Texas Department of Transportation

BOOK 2 – TECHNICAL PROVISIONS

FOR

US 181 HARBOR BRIDGE PROJECT

Design-Build Project

ATTACHMENT 13-1
STRUCTURE PROVISIONS

Item 400

1. Excavation and Backfill for Structures

1. DESCRIPTION

Excavate for placement and construction of structures and backfill structures. Cut and restore pavement.

2. MATERIALS

Use materials that meet the requirements of the following Items.

- Item 401, “Flowable Backfill”
- Item 421, “Hydraulic Cement Concrete”
- DMS-4600, “Hydraulic Cement”

3. CONSTRUCTION

3.1. Excavation.

3.1.1. **General**. Excavate to the lines and grades shown on the Design Documents. Provide slopes, benching, sheeting, bracing, pumping, and bailing as necessary to maintain the stability and safety of excavations up to 5 ft. deep. Excavation protection for excavations deeper than 5 ft. are governed by Item 402, “Trench Excavation Protection” and Item 403, “Temporary Special Shoring.” Use satisfactory excavated material as backfill or as embankment fill. Dispose of material not incorporated into the final project off the right of way in accordance with federal, State, and local regulations.

Keep any topsoil that has been removed separate, and replace it, as nearly as feasible, in its original position when excavating for installation of structures across private property or beyond the limits of the embankment. Restore the area to an acceptable condition.

Excavate drilled shafts in accordance with Item 416, “Drilled Shaft Foundations.”

3.1.1.1. **Obstructions**. Remove obstructions to the proposed construction, including trees and other vegetation, debris, and structures, over the width of the excavation to a depth of 1 ft. below the bottom of excavation. Remove as required to clear the new structure and plug in an approved manner if abandoned storm drains, sewers, or other drainage systems are encountered. Restore the bottom of the excavation to grade by backfilling after removing obstructions in accordance with this Item. Dispose of surplus materials in accordance with federal, State, and local regulations.

3.1.1.2. **Excavation in Streets**. Cut pavement and base to neat lines when structures are installed in streets, highways, or other paved areas. Restore pavement structure after completion of excavation and backfilling.

Maintain and control traffic in accordance with the approved traffic control plan and the TMUTCD.

3.1.1.3. **Utilities**. Conduct Work with minimum disturbance of existing utilities, and coordinate Work in or near utilities with the utility owners. Inform utility owners before Work begins, allowing them enough time to identify, locate, reroute, or make other adjustments to utility lines.

Avoid cutting or damaging underground utility lines that are to remain in place. Promptly notify the utility company if damage occurs. Provide temporary flumes across the excavation while open if an active sanitary sewer line is damaged during excavation, and restore the lines when backfilling has progressed to the original bedding lines of the cut sewer.

3.1.1.4. **De-Watering**. Construct or place structures in the presence of water only if approved. Place precast members, pipe, and concrete only on a dry, firm surface. Remove water by bailing, pumping, well-point installation, deep wells, underdrains, or other approved method.

Remove standing water in a manner that does not allow water movement through or alongside concrete being placed if structures are approved for placement in the presence of water. Pump or bail only from a suitable sump separated from the concrete Work while placing structural concrete or for a period of at least 36 hr. thereafter. Pump or bail during placement of seal concrete only to the extent necessary to maintain a static head of water within the cofferdam. Pump or bail to de-water inside a sealed cofferdam only after the seal has aged at least 36 hr.

Place a stabilizing material in the bottom of the excavation if the bottom of an excavation cannot be de-watered to the point the subgrade is free of mud or it is difficult to keep reinforcing steel clean. Use flexible base, cement-stabilized base or backfill, lean concrete, or other approved stabilizing material. Provide concrete with at least 275 lb. of cement per cubic yard, if lean concrete is used, and place to a minimum depth of 3 in.

3.1.2. **Bridge Foundations and Retaining Walls**. Do not disturb material below the bottom of footing grade. Do not backfill to compensate for excavation that has extended below grade. Fill the area with concrete at the time the footing is placed if excavation occurs below the proposed footing grade.

Take core samples to determine the character of the supporting materials if requested. Provide an intact sample adequate to judge the character of the founding material. Take these cores when the excavation is close to completion. Cores should be approximately 5 ft. deeper than the proposed founding grade.

Remove loose material if the founding stratum is rock or another hard material, and clean and cut it to a firm surface that is level, stepped, or serrated. Clean out soft seams, and fill with concrete at the time the footing is placed.

Place the foundation once the excavation has been inspected and authorized changes have been made to provide a uniform bearing condition if the material at the footing grade of a retaining wall, bridge bent, or pier is a mixture of compressible and incompressible material.

3.1.3. **Cofferdams**. The term “cofferdam” designates any temporary or removable structure constructed to hold surrounding earth, water, or both out of the excavation whether the structure is formed of soil, timber, steel, concrete, or a combination of these. Use pumping wells or well points for de-watering cofferdams if required.

Submit details and design calculations for sheet-pile or other types of cofferdams requiring structural members bearing the seal of a Registered Professional Engineer for review before constructing the cofferdam. TxDOT reserves the right to reject designs. Design structural systems to comply with the AASHTO *Standard Specifications for Highway Bridges* or AASHTO *LRFD Bridge Design Specifications*. Interior dimensions of cofferdams must provide enough clearance for the construction, inspection, and removal of required forms and, if necessary, enough room to allow pumping outside the forms. Extend sheet-pile cofferdams well below the bottom of the footings, and make concrete seals as well braced and watertight as practicable.

Use Class E concrete for foundation seals. Place concrete foundation seals in accordance with Item 420, "Concrete Substructures."

Make the excavation deep enough to allow for swelling of the material at the base of the excavation during pile-driving operations when it is impractical to de-water inside a cofferdam and a concrete seal is to be placed around piling driven within the cofferdam. Remove swelling material to the bottom of the seal grade after driving the piling. Remove the foundation material to exact footing grades where it is possible to de-water inside the cofferdam without placing a seal after driving piling. Do not backfill a foundation to compensate for excavation that has been extended below grade; fill such areas below grade with concrete at the time the seals or footings are placed.

Remove cofferdams after completing the substructure without disturbing or damaging the structure.

3.1.4. **Culverts and Storm Drains**. When the design requires special bedding conditions for culverts or storm drains, an excavation diagram shall be shown on the Design Documents. Do not exceed these limits of excavation.

Construct pipe structures in an open cut with vertical sides extending to a point 1 ft. above the pipe. When site conditions or the Design Documents do not prohibit sloping the cut, the excavation may be stepped or laid back to a stable slope beginning 1 ft. above the pipe. Maintain the stability of the excavation throughout the construction period.

Construct the embankment for pipe to be installed in fill above natural ground to an elevation at least 1 ft. above the top of the pipe, and then excavate for the pipe.

3.1.4.1. **Unstable Material**. Remove the material to a depth of no more than 2 ft. below the grade of the structure when unstable soil is encountered at established footing grade. Replace soil removed with stable material in uniform layers no greater than 8 in. deep (loose measurement). Each layer must have enough moisture to be compacted by rolling or tamping as required to provide a stable foundation for the structure.

Use special materials such as flexible base, cement-stabilized base, cement-stabilized backfill, or other approved material when it is not feasible to construct a stable foundation as outlined above.

3.1.4.2. **Incompressible Material**. Remove the incompressible material to 6 in. below the footing grade, backfill with an approved compressible material, and compact in accordance with Section 400.3.3., "Backfill" if rock, part rock, or other incompressible material is encountered at established footing grade while placing prefabricated Elements.

3.2. **Shaping and Bedding.** Place at least 2 in. of fine granular material for precast box sections on the base of the excavation before placing the box sections. Use bedding as shown in Figure 1 for pipe installations. Use Class C bedding. TxDOT may require the use of a template to secure reasonably accurate shaping of the foundation material. Undercut the excavation at least 4 in. where cement-stabilized backfill is indicated on the Design Documents and backfill with stabilized material to support the pipe or box at the required grade.

B_c - Outside diameter or horizontal dimension

D - Inside diameter of pipe

d - Min. bedding material below pipe

D	d
≤ 27"	3"
30" to 60"	4"
≥ 66"	6"

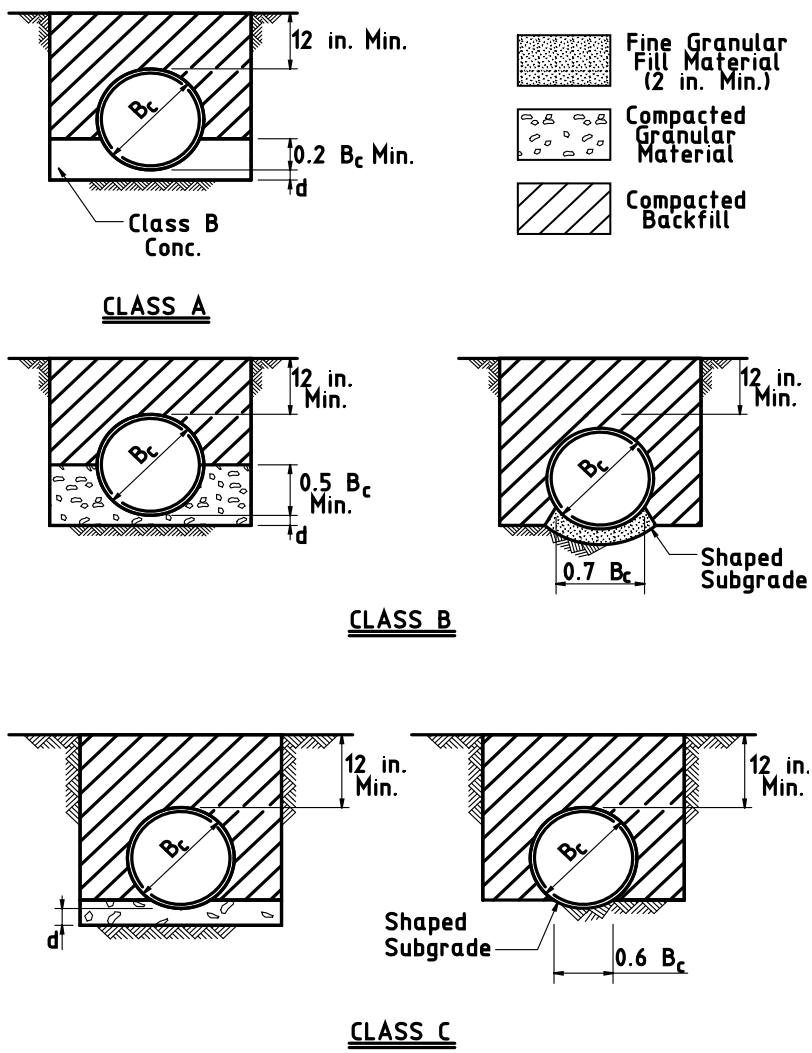

Figure 1
Bedding diagrams

3.3. **Backfill.**

3.3.1. **General**. Backfill the excavation after placement of the permanent structure as soon as practical. Use backfill free from stones large enough to interfere with compaction; large or frozen lumps that

will not break down readily under compaction; and wood or other extraneous material. Obtain backfill material from excavation or from other sources.

Place backfill in layers no greater than 10 in. deep (loose measurement) in areas not supporting a completed roadbed, retaining wall, or embankment. Place backfill in uniform layers no greater than 8 in. deep (loose measurement) in areas supporting a portion of a roadbed, retaining wall, or embankment. Compact each layer to meet the density requirements of the roadbed, retaining wall, embankment material.

Bring each layer of backfill material to the moisture content needed to obtain the required density. Use mechanical tamps or rammers to compact the backfill. Rollers may be used to compact backfill if feasible.

Cohesionless materials may be used for backfilling. Use cohesionless materials that conform to the requirements of Table 1.

Table 1

Cohesionless Material Gradation Limits

Sieve Size	Percent Retained
3 in.	0
No. 10	See Note[1]
No. 200	90-100

No. 10 sieve requirements are 0 to 30 percent retained when used as aggregate for cement-stabilized backfill.

Compact cohesionless materials using vibratory equipment, water-ponding, or a combination of both.

3.3.2. **Bridge Foundations, Retaining Walls, Manholes/Inlets and Box Culverts**. Place backfill against the structure only after the concrete has reached the design strength required in Item 421, "Hydraulic Cement Concrete."

Backfill retaining walls with material meeting the requirements of Item 423, "Retaining Walls." Backfill around bridge foundations, manholes/inlets and culverts using material with particles no more than 4 in. in greatest dimension and a gradation that permits thorough compaction. Use rock or gravel mixed with soil if the percentage of fines is enough to fill all voids and ensure a uniform and thoroughly compacted mass of proper density.

Use mechanical tamps and rammers to avoid damage to the structure where backfill material is being placed too close to the structure to permit compaction with blading and rolling equipment.

Avoid wedging action of backfill against structures. Step or serrate slopes bounding the excavation to prevent such action. Place backfill uniformly around bridge foundations. Place backfill equally and in uniform layers along both sides of manholes/inlets and culverts.

TxDOT may require backfilling of structures excavated into hard, erosion-resistant material, and subject to erosive forces, with stone or lean concrete.

Box culverts may be opened to traffic as soon as enough backfill and embankment has been placed over the top to protect culverts against damage from heavy construction equipment. Repair damage to culvert caused by construction traffic.

3.3.3. **Pipe**. Bring backfill material to the proper moisture condition after installing bedding and pipe as required and place it equally along both sides of the pipe in uniform layers no greater than 8 in. deep (loose measurement). Compact each lift mechanically. Thoroughly compact materials placed under the haunches of the pipe to prevent damage or displacement of the pipe. Place backfill in this manner to the top-of-pipe elevation. Place and compact backfill above the top of the pipe in accordance with Section 400.3.3.1., "General."

TxDOT may reject backfill material containing more than 20% by weight of material retained on a 3-in. sieve with large lumps not easily broken down or that cannot be spread in loose layers. Material excavated by a trenching machine shall generally meet the requirements of this Section as long as large stones are not present.

Place and compact additional material where pipe extends beyond the toe of slope of the embankment and the depth of cover provided by backfill to the original ground level is less than the minimum required by the specifications for the type of pipe involved until the minimum cover has been provided.

3.3.4. **Cement-Stabilized Backfill**. Backfill the excavation to the elevations shown with cement-stabilized backfill when shown on the Design Documents. Use cement-stabilized backfill that contains aggregate conforming to the gradation limits shown in Table 1, water, and a minimum of 7% hydraulic cement based on the dry weight of the aggregate, in accordance with Tex-120-E.

Place cement-stabilized backfill equally along the sides of structures to prevent strain on or displacement of the structure. Fill voids when placing cement-stabilized backfill. Use hand-operated tampers if necessary to fill voids.

3.3.5. **Flowable Backfill**. Backfill the excavation with flowable backfill to the elevations indicated when shown on the Design Documents. Prevent the structure from being displaced during the placement of the flowable fill, and prevent flowable fill from entering manholes/inlets and culverts, and drainage structures.

Item 401

2. Flowable Backfill

1. DESCRIPTION

Furnish and place flowable backfill for trench, hole, or other void.

2. MATERIALS

Use materials from prequalified sources listed on TxDOT's website. Use materials from non-listed sources only when tested and approved before use. Allow 30 Days for sampling, testing, and reporting results for non-listed sources. Do not combine approved material with unapproved material.

2.1. **Cement.** Furnish cement in accordance with DMS-4600, "Hydraulic Cement."

2.2. **Fly Ash.** Furnish fly ash in accordance with DMS-4610, "Fly Ash."

2.3. **Chemical Admixtures.** Furnish chemical admixtures in accordance with DMS-4640, "Chemical Admixtures for Concrete." Use specialty type admixtures to enhance the flowability, reduce shrinkage, and reduce segregation by maintaining solids in suspension when necessary. Use and proportion all admixtures in accordance with the manufacturer's recommendations.

2.4. **Fine Aggregate.** Provide fine aggregate that will stay in suspension in the mortar to the extent required for proper flow and that meets the gradation requirements of Table 1.

Table 1

Aggregate Gradation Chart

Sieve Size	Percent Passing
3/4 in.	100
No. 200	0–30

Test fine aggregate gradation in accordance with Tex-401-A.

Plasticity Index (PI) must not exceed 6 when tested in accordance with Tex-106-E.

2.5. **Mixing Water.** Use mixing water in accordance with Item 421, "Hydraulic Cement Concrete."

3. CONSTRUCTION

Submit a construction method and plan, including mix design, for approval. Provide a means of filling the entire void area, and be able to demonstrate this has been accomplished. Prevent the movement of any inserted structure from its designated location. Remove and replace or correct

the problem if voids are found in the fill or any of the requirements are not met as shown on the Design Documents.

Furnish a mix meeting the requirements of Table 2.

Table 2

Flowable Fill Mix Design Requirements

Property	Excavatable	Non-Excavatable	Test Method
28-Day Compressive Strength[1], psi	80 to 200	>200	ASTM D4832
Consistency[2], min. diameter, in.	8		ASTM D6103
Unit Weight, pcf	90 to 125	100 to 145	ASTM D6023
Air Content, %	10 to 30	5 to 15	ASTM D6023

Average of two specimens.

Mixture must not segregate.

Mix the flowable fill using a central-mixed concrete plant, ready-mix concrete truck, pug mill, or other approved method.

Furnish all labor, equipment, tools, containers, and molds required for sampling, making, transporting, curing, removal, and disposal of test specimens. Furnish test molds meeting the requirements of Tex-447-A. Transport, strip, and cure the test specimens as scheduled at the designated location. Cure test specimens in accordance with Tex-447-A. Dispose of used, broken specimens in an approved location and manner.

Item 403

3.Temporary Special Shoring

1. DESCRIPTION

Furnish and install temporary shoring to hold the surrounding earth, water, or both out of the Work area.

2. MATERIALS

Furnish new or used materials. Furnish materials that meet the requirements of Item 423, “Retaining Walls,” when using temporary Mechanically Stabilized Earth (MSE) walls. Furnish materials that meet the requirements of Item 410, “Soil Nails,” or Item 411, “Rock Nails,” when using temporary nailed walls (rock or soil).

3. CONSTRUCTION

Developer is responsible for the temporary special shoring design. Submit details and design calculations bearing the seal of a Registered Professional Engineer before constructing the shoring. TxDOT reserves the right to reject designs. Design the shoring to comply with OSHA Standards and Interpretations, 29 CFR 1926, Subpart P, “Excavations.” Design structural systems to comply with AASHTO *Standard Specifications for Highway Bridges* or AASHTO *LRFD Bridge Design Specifications*. Design shoring subject to railroad loading to comply with the AREMA *Manual for Railway Engineering* and any additional requirements of the railway being supported.

Provide vertical or sloped cuts, benches, shields, support systems, or other systems to provide the necessary protection in accordance with the approved design. Construct temporary MSE walls, when used, in accordance with Item 423, “Retaining Walls.” Construct temporary nailed walls (rock or soil), when used, in accordance with Item 410, “Soil Nails,” or Item 411, “Rock Nails.”

Item 404

4. Driving Piling

1. DESCRIPTION

Drive piling.

2. EQUIPMENT

2.1. **Driving Equipment.** Use power hammers for driving piling with specified bearing resistance. Use power hammers that comply with Table 1. Gravity hammers may be used for driving sheet piling if no required design load is shown on the Design Documents.

For initial rating of diesel hammers to determine compliance with the requirements of Table 1, the height of fall of the ram of the single-acting (open-end) hammer must be 7 ft. For a double-acting (enclosed ram) hammer, the energy rating must be 85% of the rated output by the manufacturer.

A hammer that produces less energy than required by Table 1 may be approved if a wave equation analysis indicates the hammer can drive the specified pile against a bearing resistance of 3 times the required design load before reaching 0.l in. of penetration per blow. The bearing resistance of the piling driven with this particular equipment shall be determined in accordance with the Wave Equation Method.

Use an air compressor that supplies the volume and pressure specified by the manufacturer of the hammer. Provide an accurate pressure gauge.

Maintain the valve mechanism and other parts of power hammers so the hammer will operate at the speed and stroke length specified by the manufacturer.

Equip enclosed ram diesel hammers with a gauge and provide charts to evaluate the equivalent energy being produced. Calibrate the gauge before Work begins, whenever gauge accuracy is in question, and at least once each 6 months.

Provide an electronic stroke indicator and blow count logging device.

Table 1

Size of Driving Equipment

Piling Type	Hammer Type	Ram Weight (lb.)	Maximum Ram Stroke (ft.)	Minimum Hammer Energy (ft.-lb.)[1]
Steel	Air, Hydraulic	3,000 min.	5	Larger of 250R or 2-1/2 Wp
	Diesel	2,000 min.	10	Larger of 250R or 2-1/2 Wp
Concrete	Air, Hydraulic	3,000 min., but not less than 1/4 Wp	5	250R, but not less than 1 ft.-lb. per lb. of pile weight

Piling Type	Hammer Type	Ram Weight (lb.)	Maximum Ram Stroke (ft.)	Minimum Hammer Energy (ft.-lb.)[1]
	Diesel	2,700 min., but not less than 1/4 Wp	8[2]	250R, but not less than 1 ft.-lb. per lb. of pile weight

R = Design load in tons. Wp = Weight of pile in pounds based on plan length.

Diesel hammers with less ram weight or greater ram stroke are permitted if a wave equation analysis indicates the combination of ram weight, stroke, and cushioning will not overstress the piling.

Provide hammer cushion consisting of layers of micarta and aluminum or other material specifically produced and approved for this application..

Regulate the height of fall when using gravity hammers to avoid damage to the piling.

Drive all test piling in a structure or in any approved segment of it with the same hammer, and use the same type and size hammer to drive the remainder of the piling in the structure or segment.

Equip pile drivers with leads constructed to allow freedom of movement of the hammer and to provide adequate support to the pile during driving. The longitudinal axis of the leads, hammer, and pile should coincide.

Ensure leads are long enough, except where piling is driven through water, that a follower will not be necessary. Use 1 pile in each 10 that is long enough to permit driving without a follower when driving piling underwater and a follower is required. Drive it as a test pile for proper correlation of the follower-driven piling.

Hammers designed to operate underwater may be used for underwater driving without a follower and without the correlation required for other hammers.

2.2. **Protection of Pile Heads.** Use a steel driving head (helmet) suitable for the type and size of piling. Drive steel H-piling and sheet piling with a helmet compatible with the specific pile shape driven.

Provide a cushion block for concrete piling between the driving head and the top of the pile. Use a cushion block that is a minimum of 4 in. thick for short piling (50 ft. or less) and at least 6 in. thick for longer piling. Use multiple layers of one of the following:

3/4-in. or 1-in. structural grade southern pine or fir plywood;
green oak or gum, with the grain of the wood horizontal; or
other approved material specifically produced for this application.

Pay special attention to the condition of the cushioning material. Drive no more than 3 piles with one cushion block. Change cushioning more frequently if necessary to prevent damage. Immediately replace any cushion block that has ignited. Do not use a tight-fitting driving helmet for concrete piling. Allow room for slight movement, but ensure the driving helmet is not large enough for the pile head to rotate freely. Center concrete piling and cushion within the helmet throughout the driving operation.

3. CONSTRUCTION

This Item uses the following terms:

- **Foundation Piling**. Piling placed under interior bent footings or retaining wall abutment footings.
- **Trestle Piling**. Piling embedded directly into the abutment cap or interior bent cap.
- **Sheet Piling**. Retaining piling not considered either foundation or trestle piling.
- **Test Piling**. Specific piling driven to investigate site conditions and determine regular piling lengths.
- **Test-Loaded Piling**. Specific piling driven and test-loaded to investigate site conditions and determine regular piling lengths. Do not fabricate regular piling until test loading and analysis is completed.
- **Regular Piling**. All piling other than test piling and test-loaded piling.

Do not fabricate regular piling until test pile-driving and analysis or test loading and analysis is completed.

Complete the embankment at bridge ends before driving abutment piling. Refer to Item 423, "Retaining Walls," for provisions on piling that passes through the structural volume of retaining walls.

Do not drive foundation piling until the footing excavation is complete. Drive concrete piling once the piling concrete, including build-ups, has aged at least 14 Days. Do not drive piling in a saltwater environment until the piling concrete, including build-ups, has aged at least 21 Days after concrete placement.

Re-drive any piling that is raised when driving adjacent piling. Withdraw and replace any broken, split, or displaced piling, or correct it after a design analysis.

To control excessive stresses resulting in damage to the piling during driving, the following, alone or in combination, may be required:

increase in cushion thickness,
reduction of ram stroke,
heavier ram with a shorter stroke,
use of pilot holes or jetting when driving through hard or alternating hard and soft strata.

3.1. **Tolerance for Driving.** Drive piling to the required vertical or batter alignment, within the tolerances of this Section. Drive piling in pilot holes or with templates when necessary to comply with tolerances. Cut off piling reasonably square at the elevation shown on the Design Documents, with a tolerance of no more than 2 in. above or below established cutoff grade. Submit for approval a structural analysis and proposed corrective action, signed and sealed by a Registered Professional Engineer when tolerances are exceeded.

3.1.1. **Trestle Piling**.

- Transverse to the centerline of the bent, the top of the piling may be no more than 2 in. from the position shown on the Design Documents.
- Parallel to the centerline of the bent, the top of the piling may be no more than 4 in. from the position shown on the Design Documents.

3.1.2. **Foundation Piling**.

- The top of each pile may be no more than 4 in. in any direction from the position shown on the Design Documents.
- The center of gravity of the piling group may be no more than 3 in. from the center of gravity determined from plan location.
- The minimum edge distance for piling in a footing is 5 in.

3.2. **Penetration.** Piling lengths shown on the Design Documents are the lengths estimated to give required bearing and for estimating purposes only. Drive piling to plan tip elevations or to greater depths as necessary to obtain the required bearing resistance shown on the Design Documents.

Establish regular pile lengths on the basis of the test data when test piling or test-loaded piling is used. Drive regular piling to this approximate elevation in these cases and to greater depths as required to obtain the required bearing resistance.

Provide either pilot holes, jetting, or a combination of both for unusually hard driving conditions, typically less than 0.1 in. of penetration per blow if plan penetration is not obtained. Reduce penetration upon approval when the piling is advanced to within 5 ft. of plan length unless other penetration requirements or bearing evaluation methods govern.

3.3. **Pilot Holes.** Extend pilot holes no more than 5 ft. below the bottom of footings for foundation piling or 10 ft. below finished ground line for trestle piling. Determine the size and depth of pilot holes from the results of trial operations on the first piling driven or from available test pile data when deeper ones are required. Obtain approval for any excess depth or size of pilot holes. The maximum hole diameter permitted shall be approximately 4 in. less than the diagonal of square piling or steel H-piling and 1 in. less than the diameter of round piling.

Extend pilot holes through all embankments to natural ground when driving concrete piling.

Where a pilot hole is required in granular material that cannot be sealed off by ordinary drilling methods, a casing may be required around the boring device deep enough to prevent loose material from falling into the pilot hole.

Drive the piling below the depth of the pilot hole a minimum of 1 ft. or 100 blows, but not less than the required bearing resistance shown on the Design Documents. Do not drive piling beyond the point where the penetration per blow is less than 0.1 in. as determined by an average of 10 blows. Stop driving if damage to the pile is apparent.

3.4. **Jetting.** Jetting is permitted when the specified penetration cannot be obtained by driving and pilot holes or other methods are not feasible. Submit details of the proposed methods for approval before jetting.

Jet as required in conjunction with driving but only to the approved depth. Use enough power for jetting operations to simultaneously operate at least two 2-1/2 in. diameter pipes equipped with 3/4-in. nozzles at a pressure of 150 psi. Perform the jetting with 1 or 2 jets as determined and approved from results of trial operations.

Drive the piling below the depth of the jetting a minimum of 1 ft. or 100 blows, but not less than the required bearing resistance shown on the Design Documents. Do not drive piling beyond the point where the penetration per blow is less than 0.1 in. as determined by an average of 10 blows. Stop driving if damage to the pile is apparent.

3.5. **Hammer Formula Method of Bearing Evaluation.** Determine the dynamic bearing resistance of piling by one of the hammer formulas in this Section. If a K factor has been determined based on test piling, test-loaded piling, or other methods, the computed resistance shall be the driving resistance determined based on the appropriate formula multiplied by the K factor.

3.5.1. **Single-Acting Power Hammers**. Use the following formula:

$$P = \frac{2WH}{S + 0.1}$$

where:
P = dynamic resistance in pounds
W = weight of ram in pounds
H = height of fall of ram in feet (field measured)
S = average penetration in inches per blow for the last 20 blows

Determine *H* by an approved electronic stroke indicator and blow count logging device provided by Developer. Pending approval, H can be determined by visual observation of the ram against a calibrated rod mounted on the hammer or by the following formula:

$$H = 16.1 \times \left(\frac{30}{B}\right)^2 - 0.3$$

where *B* = blows per minute

3.5.2. **Double-Acting Power Hammers**. Use the following formula:

$$P = \frac{2E}{S + 0.1}$$

where:
P = dynamic resistance in pounds
E = manufacturer's rated energy in foot-pounds (for double-acting power hammers), or the equivalent energy in foot-pounds determined by a calibrated gauge attached to the hammer and taken when the average penetration in inches per blow is determined (for enclosed ram diesel hammer)
S = average penetration in inches per blow for the last 20 blows

3.5.3. **Other Hammer Types.** Provide a wave equation analysis for each pile, hammer, soil, and load combination for which the driving system is to be used. The analysis shall determine the bearing capacity of the piling.

3.6. **Wave Equation Method of Bearing Evaluation.** Submit the following data when Design Documents specify the bearing capacity of the piling be determined by the wave equation method:

- manufacturer's specification data for the hammer proposed for use, including all modifications and
- complete description and dimensions of all cushioning material used between the pile and helmet and in the cap block, including total thickness of each, and the direction of grain if wood is used.

These data are used to determine the required number of blows per unit of penetration the hammer must deliver to obtain the required bearing resistance.

After evaluation by the wave equation method, any change in the driving equipment may require re-evaluation. Such changes must be approved before further driving.

3.7. **Test Piling.** Drive test piling at locations shown on the Design Documents. Make test piling part of the completed Work, cut off or built up to grade as necessary. Use the required bearing evaluation method to determine bearing resistance.

Initially drive test piling to 3 ft. above plan tip elevation of the regular piling for the structure with the blow count recorded for each foot of driving (for example, drive test piling to 13 ft. above its plan tip elevation if the test piling is 10 ft. longer than regular piling). Retain the cushion if used.

Re-drive the test piling the additional length required by the Design Documents at least 7 Days after the original driving with the same hammer and cushion originally used. Record the blow count for each inch of driving for the first foot, for every 3 in. for the next 2 ft., and for each foot thereafter.

Use the data to determine regular piling lengths and K factors. The K factor shall be determined based on the following formula:

$$K = P_R / P$$

where:
K = a static correction factor applied to the evaluation method
P_R = re-drive bearing (tons) of the test pile determined by the evaluation method
P = original bearing (tons) of test pile determined by the evaluation method

3.8. **Test-Loaded Piling.** Conduct test load in accordance with Item 405, “Foundation Test Load.”

Use the data in determining regular piling lengths and K factors. The K factor shall be determined based on the following formula:

$$K = L / P$$

where:
K = a static correction factor applied to the evaluation method
L = maximum safe static load proven by test load
P = bearing resistance of the test-loaded pile determined by the evaluation method

Item 405

5.Foundation Load Test

1. DESCRIPTION

Load-test piling or drilled shafts.

2. MATERIALS

Provide piling or drilled shafts for test loading as shown on the Design Documents.

3. EQUIPMENT

Furnish all necessary tools and equipment required to perform the foundation load test.

4. CONSTRUCTION

Furnish and drive the piling in accordance with Item 404, “Driving Piling,” or construct the shaft in accordance with Item 416, “Drilled Shaft Foundations,” to be test-loaded. Use the same procedure for drilling the test shaft as for the shafts required in the structure.

Keep a complete record of pile-driving data and shaft-drilling data for all foundations used in the test load. Apply the test load no earlier than the seventh Day after driving the test piling or after placing concrete in the test shaft. Load the test shaft only after the concrete design strength has been attained.

Perform the foundation load test as stated on the Design Documents and in accordance with the following:

- ASTM D1143
- ASTM D4945
- ASTM D7383

Dismantle the test setup after completing the test if applicable.

Remove piling or shafts that are not part of the structure upon completion of the test load, or cut off at least 1 ft. below the bottom of the footing or the finished grade. Re-drive permanent piling to its original grade and bearing if it is raised during the test load.

Item 407

6.Steel Piling

1. DESCRIPTION

Furnish and place steel H-piling, pipe piling, and sheet piling.

2. MATERIALS

Furnish steel H-piling, pipe piling, and steel sheet piling in accordance with Item 441, “Steel Structures,” and details shown on the Design Documents.

Furnish steel that meets ASTM A690 or ASTM A572 Grade 50 for H-piling. Furnish steel that meets ASTM A 572 Grade 50 for pipe piling. Furnish steel that meets ASTM A328, ASTM A690, or ASTM A572 Grade 50 for hot-rolled sheet piling. Furnish steel that meets ASTM A690 or ASTM A572 Grade 50 for cold-rolled sheet piling. Steel sheet piling may be substituted with a section modulus and minimum thickness of material equal to or greater than that of the section specified. If a hot-rolled section is specified, the substitute section must also be hot-rolled.

Furnish piling in the lengths indicated on the Design Documents.

The H-piling or pipe piling may be fabricated by welding together up to 3 sections of piling with a minimum section length of 5 ft.

Shop-paint piling with 3.0 mils minimum Dry Film Thickness (DFT) inorganic zinc primer in accordance with the System III or IV paint protection system specified in Item 441, “Steel Structures.” Apply appearance or intermediate coatings only if specified on the Design Documents. Apply a marine-grade immersion coating system recommended by the manufacturer for marine, immersion service, and meeting the requirements of NORSOK Standard M-501, Coating System No. 7 for piling in marine environments. Submit a manufacturer’s certification that states the material meets the requirements of NORSOK Standard M-501, Coating System No. 7. Submit product data sheets and obtain approval of paint system before performing the Work. Paint the portion of the pile to be above finished grade or dredge line, in water, and a minimum distance of 10 ft. below finished grade or dredge line. Spot clean and paint damaged areas in the field to obtain a minimum of 3 mils DFT for inorganic zinc primer or a minimum of 15 mils DFT for the marine-grade immersion coating system. Spot clean and paint in accordance with Item 446, “Cleaning and Painting Steel.”

Reinforce steel H-pile tips when the piling is to be driven into rock, shale, or other material of similar hardness. Use the pile tip reinforcement detail shown on Common Foundation Details (FD) Standard or attach prefabricated pile points manufactured from ASTM A27 Grade 65-35 or ASTM A148 Grade 80-50 material. Furnish certification materials conforming to this requirement. Submit construction drawings for approval when alternate pile tip reinforcements are proposed.

Reinforce steel pipe piling and steel sheet piling tip when piling is to be driven into rock, shale, or other material of similar hardness. Use prefabricated pipe piling or sheet piling tip

reinforcements manufactured from ASTM A27 Grade 65-35 or ASTM A148 Grade 80-50 material. Submit construction drawings for approval when alternate pipe piling or sheet piling tip reinforcements are proposed.

Store piling above ground on adequate blocking. Keep piling clean and fully drained at all times during storage.

3. CONSTRUCTION

Drive piling in accordance with Item 404, "Driving Piling." Test load, when required, in accordance with Item 405, "Foundation Load Test."

3.1. **Splices and Cutoffs.** Make all splices for steel H-piling in accordance with detail on Common Foundation Details (FD) Standard. Submit pipe piling and sheet piling splicing locations and details of Record for approval. Drive spliced piling the additional depth required as soon as the splice is completed if the required penetration or bearing resistance has not been obtained.

Cut piling off square at plan grade or to the established grade after driving it to the approximate penetration and bearing resistance required. Cut off the damaged portion if the head of the pile is appreciably distorted or otherwise damaged below cutoff level, and splice an undamaged section in its place.

Weld in accordance with Item 448, "Structural Field Welding."

3.2. **Painting.** Apply paint in accordance with Item 446, "Cleaning and Painting Steel." Clean and paint damaged areas, field splices, or areas missing the shop coat with enough epoxy zinc primer to bring the total zinc primer to the minimum 3.0 mils DFT after driving piling. Apply at least 2.0 mils DFT each of the System III epoxy intermediate coating and appearance coating when a polyurethane appearance coating is specified on the Design Documents. Apply at least 2.0 mils DFT of the System IV appearance coating when an acrylic latex appearance coating is specified on the Design Documents. Use a concrete gray appearance coating. Extend the paint 1 ft. below finished ground line unless the piling is standing in water, in which case extend the paint to the low water line. Replace any earth removed for this painting after the paint has dried.

3.3. **Test Piling.** Test piling must meet requirements for steel piling.

Item 409

7. Prestressed Concrete Piling

1. DESCRIPTION

Furnish and place prestressed concrete piling.

2. MATERIALS

Use materials that meet the requirements of the following Items.

- Item 420, "Concrete Substructures"
- Item 421, "Hydraulic Cement Concrete"
- Item 425, "Precast Prestressed Concrete Structural Members"
- Item 440, "Reinforcement for Concrete"

Fabricate prestressed concrete piling in accordance with the following Items.

- Item 424, "Precast Concrete Structural Members (Fabrication)"
- Item 425, "Precast Prestressed Concrete Structural Members"

Furnish piling in the lengths indicated on the Design Documents when test or test-loaded piling is not required.

3. CONSTRUCTION

Handle and store piling in a way that minimizes the risk of damage by impact or bending stress. Store piling above ground on adequate blocking. Do not use chain slings to handle piling. Immediately review and correct conditions causing the damage to any piling. Drive piling in accordance with Item 404, "Driving Piling." Test-load, when required, in accordance with Item 405, "Foundation Load Test."

3.1. **Defects and Breakage.** Damage to piling due to faulty materials or construction methods may be cause for rejection. Piling damaged in the process of fabrication, handling, storing, hauling, or driving is subject to the acceptance criteria and repair provisions set forth in the **TxDOT** *Concrete Repair Manual*.

3.2. **Buildups and Cutoffs.** Construct buildups in accordance with plan details and Item 420, "Concrete Substructures." Make the final cut of the concrete square to the longitudinal axis for cutoffs.

3.3. **Test Piling.** Test piling must meet requirements for prestressed concrete piling.

Item 410

8.Soil Nail Anchors

1. DESCRIPTION

Construct reinforced soil nail anchors.

2. MATERIALS

Provide materials conforming to the following requirements.

2.1. **Hydraulic Cement Concrete.** Use materials that meet the requirements of Item 421, "Hydraulic Cement Concrete." Provide a neat cement or sand-cement mixture for the grout for soil nail anchors with a 7-Day compressive strength of 3,000 psi. Determine grout strength by testing the grout used for the test soil nail anchors in cubes in accordance with Tex-307-D or cylinders in accordance with Tex-418-A. Test further if the grout mixture is modified. Fly ash may be included in the grout.

Do not use grout mixed in a mobile continuous volumetric mixer.

Provide a grout mix with a minimum water-cement ratio of 0.4 and a minimum specific gravity of 1.85. Test for specific gravity in accordance with Tex-130-E.

When a sand sand-cement mixture is used for grouting soil nail anchors, provide a grout mixture with a minimum slump flow of 20 in. . Test the slump flow of the grout in accordance with ASTM C1611.

The need for stiffer grout may arise when the hollow-stem auger drilling method is used or it is desired to control leakage of grout into highly permeable granular soils or highly fractured rock. In these instances, TxDOT may waive the requirements of slump flow testing.

2.2. **Pneumatically Placed Concrete.** Use materials that meet the requirements of Class II concrete in Item 431, "Pneumatically Placed Concrete."

2.3. **Reinforcing Steel.** Use materials that meet the requirements of Item 440, "Reinforcement for Concrete." Provide epoxy coated reinforcing steel bar of the size and grade shown on the Design Documents for permanent walls. The minimum allowable epoxy coating thickness is 12 mils.

2.4. **Bar Couplers.** Provide bar couplers that develop the full nominal tensile capacity of the soil nail bars, as certified by the manufacturer.

2.5. **Nail Centralizers.** Provide expanded slit PVC centralizers with a minimum diameter of 1 in. less than the nail-hole. Wheel type centralizers are not allowed.

3. EQUIPMENT

Furnish suitable equipment to drill the holes to the specified diameter, depth, and line. Provide a drill rig with an articulating head in the vertical plane and continuous flight augers. If an auger becomes worn to the degree that the drilled hole is less than the required diameter, remove the auger from Return the auger to service once it is repaired and can provide a hole of at least the required diameter.

Furnish a hydraulic jack and reaction frame for stressing the test anchors. Furnish a pressure gauge for the jack that is graduated in 75 psi increments or less. Furnish a minimum of 2 dial gauges capable of measuring to 0.001 in. Calibrate the hydraulic jack and ram used together as a system, and furnish certified copies of load calibration curves for all jacks and ram systems to be used in the Work. Calibrate the jack and ram as a unit no more than 6 mo. before starting Work. Recalibrate stressing systems when directed or at least every 6 mo.

Furnish a grout mixer and pump of sufficient capacity to place grout properly in the required quantities.

4. CONSTRUCTION

4.1. **Soil Nail Wall Construction Plan.** Submit a soil nail wall construction plan at least 30 Days before beginning construction. Begin soil nail wall construction once the construction plan submittal is accepted. Provide detailed Project specific information in the soil nail wall construction plan that includes the following:

- Project start date, an overall description, and sequence of soil nail wall construction;
- List and sizes of excavation equipment, drill rigs (must have an articulating head in a vertical plane), cutting head (auger, rock bit, etc.), tools, tremies, and grouting equipment;
- Procedures for the sequence for the following items of Work: excavations; drilling and grouting; soil nail and wall drainage system installation; and, if appropriate, facing construction;
- Details of pneumatically placed concrete equipment and application including mix process, shooting methods, and means for determining the thickness of the concrete applied;
- A nozzleman who is certified as an American Concrete Institute (ACI) Shotcrete Nozzelman;
- Plan and methods for nail testing, both the verification tests and proof tests, with calibration certificates dated within 5 mo. of the submittal date; and
- Other information shown on the Design Documents or requested by TxDOT.

4.2. **Drilling.** Drill the hole so that its diameter is not smaller than the diameter shown on the Design Documents or established by test soil nail anchors. Control hole alignment so that it varies no more than 5 degrees from the line specified on the Design Documents. Furnish suitable drilling equipment and use methods suitable for the ground conditions. The use of drilling mud or other fluids to remove cuttings is not allowed.

4.3. **Grouting.** Place the soil nail anchor with centralizers that are spaced no more than 8 ft. apart in the hole. Set the centralizers to position the soil nail reinforcing bar within 1 in. of the center of the hole. To grout, advance the grouting pipe to the bottom of the hole, and leave it there until the hole is filled with grout and enough unsegregated grout is expelled at the top of the hole. Withdraw the pipe slowly while grouting continues, filling the void left by the grout pipe. Grout each nail within

8 hr. of the completion of drilling. Holes open longer than 8 hr. shall be rejected and backfilled with grout.

Grouting before insertion of the epoxy coated bar into the hole is only allowed with approval. Advance the grout pipe to the bottom of the hole and leave it there until the hole is filled with grout and enough unsegregated grout is expelled at the top of the hole if approved. Withdraw the pipe slowly while grouting continues, filling the void left by the grout pipe. Insert the epoxy coated bar with the centralizers attached and fill any void that is left from the insertion of the bar. Fill the hole completely to face of the cut.

If caving or sloughing of the hole occurs that prevents open-hole grouting, furnish either hollow-stem auger equipment, placing the nail reinforcing bar and grout through the auger, or casing to support the sides of the excavation Use grouting methods that result in complete filling of the hole at the ground surface. Methods may include placement of grout in multiple stages or other approved methods. Completely remove any device used to dam the front of the hole immediately after the grout takes an initial set.

Record the following information concerning the grouting:

- Type of mixer
- Water-cement ratio
- Types of additives
- Type of cement
- Volume of grout

4.4. **Soil Nail Anchor Test.**

4.4.1. **Verification Tests**. Construct and test the soil nail anchors as indicated on the Design Documents. Test the soil nail anchors before installing any production soil nail anchors. Do not use verification test nails as production soil nail anchors.

Provide an adequate reaction pad large enough to resist the required load without sinking into the soil or shifting laterally during the test. Do not use a reaction pad that sinks into the soil more than 2 in. or that allows the free end of the soil nail reinforcing bar to move laterally more than 2 in. Failure to provide an adequate reaction pad will void the soil nail anchor test. Provide additional test soil nail anchors until an adequate reaction system is achieved. Furnish additional test soil nail anchors, required due to inadequate reaction pads.

Provide a reaction pad with a center opening larger than the hole diameter to ensure that no bridging or interaction occurs between the grout column and the reaction pad. Similarly, remove all pneumatically placed concrete, excess grout, or other foreign material to expose the full face of the grout column. Ensure the reaction system does not contact or interfere with the soil nail anchor reinforcing bar during the test. Conduct the following testing method:

- Apply test loads to soil nail anchors in increments of approximately 10% of the required test load stated on the Design Documents.. Hold each load increment long enough to obtain the gauge readings and to ensure that the readings have stabilized. Hold the final maximum test load for 10 min.
- Perform initial tensioning to take the slack out of the testing apparatus at 5% of the required test load.

- Provide gauges that extend and retract freely and move smoothly throughout their range. Provide a rigid and secure system to support the gauge independently of the jack or reaction system.
- Verification Test Nail Acceptance Criteria:
  - The total creep movement is less than 0.04 in. during the final 10 min. reading increment. If movement exceeds this value, an additional hold period of 60 min. with a maximum 0.08 in. total creep movement including the movement from the original 10 min. hold is required.
  - The total measured movement at the maximum test load exceeds 80% of the theoretical elastic elongation of the unbonded length of the test nail.
  - A pullout limit state does not occur for the verification load listed on the Design Documents. Pullout limit state is definined at a load level at which the test load cannot be further increased while there is continued movement of the test nail.

Modify construction methods or procedures in the event that the test soil nail anchors fail to provide the minimum pullout capacity specified on the Design Documents. Install and test additional soil nail test anchors until adequate pullout capacity is achieved. Test soil nail anchors, in addition to the number specified on the Design Documents, are subsidiary to this Item.

Install additional soil nail test anchors following the modified construction procedures and test additional soil nail test anchors if Developer chooses to modify construction procedures after test soil nail anchors are completed and approved. This additional testing is subsidiary to this Item.

4.4.2. **Proof Tests**. Conduct Proof Testing of production nails when shown on the Design Documents. The number, length, and target load of nail(s) to be proof loaded must be satisfied and tested according to the following criteria:

- TxDOT will determine the locations of each proof test nail. Completely grout the proof test nails. Proof testing may occur before the placement of pneumatically placed concrete for the temporary face. Leave a sufficiently voided region around the nail head to allow free nail movement if proof testing is to occur after the placement of pneumatically placed concrete for the temporary facing. Provide a minimum 2 in. clear zone around the grouted nail.
- Use a reaction system as outlined in Verification Tests.
- Follow proof nail loading sequence outlined for VerificationTests, except use the required proof load stated on the Design Documents.
- Proof Test Nail Acceptance Criteria:
  - The total creep movement is less than 0.04 in. during the final 10 min. reading increment. If movement exceeds this value, an additional hold period of up to 60 min. with a maximum 0.08 in. total creep movement including the movement from the original 10 min. hold is required.
  - The total measured movement at the maximum test load exceeds 80% of the theoretical elastic elongation of the unbonded length of the test nail.
  - A pullout limit state does not occur for the proof load listed on the Design Documents. Pullout limit state is definined at a load level at which the test load cannot be further increased while there is continued movement of the test nail.

- If the proof test nails fail, Developer is responsible for redesigning the wall with supplemental soil nail anchors.

Item 411

9. Rock Nail Anchors

1. DESCRIPTION

Construct reinforced rock nail anchors.

2. MATERIALS

Provide materials conforming to the following requirements.

2.1. **Hydraulic Cement Concrete.** Use materials that meet the requirements of Item 421, "Hydraulic Cement Concrete." Provide a neat cement or sand-cement mixture for the grout for rock nail anchors with a 7-Day compressive strength of 3,000 psi. Determine grout strength by testing the grout used for the test rock nail anchors in cubes in accordance with Tex-307-D or cylinders in accordance with Tex-418-A. Test further if the grout mixture is modified. Fly ash may be included in the grout.

Do not use grout mixed in a mobile continuous volumetric mixer.

Provide a grout mix with a minimum water-cement ratio of 0.4 and a minimum specific gravity of 1.85. Test for specific gravity in accordance with Tex-130-E.

When a sand cement mixture is used for grouting rock nail anchors, provide a grout mixture with a minimum slump flow of 20 in.. Test the slump flow of the grout in accordance with ASTM C1611.

The need for stiffer grout may arise when it is desired to control leakage of grout into highly permeable or fractured rock. In these instances, TxDOT may waive the requirements of slump flow testing.

2.2. **Pneumatically Placed Concrete.** Use materials that meet the requirements of Class II concrete in Item 431, "Pneumatically Placed Concrete."

2.3. **Reinforcing Steel.** Use materials that meet the requirements of Item 440, "Reinforcement for Concrete." Provide epoxy coated reinforcing steel bar of the size and grade shown on the Design Documents for permanent walls. The minimum allowable epoxy coating thickness is 12 mils.

2.4. **Bar Couplers.** Provide bar couplers that develop the full nominal tensile capacity of the rock nail bars, as certified by the manufacturer.

2.5. **Nail Centralizers.** Provide expanded slit PVC centralizers with a minimum diameter of 1 in. less than the nail-hole. Wheel type centralizers are not allowed.

3. EQUIPMENT

Furnish suitable equipment to drill the holes to the specified diameter, depth, and line. Provide a drill rig with an articulating head in the vertical plane and continuous flight augers.

If the auger becomes worn to the degree that the drilled hole is less than the required diameter, remove the auger from service until it is repaired and can provide a hole of at least the required diameter.

Furnish a hydraulic jack and reaction frame for stressing the test anchors. Furnish a pressure gauge for the jack that is graduated in 75 psi increments or less. Furnish a minimum of 2 dial gauges capable of measuring to the 0.001 in. Calibrate the hydraulic jack and ram used together as a system, and furnish certified copies of load calibration curves for all jacks and ram systems to be used in the Work. Calibrate the jack and ram as a unit no more than 6 months before starting Work. Recalibrate stressing systems when directed or at least every 6 months.

Furnish a grout mixer and pump of sufficient capacity to place grout properly in the required quantities.

4. CONSTRUCTION

4.1. **Rock Nail Wall Construction Plan.** Submit a rock nail wall construction plan at least 30 Days before beginning construction. Begin rock nail wall construction once the construction plan submittal is accepted. Provide detailed Project specific information in the rock nail wall construction plan that includes the following:

- Project start date, an overall description, and sequence of rock nail wall construction;
- List and sizes of excavation equipment, drill rigs (must have an articulating head in a vertical plane),cutting head (auger, rock bit, etc.), tools, tremies, and grouting equipment;
- Procedures for the sequence for the following items of Work: excavations; drilling and grouting; rock nail and wall drainage system installation; and, if appropriate, facing construction;
- Details of pneumatically placed concrete equipment and application including mix process, shooting methods, and means for determining the thickness of the concrete applied;
- A nozzleman that is certified as an American Concrete Institute (ACI) Shotcrete Nozzelman;
- Plan and methods for rock nail testing, both the verification tests and proof tests, with calibration certificates dated within 5 months of the submittal date; and
- Other information shown on the Design Documents or requested by TxDOT.

4.2. **Drilling.** Drill the hole so that its diameter is not smaller than the diameter shown on the Design Documents or established by test rock nail anchors. Control hole alignment so that it varies no more than 5 degrees from the line specified on the Design Documents. Furnish suitable drilling equipment and use methods suitable for the ground conditions. The use of drilling mud or other fluids to remove cuttings is not allowed.

4.3. **Grouting.** Place the rock nail anchor with centralizers that are spaced no more than 8 ft. apart in the hole. Set the centralizers to position the rock nail reinforcing bar within 1 in. of the center of the hole. To grout, advance the grouting pipe to the bottom of the hole, and leave it there until the hole is filled with grout and enough unsegregated grout is expelled at the top of the

hole. Withdraw the pipe slowly while grouting continues, filling the void left by the grout pipe. Grout each nail within 8 hr. of the completion of drilling. Holes open longer than 8 hours shall be rejected and backfilled with grout.

Grouting before insertion of the epoxy coated bar into the hole is only allowed with approval. Advance the grout pipe to the bottom of the hole and leave it there until the hole is filled enough unsegregated grout is expelled at the top of the hole if approved. Withdraw the pipe slowly while grouting continues, filling the void left by the grout pipe. Insert the epoxy coated bar with the centralizers attached and fill any void that is left from the insertion of the bar. Fill the hole completely to face of the cut.

If caving or sloughing of the hole occurs that prevents open-hole grouting, furnish either hollow-stem auger equipment, placing the nail reinforcing bar and grout through the auger, or casing to support the sides. Use grouting methods that result in complete filling of the hole at the ground surface. Methods may include placement of grout in multiple stages or other approved methods. Completely remove any device used to dam the front of the hole immediately after the grout takes an initial set.

Record the following information concerning the grouting:

- Type of mixer
- Water-cement ratio
- Types of additives
- Type of cement
- Volume of grout

4.4. **Rock Nail Anchor Test.**

4.4.1. **Verification Tests**. Construct and test the rock nail anchors as indicated on the Design Documents. Test the rock nail anchors before installing any production rock nail anchors. Do not use verification test nails as production rock nail anchors.

Provide an adequate reaction pad large enough to resist the required load without sinking into the rock or shifting laterally during the test. Do not use a reaction pad that sinks into the rock more than 2 in. or that allows the free end of the rock nail reinforcing bar to move laterally more than 2 in. Failure to provide an adequate reaction pad shall void the rock nail anchor test. Provide additional test rock nail anchors until an adequate reaction system is achieved. Furnish additional test rock nail anchors, required due to inadequate reaction pads.

Provide a reaction pad with a center opening larger than the hole diameter to ensure that no bridging or interaction occurs between the grout column and the reaction pad. Similarly, remove all pneumatically placed concrete, excess grout, or other foreign material to expose the full face of the grout column. Ensure the reaction system does not contact or interfere with the rock nail anchor reinforcing bar during the test. Conduct the following testing method:

- Apply test loads to rock nail anchors in increments of approximately 10% of the required test load stated on the Design Documents. Hold each load increment long enough to obtain the gauge readings and ensure that the readings have stabilized. Hold the final maximum test load for 10 min.
- Perform initial tensioning to take the slack out of the testing apparatus at 5% of the required test load.

- Provide gauges that extend, retract freely, and move smoothly throughout their range. Provide a rigid and secure system to support the gauge independently of the jack or reaction system.
- Verification Test Nail Acceptance Criteria:
  - The total creep movement is less than 0.04 in. during the final 10 min. reading increment. If movement exceeds this value, an additional hold period of up to 60 min. with a maximum 0.08 in. total creep movement including the movement from the original 10 min. hold is required.
  - The total measured movement at the maximum test load exceeds 80% of the theoretical elastic elongation of the unbonded length of the test nail.
  - A pullout limit state does not occur for the verification load listed on the Design Documents. Pullout limit state is definined at a load level at which the test load cannot be further increased while there is continued movement of the test nail.

Modify construction methods or procedures in the event that the test rock nail anchors fail to provide the minimum pullout capacity specified on the Design Documents. Install and test additional rock nail test anchors until adequate pullout capacity is achieved. Test rock nail anchors, in addition to the number specified on the Design Documents, are subsidiary to this Item.

Install additional rock nail test anchors following the modified construction procedures and test additional rock nail test anchors if Developer chooses to modify construction procedures after test rock nail anchors are completed and approved. This additional testing is subsidiary to this Item.

4.4.2. **Proof Tests**. Conduct Proof Testing of production rock nails when shown on the Design Documents. The number, length, and target load of nails to be proof loaded must be satisfied and tested according to the following criteria:

- TxDOT will determine the locations of each proof test nail. Completely grout the proof test nails. Proof testing may occur before the placement of pneumatically placed concrete for the temporary face. Leave a sufficiently voided region around the nail head to allow free nail movement if proof testing is to occur after the placement of pneumatically placed concrete for the temporary facing. A minimum of 2 in. clear around the grouted nail is required.
- Use a reaction system as outlined in the Verification Tests.
- Follow proof nail loading sequence outlined in the Verification Tests, except use the required proof load stated on the Design Documents.
- Proof Test Nail Acceptance Criteria:
  - The total creep movement is less than 0.04 in. during the final 10 minute reading increment. If movement exceeds this value, an additional hold period of up to 60 minutes with a 0.08 in. total creep movement maximum including the movement from the original 10 minute hold is required.
  - The total measured movement at the maximum test load exceeds 80% of the theoretical elastic elongation of the unbonded length of the test nail.
  - A pullout limit state does not occur for the proof load listed on the Design Documents. Pullout limit state is definined at a load level at which the test load cannot be further increased while there is continued movement of the test nail.

- If the proof test nails fail, Developer is responsible for redesigning the wall with supplemental rock nail anchors.

Item 416

10. Drilled Shaft Foundations

1. DESCRIPTION

Construct foundations consisting of reinforced or non-reinforced concrete drilled shafts.

2. MATERIALS

Use materials that meet the requirements of the following Items.

- Item 421, “Hydraulic Cement Concrete”
- Item 440, “Reinforcement for Concrete”
- Item 448, “Structural Field Welding”

Use concrete for drilled shafts that meets the requirements of Table 1.

Table 1

Concrete for Drilled Shafts

Drilled Shaft Type	Concrete
Non-reinforced	Class A
Reinforced	Class C
Slurry and underwater concrete placement	Class SS

Use coarse aggregate Grade 4, 5, or 6 for drilled shaft concrete in reinforced drilled shafts. Grade 2 or 3 may be used if the shaft is dry and reinforcing steel has a 5 in. minimum clear spacing.

Use a water-reducing, retarding admixture in accordance with DMS-4640, “Chemical Admixtures for Concrete,” in all concrete when using casing that will be pulled or when placing shafts underwater or under slurry.

Use concrete with slump that meets the requirements of Table 2 as determined by Tex-415-A.

Table 2

Slump Requirements

Placement Type	Minimum Acceptable Placement Slump, in.	Recommended Design and Placement Slump, in.	Maximum Acceptable Placement Slump, in.
Dry	5-1/2	6-1/2	7-1/2
Underwater and under slurry	7	8	9

Perform a slump loss test in accordance with Tex-430-A before beginning Work when casing is to be pulled or concrete is to be placed underwater or under slurry. Provide concrete that will maintain a slump of at least 4 in. throughout the entire anticipated time of concrete placement. Time of concrete placement is described in Items 416.3.6., "Concrete," and Item 416.3.7., "Additional Requirements for Slurry Displacement or Underwater Concrete Placement Methods." Note the temperature of the concrete mix at the beginning of the slump loss test. Place the concrete if its temperature at the time of placement into the drilled shaft is no more than 10°F higher than the slump loss test temperature. Use ice or other concrete cooling ingredients to lower concrete temperature, or run additional slump loss tests at the higher temperatures. Slump loss testing will be waived if anticipated time of concrete placement is less than 90 minutes.

Use mineral drilling slurry that meets the requirements of Table 3, as determined by Tex-130-E. Determine pH of slurry by Tex-128-E or pH paper strips.

Table 3

Mineral Slurry Requirements

Before Introduction into the Excavation			Sampled from the Bottom of the Excavation before Concreting		
Specific Gravity	**Sand Content**	**pH**	**Specific Gravity**	**Viscosity (seconds)**	**Sand Content**
≤ 1.10	≤ 1%	8-11	≤ 1.15	≤ 45	≤ 4%

Use mineral slurry consisting of processed bentonite or attapulgite clays mixed with clean fresh water. Do not use partially hydrolyzed polyacrylamide (PHPA) polymeric slurry or any other fluid composed primarily of a polymer solution.

Sample slurry from the bottom of the hole, before placing concrete, and test it in accordance with Tex-130-E. Use a pump or air lift to remove slurry that does not meet the requirements of Table 3 while adding fresh clean slurry to the top of the hole to maintain the slurry level. Continue this operation until the slurry sampled from the bottom of the hole meets the requirements.

3. CONSTRUCTION

Submit Drilled Shaft installation plan for review when required. Place the shaft to within the following tolerances:

- Vertical plumbness—1 in. per 10 feet of depth.
- Center of shaft located under column—1 in. of horizontal plan position.
- Center of shaft located under footing—3 in. of horizontal plan position.

Complete the embankment at bridge ends before installing drilled shafts that pass through the fill. Refer to Item 423, "Retaining Walls," for provisions for drilled shafts passing through the structural volume of retaining walls.

3.1. **Excavation.** The Design Documents indicate the expected depths and elevations for encountering satisfactory bearing material. Excavate as required for the shafts through all materials encountered to the dimensions and elevations shown on the Design Documents or required by the site conditions. Adjust the bottom of the shaft or alter the foundation if satisfactory founding material is not encountered at plan elevation, as approved to satisfactorily comply with design requirements. Blasting is not allowed for excavations.

Stop drilling if caving conditions are encountered, and adopt a construction method that stabilizes the shaft walls.

Do not excavate a shaft within 2 shaft diameters (clear) of an open shaft excavation, or one in which concrete has been placed in the preceding 24 hr.

Dispose of material excavated from shafts and not incorporated into the finished project in accordance with the Design Documents and with federal, State, and local Laws.

Provide suitable access, lighting, and equipment for proper inspection of the completed excavation and checking the dimensions and alignment of shafts excavation.

3.2. **Core Holes.** Take cores to determine the character of the supporting materials if directed. Use a method that shall result in recovery of an intact sample adequate for judging the character of the founding material. Such cores should be at least 5 ft. deeper than the proposed founding grade or a depth equal to the diameter of the shaft, whichever is greater. Take these cores when the excavation is complete.

3.3. **Casing.** Use casing when necessary to prevent caving of the material or to exclude ground water. Provide casing with an outside diameter not less than the specified diameter of the shaft. Use casing strong enough to withstand handling stresses and pressures of concrete and of the surrounding earth or water, and that is watertight, smooth, clean, and free of accumulations of hardened concrete.

Drill the portion of the shaft below the casing as close as possible to the specified shaft diameter. The portion of shaft below the casing may be as much as 2 in. smaller than the specified shaft diameter.

Use construction methods that result in a minimal amount of disturbed soil being trapped outside the casing. This does not apply to temporary undersized casings used to protect workers inside shafts or to drilled shafts designed for point bearing only.

Leave casing in place only if authorized or shown on the Design Documents. Extract casing only after placing the concrete to an appropriate level. Maintain sufficient concrete in the casing at all times to counteract soil and water pressure. Rotate or move the casing up or down a few inches if necessary before and during concrete placement to facilitate extraction of the casing.

3.4. **Requirements for Slurry Displacement Method.** Use the slurry displacement method to construct drilled shafts. Use this method to support the sides of the excavation with processed mineral slurry that is then displaced by concrete to form a continuous concrete shaft.

Install surface casing to a minimum of 10 ft. below existing ground before introducing slurry. Do not use casing other than surface casing. Do not use surface casing longer than 20 ft. without approval. Do not extract the surface casing until after placing the concrete.

Pre-mix slurry mixed at the Project site in a reservoir enough capacity to fill the excavation and for recovery of the slurry during concrete placement. Do not mix slurry in the shaft excavation or other hole. Allow adequate time for hydration of the slurry before introduction into the excavation.

Maintain a head of slurry in the shaft excavation at or near ground level or higher, as necessary, to counteract ground water pressure during and after drilling.

Use an air lift or proper size cleanout bucket, just before placing reinforcing steel, to remove any material that may have fallen from the sides of the excavation or accumulated on the bottom after the completion of drilling. Use a cleanout bucket if material is too large to be picked up with an air lift.

Re-process the hole with the auger if concrete placement is not started within 4 hr. of the completion of the shaft excavation. Then clean the bottom with an air lift or cleanout bucket, and check the slurry at the bottom of the hole for compliance with the slurry requirements of Item 416.2., “Materials.”

Agitate the congealed slurry to liquefaction if the slurry forms a gel before concrete placement, and whenever directed.

Recover and dispose of all slurry as approved, and in accordance with all federal, State, and local Laws. Do not discharge slurry into or in close proximity to streams or other bodies of water.

3.5. **Reinforcing Steel.** Completely assemble the cage of reinforcing steel, and place it as a unit immediately before concrete placement. The cage consists of longitudinal bars and lateral reinforcement (spiral reinforcement, lateral ties, or horizontal bands). Connect individual segments with couplers or by lapping steel as approved if overhead obstacles prevent placement of the cage as a single unit.

Extend the reinforcing steel cage as follows if the shaft is lengthened beyond plan length.

- Extend the cage to the bottom for shafts supporting structures other than bridges.
- Extend the cage to 25 ft. or to the bottom, whichever is shorter, for bridge shafts with plan lengths less than 25 ft.
- Do not extend the cage for bridge shafts with plan lengths at least 25 ft. that are lengthened less than 33% of plan length.

- Extend the cage for bridge shafts with plan lengths at least 25 ft. that are lengthened more than 33% of plan length.

If the cage does not reach the bottom of the shaft, it may be suspended, or a portion of the longitudinal steel may be extended to support the cage on the bottom of the shaft. Bars used to extend or support the cage may be lap spliced or welded by a qualified welder. Place the extension at the bottom of the shaft.

Tie spiral reinforcement to the longitudinal bars at a spacing no more than 24 in., or as required for a stable cage. Ensure lateral reinforcement is not welded to longitudinal bars.

Center the reinforcing steel cage in the excavation using "roller" type centering devices. Use enough devices to hold the cage in position along its entire length. Ensure flat or crescent-shaped centralizers ("sleds") are not used.

Support or hold down the cage to control vertical displacement during concrete placement or extraction of the casing. Use support that is concentric with the cage to prevent racking and distortion of the steel.

Check the elevation of the top of the steel cage before and after concrete placement or after casing extraction when casing is used. Downward movement of the steel up to 6 in. per 20 ft. of shaft length and upward movement of the steel up to 6 in. total are acceptable.

Maintain the minimum length of steel required for lap with column steel. Use dowel bars if the proper lap length is provided both into the shaft and into the column. Locate and tie all dowel bars into the cage before placing concrete or insert dowel bars into fresh, workable concrete.

Locate and tie anchor bolts when required before placement of concrete. Use templates or other devices to assure accurate placement of anchor bolts.

3.6. **Concrete.** Perform all Work in accordance with Item 420, "Concrete Substructures." Provide concrete with maximum placement temperatures as specified in Table 4. Provide thermal analysis to show and temperature recording devices to verify maximum core temperature requirements are met as specified in Item 420.4.7.14., "Mass Placements."

Table 4

Maximum Concrete Placing Temperature

Shaft Size	Mix Design Options 1-5	Mix Design Options 6-8
Diameter < 5'	95°F	95°F
5'≤ Diameter ≤ 7'	95°F	85°F
7' < Diameter	85°F	75°F

Form portions of drilled shaft that project above natural ground.

Remove loose material and accumulated seep water from the bottom of the excavation before placing concrete. Place concrete using underwater placement methods if water cannot be removed.

Place concrete as soon as possible after all excavation is complete and reinforcing steel is placed. Provide workable concrete that does not require vibrating or rodding. Vibrate formed portions of drilled shafts.

Place concrete continuously for the entire length of the shaft. Limit free fall of concrete to 25 ft. for dry shafts of 24 in. or smaller diameter. Use a suitable tube or tremie to prevent segregation of materials. Use a tube or tremie in sections to provide proper discharge and permit raising as the placement progresses. For dry shafts over 24 in. diameter, concrete can be allowed to free fall an unlimited distance if it does not strike the reinforcing cage or sides of the hole during placement. Provide a hopper with a minimum 3-ft.long drop-tube at the top of the shaft to direct concrete vertically down the center of the shaft when free fall is used. Do not use a shovel or other means to simply deflect the concrete discharge from the truck.

Maintain a sufficient head of concrete for cased shafts at all times above the bottom of the casing to overcome hydrostatic pressure. Extract casing at a slow, uniform rate with the pull in line with the axis of the shaft. Monitor the concrete level in the casing during extraction. Stop the extraction and add concrete to the casing as required to ensure a completely full hole upon casing removal. The elapsed time from the mixing of the first concrete placed into the cased portion of the shaft until the completion of extraction of the casing must not exceed the time for which the concrete maintains a slump of over 4 in. in accordance with Item 416.2., “Materials.” Modify the concrete mix, the construction procedures, or both for subsequent shafts if the elapsed time is exceeded.

Cure the top surface and treat any construction joint area in accordance with Item 420, “Concrete Substructures.”

3.7. **Additional Requirements for Slurry Displacement or Underwater Concrete Placement Methods.** Place concrete on the same day the shaft is excavated and as soon as possible after all excavation is complete and reinforcing steel is placed. Use an air lift or cleanout bucket of the proper size to clean the bottom of the excavation before placing the reinforcing steel cage and concrete. Place concrete through a closed tremie or pump it to the bottom of the excavation. Initially seal the tremie or pump line to positively separate the concrete from the slurry or water. Place concrete continuously from the beginning of placement until the shaft is completed. Keep the tremie full of concrete and well submerged in the previously placed concrete at all times if using a tremie. Raise the tremie as necessary to maintain the free flow of concrete and the stability of any casing used. Keep the discharge tube submerged in the previously placed concrete at all times if using a pump. Place additional concrete to ensure the removal of any contaminated concrete at the top of the shaft. Allow the top portion of concrete to flush completely from the hole at the completion of the pour until there is no evidence of slurry or water contamination. Do not attempt to remove this concrete with shovels, pumps, or other means. Level the top of shaft with hand tools as necessary.

Use a sump or other approved method to channel displaced fluid and concrete away from the shaft excavation. Recover slurry and dispose of it as approved. Do not discharge displaced fluids

into or near streams or other bodies of water. Provide a collar or other means of capturing slurry and the top portion of concrete flushed from the shaft for pours over water.

Remove the tube, reseal it at the bottom, penetrate with the tube into the concrete already placed by at least 5 ft., and recharge it before continuing if concrete placement is interrupted due to withdrawal of the submerged end of the tremie or pump discharge tube before completion.

The elapsed time from the mixing of the first concrete placed until the completion of concrete placement, including extraction of the casing, must not exceed the time for which the concrete maintains a slump of over 4 in. in accordance with Item 416.2, “Materials.” Modify the concrete mix, the construction procedures, or both for subsequent shafts if the elapsed time is exceeded.

3.8. **Test Load. Test load shafts, if required, in accordance with Item 405, “Foundation Load Test.”**

Item 420

11. Concrete Substructures

1. DESCRIPTION

Construct concrete substructures including footings, columns, caps, abutments, piers, culverts, other bridge substructure Elements, and other concrete structures as indicated.

2. MATERIALS

2.1. **Concrete.** Provide concrete in accordance with Item 421, "Hydraulic Cement Concrete." Provide the class of concrete for each type of structure or unit as shown on the Design Documents or in pertinent governing specifications**.**

2.2. **Grout or Mortar.** Provide grout for dowelling anchors or precast connections in accordance with DMS-4675, "Cementitiuous Grouts for Miscellaneous Applications."

2.3. **Latex Curing Materials.** Provide an acrylic-polymer latex admixture (acrylic resin emulsion per DMS-4640, "Chemical Admixtures for Concrete") suitable for producing polymer-modified concrete or mortar. Do not allow latex to freeze.

2.4. **Reinforcing Steel.** Provide reinforcing steel in accordance with Item 440, "Reinforcement for Concrete."

2.5. **Expansion Joint Material.** Provide materials in accordance with DMS-6310, "Joint Sealants and Fillers."

- Provide preformed fiber expansion joint material that conforms to the dimensions shown on the Design Documents.
- Provide preformed bituminous fiber material.
- Provide asphalt board that conforms to dimensions shown on the Design Documents.
- Provide re-bonded neoprene filler that conforms to the dimensions shown on the Design Documents.

2.6. **Waterstop.** Provide rubber or polyvinyl chloride (PVC) waterstops in accordance with DMS-6160, "Waterstops, Nylon Reinforced Neoprene Sheet, and Elastomeric Pads."

2.7. **Curing Materials.** Provide membrane curing compounds in accordance with DMS-4650, "Hydraulic Cement Concrete Curing Materials and Evaporation Retardants."

Provide cotton mats that consist of a filling material of cotton "bat" or "bats" (at least 12 oz. per square yard) completely covered with unsized cloth (at least 6 oz. per square yard) stitched longitudinally with continuous parallel rows of stitching spaced at less than 4 in., or tuft both longitudinally and transversely at intervals less than 3 in. Provide cotton mats that are free from tears and in good general condition. Provide a flap at least 6 in. wide consisting of 2 thicknesses of the covering and extending along 1 side of the mat.

Provide polyethylene sheeting that is at least 4 mils thick and free from visible defects. Provide only clear or opaque white sheeting when the ambient temperature during curing exceeds 90°F or when applicable to control temperature during mass pours.

Provide burlap-polyethylene mats made from burlap impregnated on 1 side with a film of opaque white pigmented polyethylene, free from visible defects. Provide laminated mats that have at least 1 layer of an impervious material such as polyethylene, vinyl plastic, or other acceptable material (either as a solid sheet or impregnated into another fabric) and are free of visible defects.

Provide burlap material which complies with AASHTO M 182, Class 3 (10 oz. per square yard) with the following additions:

- Manila hemp may also be used to make burlap.
- Do not use burlap fabricated from bags.
- Do not use burlap containing any water soluble ingredient which will retard the setting time of concrete.

Provide used burlap complying with the requirements stated above and that has only been used previously for curing concrete. "Like new" cleanliness is not expected, but contamination with any substance foreign to the concrete curing process, such as grease or oil, shall be cause for rejection.

2.8. **Epoxy.** Provide epoxy materials in accordance with DMS-6100, “Epoxy and Adhesives.”

3. EQUIPMENT

3.1. **Transporting and Placing Equipment.** Use appropriate transporting and placing equipment such as buckets, chutes, buggies, belt conveyors, pumps, or other equipment as necessary. Ensure concrete is not transported or conveyed through equipment made of aluminum.

Use tremies to control the fall of concrete or for underwater placement. Use tremies that are watertight and of large enough diameter to allow the placement of the concrete but less than 14 in. in diameter. Construct the tremie so the bottom can be sealed and opened once the tremie has been fully charged with concrete for underwater placements.

Use pumps with lines at least 5 in. inside diameter (I.D.) where Grade 2 or smaller coarse aggregate is used, and at least 8 in. I.D. for Grade 1 coarse aggregate.

3.2. **Vibrators.** Use immersion-type vibrators for consolidation of concrete. Provide at least 1 standby vibrator for Emergency use.

3.3. **Temperature Recording Equipment.** Use strip chart temperature recording devices, recording maturity meters in accordance with Tex-426-A, or other approved devices that are accurate to within ±2°F within the range of 32°F to 212°F for mass concrete operations, cold weather placements, and as otherwise specified.

3.4. **Artificial Heating Equipment.** Use artificial heating equipment as necessary for maintaining the concrete temperatures as specified in Item 420.4.7.11., “Placing Concrete in Cold Weather.”

3.5. **Spraying Equipment.** Use mechanically powered pressure sprayers, either air or airless, with appropriate atomizing nozzles for the application of membrane curing. Use hand-pressurized spray equipment with 2 or 3 fan-spray nozzles if approved. Ensure the spray from each nozzle overlaps the spray from adjacent nozzles by approximately 50%.

3.6. **Concrete Testing Equipment.** Provide testing equipment in accordance with Item 421.3.3., "Testing Equipment."

4. CONSTRUCTION

Obtain approval for proposed construction methods before starting Work. Approval of construction methods and equipment does not relieve Develooper's responsibility for safety or correctness of methods, adequacy of equipment, or completion of Work in full accordance with the Contract.

It is Developer's option to perform testing on structural concrete (structural classes of concrete are identified in Table 8 of Item 421.4.1., "Classification of Concrete Mix Designs,") to determine the in-situ strength to address the schedule restrictions in Item 420.4.1., "Schedule Restrictions." Developer shall perform this testing for concrete placed in cold weather. Make enough test specimens for Developer-performed testing to ensure strength requirements are met for the operations listed in Item 420.4.1., "Schedule Restrictions." Make at least 1 set of test specimens for each Element cast each day. Cure these specimens under the same conditions as the portion of the structure involved for all stages of construction. Ensure safe handling, curing, and storage of all test specimens. Provide testing personnel, and sample and test the hardened concrete in accordance with Item 421.4.8., "Sampling and Testing of Concrete." The maturity method, Tex-426-A, may be used for in-situ strength determination for schedule restrictions if approved. Coring is not allowed for in-situ strength determination for schedule restrictions. Provide TxDOT the opportunity to witness all testing operations. Report all test results to TxDOT.

4.1. **Schedule Restrictions.** Construct and open completed structures to traffic with the following limitations:

4.1.1. **Setting Forms**. Attain at least 2,500 psi compressive strength before erecting forms on concrete footings supported by piling or drilled shafts, or on individual drilled shafts. Erect forms on spread footings and culvert footings after the footing concrete has aged at least 2 curing Days as defined in Item 420.4.10., "Curing Concrete." Place concrete only after the forms and reinforcing steel have been inspected.

Support tie beam or cap forms by falsework on previously placed tie beams only if the tie beam concrete has attained a compressive strength of 2,500 psi and the member is properly supported to eliminate stresses not provided for in the design. Maintain curing as required until completion of the curing period.

Place superstructure forms or falsework on the substructure only if the substructure concrete has attained a compressive strength of 3,000 psi.

4.1.2. **Removal of Forms and Falsework**. Keep in place weight-supporting forms and falsework for bridge components and culvert slabs until the concrete has attained a compressive strength of 2,500 psi in accordance with Item 420.4.11., "Removal of Forms and Falsework." Keep all forms for mass placements in place for 4 Days following concrete placement unless otherwise approved based on the outcome of the heat control plan outlined in Item 420.4.7.14., "Mass Placements."

4.1.3. **Placement of Superstructure Members**. Erect or place superstructure members or precast substructure members only after the substructure concrete has attained a compressive strength of 3,000 psi.

4.1.4. **Opening to Traffic**. Direct traffic culverts may be opened to construction traffic when the design strength specified in Item 421.4.1., "Classification of Concrete Mix Design," has been attained if curing is maintained. Obtain approval before opening direct traffic culverts to the traveling public. Open other noncritical structural and nonstructural concrete for service upon the completion of curing.

4.1.5. **Post-Tensioned Construction**. Ensure strength requirements on the Design Documents for structural Elements designed to be post-tensioned are met for stressing and staged loading of structural Elements.

4.1.6. **Backfilling**. Backfill in accordance with Item 400, "Backfill."

4.2. **Construction Documents for Falsework and Forms.** Submit Construction Documents for falsework and forms for the following items: vertical forms for piers and single column bents; load supporting forms for caps and tie-beams; form attachments for bridges to be widened; and other items as indicated or directed. Provide design calculations when requested. Show all essential details of proposed forms, falsework, and bracing. Have a Registered Pprofessional Engineer design, seal, and sign these Construction Documents. TxDOT approval is not required, except when forms or falsework are located such that public safety can be affected, but TxDOT reserves the right to request modifications to the Construction Documents. Developer is responsible for the adequacy of these Construction Documents. Design job-fabricated formwork assuming a weight of 150 pcf for concrete, and include a liveload allowance of 50 psf of horizontal surface of the form. Do not exceed 125% of the allowable stresses used by TxDOT for the design of structures.

4.3. **Falsework.** Design and construct falsework to safely carry the maximum anticipated loads, including wind loads, and to provide the necessary rigidity. Consult AASHTO's *Guide Design Specifications for Bridge Temporary Works* and *Construction Handbook for Bridge Temporary Works* for falsework and shoring information not indicated below. Submit details in accordance with Item 420.4.2., "Construction Documents for Falsework and Forms."

Design job-fabricated falsework assuming a weight of 150 pcf for concrete, and include a liveload allowance of 50 psf of horizontal surface of the form. Do not exceed 125% of the allowable stresses used by TxDOT for the design of structures.

Do not exceed the manufacturer's maximum allowable working loads for moment and shear or end reaction for commercially produced structural units used in falsework. Include a liveload allowance of 35 psf of horizontal form surface in determining the maximum allowable working load for commercially produced structural units.

Provide timber that is sound, in good condition, and free from defects that would impair its strength. Provide timber that meets or exceeds the species, size, and grade requirements in the submitted falsework Construction Documents.

Provide wedges made of hardwood or metal in pairs to adjust falsework to desired elevations to ensure even bearing. Do not use wedges to compensate for incorrectly cut bearing surfaces.

Use sills or grillages large enough to support the superimposed load without settlement. Take precautions to prevent settling of the supporting material unless the sills or grillages are founded on solid rock, shale, or other hard materials.

Place falsework that cannot be founded on a satisfactory spread footing on piling or drilled shafts with enough bearing capacity to support the superimposed load without settlement. Drive

falsework piling to the required resistance determined by the applicable formula in Item 404, "Driving Piling." Design drilled shafts for falsework to carry the superimposed load using both skin friction and point bearing.

Weld in conformance with Item 448, "Structural Field Welding." Securely brace each falsework bent to provide the stiffness required, and securely fasten the bracing to each pile or column it crosses.

Remove falsework when it is no longer required. Pull or cut off foundations for falsework at least 2 ft. below finished ground level. Completely remove falsework, piling, or drilled shafts in a stream, lake, or bay to the approved limits to prevent obstruction to the waterway.

4.4. **Forms.** Submit formwork Construction Documents in accordance with Item 420.4.2., "Construction Documents for Falsework and Forms."

4.4.1. **General**. Provide forms of either timber or metal except where otherwise specified or permitted.

Design forms for the pressure exerted by a liquid weighing 150 pcf. Take the rate of concrete placement into consideration in determining the depth of the equivalent liquid. Include a liveload allowance of 50 psf of horizontal surface for job-fabricated forms. Do not exceed 125% of TxDOT's allowable stresses for the design of structures.

Do not exceed the manufacturer's maximum allowable working loads for moment and shear or end reaction for commercially produced structural units used for forms. Include a liveload allowance of 35 psf of horizontal form surface in determining the maximum allowable working load for commercially produced structural units.

Provide steel forms for round columns. Refer to Item 427, "Surface Finishes for Concrete," for additional requirements for off-the-form finishes.

Provide commercial form liners for imprinting a pattern or texture on the concrete surface as shown on the Design Documents and specified in Item 427.4.3.5., "Form Liner Finish."

Provide forming systems that are practically mortar-tight, rigidly braced, and strong enough to prevent bulging between supports, and maintain them to the proper line and grade during concrete placement. Maintain forms in a manner that prevents warping and shrinkage. Do not allow offsets at form joints to exceed 1/16 in.

Use only material that is inert, non-biodegradable, and nonabsorptive for forms to be left in place.

Construct all forms to permit their removal without marring or damaging the concrete. Clean all forms and footing areas of any extraneous matter before placing concrete. Provide openings in forms if needed for the removal of laitance or foreign matter.

Treat the facing of all forms with bond-breaking coating of composition that will not discolor or injuriously affect the concrete surface. Take care to prevent coating of the reinforcing steel.

Complete all preparatory Work before requesting permission to place concrete.

Cease placement if the forms show signs of bulging or sagging at any stage of the placement, and remove the portion of the concrete causing this condition immediately. Reset the forms and securely brace them against further movement before continuing the placement.

4.4.2. **Timber Forms**. Provide properly seasoned, good-quality lumber that is free from imperfections that would affect its strength or impair the finished surface of the concrete. Provide timber or lumber that meets or exceeds the requirements for species and grade in the submitted formwork Construction Documents.

Maintain forms or form lumber that will be reused so it stays clean and in good condition. Do not use any lumber that is split, warped, bulged, or marred, or that has defects in any way that will produce inferior Work. Promptly remove such lumber from the Work.

Provide form lining for all formed surfaces except:

- the inside of culvert barrels, inlets, manholes, and box girders;
- surfaces that are subsequently covered by backfill material or are completely enclosed; and
- any surface formed by a single finished board or by plywood.

Provide form lining of an approved type such as masonite or plywood. Do not provide thin membrane sheeting such as polyethylene sheets for form lining.

Use plywood at least 3/4 in. thick. Place the grain of the face plies on plywood forms parallel to the span between the supporting studs or joists unless otherwise indicated on the submitted form drawings.

Use plywood for forming surfaces that remain exposed that meets the requirements for B-B Plyform Class I or Class II Exterior of the U.S. Department of Commerce Voluntary Product Standard PS 1.

Space studs and joists so the facing form material remains in true alignment under the imposed loads.

Space wales closely enough to hold forms securely to the designated lines, scabbed at least 4 ft. on each side of joints to provide continuity. Place a row of wales near the bottom of each placement.

Place facing material with parallel and square joints, securely fastened to supporting studs.

Place forms with the form panels symmetrical (long dimensions set in the same direction) for surfaces exposed to view and receiving only an ordinary surface finish as defined in Item 420.4.13., “Ordinary Surface Finish,”. Make horizontal joints continuous.

Make molding for chamfer strips or other uses of materials of a grade that will not split when nailed and can be maintained to a true line without warping. Dress wood molding on all faces. Fill forms at all sharp corners and edges with triangular chamfer strips measuring 3/4 in. on the sides.

Use metal form ties of an approved type or a satisfactory substitute of a type that permits ease of removal of the metal to hold forms in place. Cut back wire ties at least 1/2 in. from the face of the concrete.

Use devices to hold metal ties in place that are able to develop the strength of the tie and adjust to allow for proper alignment.

Entirely remove metal and wooden spreaders that separate the forms as the concrete is being placed.

Provide adequate clean-out openings for narrow walls and other locations where access to the bottom of the forms is not readily attainable.

4.4.3. **Metal Forms.** Requirements for timber forms regarding design, mortar-tightness, filleted corners, beveled projections, bracing, alignment, removal, reuse, and wetting also apply to metal forms except metal forms do not require lining.

Use form metal thick enough to maintain the true shape without warping or bulging. Countersink all bolt and rivet heads on the facing sides. Design clamps, pins, or other connecting devices to hold the forms rigidly together and to allow removal without damage to the concrete. Use metal forms that present a smooth surface and line up properly. Keep metal free from rust, grease, and other foreign materials.

4.5. **Drains.** Install and construct weep holes and roadway drains as shown on the Design Documents.

4.6. **Placing Reinforcement and Post-Tensioning.** Place reinforcement as provided in Item 440, "Reinforcement for Concrete." Do not weld reinforcing steel supports to other reinforcing steel except where shown on the Design Documents.

Place post-tensioning ducts, anchorages, and other hardware in accordance with the approved prestressing details and Item 426, "Post-Tensioning." Keep ducts free of obstructions until all post-tensioning operations are complete.

4.7. **Placing Concrete.** Give sufficient advance notice before placing concrete in any unit of the structure to permit the inspection of forms, reinforcing steel placement, and other preparations.

Do not place concrete when impending weather conditions would impair the quality of the finished Work. Place concrete in early morning or at night or adjust the placement schedule for more favorable weather when conditions of wind, humidity, and temperature are such that concrete cannot be placed without the potential for weather related distress.

Adequately illuminate the entire placement site as approved when mixing, placing, and finishing concrete in non-daylight hours.

Furnish adequate shelter to protect the concrete against damage from rainfall or freezing temperatures as outlined in this Item if changes in weather conditions require protective measures after Work starts. Continue operations during rainfall only if approved. Use protective coverings for the material stockpiles. Cover aggregate stockpiles only to the extent necessary to control the moisture conditions in the aggregates.

Allow at least 1 curing Day after the concrete has achieved initial set before placing strain on projecting reinforcement to prevent damage to the concrete.

4.7.1. **Placing Temperature**. Place concrete according to the following temperature limits for the classes of concrete defined in Item 421.4.1., "Classification of Concrete Mix Designs."

- Place Class C, F, H, K, or SS concrete only when its temperature at time of placement is between 50°F and 95°F. Increase the minimum placement temperature to 60°F if ground-granulated blast furnace (GGBF) slag is used in the concrete.
- Place Class S concrete, used in this Item only as indicated for culvert top slabs, only when its temperature is between 50°F and 85°F. Increase the minimum placement temperature to 60°F if ground-granulated blast furnace (GGBF) slag is used in the concrete.
- Place Class A, B, and D concrete only when its temperature at the time of placement is greater than 50°F.
- Place mass concrete in accordance with Item 420.4.7.14., "Mass Placements," only when its temperature at the time of placement is between 50°F and 75°F.

4.7.2. **Transporting Time**. Begin the discharge of concrete delivered in truck mixers within the times listed in Table 15 of Item 421, "Hydraulic Cement Concrete."

4.7.3. **Workability of Concrete**. Place concrete with a slump as specified in Item 421.4.2.4., "Slump." Concrete that exceeds the maximum slump shall be immediately rejected. Water may be added to the concrete before discharging any concrete from the truck to adjust for low slump provided that the maximum mix design water–cement ratio is not exceeded. Mix concrete in accordance with Item 421.4.6., "Mixing and Delivering Concrete," after introduction of any additional water or chemical admixtures. Do not add water or chemical admixtures after any concrete has been discharged.

4.7.4. **Transporting Concrete**. Transport concrete by buckets, chutes, buggies, belt conveyors, pumps, or other methods.

Protect concrete transported by conveyors from sun and wind to prevent loss of slump and workability. Shade or wrap with wet burlap pipes through which concrete is pumped as necessary to prevent loss of slump and workability.

Arrange and use chutes, troughs, conveyors, or pipes so the concrete ingredients will not be separated. Terminate such equipment in vertical downspouts when necessary to prevent segregation. Extend open troughs and chutes, if necessary, down inside the forms or through holes left in the forms.

Keep all transporting equipment clean and free from hardened concrete coatings. Discharge water used for cleaning clear of the concrete.

4.7.5. **Preparation of Surfaces**. Thoroughly wet all forms and hardened concrete on which concrete is to be placed before placing concrete on them. Remove any remaining puddles of excess water before placing concrete. Provide surfaces that are in a moist, saturated surface-dry condition when concrete is placed on them.

Ensure the subgrade or foundation is moist before placing concrete on grade. Lightly sprinkle the subgrade if dry.

4.7.6. **Expansion Joints**. Construct joints and devices to provide for expansion and contraction in accordance with plan details.

Use light wire or nails to anchor any preformed fiber joint material to the concrete on 1 side of the joint.

Ensure finished joints conform to the plan details with the concrete sections completely separated by the specified opening or joint material.

Remove all concrete within the joint opening soon after form removal and again where necessary after surface finishing to ensure full effectiveness of the joint.

4.7.7. **Construction Joints**. A construction joint is the joint formed by placing plastic concrete in direct contact with concrete that has attained its initial set. Monolithic placement means the manner and sequence of concrete placing does not create a construction joint.

Make construction joints of the type and at the locations shown on the Design Documents. Additional joints in other members are not permitted without approval. Place authorized additional joints using details equivalent to those shown on the Design Documents for joints in similar locations.

Make construction joints square and normal to the forms. Use bulkheads in the forms for all vertical joints.

Thoroughly roughen the top surface of a concrete placement terminating at a horizontal construction joint as soon as practical after initial set is attained.

Thoroughly clean the hardened concrete surface of all loose material, laitance, dirt, and foreign matter, and saturate it with water. Remove all free water and moisten the surface before concrete or bonding grout is placed against it. Ensure the surface of the existing concrete is in a saturated surface-dry condition (SSD) just before placing subsequent concrete. Prewet the existing concrete by ponding water on the surface for 24 hr. before placing subsequent concrete. Use high-pressure water blasting if ponding is not possible to achieve SSD conditions 15 to 30 min. before placing the concrete. A SSD condition is achieved when the surface remains damp when exposed to sunlight for 15 min.

Draw forms tight against the existing concrete to avoid mortar loss and offsets at joints.

Bonding agents are not required. Coat the joint surface with bonding mortar, grout, epoxy, or other material if a bonding agent is required as indicated on the Design Documents. Provide Type V epoxy per DMS-6100, “Epoxies and Adhesives,” for bonding fresh concrete to hardened concrete. Place the bonding epoxy on a clean, dry surface, and place the fresh concrete while the epoxy is still tacky. Place bonding mortar or grout on a surface that is SSD, and place the concrete before the bonding mortar or grout dries. Place other bonding agents in accordance with the manufacturer’s recommendations.

4.7.8. **Handling and Placing**. Minimize segregation of the concrete and displacement of the reinforcement when handling and placing concrete. Produce a uniform, dense compact mass.

Ensure concrete free-falls no more than 5 ft. except in the case of drilled shafts, thin walls such as in culverts, or as allowed by other Items. Remove any hardened concrete splatter ahead of the plastic concrete.

Fill each part of the forms by depositing concrete as near its final position as possible. Do not deposit large quantities or concrete at 1 point and run or move the concrete along to fill the forms.

Deposit concrete in the forms in layers of suitable depth but no more than 36 in. deep.

Avoid cold joints in a monolithic placement. Sequence successive layers or adjacent portions of concrete so they can be vibrated into a homogeneous mass with the previously placed concrete before it sets. Allow no more than 1 hr. to elapse between adjacent or successive placements of concrete when re-vibration of the concrete is shown on the Design Documents except as otherwise allowed by an approved placing procedure. This time limit may be extended by 1/2 hr. if the concrete contains at least the minimum recommended dosage of a Type B or D admixture.

Use an approved Type B or D admixture to control stress cracks and cold joints in placements where differential settlement and setting time may induce cracking.

4.7.9. **Consolidation**. Carefully consolidate concrete and flush mortar to the form surfaces with immersion type vibrators. Do not use vibrators that operate by attachment to forms or reinforcement except where approved on steel forms.

Vibrate the concrete immediately after deposit. Systematically space points of vibration to ensure complete consolidation and thorough working of the concrete around the reinforcement, embedded fixtures, and into the corners and angles of the forms. Insert the vibrators vertically where possible. Vibrate the entire depth of each lift, allowing the vibrator to penetrate several inches into the preceding lift. Do not use the vibrator to move the concrete to other locations in the forms. Do not drag the vibrator through the concrete. Thoroughly consolidate concrete along construction joints by operating the vibrator along and close to but not against the joint surface. Continue the vibration until the concrete surrounding reinforcements and fixtures is completely consolidated. Hand-spade or rod the concrete if necessary to ensure flushing of mortar to the surface of all forms.

4.7.10. **Installation of Dowels and Anchor Bolts**. Install dowels and anchor bolts by casting them in-place or by grouting with grout, epoxy, or epoxy mortar. Form or drill holes for grouting. Follow the manufacturer's recommended installation procedures for pre-packaged grout or epoxy anchor systems. Test anchors if required on the Design Documents or by other Items.

Drill holes for anchor bolts to accommodate the bolt embedment required by the Design Documents. Make holes for dowels at least 12 in. deep. Make the hole diameter at least twice the dowel or bolt diameter, but not exceeding the dowel or bolt diameter plus 1-1/2 in. when using cementitious grout or epoxy mortar. Make the hole diameter 1/16 to 1/4 in. greater than the dowel or bolt diameter when using neat epoxy.

Thoroughly clean holes of all loose material, oil, grease, or other bond-breaking substance, and blow them clean with filtered compressed air. Use a wire brush followed by oil-free compressed air to remove all loose material from the holes, repeating as necessary until no more material is removed. Ensure holes are in a surface-dry condition when epoxy type materials are used and in a surface-moist condition when cementitious grout is used. Develop and demonstrate for approval a procedure for cleaning and preparing the holes for installation of the dowels and anchor bolts. Completely fill the void between the hole and dowel or bolt with grouting material.

Follow exactly the requirements for cleaning outlined in the product specifications for pre-packaged systems.

Provide hydraulic cement grout for cast-in-place or grouted systems in accordance with DMS-4675, “Cementitious Grouts and Mortars for Miscellaneous Applications.”. Provide a Type III epoxy per DMS-6100, “Epoxies and Adhesives,” when neat epoxy is used for anchor bolts or dowels. Provide Type VIII epoxy per DMS-6100, “Epoxies and Adhesives,” when an epoxy grout is used. Provide grout, epoxy, or epoxy mortar as the binding agent.

Provide other anchor systems as required on the Design Documents.

4.7.11. **Placing Concrete in Cold Weather**. Protect concrete placed under weather conditions where weather may adversely affect results. Remove and replace concrete if it is determined unsatisfactory due to poor conditions.

Do not place concrete in contact with any material coated with frost or having a temperature of 32°F or lower. Do not place concrete when the ambient temperature in the shade is below 40°F and falling. Place concrete when the ambient temperature in the shade is at least 35°F and rising or above 40°F.

Provide and install recording thermometers, maturity meters, or other suitable temperature measuring devices to verify all concrete is effectively protected as follows:

- Maintain the temperature at all surfaces of concrete in bents, piers, culvert walls, retaining walls, parapets, wingwalls, top slabs of non-direct traffic culverts, and other similar formed concrete at or above 40°F for 72 hr. from the time of placement.
- Maintain the temperature of all other concrete, including the bottom slabs (footings) of culverts, placed on or in the ground above 32°F for 72 hr. from the time of placement.

Use additional covering, insulated forms, or other means and, if necessary, supplement the covering with artificial heating. Avoid applying heat directly to concrete surfaces. Cure as specified in Item 420.4.10., “Curing Concrete,” during this period until all requirements for curing have been satisfied.

Have all necessary heating and covering material ready for use before permission is granted to begin placement when impending weather conditions indicate the possible need for temperature protection.

4.7.12. **Placing Concrete in Hot Weather**. Keep the concrete at or below the maximum temperature at time of placement as specified in Item 420.4.7.1., “Placing Temperature.” Sprinkle and shade aggregate stockpiles or use ice, liquid nitrogen systems, or other approved methods as necessary to control the concrete temperature.

4.7.13. **Placing Concrete in Water**. Deposit concrete in water only when shown on the Design Documents or with approval. Make forms or cofferdams tight enough to prevent any water current passing through the space in which the concrete is being deposited. Do not pump water during the concrete placing or until the concrete has set for at least 36 hr.

Place the concrete with a tremie or pump, or use another approved method, and do not allow it to fall freely through the water or disturb it after it is placed. Keep the concrete surface level during placement.

Support the tremie or operate the pump so it can be easily moved horizontally to cover all the work area and vertically to control the concrete flow. Submerge the lower end of the tremie or pump hose in the concrete at all times. Use continuous placing operations until the Work is complete.

Design the concrete mix in accordance with Item 421, "Hydraulic Cement Concrete," with a minimum cement content of 650 lb. per cubic yard for concrete to be placed under water. Include an anti-washout admixture in the mix design as necessary to produce a satisfactory finished product.

4.7.14. **Mass Placements**. Develop and obtain approval for a heat control plan for monolithic placements designated on the Design Documents as mass concrete to ensure the following during the heat dissipation period:

- the temperature differential between the central core of the placement and the exposed concrete surface does not exceed 35°F and
- the temperature at the central core of the placement does not exceed 160°F.

Use the ConcreteWorks© software available from TxDOT, or another approved method based on the guidelines in ACI 207, "Mass Concrete," to develop the heat control plan. TxDOT will make available technical assistance on the use of ConcreteWorks©. Develop the heat control plan using historical temperature ranges for the anticipated time of the mass placement. Re-create the plan if the Work schedule shifts by more than one month.

The heat control plan may include a combination of the following elements:

- selection of concrete ingredients including aggregates, gradation, and cement types, to minimize heat of hydration;
- use of ice or other concrete cooling ingredients;
- use of liquid nitrogen dosing systems;
- controlling rate or time of concrete placement;
- use of insulation or supplemental external heat to control heat loss;
- use of supplementary cementing materials;
- use of a cooling system to control the core temperature; or
- vary the duration formwork remains in place.

Furnish and install 2 pairs of temperature recording devices, maturity meters, or other approved equivalent devices. Install devices to measure the surface temperature no more than 3 in. from the surface. Install devices to measure the core temperature a distance of half the least dimension from the nearest surface near the point of maximum predicted heat. Use these devices to simultaneously measure the temperature of the concrete at the core and the surface. Maintain temperature control methods for 4 Days unless otherwise approved based on the submitted heat control plan. Do not use maturity meters to predict strength of mass concrete. Revise the heat control plan as necessary to maintain the temperature limitations shown above.

If the core temperature exceeds 160°F, the mass concrete Element shall be subject to review and acceptance using forensic analyses to determine its potential reduction in service life or performance. Proceed with subsequent construction on the affected Element only when notified regarding acceptance. Repair any resulting cracking if the temperature differential between the central core of the placement and the nearest concrete surface exceeds 35°F and revise the heat control plan as necessary to prevent further occurrences.

4.7.15. **Placing Concrete in Foundation and Substructure**. Do not place concrete in footings until the depth and character of the foundation has been inspected and permission has been given to proceed.

Place concrete footings upon seal concrete after the cofferdams are free from water and the seal concrete is cleaned. Perform any necessary pumping or bailing during the concreting from a suitable sump located outside the forms.

Construct or adjust all temporary wales or braces inside cofferdams as the Work proceeds to prevent unauthorized construction joints.

Omit forms when footings can be placed in a dry excavation without the use of cofferdams, if approved, and fill the entire excavation with concrete to the elevation of the top of footing.

Place concrete in columns monolithically between construction joints. Columns and caps or tie beams supported on them may be placed in the same operation or separately. Allow for settlement and shrinkage of the column concrete, if placed in the same operation, by placing it to the lower level of the cap or tie beam, and delay placement between 1 and 2 hr. before proceeding with the cap or tie beam placement.

4.7.16. **Placing Concrete in Box Culverts**. Allow between 1 and 2 hr. to elapse where the top slab and walls are placed monolithically in culverts more than 4 ft. in clear height before placing the top slab to allow for settlement and shrinkage in the wall concrete.

Accurately finish the footing slab at the proper time to provide a smooth uniform surface. Finish top slabs that carry direct traffic as specified in Item 422, “Concrete Superstructures.” Give top slabs of fill type culverts a float finish.

4.8. **Extending Existing Substructures.** Verify pertinent dimensions and elevations of the existing structure before ordering any required materials.

4.8.1. **Removal**. Remove portions of the existing structure to the lines and dimensions shown on the Design Documents. Dispose of these materials as shown on the Design Documents. Repair any portion of the remaining structure damaged as a result of the construction.

Do not use explosives to remove portions of the existing structure. Do not use a demolition ball, other swinging weight, or impact equipment. Use pneumatic or hydraulic tools for final removal of concrete at the “break” line. Use removal equipment, as approved, that will not damage the remaining concrete.

4.8.2. **Reuse of Removed Portions of Structure**. Detach and remove all portions of the old structure that are to be incorporated into the extended structure to the lines and details as specified on the Design Documents. Move the unit to be reused to the new location specified using approved methods. Place the reinforcement and extension concrete according to the plan details.

4.8.3. **Splicing Reinforcing Steel**. Splice new reinforcing bars to exposed bars in the existing structure using lap splices in accordance with Item 440, “Reinforcement for Concrete.” The new reinforcing steel does not need to be tied to the existing steel where spacing or elevation does not match that of the existing steel provided the lap length is attained. Weld in accordance with Item 448, “Structural Field Welding,” when welded splices are permitted. Install any required dowels in accordance with Item 420.4.7.10., “Installation of Dowels and Anchor Bolts.”

4.8.4. **Concrete Preparation**. Roughen and clean concrete surfaces that are in contact with new construction before placing forms. Prepare these construction joint surfaces in accordance with Item 420.4.7.7., "Construction Joints."

4.9. **Treatment and Finishing of Horizontal Surfaces.** Strike off to grade and finish all unformed upper surfaces. Do not use mortar topping for surfaces constructed under this Section.

Float the surface with a suitable float after the concrete has been struck off.

Slope the tops of caps and piers between bearing areas from the center slightly toward the edge, and slope the tops of abutment and transition bent caps from the backwall to the edge so water drains from the surface. Give the concrete a smooth trowel finish. Construct bearing areas for steel units in accordance with Item 441, "Bearing and Anchorage Devices." Give the bearing area under the expansion ends of concrete slabs and slab and girder spans a steel-trowel finish to the exact grades required. Give bearing areas under elastomeric bearing pads or nonreinforced bearing seat buildups a textured, wood float finish. Do not allow the bearing area to vary from a level plane more than 1/16 in. in all directions.

Cast bearing seat buildups or pedestals for concrete units integrally with the cap or a construction joint. Provide a latex-based mortar, an epoxy mortar, or an approved proprietary bearing mortar for bearing seat buildups cast with a construction joint. Mix mortars in accordance with the manufacturer's recommendations. Construct pedestals of Class C concrete, reinforced as shown on the Design Documents or as indicated in Figure 1 and Figure 2. The engineer of record shall design pedestals higher than 12 in.

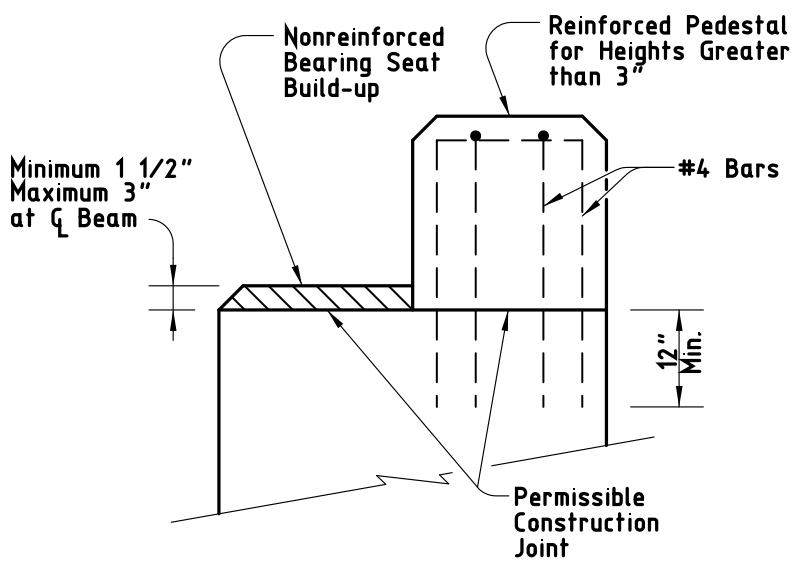

Figure 1

Section through bearing seat buildups.

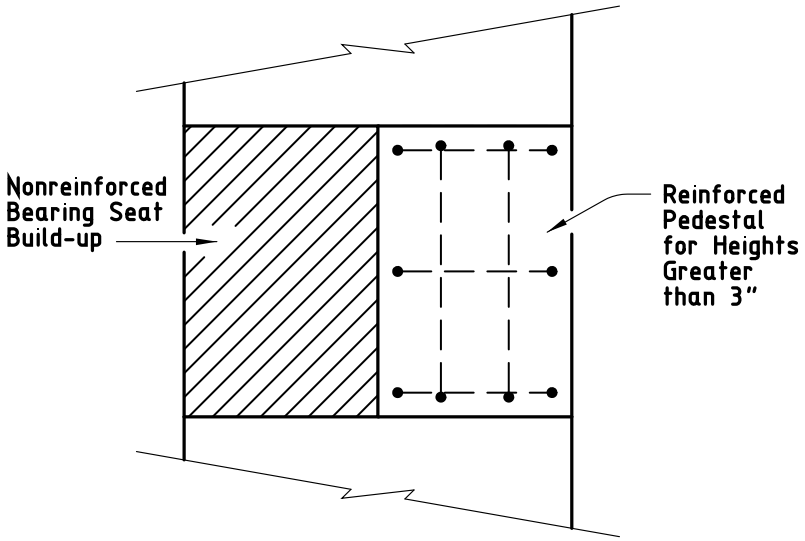

Figure 2

Plan view of bearing seat buildups.

4.10. **Curing Concrete.** Obtain approval of the proposed curing methods, equipment, and materials before placing concrete. Inadequate curing or facilities may delay all concrete placements on the job until remedial action is taken.

A curing Day is a Day when the temperature, taken in the shade away from artificial heat, is above 50°F for at least 19 hr. or, on colder Days if the temperature of all surfaces of the concrete is maintained above 40°F, for the entire 24 hr. The required curing period begins when all concrete has attained its initial set. Tex-440-A may be used to determine when the concrete has attained its initial set.

Cure all concrete for 4 consecutive Days except as allowed for the curing options listed below. Use form or membrane curing for vertical surfaces. Use only water curing for horizontal surfaces of HPC or mass concrete. Use water or membrane curing for horizontal or unformed surfaces for all other concrete.

Use one of the following curing options for vertical surfaces,.

- Form cure for 48hr. after placement.
- Form cure for 12 hr. after placement followed by membrane curing.
- For HPC Concrete, form cure for 48 hr. after placement followed by membrane curing.
- For mass concrete, form cure as required by the heat control plan followed by membrane curing if forms are removed before 4 Days.

Apply membrane curing, if used, within 2 hr. of form removal.

Use only water curing in accordance with this Section for the top surface of any concrete unit upon which concrete is to be placed and bonded at a later interval (stub walls, caps with backwalls, risers, etc.).

Cure all other concrete as specified in the pertinent Items. Use the following methods for curing concrete, subject to the requirements of this Item.

4.10.1. **Form Curing**. When forms are left in intimate contact with the concrete, other curing methods are not required except for exposed surfaces and for cold weather protection. Use another approved curing method if forms are removed before the 4-Day required curing period.

4.10.2. **Water Curing**. Keep all exposed surfaces of the concrete wet continuously for the required curing time. Use water curing in accordance with concrete mixing water in Item 421.2.4., "Water." Do not use seawater or water that stains or leaves an unsightly residue.

4.10.2.1. **Blankets**. Keep the concrete continuously wet by maintaining wet cotton or burlap mats in direct contact with the concrete for the required curing time. Weight the mats adequately to provide continuous contact with all concrete. Cover surfaces that cannot be cured by direct contact with mats, forming an enclosure well anchored to the forms or ground so outside air cannot enter the enclosure. Provide sufficient moisture inside the enclosure to keep all surfaces of the concrete wet.

4.10.2.2. **Water Spray**. Overlap sprays or sprinklers to keep all unformed surfaces continuously wet.

4.10.2.3. **Ponding**. Cover the surfaces with at least 2 in. of clean granular material, kept wet at all times, or at least 1 in. deep water. Use a dam to retain the water or saturated granular material.

4.10.3. **Membrane Curing**. Choose either Type 1-D or Type 2 membrane-curing compound. Use same type of curing compound on an individual member.

Apply membrane curing just after free moisture has disappeared at a rate of approximately 180 sq. ft. per gallon. Do not spray curing compound on projecting reinforcing steel or concrete that will later form a construction joint. Do not apply membrane curing to dry surfaces. Dampen formed surfaces and surfaces that have been given a first rub so they are moist at the time of application of the membrane.

Leave the film unbroken for the minimum curing period specified when membrane is used for complete curing. Correct damaged membrane immediately by reapplication of membrane. Polyethylene sheeting, burlap-polyethylene mats, or laminated mats in close contact with the concrete surfaces are equivalent to membrane curing.

4.11. **Removal of Forms and Falsework.** Remove forms for vertical surfaces after the concrete has aged a minimum of 12 hr. after initial set provided the removal can be done without damage to the concrete. Keep forms for mass placements in place for 4 Days following concrete placement unless otherwise approved based on the outcome of the heat control plan outlined in Item 420.4.7.14., "Mass Placements."

Leave in place weight-supporting forms and falsework spanning more than 1 ft. for all bridge components and culvert slabs until the concrete has attained a compressive strength of 2,500 psi. Remove forms for other structural components as necessary.

Remove inside forms (walls and top slabs) for box culverts and sewers after concrete has attained a compressive strength of 1,800 psi if an approved overhead support system is used to transfer the weight of the top slab to the walls of the box culvert or sewer before removal of the support provided by the forms.

Forms or parts of forms may be removed only if constructed to permit removal without disturbing forms or falsework required to be left in place for a longer period on other portions of the structure.

Remove all metal appliances used inside forms for alignment to a depth of at least 1/2 in. from the concrete surface. Make the appliances so metal may be removed without undue chipping or spalling of the concrete, and so it leaves a smooth opening in the concrete surface when removed. Do not burn off rods, bolts, or ties.

Remove all forms and falsework.

4.12. **Defective Work.** Repair defective Work as soon as possible. Remove and replace any defect that cannot be repaired to the satisfaction of TxDOT.

4.13. **Ordinary Surface Finish.** Apply an ordinary surface finish to all concrete surfaces. Provide flat or textured surfaces as specified with uniform appearance. Address defects and surface irregularities not consistent with the intent of the expected finish by the following:

- Chip away all loose or broken material to sound concrete where porous, spalled, or honeycombed areas are visible after form removal.
- Repair spalls in accordance with the procedures outlined in the TxDOT *Concrete Repair Manual* available on TxDOT's website.
- Clean and fill holes or spalls caused by the removal of form ties, etc., with latex grout, cement grout, or epoxy grout as approved. Fill only the holes. Do not blend the patch with the surrounding concrete. On surfaces to receive a rub finish in accordance with Item 427, "Surface Finishes for Concrete," chip out exposed parts of metals chairs to a depth of 1/2 in. and repair the surface.
- Remove all fins, rust staining, runs, drips, or mortar from surfaces that will be exposed. Smooth all form marks and chamfer edges by grinding or dry-rubbing.
- Ensure all repairs are dense, well-bonded, and properly cured. Finish exposed large repairs to blend with the surrounding concrete where a higher class of finish is not specified.

Apply an ordinary surface finish as the final finish to the following exposed surfaces:

- inside and top of inlets
- inside and top of manholes
- inside of sewer appurtenances
- inside of culvert barrels

Form marks and chamfer edges do not need to be smoothed for the inside of culvert barrels.

Item 421

12. Hydraulic Cement Concrete

1. DESCRIPTION

Furnish hydraulic cement concrete for concrete pavements, concrete structures, and other concrete construction.

2. MATERIALS

Use materials from prequalified sources listed on TxDOT's website. Provide coarse and fine aggregates from sources listed in TxDOT's *Concrete Rated Source Quality Catalog* (CRSQC). Use materials from non-listed sources only when tested and approved by TxDOT before use. Allow 30 Days for sampling, testing, and reporting results for non-listed sources. Do not combine approved material with unapproved material.

2.1. **Cement. Furnish cement conforming to DMS-4600, "Hydraulic Cement."**

2.2. **Supplementary Cementing Materials (SCM).**

- **Fly Ash**. Furnish fly ash, ultra-fine fly ash (UFFA), and modified Class F fly ash (MFFA) conforming to DMS-4610, "Fly Ash."
- **Slag Cement**. Furnish Slag Cement conforming to DMS-4620, " Slag Cement."
- **Silica Fume**. Furnish silica fume conforming to DMS-4630, "Silica Fume."
- **Metakaolin**. Furnish metakaolin conforming to DMS-4635, "Metakaolin."

2.3. **Cementitious Material.** Cementitious materials are the cement and supplementary cementing materials used in concrete.

2.4. **Chemical Admixtures.** Furnish admixtures conforming to DMS-4640, "Chemical Admixtures for Concrete."

2.5. **Water.** Furnish mixing and curing water that is free from oils, acids, organic matter, or other deleterious substances. Water from municipal supplies approved by the Texas Department of Health will not require testing. Provide test reports showing compliance with Table 1 before use when using water from other sources.

Water that is a blend of concrete wash water and other acceptable water sources, certified by the concrete producer as complying with the requirements of both Table 1 and Table 2, may be used as mix water. Test the blended water weekly for 4 weeks for compliance with Table 1 and Table 2 or provide previous test results. Then test every month for compliance. Provide water test results upon request.

Table 1

Chemical Limits for Mix Water

Contaminant	Test Method	Maximum Concentration (ppm or mg\L)
Chloride (Cl)	ASTM C114	
Prestressed concrete		500
Bridge decks & superstructure		500
All other concrete		1,000
Sulfate (SO4)	ASTM C114	2,000
Alkalies (Na2O + 0.658K2O)	ASTM C114	600
Total solids	ASTM C1603	50,000

Table 2

Acceptance Criteria for Questionable Water Supplies

Property	Test Method	Limits
Compressive strength, min % control at 7 Days	ASTM C31, ASTM C39[1,2]	90
Time of set, deviation from control, h:min.	ASTM C403	From 1:00 early to 1:30 later

Base comparisons on fixed proportions and the same volume of test water compared to the control mix using 100% potable water or distilled water.

Base comparisons on sets consisting of at least two standard specimens made from a composite sample.

Do not use mix water that has an adverse effect on the air-entraining agent, on any other chemical admixture, or on strength or time of set of the concrete. Use mixing and curing water free of iron and other impurities that may cause staining or discoloration when using white hydraulic cement.

2.6. Aggregate.

2.6.1. **Coarse Aggregate**. Provide coarse aggregate consisting of durable particles of gravel, crushed blast furnace slag, recycled crushed hydraulic cement concrete, crushed stone, or combinations which are free from frozen material and from injurious amounts of salt, alkali, vegetable matter, or other objectionable material, either free or as an adherent coating. Provide coarse aggregate of uniform quality throughout.

Provide coarse aggregate with the requirements listed in Table 3.

Table 3

Coarse Aggregate Requirements

Description	Test Method	Limit
Weight of Clay Lumps, % max.	Tex-413-A	0.25
Weight of Shale, % max		1.0
Weight of Laminate and Friable Particle, % max		5.0
L.A. Abrasion Wear, % max	Tex-410-A	40
5-Cycle Magnesium Sulfate Soundness[1,2], non-air-entrained concrete, % max	Tex-411-A	25
5-Cycle Magnesium Sulfate Soundness[1,3], air-entrained concrete, % max		18
Loss by Decantation, % max	Tex-406-A	1.5

1. Recycled crushed hydraulic cement concrete is not subject to 5-cycle magnesium sulfate soundness requirements.
2. Allowed when air-entrained concrete is used at Developer's option.
3. Only when air-entrained concrete is required by the Design Documents.

Increase the loss by decantation limit to 3.0% for all classes of concrete and 5.0% for Class A and B if the material finer than the No. 200 sieve is determined to be at least 85% calcium carbonate in accordance with Tex-406-A, Part III, in the case of coarse aggregates made primarily from crushing stone. Provide test results upon request.

Provide coarse aggregate conforming to the gradation requirements shown in Table 4 when tested in accordance with Tex-401-A.

Table 4

Coarse Aggregate Gradation Chart

Aggregate Grade No.[1]	Maximum Nominal Size	Percent Passing on Each Sieve								
		2-1/2"	2"	1-1/2"	1"	3/4"	1/2"	3/8"	No. 4	No. 8
1	2"	100	80–100	50–85		20–40			0–10	
2	1–1/2"		100	95–100		35–70		10–30	0–10	
3	1–1/2"		100	95–100		60–90	25–60		0–10	
4 (57)	1"			100	95–100		25–60		0–10	0–5
5 (67)	3/4"				100	90–100		20–55	0–10	0–5
6 (7)	1/2"					100	90–100	40–70	0–15	0–5
7	3/8"						100	70–95	0–25	
8	3/8"						100	95–100	20–65	0–10

1. Corresponding ASTM C33 gradation shown in parentheses.

2.6.2. **Fine Aggregate**. Provide fine aggregate consisting of clean, hard, durable particles of natural, manufactured sand, recycled crushed hydraulic cement concrete, slag, lightweight aggregate, or a combination

thereof. Provide fine aggregate free from frozen material and from injurious amounts of salt, alkali, vegetable matter, or other objectionable material.

Provide fine aggregates with the requirements in Table 5.

Table 5

Fine Aggregate Requirements

Description	Test Method	Limit
Weight of Clay Lumps, % max.	Tex-413-A	0.50
Organic Impurities[1]	Tex-408-A	Color Not Darker Than Standard
Sand Equivalent	Tex-203-F	80
Fineness Modulus	Tex-402-A	2.3 to 3.1

1. Only when air-entrained concrete is specified.

Provide fine aggregate or combinations of aggregates conforming to the gradation requirements shown in Table 6 when tested in accordance with Tex-401-A.

Table 6

Fine Aggregate Gradation Chart (Grade 1)

Sieve Size	Percent Passing
3/8 in.	100
No. 4	95–100
No. 8	80–100
No. 16	50–85
No. 30	25–65
No. 50	10–35[1]
No. 100	0–10
No. 200	0–3[2]

1. 6–35 when sand equivalent value is greater than 85.
2. 0–6 for manufactured sand.

2.6.3. **Intermediate Aggregate**. Provide intermediate aggregate consisting of clean, hard, durable particles of natural, manufactured sand, slag, recycled crushed hydraulic cement concrete, lightweight aggregate, or a combination thereof when optimized aggregate gradation (OAG) concrete is specified or when used at Developer's option. Provide intermediate aggregate free from frozen material and injurious amounts of salt, alkali, vegetable matter, or other objectionable material.

Provide intermediate aggregate with the requirements in Table 7.

Table 7

Intermediate Aggregate Requirements

Description	Test Method	Limit
Weight of Clay Lumps, % max.	Tex-413-A	0.50
L.A. Abrasion Wear[1], % max	Tex-410-A	40
5-Cycle Magnesium Sulfate Soundness[1,2,3], non-air-entrained concrete % max	Tex-411-A	25
5-Cycle Magnesium Sulfate Soundness[1,2,4], air-entrained concrete % max		18
Organic Impurities[5]	Tex-408-A	Color not Darker than Standard
Loss by Decantation[1], % max	Tex-406-A	1.5

1. Only applies to the portion retained on the No. 4 sieve, if more than 30% of the intermediate aggregate is retained on the No. 4 sieve.
2. Recycled crushed hydraulic cement concrete is not subject to 5-cycle magnesium sulfate soundness requirements.
3. Allowed when air-entrained concrete is used at Developer's option.
4. Only when air-entrained concrete is required by the Design Documents.
5. Only applies to the portion passing the 3/8" sieve, if more than 30% of the intermediate aggregate is passing the 3/8" sieve.

For the portion retained on the No. 4 sieve, if more than 30% of the intermediate aggregate is retained on the No. 4 sieve, and in the case of aggregates made primarily from crushing stone, , the loss by decantation may be increased to 3.0% for all classes of concrete and 5.0% for Class A and B if the material finer than the No. 200 sieve is determined to be at least 85% calcium carbonate in accordance with Tex-406-A, Part III. Provide test results upon request.

2.7. **Mortar and Grout.** Furnish pre-packaged grouts conforming to DMS-4675, "Cementitious Grouts and Mortars for Miscellaneous Applications," when specified for applications other than post-tension grouting.

Item 421.4.2.6 "Mix Design Options" does not apply for mortar and grout.

2.8. **Storage of Materials.**

2.8.1. **Cement and Supplementary Cementing Materials**. Store all cement and supplementary cementing materials in weatherproof enclosures that will protect them from dampness or absorption of moisture.

When permitted, small quantities of packaged cementitious material may be stored in the open, on a raised platform, and under waterproof covering for up to 48 hr.

2.8.2. **Aggregates**. Handle and store concrete aggregates in a manner that prevents contamination with foreign materials. Clear and level the sites for the stockpiles of all vegetation if the aggregates are stored on the ground and do not use the bottom 6-in. layer of aggregate without cleaning the aggregate before use.

Maintain separate stockpiles and prevent intermixing when conditions require the use of 2 or more grades of coarse aggregates. Separate the stockpiles using physical barriers where space is limited. Store aggregates from different sources in different stockpiles. Minimize segregation in stockpiles. Remix and test stockpiles when segregation is apparent.

Sprinkle stockpiles to control moisture and temperature as necessary. Maintain reasonably uniform moisture content in aggregate stockpiles.

2.8.3. **Chemical Admixtures**. Store admixtures in accordance with manufacturer's recommendations and prevent admixtures from freezing.

3. EQUIPMENT

3.1. **Concrete Plants and Mixing Equipment.** Except for volumetric stationary plant or truck (auger) mixers, each plant and truck mixer must be currently certified by the NRMCA or have an inspection report signed and sealed by a Registered Professional Engineer showing concrete measuring, mixing, and delivery equipment meets all requirements of ASTM C94. A new certification or signed and sealed report is required every time a plant is moved. Plants with a Registered Professional Engineer's inspection require re-inspection every 2 yr. Provide a copy of the certification or the signed and sealed inspection report to TxDOT. Remove equipment or facilities from service until corrected when they fail to meet specification requirements.

When allowed on the Design Documents, for concrete classes not identified as structural concrete in Table 5 or for Class C concrete not used for bridge-class structures, inspection and approval of all plants and trucks instead of the NRMCA or non-TxDOT engineer-sealed certifications may be performed. The criteria and frequency of approval of plants and trucks is the same used for NRMCA certification.

Inspect and furnish inspection reports on the condition of blades and fins and their percent wear from the original manufacturer's design for truck mixers and agitators annually. Repair mixing equipment exhibiting 10% or more wear before use. If an inspection within 12 mo. is not practical, a 2-mo. grace period (for a maximum of 14 mo. between inspections) is permitted.

3.1.1. **Scales**. Check all scales before beginning of operations, after each move, or whenever their accuracy or adequacy is questioned, and at least once every 6 mo. Immediately correct deficiencies, and recalibrate. Provide a record of calibration showing scales in compliance with ASTM C94 requirements. Check batching accuracy of volumetric water batching devices at least every 90 Days. Check batching accuracy of chemical admixture dispensing devices at least every 6 mo. Perform daily checks as necessary to ensure measuring accuracy.

3.1.2. **Volumetric Mixers**. Provide volumetric mixers with rating plates defining the capacity and the performance of the mixer in accordance with the Volumetric Mixer Manufacturers Bureau or equivalent. Provide volumetric mixers that comply with ASTM C685. Provide test data showing mixers meet the uniformity test requirements of Tex-472-A.

Volumetric truck (auger) mixers may not supply classes of concrete identified as structural concrete in Table 8.

3.1.3. **Agitators and Truck and Stationary Mixers**. Provide stationary and truck mixers capable of combining the ingredients of the concrete into a thoroughly mixed and uniform mass and capable of discharging the concrete so at least 5 of the 6 requirements of Tex-472-A are met.

Perform concrete uniformity tests on mixers or agitators in accordance with Tex-472-A to resolve issues of mix uniformity and mixer performance.

Perform the mixer or agitator uniformity test at the full rated capacity of the equipment. Remove all equipment that fails the uniformity test from service.

Inspect and maintain mixers and agitators. Keep them free of concrete buildup, and repair or replace worn or damaged blades or fins.

Ensure all mixers have a plate affixed showing manufacturer's recommended operating speed and rated capacity for mixing and agitating.

3.2. **Hauling Equipment.** Provide hauling equipment capable of maintaining the mixed concrete in a thoroughly mixed and uniform mass, and discharging the concrete with a satisfactory degree of uniformity.

Provide equipment with smooth, mortar-tight metal containers equipped with gates that prevent accidental discharge of the concrete when using non-agitating equipment for transporting concrete.

Maintain hauling equipment clean and free of built-up concrete.

3.3. **Testing Equipment.** Furnish and maintain the following in accordance with the pertinent test procedure

- sieves necessary to perform aggregate gradation analysis when optimized aggregate gradation is specified,
- equipment necessary to perform Tex-415-A and Tex-422-A,
- equipment necessary to perform Tex-409-A, or Tex-425-A,
- test molds,
- curing facilities,
- maturity meters if used, and
- wheelbarrow or other container acceptable for the sampling of the concrete.

Provide strength-testing equipment when required in accordance with the Contract-controlling test.

4. CONSTRUCTION

4.1. **Classification of Concrete Mix Designs.** Provide classes of concrete meeting the requirements shown in Table 8.

A higher-strength class of concrete with equal or lower water-to-cementitious material ratio may be substituted for the specified class of concrete, when approved.

4.2. **Mix Design Proportioning.** Furnish mix designs using ACI 211, Tex-470-A, or other approved procedures for the classes of concrete listed in Table 8. Perform mix design proportioning by absolute volume method. Perform cement replacement using equivalent weight method.

Do not exceed the maximum water-to-cementitious material ratio listed in Table 8 when designing the mixture.

4.2.1. **Cementitious Materials.** Do not exceed 700 lb. of cementitious material per cubic yard of concrete.

- Use cement of the same type and from the same source for monolithic placements.
- Do not use supplementary cementing materials when white hydraulic cement is specified.

Table 8

Concrete Classes

Class of Concrete	Design Strength[1] ,Min. f'_c (psi)	Maximum w/cm Ratio	Coarse Aggregate Grades[2,3,4]	Cement Types	Mix Design Options	Exceptions to Mix Design Options	General Usage[5]
A	3,000	0.60	1–4, 8	I, II, I/II, IL, IP, IS, IT, V	1, 2, 4, & 7	■ When the cementitious material content does not exceed 520 lb./cu. yd., Class C fly ash may be used instead of Class F fly ash.	Inlets, manholes, curb, gutter, curb & gutter, conc. retards, sidewalks, driveways, back-up walls, anchors, non-reinforced drilled shafts
B	2,000	0.60	2–7				Riprap, traffic signal controller foundations, small roadside signs, and anchors
C[6]	3,600	0.45	1–6	I, II, I/II, IP, IS, IT[7], V	1-8		Drilled shafts, bridge substructure, bridge railing, culverts except top slab of direct traffic culverts, headwalls, wing walls, approach slabs, inlets, manholes, concrete traffic barrier (cast-in-place)
E	3,000	0.50	2–5	I, II, I/II, IL, IP, IS, IT[7], V	1-8	■ When the cementitious material content does not exceed 520 lb./cu. yd., Class C fly ash may be used instead of Class F fly ash.	Seal concrete
F[6]	Note 8	0.45	2–5	I, II, I/II, IP, IS, IT[7],V			Railroad structures; occasionally for bridge piers, columns, or bents

Class of Concrete	Design Strength[1] ,Min. f'_c (psi)	Maximum w/cm Ratio	Coarse Aggregate Grades[2,3,4]	Cement Types	Mix Design Options	Exceptions to Mix Design Options	General Usage[5]
H[6]	Note 8[7]	0.45	3–6	I, II, I/II, III, IP, IS, IT[7], V	1-5	■ Do not use Type III cement in mass placement concrete. ■ Up to 20% of blended cement may be replaced with listed SCMs when Option 4 is used for precast concrete.	Precast concrete, post-tension members
S[6]	4,000	0.45	2–5	I, II, I/II, IP, IS, IT[7],V	1-8		Bridge slabs, top slabs of direct traffic culverts
CO[6]	4,600	0.40	6	I, II, I/II, IP, IS, IT[7], V	1-8		Bridge deck concrete Overlay
LMC[6]	4,000	0.40	6–8				Latex-modified concrete overlay
SS[6]	3,600	0.45	4–6			■ Use a minimum cementitious material content of 658 lb./cu. yd. of concrete.	Slurry displacement shafts, underwater drilled shafts

Class of Concrete	Design Strength[1] ,Min. f'_c (psi)	Maximum w/cm Ratio	Coarse Aggregate Grades[2,3,4]	Cement Types	Mix Design Options	Exceptions to Mix Design Options	General Usage[5]
K[6]	Note 8	0.40	Note 8	I, II, I/II, III IP, IS, IT[7], V			Note 8

Class of Concrete	Design Strength[1] ,Min. f'_c (psi)	Maximum w/cm Ratio	Coarse Aggregate Grades[2,3,4]	Cement Types	Mix Design Options	Exceptions to Mix Design Options	General Usage[5]
HES	Note 8	0.45	Note 8	I, IL, II, I/II, III		■ Mix design options do not apply. ■ 700 lb. of cementitious material per cu. yd. limit does not apply.	Concrete pavement, concrete pavement repair
"X"(HPC)[6,9,10]	Note 11	0.45	Note 11	I, II, I/II, III IP, IS, IT[7], V	1-5, & 8	■ Maximum fly ash replacement for option 1 and 3 may be increased to 45%. ■ Up to 20% of a blended cement may be replaced with listed SCMs for Option 4. ■ Do not use Option 8 for precast concrete.	
"X"(SRC)[6,9,10]	Note 11	0.45	Note 11	I/II, II, IP, IS, IT[7], V	1-4, & 7	■ Do not use Class C Fly Ash ■ Type III-MS may be used where allowed. ■ Type I and Type III cements may be used with Options 1-3, with a maximum w/cm of 0.40. ■ Up to 20% of blended cement may be replaced with listed SCMs when Option 4 is used for precast concrete. ■ Do not use Option 7 for precast concrete.	

Class of Concrete	Design Strength[1] ,Min. f'_c (psi)	Maximum w/cm Ratio	Coarse Aggregate Grades[2,3,4]	Cement Types	Mix Design Options	Exceptions to Mix Design Options	General Usage[5]

1. Design strength must be attained within 56 Days.
2. Do not use Grade 1 coarse aggregate except in massive foundations with 4 in. minimum clear spacing between reinforcing steel bars,. Do not use Grade 1 aggregate in drilled shafts.
3. Use Grade 8 aggregate in extruded curbs.
4. Other grades of coarse aggregate maybe used in non-structural concrete classes when allowed by TxDOT.
5. For information only.
6. Structural concrete classes.
7. Do not use Type IT cements containing >5% limestone.
8. As shown on the Design Documents or specified.
9. "X" denotes class of concrete shown on the Design Documents or specified.
10. (HPC): High Performance Concrete, (SRC): Sulfate Resistant Concrete.
11. Same as class of concrete shown on the Design Documents.

4.2.2. **Aggregates**. Recycled crushed hydraulic cement concrete may be used as a coarse or fine aggregate in Class A, B, D, and E concrete. Limit recycled crushed concrete fine aggregate to a maximum of 20% of the fine aggregate.

Use light-colored aggregates when white hydraulic cement is specified.

Use fine aggregate with an acid insoluble residue of at least 60% by weight when tested in accordance with Tex-612-J in all concrete subject to direct traffic.

Use the following equation to determine if the aggregate combination meets the acid insoluble residue requirement when blending fine aggregate or using an intermediate aggregate:

$$\frac{(A_1 \times P_1)+(A_2 \times P_2)+(A_{ia} \times P_{ia})}{100} \geq 60\%$$

Where:
A_1 = acid insoluble (%) of fine aggregate 1
A_2 = acid insoluble (%) of fine aggregate 2
A_{ia} = acid insoluble (%) of intermediate aggregate passing the 3/8" sieve
P_1 = percent by weight of fine aggregate 1 of the fine aggregate blend
P_2 = percent by weight of fine aggregate 2 of the fine aggregate blend
P_{ia} = percent by weight of intermediate aggregate passing the 3/8" sieve

Alternatively to the above equation, blend fine aggregate with a micro deval loss of less than 12%, when tested in accordance with Tex-461-A, with at least 40% of a fine aggregate with an acid insoluble residue of at least 60%.

4.2.3. **Chemical Admixtures**. Do not use Type C, Type E, Type F, or Type G admixtures in Class S bridge deck concrete. Do not use chemical admixtures containing calcium chloride in any concrete.

Use a 30% calcium nitrite solution when a corrosion-inhibiting admixture is required. The corrosion-inhibiting admixture must be set neutral. Dose the admixture at the rate of gallons of admixture per cubic yard of concrete shown on the Design Documents.

4.2.4. **Air Entrainment**. Use an approved air-entraining admixture when air-entrained concrete is specified, or when an air-entraining admixture is used at Developer's option, and do not exceed the manufacturer's recommended dosage. Ensure the minimum entrained air content is at least 3.0% for all classes of concrete when air-entrained concrete is specified, during trial batch, or when providing previous field data.

4.2.5. **Slump**. Provide concrete with a slump in accordance with Table 9. When approved, the slump of a given concrete mix may be increased above the values shown in Table 9 using chemical admixtures, provided the admixture-treated concrete has the same or lower water-to-cementitious material ratio and does not exhibit segregation or excessive bleeding. Request approval to exceed the slump limits in Table 9 sufficiently in advance for proper evaluation.

Perform job control testing of slump in accordance with Item 421.4.8.3.1., "Job Control Testing."

Table 9

Placement Slump Requirements

General Usage[1]	Placement Slump Range[2], inches
Walls (over 9 in. thick), caps, columns, piers, approach slabs, concrete overlays	3 to 5
Bridge slabs, top slabs of direct traffic culverts, latex-modified concrete for bridge deck overlays	3 to 5-1/2
Inlets, manholes, walls (less than 9 in. thick), bridge railing, culverts, concrete traffic barrier, concrete pavement (formed), seal concrete	4 to 5-1/2
Precast concrete	4 to 9
Underwater concrete placements	6 to 8-1/2
Drilled shafts, slurry displaced and underwater drilled shafts	See Item 416, "Drilled Shaft Foundations."
Curb, gutter, curb and gutter, concrete retards, sidewalk, driveways, anchors, riprap, small roadside sign foundations, concrete pavement repair, concrete repair	As approved

1. For information only.
2. For fiber reinforced concrete, perform slump before addition of fibers.

4.2.6. **Mix Design Options**.

4.2.6.1. **Option 1**. Replace 20% to 35% of the cement with Class F fly ash.

4.2.6.2. **Option 2**. Replace 35% to 50% of the cement with slag cement or MFFA.

4.2.6.3. **Option 3**. Replace 35% to 50% of the cement with a combination of Class F fly ash, slag cement, MFFA, UFFA, metakaolin, or silica fume; however, no more than 35% may be fly ash, and no more than 10% may be silica fume.

4.2.6.4. **Option 4**. Use Type IP, Type IS, or Type IT cement as allowed in Table 5 for each class of concrete. Up to 10% of a Type IP, Type IS, or Type IT cement may be replaced with Class F fly ash, slag cement, or silica fume. Use no more than 10% silica fume in the final cementitious material mixture if the Type IT cement contains silica fume, and silica fume is used to replace the cement.

4.2.6.5. **Option 5**. Replace 35% to 50% of the cement with a combination of Class C fly ash and at least 6% of silica fume, UFFA, or metakaolin. However, no more than 35% may be Class C fly ash, and no more than 10% may be silica fume.

4.2.6.6. **Option 6**. Use a lithium nitrate admixture at a minimum dosage determined by testing conducted in accordance with Tex-471-A, "Lithium Dosage Determination Using Accelerated Mortar Bar Testing." Before use of the mix, provide an annual certified test report signed and sealed by a Registered Professional Engineer, from a laboratory on TxDOT's List of Approved Lithium Testing Laboratories, certified by TxDOT as being capable of testing according to Tex-471-A, "Lithium Dosage Determination Using Accelerated Mortar Bar Testing."

4.2.6.7. **Option 7**. Ensure the total alkali contribution from the cement in the concrete does not exceed 3.5 lb. per cubic yard of concrete when using hydraulic cement not containing SCMs calculated as follows:

$$\text{lb. alkali per cu. yd.} = \frac{(\text{lb. cement per cu. yd.}) \times (\%\ \text{Na}_2\text{O equivalent in cement})}{100}$$

4.2.6.8. **Option 8**. Perform annual testing as required for any deviations from Options 1–5 or use mix design options listed in Table 10. Laboratories performing ASTM C1260, ASTM C1567, and ASTM C1293 testing must be listed on TxDOT's List of Approved ASTM C1260 Laboratories. Before use of the mix, provide a certified test report signed and sealed by a Registered Professional Engineer demonstrating the proposed mixture conforms to the requirements of Table 10.

Provide a certified test report signed and sealed by a Registered Professional Engineer, when HPC is required, and less than 20% of the cement is replaced with SCMs, demonstrating ASTM C1202 test results indicate the permeability of the concrete is less than 1,500 coulombs tested immediately after either of the following curing schedules:

- Moisture cure specimens 56 Days at 73ºF.
- Moisture cure specimens 7 Days at 73ºF followed by 21 Days at 100ºF.

Table 10

Option 8 Testing and Mix Design Requirements

Scenario	ASTM C1260 Result		Testing Requirements for Mix Design Materials or Prescriptive Mix Design Options[1]
	Mix Design Fine Aggregate	Mix Design Coarse Aggregate	
A	> 0.10%	> 0.10%	■ Determine the dosage of SCMs needed to limit the 14-Day expansion of each aggregate[2] to 0.08% when tested individually in accordance with ASTM C1567, or ■ Use a minimum of 40% Class C fly ash with a maximum CaO[3] content of 25%.
B	≤ 0.10%	≤ 0.10%	■ Use a minimum of 40% Class C fly ash with a maximum CaO[3] content of 25%, or ■ Use any ternary combination which replaces 35% to 50% of cement.
	≤ 0.10%	ASTM C 1293 1 yr. Expansion ≤ 0.04%	■ Use a minimum of 20% of any Class C fly ash, or ■ Use any ternary combination which replaces 35% to 50% of cement.
C	≤ 0.10%	> 0.10%	■ Determine the dosage of SCMs needed to limit the 14-Day expansion of coarse and intermediate[2] aggregate to 0.08% when tested individually in accordance with ASTM C1567, or ■ Use a minimum of 40% Class C fly ash with a maximum CaO[3] content of 25%.
D	> 0.10%	≤ 0.10%	■ Use a minimum of 40% Class C fly ash with a maximum CaO[3] content of 25%, or ■ Use any ternary combination which replaces 35% to 50% of cement.
	> 0.10%	ASTM C1293 1 yr. Expansion ≤ 0.04%	■ Determine the dosage of SCMs needed to limit the 14-Day expansion of fine aggregate to 0.08% when tested in accordance with ASTM C1567.

1. Do not use Class C fly ash if the ASTM C1260 value of the fine, intermediate, or coarse aggregate is 0.30% or greater, unless the fly ash is used as part of a ternary system.
2. Intermediate size aggregates shall fall under the requirements of mix design coarse aggregate.
3. Average the CaO content from the previous ten values as listed on the mill certificate.

4.2.7. **Optimized Aggregate Gradation (OAG) Concrete**. The gradation requirements in Table 3 and Table 4 do not apply when OAG concrete is specified or used by Developer. Use at least 420 lb. per cubic yard of cementitious material when OAG concrete is used. Use a coarse aggregate with a maximum nominal size not larger than:

- 1/5 the narrowest dimension between sides of forms, or
- 1/3 the depth of slabs, or
- 3/4 the minimum clear spacing between individual reinforcing bars or wires, bundles of bars, individual tendons, bundled tendons, or ducts.

Use Tex-470-A to establish an initial target cumulative gradation. Use the following criteria to select the initial target cumulative gradation:

- The Coarseness and Workability factors must plot within the workability box. Machine-placed concrete generally plots in the lower region of the workability box and hand-placed concrete generally plots in the upper region of the workability box.

- The percent retained on any sieve, excluding the first and last sieves that retain material, must be at least 5.0%.
- The sum of the percent retained on any two adjacent sieves, excluding the first and last sieves that retain material, must be at least 13.0%.
- The cumulative percent passing should generally follow the maximum density line on the 0.45 power chart and should not deviate beyond the maximum and minimum tolerance lines except as noted in Tex-470-A.

Make necessary adjustments to individual aggregate stockpile proportions during OAG concrete production when the cumulative combined percent passing deviates from the target cumulative gradation by more than the allowable tolerances listed in Table 11.

Table 11

Tolerances for Optimized Aggregate Gradation Concrete

Description	Allowable Tolerance
Cumulative % passing each sieve, 1/2" sieve and larger	± 5.0
Cumulative % passing each sieve, smaller than 1/2" and larger than No. 30 sieve	± 3.0
Cumulative % passing each sieve, No. 30 sieve and smaller	± 2.0

4.2.8. **Self-Consolidating Concrete (SCC)**. Provide SCC meeting the following requirements shown in Table 12 when approved for use in precast or drilled shaft concrete. Use concrete with a slump flow that can be placed without vibration and will not segregate or excessively bleed.

Increase the slump flow of a given concrete mix above the values shown in Table 12 when approved, provided the concrete has the same or lower water-to-cementitious material ratio and meets all other requirements listed in Table 12. Request approval to exceed the slump flow limits sufficiently in advance for proper evaluation.

Table 12

Mix Design Requirements for SCC

Tests	Test Method	Acceptable Limits
Slump Flow for Precast Concrete	ASTM C1611	22 to 27
Slump Flow for Drilled Shafts	ASTM C1611	19 to 24
T_{50}, sec	ASTM C1611	2 to 7
VSI Rating	ASTM C1611	0 or 1
Passing Ability, in.	ASTM C1621	≤ 2
Segregation Column, %	ASTM C1610	≤ 10
Bleeding, %	ASTM C232	≤ 2.5

4.3. **Concrete Trial Batches.** Perform preliminary and final trial batches when required by the Design Documents, or when previous satisfactory field data is not available. Submit previous satisfactory field data showing the proposed mix design conforms to specification requirements when trial batches are not required and before concrete is placed.

Perform preliminary and final trial batches for all self-consolidating concrete mix designs.

4.3.1. **Preliminary Trial Batches**. Perform all necessary preliminary trial batch testing when required, and provide documentation including mix design, material proportions, and test results substantiating the mix design conforms to specification requirements.

4.3.2. **Final Trial batches**. Make all final trial batches using the proposed ingredients in a mixer that is representative of the mixers to be used on the job when required. Make the batch size at least 50% of the mixer's rated capacity. Perform fresh concrete tests for air content and slump, and make, cure, and test strength specimens for compliance with specification requirements. Test at least one set of design strength specimens, consisting of two specimens per set, at 7-Day, 28-Day, and at least one additional age. Before placing, provide TxDOT the option of witnessing final trial batches, including the testing of the concrete.

Conduct all testing listed in Table 12 when performing trial batches for self-consolidating concrete. Make an additional mixture with 3% more water than the preliminary trial batch. Make necessary adjustments to the mix design if this additional mixture does not meet requirements of Table 12. Cast and evaluate mock-ups for precast concrete that are representative of the actual product. Provide TxDOT the option of witnessing final trial batches, including the testing of the concrete and the casting of the mock-ups before placement.

Establish 7-Day compressive strength target values using the following formula for each Class A, B, and E concrete mix designs to be used:

$$\text{Target value} = \text{Minimum design strength} \times \frac{\text{7-day avg. trial batch strength}}{\text{28-day avg. trial batch strength}}$$

Submit previous satisfactory field data, data from a new trial batch, or other evidence showing the change will not adversely affect the relevant properties of the concrete when changes are

made to the type, brand, or source of aggregates, cement, SCM, water, or chemical admixtures. Submit the data for approval before making changes to the mix design. A change in vendor does not necessarily constitute a change in materials or source. During concrete production, dosage changes of chemical admixtures used in the trial batches will not require a re-evaluation of the mix design.

Developer has the option of performing trial batches in conjunction with concrete placements except for SCC mixtures, when new trial batches are required during the course of the Project.

Establish the strength–maturity relationship in accordance with Tex-426-A when the maturity method is specified or permitted. When using the maturity method, any changes in any of the ingredients, including changes in proportions, shall require the development of a new strength–maturity relationship for the mix.

4.3.3. **Mix Design of Record**. Once a trial batch or previously satisfactory field data substantiates the mix design, the proportions and mixing methods used become the mix design of record. Do not exceed mix design water-to-cement ratio.

4.4. **Production Testing.**

4.4.1. **Aggregate Moisture Testing**. Determine moisture content per Tex-409-A or Tex-425-A for coarse, intermediate, and fine aggregates at least twice a week, when there is an apparent change, or for new shipments of aggregate. When aggregate hoppers or storage bins are equipped with properly maintained electronic moisture probes for continuous moisture determination, moisture tests per Tex-409-A or Tex-425-A are not required. Electronic moisture probes, however, must be verified at least every 90 Days against Tex-409-A and be accurate to within 1.0% of the actual moisture content.

When producing SCC, and when aggregate hoppers or storage bins are not equipped with electric moisture probes, determine the moisture content of the aggregates before producing the first concrete batch each Day. Thereafter, determine the moisture content every four hours or when there is an apparent change while SCC is being produced.

4.4.2. **Aggregate Gradation Testing**. Perform a sieve analysis in accordance with Tex-401-A on each stockpile used in the blend at least one Day before producing OAG concrete when producing optimized aggregate gradation concrete. Perform sieve analysis on each stockpile after every 10,000 cubic yards of OAG concrete produced. Provide sieve analysis data to TxDOT.

4.5. **Measurement of Materials.**

4.5.1. **Non-Volumetric Mixers**. Measure aggregates by weight. Correct batch weight measurements for aggregate moisture content. Measure mixing water, consisting of water added to the batch, ice added to the batch, water occurring as surface moisture on the aggregates, and water introduced in the form of admixtures, by volume or weight. Measure ice by weight. Measure cement and supplementary cementing materials in a hopper and on a separate scale from those used for other materials. Measure the cement first when measuring the cumulative weight. Measure concrete chemical admixtures by weight or volume. Measure batch materials within the tolerances of Table 13.

Table 13

Mix Design Batching Tolerances—Non-Volumetric Mixers

Material	Tolerance (%)
Cement, wt.	-1 to +3
SCM, wt.	-1 to +3
Cement + SCM (cumulative weighing), wt.	-1 to +3
Water, wt. or volume	±3
Fine aggregate, wt.	±2
Coarse aggregate, wt.	±2
Fine + coarse aggregate (cumulative weighing), wt.	±1
Chemical admixtures, wt. or volume	±3

Ensure the quantity measured, when measuring cementitious materials at less than 30% of scale capacity, is accurate to not less than the required amount and not more than 4% in excess. Ensure the cumulative quantity, when measuring aggregates in a cumulative weigh batcher at less than 30% of the scale capacity, is measured accurate to ±0.3% of scale capacity or ±3% of the required cumulative weight, whichever is less.

Measure cement in number of bags under special circumstances when approved. Use the weights listed on the packaging. Weighing bags of cement is not required. Ensure fractional bags are not used except for small hand-mixed batches of approximately 5 cu. ft. or less and when an approved method of volumetric or weight measurement is used.

4.5.2. **Volumetric Mixers**. Provide an accurate method of measuring all ingredients by volume, and calibrate equipment to assure correct measurement of materials within the specified tolerances. Base tolerances on volume–weight relationship established by calibration, and measure the various ingredients within the tolerances of Table 14. Correct batch measurements for aggregate moisture content.

Table 14

Mix Design Batching Tolerances—Volumetric Mixers

Material	Tolerance
Cement, wt. %	0 to +4
SCM, wt. %	0 to +4
Fine aggregate, wt. %	±2
Coarse aggregate, wt. %	±2
Admixtures, wt. or volume %	±3
Water, wt. or volume %	±1

4.6. **Mixing and Delivering Concrete.**

4.6.1. **Mixing Concrete**. Operate mixers and agitators within the limits of the rated capacity and speed of rotation for mixing and agitation as designated by the manufacturer of the equipment. Provide concrete in a thoroughly mixed and uniform mass with a satisfactory degree of uniformity when tested in accordance with Tex-472-A.

Do not top-load new concrete onto returned concrete.

Adjust mixing times and batching operations as necessary when the concrete contains silica fume to ensure the material is completely and uniformly dispersed in the mix. The dispersion of the silica fume within the mix will be verified by TxDOT, using cylinders made from trial batches. Make necessary changes to the batching operations, if uniform dispersion is not achieved, until uniform and complete dispersion of the silica fume is achieved.

Mix concrete by hand methods or in a small motor-driven mixer when permitted, for small placements of less than 2 cu. yd. For such placements, proportion the mix by volume or weight.

4.6.2. **Delivering Concrete**. Deliver concrete to the Project in a thoroughly mixed and uniform mass, and discharge the concrete with a satisfactory degree of uniformity. Conduct testing in accordance with Tex-472-A when there is a reason to suspect the uniformity of concrete.

Maintain concrete delivery and placement rates sufficient to prevent cold joints.

Adding chemical admixtures or the portion of water withheld is only permitted at the jobsite to adjust the slump or slump flow of the concrete. Do not add water or chemical admixtures to the batch after more than an amount needed to conduct slump testing has been discharged. Turn the drum or blades at least 30 additional revolutions at mixing speed to ensure thorough and uniform mixing of the concrete. When this water is added, do not exceed the approved mix design water-to-cementitious material ratio.

Before unloading, furnish the delivery ticket for the batch of concrete containing the information required on TxDOT Form 596, “Concrete Batch Ticket.” Verify all required information is provided on the delivery tickets. Suspend concrete operations until the corrective actions are

implemented if delivery tickets do not provide the required information. Verify the design water-to-cementitious material ratio is not exceeded.

Begin the discharge of concrete delivered in truck mixers within the times listed in Table 15. Concrete may be discharged after these times provided the concrete temperature and slump meet the requirements listed in this Item and other pertinent Items. Perform these tests with certified testing personnel per Item 421.4.8.1., "Certification of Testing Personnel." Provide TxDOT the option of witnessing testing of the concrete.

Table 15

Concrete Discharge Times

Fresh Concrete Temperature, °F	Max. time after batching for concrete not containing Type B or D admixtures, min.	Max. time after batching for concrete containing Type B or D admixtures[1], min.
90 and above	45	75
75 ≤ T < 90	60	90
T < 75	90	120

13. Concrete must contain at least the minimum manufacturer's recommended dosage of Type B or D admixture.

4.7. **Placing, Finishing, and Curing Concrete.** Place, finish, and cure concrete in accordance with the pertinent Items.

4.8. **Sampling and Testing of Concrete.** All fresh and hardened concrete is subject to testing as follows:

4.8.1. **Certification of Testing Personnel**. Developer personnel performing testing must be either ACI-certified or qualified by a TxDOT-recognized equivalent written and performance testing program for the tests being performed. Personnel performing these tests are subject to TxDOT approval. Use of a commercial laboratory is permitted at Developer's option. All personnel performing testing using the maturity method must be qualified by a training program recognized by TxDOT before using this method on the job.

4.8.2. **Fresh Concrete**. Provide safe access and assistance during sampling. Fresh concrete shall be sampled for testing at the discharge end if using belt conveyors or pumps. When it is impractical to sample at the discharge end, a sample shall be taken at the time of discharge from the delivery equipment and correlation testing shall be performed and documented to ensure specification requirements are met at the discharge end.

4.8.3. **Testing of Fresh Concrete**. Test for the fresh properties listed in Table 16.

Table 16

Fresh Concrete Tests

Tests	Test Methods
Slump[1]	Tex-415-A
Temperature[1]	Tex-422-A
Air Content[2]	Tex-414-A, Tex-416-A or ASTM C457

1. Job-control testing performed by Developer.
2. Only required during concrete trial batch when air-entrained concrete is specified on the Design Documents.

Concrete with a slump lower than the minimum placement slump in Table 9 after the addition of all water withheld, or concrete exhibiting segregation and excessive bleeding may be rejected.

When SCC exceeds the maximum placement slump flow or VSI rating, immediately resample and retest the concrete slump flow and VSI rating. If the concrete exceeds the maximum placement slump flow or VSI rating after the retest, the concrete shall be rejected.

4.8.3.1. **Job-Control Testing**. Perform job-control concrete temperature and slump testing as specified in Table 17. Provide TxDOT the opportunity to witness the testing. Immediately notify TxDOT of any concrete temperature or slump nonconformity issues. Furnish a copy of all test results to TxDOT daily.

Table 17

Job-Control Testing Frequencies

Concrete Placements	Frequency
Bridge Deck Placements	Test the first few loads, then every third load delivered.
All Other Structural Class Concrete Placements	One test every 60 cu. yd. or fraction thereof.
Non-Structural Class Concrete Placements	One test every 180 cu. yd. or fraction thereof.

Immediately resample and retest the concrete slump when the concrete exceeds the slump range at time of placement. If the concrete exceeds the slump range after the retest, and is used at Developer's option, Developer shall make strength specimens as specified in Item 421.5., "Acceptance of Concrete" and report results to TxDOT.

4.8.3.2. **Strength Specimen Handling**. Remove specimens from their molds and deliver TxDOT test specimens to curing facilities within 24 to 48 hr. after molding, in accordance with pertinent test procedures. Clean and prepare molds for reuse if necessary.

5. ACCEPTANCE OF CONCRETE

Sample and test the fresh and hardened concrete for acceptance. The test results shall be reported to Developer and the concrete Supplier. Investigate the quality of the materials, the

concrete production operations, and other possible problem areas to determine the cause for any concrete that fails to meet the required strengths as outlined below. Take necessary actions to correct the problem including redesign of the concrete mix. Resume concrete operations only after obtaining approval for any proposed corrective actions.

5.1. **Structural Concrete.** For concrete classes identified as structural concrete in Table 8, make and test 7-Day and 28-Day specimens. Acceptance shall be based on attaining the design strength given in Table 8.

5.2. **Not Used.**

5.3. **All Other Concrete.** For concrete classes not identified as structural concrete in Table 8, make and test 7-Day specimens. Acceptance on the 7-Day target value shall be established in accordance with Item 421.4.3., "Concrete Trial Batches."

Item 422

14. Concrete Superstructures

1. DESCRIPTION

Construct reinforced concrete bridge slabs, decks, flat slabs, slab and girder units (pan formed), approach slabs, or other bridge superstructure Elements as indicated.

2. MATERIALS

2.1. **Concrete.** Provide concrete conforming to Item 421, "Hydraulic Cement Concrete." Provide Class S or S (HPC) concrete for all cast-in-place concrete. Provide the class of concrete for precast components indicated on the Design Documents or in pertinent governing Items.

2.2. **Reinforcing Steel.** Provide reinforcing steel in accordance with Item 440, "Reinforcement for Concrete."

2.3. **Structural Grout.** Provide grout in accordance with DMS-4675, "Cementitious Grouts and Mortars for Miscellaneous Applications."

2.4. **Expansion Joint Material.** Provide materials in accordance with DMS-6310, "Joint Sealants and Fillers."

- Provide preformed bituminous fiber expansion joint material.
- Provide a Class 4, 5, or 7 low-modulus silicone sealant.
- Provide asphalt board that conforms to dimensions shown on the Design Documents.
- Provide re-bonded neoprene filler that conforms to the dimensions shown on the Design Documents.

2.5. **Foam Bedding Strips for Prestressed Concrete Panels.** Use extruded polystyrene conforming to ASTM C578, Type VI (40 psi compressive strength).

Provide a manufacturer's certification or data sheet stating the foam meets these requirements. Use an adhesive or bonding agent compatible with polystyrene as recommended by the polystyrene manufacturer.

2.6. **Evaporation Retardants.** Provide evaporation retardants in accordance with DMS-4650, "Hydraulic Cement Concrete Curing Materials and Evaporation Retardants."

2.7. **Curing Materials.** Provide membrane curing compounds in accordance with DMS-4650, "Hydraulic Cement Concrete Curing Materials and Evaporation Retardants."

Provide cotton mats that consist of a filling material of cotton "bat" or "bats" (at least 12 oz. per square yard) completely covered with unsized cloth (at least 6 oz. per square yard) stitched longitudinally with continuous parallel rows of stitching spaced at less than 4 in., or tuft both longitudinally and transversely at intervals less than 3 in. Provide cotton mats that are free from tears and in good general condition. Provide a flap at least 6 in. wide consisting of 2 thicknesses of the covering and extending along one side of the mat.

Provide polyethylene sheeting that is at least 4 mils thick and free from visible defects. Provide opaque white sheeting when the ambient temperature during curing exceeds 90°F.

Provide burlap-polyethylene mats made from burlap impregnated on one side with a film of opaque white pigmented polyethylene, free from visible defects. Provide laminated mats that have at least one layer of an impervious material such as polyethylene, vinyl plastic, or other acceptable material (either as a solid sheet or impregnated into another fabric) and are free of visible defects.

Provide burlap material which complies with AASHTO M 182, Class 3 (10 oz. per square yard) with the following additions:

Manila hemp may also be used to make burlap.

Do not use burlap fabricated from bags.

Do not use burlap containing any water soluble ingredient which will retard the setting time of concrete.

Provide used burlap complying with the requirements stated above, and that only has been used previously for curing concrete. "Like new" cleanliness is not expected, but contamination with any substance foreign to the concrete curing process, such as grease or oil, shall be cause for rejection.

2.8. **Epoxy.** Provide epoxy materials that conform to DMS-6100, “Epoxy and Adhesives”.

3. EQUIPMENT

3.1. **Fogging Equipment.** Use fogging equipment that can apply water in a fine mist, not a spray. Produce the fog using equipment that pumps water or water and air under high pressure through a suitable atomizing nozzle. Use hand-held mechanical equipment portable enough to use in the direction of any prevailing wind and adaptable for intermittent use to prevent excessive wetting of the concrete.

3.2. **Transporting and Placing Equipment.** Use appropriate transporting and placing equipment such as buckets, chutes, buggies, belt conveyors, pumps, or other equipment as necessary. Do not transport or convey concrete through equipment made of aluminum. Use carts with pneumatic tires for carting or wheeling concrete over newly placed slabs.

Use tremies that are watertight to control the fall of concrete and of large enough diameter to allow the placement of the concrete but less than 14 in. in diameter.

Use pumps with lines at least 5 in. inside diameter (I.D.) where Grade 2 or smaller coarse aggregate is used and at least 8 in. I.D. for Grade 1 coarse aggregate.

3.3. **Vibrators.** Use immersion-type vibrators for consolidation of concrete. Provide at least 1 standby vibrator for Emergency use.

3.4. **Screeds and Work Bridges for Bridge Slabs.** Use a self-propelled transverse screed or a mechanical longitudinal screed for bridge slabs. Use transverse screeds that are able to follow the skew of the bridge for skews greater than 15°. Equip transverse screeds with a pan float. Manually operated screeding equipment may be used if approved for top slabs of culverts, small placements, or unusual conditions. Use screeds that are rigid and heavy enough to hold true to shape and have sufficient adjustments to provide for the required camber or section. Equip the screeds, except those of the roller drum type, with metal cutting edges.

Use sufficient work bridges for finishing operations for bridge slabs. Mount a carpet drag to a work bridge or a moveable support system that can vary the area of carpet in contact with the concrete. Use carpet pieces long enough to cover the entire width of the placement. Splice or overlap the carpet as necessary. Ensure enough carpet is in contact longitudinally with the concrete being placed to provide the desired surface finish. Use artificial grass-type carpeting with a molded polyethylene pile face with a blade length between 5/8 and 1 in. and minimum weight of 70 oz. per square yard. Ensure the carpet has a strong, durable backing not subject to rot and the facing is adequately bonded to the backing to withstand the intended use. A burlap drag, attached to the pan float on a transverse screed, may be used instead of the carpet drag.

3.5. **Temperature Recording Equipment.** Use strip chart temperature recording devices, recording maturity meters in accordance with Tex-426-A, or other approved devices that are accurate within ±2°F within the range of 32°F to 212°F.

3.6. **Artificial Heating Equipment.** Use artificial heating equipment as necessary for maintaining the concrete temperatures as specified in Item 422.4.6.11., "Placing Concrete in Cold Weather."

3.7. **Sawing Equipment.** Use sawing equipment capable of cutting grooves in completed bridge slabs and top slabs of direct traffic culverts. Provide grooves that are 1/8 to 3/16 in. deep, nominally 1/8 in. wide, and spaced at 1 in. Use sawing equipment capable of cutting grooves in hardened concrete within 18 in. of the barrier rail or curb.

3.8. **Spraying Equipment.** Use mechanically powered pressure sprayers, either air or airless, with appropriate atomizing nozzles for the application of membrane curing. Mechanically driven spraying equipment, adaptable to the rail system used by the screeds, may be used for applying membrane curing to bridge slabs. Use hand-pressurized spray equipment equipped with 2 or 3 fan-spray nozzles if approved. Ensure the spray from each nozzle overlaps the spray from adjacent nozzles by approximately 50%.

3.9. **Concrete Testing Equipment.** Provide testing equipment in accordance with Item 421.3.3., "Testing Equipment."

4. CONSTRUCTION

Obtain approval for proposed construction methods before starting Work. Approval of construction methods and equipment does not relieve Developer's responsibility for safety or correctness of methods, adequacy of equipment, or completion of Work in full accordance with the Contract. Attend the pre-construction (pre-pour) meetings for bridge slabs conducted by Deveoper. Provide and obtain approval for proposed finishing methods, interim curing methods, and final curing methods.

It is Developer's option to perform testing on structural concrete (structural classes of concrete are identified in Table 8 of Item 421.4.1., "Classification of Concrete Mix Designs,") to determine the in-situ strength to address the schedule restrictions listed below. TxDOT may require Developer to perform this testing for concrete placed in cold weather. Make enough test specimens for Developer-performed testing to ensure strength requirements are met for the operations listed below. Make at least 1 set of test specimens for each Element cast each Day. Cure these specimens under the same conditions as the portion of the structure involved for all stages of construction. Ensure safe handling, curing, and storage of all test specimens. Provide testing personnel, and sample and test the hardened concrete in accordance with Item 421.4.8., "Sampling and Testing of Concrete." The maturity method, Tex-426-A, may be used for in-situ

strength determination for schedule restrictions if approved. Coring not allowed for in-situ strength determination for schedule restrictions. Provide TxDOT the opportunity to witness all testing operations. Report all test results to TxDOT.

4.1. Schedule Restrictions and Inspection Hold-Points.

4.1.1. **Placement of Superstructure Members**. Place or cast superstructure members after the substructure concrete has attained a compressive strength of 3,000 psi.

4.1.2. **Longitudinal Screeding of Bridge Slabs**. Place a longitudinal screed directly on previously placed concrete slabs to check and grade an adjacent slab only after the previously placed slab has aged at least 24 hr. Place and screed the concrete after the previously placed slabs have aged at least 48 hr. Maintain curing of the previously placed slabs during placement.

4.1.3. **Staged Placement of Bridge Slabs on Continuous Steel Units**. Ensure the previously placed concrete attains a compressive strength of 3,000 psi when staged placement of a slab is required or used before placing the next stage placement. Multiple stages may be placed in a single Day if approved by the engineer of record.

4.1.4. **Storage of Materials on the Structure**. Obtain approval to store materials on completed portions of a structure once a compressive strength of 3,000 psi has been attained. Maintain proper curing if materials will be stored on structures before completion of curing.

4.1.5. **Placement of Equipment and Machinery**. Do not place erection equipment or machinery on the structure until the concrete has attained the design strength specified in Item 421.4.1., "Classification of Concrete Mix Designs."

4.1.6. **Carting of Concrete** Cart, wheel, or pump concrete over completed slabs after the completed concrete has attained a compressive strength of 3,000 psi. Maintain curing during these operations.

4.1.7. **Placing Bridge Rails**. Reinforcing steel and concrete for bridge rails may be placed on bridge slabs once the slab concrete has attained a compressive strength of 3,000 psi. Ensure the slab concrete has attained its design strength specified in Item 421.4.1., "Classification of Concrete Mix Designs," before placing railing concrete if slipforming methods are used for railing concrete.

4.1.8. **Opening to Construction Traffic**. Bridges may be opened to all construction traffic when the design strength specified in Item 421.4.1., "Classification of Concrete Mix Designs," has been attained if curing is maintained. Avoid crossing bridges at high speeds until railing concrete, if present, has attained a compressive strength of 3,000 psi.

4.1.9. **Opening to Full Traffic**. Bridges may be opened to the traveling public when the design strength specified in Item 421.4.1., "Classification of Concrete Mix Designs," has been attained for all structural Elements including railing subject to impact from traffic and when curing has been completed for all slabs. Obtain approval before opening bridges to the traveling public.

4.1.10. **Inspection Hold-Points**.

- Beam erection and bracing
- Formwork, including setting of precast panels
- Placing reinforcing steel
- Screed dry run and pre-pour clear cover checks
- Attend pre-pour meeting conducted by Developer

- Post-curing crack inspection

4.2. **Forms.** Submit Construction Documents for forms for decks or slabs on beams or girders, overhangs, cast-in-place spans, and bracing systems for girders when the overhang exceeds 3 ft. 6 in. Submit similar Construction Documents for other units of the superstructure. Show all essential details of proposed forms and bracing. Have a Registered Professional Engineer design, seal, and sign these Construction Documents. TxDOT approval is not required, but TxDOT reserves the right to request modifications to the Construction Documents. Developer is responsible for the adequacy of these Construction Documents.

Design job-fabricated formwork assuming a weight of 150 pcf for concrete, and include a liveload allowance of 50 psf of horizontal surface of the form. Do not exceed 125% of the allowable stresses used by TxDOT for the design of structures.

Use conventional forms, permanent metal deck forms, or prestressed concrete panels for slabs on beams or girders. Use permanent metal deck forms or conventional forms for thickened slabs, diaphragms, or other regions as shown on the Design Documents where prestressed concrete panels are not used. Provide prestressed concrete panels as shown on the Design Documents and in accordance with Item 424, "Precast Concrete Structural Members (Fabrication)." Provide copies of the precast panel layout drawings from the panel fabricator.

Use only material that is inert, non-biodegradable, and nonabsorptive for forms to be left in place.

Overhang form supports that transmit a horizontal force to a steel girder or beam or to a prestressed concrete beam are permitted provided a satisfactory structural analysis has been made of the effect on the girder or beam as indicated in the submitted formwork Construction Documents.

Use beam bracing as indicated on the Construction Documents when overhang brackets are used on prestressed concrete beam spans with slab overhangs not exceeding 3 ft. 6 in. Provide and design additional support or bracing for the outside beams regardless of the type of beam used for spans with overhangs exceeding this amount.

Punch or drill holes full size in the webs of steel members for support of overhang brackets or torch-cut them to 1/4 in. under size and ream them full size. Do not burn the holes full size. Leave the holes open. Never fill the holes by welding.

Attachment of forms or screed supports for bridge slabs to steel I-beams or girders may be by welding subject to the following requirements:

- Do not weld to tension flanges or to areas indicated on the Design Documents.
- Weld in accordance with Item 448, "Structural Field Welding."

When setting forms of any type take into account:

- deflections due to cast-in-place slab concrete and railing shown in the dead load deflection diagram,
- differential beam or girder deflections due to skew angles and the use of certain stay-in-place slab forming systems, and
- deflection of the forming system due to the wet concrete.

Securely stake forms to line and grade and maintain in position for bridge approach slabs. Rigidly attach inside forms for curbs to the outside forms.

Construct all forms to permit their removal without marring or damaging the concrete. Clean all forms and footing areas of any extraneous matter before placing concrete. Provide openings in forms if needed for the removal of laitance or foreign matter.

Treat the facing of all forms with bond-breaking coating of composition that will not discolor or injuriously affect the concrete surface. Take care to prevent coating of the reinforcing steel.

Complete all preparatory Work before placing concrete.

4.2.1. **Precast Panels**. Profile each beam to determine the actual camber or sag of the beams before placing panels. Adjust the profile grade line, panel elevation, and bearing seat elevations as needed to obtain the required cover over the slab reinforcement and slab thickness. Make adjustments over suitable increments when a profile grade line adjustment is necessary, depending on span lengths, so the revised grade line will produce a uniform profile and good riding qualities. Obtain approval for the grade adjustments before placement. Consider actual beam camber in adjacent spans or slab placements when adjusting the grade line. Inspect each panel as they are set for any cracking during transit, storage, or handling. Refer to Item 424.4.3.1., "Defects and Breakage," for rejection criteria due to cracking.

4.2.2. **Permanent Metal Decking**. Submit signed and sealed design calculations in addition to the required formwork drawings. Design and install formwork in accordance with the Design Documents and formwork drawings. The Design Documents shall govern in cases where the Design Documents and the formwork drawings conflict.

4.2.3. **Conventional Forms**. Provide properly seasoned good-quality lumber free from imperfections that would affect its strength or impair the finished surface of the concrete. Provide timber or lumber that meets or exceeds the requirements for species and grade in the submitted formwork Construction Documents.

Maintain forms or form lumber that will be reused so that it stays clean and in good condition. Do not use any lumber that is split, warped, bulged, or marred or that has any defect that will produce inferior Work; remove such lumber from the Work.

Use plywood at least 3/4 in. thick. Place the grain of the face plies on plywood forms parallel to the span between the supporting studs or joists. Use plywood for forming surfaces that remain exposed that meets the requirements for B-B Plyform Class I or Class II Exterior of the U.S. Department of Commerce Voluntary Product Standard PS 1.

Space studs and joists so that the facing form material remains in true alignment under the imposed loads.

Place forms with the form panels symmetrically (long dimensions set in the same direction) for surfaces exposed to view and receiving only an ordinary surface finish as defined in Item 420.4.13., "Ordinary Surface Finish." Make horizontal joints continuous.

Make molding for chamfer strips or other uses of materials of a grade that will not split when nailed and can be maintained to a true line without warping. Dress wood molding on all faces. Fill

forms at all sharp corners and edges with triangular chamfer strips measuring 3/4 in. on the sides.

4.3. **Placing Reinforcement.** Place reinforcement as provided in Item 440, "Reinforcement for Concrete." Do not weld reinforcing steel supports to I-beams or girders or to reinforcing steel except where shown on the Design Documents.

4.4. **Drains.** Install and construct weep holes and roadway drains as shown on the Design Documents.

4.5. **Extending Existing Slabs.** Verify pertinent dimensions and elevations of the existing structure before ordering any required materials.

4.5.1. **Removal**. Remove portions of the existing structure to the lines and dimensions shown on the Design Documents. Dispose of these materials as shown on the Design Documents. Remove any metal railing without damaging it, and stack it neatly on the right of way at locations that do not interfere with traffic or construction or at locations shown on the Design Documents. All removed metal railing remains the property of TxDOT. Repair any portion of the remaining structure damaged as a result of the construction. Do not use explosives to remove portions of the existing structure. Do not use a demolition ball, other swinging weight, or impact equipment. Use pneumatic or hydraulic tools for final removal of concrete at the "break" line. Use removal equipment, as approved, that will not damage the remaining concrete.

4.5.2. **Reuse of Removed Portions of Structure**. Detach and remove all portions of the old structure that are to be incorporated into the extended structure to the lines and details as specified on the Design Documents. Move the unit to be reused to the new location specified using approved methods. Place the reinforcement and extension concrete according to the plan details.

4.5.3. **Breaking Back Bridge Slabs**. Saw the top surface of the slab for bridge slabs and direct traffic slabs of box culverts along the "break" line to a depth of 1/2 in. before breaking back. Do not cut the reinforcement at the "break" line. Sever the concrete at the "break" line. Do not damage the remaining reinforcement within 1 lap length of the "break" line during removal of the designated portion of the existing structure.

4.5.4. **Splicing Reinforcing Steel**. Splice new reinforcing bars to exposed bars in the existing structure using lap splices in accordance with Item 440, "Reinforcement for Concrete." The new reinforcing steel does not need to be tied to the existing steel where spacing or elevation does not match that of the existing steel provided the lap length is attained. Weld in accordance with Item 448, "Structural Field Welding," when welded splices are permitted. Install any required dowels in accordance with Item 422.4.6.10., "Installation of Dowels and Anchor Bolts."

4.5.5. **Concrete Preparation**. Roughen and clean concrete surfaces that are in contact with new construction before the placing of forms. Prepare these construction joint surfaces in accordance with Item 422.4.6.7., "Construction Joints."

4.6. **Placing Concrete.** Do not place concrete. Give sufficient advance notice before placing concrete in any unit of the structure to permit the final inspection of forms, reinforcing steel placement, and other preparations. Obtain approval for proposed curing methods based on forecast weather conditions for the expected duration of the pour and use the evaporation rate nomograph as mentioned below to determine the required curing options.

Follow the sequence of placing concrete shown on the Design Documents or specified.

Do not place concrete when impending weather conditions would impair the quality of the finished Work. Place concrete in early morning or at night or adjust the placement schedule for more favorable weather if conditions of wind, humidity, and temperature are such that concrete cannot be placed without the potential for plastic shrinkage cracking. Consult the evaporation rate nomograph in the Portland Cement Association's *Design and Control of Concrete Mixtures* or the evaporation rate spreadsheet available on TxDOT's website for shrinkage cracking potential. Adequately illuminate the entire placement site when mixing, placing, and finishing concrete in non-daylight hours as approved.

Furnish adequate shelter to protect the concrete against damage from rainfall or from freezing temperatures as outlined in this Item if changes in weather conditions require protective measures after Work starts. Continue operations during rainfall only if approved. Use protective coverings for the material stockpiles. Cover aggregate stockpiles only to the extent necessary to control the moisture conditions in the aggregates.

Allow at least 1 curing Day after the concrete has achieved initial set before placing strain on projecting reinforcement to prevent damage to the concrete.

4.6.1. **Placing Temperature**. Place superstructure concrete only when its temperature at the time of placement is between 50°F and 85°F. Increase the minimum placement temperature to 60°F if Ground Granulated Blast Furnace (GGBF) slag is used in the concrete.

4.6.2. **Transporting Time**. Begin the discharge of concrete delivered in truck mixers within the times listed in Table 15 of Item 421, "Hydraulic Cement Concrete."

4.6.3. **Workability of Concrete**. Place concrete with a slump as specified in Item 421.4.2.5., "Slump." Concrete that exceeds the maximum slump shall be immediately rejected. Water may be added to the concrete before discharging any concrete from the truck to adjust for low slump provided the maximum mix design water-cement ratio is not exceeded. Mix concrete after introduction of any additional water or chemical admixtures in accordance with Item 421.4.6., "Mixing and Delivering Concrete." Do not add water or chemical admixtures after any concrete has been discharged.

4.6.4. **Transporting Concrete**. Use a method and equipment capable of maintaining the rate of placement shown on the Design Documents or required by this Item to transport concrete to the forms. Transport concrete by buckets, chutes, buggies, belt conveyors, pumps, or other methods.

Protect concrete transported by conveyors from sun and wind to prevent loss of slump and workability. Shade or wrap with wet burlap pipes through which concrete is pumped as necessary to prevent loss of slump and workability.

Arrange and use chutes, troughs, conveyors, or pipes so the concrete ingredients will not be separated. Terminate such equipment in vertical downspouts, when necessary, to prevent segregation. Extend open troughs and chutes, if necessary, down inside the forms or through holes left in the forms.

Keep all transporting equipment clean and free from hardened concrete coatings. Discharge water used for cleaning clear of the concrete.

4.6.5. **Preparation of Surfaces**. Thoroughly wet all forms, prestressed concrete panels, T-beams, slab beams, and concrete box beams on which concrete is to be placed before placing concrete on them. Remove

any remaining puddles of excess water before placing concrete. Provide surfaces that are in a moist, saturated surface-dry condition when concrete is placed on them.

Ensure the subgrade or foundation is moist before placing concrete for bridge approach slabs.

4.6.6. **Expansion Joints**. Construct joints and devices to provide for expansion and contraction in accordance with plan details and the requirements of this Section and Item 454, "Bridge Expansion Joints."

Prevent bridging of concrete or mortar around expansion joint material in bearings and expansion joints.

Use forms adaptable to loosening or early removal in construction of all open joints and joints to be filled with expansion joint material. Loosen these forms as soon as possible after final concrete set to permit free movement of the span without requiring full form removal and avoid expansion or contraction damage to the adjacent concrete.

Provide preformed fiber joint material or a high density foam in the vertical joints of the roadway slab, curb, median, or sidewalk when the Design Documents show a Type A joint, and fill the top 1 in. with the specified joint sealing material. Install the sealer in accordance with Item 438, "Cleaning and Sealing Joints and Cracks (Rigid Pavement and Bridge Decks)," and the manufacturer's recommendations.

Use light wire or nails to anchor any preformed fiber joint material to the concrete on 1 side of the joint.

Ensure that finished joints conform to the plan details with the concrete sections completely separated by the specified opening or joint material.

Remove all concrete within the joint opening soon after form removal and again where necessary after surface finishing to ensure full effectiveness of the expansion joint.

4.6.7. **Construction Joints**. A construction joint is formed by placing plastic concrete in direct contact with concrete that has attained its initial set. Monolithic placement means the manner and sequence of concrete placing does not create a construction joint.

Make construction joints of the type and at the locations shown on the Design Documents. Do not make joints in bridge slabs not shown on the Design Documents. Additional joints in other members are not permitted without approval. Place authorized additional joints using details equivalent to those shown on the Design Documents for joints in similar locations.

Make construction joints square and normal to the forms. Use bulkheads in the forms for all vertical joints.

Thoroughly clean the hardened concrete surface of all loose material, laitance, dirt, and foreign matter, and saturate it with water. Remove all free water and moisten the surface before concrete or bonding grout is placed against it. Ensure the surface of the existing concrete is in a saturated surface-dry (SSD) condition just before placing subsequent concrete. Prewet the existing concrete by ponding water on the surface for 24 hr. before placing subsequent concrete. Use high-pressure water blasting to achieve SSD conditions 15 to 30 min. before placing the

concrete if ponding is not possible. An SSD condition is achieved when the surface remains damp when exposed to sunlight for 15 min.

Draw forms tight against the existing concrete to avoid mortar loss and offsets at joints.

Bonding agents are not required. Coat the joint surface with bonding mortar, grout, epoxy, or other material as indicated on the Design Documents or other Items if a bonding agent is required. Provide Type V epoxy per DMS-6100, "Epoxies and Adhesives," for bonding fresh concrete to hardened concrete. Place the bonding epoxy on a clean, dry surface, and place the fresh concrete while the epoxy is still tacky. Place bonding mortar or grout on a surface that is SSD, and place the concrete before the bonding mortar or grout dries. Place other bonding agents in accordance with the manufacturer's recommendations.

4.6.8. **Handling and Placing**. Minimize segregation of the concrete and displacement of the reinforcement when handling and placing concrete. Produce a uniform, dense, compact mass.

Do not allow concrete to free-fall more than 5 ft. Remove any hardened concrete splatter ahead of the plastic concrete.

Fill each part of the forms by depositing concrete as near its final position as possible. Do not deposit large quantities at one point and run or work the concrete along the forms.

Avoid cold joints in a monolithic placement. Sequence successive layers or adjacent portions of concrete so they can be vibrated into a homogeneous mass with the previously placed concrete before it sets.

Use an approved Type B or D set retarding agent to control stress cracks and cold joints in placements where differential settlement and setting time may induce cracking.

4.6.9. **Consolidation**. Carefully consolidate concrete and flush mortar to the form surfaces with immersion type vibrators. Do not use vibrators that operate by attachment to forms or reinforcement except where approved on steel forms.

Vibrate the concrete immediately after deposit. Systematically space points of vibration to ensure complete consolidation and thorough working of the concrete around the reinforcement, embedded fixtures, and into the corners and angles of the forms. Insert the vibrator vertically where possible except for slabs where it may be inserted in a sloping or horizontal position. Vibrate the entire depth of each lift, allowing the vibrator to penetrate several inches into the preceding lift. Do not use the vibrator to move the concrete to other locations in the forms. Do not drag the vibrator through the concrete. Thoroughly consolidate concrete along construction joints by operating the vibrator along and close to but not against the joint surface. Continue the vibration until the concrete surrounding reinforcements and fixtures is completely consolidated. Hand-spade or rod the concrete if necessary to ensure flushing of mortar to the surface of all forms. Concentrate vibration efforts along the beams lines when precast concrete panels are used for deck construction.

4.6.10. **Installation of Dowels and Anchor Bolts**. Install dowels and anchor bolts by casting them in-place or by grouting with grout, epoxy, or epoxy mortar. Form or drill holes for grouting. Use only epoxy when installing horizontal dowels into the edges of slabs. Follow the manufacturer's

recommended installation procedures for pre-packaged grout or epoxy anchor systems. Test anchors if required on the Design Documents or by other Items.

Drill holes for anchor bolts to accommodate the bolt embedment required by the Design Documents. Make holes for dowels at least 12 in. deep. Make the hole diameter at least twice the dowel or bolt diameter, but the hole need not exceed the dowel or bolt diameter plus 1-1/2 in. when using cementitious grout or epoxy mortar. Make the hole diameter 1/16 to 1/4 in. greater than the dowel or bolt diameter when using neat epoxy unless indicated otherwise by the epoxy manufacturer.

Thoroughly clean holes of all loose material, oil, grease, or other bond-breaking substance, and blow them clean with filtered compressed air. Use a wire brush followed by oil-free compressed air to remove all loose material from the holes, repeating as necessary until no more material is removed. Ensure holes are in a surface-dry condition when epoxy type materials are used and in a surface-moist condition when cementitious grout is used. Develop and demonstrate for approval a procedure for cleaning and preparing the holes for installation of the dowels and anchor bolts. Completely fill the void between the hole and dowel or bolt with grouting material. Follow exactly the requirements for cleaning outlined in the product specifications for pre-packaged systems.

Provide a Type III epoxy per DMS-6100, “Epoxies and Adhesives,” when neat epoxy is used for anchor bolts or dowels. Provide Type VIII epoxy per DMS-6100, “Epoxies and Adhesives,” when an epoxy grout is used. Provide grout, epoxy, or epoxy mortar as the binding agent.

Provide other anchor systems as required on the Design Documents.

4.6.11. **Placing Concrete in Cold Weather**. Protect concrete placed under weather conditions where weather may adversely affect results. If concrete placed under poor conditions is unsatisfactory, remove and replace it.

Do not place concrete in contact with any material coated with frost or with a temperature of 32°F or lower. Do not place concrete when the ambient temperature in the shade is below 40°F and falling. Place concrete when the ambient temperature in the shade is at least 35°F and rising or above 40°F.

Provide and install recording thermometers, maturity meters, or other suitable temperature measuring devices to verify all concrete is effectively protected. Maintain the temperature of the top surface of bridge slabs and top slabs of direct traffic culverts at 50°F or above for 72 hr. from the time of placement and above 40°F for an additional 72 hr.

Use additional covering, insulated forms, or other means and, if necessary, supplement the covering with artificial heating. Avoid applying heat directly to concrete surfaces. Cure as specified in Item 422.4.8., “Final Curing,” during this period until all requirements for curing have been satisfied.

Have on hand all necessary heating and covering material, ready for use, before permission is granted to begin placement when impending weather conditions indicate the possible need for temperature protection. Distress caused by concrete drying out as a result of delayed set and strength gain associated with cold weather are a result of Developer’s actions and are subject to repair in accordance with Item 422.4.10., “Defective Work."

4.6.12. **Placing Concrete in Hot Weather**. Use an approved Type B or D set retarding agent in all concrete for superstructures and top slabs of direct traffic culverts, except concrete containing GGBF slag, when the temperature of the air is above 85°F.

Keep the concrete at or below the maximum temperature at time of placement as specified above. Sprinkle and shade aggregate stockpiles or use ice, liquid nitrogen systems, or other approved methods as necessary to control the concrete temperature.

4.6.13. **Placing Concrete in Superstructure**. Place simple span bridge slabs without transverse construction joints by using either a self-propelled transverse finishing machine or a mechanical longitudinal screed. Use of manually operated screeding equipment may be permitted for small placements or for unusual conditions such as narrow widening, variable cross slopes, or transitions. Support the screed adequately on a header or rail system stable enough to withstand the longitudinal or lateral thrust of the equipment. Adjust the profile grade line as necessary to account for variations in beam camber and other factors to obtain the required slab thickness and concrete cover over the slab reinforcement. Set beams and verify their surface elevations in a sufficient number of spans so that when adjustment is necessary, the profile grade line can be adjusted over suitable increments to produce a smooth riding surface. Take dead load deflection into account in setting the grades of headers and rail systems. Use construction joints, when required or permitted for slab placements on steel or prestressed concrete beams, as shown on the Design Documents. Release falsework under the spans before placing concrete on steel girder or truss spans, and swing the spans free on their permanent supports.

Provide additional camber to offset the initial and final deflections of the span as indicated on the Design Documents for concrete flat slab, concrete slab, and girder spans cast-in-place on falsework. Provide camber of approximately 3/8 in. for 30-ft. spans and 1/2 in. for 40-ft. spans to offset initial and final deflections for concrete slab and girder spans using pan forms. Provide a camber of 1/8 in. for 10-ft. spans but no more than 1/2 in. for concrete flat slab, concrete slab, and girder spans not using pan forms when dead load deflection is not shown on the Design Documents.

Provide a camber of 1/4 in. in addition to deflection for slabs without vertical curvature on steel or prestressed concrete beams. Provide camber for specified vertical curvature and transverse slopes.

Make 1 or more passes with the screed over the bridge slab segment before placing concrete on it to ensure proper operation and maintenance of grades and clearances. Use an approved system of checking to detect any vertical movement of the forms or falsework. Maintain forms for the bottom surface of concrete slabs, girders, and overhangs to the required vertical alignment during concrete placing.

Level, strike off, and screed the surface while carrying a slight excess of concrete ahead of the screed to fill all low spots as soon as the concrete has been placed and vibrated in a section wide enough to permit working. Move longitudinal screeds across the concrete with a saw-like motion while their ends rest on headers or templates set true to the roadway grade or on the adjacent finished slab. Move transverse screeds longitudinally approximately 1/5 of the drum length for each complete out-and-back pass of the carriage. Screed the surface of the concrete enough times and at intervals to produce a uniform surface true to grade and free of voids.

Fog unformed surfaces of slab concrete in bridge slabs and in top slabs of direct traffic culverts from the time of initial strikeoff of the concrete until finishing is completed and required interim

curing is in place. Do not use fogging as a means to add finishing water and do not work moisture from the fog spray into the fresh concrete.

Retard the concrete for simple spans only if necessary to complete finishing operations or as required by this Section. Bring the top of curb and sidewalk section to the correct camber and alignment when filling curb forms, and finish them as described in this Item.

4.6.13.1. **Transverse Screeding**. Install rails for transverse finishing machines that are supported from the beams or girders so the supports may be removed without damage to the slab. Prevent bonding between removable supports and the concrete in an acceptable manner. Do not allow rail support parts that remain embedded in the slab to project above the upper mat of reinforcing steel. Rail or screed supports attached to I-beams or girders are subject to the requirements of this Item. Place concrete at a minimum rate of 30 ft. of bridge slab per hour for transverse screeding. Deposit concrete parallel to the skew of the bridge so all girders are loaded uniformly along their length. Deposit slab concrete between the exterior beam and adjacent beam before placing concrete in the overhang portion of the slab. Furnish personnel and equipment capable of placing, finishing, and curing the slab at an acceptable rate to ensure compliance with the specifications. Place concrete in transverse strips. Start placement at the lowest end on profile grades greater than 1-1/2%.

At Developer's option, attach a pan drag and either a carpet or burlap drag to the screed assembly to float and provide surface micro-texture in one operation. Adjust the contact pressure of the pan drag to smooth high spots and fill any depressions left by the screed. Adjust the weight or position of the carpet or burlap drag to produce a smooth sandy micro-texture without blemishes, marks, or scratches deeper than 1/16 in. Fill screed rail support holes and holes from depth checks for slab thickness and reinforcing cover with concrete, and finish them to match the rest of the slab.

4.6.13.2. **Longitudinal Screeding**. Use of temporary intermediate headers will be permitted for placements over 50 ft. long if the rate of placement is rapid enough to prevent a cold joint and if these headers are designed for easy removal to permit satisfactory consolidation and finish of the concrete at their locations. Deposit slab concrete between the exterior beam and the adjacent beam before placing concrete in the overhang portion of the slab. Place concrete in longitudinal strips starting at a point in the center of the segment adjacent to 1 side except as this Section indicates, and complete the strip by placing uniformly in both directions toward the ends. Start placing at the lowest end for spans on a profile grade of 1-1/2% or more. Use strips wide enough that the concrete within each strip remains plastic until placement of the adjacent strip. Place the concrete in proper sequence to be monolithic with the adjacent longitudinal strips of the slabs where monolithic curb construction is specified.

4.6.13.3. **Placements on Continuous Steel Units**. Place slabs on continuous steel units in a single, continuous operation without transverse construction joints using a self-propelled transverse finishing machine or a mechanical longitudinal screed. Retard the initial set of the concrete sufficiently to ensure concrete remains plastic in at least 3 spans immediately preceding the slab being placed. Use construction joints, when required for slab placements on steel beams or girders, as shown on the Design Documents. Ensure the previously placed concrete attains a compressive strength of 3,000 psi when staged placement of a slab is required on the Design Documents before placing the next stage concrete. Multiple stages may be placed in a single day if approved. Use an approved placing sequence that will not overstress any of the supporting members where Design Documents permit staged placing without specifying a particular order of placement.

4.6.13.4. **Slab and Girder Units**. Place girders, slab, curbs of slab, and girder spans monolithically. Fill concrete girder stems first, and place the slab concrete within the time limits specified in this Item. Place concrete in the stems for a short distance if using a transverse screed, and then place the concrete in transverse strips. Fill the outside girder stem first, beginning at the low end or side, if using a longitudinal screed, and continue placement in longitudinal strips.

4.7. **Finish and Interim Curing of Bridge Slabs.** Obtain approval of the proposed interim curing methods, equipment, and materials at the pre-pour meeting before placing concrete. Take into account forecast weather conditions to determine the interim curing methods to use.

Use work bridges or other suitable facilities to perform all finishing operations and to provide access, if necessary, to check measurements for slab thickness and reinforcement cover.

Work the screeded surface to a smooth finish with a long-handled wood or metal float or hand-float it from work bridges over the slab. Floating may not be necessary if the pan float attached to a transverse screed produces an acceptable finish. Avoid overworking the surface of the concrete. Avoid use of finish water.

Perform sufficient checks, witnessed by TxDOT, with a long-handled 10-ft. straightedge on the plastic concrete to ensure the final surface will be within specified tolerances. Make the check with the straightedge parallel to the centerline. Lap each pass half over the preceding pass. Remove all high spots, and fill and float all depressions over 1/16 in. deep with fresh concrete. Continue checking and floating until the surface is true to grade and free of depressions, high spots, voids, or rough spots. Fill screed-rail support holes with concrete, and finish them to match the top of the slab.

Provide a uniform micro-texture using a carpet drag, burlap drag, or broom finish. Finish the surface to a smooth sandy texture without blemishes, marks, or scratches deeper than 1/16 in. Apply the surface texturing using a work bridge or platform immediately after completing the straightedge checks. Draw the carpet or burlap drag longitudinally along the concrete surface, adjusting the surface contact area or pressure to provide a satisfactory coarsely textured surface. A broom finish may be performed using a fine bristle broom transversely. For bridge approach slabs the carpet drag, burlap drag, or broom finish may be applied either longitudinally or transversely.

Evaporation protection is required if the evaporation rate exceeds 0.15 lbs/sf/hr based on the *Evaporation Calculation for Concrete Worksheet* as shown on TxDOT's website, the evaporation rate nomograph in the Portland Cement Association's *Design and Control of Concrete Mixtures* or if indicated on the Design Documents.

4.7.1. **Evaporation Protection.** Use one of the following methods for evaporation protection:

4.7.1.1. **Evaporation Retardant.** Coat the concrete surface immediately after the carpet or burlap drag, or broom finish with a single application of evaporation retardant at a rate recommended by the manufacturer. Do not allow more than 10 min. to elapse between the texturing at any location and application of evaporation retardant. The evaporation retardant may be applied using the same work bridge used for surface texturing. Do not work the concrete surface once the evaporation retardant has been applied.

4.7.1.2. **Wet Burlap.** Place pre-wet burlap no more than 10 ft. behind the finishing operation. A work bridge may be required to avoid marring the surface. Ensure the wet burlap covers the entire surface. Use sprayers, hoses, sprinklers, or other similar methods to keep the burlap continuously wetted until application of the final curing.

4.7.2. **Interim Curing.** Apply interim curing using one of the following options, after applying the evaporation protection (if needed):

4.7.2.1. **Membrane Cure.** Apply membrane interim curing at a rate of approximately 180 sq. ft. per gallon. Apply before the water sheen disappears but do not place over standing water. Fog as necessary to maintain the wet sheen. Do not spray membrane curing on a dry surface.

4.7.2.2. **Wet Burlap.** Place pre-wet burlap no more than 10 ft. behind the finishing operation. Burlap used for evaporation protection will also be considered as the interim curing.

4.8. **Final Curing.** Obtain approval of the proposed curing methods, equipment, and materials at the pre-pour meeting before placing concrete. Inadequate curing or facilities may delay all concrete placements on the job until remedial action is taken. Apply final curing as soon as possible after interim curing without damaging the surface finish. Check the adequacy of the curing each Day of the curing period. Take corrective action or modify the curing methods as needed to maintain a moist concrete surface.

A curing Day is a Day when the temperature, taken in the shade away from artificial heat, is above 50°F for at least 19 hr. or, on colder Days if the temperature of all surfaces of the concrete is maintained above 40°F, for the entire 24 hr. The required curing period begins when all concrete has attained its initial set. Tex-440-A may be used to determine when the concrete has attained its initial set.

Cure all superstructure concrete according to the following:

- Concrete using Type I or III cement: 8 Days
- Concrete using Type I/II or II cement: 10 Days
- Concrete with any type of SCM: 10 Days

Place polyethylene sheeting, burlap-polyethylene blankets, laminated mats, or insulating curing mats in direct contact with the slab when the air temperature is expected to drop below 40°F during the first 72 hr. of the curing period. Weigh down these curing materials with dry mats to maintain direct contact with the concrete and provide insulation against cold weather. Supplemental heating or insulation may be required in cold and wet weather if the insulating cotton mats become wet or the concrete drops below the specified curing temperature. Avoid applying heat directly to concrete surfaces.

Use one of the following water curing methods for final curing. Keep all exposed surfaces of the concrete wet continuously for the required curing time. Use water for curing that meets the requirements for concrete mixing water in Item 421.2.4., “Water.” Do not use seawater or water that stains or leaves an unsightly residue.

4.8.1. **Cotton Mats**. Keep the concrete continuously wet by maintaining wet cotton mats in direct contact with the concrete for the required curing time. Weight the mats adequately to provide continuous contact with all concrete. Cover surfaces that cannot be cured by direct contact with mats, forming an enclosure well anchored to the forms or ground so outside air cannot enter the enclosure.

Provide sufficient moisture inside the enclosure to keep all surfaces of the concrete wet. Use of soaker hoses and plastic covering is acceptable provided the concrete surface remains continuously wet for the required curing duration.

4.8.2. **Burlap Mats**. The burlap used for interim curing may also be used for final curing if kept continuously wetted and completely covered with plastic sheeting. Overlap plastic sheeting and weigh down sufficiently so air cannot get under the plastic.

4.8.3. **Burlap-polyethylene Mats**. Place these mats over soaker hoses or other similar methods to keep the concrete surface wetted for the duration of the curing period. Overlap the mats and weight down sufficiently so air cannot get under the mats.

4.9. **Removal of Forms and Falsework.** Forms for vertical surfaces may be removed after the concrete has aged 12 hr. after initial set provided the removal can be done without damage to the concrete.

Remove forms for inside curb faces and for bridge rails whenever removal can be done without damage to the curb or railing.

Leave in place weight-supporting forms and falsework spanning more than 1 ft. until the concrete has attained a compressive strength of 2,500 psi. Remove forms for other structural components as necessary.

Forms or parts of forms may be removed only if constructed to permit removal without disturbing forms or falsework required to be left in place for a longer period on other portions of the structure.

Remove all metal appliances used inside forms for alignment to a depth of at least 1/2 in. from the concrete surface. Make the appliances so that metal may be removed without undue chipping or spalling of the concrete, and so that it leaves a smooth opening in the concrete surface when removed. Do not burn off rods, bolts, or ties.

Remove all forms and falsework.

Apply an ordinary surface finish as the final finish to the bottom of bridge slabs between girders or beams, and vertical and bottom surfaces of interior concrete beams or girders.

Form marks and chamfer edges do not need to be smoothed for the bottom of bridge slabs between girders or beams. Remove all fins, runs, drips, or mortar from surfaces that will be exposed.

4.10. **Defective Work.** Developer is responsible for the ride quality of the finished bridge slab. Developer shall use a 10 ft. straightedge (1/8 in. in 10 ft.) to verify ride quality and determine locations where corrections are needed. Submit a plan for approval to produce a ride of acceptable quality if TxDOT determines the ride quality is unacceptable. Make all corrections for ride before saw-cutting grooves.

Repair defective Work as soon as possible. Remove and replace any defect that cannot be repaired to the satisfaction of TxDOT.

Inspect the deck or slab for plastic shrinkage and settlement cracking after completion of final curingand within five Days after curing mats removed. Seal any noted shrinkage cracks attributable to Developer placing, curing and finishing practices using gravity feed crack repair.

Transverse cracks over interior bents in continuous slab units do not need to be sealed in this manner.

4.11. **Final Surface Texture.** Saw-cut grooves in the hardened concrete of bridge slabs, bridge approach slabs, and direct traffic culverts to produce the final texturing after completion of the required curing period. Cut grooves perpendicular to the structure centerline. Cut grooves across the slab within 18 in. of the barrier rail, curb, or median divider. Adjust groove cutting at skewed metal expansion joints in bridge slabs by using narrow-width cutting heads so all grooves end within 6 in. of the joint, measured perpendicular to the centerline of the metal joint. Leave no ungrooved surface wider than 6 in. adjacent to either side of the joint. Ensure the minimum distance to the first groove, measured perpendicular to the edge of the concrete joint or from the junction between the concrete and the metal leg of the joint, is 1 in. Cut grooves continuously across construction joints or other joints in the concrete less than 1/2 in. wide. Apply the same procedure described above where barrier rails, curbs, or median dividers are not parallel to the structure centerline to maintain the 18 in. maximum dimension from the end of the grooves to the gutter line. Cut grooves continuously across formed concrete joints. Provide either a carpet drag or broom finish for micro-texture when saw-cut grooves are not required on the Design Documents. In this case ensure an adequate and consistent micro-texture is achieved by applying enough weight to the carpet and keeping the carpet or broom from getting plugged with grout. For surfaces that do not have adequate texture, TxDOT may require corrective action including diamond grinding or shot blasting.

Give a carpet drag, burlap drag, or broom finish to all concrete surfaces to be overlaid when the Design Documents call for a concrete overlay (CO) to be placed on the slab (new construction). Saw-grooving is not required in this case. Provide an average texture depth for the finish of approximately 0.035 in. with no individual test falling below 0.020 in. when tested in accordance with Tex-436-A. Revise finishing procedures to produce the desired texture if the texture depth falls below what is intended.

Give all concrete surfaces to be covered a lightly textured broom or carpet drag finish when the Design Documents require an asphalt seal, with or without overlay, on the slab (new construction). Provide an average texture depth of approximately 0.025 in. when tested in accordance with Tex-436-A.

Item 423

15. Retaining Walls

1. DESCRIPTION

Furnish, construct, and install retaining walls.

2. MATERIALS

2.1. **General. Furnish materials in accordance with the following:**

- Item 420, "Concrete Substructures"
- Item 421, "Hydraulic Cement Concrete"
- Item 440, "Reinforcement for Concrete"
- Item 445, "Galvanizing"
- Item 458, "Waterproofing Membranes for Structures"

Use concrete for retaining walls that conforms to the requirements of Table 1.

Table 1

Concrete for Retaining Walls

Application	Concrete
Cast-in-place, non-reinforced	Class A
Cast-in-place, reinforced	Class C
Precast	Class H, f'_c = 4,000 psi

Furnish concrete for machine-made concrete block units in accordance with ASTM C90, Class 1, Type II, except the minimum 28-Day compressive strength must be 4,000 psi with maximum moisture absorption of 7%.

Provide Type 1 filter fabric in accordance with DMS-6200, "Filter Fabric." Provide filter fabric rated as UV-resistant when used as part of the exposed facing for a temporary wall.

Joint fillers, pads, waterstops, and other incidental materials must be as shown on the Design Documents.

Epoxy coat all steel used in concrete panels and coping including connectors, dowels, stirrups, and reinforcing steel when the Design Documents call for epoxy coating of steel earth reinforcements.

2.2. **Definitions.** This Item uses the following terms:

- **Permanent Wall**. A retaining wall with a design service life of 75 years. All walls are presumed to be permanent walls.

- **Temporary Wall**. A retaining wall so designated by description, with a design service life of 3 years.
- **Mechanically Stabilized Earth (MSE) Wall**. A wall consisting of a volume of select backfill with tensile earth reinforcement Elements distributed throughout. Permanent MSE walls use a precast concrete panel as a facing Element. Temporary MSE walls use welded wire fabric with filter fabric backing as a facing Element.
- **Concrete Block Wall**. A retaining wall that uses machine-made, precast concrete block units as facing Elements. The walls may use a volume of select fill with tensile earth reinforcements distributed throughout, or may use only the facing unit and unit fill weight for support.

2.3. **Fabrication.**

2.3.1. **Cast-in-Place**. Meet Item 420, "Concrete Substructures."

2.3.2. **Formed Precast**. Meet Item 424, "Precast Concrete Structural Members (Fabrication)."

2.3.3. **Machine-Made Precast**. Furnish machine-made concrete block units in accordance with ASTM C90, sampled and tested in accordance with ASTM C140. Furnish units with molded dimensions within 1/8 in. of specified dimensions, except height must be within 1/16 in.

2.4. **Backfill.**

2.4.1. **Non-Select**. Furnish non-select backfill for walls other than temporary and permanent MSE and concrete block walls as indicated on the Design Documents. Non-select fill shall be of the type specified on the Design Documents. Provide material with a maximum plasticity index of 30 if no type is specified as determined by Tex-106-E.

2.4.2. **Select**. Select backfill is required in specific areas of permanent and temporary MSE and concrete block-type retaining walls. Provide select backfill that is free from organic or otherwise deleterious materials and that conforms to the gradation limits shown in Table 2 as determined by Tex-401-A.

Provide backfill that does not contain shale, caliche, or other soft, poor-durability coarse aggregate particles. Reclaimed Asphalt Pavement (RAP) is not allowed. Crushed Concrete or manufactured sand is allowed for temporary walls with a service life of 3 years or less. Test each source of backfill for durability/soundness using Tex-411-A, 5-cycle magnesium sulfate soundness. Backfill material with a maximum 5-cycle soundness loss exceeding 25% shall be rejected. Alternately, Tex-461-A, Micro-Deval abrasion may be used if the corresponding results show loss is not greater than 20%, otherwise Tex-411-A governs aggregate verification.

Type AS, BS, and DS particles larger than 1/4 in. must be angular or completely crushed. Provide mechanically crushed gravel or stone backfill. Gravel from each aggregate source shall have a minimum of 95% two or more mechanically induced crushed faces, as Tex-460-A, Part I determines. Rounded rock or rounded gravel is not allowed. Natural sand meeting the requirements of this Section is permitted for use.

Table 2

Select Backfill Gradation Limits

Type	Sieve Size	Percent Retained
AS	3 in.	0
	1/2 in.	50–100
	No. 4	See Note
	No. 40	85–100
	No. 200	95–100
BS	3 in.	0
	No. 4	See Note
	No. 40	40–100
	No. 200	85–100
CS	3 in.	0
	No. 4	See Note
	No. 200	75–100
DS	3 in.	0
	3/8 in.	85–100
	No. 200	95–100

Note—Use No. 4 sieve for determination of rock backfill as described in this main paragraph, "Backfill."

When the backfill gradation results in 85% or more material retained on the No. 4 sieve, the backfill shall be considered rock backfill. All Type DS backfill is considered rock backfill.

In addition to the requirements for Type CS select fill, the fraction finer than the No. 200 sieve must have a Plasticity Index (PI) in accordance with Tex-106-E not greater than 6.

Furnish Type BS backfill for permanent walls; Type CS backfill for temporary walls; and Type DS backfill for areas of walls subject to inundation, or below the 100-year flood elevation as noted on the Design Documents.

Furnish backfill meeting the requirements of this Section but with a maximum particle size of 3/4 in. when nonmetallic or epoxy coated earth reinforcements are used.

2.4.3. **Drainage Aggregate**. Use drainage aggregate to fill the void within concrete block units and in the zone 1 ft. behind the units. Provide drainage aggregate that is free from organic or otherwise deleterious materials and that conforms to the gradation limits in Table 3 as Tex-110-E determines.

Table 3

Drainage Aggregate Gradation Limits

Sieve Size	Percent Retained
1 in.	0
3/4 in.	25–50
1/2 in.	50–100
No. 4	75–100

2.4.4. **Cement-Stabilized Backfill**. Use cement-stabilized backfill when required. Stabilize Type CS backfill with 5% hydraulic cement by dry weight of the backfill material. Use a stationary plant to thoroughly mix the backfill material, cement, and water. Place and compact the backfill within 2 hours of mixing. Provide special drainage provisions when cement-stabilized backfill is used, as shown on the Design Documents.

2.4.5. **Electrochemical**. Provide backfill meeting the following additional requirements for permanent retaining wall systems using galvanized metallic earth reinforcements:

- The pH is between 5.5 and 10.0 as Tex-128-E determines.
- Resistivity is more than 3,000 ohm-cm as Tex-129-E determines.
- Material with resistivity between 1,500 and 3,000 ohm-cm may be used if the chloride content is less than 100 ppm and the sulfate content is less than 200 ppm as Tex-620-J determines.

Perform electrochemical testing on the raw, unstabilized backfill material when cement-stabilized backfill is used.

2.5. **Earth Reinforcements.** Furnish earth reinforcements that meet the design requirements. Galvanize or epoxy coat all steel Elements for permanent walls in contact with soil. Epoxy coat in accordance with Item 440, “Reinforcement for Concrete,” except provide a minimum 18-mil coating thickness. Epoxy coat the reinforcing only when shown on the Design Documents. Use connection hardware that is likewise nonmetallic or epoxy coated when using nonmetallic or epoxy coated earth reinforcements.

3. CONSTRUCTION

3.1. **General.** Construct retaining walls in accordance with details shown on the Design Documents, on the approved working drawings, and to the pertinent requirements of the following Items:

- Item 400, “Excavation and Backfill for Structures”
- Item 420, “Concrete Substructures”
- Item 458, “Waterproofing Membranes for Structures”

Construct required piling or drilled shafts in accordance with the pertinent specification.

3.2. **Options.** When optional design details are shown on the Design Documents, Developer is required to use the same facing design within an area of continuous retaining walls.

Provide drawings for review indicating the proposed design arrangement when proposing the use of 2 or more systems.

3.3. **Working Drawings.** When proprietary wall systems are used for permanent or temporary walls, submit casting drawings, construction drawings, and design calculations bearing the seal of a Registered Professional Engineer for review and approval following the TxDOT Guide to Electronic Shop Drawing Submittal process. Upon completion of construction, submit a set of reproducible Record Drawings.

3.3.1. **Casting Drawings**. Include all information necessary for casting wall Elements, including railing and coping when prefabricated. Show shape and dimensions of panels; size, quantity, and details of the reinforcing steel; quantity, type, size, and details of connection and lifting hardware; and additional necessary details.

3.3.2. **Construction Drawings**. Include a numbered panel layout showing horizontal and vertical alignment of the walls as well as the existing and proposed groundlines. Include all information needed to erect the walls, including the proposed leveling pad elevations; the type and details of the soil reinforcing system (if applicable); the details and manufacturer of all pads, fillers, and filter fabric; the limits and dimensions of structural backfill; details necessary to incorporate coping, railing, inlets, drainage, and electrical conduit; and additional necessary details.

Leveling pad elevations may vary from the elevations shown on the Design Documents. Provide at least 1 ft. of cover from the top of the leveling pad to finish grade.

3.3.3. **Design Calculations**. Include calculations covering the range of heights and loading conditions on the Project. Calculations for both internal and external stability as described on the Design Documents are required. Include a summary of all design parameters used; material types, strength values, and assumed allowables; loads and loading combinations; and factor-of-safety parameters.

3.4. **Permanent MSE Walls.** Grade the foundation for the structure level to a width equal or exceeding the length of the reinforcing system. Perform proof rolling on retaining wall foundation area to identify any loose, soft, or unsuitable materials. Material not meeting a maximum rut depth of 1 in. per pass of pneumatic tire roller should continue to be rolled or removed and replaced with suitable material. Pneumatic tire rolling will be waived for portions of wall with a reinforcement length of 8’; for these conditions proof rolling shall be required with a smooth-wheeled vibratory roller or other approved roller.

Place drilled shafts and piling located within the MSE volume before construction of the wall. Place any required pipe underdrain before construction of the wall. Complete MSE wall construction before construction of abutment caps and abutment wing walls. Completion of walls and abutment should be in conjunction with Project phasing or to allow for completion of walls that meets the proper placement and compaction at abutments.

Place the concrete leveling pad as shown on the construction drawings. Provide a wood float finish, and wait a minimum of 24 hr. before beginning panel erection. No curing or strength testing of the leveling pad concrete is required.

Shim the first row of panels as necessary to achieve correct alignment. Use plastic shims or other material that will not deteriorate. Remove and replace the leveling pad or provide a grout level-up if the required shim height exceeds 1 in.

Place filter fabric behind the wall along the joint between the leveling pad and the panels. Grout areas where filter fabric spans more than 6 in. at leveling pad steps.

Place and compact fill material over the leveling pad to an elevation even with or above the surrounding ground after backfilling the first row of panels. Do not allow water to accumulate and stand at the base of the wall.

Place filter fabric behind all wall joints and at the intersection of retaining walls with other structures, including riprap. Cover joints at least 6 in. on each side and use adhesive to hold the filter fabric in place.

Exercise care while lifting, setting, and aligning panels to prevent damage to the panels. Discontinue any operation that results in chipping, spalling, or cracking of panels. Remove and replace damaged panels.

Provide external bracing for the initial row of panels. Use wooden wedges, clamps, or other means necessary to maintain position and stability of panels during placement and compaction of backfill. Remove wooden wedges as soon as the panel or coping above the wedged Element is erected and backfilled. Remove all wedges after completing the wall.

Review plumbness and position of each row of panels before placing the subsequent row. Remove and rebuild any portion of the wall that is out of tolerance. Modify panel batter and bracing, and backfill material, placement, and compaction methods as required to maintain wall tolerances.

Construct walls to a local vertical and horizontal alignment tolerance of 3/4 in. when measured along a 10-ft. straightedge relative to vertical and horizontal wall control line. Construct walls to an overall vertical tolerance (plumbness from top to bottom) of 1/2 in. per 10 ft. of wall height. Construct walls so the maximum offset at any panel joint is between 3/8 in. and 3/4 in. and no joint is open to the extent the filter fabric is visible from the front of the wall.

Place backfill to closely follow the erection of each row of panels. Place the select and embankment backfill to the same elevation where possible, and operate the compaction equipment over the interface. Do not create a continuous, distinct, vertical joint between the select and embankment backfill. Complete the embankment after construction of the retaining wall.

Maintain the stability of the interface area between the existing ground and the select fill when building a wall against existing ground. Remove and recompact any material that loosens, caves, or fails.

Compact backfill to provide at least 95% of density determined in accordance with Tex-114-E. Field density determination shall be made in accordance with Tex-115-E.

Sprinkle backfill as required to ensure adequate uniformly distributed moisture in each lift before and during compaction. Place fill in lifts of 8 in. or less (loose measurement). Place fill in a manner that avoids segregation of the fill. Decrease the lift thickness if necessary to obtain the required compaction. Use hand-operated or walk-behind compaction equipment in the 3 ft. wide strip adjacent to the wall panels. Do not displace panels or distort or damage the reinforcement

system during compaction. Modify backfill material, placement, and compaction methods as necessary to meet density requirements while maintaining wall tolerances.

Place and compact the backfill to the reinforcement level, at each earth reinforcement level, before placing the reinforcement. Place earth reinforcements perpendicular to the face of the wall. Remove slack in connections before placing backfill. Pre-tension each layer of reinforcement to remove slack before placing backfill for systems using nonmetallic earth reinforcements. Use devices capable of mechanically applying and holding the required force. Do not operate tracked equipment directly on any reinforcement.

Cover the rock backfill with filter fabric before placing the 2 ft. of backfill immediately below the pavement structure or top of wall when rock backfill is used. Overlap the fabric at least 18 in. at splices, and extend it past the edge of the rock backfill at least 18 in. Use backfill that contains sufficient fines to fill the voids in a compacted state above the filter fabric. Place a horizontal layer of filter fabric as noted above when transitioning from rock backfill to finer grained backfill anywhere within the wall volume.

Prevent surface water or rainwater from damaging the retaining walls during construction. Shape the backfill to prevent water from ponding or flowing on the backfill or against the wall face. Remove and replace any portion of the retaining wall damaged or moved out of tolerance by erosion, sloughing, or saturation of the retaining wall or embankment backfill.

3.5. **Temporary MSE Walls.** Provide a facing system rigid enough to maintain a smooth and straight wall face both during and after construction.

Grade and compact the foundation for the structure as described in Item 423.3.4., “Permanent MSE Walls.”

Place earth reinforcement and facing system in accordance with the approved working drawings. Backfill the 2-ft. zone immediately behind the facing with clean, coarse rock meeting the requirements of Coarse Aggregate Grade 1, 2, or 3 of Item 421, “Hydraulic Cement Concrete,” or of Type DS backfill as described in Item 423.2.4.2., “Select.” Cement-stabilized backfill as described in Item 423.2.4.4., “Cement-Stabilized Backfill,” may be used in place of the coarse rock.

Place and compact backfill in accordance with Item 423.3.4., “Permanent MSE Walls.”

Construct walls to a vertical and horizontal alignment tolerance of 3 in. when measured along a 10-ft. straightedge. Construct walls to an overall vertical tolerance (plumbness from top to bottom) of 2 in. per 10 ft. of wall height. Place adjacent facing Elements so the maximum out-of-plane offset at any facing Element joint is less than 1 in. Place facing Elements and filter fabric with no gaps in the facing or fabric.

Prevent surface water or rainwater from damaging the retaining walls during and after construction. Place temporary berms or curbs, shape the backfill, or use other approved methods to prevent water from flowing against or over the wall face. Remove and replace any portion of the wall damaged or moved out of tolerance by erosion, sloughing, or saturation of the retaining wall or embankment backfill.

3.6. **Concrete Block Retaining Walls.** The concrete block units may be sampled and tested before shipment or upon delivery to the construction site. Display for approval, samples of block units indicating the color, texture, and finish. Store, transport, and handle all block units carefully to prevent cracking or damage.

Grade and compact the foundation for the structure, and place the leveling pad as described in Item 423.3.4., "Permanent MSE Walls."

Place the concrete block facing units in accordance with the approved working drawings. Fill the voids within the units and fill the 1-ft. zone immediately behind the facing with drainage aggregate as described in Item 423.2.4.3., "Drainage Aggregate." Systems tested without unit fill may omit the fill as indicated on the approved drawings. Systems with approved filter fabric details may omit the drainage aggregate in the 1-ft. zone immediately behind the facing.

Place reinforcements and backfill for walls using earth reinforcements in accordance with the requirements of Item 423.3.4., "Permanent MSE Walls." Pay particular attention to the connection details of the earth reinforcements to the concrete block units.

Construct walls to a vertical and horizontal alignment tolerance of 1-1/2 in. when measured along a 10-ft. straightedge. Construct walls to an overall vertical tolerance (deviation from the vertical or battered control line, top to bottom) of 1 in. per 10 ft. of wall height. Place adjacent facing Elements so the maximum out-of-plane offset at any facing Element joint is less than 1 in. Place facing Elements with maximum 1/4-in. gaps between block units.

Prevent surface water or rainwater from damaging the retaining walls during construction. Shape the backfill to prevent water from ponding or flowing on the backfill or against the wall face. Remove and replace all portions of the retaining wall damaged or moved out of tolerance by erosion, sloughing, or saturation of the retaining wall or embankment backfill.

Item 424

16. Precast Concrete Structural Members (Fabrication)

1. DESCRIPTION

Fabricate precast prestressed and precast nonstressed concrete members. This Item, in conjunction with DMS-7300, "Precast Concrete Fabrication Plants," applies to both multi-project and project-specific fabrication plants. For this Item, the following definitions apply:

- **Prestressing**. The introduction of internal stresses (pre-tensioning or post-tensioning) into a structural member by tensioning and anchoring strands, bars, or wires to counteract the stresses resulting from the applied load.
- **Pre-Tensioning**. The application of prestressing force to the tensioning devices before casting concrete.
- **Post-Tensioning**. The application of prestressing force to the tensioning devices after concrete has hardened.
- **Tendon**. Any single unit used to apply prestressing force to the member. For post-tensioned units, a tendon is a bar, group of wires, or group of strands with common end anchorage.
- **Multi-Project Fabrication Plant**. A facility at an offsite location that fabricates precast prestressed or precast nonstressed members. This definition also applies to single Contract offsite facilities.
- **Project-Specific Fabrication Plant**. A temporary facility at or near the Project location that fabricates precast prestressed or precast nonstressed members for only one Contract. This definition may be applied to temporary facilities that fabricate for multiple Contracts, if approved.
- **Nonstressed Members**. Precast concrete members that have not been pre-tensioned or post-tensioned.
- **Prestressed Members**. Precast concrete members fabricated by the process of pre-tensioning, post-tensioning, or a combination of both methods.
- **Minor Prestressed Members**. Includes piling, bridge deck panels, and sound wall panels.
- **Major Prestressed Members**. Includes all other prestressed members not listed as minor prestressed members.
- **I-beams**. For this specification all I-girders and bulb-tee beams are referred to as I-beams.
- **Self-Consolidating Concrete (SCC)**. A highly workable concrete that can flow through densely reinforced or complex structural Elements under its own weight and adequately fill voids without segregation or excessive bleeding without the need for vibration.
- **Temperature Probe**. Thermocouple for measuring concrete temperature or air temperature.
- **Temperature Recording Device**. Data logger for recording temperatures from the temperature probes.

2. EQUIPMENT

2.1. **Field Office and Inspection Laboratory.** Provide a field office and inspection laboratory for multi-project and project-specific fabrication plants in accordance with DMS-7300, "Precast Concrete Fabrication Plants."

2.2. **Furnishings and Laboratory Equipment.** Provide furnishings and laboratory equipment for multi-project and project-specific fabrication plants in accordance with DMS-7300, "Precast Concrete Fabrication Plants."

2.3. **Plant Facilities.** Provide plant facilities for multi-project and project-specific fabrication plants that produce prestressed members in accordance with DMS-7300, "Precast Concrete Fabrication Plants."

2.4. **Batch Plant.** Provide batch plant onsite for SCC construction. Do not use volumetric mixers for SCC.

3. MATERIALS

Furnish materials in accordance with Item 425, "Precast Prestressed Concrete Structural Members" and other pertinent Items.

4. CONSTRUCTION

4.1. **General Requirements.**

4.1.1. **Shop Drawings**. Prepare and electronically submit shop drawings before fabrication as documented in the *Guide to Electronic Shop Drawing Submittal* available on the TxDOT website. Provide one complete approved 11 × 17 in. set in hardcopy to the TxDOT inspector at the fabrication plant. Stamp it "For TxDOT Inspector."

Provide a title block on each sheet in the lower right corner with the following information:

- sheet index data shown on lower right corner of the Design Documents,
- sheet numbering for shop drawings,
- name of structure or stream,
- name of owner or developer,
- name of fabricator or Supplier, and
- name of Developer.

4.1.1.1. **Prestressed Members**. Furnish shop drawings for prestressed members. Submit the proposed designs on forms furnished by TxDOT when optional designs are permitted by the Design Documents. Obtain approval of these designs before casting. Approval of optional designs does not relieve Developer from the responsibility of furnishing a satisfactory completed structure. Provide submittals for precast post-tensioned members in accordance with this specification and Item 426, "Post-Tensioning."

4.1.1.2. **Nonstressed Members**. Furnish shop drawings for nonstressed members when required by the Design Documents or pertinent Items.

4.1.2. **Plant Approval**.

4.1.2.1. **Plant Submittals**. Provide submittals in accordance with DMS-7300, "Precast Concrete Fabrication Plants," for each particular plant operation. This requirement does not apply to Project-specific nonstressed member fabrication plants.

4.1.2.2. **Plant Audits**. Multi-project and project-specific fabrication plants must pass initial and periodic TxDOT-directed plant audits in accordance with DMS-7300, "Precast Concrete Fabrication Plants."

4.1.3. **Notice of Beginning Work**. Give adequate notice before beginning Work as specified in Table 1. Include a schedule for all fabrication processes and dates when inspections are to occur.

Table 1

Notice of Beginning Work

Plant Location	Notice Required
In Texas	7 Days
In the contiguous United States	21 Days
Outside the contiguous United States	60 Days

Perform no Work in the plant before fabrication is authorized. Developer must bear all TxDOT travel costs when changes to their fabrication or inspection schedules are not adequately conveyed to TxDOT.

4.1.4. **Personnel Qualifications**. Provide qualified personnel in accordance with DMS-7300, "Precast Concrete Fabrication Plants," for each particular plant operation.

4.1.5. **Quality Responsibilities**. The quality responsibilities for Developer for each particular plant operation shall be in accordance with DMS-7300, "Precast Concrete Fabrication Plants."

4.2. **Fabrication.** Prepare a casting schedule on TxDOT-approved forms per DMS-7300, "Precast Concrete Fabrication Plants," and submit it daily to TxDOT before fabrication. This requirement does not apply to Project-specific minor prestressed member or Project-specific nonstressed member fabrication plants. Perform fabrication during daylight hours. Submit lighting details electronically for review before installing lighting system. Allow for plant and TxDOT inspection.

4.2.1. **Forms**. Design forms to prevent damage to the concrete from restraint as the concrete shrinks, from form expansion and contraction from thermal changes, from stripping operations, and from dimensional changes due to pre-tensioning. Forms, regardless of material, must conform to the profiles, dimensions, and tolerances of the finished product as specified on the Design Documents and in this Item. Maintain forms free from dents, grease, or other foreign materials that may affect the appearance of the member, and clean forms thoroughly before each casting operation and immediately before applying a form-release agent.

4.2.1.1. **External Forms**. Construct side and bottom forms of steel. Timber forms, when permitted, must meet the requirements of Item 420.4.4., "Forms." End headers may be of other material as approved.

Construct forms with sufficient thickness, external bracing and stiffeners, and anchorage to withstand the forces generated during concrete placement and consolidation. Do not stabilize forms with bracing and holding devices that will remain in the finished member.

Provide corners with a chamfer or radius where shown on the Design Documents.

Maintain forms sufficiently mortar-tight to prevent damage that requires repair to the finished product. Where sections of forms will be joined, an offset of 1/16 in. for flat surfaces and 1/8 in. for corners and bends is permitted. Longitudinal form joints in prestressed concrete beams are not permitted except for in the side forms of slab beams, decked slab beams, box beams, and X-beams. Do not allow vertical or horizontal gaps or offsets to exceed 1/4 in. between adjacent sections of built-up end headers.

Check the grade and alignment of forms each time they are set, and maintain them during placement of concrete.

Apply a form-release agent, in accordance with the manufacturer's recommendations, to the facing of forms before placing concrete. Use a form-release agent that facilitates form removal and does not affect any required coating, painting, or color-staining operations. Do not use materials that appreciably stain or react with the concrete. Remove excess form-release agent from the form surface before casting, and ensure it does not contaminate strands, reinforcing steel, and embedments. Use a clear form-release agent of the same brand throughout the casting of retaining wall panels per structure.

Construct the forms to facilitate removal of members without damage to the concrete.

Construct and maintain the soffit (liner) to provide a maximum 1/4 in. variation from the theoretical plane, and do not allow the soffit to vary more than 1/4 in. between any 2 points in any 50 ft. length.

At Developer's option, construct side forms for bridge deck panels and prestressed piling with a draft for ease of product removal. Maintain product dimensional tolerances per Table 3. A maximum 1/4 in. draft is allowed for bridge deck panels.

4.2.1.2. **Internal Forms**. Use solid expanded polystyrene conforming to ASTM C578 Type I for forming internal voids. The form material must be inert, non-biodegradable, non-absorptive, and strong enough to maintain sufficient rigidity to withstand the forces generated during concrete placement and consolidation without damage. Other materials for forming internal voids may be used when approved. Provide certification of conformance for void forms.

Anchor internal void forms to prevent movement or misalignment while placing concrete. Provide hold-down devices for all types of void forms at 30-in. maximum spacing. Do not use internal hold-down or lateral bracing devices that will remain in the finished member. Provide enough bearing area on the void form to prevent penetration of hold-down devices into the void form. Splice void form sections to prevent separation or misalignment during concrete placement and consolidation operations.

During casting, verify and document void form placement at 10-ft. maximum spacing using an approved method.

Vent void forms without solid cores to eliminate high air pressure caused by heat of hydration. Insert a 3/4-in. diameter plastic tube into the top of the void before placing concrete, and leave it in place until there is no possibility of damage from pressure. Remove the plastic tube afterwards and seal the hole with an approved repair material and procedure.

Drain prestressed concrete box beams and U-beams through the bottom flange by forming holes in each voided area as shown on the Design Documents.

4.2.2. **Prestressing**. Perform pre-tensioning in accordance with this Item and post-tensioning in accordance with Item 426, "Post-Tensioning."

4.2.2.1. **Prestressing Equipment**. Furnish hydraulic jacks with sufficient capacity for prestressing the steel. Equip the jacks with instruments for monitoring the hydraulic pressure. Provide gauges at least 6 in. in diameter and with means to prevent the gauge pointer from fluctuating. Electronic pressure transducers with digital indicators may be used. Pressure gauges or electronic pressure indicators must indicate the load directly to 1% of the maximum gauge or sensor/indicator capacity or 2% of the maximum load applied, whichever is smaller.

Calibrate each jack and its gauge with the cylinder extension in the approximate position at final jacking force. Jacks and gauges for post-tensioning and single-strand pre-tensioning must be calibrated as a unit. Have certified calibration charts furnished by an independent laboratory and with each jack and gauge used on the Project. Provide certified calibration of each ram before starting stressing operations on the Project and:

- every 6 mo. thereafter for post-tensioning operations,
- every 12 mo. thereafter for pre-tensioning operations.

The calibration frequency for multiple-strand pre-tensioning equipment may be extended to every 24 mo. thereafter if an approved master gauge system monitors it. The master gauge must check this equipment when suspect results occur and at least every 6 mo. Calibrate the master gauge per the manufacturer's recommendations and at least every 12 mo.

Recalibrate jacks and gauges when a malfunction occurs, when repairs such as replacing the seals, changing the length of the hydraulic lines, or changing the pump occur, or when using gauges that have not been calibrated with the jack.

Post-tensioning jacks must have provisions for measuring tendon elongation directly on the strand, bar, or wire. The jacks must be capable of slow release of force to properly seat the tendon anchors.

Single-strand stressing jacks for pre-tensioning must have provisions for measuring the elongation directly on the strand.

Multi-strand de-tensioning jacks must have sufficient capacity and throw to permit simultaneous release of the entire load in the strands. Use an approved single-strand flame-release procedure to release the remaining load if there is not enough throw in the multi-strand jacks to release all load in the strands.

4.2.2.2. **Pre-Tensioning**. Pre-tension all strands to a uniform initial load between 5% and 25% of the final load. Apply the load within a tolerance of:

- ±100 lb. per strand if the designated initial load is less than or equal to 10% of the final load, or
- ±200 lb. per strand if the designated initial load is greater than 10% of the final load.

Measure the initial load with a calibrated dynamometer or other suitable equipment.

Do not allow the modulus of elasticity of individual strands to vary more than 1% from each other when multiple-strand tensioned. Use a weighted average modulus of elasticity of strands to calculate elongation for multiple-strand tensioning operations.

Establish reference marks on the strand for measuring elongation after initial tensioning. Provide means for measuring the elongation of the strand to an accuracy of 1% of the theoretical elongation or 1/8 in., whichever is smaller. Establish independent references on the strand adjacent to each anchorage, to indicate slippage that may occur between the time of initial stressing and final release of the strands.

Do not allow the stress in the strand to exceed 80% of the specified ultimate tensile strength of the strand at any time.

Do not use any portion of the strand that has been previously gripped with chucks in the length of strand to be tensioned, except where gripped with chucks during initial tensioning. Do not drive over prestressing strand.

Strand chucks designed with spring caps must be used with the spring caps. Visually inspect strand chucks that are not equipped with spring caps to ensure all wedges are evenly seated after applying initial load. Correct unevenly seated wedges by releasing the stress, repositioning wedges, and reapplying the initial load.

Failure of individual wires in a 7-wire strand is acceptable if the total area of wire failure is not more than 2% of the total cross-sectional area of all strands in the member, and if no more than 1 wire fails in any single strand. Any setup with one or more broken wires must be examined by a Registered Professional Engineer or Quality Control Supervisor (as defined in DMS-7300, “Precast Concrete Fabrication Plants,”) to determine the cause before continuing stressing operations on the particular casting line.

4.2.2.2.1. **Strand Splicing**. Do not splice draped strands. One splice per straight strand will be permitted subject to the following:

- Locate splices outside the members.
- Splice strands with the lay or twist in the same direction to avoid unraveling.
- Splice all straight strands in a multiple-strand tensioning operation so an adjustment can be made for the average seating loss.
- Cut strand ends to be spliced with shears, abrasive saws, or grinders to remove regions where chucks were previously seated. Cut in the same manner at least 12 in. from strand ends to be spliced that were previously flame cut.

4.2.2.2.2. **Single and Multiple Straight Strand Tensioning**. After initial tensioning, apply the required load to the strands as shown on the Design Documents by means of single-strand or multiple-strand hydraulic jacks equipped with calibrated gauges. Verify the final load in the strands by observing either the gauge pressure or elongation and independently checking the other. The final load and elongation must agree within 5% of the computed theoretical values. Additionally, the final load and elongation must agree algebraically with each other within 5%. Suspend tensioning operations until the problem has been identified and corrected in the event of discrepancies greater than these tolerances.

Verify uniform application of load to strands for multiple-strand-tensioning systems by measuring the movement on opposite sides of the anchorage.

4.2.2.2.3. **Draped Strand Tensioning**. Verify the intermediate load by observing either the gauge pressure or elongation and independently checking the other when draped strands are tensioned in a straight or partially- draped position before application of final load. The intermediate or final load, if strands are tensioned in the final position, and elongation must agree within 5% of the computed theoretical values. Additionally, the intermediate or final load and elongation must agree algebraically with each other within 5%. Suspend tensioning operations until the problem has been identified and corrected in the event of discrepancies greater than these tolerances.

After application of final load, measurements on individual draped strands to establish differential stresses at selected points on the member shall be averaged at a cross-section of the member, and the averages must be within 5% of the theoretical elongation. The measured elongation of any individual draped strand must not vary from the theoretical elongation by more than 10% at any measured cross-section. Suspend tensioning operations until the problem has been identified and corrected in the event of discrepancies greater than these tolerances.

Other methods to measure the intermediate load and final load in the draped strands may be submitted for approval.

4.2.2.2.4. **Strand Debonding**. Encase strands in plastic sheathing along the entire debonded length, and seal the ends with waterproof tape when shown on the Design Documents. Use split plastic sheathing only if the seam is sufficiently sealed with waterproof tape to prohibit grout infiltration. Do not use sheathing that will permanently alter the physical or chemical properties of the surrounding concrete.

Full-length debonding of straight strands will be approved on an individual basis. Full-length debonding, when permitted, must be symmetrical about the vertical centerline of the beam and limited to 10% of the total number of straight strands or 6 straight strands, whichever is less. Do not debond draped strands full length. When using a concrete anchor block to combined strand patterns the same criteria applies.

4.2.2.3. **Combined Pre-Tensioning and Post-Tensioning**. When the Design Documents call for a combination of pre-tensioning and post-tensioning, all of the requirements for pre-tensioning in this specification and for post-tensioning in Item 426, “Post-Tensioning” apply.

4.2.3. **Placing Reinforcing Steel**. Place reinforcing steel in accordance with Item 440, “Reinforcement for Concrete.” Reinforcing steel projection outside of the member must not be more than 1/2 in. or less than 3/4 in. from plan dimension Do not damage sheathing for strand debonding. Do not tie reinforcing steel to debonded strand regions.

Weld steel components in accordance with Item 448, “Structural Field Welding.” Provide welding procedure specifications (WPSs) for approval, and welding personnel certifications per the applicable AWS code. **Quality of Concrete**. Provide concrete in accordance with Item 421, “Hydraulic Cement Concrete.” Use the class of concrete shown on the Design Documents or in the pertinent Item for each type of structure or unit. Provide concrete meeting the approved mix design water-cement ratio. SCC is not allowed for Project-specific fabrication plants. Mix concrete for a period of 1 min. for 1 cu. yd. and 15 sec. for each additional cu. yd. of rated capacity of the mixer. Count the mixing time from the time all materials are in the drum. Increase mixing time if necessary to achieve a uniform mix. Control concrete by compressive strength

tests of cylinders or other pertinent performance tests detailed on the Design Documents or pertinent Items. Concrete compressive-strength test cylinders shall be made, cured, and tested in accordance with Tex-704-I. Cure release-of-tension strength cylinders in accordance with Tex-715-I when match-cure technology is used.

High-strength concrete (f'_c > 9000 psi) is accepted based on 56-Day compressive strength testing. Concrete design-strength test cylinders for high-strength concrete shall be made, cured, and tested in accordance with Tex-704-I.

Product with concrete that fails to meet minimum design compressive strength requirements shall be reviewed. Cores taken to determine the strength of the in-situ concrete shall be in accordance with Tex-424-A. All cores from precast members must meet 100% of the minimum design compressive strength requirements. TxDOT may require reimbursement for testing of cores. Test results from a commercial laboratory must be sealed by a Registered Professional Engineer.

SCC used for prestressed beams must have a Modulus of Elasticy of 5000 ksi at 28 Days. Test the concrete mix design before use in accordance with ASTM C469.

4.2.4. **Placing Concrete**. Place concrete only when its temperature at time of placement is between 50°F and 95°F.

Take responsibility for producing quality concrete under any weather condition and ensure adequate weather protection provisions are on-site and available for immediate use.

Provide immediate protective measures without compromising the quality of the product if rainfall occurs after concrete placing operations have started. Failure to immediately provide adequate weather protection may be cause for rejection of the affected product.

Maintain concrete transporting equipment clean and free from hardened concrete coatings.

At the time of concrete placement, reinforcing steel, strands, and embedments must be free of dirt, oil, or other bond-breaking substances.

Place and adequately consolidate concrete while all lifts are in a plastic state. Concrete must not exhibit segregation or excessive bleeding. Minimize concrete flow lines and displacement of the reinforcing steel, strands, embedments, and ducts during concrete placement. Concrete must not exhibit segregation or excessive bleeding. Minimize concrete flow lines and displacement of the reinforcing steel, strands, embedments, and ducts during concrete placement.

Place concrete as near as possible to its final position in the forms except when using SCC. Do not deposit large quantities of concrete at one location and run or work it along the forms to other locations except for SCC. Place SCC in a manner to avoid segregation.

Do not allow fresh concrete to free-fall more than 8 ft..

Work the coarse aggregate back from the face of the concrete, and force the concrete under and around the reinforcing steel, strands, embedments, and ducts. If prestressed concrete I-beams are cast in multiple lifts, the thickness of the first lift must be slightly above the juncture of the bottom flange and web.

Cast prestressed concrete box beams monolithically in 2 stages, maintaining the concrete in the previously placed bottom slab in a plastic state until the web (side wall) concrete is placed and vibrated into the bottom slab.

The maximum time between the addition of mixing water or cement to the concrete batch and the placing of concrete in the forms is 30 min. for concrete delivered in non-agitated delivery equipment and 60 min. for concrete delivered in agitated delivery equipment. If conditions of wind, humidity, and temperature cause quick stiffening of the concrete, the required placement times may be reduced and an approved retarder may be required, or increased if currently in use. Submit a plan for approval, if necessary, to demonstrate the concrete can be properly placed, consolidated, and finished without reducing placement time limits.

The maximum acceptable placement slump shall be in accordance with Item 421, "Hydraulic Cement Concrete." When the maximum acceptable placement slump or slumpflow is exceeded, the affected concrete shall be rejected and retesting for slump or slumpflow will not be allowed regardless of the concrete placement times.

Additional requirements for precast mass placements shall be in accordance with Item 420, "Concrete Substructures." In the case of a conflict between the two Items the more stringent requirements apply.

4.2.4.1. **Placing Concrete in Cold Weather**. Maintain concrete temperature between 50°F and 95°F at time of placement as specified in Item 424.4.2.4., "Placing Concrete," and maintain the concrete temperature of precast members at or above 50°F during the specified curing period as specified in Item 424.4.2.6., "Curing of Concrete." Do not place concrete when the atmospheric temperature in the shade is below 40°F and falling. Concrete may be placed when the atmospheric temperature in the shade is at least 35°F and rising or above 40°F, provided adequate cold-weather protection provisions are on-site and available for immediate use before placing concrete when weather conditions indicate a possible need for temperature protection. When required, provide necessary covering material or an approved accelerated curing system in accordance with Item 424.4.2.6.3., "Accelerated Curing," and do not allow any concrete to remain unprotected for longer than 1 hr. after placement. Do not place concrete in contact with any material coated with frost or with material at a temperature of 32°F or lower. Do not apply heat directly to concrete surfaces if accelerated curing is used. Take protective measures to ensure the difference between air temperature and concrete surface temperature does not cause thermal cracking.

Maintain aggregates free from ice, frost, and frozen lumps. Heat the aggregate and the water when needed to produce the minimum concrete placement temperature of 50°F, but:

- do not allow the water temperature to exceed 180°F or the aggregate temperature to exceed 150°F,
- heat the aggregate uniformly to eliminate overheated areas in the stockpile that might cause flash set of the cement, and
- provide an aggregate and water mixture temperature between 50°F and 85°F before introduction of the cement.

4.2.4.2. **Placing Concrete in Hot Weather**. Keep concrete at or below 95°F at time of placement in accordance with Item 424.4.2.4., "Placing Concrete." Use any of the following methods, as needed, to control the concrete placement temperature:

- Cool the aggregate by sprinkling or fogging (fine mist) with water, shading, or using an approved liquid nitrogen system and procedure.
- Cool the fresh concrete by using chilled mixing water, partially replacing mixing water with shaved or crushed ice, or using an approved system and procedure to discharge liquid nitrogen into concrete during batching.

Apply a fog spray (fine mist) of water to this steel just before placing concrete when the temperature of steel forms, strand, or reinforcing steel is greater than 120°F. Water droplets left on the form surfaces must not adversely affect surface finishes.

When field conditions are such that evaporation of water from the concrete makes the surface finishing operation difficult, a fog spray (fine mist) of water may be applied above the concrete surface. Do not fog directly toward the concrete or in any manner that will wash cement paste from the fresh concrete surface or cause water to puddle. Do not fog as a means to add finishing water and do not work moisture from the fog spray into the fresh concrete. An approved evaporation retardant conforming to DMS-4650, "Hydraulic Cement Concrete Curing Materials and Evaporation Retardants," is also acceptable if used in accordance with the manufacturer's recommendations. Do not apply the evaporation retardant when floating and troweling concrete. Do not allow it to puddle or be worked into the concrete surface immediately after application. Misuse of fog spray or evaporation retardant will be cause for disallowing its use. Shade the concrete during casting if necessary.

Use an approved retarder, in accordance with the manufacturer's recommendations, when the air temperature is above 85°F if necessary to control concrete slump loss and lengthen the time for placing, consolidating, and finishing operations.

4.2.4.3. **Consolidation of Concrete**. Consolidate concrete thoroughly with high-frequency vibration immediately after placement. For prestressed concrete beams and piling, internal vibration is required and may be supplemented with external vibration.

Provide at least 1 on-site standby vibrator of the type being used for Emergency use.

Perform concrete vibration using trained personnel and proper timing and spacing to ensure adequate consolidation. Revise the concrete placement and consolidation procedures, and review the concrete mix design and batching procedures, if necessary, when unacceptable defects such as excessive honeycombing, aggregate or mortar pockets or surface air voids (bugholes) are present. Provide supplemental vibrators or modify the vibration system when required to accomplish thorough consolidation of the concrete and complete embedment of the strands, reinforcing steel, embedments, or ducts. Avoid segregation or excessive bleeding of the concrete during vibration.

4.2.4.3.1. **Internal Vibration**. Insert vibrators into the concrete immediately after concrete placement at points spaced to ensure uniform vibration of the entire concrete mass. Limit the insertion spacing to within the radius where the vibrators are visibly effective. Allow the vibrators to sink into the concrete by their own weight and penetrate into previously placed lifts that are still in a plastic state to thoroughly consolidate the layers together and prevent cold joints. Withdraw the vibrators slowly to avoid forming holes after the concrete is thoroughly consolidated.

Do not allow prolonged contact of vibrators with forms so vibrator marks on concrete surfaces are minimal. Do not use vibrators to move concrete to other locations in the forms.

Use vibrators with nonmetallic vibrating heads to prevent damage to the epoxy coating when epoxy coated reinforcing steel is used. Increase the consolidation time and decrease the insertion spacing, if necessary, when using these vibrators.

4.2.4.3.2. **External Vibration**.

4.2.4.3.2.1. **Form Vibrators**. Form vibrators may be used to consolidate thin members, supplement internal vibration, or consolidate members with highly congested reinforcing steel.

Determine the size, number, and location of external vibrators to provide enough intensity of vibration to the desired area of the form. Adjust the spacing, frequency, amplitude, and duration of vibration according to the concrete mix and size of member to produce uniform consolidation of the concrete.

4.2.4.3.2.2. **Surface Vibrators**. Use vibratory screeds to consolidate thin sections. Move vibratory screeds at a rate that will bring enough mortar to the surface to embed and cover the coarse aggregate. Do not over vibrate by causing an excessive amount of mortar to be brought to the surface.

4.2.4.3.2.3. **Vibrating Tables**. Determine the size, number, and location of external vibrators to provide enough intensity of vibration to the desired area of the form. Adjust the spacing, frequency, amplitude, and duration of vibration according to the concrete mix and size of member to produce uniform consolidation of the concrete.

4.2.4.3.3. **Vibration of Self-Consolidating Concrete (SCC)**. Provide an adequate amount of viscosity modifying admixture (VMA) in SCC mix when internal vibration is used.

4.2.5. **Finishing of Concrete**. Finished, unformed surfaces must not have distortions greater than 1/4 in. Screed or rough-float unformed surfaces of members, bringing enough mortar to the surface to embed and cover the coarse aggregate. Provide a uniform rough wood float finish to the surface of the member. Do not loosen aggregate when roughening the surface with a broom or when providing a tine finish.

Provide a smooth metal trowel finish for surfaces at anchor bolt locations.

4.2.6. **Curing of Concrete**. Cure concrete to promote early cement hydration by providing adequate moisture on exposed surfaces and by maintaining the concrete temperature or curing enclosure air temperature at the concrete surface within the limits specified in this Section. Provide uniform temperature and moisture on the surfaces to prevent differential shrinkage that may cause warping or cracking. Prevent temperature differentials within the concrete that cause thermal cracking.

Begin curing after the finishing operation, before the formation of plastic shrinkage cracks, and as soon as damage to the surface finish will not occur. Provide fog spray or an evaporation retardant after finishing and before curing if needed to prevent plastic shrinkage cracks. Apply fog spray or evaporation retardant in accordance with Item 424.4.2.4.2., “Placing Concrete in Hot Weather.” Keep exposed concrete surfaces continuously wet for the duration of the specified curing period. Membrane curing compound is only permitted as noted in this Section or in the pertinent Item.

Approved equipment and materials for curing must be on-site and available for immediate use before placing concrete. Provide temperature probes to monitor the concrete temperature or curing enclosure air temperature as specified in Table 2.

Table 2

Temperature Probe Requirements

Condition	Major Prestressed Members	Minor Prestressed Members	Nonstressed Members
Forecasted atmospheric temperature ≥ 50°F during specified curing period	2 concrete temperature probes per casting line to monitor high concrete temperature regions[5]	2 concrete temperature probes per casting line to monitor high concrete temperature regions[1,5]	N/A
Forecasted atmospheric temperature < 50°F during specified curing period	2 concrete temperature probes per casting line to monitor high concrete temperature regions[5], and 2 concrete temperature probes per casting line to monitor low concrete temperature regions[2,5]	2 concrete temperature probes per casting line to monitor high concrete temperature regions[1,5,] and 2 concrete temperature probes per casting line to monitor low concrete temperature regions[2,5]	1 concrete temperature probe per 100 cu. yd. of concrete or fraction thereof to monitor low concrete temperature regions[2]
Forecasted atmospheric temperature < 40°F during additional 3-Day curing period[3]	N/A	1 concrete temperature probe per similar curing condition for prestressed piling only	N/A
When accelerated curing is used	2 temperature probes per casting line to monitor curing enclosure air temperature at concrete surfaces[4,5]	2 temperature probes per casting line to monitor curing enclosure air temperature at concrete surfaces[4,5]	1 temperature probe per 100 cu. yd. of concrete or fraction thereof to monitor curing enclosure air temperature at concrete surfaces

Excluding prestressed bridge deck panels and prestressed retaining wall panels.

When accelerated curing is used, concrete temperature probes to monitor low concrete temperature regions are not required.

After attaining specified release-of-tension strength.

These probes are in addition to the concrete temperature probes required for monitoring high concrete temperature regions.

Place probes at the beginning and end of casting line.

Attach each temperature probe to a separate temperature recording device. When accelerated curing is used, 1 curing enclosure air temperature probe may also be attached to this multi-channel temperature recording device.

Inadequate curing facilities or lack of attention to the proper curing of concrete will be cause for TxDOT to stop concrete placement until approved curing is provided. Inadequate curing may be cause for rejection of the affected product.

Forms may be removed at the discretion of Developer at any time after the concrete has reached sufficient strength to prevent physical damage to the member. Do not interrupt curing for more than 60 min. during form removal.

The following curing requirements apply for prestressed members:

- Cure concrete continuously, except as allowed during form removal, until the compressive strength of the concrete has reached the specified release-of-tension strength and until de-tensioning has been performed.
- Maintain concrete temperatures between 50°F and 150°F during the curing period. The maximum allowable concrete temperature may be increased to 170°F if Developer uses one of the concrete mix design options listed in Item 421.4.2.6., "Mix Design Options," other than options 6, 7, and 8. TxDOT may require lowering of the total cementitious content in the concrete mix design to the limits specified in Item 421, "Hydraulic Cement Concrete," for repeated violations of the maximum curing temperature.
- Membrane curing is permitted only for unformed surfaces of prestressed wall panels and interim curing on unformed surfaces of prestressed piling. Use Type 1-D or Type 2 curing compound conforming to DMS-4650, "Hydraulic Cement Concrete Curing Materials and Evaporation Retardants," for this application.
- Water cure prestressed piling an additional 3 Days after attaining the specified release-of-tension strength. Do not interrupt curing for more than 4 hr. when moving piling to the storage area. Maintain the concrete temperature of piling at 50°F or above during this additional curing period.

The following curing requirements apply for nonstressed members:

- Cure concrete continuously, except as allowed during form removal, for 4 Days or until the compressive strength of the concrete has reached the design strength.
- Maintain concrete temperatures between 50°F and 150°F during the curing period. The maximum allowable concrete temperature may be increased to 170°F if Developer uses one of the concrete mix design options listed in Item 421.4.2.6., "Mix Design Options," other than options 6, 7, and 8.
- Membrane curing is permitted on nonstressed members, except for surfaces to be painted or color-stained.

Cure members for an additional 24 hr. beginning immediately after the normal curing period if they are out of cure at any time other than during the allowable 60 min. for form removal or during the allowable 4 hr. for moving piling to storage.

Members failing to meet the concrete temperature requirements or curing enclosure air temperature requirements during curing shall be reviewed. Repeated failure to maintain proper concrete temperatures may be cause for rejection of the affected product.

4.2.6.1. **Water Curing**. Water curing provides additional moisture to concrete and prevents moisture loss. Water used for curing must meet the requirements for concrete mixing and curing water specified in

Item 421.2.4., "Water." Do not use seawater or water that stains or leaves an unsightly residue that cannot be removed. Monitor and maintain a temperature differential between curing water and concrete surface temperature that prevents thermal cracking.

4.2.6.1.1. **Wet Mat Method**. Use water-saturated cotton mats, burlap, burlap-polyethylene sheeting, or other approved moisture-retaining materials. Anchor the wet mats adequately to provide continuous contact with exposed concrete surfaces.

4.2.6.1.2. **Water Spray Method**. Use overlapping sprays, sprinklers, or soil-soaker hoses so concrete surfaces are kept continuously wet.

4.2.6.1.3. **Ponding Method**. Use an approved retarder when the air temperature is above 85°F in accordance with the manufacturer's recommendations if necessary to control concrete slump loss and lengthen the time for placing, consolidating, and finishing operations.

4.2.6.1.4. **Moisture Retention Curing**. Moisture retention curing prevents moisture loss from the concrete.

4.2.6.1.4.1. **Form Curing Method**. Concrete surfaces in direct contact with forms that are left in place will not require additional curing methods unless cold-weather protection is necessary.

4.2.6.1.4.2. **Impermeable Cover Method**. Cover exposed concrete surfaces with polyethylene sheeting, burlap-polyethylene sheeting, impervious paper, or other approved impermeable materials placed in close contact with concrete surfaces to keep them continuously wet. Provide additional moisture inside the enclosure in accordance with Item 424.4.2.6.1., "Water Curing," if this is not enough to keep exposed concrete surfaces continuously wet.

4.2.6.2. **Membrane Curing**. Liquid membrane-forming curing compound is a moisture retention covering that is applied as a liquid. It is only permitted as noted in Item 424.4.2.6., "Curing of Concrete."

Use Type 1-D or Type 2 membrane curing compound in accordance with DMS-4650, "Hydraulic Cement Concrete Curing Materials and Evaporation Retardants." Apply membrane curing compound with equipment and in a manner specified in Item 420.3.5., "Spraying Equipment" and Item 420.4.10.3., "Membrane Curing," respectively.

Do not contaminate reinforcing steel, embedments, or concrete surfaces that will later be in direct contact with cast-in-place concrete unless the curing compound can be completely removed to the satisfaction of TxDOT when applying membrane curing compound.

Use membrane curing compounds that do not appreciably stain the concrete.

4.2.6.3. **Accelerated Curing**. Accelerated curing is defined as curing with artificial heat provided to the curing enclosure or forms.

Test accelerated-curing facilities for a minimum of 48 hr. to demonstrate temperature variations do not exceed 20°F between any points in the curing enclosure. Submit accelerated curing facility drawings and test results, and obtain approval before using these facilities for TxDOT Work. The test may be performed on the entire casting line with either freshly cast concrete inside the forms or with empty forms. Provide 1 curing enclosure air temperature probe per 100 ft. of casting line when accelerated curing facilities are being tested.

Maintain the air temperature in the curing enclosure between 50°F and 85°F until initial set of the concrete (as determined in accordance with Tex-440-A when establishing mix designs under representative temperature conditions) and for at least 3 hr. after concrete placement. The concrete temperature may then be raised uniformly at a maximum rate of 36°F per hour. Provide an unobstructed air space of at least 6 in. between surfaces of the concrete and the curing jacket.

Monitor and maintain the curing enclosure air temperature between 50°F and 160°F during accelerated curing for prestressed and nonstressed concrete members. Do not allow the air temperature to exceed 160°F for more than 1 cumulative hour during the entire curing period. Do not allow the air temperature to exceed 170°F at any time during the specified curing period. Arrange the location of the heat discharge into the curing enclosure so temperature variations do not exceed 20°F between any points in the curing enclosure.

Provide curing enclosure air temperature probes to monitor the temperature at the concrete surface as specified in Table 2.

Provide enough moisture inside the curing enclosure to keep exposed concrete surfaces continuously wet for the specified curing period.

Provide other acceptable curing methods for the remaining curing period if accelerated curing is terminated before the specified curing period has elapsed.

4.2.6.3.1. **Steam Curing**. Steam cure in accordance with the requirements of accelerated curing. Position steam outlets so live steam is not applied directly on the concrete, forms, or test cylinders.

4.2.6.3.2. **Alternate Methods**. Other methods of accelerated curing, such as the use of radiant heaters or portable heater, may be permitted if they meet the requirements of accelerated curing. The use of any alternate method requires written approval.

4.2.7. **Detensioning**. Release the tension in the strands after concrete strength requirements are met using a sequence to minimize premature wire breakage or shock and damage to the concrete members. Release strands by multiple-strand de-tensioning or single-strand flame de-tensioning. Ensure strands are not released individually with single-strand jacks.

Flame-release each strand simultaneously at both ends of the casting bed, using a symmetrical sequence prepared by a Registered Professional Engineer if strands are released individually. Heat the strands over an approved strand length and duration when flame de-tensioning so that the metal slowly elongates and gradually loses strength. Do not abruptly flame-cut strand by holding the heat source in a concentrated location on the strand. Submit the flame-release procedures and sequences for approval. Approval of flame-release sequences does not relieve Developer from responsibility for meeting the product workmanship requirements of Item 424.4.3., “Workmanship.”

Release the tension in the strand hold-down anchor slowly to minimize shock and damage to the concrete member when draped strands are used. Heat the anchor until the metal slowly elongates and gradually loses strength if heat is used to release the hold-down anchor. Provide positive external hold-downs to offset the vertical forces in the members when the sum of the hold-down forces is greater than half the weight of the member or for any amount of vertical

force that has previously caused cracking. External hold-downs are to remain on each member until de-tensioning has been complete.

4.3. **Workmanship.** Formed surfaces must not have excessive surface honeycombing, aggregate or mortar pockets, air voids, lift lines, stains, or vibrator marks. Remove form-joint-offset marks in excess of the tolerances specified in Item 424.4.2.1.1., "External Forms," and fins and rough edges along chamfer lines, in a manner that will not damage the member. Repair fabrication holes, except box beam and U-beam drain holes, with an approved repair material and procedure.

Recess strands in accordance with the TxDOT *Concrete Repair Manual*. Submit for approval any other moisture-barrier systems for protecting strands.

Before shipment of members, remove:

- concrete, paste, dirt, oil, or other bond-breaking substances from exposed reinforcing steel, and
- laitance, dirt, oil, or other bond-breaking substances from concrete surfaces to be in contact with cast-in-place concrete.

4.3.1. **Defects and Breakage**.

Members that sustain damage or surface defects during fabrication, handling, storage, hauling, or erection are subject to review. Evaluate and repair members in accordance with the TxDOT *Concrete Repair Manual*. Submit proposed deficiencies in accordance with TxDOT's NCR guidelines and obtain approval before performing repairs. Repair Work must reestablish the member's structural integrity, durability, and aesthetics to the satisfaction of TxDOT.

When deficiencies occur, determine the cause and take immediate corrective action. Failure to take corrective action, leading to similar repetitive deficiencies, could be cause for rejection of members.

Cracks that extend to the nearest reinforcement plane and fine surface cracks that do not extend to the nearest reinforcement plane, but are numerous or extensive, are subject to review.

Cracks in prestressed members that tend to close upon transfer of stress to the concrete are acceptable. Cracks that do not tend to close are subject to review.

Seal cracks in I-beam ends exceeding 0.005 in. in width. The fabricator must decrease the spacing of Bars R and S in I-beam by providing additional bars to help limit crack width. No less than 1 in. clearance between bars will be permitted. The fabricator must take approved corrective actions if cracks greater than 0.005 in. form.

Prestressed bridge deck panels shall be rejected for any of the following conditions:

- any crack extending to the reinforcing plane and running parallel and within 1 in. of a strand for at least 1/3 of the embedded strand length; or
- any transverse or diagonal crack, including corner cracks and breaks, intersecting at least 2 adjacent strands and extending to the reinforcing plane.

Prestressed bridge deck panels that sustain damage, cracks not listed above, or surface defects during fabrication, handling, storage, hauling, or erection are subject to review.

4.3.2. **Tolerances**.

4.3.2.1. **Prestressed Members**. Allowable tolerances for the dimensions and configurations shown on the Design Documents or approved shop drawings are shown in Table 3.

Variations greater than those specified in Table 3 are subject to review. However, these tolerances do not relieve Developer from the responsibility of furnishing a completed structure that is in reasonably close conformity with the lines, grades, cross-sections, dimensions, and details specified. Correct members not meeting these tolerances, to achieve a satisfactory completed structure. This also includes correction due to variations in vertical beam camber. Correction may require replacement of the member.

Horizontal misalignment (sweep) in beams, which may increase at a later time and exceed the tolerance shown in Table 3, may be acceptable if the members can be hauled, erected, and aligned to within the allowable tolerance without being damaged. Store these members in a manner that will minimize the sweep.

Embedments must be firmly held in proper position to avoid movement during concrete placement. Place embedments in accordance with the manufacturer's recommendations. Place weld clip inserts for permanent metal deck forming no more than 1/16 in. from the beam edge.

Table 3

Allowable Tolerances for Prestressed Members

Dimension	I-beams	U-beams	Box and Slab Beams	Double-T Beams	Bridge Deck Panels	Piling	Wall Panels[1]
Length (perpendicular to strands for bridge deck panels)	±1"	±1"	±1"	±3/4"	±1/2"	−1"[2]	±3/16"
Width (parallel to strands for bridge deck panels)	+3/4" −1/4"	±1/4"	±1/4"	±1/2"	±1/2"	±1/4"	±3/16"
Nominal depth (thickness in case of panels)	+1/2" −1/4"	±1/4"	±1/4"	±1/4"	+1/4" −1/8"	±1/4"	±3/16"
Thickness: top slab or flange	+1/2" −1/4"	±1/2"	±1/2"	±1/4"	NA	NA	NA
Thickness: bottom slab or flange	+1/2" −1/4"	±1/2"	±1/2"	NA	NA	NA	NA
Thickness: web or wall	+3/4" −1/4"	±1/2"	±1/2"	±1/4"	NA	NA	NA
Horizontal alignment (deviation from straightness of all panel edges)	±1/8" per 10' of length	±1/8" per 10' of length, 3/4" max.	±1/4"	±1/4"	±1/8"	±1/8" per 10' of length	±1/8" per 10' of length, 1/2" max.
Deviation of ends (horizontal skew)	±1/2"	±1/2"	±1/2"	±1/2"	±1/2"	±1/8"	±1/4" per 5' of width, 1/2" max.
Deviation of ends (vertical batter)	±1/2" [8]	±1/2" [8]	±1/2"	±1/2"	NA	±1/8"	±1/4"
Notched end areas (for diaphragms): depth	±1/4"	NA	±1/4"	±1/4"	NA	NA	NA
Notched end areas (for diaphragms): length	+2" −1"	NA	+2" −1"	+2" −1"	NA	NA	NA
Bearing surfaces: perpendicular to vertical axis	±1/8"	NA	NA	±1/16"	NA	NA	NA
Bearing surfaces: deviation from plane	±1/16"	±1/8"	±1/8"	±1/16"	NA	NA	±1/16[3]
Anchor hole location: from end of member	+3/4" −1/4"	±1/4"	±1/4"	+3/4" −1/4"	NA	NA	NA
Anchor hole location: longitudinal spacing	±3/4"	±1/2"	±1/2"	±3/4"	NA	NA	NA
Anchor hole location: transverse location	±1/4"	±1/4"	±1/4"	±1/4"	NA	NA	NA

Dimension	I-beams	U-beams	Box and Slab Beams	Double-T Beams	Bridge Deck Panels	Piling	Wall Panels[1]
Diaphragm or lateral tie location	±1/2"	NA	±1/2"	±1/2"	NA	NA	NA
Position of internal void form (longitudinal for box beams and U-beams)	NA	±1"	±1"[4,5]	NA	NA	±1/2"	NA
Projection of reinforcing steel outside of member	+1/2" −3/4"	+1/2" −3/4"	+1/2" −3/4"	+1/2" −3/4"	+1/2" −3/4"	NA	+1/2" −3/4"
Position of strands: vertical	±1/4"[6]	±1/4"	±1/4"	±1/4"	±1/8"[7]	±1/4"	±1/8"
Position of strands: horizontal	±1/4"	±1/4"	±1/4"	±1/4"	±1/2"	±1/4"	±1/2"
Debonded length of strands	±3"	±3"	±3"	±3"	NA	NA	NA
Position of strand hold-down points	±6"	±6"	±6"	±6"	NA	NA	NA
Position of handling devices: parallel to length	±6"	±6"	±6"	±6"	As shown on Design Documents	±6"	±6"
Position of handling devices: transverse to length	±1"	±1"	±1"	±1"	As shown on Design Documents	±1"	±1"
Local flatness of formed surfaces (excluding bearing surface)	±1/4" in 10'	±1/4" in 10'	±1/4" in 10'	±1/4" in 10'	±1/4"	±1/4" in 10'	±1/4" in 10'
Bow (length and width)	NA	NA	NA	NA	NA	NA	±1/4" per 10'

1. Prestressed and nonstressed wall panels (tie back, C-wall, sound wall, etc.) except MSE wall panels.
2. Maximum length as approved.
3. Measured along the panel depth at the top and bottom panel sides.
4. Voided box beams only.
5. Length of box beam internal void form +1", −6".
6. For draped strands, the tolerance for vertical position of strands at the end of the beam may be increased to ±1/2" provided the tested concrete compressive strength, before release of tension into the member, is at least 5% greater than the release-of-tension strength shown on the Design Documents.
7. Measured from bottom of panel.
8. 3/4 in. max for beams exceeding a height of 54 in.

4.3.2.2. **Nonstressed Members**. The allowable tolerances for nonstressed members are as specified in Table 4. The allowable tolerances for nonstressed wall panels, except MSE wall panels, are as specified in Table 3.

Table 4

Allowable Tolerances for Nonstressed Members

Member	Dimension	Tolerance
MSE wall panels and wall components[1] (coping, posts, etc.)	All dimensions (including deviation from edge straightness)	±3/16 in.
	Deviation of ends (horizontal skew)	±1/4 in. in 5 ft., ±1/2 in. max.
	Local flatness of formed surfaces	±1/8 in. in 5 ft.
	Connection hardware	±1/2 in.

1. Includes wall components for tie-back walls, C-walls, sound walls, etc.

4.4. **Storage and Handling.** Mark members for identification immediately after form removal as shown on approved shop drawings in accordance with the requirements of the pertinent Items. Do not change any identification markings or transfer material to other projects. Inspect members immediately before shipping to the jobsite for damage that may have occurred in storage. Store and handle prestressed and nonstressed members in accordance with Item 425, "Precast Prestressed Concrete Structural Members."

Item 425

17. Precast Prestressed Concrete Structural Members

1. DESCRIPTION

Furnish and erect precast prestressed concrete members fabricated by pre-tensioning, post-tensioning, or a combination of the two.

2. MATERIALS

Use materials that meet requirements of the following Items.

- Item 420, “Concrete Substructures”
- Item 421, “Hydraulic Cement Concrete”
- Item 426, “Post-Tensioning”
- Item 427, “Surface Finishes for Concrete”
- Item 434, “Bridge Bearings”
- Item 440, “Reinforcement for Concrete”
- Item 442, “Metal For Structures”
- Item 445, “Galvanizing”
- Item 448, “Structural Field Welding”
- DMS-4650, “Hydraulic Cement Concrete Curing Materials and Evaporation Retardants”
- DMS-7300, “Precast Concrete Fabrication Plants”

3. CONSTRUCTION

Fabricate precast prestressed concrete members in accordance with Item 424, “Precast Concrete Structural Members (Fabrication).” Fabricate railroad structures in accordance with the latest AREMA *Manual for Railway Engineering* and Item 424, “Precast Concrete Structural Members (Fabrication).” In the case of a conflict between the AREMA manual and Item 424, “Precast Concrete Structural Members (Fabrication),” the more stringent requirements apply.

3.149. **Handling, Storing, Hauling, and Erection.** Properly handle, store, haul, and erect all members so that they are placed in the structure in a manner to avoid excessive bending stresses and without damage. Lift members with approved lifting devices as shown on the shop drawings.

Maintain beams in an upright position at all times, and raise and support them near the ends to prevent torsion unless approved on shop or erection drawings.

Do not move members from the casting yard until all requirements of the pertinent Items have been met. Haul beams to the Project site after at least 7 Days have elapsed since casting.

The storage area must be clean and well drained. Prevent excessive or differential settlement of members by storing them on:

- stable ground and
- dunnage of sufficient size, shape, and strength to prevent crushing.

Place dunnage a distance no more than 3% of the beam length from the beam ends. When approved, cantilever beams may be supported at locations other than near the ends. Support concrete box beams and U-beams under the solid end block area during handling, storage, hauling, and erection.

Separate members with blocking arranged in vertical planes that will not crush under load when members are stacked. Stack members so lifting devices are accessible and undamaged. Use dunnage or blocking material that will not damage or stain the required finish.

Rearrange improperly stored members and inspect them for damage. Members that are improperly stored and become cracked, warped, or otherwise damaged in storage may be rejected.

Securely tie or brace all beams during erection in accordance with minimum erection and bracing standards. Protect traffic against falling objects during the erection of diaphragms and other structural members, during the placing of cast-in-place concrete, and during the erection and dismantling of forms when railroad or roadway traffic must be maintained beneath beams already placed. Protect traffic with nets or flooring with openings not larger than 1 in.

Fit mating surfaces to prevent excessive grout leakage when erecting precast prestressed concrete bridge deck panels. Fill the joint with grout or seal it with an acceptable caulking compound before placing the cast-in-place portion of the slab if such fit is not provided.

Finish surfaces of beams or other members after slab placement in accordance with Item 420.4.13., “Ordinary Surface Finish,” and Item 427, “Surface Finishes for Concrete.”

Correct beam discrepancies including, but not limited to horizontal misalignment or variations in vertical camber, to achieve a satisfactory completed structure. Correction may require replacement of the member.

Item 426

18. Post-Tensioning

1. DESCRIPTION

Furnish, store, and handle post-tensioning materials and perform post-tensioning of cast-in-place and precast structural units.

2. MATERIALS

Furnish materials that meet requirements of the most current versions of the following documents: Post-Tensioning Institute's *Guide Specification for Grouted Post-Tensioning* (PTI/ASBI M50) and Post-Tensioning Institute's *Specification for Grouting of Post-Tensioned Structures* (PTI M55).

2.1. **Prestressing Steel.** Furnish prestressing steel strand conforming to one of the following types:

- Seven-wire steel strand meeting DMS-4500, "Steel Strand, Uncoated Seven-Wire Stress Relieved and Low Relaxation for Prestressed Concrete," or
- Grade 150, high strength, coarse thread bars meeting ASTM A722.

2.2. **Post-Tensioning System.** Furnish a post-tensioning system following the minimum requirements for Protection Level 2 (PL-2) in accordance with PTI/ASBI M50. Prequalify post-tensioning systems using tests on complete tendons for compliance with the requirements of PTI/ASBI M50.

The following exceptions apply:

- The embedded parts of the anchorage are not required to be galvanized or epoxy coated,.
- Provide pre-packaged grouts in accordance with DMS-4670, "Grouts for Post-Tensioning" and Class C grout per PTI M55. Do not use grouts that exceed the manufacturers' recommend shelf life or 6 months, whichever is less.
- Provide unbonded single strand tendons in accordance with PTI M10.2-00: "Specification for Unbonded Single Strand Tendons."

3. EQUIPMENT

3.1. **Stressing Equipment.** Provide hydraulic jacks, pressure gauges, and other stressing equipment that meets PTI/ASBI M50.

3.2. **Grouting Equipment.** Provide grout mixing, testing, and pumping equipment that meets PTI M55.

4. CONSTRUCTION

The requirements of Item 420, "Concrete Substructures" and Item 422, "Concrete Superstructure" shall govern for cast-in-place construction. Item 424, "Precast Concrete Structural Members (Fabrication)," shall govern for precast concrete units or members.

4.1. **Qualifications of Personnel.** Perform all Work for post-tensioning, including duct and hardware installation, strand insertion, and tendon or bar stressing, under the direct supervision of an individual certified as a PTI Level 2 Bonded PT Field Specialist. Perform all grouting operations under the direct supervision of an individual who has received a Grouting Technician Certification from the American Segmental Bridge Institute (ASBI).

4.2. **Required Submittals.** Submit information required in this Section for post-tensioned Elements, in addition to forming and falsework Construction Documents required by Item 420, "Concrete Substructures" and Item 424, "Precast Concrete Structural Members (Fabrication)." Include all necessary construction information in these submittals for cast-in-place and precast construction including, but not limited to the information required in this Section.

4.3. **Design Calculations.** Provide design procedures, coefficients, allowable stresses, tendon spacing, and clearances in accordance with the AASHTO *LRFD Bridge Design Specifications* and PTI/ASBI M50. Submit sufficient calculations to support the proposed system and method of post-tensioning including friction loss diagrams. When the required jacking force for a particular type of tendon, duct, and configuration is furnished on the Design Documents, design calculations are not required except to adjust for conditions different from those shown on the Design Documents.

4.3.1. **Post-Tensioning Details**. Provide drawings with details that meet the requirements of PTI/ASBI M50 and this specification.

4.3.2. **Grouting Plan**. Submit for approval written grouting procedures at least 4 weeks before the start of the Element's construction. Include items required by PTI M55.

Include the names of people responsible for PT installation and grouting operations, with the foreman of each grouting crew certified as a PTI Level 2 Bonded PT Field Specialist and ASBI Certified Grouting Technician.

4.4. **Packaging, Storing, and Handling of Post-Tensioning Components.** Package, store, and handle post-tensioning steel, grout, duct, and other accessories in accordance with PTI/ASBI M50 and PTI M55. Acceptance and rejection criteria for strand shall follow PTI/ASBI M50 and PTI M55.

The following exceptions apply:

- Grout storage onsite shall be limited to 30 Days.
- Install grout caps and ensure vents are closed at all times so that water and other contaminants cannot enter the duct before strand installation.
- Do not flush ducts at any time.

4.5. **Duct and Prestressing Steel Installation for Post-Tensioning.** Follow PTI/ASBI M50 for duct and prestressing steel installation procedures and requirements. Verify that concrete strength requirements on the Design Documents are met for stressing and staged loading of post-tensioned structural Elements.

Stress the tendons within 7 Days of installing the strand in the ducts. Follow the tensioning procedure noted in the approved post-tensioning details.

4.6. **Grouting.** Grout in accordance with PTI M55.

Grout within 14 Days of tendon stressing. Obtain approval to extend the grouting time before stressing tendons.

Do not allow the grout temperature to exceed 85°F during mixing and pumping. Do not grout when the ambient temperature is below 35°F. Field-test the grout in accordance with Table 1 during grout installation. Perform field-testing by trained personnel while witnessed by TxDOT. Pump at the lowest pressure possible that will maintain a continuous flow of grout.

Table 1

Requirements for Field-Testing of Grout

Test	Frequency	Requirement
Schupak Pressure Bleed Test (ASTM C1741)	1 per Day	per DMS-4670
Fluidity test (Tex-437-A, Method 2)	2 every 2 hr. 2 min. per Day	per DMS-4670
Compressive Strength test (3” × 6” cylinders)	1 per Day	per DMS-4670
Mud Balance test (Tex-130-E Part II)[1]	2 per Day	per DMS-4670

Take one sample from the mixer and one sample from the farthest duct outlet.

Item 427

19. Surface Finishes for Concrete

1. DESCRIPTION

Finish concrete surface as specified.

2. MATERIALS

Furnish materials in accordance with this Article for the type of surface finish specified.

2.1. **Coatings.**

2.1.1. **Adhesive Grout and Concrete Paint**. Provide coatings in accordance with DMS-8110, "Coatings for Concrete." Match color of coating with Federal Standard 595B color 35630, concrete gray.

2.1.2. **Opaque Sealer**. Provide penetrating-type sealer in accordance with DMS-8110, "Coatings for Concrete." Match color of coating with Federal Standard 595B color 35630, concrete gray.

2.1.3. **Silicone-Based Paint**. Provide silicone resin emulsion paint (SREP) meeting the requirements of DMS-8141, "Paint, Silicon Resin for Concrete." Match color of coating with Federal Standard 595C color 35630, concrete gray.

2.2. **Exposed Aggregate Finish.** Provide approved aggregates meeting the grading requirements shown on the Design Documents. Provide gravel consisting of predominantly rounded particles. Use crushed stone when a bush-hammered finish is desired. Provide a concrete surface retardant. Provide clear Type II permanent anti-graffiti coating in accordance with DMS-8111, "Anti-Graffiti Coatings."

3. EQUIPMENT

TxDOT may require demonstration of the equipment's capabilities.

3.1. **Low-Pressure Water Blasting.** Use equipment capable of supplying a minimum pressure at the nozzle end of 3,000 psi at a minimum flow rate of 3 gpm. Use a 0° rotary, vibratory, or wobble-type nozzle. Use equipment capable of including abrasives in the water stream when specified on the Design Documents.

3.2. **Abrasive Blasting.** Use equipment with filters to produce oil-free air and also water-free air when dry air is required.

3.3. **Slurry Blasting.** Use equipment capable of combining air and abrasives with water to form a wet blast media capable of cleaning and preparing surface without creating dust.

3.4. **Spraying.** Use equipment with fluid and air pressure regulators and gauges to allow for adjustment to produce a uniform spray pattern for spray applications.

3.5. **Off-the-Form Finish Forms.** Use nonstaining, nonporous, high-quality forming materials (e.g., steel or medium-density and high-density overlaid plywood forms). Use steel or high-density overlaid plywood forms when the same form will be used more than twice.

3.6. **Form Liners.** Provide form liners capable of producing a patterned finish as shown on the Design Documents. Use form liners that provide a clean release from the concrete surface without pulling or breaking the textured concrete.

4. CONSTRUCTION

Provide the finish specified on the Design Documents for the specific surface areas.

4.1. **Surface Areas of Finish.** "Surface area of finish" designates the areas where the specified surface is to be applied.

4.1.1. **Surface Area I**:

- surfaces of railing;
- exterior vertical faces of fascia beams, slabs, slab spans, arches, and box girders;
- the outside bottom surface of fascia beams and girders;
- the underside of overhanging slabs to the point of juncture of the supporting beam;
- the entire underside of slab spans when shown on the Design Documents;
- vertical and underside surfaces of bents and piers;
- all surfaces of tie beams, abutments, bridge wingwalls, culvert headwalls, wingwalls, and retaining walls exposed to view after all backfill and embankment is placed; and
- all other exposed surfaces shown on the Design Documents to require surface treatment.

4.1.2. **Surface Area II**: Surfaces of railing, all wingwalls, and the exterior vertical faces of slabs.

4.1.3. **Surface Area III**: Only the top and roadway faces of all concrete railing and bridge wingwalls.

4.1.4. **Surface Area IV**: Areas designated on the Design Documents.

4.2. **Coatings. Apply the coating specified on the Design Documents.**

4.2.1. **Preparation**. Clean the surface thoroughly before applying a coating by chemical cleaning, if required, and by blast cleaning.

Submit a containment plan that details the procedures proposed to keep public property, private property, and the environment from being adversely affected by the cleaning and painting operations. Do not discharge washwater into body of water or conveyance without TCEQ approval. Collect and properly dispose of any paint or debris dislodged as a result of cleaning operations.

4.2.1.1. **Chemical Cleaning**. Clean surfaces contaminated with oil, grease, or other contaminants by scrubbing the area with an approved detergent or other concrete cleaning material before blast cleaning. Do not use a solvent that will stain the surface or inhibit coating adhesion. Perform the following test to check for surface contamination of oil type materials:

- Spray the surface with a fine mist of potable water.
- Examine the area to see if water beads up.
- Clean the surface if beading is found.

4.2.1.2. **Blast Cleaning**. Blast clean the designated surface to remove weak surface material, curing compound, and other contaminants before applying a specified coating, leaving a lightly etched uniformly textured surface. Use an approved abrasive propelled by oil-free air with or without the addition of potable water, or blast with potable water with or without the addition of an approved abrasive at sufficient pressure to effectively clean and prepare the surface. Maintain the stand-off-distance of the nozzle to a maximum of 12 in. from the surface being cleaned when water blasting.

Do not damage concrete surface by gouging, spalling, or exposing coarse aggregate by the blasting operation.

Blow clean oil- and moisture-free air on all surfaces with sufficient pressure to remove loose particles immediately before application of any coating. Perform the following test to check for surface cleanliness:

- Press a 10 in. long strip of 2 in. wide clear packing tape on the surface by rubbing with moderate pressure.
- Grasp the free end of the tape, and remove the tape from the surface with a sharp jerk.
- Examine the surface of the tape for clinging particles.

Continue cleaning the concrete surface until there are no particles clinging to the tape surface for subsequent tests. An additional test that can be used to check the surface for dust is to wipe the surface with a dark cloth and then examine the cloth for discoloration.

4.2.2. **Application**. Mix coating materials thoroughly with a mechanical mixer at a speed that causes the mixture to rotate entirely in the container. Ensure complete mixing by probing the container with a stirring device searching for non-dispersed or settled material.

Apply coatings once the new concrete has aged a minimum of 28 Days except for the adhesive grout coating. Do not apply coatings when weather conditions will be detrimental to the final surface finish as determined by TxDOT. Do not apply coatings when surface temperature of the concrete exceeds 95°F.

Apply coatings to obtain a consistent color and texture.

4.2.2.1. **Adhesive Grout**. Apply coating on a moistened surface to a uniform minimum thickness of 1/16 in. Apply when ambient temperature is at least 50°F.

4.2.2.2. **Concrete Paint**. Apply the coating on a dry surface in 2 coats for a total maximum application rate of 150 sq. ft. per gallon. Match the color of the applied coating with the color standard shown on the Design Documents. Do not thin material. Apply when ambient temperature is between 50°F and 100°F.

4.2.2.3. **Opaque Sealer**. Apply the coating to a dry surface in 2 coats for a total maximum application rate of 200 sq. ft. per gallon. Match the color of the applied coating with the approved color standard shown on the Design Documents. Do not thin the material. Apply when ambient temperature is between 40°F and 100°F.

4.2.2.4. **Silicone Resin Paint**. Apply the coating on a dry surface in 2 coats at a rate not exceeding 300 sq. ft. per gallon per coat. Do not thin the material. Wait a minimum of 12 hr. between coats. Apply when ambient temperature is between 50°F and 95°F.

Repair surface finish where coating has been applied that exhibits peeling, flaking, or discoloration or has been damaged during construction. Remove defective or damaged coating. Clean and recoat repair area in accordance with the requirements of this Item.

4.3. **Special Surface Finishes.** Submit a Work plan for any special finish shown on the Design Documents. Include in the Work plan the type of aggregates, materials, variation of panel or pattern arrangement, dimensions, construction methods, and other features affecting the Work as is necessary for the "Special Surface Finish" specified.

4.3.1. **Blast Finish**. Provide surface profile as shown on the Design Documents, or meet the minimum requirements of Item 427.4.2.1., "Preparation." Construct a 4 × 4 ft. sample panel using the same concrete used in construction of the member to receive the blast finish. Prepare the surface of the sample panel to meet the specified finish, and obtain approval of the sample finish. Use the approved sample panel finish as the standard for surfaces requiring a blast finish.

4.3.2. **Slurry Coat Finish**. Provide cementitious slurry coat finish to concrete surfaces within 14 Days of placing concrete or later as approved. Water blast surface to moisten surface before application when application of slurry coat occurs more than 14 Days after placing concrete. Do not apply slurry coat finish to surfaces receiving another type coating finish.

Submit for approval proposed slurry recipe including cement, latex concrete additive, with or without sand, and other additives before application. Tint mixture of slurry as specified on the Design Documents. Maintain consistent slurry throughout Project only modifying recipe to account for color variations being noticed as Work progresses.

Rub in slurry with carborundum stone, stiff bristle brush, or other approved device. Limit thickness of applied slurry to a maximum of 1/16 in. thick. Demonstrate application methods for slurry coat and obtain approval of proposed surface. Apply slurry coat to obtain a tightly adhering cementitious finish to concrete surface. Remove material and reapply if slurry coat is not tightly adhering or is cracked.

4.3.3. **Rub Finish**. Provide a finish to the surface by rubbing the surface with a carborundum stone or other approved material. Begin rubbing the surface immediately after forms have been removed. Provide blast finish or other finish if rubbing surface is delayed to the point where the surface is dry and unable to be rubbed to produce an acceptable finish. Perform the requirements to obtain the ordinary surface finish specified in Item 420.4.13., "Ordinary Surface Finish," concurrently with rubbing the surface. Rub concrete-patching areas after the patch material has thoroughly set and blend the patch in with the surrounding area to produce a surface with uniform color and texture where concrete patching is performed.

Keep the surface continuously wet after form removal until the rubbing is complete. Rub the surface sufficiently to bring the wetted concrete surface to a paste producing a smooth dense surface without pits, form marks, or other irregularities. Do not use cement grout to form the paste on the surface. Stripe the surface with a brush to conceal the rubbing pattern and allow the paste to reset. Wash the concrete with potable water after the paste has sufficiently set to leave it with a neat and uniform appearance and texture. Apply membrane curing, if required, in accordance with Item 420, "Concrete Substructures," after rubbing is complete.

4.3.4. **Off-the-Form Finish**. Provide a finish with minimal surface defects and uniform color and texture by using non-staining, non-porous, high-quality forming materials. Use the same type of forming materials for like Elements for the entire structure.

Use mortar-tight forms to prevent leakage and discoloration. Seal joints with compressible gasket material, caulk, tape, or by other suitable means that are not detrimental to the concrete finish if necessary. Use one brand and type of form-release agents for all surfaces. Do not use barrier-type (wax, fuel oil, carrier oil, etc.) release agents. Use form-release agents containing a rust inhibitor on steel forms. Clean rust off steel forms before use. Use plywood that will not cause discoloration of the concrete surface.

Direct special attention to consolidation and vibration of the concrete around the form surfaces to minimize bug holes. Modify concrete placement and vibration techniques if surface contains an excessive amount of bug holes. Remove all forms without interruption once form removal begins to prevent discoloration due to differing form curing times.

Do not use membrane curing on surfaces with off-the-form finish.

Repair honeycombed and spall areas with least dimension larger than 2 in. in accordance with the concrete surface repair procedures outlined in Item 420, “Concrete Substructures,” to obtain an ordinary surface finish as defined in Item 420.4.13., “Ordinary Surface Finish.” Patch honeycombed and spall areas with least dimension greater than 3/4 in. but smaller than 2 in. by filling defect with repair material omitting the chipping operation. Do not patch honeycombed and spall areas with least dimension smaller than 3/4 in. Perform required repairs as soon as forms are removed. Match repair material color and texture with surrounding concrete surfaces. Minimize the area of repair by not smearing the repair material over acceptable concrete surfaces in an attempt to blend the repair with the surrounding concrete. Cut out form ties at least 1/2 in. below the surface, and patch accordingly. Perform repair Work as soon as possible after removing forms so that concrete and repair material have similar ages. Replace or refurbish the forms when TxDOT determines defective formwork is causing an excessive amount of repair Work.

4.3.5. **Form Liner Finish**. Provide patterned finish as shown on the Design Documents. Do not splice form liner panels in a way that causes a noticeable transition or line between pieces. Wash and clean form liners after each use when the forms can be reused. Replace form liners that have become damaged or worn.

Construct a sample panel for each form liner finish. Approval is required to verify the sample panel meets the requirements of the Design Documents and specifications before beginning Work. Upon approval, the sample panel becomes the model panel that all other Work shall be compared against. Deviation in color, grade, or depth from the model panel is grounds for rejection of the form liner finish. Removal of defective Work may be necessary as determined by TxDOT and in accordance with the surface finish requirements outlined in Item 420, “Concrete Substructures,” to obtain an ordinary surface finish as defined in Item 420.4.13., “Ordinary Surface Finish.”

Seal all form liner joints to prevent leakage at the surface.

4.3.6. **Exposed Aggregate Finish**. Provide exposed aggregate finish as indicated on the Design Documents. Provide a depth of finish between 3/8 in. and 1/2 in..

Apply a concrete surface retarder that penetrates approximately 1/4 in. into the forms or concrete surface to help achieve the desired finish. Apply 2 or 3 coats to wood forms to account for absorption if necessary. Tape or caulk form joints to prevent escape of the retarder during

the placing operations. Protect the form surfaces from sun and rain while exposed to the atmosphere. Re-treat form surfaces with retarder if disturbed. Protect adjacent areas of concrete not requiring exposed aggregate finish from the retarder.

Remove forms 12 to 15 hr. after concrete placement but not before concrete has gained sufficient strength to support the self-weight of the member. Expose the aggregate for the finish immediately after form removal. Remove the grout paste covering the aggregate to be exposed by an approved method. Do not loosen the aggregate by the grout removal operation. Maintain required curing on all surfaces except for the time while the aggregate is being exposed. Cure using wet mats or membrane after the aggregate is exposed.

Repair defective areas as determined by TxDOT.

Re-clean exposed aggregate surfaces by an approved method. Apply a coat of clear Type II permanent anti-graffiti coating to cleaned exposed aggregate surface. Apply anti-graffiti coatings by spray, roller, or brush at the application rates recommended by the manufacturer.

Item 428

20. Penetrating Concrete Surface Treatment

1. DESCRIPTION

Prepare surface and apply a penetrating sealant treatment to concrete surfaces.

2. MATERIALS

Provide penetrating surface treatment in accordance with DMS-8140, "Concrete Surface Treatment (Penetrating)."

3. CONSTRUCTION METHODS

Apply surface treatment to locations shown on the Design Documents. Treat the upper surfaces of the roadway slab (including direct traffic culverts), bridge sidewalks and medians, the inside faces of curbs, and concrete rails for bridge decks. Do not treat surfaces given a higher finish as defined in Item 427, "Surface Finishes for Concrete.".

Refer to the manufacturer's specifications for instruction on the use of the treatment material in addition to the requirements of this Item.

Clean the concrete surfaces using shot or abrasive blasting followed by vacuuming and air blasting as needed, to remove all visible curing compound, oils, and any other contaminants that retard or prevent penetration of the mixture before treatment application. Additionally, roughen vertical and overhead steel formed surfaces that are smooth in appearance by abrasive blasting or other approved method. Completely remove all spent abrasive media. Demonstrate the method of cleaning before proceeding.

Do not damage the concrete surface to the point the coarse aggregate is exposed. Apply the treatment material after the entire cleaned surface has been accepted.

Apply the treatment material no sooner than 28 Days after casting the concrete.

Delay the treatment to concrete riding surfaces requiring mechanical grinding or grooving until approved to proceed.

Apply treatment material to a dry surface no sooner than 24 hours after any water has reached the concrete surface. Apply treatment material when surface temperature is between 40°F and 100°F.

Do not dilute or alter the treatment material.

Apply the treatment material at a rate of 100 sq. ft. of surface area per gallon. Treat the upper side of horizontal and near-horizontal surfaces in 1 pass or coat. Treat the vertical and overhead surfaces in 2 passes or coats. Apply the first coat to fully saturate the surface and until refusal.

Allow the first coat to be absorbed, but do not allow the surface to completely dry before applying the second coat. Wait no longer than 1 hr. for application of the second coat.

Use a spray applicator equipped with a spray bar to apply the treatment material to deck surfaces.

Apply the treatment material at a uniform rate, covering the entire surface being treated.

Follow the treatment material manufacturer's specifications regarding required lapse time before traffic is permitted on the treated surface.

Item 429

21. Concrete Structure Repair

1. DESCRIPTION

Remove and repair unsound, delaminated, or spalled concrete.

2. MATERIALS

Submit all proposed repair materials for approval. Provide materials as outlined in the TxDOT *Concrete Repair Manual* and in accordance with the requirements of the following Items.

- Item 421, "Hydraulic Cement Concrete"
- Item 431, "Pneumatically Placed Concrete"
- Item 440, "Reinforcement for Concrete"
- DMS-4655, "Concrete Repair Materials"
- DMS-6100, "Epoxies and Adhesives"

2.1. **Concrete Repair Materials.** Provide repair materials suitable for the appropriate horizontal, vertical, or overhead application meeting the requirements in DMS-4655, "Concrete Repair Materials." Use Type A materials when rapid strength gain is necessary and Type C (non-rapid) materials for standard concrete repairs. Use Type B ultra-rapid hardening materials only if indicated on the Design Documents. Prepackaged repair materials not meeting the requirements of DMS-4655, "Concrete Repair Materials," or not on TxDOT's list of pre-approved materials may be used only with approval. Repair corrosion-induced spalls using materials that do not contain corrosion inhibitors. TxDOT may disallow any product based on its structural compatibility or appearance.

2.2. **Pneumatically Applied Materials.** Pneumatically applied concrete or mortar may be used, if approved, for any repair thickness. Provide and place pneumatically applied concrete in accordance with Item 431, "Pneumatically Placed Concrete." Prepare trial batches of any proposed repair material and application method.

2.3. **Epoxy Mortars.** Use Type VIII neat epoxy or epoxy mortar per DMS-6100, "Epoxies and Adhesives," for repairs less than 1 in. thick.

2.4. **Concrete.** Provide Class C concrete for substructures, Class S concrete for decks, or concrete of the specified design strength as follows:

- as an option for vertical/overhead repairs greater than 6 in. thick;
- for full or partial depth slab repairs;
- for replacement of entire members or Elements;
- as an option for horizontal repairs greater than 4 in. thick.

Submit a mix design for approval in accordance with Item 421, "Hydraulic Cement Concrete." Include all pertinent information on admixtures. Do not use corrosion-inhibiting admixtures.

2.5. **Steel.** Provide steel pins, studs, or expansion bolts with a minimum diameter of 1/8 in. and a minimum length of 2 in. to attach reinforcement at the locations shown on the Design Documents. Provide reinforcing steel, either welded wire fabric or reinforcing bars, as required by this Item.

3. CONSTRUCTION METHODS

Follow the procedures outlined in the TxDOT *Concrete Repair Manual*. Developer may propose alternate repair methods for review and approval before commencing Work.

Submit for approval all materials and methods of application at least 3 weeks before beginning any repair Work.

Repair locations shall be indicated on the Design Documents.

3.1. **Crack Repair.** Repair cracks.

3.2. **Repair of Defective Work.** Repair or replace defective areas and patched areas that have debonded after completion of curing.

Item 431

22. Pneumatically Placed Concrete

1. DESCRIPTION

Furnish and place pneumatically applied concrete for the construction of portions of structures, repairing concrete structures, encasement of structural steel members, lining ditches and tunnels, soil-nail walls, retaining walls, and other Work as shown on the Design Documents.

2. MATERIALS

Provide pre-bagged concrete materials for concrete structure repair and class of concrete shown on the Design Documents for other Work.

Submit pre-bagged materials information for approval. Material testing may be required before approval and installation test panels shall be required in accordance with Item 431.2.4., "Proportioning and Mixing."

Provide materials in accordance with the pertinent requirements of the following Items with the exceptions noted in Items 431.2.1., "Exceptions to Item 421, 'Hydraulic Cement Concrete,'" Item 431.2.2., "Exceptions to Item 440, 'Reinforcement for Concrete,'" and Item 431.2.3., "Exception to DMS-6310, 'Joint Sealants and Fillers.'"

- Item 420, "Concrete Substructures"
- Item 421, "Hydraulic Cement Concrete"
- Item 440, "Reinforcement for Concrete"
- DMS-4655, "Concrete Repair Materials"
- DMS-6310, "Joint Sealants and Fillers"

2.1. **Exceptions to Item 421, "Hydraulic Cement Concrete."** Provide a fine aggregate that meets the requirements of Item 421, "Hydraulic Cement Concrete," Table 4, Grade 1, and a coarse aggregate that meets the requirements of Item 421, "Hydraulic Cement Concrete," Table 3, Grade 7.

2.2. **Exceptions to Item 440, "Reinforcement for Concrete."** Provide mushroom headed steel anchors or expansion anchor hook bolts with a minimum diameter of 1/8 in. and a minimum length of 2 in. to attach reinforcement for the repair of concrete structures as shown on the Design Documents. Reinforcing steel may be either welded wire fabric or reinforcing bars.

2.3. **Exception to DMS-6310, "Joint Sealants and Fillers."** Provide a preformed bituminous fiber material.

2.4. **Proportioning and Mixing.** Submit for approval a proposed mix design conforming to the basic mix design requirements provided in Table 1.

Table 1

Classes of Concrete

Class	Ratio of Cement to Total Aggregate[1]	Minimum 7-Day Compressive Strength (psi)[2]
I	1:4	3,000
II	1:5	2,500

More cement may be used when approved.

Higher minimum strengths may be specified.

Measure the cement and aggregates by volume and mix with enough water to achieve the desired consistency. Use as little water as possible to achieve sufficient adhesion. Mix concrete sufficiently dry so it will not sag or fall from vertical or inclined surfaces or separate in horizontal Work.

Prepare test panels using the same air pressure, nozzle tip, and position to be used for the production Work to verify the mix design before approval. Apply a 3 in. layer of concrete to a plywood sheet with minimum dimensions of 18 in. × 18 in. for each test panel. Cure the test panels in the same manner as the proposed Work.

Take three cores, each 2 in. in diameter, out of each test panel and test in compression at seven Days in accordance with Tex-424-A. The mix design will be approved when the average strength of the three cores conforms to the strengths shown in Table 1. Provide additional test panels if there are any changes in materials, equipment, or nozzle operator during the Work.

3. CONSTRUCTION

3.1. **Qualification.** Provide experienced personnel able to produce concrete satisfying plan requirements and of uniform quality as required. Provide documentation of nozzle operator's qualification for the process proposed and orientation of the application meeting the minimum requirements when shown on the Design Documents.

Demonstrate nozzle operator's abilities by constructing test panels before commencement of Work. Orient test panels to match application direction of placement. Include reinforcing steel in the test panel with similar spacing as in member. Qualification test panels may be used for mix verification in accordance with Item 431.2.4., "Proportioning and Mixing."

3.2. **Surface Preparation.** Grade the area of proposed Work accurately to the elevation and dimensions shown on the Design Documents when concrete is to be placed against soil. Compact with sufficient moisture to provide a firm foundation and to prevent absorption of water from the concrete but without free surface moisture.

Remove paint, rust, loose mill scale, grease or oil, and all other foreign materials that may reduce the bond of the concrete to the steel when concrete is used to encase structural steel members.

Remove all deteriorated or loose material by chipping with pneumatic, electric, or hand tools when concrete is placed against concrete or rock. Cut square or slightly undercut shoulders

approximately 1 in. deep along the perimeter of repair areas. Sandblast the surface to clean all rust from exposed reinforcing steel and to produce a clean rough-textured surface on the concrete or rock. Wet the surface against which the concrete will be placed for at least 1 hour with potable water. Place the concrete when the surface has dried to a saturated surface-dry (SSD) condition. Achieve SSD conditions by high-pressure water blasting 15 to 30 min. before placing the repair material, soaking a minimum of 12 hr., or by other approved methods. An SSD condition is achieved when the surface remains damp when exposed to sunlight for 15 min.

Provide joints, side forms, headers, and shooting strips for backing or paneling. Use ground or gauging wires where necessary to establish thickness, surface planes, and finish lines.

3.3. **Reinforcement.** Place and secure reinforcement to ensure there is no displacement from impact of applying pneumatically placed concrete. Place reinforcing bars at a spacing not less than 2-1/2 in. Support reinforcing wire fabric or bars using mushroom headed anchors, expansion hook bolts, or grouted rebar capable of resisting a pullout force of 2,500 lb. Space anchors no more than 12 in. center-to-center on overhead surfaces, 18 in. center-to-center on vertical surfaces, and 36 in. center-to-center on top horizontal surfaces. Use at least 3 anchors in each individual patch area. Do not use explosive force to shoot anchors into concrete. Check the resistance to pullout of the reinforcing anchors when directed. Notify TxDOT before installation of the anchors. Locate anchors so there is no damage to prestressing tendons or conduits embedded in the concrete.

Use reinforcement when performing repair Work in all areas where the thickness of the concrete will exceed 1-1/2 in. Use a single layer of either 2 × 2 – W1.2 × W1.2 or 3 × 3 –W1.5 × W1.5 of welded wire fabric, or approved equivalent. Use a single layer of wire fabric to reinforce each 4 in. thickness of patch or fractional part in areas where the concrete thickness exceeds 4 in. Encase completely each layer of wire fabric in concrete that has taken its initial set before installing the succeeding layer of wire fabric. Place the reinforcing fabric parallel to the finished surface, and support it so it will be at least 3/4 in. out from the surface to be covered. Provide at least 1 in. clearance between the finished concrete surface and all steel items including anchors, reinforcing bars, and wire fabric. Lap adjacent fabric sheets at least 6 in. and tie together securely at a spacing of no more than 18 in. Pre-bend fabric before installing to fit around corners and into re-entrant angles.

Pre-bend the welded wire fabric for encasement of steel members using a template to conform as nearly as possible to the outlines of the members to be encased. Drill holes between 1/2 and 1 in. in diameter in the webs of the members as close as possible to the flanges to allow for attachment of the reinforcing fabric. Space these holes at approximately 3 ft. on center. Use 3/8-in. diameter rods placed through these holes to secure the reinforcing fabric. Hold the reinforcing fabric at least 3/4 in. out from the surface of the steel member. Lap adjacent fabric sheets at least 6 in. and tie together at a spacing of no more than 12 in.

3.4. **Pneumatic Placement of Concrete.** Pneumatically applied concrete can be either dry-mix or wet-mix. The dry-mix process consists of dry-mixed fine aggregate and hydraulic cement to which water is added immediately before its pneumatic expulsion from a nozzle. The wet-mix process consists of mechanically premixed concrete pneumatically applied through a nozzle.

3.4.1. **General**. Place the concrete when the ambient temperature is above 35°F and rising and material temperature is between 50°F and 90°F for wet-mix and below 100°F for dry-mix. Do not place concrete against a surface containing frost, ice, or standing water. Protect concrete from freezing or quick drying after placement. Apply the concrete using pneumatic equipment that sprays the

mix onto the prepared surface at a velocity less than 100 ft. per second for construction of portions of structures, repairing concrete structures, or encasement of structural steel members. Minimize rebound and produce a compacted dense homogenous mass. Do not apply concrete if high winds will prevent proper application or if rain could wash out the concrete.

Hold the nozzle approximately 2 to 4 ft. from the surface and position it so the concrete impinges nearly at right angles to the surface being covered. Use shooting strips to ensure straight lines, square corners, and a plane surface of concrete. Place to keep the trapping of rebound to a minimum. Slope the concrete off to a thin edge at the end of each day's Work or at similar stopping periods requiring construction joint. Thoroughly clean and wet previously placed concrete before placing an adjacent or additional section. Apply a sufficient number of coats to obtain the required thickness. Place coats on vertical and overhead surfaces in layers of such thickness to prevent sloughing, sagging, tearing, or debonding. Provide a sufficient interval between successive layers in sloping, vertical, or overhead Work to allow initial but not final set. Clean the surface to remove the thin film of laitance to provide for a bond with succeeding applications. Remove rebound and accumulated loose sand from the surface to be covered before placing of the original or succeeding layers of concrete. Correct any sags or other defects to the proper section.

Place concrete to completely encase reinforcing steel. Encase reinforcing steel by shooting with sufficient velocity and plasticity that material flows around and behind reinforcement.

Apply the concrete using either the wet-mix or dry-mix process. Mix the materials thoroughly and uniformly using a paddle or drum type mixer designed for pneumatic application. Wet-mix process applications can use transit-mix concrete. Do not use the wet-mix process for repair of damaged concrete.

Clean mixing and placing equipment at regular intervals. Inspect the nozzle liner and water and air injection system daily; replace worn parts as necessary.

Do not reuse rebound or overspray concrete.

3.4.2. **Dry-Mix Process**. Use a compressor or blower capable of delivering a sufficient volume of oil-free air at the pressure shown in Table 2. Maintain steady pressure throughout the placing process.

Use a water pump with the size and capacity to deliver water to the nozzle with a pressure at least 15 psi more than the required air pressure.

The values shown in Table 2 are based on a hose length of 150 ft. with the nozzle less than 25 ft. above the delivery equipment. Increase operating pressure approximately 5 psi for each additional 50 ft. of hose and approximately 5 psi for each 25 ft. the nozzle is raised.

Table 2

Compressor Capacities

Compressor Capacity, CFM	Hose Diameter, in.	Maximum Size of Nozzle Tip, in.	Operating Air Pressure Available, psi
250	1	3/4	40

Compressor Capacity, CFM	Hose Diameter, in.	Maximum Size of Nozzle Tip, in.	Operating Air Pressure Available, psi
315	1-1/4	1	45
365	1-1/2	1-1/4	55
500	1-5/8	1-1/2	65
600	1-3/4	1-5/8	75
750	2	1-3/4	85

3.4.3. **Wet-Mix Process**. Operate the pump at a line pressure between 100 psi and 300 psi. Use delivery hoses between 1-1/2 in. and 3 in. in diameter. Use mixing equipment capable of thoroughly mixing the materials in sufficient quantity to maintain continuous placement.

3.5. **Construction Joints.** Use a square butt joint where the joint is subject to compressive stress or is over existing construction joints. Use tapered or square butt joints at other locations. Square the outside 1 in. of tapered joints perpendicular to the surface.

3.6. **Finish.** Use a sharp trowel to cut off all high spots after the concrete has been placed to the desired thickness or screed to a true plane as determined by shooting strips or by the original concrete surface. Lightly apply cutting screeds, where used, to all surfaces so as not to disturb the concrete for an appreciable depth. Work in an upward direction when concrete is applied on vertical surfaces. Give the finished concrete a final flash coat of about 1/8 in. Obtain a uniform appearance on all exposed surfaces.

3.7. **Curing.** Cure encasements with water for 4 Days. Cure repairs and structural construction using either a piece of wet burlap taped over the repaired area with a covering of 4-mil minimum plastic sheet also taped in place or membrane curing as approved. Overlap the burlap with the plastic sheet and continuously tape the edges with a tape at least 3 in. wide (air duct tape or better) to completely enclose the mat and hold in moisture. Cure in this manner for 4 Days. Curing is not required for soil-nail walls unless walls are the final exposed surfaces, which in this case, cure at least 4 Days in accordance with Item 420, “Concrete Substructures.” Apply membrane curing in accordance with Item 420.2.7., “Curing Materials” for tunnel and ditch linings and vertical or overhead patches as approved.

3.8. **Repair of Defects.** Repair or replace debonded areas.

Item 432

23. Riprap

1. DESCRIPTION

Furnish and place concrete, stone, cement-stabilized, or special riprap.

2. MATERIALS

Furnish materials in accordance with the following Items.

- Item 420, "Concrete Substructures"
- Item 421, "Hydraulic Cement Concrete"
- Item 431, "Pneumatically Placed Concrete"
- Item 440, "Reinforcement for Concrete"
- DMS-6200, "Filter Fabric"

2.1. **Concrete Riprap.** Use Class B Concrete.

2.2. **Pneumatically Placed Concrete Riprap.** Use Class II concrete that meets Item 431, "Pneumatically Placed Concrete."

2.3. **Stone Riprap.** Use durable natural stone with a bulk specific gravity of at least 2.50 as determined by Tex-403-A. Provide stone that, when tested in accordance with Tex-411-A, has weight loss of no more than 18% after 5 cycles of magnesium sulfate solution and 14% after 5 cycles of sodium sulfate solution.

Perform a size verification test on the first 5,000 sq. yd. of finished riprap stone for all types of stone riprap. Test the riprap stone in accordance with ASTM D5519. Additional tests may be required. Place additional riprap once the initial 5,000 sq. yd. of riprap has been approved.

Provide grout or mortar in accordance with Item 421, "Hydraulic Cement Concrete," when specified. Provide grout with a consistency that will flow into and fill all voids.

Provide filter fabric in accordance with DMS-6200, "Filter Fabric." Provide Type 2 filter fabric for protection stone riprap. Provide Type 2 filter fabric for Type R, F, or Common stone riprap when shown on the Design Documents.

2.3.1. **Type R**. Use stones between 50 and 250 lb. with at least 50% of the stones heavier than 100 lb.

2.3.2. **Type F**. Use stones between 50 and 250 lb. with at least 40% of the stones heavier than 100 lb. Use stones with at least 1 broad flat surface.

2.3.3. **Common**. Use stones between 50 and 250 lb. Use stones that are at least 3 in. in their least dimension. Use stones that are at least twice as wide as they are thick. When shown on the Design Documents or approved, material may consist of broken concrete removed under the Contract or from other approved sources. Cut exposed reinforcement flush with all surfaces before placement of each piece of broken concrete.

2.3.4. **Protection**. Use boulders or quarried rock that meets the gradation requirements of Table 1. Both the width and the thickness of each piece of riprap must be at least 1/3 of the length. When shown on the Design Documents, material may consist of broken concrete removed under the Contract or from other approved sources. Cut exposed reinforcement flush with all surfaces before placement of each piece of broken concrete. Determine gradation of the finished, in-place, riprap stone in accordance with ASTM D5519.

Table 1

In-Place Protection Riprap Gradation Requirements

Size	Maximum Size (lb.)	90% Size[1] (lb.)	50% Size[2] (lb.)	8% Size[3] Minimum (lb.)
12 in.	200	80–180	30–75	3
15 in.	320	170–300	60–165	20
18 in.	530	290–475	105–220	22
21 in.	800	460–720	175–300	25
24 in.	1,000	550–850	200–325	30
30 in.	2,600	1,150–2,250	400–900	40

1. Defined as that size such that 10 percent of the total riprap stone, by weight, is larger and 90 percent is smaller.

2. Defined as that size such that 50 percent of the total riprap stone, by weight, is larger and 50 percent is smaller.

3. Defined as that size such that 92 percent of the total riprap stone, by weight, is larger and 8 percent is smaller.

TxDOT may require in-place verification of the stone size. Determine the in-place size of the riprap stone by taking linear transects along the riprap and measuring the intermediate axis of the stone at select intervals. Place a tape measure along the riprap and determine the intermediate axis size of the stone at 2 ft. intervals. Measure a minimum of 100 stones, either in a single transect or in multiple transects, then follow ASTM D5519 Test Procedure Part B to determine the gradation. Table 2 is a guide for comparing the stone size in inches to the stone weight shown in Table 1.

Table 2

Protection Riprap Stone Size[1]

Size	Dmax (in.)	D90 (in.)	D50 (in.)	D8 (in.)
12 in.	13.76	10.14–13.29	7.31–9.92	3.39
15 in.	16.10	13.04–15.75	9.21–12.91	6.39
18 in.	19.04	15.58–18.36	11.10–14.21	6.59
21 in.	21.85	18.17–21.09	13.16–15.75	6.88

24 in.	23.53	19.28–22.29	13.76–16.18	7.31
30 in.	32.36	24.65–30.84	17.34–22.72	8.05

1. Based on a Specific Gravity of 2.5 and using the following equation for the intermediate axis diameter $D = \{(12*W)/(Gs*62.4*0.85)\}^{1/3}$
   where:
   D = intermediate axis diameter in in.;
   W = weight of stone in lbs.;
   Gs = Specific Gravity of stone.
   Note—If the Specific Gravity of the stone is different than 2.5, then the above equation can be used to determine the appropriate size using the actual Specific Gravity.

If required , provide bedding stone that, in-place, meets the gradation requirements shown in Table 3. Determine the size distribution in Table 3 in accordance with ASTM D6913.

Table 3

Protection Riprap Bedding Material Gradation Requirements

Sieve Size (Sq. Mesh)	% by Weight Passing
3 in.	100
1-1/2 in.	50–80
3/4 in.	20–60
No. 4	0–15
No. 10	0–5

2.4. **Cement-Stabilized Riprap.** Provide aggregate that meets Item 247, “Flexible Base,” for the type and grade shown on Design Documents. Use cement-stabilized riprap with 7% hydraulic cement by dry weight of the aggregate.

2.5. **Special Riprap.** Furnish materials for special riprap according to the Design Documents.

3. CONSTRUCTION

Dress slopes and protected areas to the line and grade shown on the Design Documents before the placement of riprap. Place riprap and toe walls according to details and dimensions shown on the Design Documents.

3.1. **Concrete Riprap.** Reinforce concrete riprap with 6 × 6 – W2.9 × W2.9 welded wire fabric or with No. 3 or No. 4 reinforcing bars spaced at a maximum of 18 in. in each direction. Alternative styles of welded wire fabric that provide at least 0.058 sq. in. of steel per foot in both directions may be used if approved. A combination of welded wire fabric and reinforcing bars may be provided when both are permitted. Provide a minimum 6-in. lap at all splices. Provide horizontal cover of at least 1 in. and no more than 3 in. at the edge of the riprap. Place the first parallel bar no more than 6 in. from the edge of concrete. Use approved supports to hold the reinforcement approximately equidistant from the top and bottom surface of the slab. Adjust reinforcement during concrete placement to maintain correct position.

Sprinkle or sprinkle and consolidate the subgrade before the concrete is placed. All surfaces must be moist when concrete is placed.

Compact and shape the concrete once it has been placed to conform to the dimensions shown on Design Documents. Finish the surface with a wood float after it has set sufficiently to avoid slumping to secure a smooth surface or broom finish as approved.

Cure the riprap immediately after the finishing operation according to Item 420, "Concrete Substructures."

4.7. **Stone Riprap.** Provide the following types of stone riprap when shown on the Design Documents:

- **Dry Riprap**. Stone riprap with voids filled with only spalls or small stones.
- **Grouted Riprap**. Type R, F, or Common stone riprap with voids grouted after all the stones are in place.
- **Mortared Riprap**. Type F stone riprap laid and mortared as each stone is placed.

Use spalls and small stones lighter than 25 lb. to fill open joints and voids in stone riprap, and place to a tight fit.

Place mortar or grout only when the air temperature is above 35°F. Protect Work from rapid drying for at least 3 Days after placement.

Place filter fabric with the length running up and down the slope. Ensure fabric has a minimum overlap of 2 ft. Secure fabric with nails or pins. Use nails at least 2 in. long with washers or U-shaped pins with legs at least 9 in. long. Space nails or pins at a maximum of 10 ft. in each direction and 5 ft. along the seams. Alternative anchorage and spacing may be used when approved.

3.1.1. **Type R**. Construct riprap as shown in Figure 1 on the *Stone Riprap Standard* and as shown on the Design Documents. Place stones in a single layer with close joints so most of their weight is carried by the earth and not the adjacent stones. Place the upright axis of the stones at an angle of approximately 90° to the embankment slope. Place each course from the bottom of the embankment upward with the larger stones in the lower courses.

Fill open joints between stones with spalls. Place stones to create a uniform finished top surface. Do not exceed a 6-in. variation between the tops of adjacent stones. Replace, embed deeper, or chip away stones that project more than the allowable amount above the finished surface.

Prevent earth, sand, or foreign material from filling the spaces between the stones when the Design Documents require Type R stone riprap to be grouted. Wet the stones thoroughly after they are in place, fill the spaces between the stones with grout, and pack. Sweep the surface of the riprap with a stiff broom after grouting.

3.1.2. **Type F**.

3.1.2.1. **Dry Placement**. Construct riprap as shown in Figure 2 on the *Stone Riprap Standard*. Set the flat surface on a prepared horizontal earth bed, and overlap the underlying course to secure a lapped surface. Place the large stones first, roughly arranged in close contact. Fill the spaces between the large stones with suitably sized stones placed to leave the surface evenly stepped and conforming to the contour required. Place stone to drain water down the face of the slope.

3.1.2.2. **Grouting**. Construct riprap as shown in Figure 3 on the *Stone Riprap Standard*. Size, shape, and lay large flat-surfaced stones to produce an even surface with minimal voids. Place stones with the flat surface facing upward parallel to the slope. Place the largest stones near the base of the slope. Fill spaces between the larger stones with stones of suitable size, leaving the surface smooth, tight, and conforming to the contour required. Place the stones to create a plane surface with a variation no more than 6 in. in 10 ft. from true plane. Provide the same degree of accuracy for warped and curved surfaces. Prevent earth, sand, or foreign material from filling the spaces between the stones. Wet the stones thoroughly after they are in place, fill the spaces between them with grout, and pack. Sweep the surface with a stiff broom after grouting.

3.1.2.3. **Mortaring**. Construct riprap as shown in Figure 2 on the *Stone Riprap Standard*. Lap courses as described for dry placement. Wet the stones thoroughly before placing mortar. Bed the larger stones in fresh mortar as they are being place and shove adjacent stones into contact with one another. Spread excess mortar forced out during placement of the stones uniformly over them to fill all voids completely. Point up all joints roughly either with flush joints or shallow, smooth-raked joints.

3.1.3. **Common**. Construct riprap as shown in Figure 4 on the *Stone Riprap Standard*. Place stones on a bed excavated for the base course. Bed the base course of stone well into the ground with the edges in contact. Bed and place each succeeding course in even contact with the preceding course. Use spalls and small stones to fill any open joints and voids in the riprap. Ensure the finished surface presents an even, tight surface, true to the line and grades of the typical sections.

Prevent earth, sand, or foreign material from filling the spaces between the stones when the Design Documents require grouting common stone riprap. Wet the stones thoroughly after they are in place; fill the spaces between them with grout; and pack. Sweep the surface with a stiff broom after grouting.

3.1.3.1. **Protection**. Construct riprap as shown in Figure 5 on the *Stone Riprap Standard*. Place riprap stone on the slopes within the limits shown on the Design Documents. Place stone for riprap on the filter fabric to produce a reasonably well-graded mass of riprap with the minimum practicable percentage of voids. Construct the riprap to the lines and grades shown on the Design Documents or staked in the field. A tolerance of +6 in. and −0 in. from the slope line and grades shown on the Design Documents is allowed in the finished surface of the riprap. Place riprap to its full thickness in a single operation. Avoid displacing the filter fabric. Ensure the entire mass of stones in their final position is free from objectionable pockets of small stones and clusters of larger stones. Do not place riprap in layers, and do not place it by dumping it into chutes, dumping it from the top of the slope, pushing it from the top of the slope, or any method likely to cause segregation of the various sizes. Obtain the desired distribution of the various sizes of stones throughout the mass by selective loading of material at the quarry or other source or by other methods of placement that will produce the specified results. Rearrange individual stones by mechanical equipment or by hand if necessary to obtain a reasonably well-graded distribution of stone sizes. Use the bedding thickness shown and place stone for riprap on the bedding material to produce a reasonably well-graded mass of riprap with the minimum practicable percentage of voids if required on the Design Documents.

3.2. **Pneumatically Placed Concrete Riprap, Class II.** Meet Item 431, “Pneumatically Placed Concrete.” Provide reinforcement following the details on the Design Documents and Item 440, “Reinforcement for Concrete.” Support reinforcement with approved supports throughout placement of concrete.

Give the surface a wood-float finish or a gun finish. Cure the riprap with membrane-curing compound immediately after the finishing operation in accordance with Item 420, “Concrete Substructures.”

3.3. **Cement-Stabilized Riprap.** Follow the requirements of the Design Documents and the provisions for concrete riprap except when reinforcement is not required.

3.4. **Special Riprap.** Construct special riprap according to the Design Documents.

Item 434

24. Bridge Bearings

1. DESCRIPTION

Furnish and install bearings for the support of bridge superstructure and substructure members. Bridge bearings under this specification consist of the two following categories and subcategories:

1.1. Elastomeric Bridge Bearings:

- **Plain Elastomeric Bearings**. Consisting of elastomer only.
- **Laminated Elastomeric Bearings**. Consisting of alternating individual layers of elastomer and steel laminates, with or without a steel top plate and special components (steel guide bars and bottom plate).
- **Sliding Elastomeric Bearings**. Consisting of a steel top (sole) plate with a stainless steel facing (upper component) bearing on a lower component. The lower component consists of a layer of polytetrafluoroethylene (PTFE) recessed and bonded to a steel plate that is vulcanized to the top of a laminated elastomeric bearing pad with or without special components (steel guide bars and bottom plate).

Plain and laminated elastomeric bridge bearings are designated by hardness (durometer), size, and configuration and, in the case of laminated bearings, by the thickness of the individual layers of elastomer and the size and position of any steel top plates.

1.2. **High Load Multi-Rotational (HLMR) Bearings:**

- **Disc Bearings**. Consisting of a polyether urethane disc contained between upper and lower steel bearing plates. The bearing has a shear resisting mechanism to prevent relative horizontal movement of the bearing plates and transmit horizontal loads.
- **Pot Bearings**. Consisting of a plain elastomeric disc confined by a shallow steel cylinder (pot) and a steel piston which engages the cylinder sufficiently to prevent their relative horizontal movement.

Provision for sliding movements (if required) uses a separate steel top plate with stainless steel facing (upper component) bearing on a lower component, and a lower component with a layer of PTFE bonded to the top of the upper steel bearing plate of the HLMR assembly. If required on the Design Documents, restriction of lateral movement is provided by guide bars integrated with the steel top plate and interface components of the same stainless steel facing and PTFE layer.

HLMR bridge bearings are designated by configuration (fixed, multi-direction expansion, or guided expansion) and the vertical service reaction requirements. Fixed configurations allow rotation about the horizontal axis and prevent horizontal movement in all directions. Multi-direction expansion configurations allow rotation about the horizontal axis and horizontal movement in all directions. Guided expansion configurations allow rotation about the horizontal axis and horizontal movement in one direction as indicated on the Design Documents, while guide bars and keyways restrict horizontal movement in the orthogonal direction. Provide either

disc bearings or pot bearings. Provide a fabricator-designed HLMR bearing meeting the performance and dimensional criteria described on the Design Documents and in the Materials Article of this Item.

Bearings consisting of hinged steel bolster and rocker shoes, steel flat, cylindrical, or spherical bearings, and single/multiple steel roller bearings are not covered by this Item and must conform to Item 442, "Metal for Structures."

2. MATERIALS

2.1. **Plain and Laminated Elastomeric Bearings.** Furnish bearings produced by a manufacturer from elastomer formulations approved by TxDOT. TxDOT maintains a list of approved bridge bearing elastomer formulations.

2.1.1. **Elastomer**. Provide elastomer for bearings formulated from previously unvulcanized 100% virgin polychloroprene rubber polymers meeting the physical properties, heat resistance, and compression set requirements of AASHTO M 251, Table X1.1. Do not provide bearings containing previously vulcanized synthetic rubber or other synthetic rubber-like polymers. Perform material tests on the finished product in accordance with the applicable test methods. Do not use standard laboratory test slabs for this purpose. Prepare test specimens from the finished product in accordance with ASTM D3183.

Obtain approval for each elastomer formulation before use on TxDOT projects. Submit certified test results to TxDOT to prequalify and obtain approval of a particular formulation. Show actual test values obtained and the required values for the physical properties, heat resistance, and compression set of the elastomer when tested for compliance with the minimum requirements of AASHTO M 251, Table X1.1.

Forward samples (freight prepaid) to TxDOT or their contracted testing laboratory when directed.

Submit only elastomer of the type or types to be supplied. Submit prequalification samples consisting of 2 finished bearings typical of the formulation and workmanship for TxDOT projects. Submit 2 samples of each type when laminated and plain bearings are required. Laminated sample bearings may represent both plain bearings and laminated bearings for an elastomer formulation.

Plain sample bearings must measure 9 in. × 19 in. × 1 in. Laminated sample bearings must measure 9 in. × 14 in. × 1-1/2 in. with the following number of steel laminates:

- 50 durometer—3 steel laminates,
- 60 durometer—2 steel laminates, and
- 70 durometer—2 steel laminates.

Adhesion testing of laminated prequalification samples will be performed by TxDOT in accordance with Tex-601-J, Part I—Adhesion Test Method 1. Bond failure between the elastomer and steel laminates must occur as stated in this test method to constitute a passing test result. Presence of chlorinated compounds (neoprene) in the elastomer will be verified by TxDOT in accordance with Tex-601-J, Part IV—Chlorinated Compound Test Method.

Certify that the submitted samples are of the same basic elastomer formulation and of equivalent cure as the finished products to be furnished on TxDOT projects.

Complete prequalification testing shall be performed for each formulation at least once every 2 yr. and when necessary.

2.1.2. **Steel Laminates**. Provide steel laminates, for laminated bearings, of commercial grade steel strip or sheet with a thickness of 0.105 ±0.015 in.

2.1.3. **Steel Top Plates**. Provide steel top plates, when required for laminated bearings, in accordance with the Design Documents.

2.1.4. **Special Components**. Provide steel guide bars and bottom plates, when required for laminated bearings, in accordance with the Design Documents.

2.1.5. **Coatings.** Provide protective coatings for steel components materials in accordance with Item 445, "Galvanizing," or DMS-8104, "Paint, Shop Application for Structural Steel."

2.2. **Sliding Elastomeric Bearings**.

2.2.1. **Lower Component**.

2.2.1.1. **PTFE**. Furnish PTFE materials that are pure virgin polytetrafluoroethylene fluorocarbon resin, unfilled. The finished materials must exhibit the physical properties shown in Table 1.

2.2.1.2. **Laminated Elastomeric Bearing Pad and Steel Plate**. Furnish laminated elastomeric bearing pads in accordance with Section 434.2.1., "Plain and Laminated Elastomeric Bearings." Provide steel plates attached to laminated elastomeric bearing pads in accordance with the Design Documents.

Table 1

Required PTFE Physical Properties

Physical Property	Test Method	Value (Unfilled)
Tensile strength, psi	ASTM D4894	2,800 min.
Elongation, %	ASTM D4894	200 min.
Melting point	ASTM D4894	622 ±4°F
Specific gravity	ASTM D792	2.16 ±0.03

2.2.2. **Upper Component**.

2.2.2.1. **Steel Top (Sole) Plates**. Provide steel top (sole) plates in accordance with the Design Documents, and finished to ANSI #500 or better on the surface interfacing with the stainless steel sheet.

2.2.2.2. **Stainless Steel**. Provide Type 304 stainless steel sheet in accordance with ASTM A240. The thickness must be at least 1/16 in.

2.2.3. **Special Components**. Provide steel guide bars and bottom plates, when required for laminated bearings, in accordance with the Design Documents.

2.2.4. **Coatings**. Provide coating materials as required in accordance with Item 445, "Galvanizing" and DMS-8104, "Paint, Shop Application for Structural Steel."

2.3. **HLMR Bearings**.

2.3.1. **Structural Design**. Provide a fabricator-developed design for the HLMR (disc or pot) bearings, meeting the service and factored vertical load capacity, service and factored horizontal load capacity, rotational capacity, and translation capacity requirements indicated in the Design Documents and augmented by the requirements of this Item. Provide a bearing capable of transmitting 15% of the service vertical force as a factored horizontal load if no horizontal load capacity is provided in the Design Documents. Provide a design that uses sole plate geometry or a grout interface to accommodate the longitudinal and transverse aspects of the bridge grade, and does not require the bearing to accommodate this in rotation. If the bridge Element supported by the bearing is cambered for dead load to be applied after the bearing is positioned, the dead load design rotation of the elastomer may be neglected provided the fabricator-developed design has checked the bearing for this temporary condition to ensure no damage occurs and there is no metal-to-metal contact. Provide a design that meets the current versions of the AASHTO LRFD Bridge Design Specifications and AASHTO LRFD Bridge Construction Specifications. Assume the plan rotations do not include requirements for uncertainties and construction tolerance stipulated in the AASHTO Specifications.

2.3.2. **Maintenance Functionality**. Provide a fabricator-developed design that allows future removal with a maximum vertical jacking height of 1/4 in. after the load is removed. Provide a design with minimum 4-in. distance between the bottom of masonry plate and top of sole plate.

2.3.3. **Elements of HLMR Bearings**.

2.3.3.1. **Lower Component**.

2.3.3.1.1. **Polyether Urethane for Disc Bearings**. Furnish polyether urethane discs conforming to the material requirements of the AASHTO LRFD Bridge Design Specifications and AASHTO LRFD Bridge Construction Specifications, and the load and rotation demand indicated in 434.2.3.1

2.3.3.1.2. **Elastomeric Rotational Element for Pot Bearings**. Provide elastomer conforming to the material requirements of the AASHTO LRFD Bridge Design Specifications and AASHTO LRFD Bridge Construction Specifications, and the load and rotation demand indicated in 434.2.3.1 with the exception that usage of virgin natural polyisoprene (natural rubber) is not allowed.

2.3.3.1.3. **PTFE**. For expansion HLMR bearings, furnish PTFE materials that are pure virgin polytetrafluoroethylene fluorocarbon resin, unfilled. The finished materials must exhibit the physical properties shown in Table 1. Provide PTFE that is bonded to the top steel bearing plate of the HLMR assembly in accordance with AASHTO LRFD Bridge Construction Specifications.

2.3.3.2. **Upper Component**.

2.3.3.2.1. **Steel Top Plates**. Provide steel top plates in accordance with the AASHTO LRFD Bridge Design Specifications and AASHTO LRFD Bridge Construction Specifications. Provide an ANSI #500 or better finish on the surface interfacing with the stainless steel sheet for expansion bearings. At the fabricator's option, the steel top plate may serve the function of the sole plate between the supported structure and the HLMR bearing assembly provided it matches geometric bevel requirements, plan dimensions, and minimum thickness for the sole plate depicted on the Design Documents, while maintaining the performance requirements and avoiding damage due to

installation. Otherwise, provide connectivity between the top plate and the sole plate or grouted interface as indicated on the Design Documents. Coordinate any necessary adjustments to the sole plate geometry, connection method, or grouted interface to ensure compatibility with the structural design, prior to ordering any materials. Provide bolted connections for connection to steel trapezoidal box girder superstructures.

2.3.3.2.2. **Stainless Steel**. Provide Type 304 stainless steel sheet in accordance with ASTM A240. The thickness must be at least 1/16 in.

2.3.3.3. **Miscellaneous Components**.

2.3.3.3.1. **Lateral Guides**. Provide guide bars integrated with the steel top plate and interface components of stainless steel facing and PTFE for guided HLMR expansion bearings. Submit alternate interface components to stainless steel and PTFE for review and approval. Provide details indicating guide bar, stainless steel, and PTFE attachment and design to sustain the lateral loads specified on the Design Documents while maintaining unimpeded expansion capability.

2.3.3.3.2. **Piston**. Provide in accordance with the AASHTO LRFD Bridge Design Specifications and AASHTO LRFD Bridge Construction Specifications.

2.3.3.3.3. **Pot**. Provide in accordance with the AASHTO LRFD Bridge Design Specifications and AASHTO LRFD Bridge Construction Specifications.

2.3.3.3.4. **Sealing Rings**. Provide in accordance with the AASHTO LRFD Bridge Design Specifications and AASHTO LRFD Bridge Construction Specifications.

2.3.3.3.5. **Sealants**. Provide in accordance with the AASHTO LRFD Bridge Design Specifications and AASHTO LRFD Bridge Construction Specifications.

2.3.3.4. **Supporting Masonry Plate and Anchor Rods**. Coordinate any necessary adjustments to masonry plate geometry, connection method, or grout interface to ensure compatibility with the structure design before ordering any materials. Provide medium strength, mild steel or better type anchor rods in accordance with Item 449, “Anchor Bolts,” including nuts and washers.

2.3.3.5. **Coatings**. Provide coating materials as required in accordance with Item 445, “Galvanizing,” or DMS-8104, “Paint, Shop Application for Structural Steel.” Submit fabricator-preferred alternative coatings for review and approval.

3. CONSTRUCTION

3.1. **Plain and Laminated Elastomeric Bearings.** Electronically submit shop drawings for the complete assembly before fabrication of laminated elastomeric bearings with or without steel top plates or special components in accordance with the Design Documents and Item 441, “Steel Structures.” Provide a bearing layout with the shop drawings.

Mold together components of a laminated bearing to form an integral unit free of voids or separations in the elastomer or between the elastomer and the steel laminates or plates. Provide wellvulcanized elastomer between the laminates or plates and on the outer surfaces of the bearing that is uniform and integral and resists separation by mechanical means into separate, definite, welldefined elastomeric layers. Evidence of this layered construction, either at the outer surfaces or within the bearing, shall be cause for rejection. Repair of damaged elastomer on sides

of laminated bearings is not allowed for product acceptance. Repair of damaged elastomer on top or bottom surfaces of laminated bearings is allowed when approved.

Cover edges of steel laminates with 1/8 in. to 1/4 in. of elastomer except exposure of the laminates will be permitted at approved laminate restraining devices and around holes entirely enclosed in the finished structure. Position laminates within 1/8 in. of plan location.

Plain bearings may be molded individually, cut from previously molded strips or slabs molded to the full thickness of the finished bearings, or extruded and cut to length. The finish of cut surfaces must be ANSI 250, or smoother. The finished bearings must have no voids or separations detectable either at the bearing surfaces or within the bearing. Plain elastomeric bearings must be well vulcanized, uniform and integral units of such construction that the bearing is incapable of being separated by any mechanical means into separate, definite, welldefined elastomeric layers. Evidence of layered construction either at the outer surfaces or within the bearing shall be cause for rejection.

The permissible variation from the dimensions and configuration shown on the Design Documents for both plain and laminated bearings shall be as listed in AASHTO M 251, Table 2. Flash tolerance, finish, and appearance must meet the requirements of the latest edition of the *Rubber Handbook* published by the Rubber Manufacturers Association, Inc., RMA F3 and T.063 for molded bearings and RMA F2 for extruded bearings.

Perform required welding in accordance with Item 441, “Steel Structures.” Manufacture guide bars, when required, so adjacent top and bottom bar surfaces are parallel to within 1/16 in. in the assembled position. The tolerance for diameter of anchor bolt holes is +1/8 in., −0. The maximum deviation for flatness of steel plates is 1/16 in. in any 24 in.

3.1.1. **Markings**. Mark the bearing type on the surface of each bearing as shown on the Design Documents. The marking must remain legible until placement in the structure. Permanently mark, in addition, laminated bearings with:

- manufacturer’s name or trademark,
- lot number,
- date of manufacture (month-year), and
- direction of slope.

Place this permanent marking on a face which is visible after erection of the bridge.

3.1.2. **Testing and Acceptance**. The sampling and testing of laminated bearing production, after prequalification approval, shall be as follows:

3.1.2.1. **Laminated Bearings**. Subject each laminated bearing to a compression of 2,250 psi. Provide calibrated equipment per ASTM E4 for this compression testing. Each bearing will be acceptable if there is no visible evidence of bond failure or other damage and if the finished bearing meets other pertinent portions of this Item. Samples may be taken if the quality of production becomes questionable.

3.1.3. **Documentation**. Furnish certified laboratory test results on the elastomer properties of each batch or lot of compound for both plain and laminated bearings. Provide copies of certified mill test reports for laminated bearing steel top plates and any required steel special components.

3.1.4. **Storage**. Protect plain and laminated bearingsfrom sunlight until placement in the structure.

3.1.5. **Field Methods**. Provide concrete surfaces for bearing areas under plain and laminated elastomeric bearings in accordance with Item 420.4.9., "Treatment and Finishing of Horizontal Surfaces."

Do not damage the elastomer when welding near bearings.

Damaged bearings shall be subject to rejection and require replacement.

3.2. **Sliding Elastomeric Bearings.** Electronically submit shop drawings for the complete assembly before fabrication of sliding elastomeric bearings in accordance with the Design Documents and Item 441, "Steel Structures." Provide a bearing layout with the shop drawings.

Finish the steel top (sole) plate surface, interfacing with the stainless steel sheet, per Section 434.2.2.2.1., "Steel Top (Sole) Plates." Provide this finished surface flat to a tolerance of 1/32 in. Provide the remaining surface, outside the stainless steel sheet interface, flat to a tolerance of 1/16 in. in any 24 in.

Attach the stainless steel sheet to the steel top (sole) plate by continuous fillet-welding around the edges with an approved welding electrode. Do not extend the weld above the sliding surface. Protect the sliding surface from weld spatter. Polish the stainless steel sheet to a bright mirror finish less than 20 micro-in. rms, and solvent-clean to remove traces of polishing compound after attachment to the steel plate.

Fabricate the laminated elastomeric bearing pads according to Section 434.3.1., "Plain and Laminated Elastomeric Bearings." Vulcanize the laminated elastomeric bearing pad to the PTFE-faced steel plate. Machine the steel plate recessed surface flat to a tolerance of 1/32 in. and within 1/32 in. of required depth. Bond the PTFE material to the steel plate recessed surface with an approved adhesive. Fit the PTFE material into the recessed surface with not more than 1/32-in. gaps around the perimeter.

Perform required welding in accordance with Item 441, "Steel Structures." Manufacture guide bars when required so that adjacent top and bottom bar surfaces are parallel to within 1/16 in. in the assembled position. The tolerance for diameter of anchor bolt holes is +1/8 in., -0 in.

3.2.1. **Markings.** Mark the bearing type on the surface of each sliding elastomeric bearing. The marking must remain legible until placement in the structure. Permanently mark the laminated elastomeric bearing pad with the information specified in 434.3.1.1, "Markings."

3.2.2. **Testing and Acceptance.** Test a minimum of 10% of the sliding elastomeric bearing assemblies to a compressive strength of 2,250 psi. Provide calibrated equipment per ASTM E4 for this compression testing. No tested sliding elastomeric bearing may show visible damage to the PTFE or stainless steel surfaces nor evidence of bond failure between the:

- PTFE-faced steel plate and laminated elastomeric bearing pad,
- steel laminates and elastomer within the laminated elastomeric bearing pad, and
- steel plate and PTFE.

Perform check tests if necessary on the steel, laminated elastomeric bearing pads, or PTFE material to verify the properties required under Section 434.2.2., "Sliding Elastomeric Bearings."

Bearings represented by test specimens passing the requirements of this Item will be approved for use in the structure subject to on-site inspection for visible defects.

3.2.2.1. **Lower Component.** Manufacture 1 additional bearing lower component per project for testing purposes. Notify TxDOT which will sample a bearing lower component at random from the lot, after bearings have been manufactured for a project. Forward selected samples (freight prepaid) to TxDOT or to their contracted testing laboratory when directed. Lower component samples shall be tested to the following:

- Tex-601-J, Part II—Adhesion Test Method 2. Adhesion between the PTFE material and steel plate must meet a minimum 20 lb. per inch.
- Tex-601-J, Part III—Adhesion Test Method 3. Bond failure between the PTFE-faced steel plate and the laminated elastomeric bearing pad must occur as stated in this test method to constitute a passing test result.

3.2.2.2. **Documentation.** Furnish copies of certified mill test reports for the steel top (sole) plate, stainless steel, PTFE-faced steel plate, and any required steel special components. Provide a manufacturer's certification that the PTFE material meets the requirements of this Item. Furnish certified laboratory test results on the elastomer properties of each batch or lot of compound for laminated elastomeric bearing pads.

3.2.3. **Storage.** Store sliding elastomeric bearings horizontally in a dry, sheltered area. Provide moisture and dust-resistant wrapping maintained in good condition until installation. Lift bearings only from the undersides. Protect bearings from damage, dirt, oil, grease, and other foreign substances.

3.2.4. **Field Methods.** Provide concrete surfaces for bearing areas under sliding elastomeric bearings in accordance with Item 420, “Treatment and Finishing of Horizontal Surfaces.”

Refer to the Design Documents for temperature setting corrections for all bridges and bearing alignment relative to a chord for curved bridges. Perform such adjustments if the Design Documents do not address these requirements.

Exercise care in any field-welding required for the installation of a sliding elastomeric bearing to prevent damage to the elastomer, PTFE, or stainless steel surface. Repair damage to protective coating on the bearings and apply the final appearance coat in accordance with Item 446, “Field Cleaning and Painting Steel.”

Damaged bearings shall be subject to rejection and require replacement.

3.3. **HLMR Bearings.** Electronically submit shop drawings for the complete assembly, before fabrication of HLMR bearings, in accordance with the Design Documents. Provide a bearing layout with the shop drawings including geometric placement on substructure. Provide design calculations sealed by a Registered Professional Engineer.

3.3.1. **Markings.** Provide a permanent identification mark indicating each bearing’s position in the structure and a direction arrow oriented in the forward station direction. Ensure the primary identification mark or a second such mark is provided at a visible location on the bearing after superstructure construction.

3.3.2. **Testing and Acceptance.** Coordinate arrangements for sampling and testing with TxDOT. Notify TxDOT before manufacturing all or a significant number of bearings for the Project. Coordinate with TxDOT the number and type of tests that must be observed by a designated TxDOT

representative. Perform testing in accordance with Section 18, “Bearing Devices,” of the current AASHTO LRFD Bridge Construction Specifications. Use prequalification for certain tests only if approved by TxDOT.

Disassemble bearings for visual inspection after testing. Replace or repair any bearings that reveal malfunction such as lift-off, galling between components, excessive deflection, yielding of steel, wrinkling of stainless steel, and flow or bond failure of PTFE. Perform testing to validate performance of replaced or repaired bearings.

3.3.3. **Storage.** Store HLMR bearings horizontally in a dry, sheltered area. Provide moisture and dust-resistant wrapping maintained in good condition until installation. Lift bearings only from the undersides. Protect bearings from damage, dirt, oil, grease, and other foreign substances.

3.3.4. **Field Methods.** Provide concrete surfaces for bearing areas under HLMR bearings in accordance with Section 420.4.9., “Treatment and Finishing of Horizontal Surfaces.”

Do not disassemble bearings. Clean any contaminated sliding surfaces by the fabricator.

Place HLMR bearings on preformed fabric pads as indicated in Section 441.3.11.6., “Bearing and Anchorage Devices.” Refer to the Design Documents for temperature setting corrections for all bridges and bearing alignment relative to a chord for curved bridges. Perform such adjustments if the Design Documents do not address these requirements.

Exercise care in any field-welding required for the installation of an HLMR bearing to prevent damage to the elastomer, disc Element, PTFE, or stainless steel surface. Perform repair of damage to the prime coat on the bearings and apply the final appearance coat in accordance with Item 446, “Cleaning and Painting Steel.”

Damaged bearings shall be subject to rejection and require replacement.

Item 438

25. Cleaning and Sealing Joints

1. DESCRIPTION

Clean and seal joints in new or existing rigid concrete pavements and bridge decks. Resize joints in rigid concrete pavements and approach slabs as shown on the Design Documents.

2. MATERIALS

Use sealants of the class specified on the Design Documents that meet the requirements of DMS-6310, "Joint Sealants and Fillers." Use primers recommended by the manufacturer of the sealant if required.

Provide backer rods that are circular and are 25 percent larger than the joint opening. Use backer rods compatible with the sealant that do not react or bond together.

3. EQUIPMENT

Use equipment that meets sealant manufacturer's recommendations. Use air compressors equipped with appropriate filters for removing oil and water from the air. Provide concrete saws with sufficient capacity to cut full depth of concrete pavement, approach slabs, and pan girder joints.

4. CONSTRUCTION

Submit information from the sealant manufacturer showing recommended equipment and installation procedures before starting Work. All equipment and procedures shall be subject to approval. If the equipment causes damage to dowels, reinforcing steel, concrete, base, sub-base, or subgrade, repair the damage and change the procedure and equipment to prevent further damage.

4.1. **Preparation.** Remove all debris, dirt, dust, saw-cuttings, and other foreign material from joint by an approved method. Collect and dispose of all the removed material.

Remove existing preformed bituminous fiber board material or other spacer material the full depth of the joint along with all other debris in the joint opening. Resize the joint sealant space by sawing to the width and depth shown on the Design Documents to accommodate the type of sealant specified.

Clean debris from the diaphragm windows below the joints on concrete slab and girder bridges.

Abrasive blast clean the vertical faces of joints armored with steel to remove all visible rust, paint, mill scale, and other forms of contamination, leaving a white metal appearance. Clean concrete and other surfaces by method approved and in accordance with the manufacturer's specifications before placing sealant. Air blast the joint after cleaning to remove all dust.

Saw-cut concrete pavement and concrete approach slab full depth to resize joint opening as shown on the Design Documents. Clean all debris out of the joint full depth of concrete pavement.

4.2. **Sealing.** Place the sealant in accordance with the manufacturer's recommended procedures. Apply the primer, when required, at the specified rate and time interval before applying the sealant. Apply the sealant to dry joint surfaces unless otherwise recommended by the sealant manufacturer. Tool any sealant material that is not self-leveling to force the sealant against the joint surfaces.

Place approved support spacers into joints as shown on the Design Documents for concrete pavement. Place a backer rod in the joint opening to prevent the sealant from flowing through the joint and to hold the sealant at its required elevation. Set the top of the sealant and thickness of sealant as shown on the Design Documents. Do not place sealant in an expansion-type joint if surface temperature is below 55°F or above 90°F.

Item 439

26. Bridge Deck Overlays

1. DESCRIPTION

Overlay concrete bridge deck surface with concrete overlay (CO), latex-modified concrete overlay (LMC), or multi-layer polymer overlay (MLPO). Remove and replace deteriorated or delaminated concrete as indicated or directed.

2. MATERIALS

Provide materials conforming to the pertinent requirements of the following Items except as noted below.

- Item 421, "Hydraulic Cement Concrete"
- Item 440, "Reinforcement for Concrete"

2.1. **Latex for LMC.** Provide latex admixture meeting the requirements of DMS-4640, "Chemical Admixtures for Concrete."

Store latex at temperatures between 40°F and 85°F. Do not allow latex to freeze.

2.2. **Grout for CO or LMC.** Provide grout for bonding new concrete to existing concrete consisting of equal parts by weight of hydraulic cement and sand when shown on the Design Documents. Mix with sufficient water to form a stiff slurry, which can be applied with a stiff brush or broom to the existing concrete in a thin, even coating that will not run or puddle in low spots.

2.3. Materials for MLPO:

2.3.1. **Crack Sealant**. Furnish epoxy crack sealant conforming to DMS-6100, "Epoxies and Adhesives," Type IV, and compatible with the multiple layer polymer overlay determined by the manufacturer of the overlay system. Epoxy, methacrylate, or polymer crack sealant not meeting the requirements of DMS-6100, "Epoxies and Adhesives," for Type IV epoxy may be used if part of the manufacturer's overlay system.

2.3.2. **Sand**. Furnish finely graded, oven-dry mason's sand (for broadcast over crack sealant) that is compatible with the multiple layer polymer overlay determined by the manufacturer of the overlay system.

2.3.3. **Aggregate**. Furnish aggregate (for polymer overlay) that conforms to the gradation specified in Table 1. Use an angular-shaped aggregate with a Mohs scale hardness of 6 or greater. Use aggregates that are non-friable, non-polishing, clean, kiln-dried to a maximum moisture content of 0.2% by weight, and free of dirt, clay, asphalt, and other organic materials. All aggregate materials retained in the #8 sieve must have at least 1 mechanically fractured face. Aggregate not meeting the gradation requirements in Table 1 may be accepted if part of an overlay system.

Table 1

Aggregate Gradation Requirements[1]

	Sieve No. 4	Sieve No. 8	Sieve No. 16	Sieve No. 30
% by weight passing sieve	100%	30-75%	0-5%	0-1%

Based on the washed sieve analysis given in Tex-200-F, Part II.

2.3.4. **Resin for Polymer Overlay**. Furnish a polymer resin composed of epoxy, modified epoxy or methyl methacrylate (MMA). The resin (neat) and resulting polymer overlay system (composite consisting of resin and aggregate) must comply with the property requirements specified in Table 2. Furnish a 2-component, 100% solid, 100% reactive resin free of volatile solvents for epoxy-based resin. Formulate the resin to volumetric mixing proportions such as 1 part "A" to 1 part "B" according to the overlay system manufacturer's recommendations. Furnish a flexibilized methyl methacrylate (Component A) and a powdered hardener (Component B) for MMA resin.

Table 2

Requirements for Resin and Polymer Overlay System

Property	Requirement[1]	Test Method
Viscosity (neat)	7–70 poises	Tex-614-J
Gel time (neat)	15 min. minimum	Tex-614-J
Compressive strength at 5 hr. (composite)	1,000 psi minimum	Tex-618-J
Compressive strength at 48 hr. (composite)	3,000 psi minimum	Tex-618-J
Tensile strength at 7 Days (neat)	1,800–5,000 psi	Tex-618-J
Resilience at 48 hr. (neat)	70% minimum	Tex-618-J
Elongation at 7 Days (neat)	30% minimum	Tex-618-J
Bond Strength (neat)	250 psi minimum	Tex-614-J
Shore D hardness (neat)	60-70	ASTM D2240
Absorption at 24 hr. (neat)	1% maximum	ASTM D570
Thermal compatibility (composite)	No delamination of overlay	ASTM C884 with modifications; one cycle is 8 hr. at 60°C followed by16 hr. at -21°C. Determine results after 9 cycles.

1. Values are based on composite specimens or neat samples cured or aged and tested at 24°C (75°F).

3. EQUIPMENT

3.1. Surface Preparation Equipment.

3.1.1. **Concrete Removal and Surface Preparation**. Provide equipment meeting the requirements of Item 483, "Concrete Bridge Deck Surfacing."

3.1.2. **Abrasive Blasting**. Provide equipment capable of removing oil, dirt, slurry, curing compound, laitance, etc., from the surface of the concrete.

3.1.3. **Sawing**. Provide equipment capable of sawing concrete to the specified depth of overlay when required.

3.1.4. **Power-Driven Chipping Tools**. Provide tools not heavier than a nominal 30 lb. class for bulk removal of concrete.

3.1.5. **Chipping Hammers**. Provide chipping hammers not heavier than a nominal 15 lb. class to remove concrete beneath any reinforcing bars.

3.1.6. **Cleaning**. Provide magnetic equipment followed by vacuum equipment to remove spent steel shot. Provide vacuum equipment for final cleaning of prepared surfaces.

3.1.7. **Test Apparatus for MLPO**. Provide all equipment to perform tensile adhesion test prescribed in ASTM C1583.

3.2. **Proportioning and Mixing Equipment**.

3.2.1. **Grout Mixer**. Provide a volumetric continuous or mortar mixer.

3.2.2. **Concrete Overlay**. Follow applicable provisions of Item 421, "Hydraulic Cement Concrete."

3.2.3. **Latex-Modified Concrete Overlay**. Follow the applicable provisions of Item 421, "Hydraulic Cement Concrete." Proportion and mix the latex-modified concrete at the Project site using a suitable approved mixer capable of thoroughly mixing the ingredients to a uniform consistency.

3.2.4. **Multi-Layer Polymer Overlay**. Furnish equipment suitable for mixing and placing the overlay system components recommended by the manufacturer of the overlay system. Furnish paint rollers or notched squeegees to apply crack sealant and resin.

Provide aggregate spreading equipment or methods capable of uniformly applying the aggregate so 100% of the polymer material is covered to excess.

3.3. **Placing and Finishing Equipment**.

3.3.1. **Hand Tools**. Provide sufficient hand tools for placing, consolidating, striking off, and finishing stiff plastic concrete.

3.3.2. **Finishing Equipment for Concrete Overlay**. **Provide an approved surface vibrator moving ahead of the finishing** machine or an approved vibrating screed for overlay consolidation. Provide work bridges or other suitable facilities to perform all finishing operations.

3.3.3. **Finishing Equipment for Latex-Modified Concrete Overlay**. Provide a mechanical strike-off to ensure a uniform thickness of concrete in front of the screed. Design the bottom face of the screed to minimize tearing of the surface of the plastic concrete.

Provide a finishing machine capable of forward and reverse motion under positive control. Make appropriate provisions for raising the screeds to clear the screeded surface for traveling in

reverse. Equip the finishing machine to travel on and screed off of any adjacent completed lane without damaging it. Use approved manual screeds and vibrators to consolidate and finish small or irregular areas inaccessible to the finishing machine. Provide work bridges or other suitable facilities to perform finishing operations and density checks.

4. CONSTRUCTION OF CONCRETE OR LATEX MODIFIED CONCRETE OVERLAYS

4.1. **General**. Provide for approval a detailed Work plan including equipment and manpower before beginning any Work.

Provide sufficient lighting to make quality workmanship and adequate inspection possible during night placements. Lighting must be approved before operations begin.

Provide sufficient labor and equipment for proportioning, mixing, placing, and finishing concrete overlay at a rate of at least 40 ft. of finished overlay per hour. Do not allow traffic other than construction equipment for the overlay on any portion of the prepared bridge deck before the overlay has been placed. Provide side and end forms for supporting the screed and containing the overlay concrete. Provide reinforcement, when required, in accordance with Item 440, “Reinforcement for Concrete,” and the details shown on the Design Documents.

Place concrete only when the air or deck temperature is 40°F or above and the concrete temperature is between 50°F and 85°F. Do not cart concrete batches over the completed overlay until the overlay concrete has attained a 3,000-psi compressive or 425-psi flexural strength. If carts are used, provide timber planking of at least 3/4 in. thickness for the remainder of the curing period. Provide carts equipped with pneumatic tires. Do not interrupt curing operations for the purpose of carting concrete over finished slabs.

Open the structure with the completed overlay to normal construction traffic or to the traveling public in accordance with Section 420.4.1., “Schedule Restrictions.”

4.2. **Surface Preparation**. Do not scarify concrete surfaces with a grooved or tined finish. Prepare these surfaces by abrasive blasting or water-injected abrasive blasting as required to remove dirt, oil, curing compound, laitance, surface mortar, and other material that would inhibit bonding of the overlay, but leave the striations intact.

Scarify the surfaces of slabs to be rehabilitated to the depths shown on the Design Documents in accordance with Item 483, “Concrete Bridge Deck Surfacing.”

Remove and dispose of deteriorated or delaminated areas of concrete as shown on the Design Documents or as determined by the use of a sounding hammer, chain drag, or other acceptable device, and by visual inspection after scarifying as approved.

Remove and repair deteriorated concrete below the indicated depth of scarification in accordance with Item 429, “Concrete Structure Repair”. Use only hydraulic-cement concrete for these repairs. Ensure the repaired surface is flush with the surrounding scarified surfaces. Allow the repair concrete to cure before placing the overlay concrete.

Use a jackhammer not heavier than a nominal 30 lb. class to remove deteriorated concrete in small areas not accessible to the mechanical scarifier, and to spot-remove small areas of

deteriorated concrete to a depth down to the existing top reinforcing steel. This class of jackhammer may also be used for concrete removal between existing reinforcing bars to a greater depth. Use chipping hammers not heavier than a nominal 15 lb. class to remove concrete from beneath any reinforcing bars. Avoid cutting, stretching, or damaging exposed reinforcing steel by direct impact of these power tools. Repair or replace reinforcing steel damaged during the concrete removal process. Operate all jackhammers and chipping hammers at an angle of 45° or less measured from the surface of the slab.

Remove the concrete surrounding the reinforcing bars to a minimum depth of 1/2 in. below the bar to permit the new concrete to bond to the entire periphery of the exposed bar if reinforcing steel is exposed during bridge deck surfacing.

Clean all exposed reinforcing steel, scarified surfaces, and newly exposed concrete surfaces including construction joints against curbs or parapet walls by wet or dry grit blasting before placing the concrete. Blast corroded reinforcing steel to gray metal. Remove and place all blast debris in an approved disposal site. Repair or replace damaged reinforcing steel as required.

Water blast surfaces prepared by abrasive blasting or water-injected abrasive blasting. Continually saturate the prepared surface by soaking or ponding for 24 hr. before placing the overlay. Remove windblown dust, dirt, debris, or standing water from the surface with a high-pressure filtered air blasting just before placing the overlay.

4.3. **Classification and Mix Design**. Provide a mix design in accordance with Item 421, "Hydraulic Cement Concrete." Use a water reducing chemical admixture as necessary to achieve the desired consistency without exceeding the specified water to cementitious material ratio. Provide a mix design with an entrained air content of the fresh concrete of 6% with a tolerance of ±1% when tested in accordance with Tex-414-A or Tex-416-A together with the following requirements:

4.3.1. **Concrete Overlay**. Provide Class CO concrete with a coarse aggregate factor of at least 0.55.

4.3.2. **Latex-Modified Concrete**. Provide Class LMC concrete with a cement content of at least 658 lb. per cubic yard, a latex admixture content of at least 24.5 gal. per cubic yard, and a water content of no more than 18.9 gal. per cubic yard. Provide a mix design using a coarse aggregate volume of 30% to 45% by weight of the total aggregate and a weight ratio of cement-to-sand to coarse aggregate of 1.0:2.8:1.7 based on aggregate in a saturated surface-dry condition. Use a commercially available antifoaming agent with the polymer modifier as necessary to control the air content in the mix.

4.4. **Placing and Finishing Concrete**. Grade the screed rails or headers to ensure the concrete is finished to the required profile. Place the rails or headers outside the area to be overlaid. Provide anchorage of headers or supporting rails for horizontal and vertical stability as necessary. A hold-down device anchored into the concrete will not be permitted unless the concrete is to be subsequently overlaid. Obtain approval for Construction Documents for anchor support of headers or rails before beginning Work.

Provide the overlay thickness specified on the Design Documents. Adjust the screed and screed rail as necessary to provide the approved grade and required thickness. Check the clearance between the screed and existing surface for nonreinforced overlays by attaching a filler block with a thickness of 1/8 in. less than the overlay thickness to the bottom of the screed. Pass the screed over the area to be overlaid with the filler block in place. Correct any areas having

insufficient clearance by adjusting the screed and rail system or by chipping or scarifying. Check screed clearance and reinforcement cover for reinforced overlays.

Construct longitudinal joints at locations shown on the Design Documents. Construct a straight and vertical edge at transverse and longitudinal construction joints. Saw joints before placing the adjacent overlay course.

Install expansion joints in the overlay at the same locations as the expansion joints in the deck.

Moisten the prepared surface to a saturated surface-dry condition just before placing the overlay concrete. Remove standing water from the surface before placing the overlay concrete.

Do not use bonding grout or by this Item. Moisten the prepared surface to a saturated surface-dry condition before placing bonding grout when required. Scrub a thin coating of grout into the prepared surface immediately before placing the concrete. Ensure all surfaces including vertical joints receive a thorough, even coating and that no excess grout collects in pockets. Apply the grout so it does not become dry before it is covered with concrete. Coat areas of the bridge deck where concrete has been removed below the top mat of reinforcing steel with bonding grout if required, and fill them with overlay concrete or Class S concrete as applicable to cover the reinforcing steel. Adequately consolidate and rough float these areas just ahead of the overlay placement. Stop all operations if grout dries out, and remove the grout using high-pressure water blasting.

Place and mechanically strike off the overlay concrete slightly above the final grade. Follow this strike-off by mechanically consolidating and screeding the surface to the final grade. Vibrate all concrete into the corners and angles of the edges. Hand-finish the surface with a float as necessary to produce a tight, uniform surface.

Assure dense, watertight construction joints by properly consolidating the concrete and float-finishing the top surface of the joint flush with the adjacent concrete.

Meet the straightedge and finishing requirements specified in Item 420, “Finish of Bridge Slabs,” for the finishing of the concrete overlay.

4.5. **Curing**. Wet-burlap cure the overlay as soon as possible after the concrete has been textured. Overlay that dries out or cracks before the wet burlap is applied shall be rejected. Keep the burlap continuously wet for 48 hr. for LMC and for 4 Days for CO overlays. Water-cure the overlay in accordance with Section 420.4.10., “Curing Concrete,” for an additional 7 Days. Maintain the surface temperature of the concrete above 40°F for the required curing period. Remove and replace rejected overlay concrete.

5. CONSTRUCTION OF MULTI-LAYER POLYMER OVERLAY

5.1. **Developer Submittals**. Submit the following documentation, and obtain approval before Work commences:

5.1.1. **Product Data**. Submit a list of materials to be used. Provide manufacturer’s product data sheets that include: material specifications for the proposed polymer overlay system; mechanical, physical, and chemical properties; environmental durability; limitations; maintenance instructions; and general recommendations on storage, mixing, application, cleanup, and disposal of materials. Submit a resin mix design which includes the name and type of all ingredients, the mix ratios to be used, and the application rate for each material. Include in the submittal a chart showing the

expected cure times (in minutes) at the corresponding temperatures between 40°F and 100°F (in 10°F increments) for the proposed mix designs.

5.1.2. **Certification of Compliance**. Provide a certificate of compliance from an independent, nationally recognized laboratory stating the materials to be used meet the requirements of this specification. Furnish samples of the materials to be used as required by TxDOT.

5.1.3. **Material Safety Data Sheets**. Provide manufacturer's Material Safety Data Sheets (MSDS) for all materials to be used on site and certification the materials conform to local, State, and federal environmental and worker's safety Laws and regulations.

5.1.4. **Work Plan**. Submit a Work plan for constructing the overlay including at least the following: proposed equipment, materials, and procedures for preparing the surface and placing the overlay; proposed removal and replacement of existing non-compatible deck repair materials; repair procedures for patching deteriorated areas and repairing cracks exposed by surface preparation; and an anticipated schedule for traffic control. The Work plan must meet the approval of the manufacturer of the polymer overlay system. Any Deviations from the application prescribed by this specification must be approved.

5.1.5. **Technical Support Representative**. Submit name and qualifications of overlay system manufacturer's representative who shall be on the jobsite at initiation of Work.

5.2. **Handling of Materials**. Transport and store polymer materials in their original containers in accordance with the manufacturer's recommendations and requirements. Clearly mark containers as "Part A—Contains Resin" or "Part B—Contains Curing Agent," and include the following information on each container: name of product, name and address of manufacturer, mixing proportions and instructions, lot and batch numbers, date manufactured, and quantity contained. Store aggregates in a clean and moisture-free atmosphere that is protected from all potential sources of contamination.

5.3. **Deck Repair**. Repair the deck in accordance with applicable Items before surface preparation and if indicated on the Design Documents. Use only repair materials that are compatible with the crack sealant and overlay systems the system manufacturers' determined. Do not use phosphate-based repair materials unless the overlay system manufacturer determines them to be compatible.

5.4. **Surface Preparation**. Prepare the entire concrete deck surface after all repairs have cured in accordance with the repair material manufacturer's recommendations by removing weak concrete, asphaltic materials, oils, dirt, rubber, curing compound, paint, carbonation, laitance, weak surface mortar, and other potentially detrimental materials that, in the opinion of the overlay system manufacturer's representative, would prevent proper bonding to or curing of the overlay material. Use power-driven hand tools only in areas where mechanical surface preparation equipment cannot reach. Conduct all hand tool operations before using mechanical surface preparation equipment. Select a surface preparation technique such as size and flow of abrasive or water pressure, travel speed, and number of passes that will provide a surface profile equivalent to ICRI Guide No. 03732, Profile 5 or higher.

Use compressed air equipment to clean all dust, debris, and concrete fines from the deck surface and vertical faces of curbs and barrier walls up to a height of 1 in. above the overlay after hand tool and mechanical surface preparation is complete.

Do not allow public traffic onto any portion of the deck that has been prepared and cleaned, or onto any area where all courses have not been placed and allowed to fully cure. Overlay application equipment only is allowed to drive on the prepared deck surface or on any

intermediate course during the overlay application as long as these surfaces are not contaminated or otherwise damaged.

Protect all prepared surfaces from subsequent contamination, and remove any contamination found on the deck or intermediate courses after initial preparation. The deck surfaces shall be inspected for presence of contaminants immediately before placing sealant or any course of the overlay system. Apply the sealant or first course of the overlay within 24 hr. of surface preparation, and place all intermediate courses of the overlay within 7 Days of initial surface preparation.

5.5. **Tensile Adhesion Testing**. Conduct direct pull-off tests in accordance with ASTM C1583 to determine the adequacy of the selected surface preparation (size of shot, flow of shot, forward speed of blast machinery, number of passes, blast pressure, etc.) and cleaning methods. Conduct these tests when the surface temperature is below 80°F. Core through the test overlay to a depth of 0.5 inches into the underlying concrete.

Conduct one tensile adhesion test for each span or 500 sq. yd. whichever is smaller. In addition to representative portion tests, TxDOT may require additional tensile adhesion tests be performed on areas inaccessible to mechanical surface preparation equipment. Developer must remove residual test materials adhering to the deck, make necessary adjustments to the surface preparation methods, and retest all representative portions with failing test results until one passing tensile adhesion test result (from 3 pull-off tests) is obtained for each area tested.

One tensile adhesion test result is the average of 3 pull-off tests conducted over a 1 ft. × 3 ft. test site prepared with at least 1 layer of polymer. Surfaces with tension adhesion test results demonstrating average tensile bond strengths of at least 250 lbs. per square inch are considered acceptable.

5.6. Application of Crack Sealant. Apply the crack sealant in conjunction with the first layer of polymer overlay if the crack sealant and overlay system manufacturers determine it is compatible. Do not place crack sealant on new hydraulic cement concrete that is less than 28 Days old unless the overlay system manufacturer allows it in writing. Allow the deck and all cracks to dry fully before applying crack sealant. Place the crack sealant on repairs only after completion of curing of the repair material and with the concurrence, in writing, of the polymer overlay system manufacturer. Identify moisture in the deck using a plastic sheet left taped in place for a minimum of 2 hr. (per ASTM D4263) or other approved methods.

Mix, place, and cure the crack sealant in accordance with the sealant manufacturer's written recommendations. Do not apply crack sealant if the ambient air temperature is expected to drop below the sealant manufacturer's recommended application temperature range within 8 hr. after application or if the gel time is expected to drop below 10 min.

Broadcast sand at the rate recommended by the sealant manufacturer in such a manner that complete coverage of the treated area is attained while the crack sealant is still tacky. Cure treated area until vacuuming or sweeping can be conducted without tearing or otherwise damaging the treated surface.

Repair any areas in which the treated surface is damaged, contaminated, or does not receive adequate sand embedment before gelling to create a surface compatible with the overlay system as the overlay system manufacturer determines.

5.7. **Application of Polymer Overlay**. Do not place polymer overlay on new hydraulic cement concrete that is less than 28 Days old. Place polymer overlay on repairs only after completion of curing of the repair material and with the concurrence, in writing, of the polymer overlay system manufacturer. Allow the deck to dry fully before applying polymer overlay. Identify moisture in the deck using a plastic sheet left taped in place for at least 2 hr. (per ASTM D4263) or other approved methods. Remove all loose sand or aggregate, and attain approval before placement of each polymer overlay course.

Mix, place, and cure the polymer overlay materials in accordance with the overlay system manufacturer's written recommendations. Do not apply polymer overlay if the ambient air temperature is expected to drop below the overlay system manufacturer's recommended application temperature range within 8 hr. after application or if the gel time is expected to drop below 10 min. MMA overlays may be placed as a slurry, with resin and aggregate pre-mixed, in accordance with the manufacturer's recommendations.

Broadcast aggregate onto the still fluid resin binder until a dry layer of aggregate is present over the entire surface. Immediately broadcast additional aggregate until a dry surface is established if wet spots develop. Accomplish all aggregate broadcasting while binder is still fluid. Cure each course of overlay until vacuuming or sweeping can be conducted without tearing or otherwise damaging the overlay surface. Repair any intermediate courses in which the treated surface is damaged, contaminated, or does not receive adequate aggregate before gelling to create an intermediate surface compatible with the next overlay course as the overlay system manufacturer determines. Repair damaged areas in accordance with the overlay system manufacturer's recommendations if the final polymer overlay surface is damaged or marred.

The nominal finished overlay thickness is at least 3/8 in. measured from the highest point on the deck surface to the peaks of the aggregate. Apply the polymer with aggregates in multiple courses (minimum of two for epoxy systems, and at least one course for slurry applied MMA) as prescribed by the overlay system manufacturer but at rates no less than specified in Table 3. Stagger and overlap longitudinal joints between successive courses so no ridges form.

Table 3

Polymer and Aggregate Application Rates

Course	Polymer (gal./100 sq. ft.)	Aggregate (lb./sq. yd.)
Epoxy 1	Not less than 2.5	> 10
Epoxy 2	Not less than 5.0	> 14
MMA 1	Not less than 4.0	>13

Protect all bridge deck expansion joints from intrusion of polymer overlay materials. Remove overlay over all expansion joints within 12 hr. of application and before opening the overlay surface to traffic. Removal may be accomplished by scoring the overlay before gelling, by saw-cutting after curing, or by other method approved by the overlay system manufacturer.

Obtain approval to open any course to traffic. Obtain approval of cleaning and surface preparation methods for initial courses that were opened to traffic before the final course was applied. Do not allow construction traffic on the final course until it has cured sufficiently to

prevent damage by wheel loads. Minimum curing periods shall be in accordance with the submitted curing time chart.

5.8. **Repair of Defects**. TxDOT will examine the completed Work for defects. Immediately repair or take corrective action for delaminations, raveling, weathering, incomplete aggregate coverage, or other defects found during TxDOT's examination.

Item 440

27. Reinforcement for Concrete

1. DESCRIPTION

Furnish and place reinforcement of the type, size, and details shown on the Design Documents.

2. MATERIALS

2.1. **Approved Mills**. Before furnishing steel, producing mills of reinforcing steel for TxDOT must be pre-approved in accordance with DMS-7320, "Qualification Procedure for Reinforcing Steel Mills," by TxDOT, which maintains a list of approved producing mills. Reinforcing steel obtained from unapproved sources will not be accepted.

Contact TxDOT with the name and location of the producing mill for stainless reinforcing steel, low carbon/chromium reinforcing steel, or dual-coated reinforcing steel at least 4 weeks before ordering any material.

2.2. **Deformed Steel Bar Reinforcement**. Provide deformed reinforcing steel conforming to one of the following:

- ASTM A615, Grades 60, 75, or 80;
- ASTM A996, Type A, Grade 60;
- ASTM A996, Type R, Grade 60, permitted in concrete pavement only (Furnish ASTM A996, Type R bars as straight bars only and do not bend them. Bend tests are not required.); or
- ASTM A706, Grades 60 or 80.

Provide the grade of reinforcing steel shown on the Design Documents. Provide Grade 60 if no grade is shown.

The nominal size, area, and weight of reinforcing steel bars this Item covers are shown in Table 1.

Table 1

Size, Area, and Weight of Reinforcing Steel Bars

Bar Size Number (in.)		Diameter (in.)	Area (sq. in.)	Weight per ft.
3		0.375	0.11	0.376
4		0.500	0.20	0.668
5		0.625	0.31	1.043
6		0.750	0.44	1.502
7		0.875	0.60	2.044
8		1.000	0.79	2.670

Bar Size Number (in.)		Diameter (in.)	Area (sq. in.)	Weight per ft.
9		1.128	1.00	3.400
10		1.270	1.27	4.303
11		1.410	1.56	5.313
14		1.693	2.25	7.650
18		2.257	4.00	13.60

Note—Bar size numbers (in.) are based on the number of eighths of an inch included in the nominal diameter of the bar.

2.3. **Smooth Steel Bar Reinforcement**. Provide smooth bars for concrete pavement with a yield strength of at least 60 ksi and meeting ASTM A615. Provide steel conforming to ASTM A615 or meet the physical requirements of ASTM A36 for smooth bars that are larger than No. 3. Designate smooth bars by size number up to No. 4 and by diameter in inches above No. 4.

2.4. **Spiral Reinforcement**. Provide bars or wire for spiral reinforcement of the grade and minimum size or gauge shown on the Design Documents.

Provide smooth or deformed wire conforming to ASTM A1064. Provide bars conforming to ASTM A615; ASTM A996, Type A; or ASTM A675, Grade 80, meeting dimensional requirements of ASTM A615.

2.5. **Weldable Reinforcing Steel**. Provide reinforcing steel conforming to ASTM A706 or with a maximum carbon equivalent (C.E.) of 0.55% if welding of reinforcing steel is required or desired. Provide a report showing the percentages of Elements necessary to establish C.E. for reinforcing steel that does not meet ASTM A706, in order to be structurally welded. These requirements do not pertain to miscellaneous welds on reinforcing steel as defined in Section 448.4.2.1.1., "Miscellaneous Welding Applications."

Calculate C.E. using the following formula:

$$C.E. = \%C + \frac{\%Mn}{6} + \frac{\%Cu}{40} + \frac{\%Ni}{20} + \frac{\%Cr}{10} - \frac{\%Mo}{50} - \frac{\%V}{10}$$

Do not weld stainless reinforcing steel. Provide stainless reinforcing steel suitable for welding, if required, and submit welding procedures and electrodes for approval.

2.6. **Welded Wire Reinforcement**. Provide welded wire reinforcement (WWR) conforming to ASTM A1064. Observe the relations shown in Table 2 among size number, diameter in inches, and area when ordering wire by size numbers. Precede the size number for deformed wire with "D" and for smooth wire with "W."

Designate WWR as shown in the following example: 6 × 12 – W16 × W8 (indicating 6-in. longitudinal wire spacing and 12-in. transverse wire spacing with smooth No. 16 wire longitudinally and smooth No. 8 wire transversely).

Table 2

Wire Size Number, Diameter, and Area

Size Number (in.)	Diameter (in.)	Area (sq. in.)
31	0.628	0.310
30	0.618	0.300
28	0.597	0.280
26	0.575	0.260
24	0.553	0.240
22	0.529	0.220
20	0.505	0.200
18	0.479	0.180
16	0.451	0.160
14	0.422	0.140
12	0.391	0.120
10	0.357	0.100
8	0.319	0.080
7	0.299	0.070
6	0.276	0.060
5.5	0.265	0.055
5	0.252	0.050
4.5	0.239	0.045
4	0.226	0.040
3.5	0.211	0.035
2.9	0.192	0.035
2.5	0.178	0.025
2	0.160	0.020
1.4	0.134	0.014
1.2	0.124	0.012
0.5	0.080	0.005

Note—Size numbers (in.) are the nominal cross-sectional area of the wire in hundredths of a square inch. Fractional sizes between the sizes listed above are also available and acceptable for use.

2.7. **Epoxy Coating**. Provide epoxy coated reinforcing steel as shown on the Design Documents. Before furnishing epoxy coated reinforcing steel, an epoxy applicator must be pre-approved in accordance with DMS-7330, "Qualification Procedure for Reinforcing Steel Epoxy Coating Applicators." TxDOT maintains a list of approved applicators.

Furnish coated reinforcing steel meeting the requirements in Table 3.

Table 3

Epoxy Coating Requirements for Reinforcing Steel

Material	Specification
Bar	ASTM A775 or A934
Wire or WWR	ASTM A884 Class A or B
Mechanical couplers	As shown on the Design Documents
Hardware	As shown on the Design Documents

Use epoxy coating material and coating repair material that complies with DMS-8130, "Epoxy Powder Coating for Reinforcing Steel." Patch no more than 1/4-in. total length in any foot at the applicator's plant.

Maintain identification of all reinforcing steel throughout the coating and fabrication process and until delivery to the Project site.

Furnish 1 copy of a written certification the coated reinforcing steel meets the requirements of this Item and 1 copy of the manufacturer's control tests.

2.8. **Mechanical Couplers**. Use couplers of the type specified in DMS-4510, "Mechanical Couplers for Reinforcing Steel," Article 4510.5.A, "General Requirements" when mechanical splices in reinforcing steel bars are shown on the Design Documents.

Furnish only couplers produced by a manufacturer pre-qualified in accordance with DMS-4510, "Mechanical Couplers for Reinforcing Steel." Ensure sleeve-wedge type couplers are not used on coated reinforcing. Sample and test couplers for use on individual projects in accordance with DMS-4510, "Mechanical Couplers for Reinforcing Steel." Furnish couplers only at locations shown on the Design Documents.

Furnish couplers for stainless reinforcing steel with the same alloy designation as the reinforcing steel.

2.9. **Fibers.** Supply fibers conforming to DMS-4550 "Fibers for Concrete" at the minimum dosage listed on the Material Producer List maintained by TxDOT when allowed by the Design Documents. Use non-metallic fibers when shown on the Design Documents.

2.10. **Stainless Reinforcing Steel**. Provide deformed steel bars of the types listed in Table 4a and conforming to ASTM A955, Grade 60 or higher when stainless reinforcing steel is required on the Design Documents.

Table 4a

Acceptable Types of Deformed Stainless Steel Bar

• **UNS Designation**	S31653	S31803	S24100	S32304
• **AISI Type**	316LN	2205	XM-28	2304

2.11. **Low Carbon/Chromium Reinforcing Steel**. Provide deformed steel bars conforming to ASTM A1035, Grade 100 when low carbon/chromium reinforcing steel is required on the Design Documents.

2.12. **Dual-Coated Reinforcing Steel**. Provide deformed bars conforming to ASTM A1055, Grade 60 or higher when dual-coated reinforcing steel is required on the Design Documents.

2.13. **Glass Fiber Reinforced Polymer Bars (GFRP).** Provide bars conforming to the AASHTO LRFD *Bridge Design Guide Specifications for GFRP-Reinforced Concrete Bridge Decks and Traffic Railings*, Section 4, "Material Specifications" when GFRP bars are required on the Design Documents. Provide sample certification demonstrating the GFRP bar Supplier has produced bar that meets the Material Specifications two months before fabrication. Furnish certification upon shipment that the GFRP bar supplied meets the Material Specifications.

3. CONSTRUCTION

3.2. **Bending**. Fabricate reinforcing steel bars as prescribed in the CRSI *Manual of Standard Practice* to the shapes and dimensions shown on the Design Documents. Fabricate in the shop if possible. Replace improperly fabricated, damaged, or broken bars. Repair damaged or broken bars embedded in a previous concrete placement.

The inside diameter of bar bends, in terms of the nominal bar diameter (d), must be as shown in Table 5.

Table 5

Minimum Inside Diameter of Bar Bends

Bend	Bar Size Number (in.)		Pin Diameter
Bends of 90° and greater in stirrups, ties, and other secondary bars that enclose another bar in the bend	3, 4, 5		4d
	6, 7, 8		6d
Bends in main bars and in secondary bars not covered above	3 through 8		6d
	9, 10, 11		8d
	14, 18		10d

Note—Bar size numbers (in.) are based on the number of eighths of an inch included in the nominal diameter of the bar.

Bend-test representative specimens as described for smaller bars in the applicable ASTM specification where bending No. 14 or No. 18 Grade 60 bars is required. Make the required 90° bend around a pin with a diameter of 10 times the nominal diameter of the bar.

Bend stainless reinforcing steel in accordance with ASTM A955.

3.3. Tolerances. Fabrication tolerances for bars are shown in Figure 1.

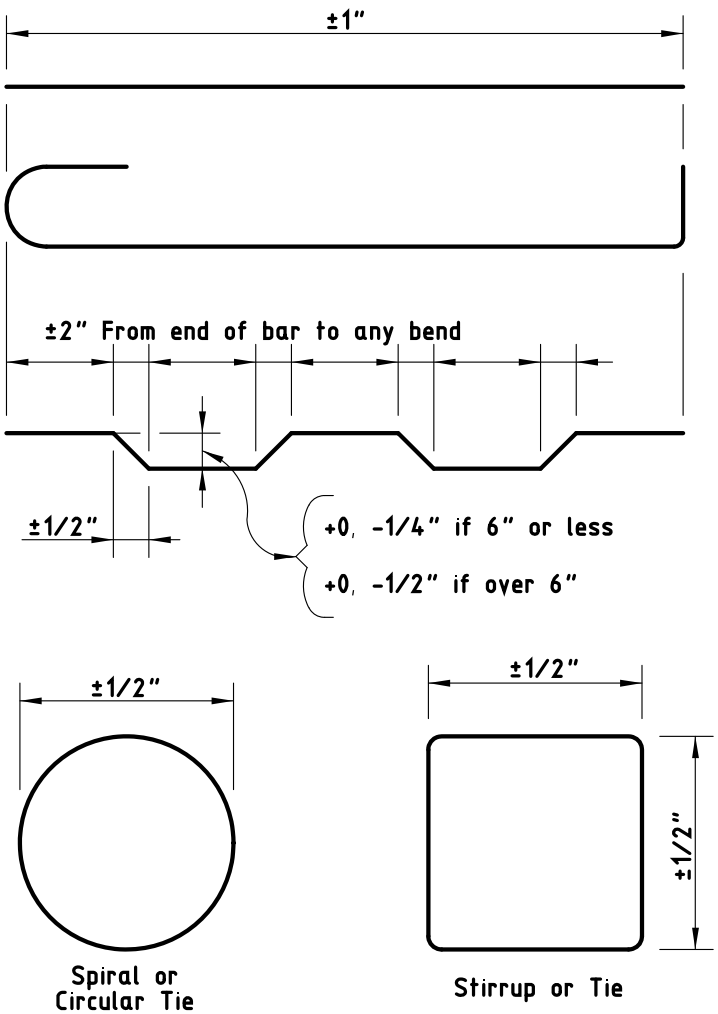

Figure 1

Fabrication tolerances for bars.

3.4. **Storage.** Store reinforcement above the ground on platforms, skids, or other supports, and protect it from damage and deterioration. Ensure reinforcement is free from dirt, paint, grease, oil, and other foreign materials when it is placed in the Work. Use reinforcement free from defects such as cracks and delaminations. Rust, surface seams, surface irregularities, or mill scale will not be cause for rejection if the minimum cross-sectional area of a hand wire-brushed specimen meets the requirements for the size of steel specified.

Do not allow stainless reinforcing steel to be in direct contact with uncoated reinforcing steel, nor with galvanized reinforcing steel. This does not apply to stainless steel wires and ties. Store stainless reinforcing steel separately, off the ground on wooden supports.

3.5. **Splices**. Lap-splice, weld-splice, or mechanically splice bars as shown on the Design Documents. Additional splices not shown on the Design Documents will require approval. Splices not shown on the Design Documents will be permitted in slabs no more than 15 in. in thickness, columns, walls, and parapets.

- Do not splice bars less than 30 ft. in plan length. For bars exceeding 30 ft. in plan length, the distance center-to-center of splices must be at least 30 ft. minus 1 splice length, with no more than 1 individual bar length less than 10 ft.. Make lap splices not shown on the Design Documents, but otherwise permitted, in accordance with Table 6. Maintain the specified concrete cover and spacing at splices, and place the lap-spliced bars in contact, securely tied together.

Table 6

Minimum Lap Requirements for Steel Bar Sizes through No. 11

Bar Size Number (in.)		Uncoated Lap Length	Coated Lap Length
3		1 ft. 4 in.	2 ft. 0 in.
4		1 ft. 9 in.	2 ft. 8 in.
5		2 ft. 2 in.	3 ft. 3 in.
6		2 ft. 7 in.	3 ft. 11 in.
7		3 ft. 5 in.	5 ft. 2 in.
8		4 ft. 6 in.	6 ft. 9 in.
9		5 ft. 8 in.	8 ft. 6 in.
10		7 ft. 3 in.	10 ft. 11 in.
11		8 ft. 11 in.	13 ft. 5 in.

Note—Bar size numbers (in.) are based on the number of eighths of an inch included in the nominal diameter of the bar.

- Do not lap No. 14 or No. 18 bars.
- Lap spiral steel at least 1 turn.
- Splice WWR using a lap length that includes the overlap of at least 2 cross wires plus 2 in. on each sheet or roll. Splices using bars that develop equivalent strength and are lapped in accordance with Table 5 are permitted.
- Lap the existing longitudinal bars with the new bars as shown in Table 6 for box culvert extensions with less than 1 ft. of fill. Lap at least 1 ft. 0 in. for extensions with more than 1 ft. of fill.
- Ensure welded splices conform to the requirements of the Design Documents and of Item 448, “Structural Field Welding.” Field-prepare ends of reinforcing bars if they will be butt-welded. Delivered bars must be long enough to permit weld preparation.
- Install mechanical coupling devices in accordance with the manufacturer’s recommendations at locations shown on the Design Documents. Protect threaded male or female connections, and ensure the threaded connections are clean when making the connection. Do not repair damaged threads.
- Mechanical coupler alternate equivalent strength arrangements, to be accomplished by substituting larger bar sizes or more bars, will be considered if approved in writing before fabrication of the systems.

3.6. **Placing**. Place reinforcement as near as possible to the position shown on the Design Documents. Do not vary bars from plan placement by more than 1/12 of the spacing between bars in the plane of the bar parallel to the nearest surface of concrete. Do not vary bars from plan placement by more than 1/4 in in the plane of the bar perpendicular to the nearest surface of concrete. Provide a minimum 1-in. clear cover of concrete to the nearest surface of bar.

For bridge slabs, the clear cover tolerance for the top mat of reinforcement is −0, +1/2 in.

Locate the reinforcement accurately in the forms, and hold it firmly in place before and during concrete placement by means of bar supports that are adequate in strength and number to prevent displacement and keep the reinforcement at the proper distance from the forms. Provide bar supports in accordance with the CRSI *Manual of Standard Practice*. Use Class 1 supports, approved plastic bar supports, precast mortar, or concrete blocks when supports are in contact with removable or stay-in-place forms. Use Class 3 supports in slab overlays on concrete panels or on existing concrete slabs. Bar supports in contact with soil or subgrade must be approved.

Use Class 1A supports with epoxy coated reinforcing steel. Provide epoxy or plastic coated tie wires and clips for use with epoxy coated reinforcing steel.

Use mortar or concrete with a minimum compressive strength of 5,000 psi for precast bar supports. Provide a suitable tie wire in each block for anchoring to the bar.

Place individual bar supports in rows at 4-ft. maximum spacing in each direction. Place continuous type bar supports at 4-ft. maximum spacing. Use continuous bar supports with permanent metal deck forms.

The exposure of the ends of longitudinals, stirrups, and spacers used to position the reinforcement in concrete pipe and storm drains is not cause for rejection.

Tie reinforcement for bridge slabs and top slabs of direct traffic culverts at all intersections, except tie only alternate intersections where spacing is less than 1 ft. in each direction. Tie the bars at enough intersections to provide a rigid cage of reinforcement for reinforcement cages for other structural members. Fasten mats of WWR securely at the ends and edges.

Clean mortar, mud, dirt, debris, oil, and other foreign material from the reinforcement before concrete placement. Do not place concrete until authorized.

Stop placement until corrective measures are taken if reinforcement is not adequately supported or tied to resist settlement, reinforcement is floating upward, truss bars are overturning, or movement is detected in any direction during concrete placement.

3.7. **Handling, Placing, and Repairing Epoxy Coated Reinforcing Steel**.

3.7.1. **Handling**. Provide systems for handling coated reinforcing steel with padded contact areas. Pad bundling bands or use suitable banding to prevent damage to the coating. Lift bundles of coated reinforcement with a strongback, spreader bar, multiple supports, or a platform bridge. Transport the bundled reinforcement carefully, and store it on protective cribbing. Do not drop or drag the coated reinforcement.

3.7.2. **Placing**. Do not flame-cut coated reinforcement. Saw or shear-cut only when approved. Coat cut ends as specified in Section 440.3.6.3., "Repairing Coating."

Do not weld or mechanically couple coated reinforcing steel except where specifically shown on the Design Documents. Remove the epoxy coating at least 6 in. beyond the weld limits before welding and 2 in. beyond the limits of the coupler before assembly. Clean the steel of oil, grease, moisture, dirt, welding contamination (slag or acid residue), and rust to a near-white finish after welding or coupling. Check the existing epoxy for damage. Remove any damaged or loose epoxy back to sound epoxy coating.

Coat the splice area after cleaning with epoxy repair material to a thickness of 7 to 17 mils after curing. Apply a second application of repair material to the bar and coupler interface to ensure complete sealing of the joint.

3.7.3. **Repairing Coating**. Use material that complies with the requirements of this Item and ASTM D3963 for repairing of the coating. Make repairs in accordance with procedures recommended by the manufacturer of the epoxy coating powder. Apply at least the same coating thickness as required for the original coating for areas to be patched. Repair all visible damage to the coating.

Repair sawed and sheared ends, cuts, breaks, and other damage promptly before additional oxidation occurs. Clean areas to be repaired to ensure they are free from surface contaminants. Make repairs in the shop or field as required.

3.8. **Handling and Placing Stainless Reinforcing Steel**. Handle, cut, and place stainless reinforcing steel bar using tools that are not used on carbon steel. Do not use carbon steel tools, chains, slings, etc. when handling stainless steel. Use only nylon or polypropylene slings. Cut stainless steel reinforcing using shears, saws, abrasive cutoff wheels, or torches. Remove any thermal oxidation using pickling paste. Do not field bend stainless steel reinforcing without approval.

Use 16 gauge fully annealed stainless steel tie wire conforming to the material properties listed in Section 440.2.9., "Stainless Reinforcing Steel." Support all stainless reinforcing steel on solid plastic, stainless steel, or epoxy coated steel chairs. Do not use uncoated carbon steel chairs in contact with stainless reinforcing steel.

3.9. **Bending, Handling, Repairing, and Placing GFRP Bars**. Fabricate, handle, repair, and place GFRP bars in accordance with the AASHTO LRFD Bridge Design Guide Specifications for GFRP-Reinforced Concrete Bridge Decks and Traffic Railings, Section 5, Construction Specifications.

Item 441

28. Steel Structures

1. DESCRIPTION

Fabricate and erect structural steel and other metals used for steel structures or for steel portions of structures.

2. MATERIALS

2.1. **Base Metal**. Use metal that meets Item 442, "Metal for Structures."

2.2. **Approved Electrodes and Flux-Electrode Combinations**. Use only electrodes and flux-electrode combinations found on the list of approved electrodes and flux-electrode combinations TxDOT maintains. To request a product be added to this list or to renew an expired approval, electronically submit a current Certificate of Conformance containing all tests required by the applicable AWS A5 specification according to the applicable welding code (for most construction, AASHTO/AWS D1.5, *Bridge Welding Code*, or AWS D1.1*, Structural Welding Code—Steel*) to TxDOT.

2.3. **High-Strength Bolts**. Use fasteners that meet Item 447, "Structural Bolting." Use galvanized fasteners on field connections of bridge members when ASTM A325 bolts are specified and steel is painted.

2.4. **Paint Systems.** Provide the paint system (surface preparation, primer, intermediate, and appearance coats as required) shown on the Design Documents. Provide System IV if no system is specified.

Standard paint systems for painting new steel include the following:

2.4.1.1. **System III-B**. Provide paint in accordance with DMS-8101, "Structural Steel Paints-Performance." Provide inorganic zinc (IOZ) prime coat, epoxy intermediate coat, and urethane appearance coat for all outer surfaces except those to be in contact with concrete. Provide epoxy zinc prime coat for touchup of IOZ.

2.4.1.2. **System IV**. Provide paint in accordance with DMS-8101, "Structural Steel Paints-Performance." Provide IOZ prime coat and acrylic latex appearance coat for all outer surfaces except those to be in contact with concrete. Provide epoxy zinc prime coat for touchup of IOZ.

2.4.2. **Paint Inside Tub Girders and Closed Boxes**. Provide a white polyamide cured epoxy. Provide IOZ primer meeting the requirements of DMS-8101, "Structural Steel Paints—Performance," to all interior faying surfaces and splice plates.

2.4.3. **Special Protection System**. Provide the type of paint system shown on the Design Documents. Special Protection Systems must have completed NTPEP Structural Steel Coatings (SSC) testing regimen as a complete system, with full data available through NTPEP.

2.4.4. **Galvanizing**. Provide galvanizing, as required, in accordance with Item 445, "Galvanizing."

2.4.5. **Paint over Galvanizing**. Paint over galvanized surfaces, when required, in accordance with Item 445, "Galvanizing."

2.4.6. **Field Painting**. Provide field paint, as required, in accordance with Item 446, "Field Cleaning and Painting Steel."

3. CONSTRUCTION

3.1. **General Requirements**.

3.1.1. **Applicable Codes**. Perform all fabrication of bridge members in accordance with AASHTO/NSBA Steel Bridge Collaboration S2.1. Follow all applicable provisions of the appropriate AWS code (D1.5 or D1.1) except as otherwise noted on the Design Documents or in this Item. Weld sheet steel (thinner than 1/8 in.) in accordance with ANSI/AWS D1.3, Structural Welding Code—Sheet Steel. Requirements of this Item are in addition to the requirements of S2.1 for bridge members. Follow the more stringent requirement in case of a conflict between this Item and S2.1. Perform all bolting in accordance with Item 447, "Structural Bolting."

Fabricate railroad underpass structures in accordance with the latest AREMA *Manual for Railway Engineering* and this Item. In the case of a conflict between this Item and the AREMA manual, the more stringent requirements apply.

3.1.2. **Notice of Fabrication**. Give adequate notice before commencing fabrication Work as specified in Table 1. Include a schedule for all major fabrication processes and dates when inspections are to occur.

Table 1

Notice of Beginning Work

Plant Location	Notice Required
In Texas	7 Days
In the contiguous United States	21 Days
Outside the contiguous United States	60 Days

Perform no Work in the plant before fabrication is authorized. Developer must bear all TxDOT travel costs when changes to their fabrication or inspection schedules are not adequately conveyed to TxDOT.

3.1.3. **Bridge Members**. Primary bridge members include:

- web and flanges of plate, tub, and box girders;
- rolled beams and cover plates;
- floor beam webs and flanges;
- arch ribs and arch tie beams or girders;
- truss members;
- diaphragm members for curved plate girders or beams;
- pier diaphragm members for tub girders;
- splice plates for primary members; and
- any other member designated as "primary" or "main" on the Design Documents.

Secondary bridge members include:

- bracing (diaphragms, cross frames, and lateral bracing); and

- all other miscellaneous bridge items not considered primary bridge members.

3.1.4. **Responsibility**. Developer is responsible for the correctness and completeness of shop drawings and for the fit of shop and field connections.

3.1.5. **Qualification of Plants and Personnel**.

3.1.5.1. **Plants**. Fabrication plants that produce bridge members must be approved in accordance with DMS-7370, "Steel Bridge Member Fabrication Plant Qualification." TxDOT maintains a list of approved bridge member fabrication plants.

Fabrication plants that produce non-bridge steel material listed below must be approved in accordance with DMS-7380, "Steel Non-Bridge Member Fabrication Plant Qualification." TxDOT maintains a list of approved non-bridge fabrication plants for the following items:

- Roadway Illumination Poles
- High Mast Illumination Poles
- High Mast Rings and Support Assemblies
- Overhead Sign Support Structures
- Traffic Signal Poles
- Intelligent Transportation System (ITS) Poles

TxDOT will evaluate non-bridge member fabrication plants for competence of the plant, equipment, organization, experience, knowledge, and personnel to produce acceptable Work.

3.1.5.2. **Personnel**. Provide a QC staff qualified in accordance with the applicable AWS code. Provide an adequate number of qualified QC personnel for each specific production operation. QC must be on-site and independent of production personnel. QC personnel must be proficient in utilizing the applicable Design Documents, specifications, and test methods, and in verifying compliance with the plant QC and production procedures. Welding inspectors must be current AWS Certified Welding Inspectors for bridge member plants, and for non-bridge member plants requiring TxDOT approval per DMS-7380, "Steel Non-Bridge Member Fabrication Plant Qualification." The QC staff must provide inspection of all materials and workmanship before TxDOT's inspection. Provide the TxDOT inspector with adequate personnel and equipment needed to move material for inspection access. QC is solely Developer's responsibility.

3.1.5.3. **Nondestructive Testing (NDT)**. Personnel performing NDT must be qualified in accordance with the applicable AWS code and the employer's Written Practice. Level III personnel who qualify AS Level I and Level II inspectors must be certified by ASNT for which the NDT Level III is qualified. Testing agencies and individual third-party contractors must also successfully complete periodic audits for compliance, performed by TxDOT. In addition, ultrasound technicians must pass a hands-on test TxDOT administers. This will remain current provided they continue to perform testing on TxDOT materials as evidenced by test reports requiring their signature. A technician who fails the hands-on test must wait 6 months before taking the test again. Qualification to perform ultrasonic testing will be revoked when the technician's employment is terminated or when the technician goes 6 months without performing a test on a TxDOT project. The technician must pass a new hands-on test to be re-certified.

3.1.5.4. **Welding Procedure Specifications Qualification Testing**. For bridge member fabrication, laboratories performing welding procedure specifications (WPSs) qualified by testing must be approved in accordance with DMS-7360, "Qualification Procedure for Laboratories Performing Welding

Procedure Qualification Testing." TxDOT maintains a list of laboratories approved to perform WPS qualification testing.

3.1.6. **Drawings**.

3.1.6.1. **Erection Drawings**. Submit erection drawings prepared by a Registered Professional Engineer, including calculations, for approval at least four weeks before erecting any portion of field-spliced (welded or bolted) girders, railroad underpasses, trusses, arches, or other members for which erection drawings are required on the Design Documents. Include drawings and calculations for any temporary structures used to support partially erected members. Erection drawings are not required for rolled I-beam units.

Prepare erection drawings following the procedures outlined in Section 2.2 of the AASHTO/NSBA Steel Bridge Collaboration S10.1. As a minimum, include:

- plan of work area showing structure location relative to supports and all obstructions;
- equipment to be used including allowable load information;
- erection sequence for all pieces;
- member weights and center of gravity location of pieces to be lifted;
- locations of cranes, holding cranes, and temporary supports (falsework), including when to release load from temporary supports and holding cranes;
- details of falsework including specific bracing requirements with maximum allowable design wind speed clearly indicated;
- girder lifting points;
- diaphragm and bracing requirements; and
- minimum connection requirements when more than the standard requirements.

Perform girder erection analyses using UT-Lift and UT-Bridge software available on TxDOT's website or other suitable commercial software. Ensure temporary stresses in members being erected will not cause permanent damage and that stability is maintained throughout the erection operations. Provide actual input files and output results from UT-Lift and UT-Bridge, or graphical and hard copy results from commercial software programs.

Do not proceed if site conditions differing from those depicted on the approved erection drawings could affect temporary support stresses, erected girders, or public safety in any manner. Revise erection drawings and resubmit for approval before proceeding if site conditions could affect these things.

3.1.6.2. **Shop Drawings**. Prepare and electronically submit shop drawings before fabrication for each detail of the general plans requiring the use of structural steel, forgings, wrought iron, or castings as documented in the *Guide to Electronic Shop Drawing Submittal* available on the TxDOT website for other items the standard specifications require.

Indicate joint details on shop drawings for all welds. Provide a title block on each sheet in the lower right corner that includes:

- Project identification data including federal and State Project numbers,
- sheet numbering for the shop drawings,
- name of the structure or stream for bridge structures,
- name of owner or developer,
- name of the fabricator or Supplier, and

- name of Developer.

Provide one set of 11 x 17-in. approved shop drawings in hardcopy to TxDOT for the inspector at the fabrication plant.

3.1.6.2.1. **Bridge Members**. Prepare drawings in accordance with AASHTO/NSBA Steel Bridge Collaboration G1.3, "Shop Detail Drawing Presentation." Print a bill of material on each sheet, including the Charpy V-Notch (CVN) and fracture-critical requirements, if any, for each piece. Indicate fracture-critical areas of members.

3.1.6.2.2. **Non-Bridge Members**. Furnish shop drawings for non-bridge members when required by the Design Documents or pertinent Items.

3.1.7. **Welding Procedure Specifications (WPSs)**. Submit WPSs and test reports in accordance with the applicable AWS code to TxDOT before fabrication begins, and identify which procedures will be used for each joint or joint type. Do not begin fabrication until WPSs are approved.

Post the approved WPSs for the welding being performed on each welding machine, or use another approved method of ensuring the welder has access to the procedure information at all times.

3.1.8. **Documentation**. Before beginning fabrication, provide a completed Material Statement Form 1818 (a.k.a. D-9-USA-1) with supporting documentation (such as mill test reports (MTRs)) that the producing mill issues and qualified personnel verifies. Ensure the documentation legibly reflects all information the applicable ASTM specifications require. Supply documents electronically to TxDOT.

Provide a copy of the shipping or storage invoice, as material is shipped or placed in approved storage, that reflects:

member piece mark identification and calculated weight per piece from the contract drawings,
number of pieces shipped or in storage,
total calculated weight for each invoice per bid item, and
the unique identification number of the shipping or storage invoice.

The inspector's acceptance of material or finished members will not prohibit subsequent rejection if the material or members are found to be damaged or defective. Replace rejected material promptly.

3.1.9. **Material Identification**. Assembly-mark individual pieces and issue cutting instructions to the shop using a system that will maintain identity of the original piece.

Identify structural steel by standard and grade of steel. Also differentiate between material toughness requirements (CVN, fracture-critical) as well as any other special physical requirements. In addition, identify structural steel for primary members by mill identification numbers (heat numbers). Use an approved identification system. Use either paint or low-stress stencils to make identification markings on the metal. Mark the material as soon as it enters the shop and carry the markings on all pieces through final fabrication. Transfer the markings before cutting steel for primary members of bridge structures into smaller pieces. Loss of identification marking on any piece, with no other positive identification, or loss of heat number identification on any primary member piece will render the piece unacceptable for use. Unidentifiable material

may be approved for use after testing to establish acceptability to the satisfaction of TxDOT. Have an approved testing facility perform testing and a Registered Professional Engineer sign and seal the results.

3.2. **Welding**.

3.2.1. **Details**.

3.2.1.1. **Rolled Edges**. Trim plates with rolled edges used for webs by thermal cutting.

3.2.1.2. **Weld Tabs**. Use weld tabs at least 2 in. long for manual and semi-automatic processes, at least 3 in. long for automatic processes, and in all cases at least as long as the thickness of the material being welded. Use longer weld tabs as required for satisfactory Work.

3.2.1.3. **Weld Termination**. Terminate fillet welds approximately 1/4 in. from the end of the attachment except for galvanized structures and flange-to-web welds, for which the fillet weld must run the full length of the attachment.

3.2.1.4. **No-Paint Areas at Field-Welded Connections**. Keep surfaces within 4 in. of groove welds or within 2 in. of fillet welds free from shop paint.

3.2.1.5. **Galvanized Assemblies**. Completely seal all edges of tightly contacting surfaces by welding before galvanizing.

3.2.1.6. **Submerged-Arc Welding (SAW)**. Do not use hand-held semiautomatic SAW for welding bridge members unless altered to provide automatic guidance.

3.2.1.7. **Tubular Stiffeners for Bridge Members**. Weld in accordance with AWS D1.5, using WPSs qualified based on tests on ASTM A709 Gr. 50 steel.

3.2.2. **Shop Splices**.

3.2.2.1. **Shop Splice Locations**. Keep at least 6 in. between shop splices and stiffeners or cross-frames. Obtain approval for shop splices added after shop drawings are approved.

3.2.2.2. **Grinding Splice Welds**. Grind shop groove welds in flange plates smooth and flush with the base metal on all surfaces whether the joined parts are of equal or unequal thickness. Grind so the finished grinding marks run in the direction of stress, and keep the metal below the blue brittle range (below 350°F). Groove welds in web plates, except at locations of intersecting welds, need not be ground except as required to meet AWS welding code requirements.

3.2.3. **Joint Restraint**. Never restrain a joint on both sides when welding.

3.2.4. **Stiffener Installation**.

3.2.4.1. **Flange Tilt**. Members must meet combined tilt and warpage tolerances before the installation of stiffeners. Cut stiffeners to fit acceptable flange tilt and cupping. Minor jacking or hammering that does not permanently deform the material will be permitted.

3.2.4.2. **Stiffeners Near Field Splices**. Tack weld intermediate stiffeners within 12 in. of a welded field splice point in the shop. Weld the stiffeners in the field in accordance with Item 448, “Structural Field Welding,” after the splice is made.

3.2.5. **Nondestructive Testing (NDT)**. Perform magnetic particle testing (MT), radiographic testing (RT), or ultrasonic testing (UT) as specified in D1.5 for bridge structures. Additional welds may be designated for NDT on the Design Documents. Retest repaired groove welds per the applicable AWS code after repairs are made and have cooled to ambient temperature. Complete NDT and repairs before assembly of parts into a member, but after any heat-correction of weld distortion.

3.2.5.1. **Radiographic Testing**. Radiographs must have a density of at least 2.5 and no more than 3.5, as a radiographer confirms. The density in any single radiograph showing a continuous area of constant thickness must not vary in this area by more than 0.5. Use only ASTM System Class I radiographic film as described in ASTM E1815. Use low-stress stencils to make radiograph and location identification marks on the steel.

3.2.5.2. **Ultrasonic Testing**. Have UT equipment calibrated yearly by an authorized representative of the equipment manufacturer or by an approved testing laboratory.

3.2.5.3. **Magnetic Particle Testing**. Use half-wave rectified DC when using the yoke method. Welds may be further evaluated with prod method for detecting centerline cracking.

3.2.6. **Testing of Galvanized Weldments**. If problems develop during galvanizing of welded material, TxDOT may require a test of the compatibility of the combined galvanizing and welding procedures in accordance with this Section and may require modification of one or both of the galvanizing and welding procedures.

Prepare a test specimen with a minimum length of 12 in. using the same base material, having the same joint configuration, and using the welding procedure proposed for production Work if testing is required. Clean and galvanize this test specimen using the same conditions and procedure that will be applied to the production galvanizing.

Examine the test specimen after galvanizing. There must be no evidence of excessive buildup of zinc coating over the weld area. Excessive zinc coating buildup will require modification of the galvanizing procedure.

Remove the zinc from the weld area of the test specimen and visually examine the surface. There must be no evidence of loss of weld metal or any deterioration of the base metal due to the galvanizing or welding procedure. Modify the galvanizing or welding procedure as required if there is evidence of deterioration or loss of weld metal, and run a satisfactory retest on the modified procedures before production Work. Report procedures and results on the galvanized weldment worksheet provided by TxDOT.

3.3. **Bolt Holes**. Detail holes on shop drawings 1/16 in. larger in diameter than the nominal bolt size shown on the Design Documents unless another hole size is shown on the Design Documents.

Thoroughly clean the contact surfaces of connection parts in accordance with Item 447, “Structural Bolting,” before assembling them for hole fabrication. Make holes in primary members full-size (by reaming from a subsize hole, drilling full-size, or punching full-size where permissible) only in assembly.

Ream and drill with twist drills guided by mechanical means. If subpunching holes, punch them at least 3/16 in. smaller than the nominal bolt size. Submit the proposed procedures for approval to accomplish the Work from initial drilling or punching through check assembly when numerically

controlled (N/C) equipment is used. Perform all thermal cutting in accordance with Section 441.3.5.1., "Thermal Cutting."

Slightly conical holes that naturally result from punching operations are acceptable provided they do not exceed the tolerances of S2.1. The tolerance for anchor bolt hole diameter for bridge bearing assemblies is +1/8 in., −0.

3.4. **Dimensional Tolerances**. Meet tolerances of the applicable AWS specifications and S2.1 except as modified in this Section.

3.4.1. **Rolled Sections**. Use ASTM A6 mill tolerances for rolled sections, except D1.5 camber tolerances apply to rolled sections with a specified camber.

3.4.2. **Flange Straightness**. Ensure flanges of completed girders are free of kinks, short bends, and waviness that depart from straightness or the specified camber by more than 1/8 in. in any 10 ft. along the flange. Rolled material must meet this straightness requirement before being laid out or worked. Plates must meet this requirement before assembly into a member. Inspect the surface of the metal for evidence of fracture after straightening a bend or buckle.

3.4.3. **Alignment of Deep Webs in Welded Field Connections**. For girders 48 in. deep or deeper, the webs may be slightly restrained while checking compliance with tolerances of S2.1 for lateral alignment at field-welded connections. In the unrestrained condition, webs 48 in. deep or deeper must meet the tolerances of Table 2. Girders under 48 in. deep must meet the alignment tolerances of S2.1.

Table 2

Web Alignment Tolerances for Deep Girders

Web Depth (in.)	Maximum Web Misalignment (in.)
48	1/16
60	1/8
72	1/4
84	5/16
96	5/16
108	3/8
120	7/16
132	7/16
144	1/2

3.4.4. **Bearings**. Correct bearing areas of shoes, beams, and girders using heat, external pressure, or both. Grind or mill only if the actual thickness of the member is not reduced by more than 1/16 in. below the required thickness.

3.4.4.1. **I-Beams, Plate Girders, and Tub Girders**. The plane of the bearing area of beams and girders must be perpendicular to the vertical axis of the member within 1/16 in. in any 24 in.

3.4.4.2. **Closed Box Girders**. Meet these tolerances:

- The plane of the bearing areas of the box girder is perpendicular to the vertical axis of the girder within 1/16 in. across any horizontal dimension of the bearing.
- The planes of the beam supports on the box girder are true to the vertical axis of the supported beams or girders to 1/16 in. in any 24 in.

In the shop, verify the plane of all bearing areas with the box placed on its bearings to field grade, using an approved process for verification.

3.4.4.3. **Shoes**. Meet these tolerances:

- The top bolster has the center 75% of the long dimension (transverse to the girder) true to 1/32 in., with the remainder true to 1/16 in., and is true to 1/32 in. across its entire width in the short dimension (longitudinal to the girder).
- The bottom bolster is true to 1/16 in. across its diagonals.
- For a pin and rocker type expansion shoe, the axis of rotation coincides with the central axis of the pin.
- When the shoe is completely assembled, as the top bolster travels through its full anticipated range, no point in the top bolster plane changes elevation by more than 1/16 in. and the top bolster does not change inclination by more than 1 degree, for the full possible travel.

3.4.4.4. **Beam supports**. Fabricate beam support planes true to the box girder bearing to 1/16 in. in the short direction and true to the vertical axis of the nesting girders to 1/16 in.

3.4.5. **End Connection Angles**. For floor beams and girders with end connection angles, the tolerance for the length back to back of connection angles is ±1/32 in. Do not reduce the finished thickness of the angles below that shown on the shop drawings if end connections are faced.

3.5. **Other Fabrication Processes**.

3.5.1. **Thermal Cutting**. Use a mechanical guide to obtain a true profile. Hand-cut only where approved. Hand-cutting of radii for beam copes, weld access holes, and width transitions is permitted if acceptable profile and finish are produced by grinding. Provide a surface finish on thermal-cut surfaces, including holes, in accordance with D1.5 requirements for base metal preparation. Obtain approval before using other cutting processes.

3.5.2. **Oxygen-Gouging**. Do not oxygen-gouge quenched and tempered (Q&T), normalized, or thermo-mechanically controlled processed (TMCP) steel.

3.5.3. **Annealing and Normalizing**. Complete all annealing or normalizing (as defined in ASTM A941) before finished machining, boring, and straightening. Maintain the temperature uniformly throughout the furnace during heating and cooling so the range of temperatures at all points on the member is no more than 100°F.

3.5.4. **Machining**. Machine the surfaces of expansion bearings so the travel direction of the tool is in the direction of expansion.

3.5.5. **Camber**. Complete cambering in accordance with S2.1 before any heat-curving.

3.5.6. **Heat Curving**. Heat-curve in accordance with S2.1. The methods in the AASHTO bridge construction specifications are recommended. Attach cover plates to rolled beams before heat-curving only if

the total thickness of one flange and cover plate is less than 2-1/2 in. and the radius of curvature is greater than 1,000 ft. Attach cover plates for other rolled beams only after heat-curving is completed. Locate and attach connection plates, diaphragm stiffeners, and bearing stiffeners after curving, unless girder shrinkage is accounted for.

3.6. **Nonconformance Reports (NCRs).** Submit an NCR for approval when the requirements of this Item are not met. Submit NCRs in accordance with TxDOT's NCR guidelines document. Have readily available access to the services of a Registered Professional Engineer experienced in steel structures design and fabrication. This Registered Professional Engineer may be responsible for reviewing potentially structurally deficient members in accordance with the NCR guidelines document. Receive TxDOT approval before beginning repairs. Perform all repair Work in strict compliance with the approved NCR and repair procedure.

3.7. **Shop Assembly**.

3.7.1. **General Shop Assembly**. Shop-assemble field connections of primary members of trusses, arches, continuous beam spans, bents, towers (each face), plate girders, field connections of floor beams and stringers (including for railroad structures), field-bolted diaphragms for curved plate girders and railroad underpasses, and rigid frames. Field-bolted cross-frames and rolled-section diaphragms do not require shop assembly. Complete fabrication, welding (except for shear studs), and field splice preparation before members are removed from shop assembly. Obtain approval for any deviation from this procedure. Developer is responsible for accurate geometry.

Use a method and details of preassembly consistent with the erection procedure shown on the erection Construction Documents and camber diagrams. The sequence of assembly may start from any location in the structure and proceed in one or both directions. An approved method of sequential geometry control is required unless the full length of the structure is assembled.

Verify by shop assembly the fit of all bolted and welded field connections between bent cap girders and plate girders or between plate girders and floor beams.

Do not measure horizontal curvature and vertical camber for final acceptance until all welding and heating operations are completed and the steel has cooled to a uniform temperature. Check horizontal curvature and vertical camber in a no-load condition.

3.7.2. **Bolted Field Connections**. Each shop assembly, including camber, alignment, accuracy of holes, and fit of milled joints, must be approved before the assembly is dismantled.

Assemble with milled ends of compression members in full bearing. Assemble non-bearing connections to the specified gap. Ream all subsize holes to the specified size while the connections are assembled, or drill full size while the connections are assembled. Adding or increasing the thickness of shims or fill plates in bearing connections requires approval. Use drift pins and snug-tight bolts during the drilling process to ensure all planes of the connection (webs and flanges) can be assembled simultaneously. Do not use tack welds to secure plates while drilling.

Secure parts not completely bolted in the shop with temporary bolts to prevent damage in shipment and handling. Never use tack welds in place of temporary bolts.

Match-mark connecting parts in field connections using low-stress stencils in accordance with the diagram in the erection drawings.

3.7.3. **Welded Field Connections**. Mill or grind bevels for groove welds. Do not cut into the web when cutting the flange bevel adjacent to the web. End preparation, backing, and tolerances for girder splices must be in accordance with Item 448, "Structural Field Welding." Details for all other field-welds must conform to the applicable AWS code.

In the shop, prepare ends of beams or girders to be field-welded taking into account their relative positions in the finished structure due to grade, camber, and curvature. Completely shop-assemble and check each splice. Match-mark the splice while it is assembled with low-stress stencils in accordance with the diagram in the erection drawings.

3.8. **Finish and Painting**.

3.8.1. **Shop Painting**. Perform shop painting as required in DMS-8104, "Paint, Shop Application for Structural Steel." Grind corners on new steel items to be painted (except for the coatings on box and tub girder interiors) that are sharp or form essentially 90° angles to an approximately 1/16 in. flat surface before blast cleaning. (A corner is the intersection of two plane faces.) This requirement does not apply to punched or drilled holes. Do not omit shop paint to preserve original markings.

Ensure painted faying surfaces meet the required slip and creep coefficients for bolted connections as outlined in DMS-8104, "Paint, Shop Application for Structural Steel."

Use a Class A slip (minimum slip coefficient of 0.33) if no slip coefficient or corresponding surface condition is specified Perform all required testing.

Surface preparation and painting the interiors of Tub Girders and Closed Boxes is in accordance with DMS-8104, "Paint, Shop Application for Structural Steel."

3.8.2. **Not Used**.

3.8.3. **Machined Surfaces**. Clean and coat machine-finished surfaces that are in sliding contact, particularly pins and pinholes, with a non-drying, water-repellent grease-type material containing rust-inhibitive compounds. Ensure the coating material contains no ingredients that might damage the steel. Protect machined surfaces from abrasive blasting.

3.9. **Handling and Storage of Materials**. Prevent damage when storing or handling girders or other materials. Remove or repair material damaged by handling devices or improper storage by acceptable means in accordance with ASTM A6 and the applicable AWS code.

Place stored materials on skids or acceptable dunnage above the ground. Keep materials clean. Shore girders and beams to keep them upright and free of standing water. Place support skids close enough to prevent excessive deflection in long members such as columns. Do not stack completed girders or beams at the jobsite.

Protect structural steel from salt water or other corrosive environments during storage and transit.

3.10. **Marking and Shipping**. Mark all structural members in accordance with the erection drawings. If a surface is painted, make the marks over the paint. Do not use impact-applied stencils to mark painted surfaces.

Mark the weight directly on all members weighing more than 3 tons.

Keep material clean and free from injury during loading, transportation, unloading, and storage. Pack bolts of each length and diameter, and loose nuts or washers of each size, separately and ship them in boxes, crates, kegs, or barrels. Plainly mark a list and description of the contents on the outside of each package.

3.11. **Field Erection**. Do not lift and place any steel member, including girders and diaphragms, over an open highway or other open travel way. Do not allow traffic to travel under erected members until sufficiently stable as shown on approved erection drawings.

3.11.1. **Pre-Erection Conference**. Schedule and attend a pre-erection conference at least 7 Days before commencing steel erection operations. Do not install falsework or perform any erection operations before the meeting.

3.11.2. **Methods and Equipment**. Do not tack-weld parts instead of using erection bolts. Do not tack-weld parts to hold them in place for bolting. Provide falsework, tools, machinery, and appliances, including drift pins and erection bolts. Provide enough drift pins, 1/32 in. larger than the connection bolts, to fill at least 1/4 of the bolt holes for primary connections. Use erection bolts of the same diameter as the connection bolts.

Securely tie, brace, or shore steel beams or girders immediately after erection as shown on the erection drawings. Maintain bracing or shoring until the diaphragms are in place and as specified in the erection drawings. Protect railroad, roadway, and marine traffic underneath previously erected girders or beams from falling objects associated with other construction activities.

Only welders certified or working directly under the supervision of a foreman certified in accordance with Item 448, “Structural Field Welding,” may handle torches when applying heat to permanent structural steel members.

3.11.3. **Falsework**. Construct falsework in accordance with the erection plan. Construct foundations for shore towers as shown on erection drawings. Do not use timber mats with deteriorated timbers or soil to construct shore tower foundations. Obtain approval of completed falsework before opening roadway to traffic or starting girder erection activities. Ensure falsework is protected from potential vehicle impact. Inspect and maintain falsework daily. Use screw jacks or other approved methods to control vertical adjustment of falsework in order to minimize the use of shims.

3.11.4. **Handling and Assembly**. Accurately assemble all parts as shown on the Design Documents and the approved shop drawings. Verify match-marks. Handle parts carefully to prevent bending or other damage. Do not hammer if doing so damages or distorts members. Do not weld any member for transportation or erection.

3.11.4.1. **Welded Connections**. Weld flange splices to 50% of their thickness and meet the minimum erection bracing and support requirements before releasing the erection cranes, as shown on the Design Documents and on the approved erection Construction Documents. Field-weld in accordance with Item 448, “Structural Field Welding.”

3.11.4.2. **Bolted Connections**. Before releasing the erection cranes:

- install 50% of the bolts in the top and bottom flanges and the web with all nuts finger-tight,
- meet the minimum erection bracing and support requirements shown on the Design Documents and on the approved erection Construction Documents, and
- install top lateral bracing across the connection for tub girders, and fully tension the bolts connecting the bracing to the top flanges.

Install high-strength bolts, including erection bolts, in accordance with Item 447, "Structural Bolting." Clean bearing and faying surfaces for bolted connections in accordance with Item 447, "Structural Bolting." Clean the areas of the outside ply under washers, nuts, and bolt heads before bolt installation. Ensure the required faying surface condition is present at the time of bolting.

3.11.5. **Misfits**. Correct minor misfits. Ream no more than 10% of the holes in a plate connection (flange or web), and ensure no single hole is more than 1/8 in. larger than the nominal bolt diameter. Submit proposed correction methods for members with defects that exceed these limits or prevent the proper assembly of parts. Straighten structural members in accordance with S2.1. Make all corrections in the presence of TxDOT. Do not remove and reweld gusset plates without approval.

3.11.6. **Bearing and Anchorage Devices**. Place all bearing devices such as elastomeric pads, castings, bearing plates, or shoes on properly finished bearing areas with full and even bearing on the concrete. Place metallic bearing devices on 1/4 in.-thick preformed fabric pads manufactured in accordance with DMS-6160, "Water Stops, Nylon-Reinforced Neoprene Sheet, and Elastomeric Pads," to the dimensions shown on the Design Documents. Provide holes in the pad that are no more than 1/4 in. larger than the bolt diameter.

Build the concrete bearing area up to the correct elevation once it has been placed below grade using mortar that meets Item 420, "Concrete Substructures," and provide adequate curing. Use only mortar for build-ups between 1/8 in. and 3/8 in. thick. Use galvanized steel shims or other approved shim materials in conjunction with mortar if the bearing area must be raised more than 3/8 in.

Provide at least 75% contact of flange to shoe with no separation greater than 1/32 in. for beams and girders. Make corrections using heat or pressure in accordance with S2.1, or with galvanized shims. Correct small irregularities by grinding.

Provide at least 85% contact between the rocker plate and the base plate. Adjust the location of slotted holes in expansion bearings for the prevailing temperature. Adjust the nuts on the anchor bolts at the expansion ends of spans to permit free movement of the span. Provide lock nuts or burr the threads.

Remove all foreign matter from sliding or machine-finished surfaces before placing them in the structure.

Restore distorted bearing pads or expansion bearings to an equivalent 70°F position after completion of all welded or bolted splices, using an approved method of relieving the load on the bearing devices.

3.11.7. **Erecting Forms**. Do not erect forms until all welding or bolting is complete and the unit is positioned and properly set on the bearings.

3.11.8. **Field Finish**. Paint in accordance with Item 446, "Field Cleaning and Painting Steel." Feather out touched-up areas over several feet. Do not use acids to remove stains or scales.

Item 442

29. Metal for Structures

1. DESCRIPTION

Provide structural steel, high-strength bolts, forgings, steel castings, iron castings, wrought iron, steel pipe and tubing, aluminum castings and tubing, or other metals used in structures, except reinforcing steel and metal culvert pipe.

2. MATERIALS

Furnish mill test reports (MTRs), supplemental test documentation, and certifications required by this and other pertinent Items.

2.1. Structural Steel.

2.1.1. **Bridge Structures**. Provide the grade of ASTM A709 steel shown on the Design Documents. Grade 50S may be substituted for Grade 50. Use Zone 1 if no AASHTO temperature zone is shown on the Design Documents.

2.1.2. **Non-Bridge Structures**.

2.1.2.1. **Steel Classifications**. Provide the types and grades of steel listed in this Section.

2.1.2.1.1. **Carbon Steel**. Meet ASTM A36.

2.1.2.1.2. **Low-Alloy Steel**. Meet the requirements of one of the following standards:

- ASTM A529 Grade 50;
- ASTM A572 Grade 50 or 55;
- ASTM A588;
- ASTM A709 Grade 50, or 50S; or
- ASTM A992.

Specify ASTM A6 supplemental requirement S18, “Maximum Tensile Strength,” for material used for sign, signal, and luminaire supports.

2.1.2.2. **Impact Testing**. Tension members and components of the following structure types, if more than 1/2 in. thick. Other members designated on the Design Documents must meet the Charpy V-notch (CVN) requirements of Table 1:

- base plates for roadway illumination assemblies, traffic signal pole assemblies, high mast illumination poles, camera poles, and overhead sign supports;
- pole mounting plates, arm mounting plates, and clamp-on plates for traffic signal pole assemblies;
- arm stiffeners, pole gussets, and stiffeners for traffic signal pole long mast arm assemblies (50 ft. to 65 ft.);
- pole shafts, ground sleeves, and handhole frames for high mast illumination poles;

- W-columns, tower pipes, multiple-sided shafts, tower pipe and multiple-sided shaft connection plates, chord angles, chord splice plates or angles, and truss bearing angles for truss type overhead sign supports; and
- pipe posts, pipe arms, post and arm flange plates, and handhole frames for monotube overhead sign supports.

Table 1

CVN Requirements for Non-Bridge Steel

Material	Thickness	Minimum CVN Toughness
ASTM A36, A53, A242, A500, A501, A709 Gr. 36, any other steel with minimum specified yield point below 40 ksi	up to 4"	15 ft.-lb. at 70°F
ASTM A572[1], A588[1], A633[1], any other steel with minimum specified yield point between 40 and 65 ksi, inclusive	up to 2"	15 ft.-lb. at 70°F
	over 2" to 4", mechanically fastened	15 ft.-lb. at 70°F
	over 2" to 4", welded	20 ft.-lb. at 70°F
Any steel with minimum specified yield point over 65 ksi and under 90 ksi[2]	up to 2-1/2"	20 ft.-lb. at 50°F
	over 2-1/2" to 4", mechanically fastened	20 ft.-lb. at 50°F
	over 2-1/2" to 4", welded	25 t.-lb. at 50°F

1. Reduce the testing temperature by 15°F for each 10-ksi increment or fraction thereof above 65 ksi if the yield point of the material given on the MTR exceeds 65 ksi.

2. Reduce the testing temperature by 15°F for each 10-ksi increment or fraction thereof above 85 ksi if the yield point of the material given on the MTR exceeds 85 ksi.

Use the (H) frequency of testing for material with minimum specified yield point up to 50 ksi. Use the (P) frequency of testing for material with minimum specified yield point over 50 ksi. Ensure steel is sampled and tested in accordance with ASTM A673.

2.1.3. **Other Components**.

2.1.3.1. **Miscellaneous Bridge Components**. Provide steel that meets ASTM A36, A709 Grade 36, or A500 Grade B for members such as steel bearing components not bid under other Items, steel diaphragms for use with concrete bridges, and armor and finger joints.

2.1.3.2. **Shear Connectors and Anchors**. Provide cold-drawn bars for stud shear connectors, slab anchors, and anchors on armor and finger joints that meet the requirements of ASTM A108, Grade 1010, 1015, 1018, or 1020, either semi-killed or killed, and have the tensile properties given in Table 2 after drawing or finishing. Determine tensile properties in accordance with ASTM A370.

Table 2

Minimum Tensile Properties for Bar Stock

Tensile strength	60 ksi
Yield strength	50 ksi
Elongation	20% (2")
Reduction of area	50%

Provide certification from the manufacturer that the studs or anchors as delivered have the required material properties.

2.1.3.3. **Fasteners**. Provide high-strength bolts that meet ASTM A325 or A490 as shown on the Design Documents. TxDOT may sample high-strength bolts, nuts, and washers for structural connections in accordance with Tex-719-I.

Follow the requirements of Item 447, "Structural Bolting," for tests, test reports, and supplemental requirements for high-strength bolts, nuts, and washers.

Use bolts that meet ASTM A307 and nuts that meet ASTM A563 when ASTM A325 or A490 bolts are not shown on the Design Documents.

2.1.3.4. **Slip-resistant Deck Plates**. Furnish steel for deck plates that meets ASTM A786 and one of A242, A588, or A709 Gr. 50. State the type and trade name of material to be used on the shop drawings.

2.1.3.5. **Rail Posts**. Provide material for rail posts that meets ASTM A36 or ASTM A709 Grade 36.

2.2. **Steel Forgings**. Provide steel forgings for pins, rollers, trunnions, or other forged parts that meet ASTM A668, Class C, D, F, or G, as shown on the Design Documents. For pins 4 in. or smaller in diameter for non-railroad structures, material that meets ASTM A108, Grades 1016 to 1030, with a minimum yield strength of 36 ksi, may be used instead.

2.3. **Steel Castings**. Provide steel castings that meet ASTM A27, Grade 70-36.

2.4. **Iron Castings**. Provide iron castings that are true to pattern in form and dimensions; free from pouring faults, sponginess, cracks, blow holes, and other defects in positions affecting their strength and value for the service intended; and meet the standards shown in Table 3.

Table 3

Standards for Iron Castings

Casting Material	ASTM Standard	Grade or Class
Gray iron	A48	35B
Malleable iron	A47	32510
Ductile iron	A536	70-50-05

2.5. **Steel Tubing**. Provide steel tubing that meets ASTM A500, Grade B. Tubing that meets API Standard 5L, Grade X52 may be used if produced by a mill listed in the standard API specifications as authorized to produce pipe with the API monogram. Hydrostatic tests are not required for API 5L steel, and instead of an MTR, the manufacturer may furnish a certificate for each lot or shipment certifying the tubing meets the requirements of this Section.

2.6. **Pipe Rail**. "Pipe" includes special extruded and bent shapes. Provide pipe that is rolled, extruded, or cold-pressed from a round pipe or flat plate, and of the section shown on the Design Documents.

Ensure the design of the cold press and dies results in a pipe of uniform section-free from die marks. Cut the pipe to the lengths required once it has been formed to the required section. Make the end cuts and notches at the angles to the axis of the pipe required to produce vertical end faces and plumb posts when required by the Design Documents. Provide a neat and workmanlike finish when cutting and notching pipe.

2.7. Aluminum. Provide aluminum materials that meet the standards shown in Table 4.

Table 4

Aluminum Standards

Material	ASTM Standard	Alloy-Temper
Castings	B108	A444.0-T4
Extrusions	B221	6061-T6
Sheet or plate	B209	6061-T6

When testing is required, cut test specimens from castings from the lower 14 in. of the tension flange, but not at the junction of the rib or base. Flatten the curved surfaces before machining. Provide standard test specimens in conformance with ASTM E8.

3. CONSTRUCTION

3.1. **Fabrication, Erection, and Painting**. Fabricate, weld, and erect structural metal in accordance with Item 441, "Steel Structures," Item 447, "Structural Bolting," Item 448, "Structural Field Welding," and the applicable AWS welding code. Paint in accordance with Item 446, "Cleaning and Painting Steel." Aluminum or galvanized steel members do not require painting.

3.2. **Galvanizing**. Galvanize fabricated steel items, steel castings, bolts, nuts, screws, washers, and other miscellaneous hardware in accordance with Item 445, "Galvanizing." Galvanizing is not required.

Item 445

30. Galvanizing

1. DESCRIPTION

Galvanize or repair galvanizing on metal items.

2. MATERIALS

Provide galvanized metal items that meet the standards in Table 1.

Table 1

Galvanizing Standards

Item	Standard
Fabricated items, rolled, pressed, or forged steel shapes, plates, pipes, tubular items, and bars	ASTM A123
Steel or iron castings	ASTM A153, Class A
Bolts, nuts, screws, washers, and other miscellaneous hardware	ASTM A153, Class C or D or ASTM B695, Class 50
Miscellaneous fasteners	ASTM B633, Class Fe/Zn 8
Rail Elements for metal beam guard fence or bridge railing	AASHTO M 180
Permanent metal deck forms, supporting angles, and incidental items	ASTM A653, Coating Designation G165

3. CONSTRUCTION

3.1. **General**. Provide for proper filling, venting, and draining during cleaning and galvanizing if fabricated members or assemblies are required to be hot-dip galvanized. Provide drain holes or slots as required, except where prohibited by the Design Documents. Provide a surface finish on the thermal-cut surfaces when thermal cutting drain holes or slots in accordance with AWS D1.1 requirements for base metal preparation. Drain to the small end of the section if assembling tapered members using slip-joint splices. Ensure cleaning and galvanizing does not produce hydrogen embrittlement.

Remove weld flux, weld slag, and any other weld residue or impurities before galvanizing. Before galvanizing material 1/4 in. or greater in thickness:

- remove all sharp burrs and
- chamfer to approximately 1/16 in. all edges.

3.2. **Painting Galvanized Materials**. Provide a paint system if painting is specified on galvanized materials in accordance with DMS-8102 “Paint Systems for Galvanized Steel.” Follow all manufacturer instructions for surface preparation and application including the following:

3.2.1. **Surface Preparation**. Do not water-quench or chromate-quench galvanized surfaces to be painted. Prepare the surface in accordance with ASTM D6386. Apply coating within 12 hr. of cleaning. Re-clean the surface if more than 12 hr. elapse before initial painting.

3.2.2. **Coating Application**. Ensure the coating is smooth, even, continuous, and free of drips, runs, sags, holidays, wrinkles, or other coating defects. Ensure the coating has a uniform appearance within all portions of the painted piece and all related pieces and components of a project. Ensure all repairs are smooth, even, and visually match the remainder of the coated piece by use of feathering and other appropriate techniques to avoid sharp transitions.

3.3. **Galvanizing Weldments**. If problems develop during galvanizing of welded material, TxDOT may require a compatibility test of the combined galvanizing and welding procedures in accordance with Section 441.3.2.6., "Testing of Galvanized Weldments," and may require modification of one or both of the galvanizing and welding procedures.

3.4. **Workmanship**.

3.4.1. **Coverage**. Bare spots no more than 1/8 in. across are acceptable unless numerous. Repair larger bare spots in accordance with Section 445.3.5., "Repairs." Local runs or drips of zinc coating are acceptable unless they interfere with the intended use of the product. Carefully remove plainly visible excessive zinc accumulations.

3.4.2. **Adhesion**. Tap the coated area with a small hammer to test coating adhesion. The coating is acceptable if it is not brittle and does not scale or flake.

3.4.3. **Appearance**. Fabricate poles in accordance with this Item and the Design Documents. Alternate designs are not permitted.

3.4.3.1. **White Rust**. A white powdery residue indicates moisture. Remove heavy layers of white rust that have caused the coating to pit. Light coatings may remain. Remove white rust from articles that will be in direct contact with soil.

3.4.3.2. **Red Rust**. Red rust on galvanized items indicates uncoated areas. See Section 445.3.4.1., "Coverage," for acceptance criteria.

3.4.3.3. **Alligator Cracking or Spider Webbing**. The composition of the base metal may cause dark lines resembling alligator skin. (See Section 445.3.4.2., "Adhesion," to determine whether the coating is acceptable.)

3.4.3.4. **Dull Gray Coating**. The composition of the base metal can cause a dull gray color. (See Section 445.3.4.2., "Adhesion," to determine whether the coating is acceptable).

3.4.4. **Coating Thickness**. Galvanize to the thickness specified. Use Tex-728-I to determine coating thickness.

3.5. **Repairs**. Use zinc-based solders, sprayed zinc, or zinc-rich paints for repairs in accordance with this Section.

3.5.1. **Materials**.

3.5.1.1. **Zinc-Based Solders**. Solders used in rod form or as powders:

zinc-tin-lead alloys with liquidus temperatures in the range of 446°F to 500°F or
zinc-cadmium alloys with liquidus temperatures in the range of 518°F to 527°F.

3.5.1.2. **Sprayed Zinc (Metallizing)**. Zinc coating applied by spraying with droplets of molten metal using wire, ribbon, or powder processes.

3.5.1.3. **Organic Zinc-Rich Paints**. Zinc-rich paints based on organic binders that meet the requirements of DMS-8103, "Galvanizing Repair Paint." TxDOT maintains a list of approved repair paints for galvanized coatings.

3.5.2. **Repair Processes**.

3.5.2.1. **Zinc-Based Solders**. Remove moisture, oil, grease, dirt, corrosion products, and welding slag or flux from surfaces to be repaired. Clean surface to white metal by wire-brushing, light grinding, or mild blasting extending into the surrounding undamaged galvanized coating. Preheat cleaned areas to at least 600°F, but not more than 750°F. Wire-brush while heating and evenly distribute a layer of zinc solder. Flush the repaired area with water or wipe with a damp cloth to remove flux residue when repair is completed.

3.5.2.2. **Sprayed Zinc (Metallizing)**. Remove oil, grease, corrosion products, and any welding slag or flux from surfaces to be repaired, and ensure the surfaces are dry. Clean surface to white metal by wire-brushing, light grinding, or mild blasting extending into the surrounding undamaged galvanized coating. Apply coating by metal-spraying pistols fed with either zinc wire, ribbon, or powder. Provide a coating that is uniform and free of lumps, coarse areas, or loose particles.

3.5.2.3. **Organic Zinc-Rich Paints**. Remove oil, grease, corrosion products, and welding slag or flux from surfaces to be repaired, and ensure the surfaces are clean and dry. Clean surface to near-white metal by wire- brushing, light grinding, or mild blasting extending into the surrounding undamaged coating to provide a smooth repair. Spray or brush-apply the paint to the prepared area in accordance with the paint manufacturer's instructions to attain the required dry-film thickness. Provide multiple passes when using spray application.

3.6. **Repair Coating Thickness**. Measure thickness in the repaired area using Tex-728-I after completing repair and cooling or curing. The minimum thickness required is the same as that required for the specified galvanizing. However, if the repair uses zinc-rich paints, the minimum coating thickness is 50% higher than the specified galvanizing thickness but not greater than 4.0 mils.

Item 446

31. Field Cleaning and Painting Steel

1. DESCRIPTION

Prepare steel surfaces for painting and apply paint.

2. MATERIALS

Provide the paint system (surface preparation, primer, intermediate, and appearance coats as required) shown on the Design Documents. Provide System II if no system specified. Provide a concrete gray appearance coat (Federal Standard 595C, color 35630). Use differing colors for each individual coat with enough contrast between colors to distinguish the various steps in the painting process, including differing the color of the stripe coat relative to the primer and intermediate coat.

2.1. **Paint Systems**. Standard paint systems for painting new and existing steel include the following:

2.1.1. **System I-A (Overcoating, One Coat)**. Provide an overcoating system in accordance with DMS-8105, "Paint, One-coat Overcoat," and the manufacturer's specifications.

2.1.2. **System I-B (Overcoating, High Corrosion Environment)**. Provide paint in accordance with DMS-8101, "Structural Steel Paints—Performance." Provide a penetrating sealer, intermediate prime coat on bare steel areas, and an appearance coat in accordance with manufacturer's specifications.

2.1.3. **System II**. Provide #810 Prime Coat meeting DMS-8100, "Structural Steel Paints—Formula," and acrylic latex appearance coat meeting DMS-8101, "Structural Steel Paints—Performance."

2.1.4. **System III-A**. Provide paint in accordance with DMS-8101, "Structural Steel Paints—Performance." Provide organic zinc (OZ) prime coat, epoxy intermediate stripe coat, epoxy intermediate full coat and urethane appearance coat.

2.1.5. **System III-B**. Provide paint in accordance with DMS-8101, "Structural Steel Paints—Performance." Provide inorganic zinc (IOZ) prime coat, epoxy intermediate, and urethane appearance coat. Provide epoxy zinc prime coat, as recommended by the IOZ manufacturer, for touchup of IOZ.

2.1.6. **System IV**. Provide paint in accordance with DMS-8101, "Structural Steel Paints—Performance." Provide IOZ prime coat and acrylic latex appearance coat. Provide epoxy zinc prime coat, as recommended by the IOZ manufacturer, for touchup of IOZ.

2.2. **Paint Inside Tub Girders and Closed Boxes**. In accordance with Item 441, "Steel Structures."

2.3. **Paint over Galvanizing**. In accordance with Item 445, "Galvanizing."

2.4. **Special Protection System**. Provide the type of paint system shown on the Design Documents. Special Protection System paints must have completed NTPEP Structural Steel Coatings (SSC) testing regimen as a complete system, with full data available through NTPEP.

3. EQUIPMENT

Ensure spray equipment:

- has adequate capacity and sufficient gauges, filters, agitators, regulators, and moisture separators to ensure delivery of clean dry air at the proper pressure and volume;
- is adequate for the type of paint being used;
- has spray heads that provide a smooth, uniform coat of paint;
- will remove moisture from air stream in contact with the paint; and
- has no dried coatings, solvents, or other foreign matter on surfaces that paint is likely to contact.

Maintain all equipment and accessories in good working order.

Keep paint pots no more than 20 ft. above or below the level of spray application of paint during painting operations. Do not allow fluid hoses to sag more than 10 ft. below the level of the bottom of the paint pot or actual spraying operations, whichever is the lowest point. Keep hoses serviceable with no cracks or deterioration. Equip paint pots (or other containers from which the paint is dispensed) with agitators that operate whenever paint is in the pot.

3.1. **Airless Spray Equipment**. Use regulator and air or fluid pressure gauges. Use fluid hoses with at least 1/4-in. inside diameter (I.D.) and a maximum length of 75 ft.

3.2. **Conventional Spray Equipment**. Use independent fluid pressure and atomization pressure regulators and gauges. Use fluid and air hoses with at least 1/2-in. I.D. and a maximum length of 75 ft.

4. CONSTRUCTION

4.1. **Qualification.** Certification of the cleaning and painting contractor, Subcontractor, or fabricator is required as follows:

Submit documentation verifying SSPC QP 1 certification for Work requiring the removal or application of coatings. Additionally, submit documentation verifying SSPC QP 2-Cat A certification when Work requires removal of coatings containing Hazardous Materials. Maintain certifications throughout the Project. No Work may be performed without current and active certifications.

TxDOT may waive certification requirements, when stated on the Design Documents, for the purpose of qualification in the SSPC QP program if the SSPC has accepted the project as a qualification project as part of the process for obtaining SSPC QP 1 or QP 2-Cat A certification. Submit SSPC QP applications and proof of acceptance before beginning Work or provide SSPC QP 7 certification when required on the Design Documents.

Inform TxDOT within 1 Business Day of all scheduled or unannounced inspections or audits by SSPC, OSHA, EPA, TCEQ, or other agencies or organizations. Furnish a complete copy of all inspection and audit reports and any SSPC DAC actions within 7 Days of receipt.

4.2. **Responsibility for Hazards**. Some paints and cleaning products are harmful to health. Handle all paints and cleaning products in accordance with the information on the manufacturer's safety data sheet (MSDS) and all applicable federal and State regulations. Comply with all worker and public safety

protection measures including 29 CFR 1926.62 when cleaning requires removing paint containing Hazardous Materials such as lead or chromium. Monitor permissible exposure limits (PEL) in accordance with OSHA requirements.

4.3. **Access**. Provide safe access to all parts of the Work for proper inspection. Do not place rigging, scaffolds, etc., in contact with previously painted surfaces until the previously applied coating has fully cured. Protect previously painted and cured surfaces with an approved padding to minimize damage when rigging, scaffolds, etc., will be placed on or hung from those surfaces. Avoid and minimize coating damage to the extent possible. Repair all coating damaged as a result of rigging or scaffolding.

Remove tree limbs, bushes, grass, and other items that will interfere with the cleaning and painting operations. Remove vertical clearance signs, and erect and maintain temporary ground-mounted signs matching the content and letter size on the existing sign. Re-attach permanent clearance signs.

4.4. **Steel to be Painted**. Clean and paint all structural steel,. Structural steel includes all main members, bearing apparatus, diaphragms, floor beams, rivets, bolts, lateral bracing, etc., where applicable. Paint the rolling faces of rockers and base plates, all surfaces of bearing plates, and all surfaces of iron or steel castings, whether or not the surfaces are milled unless exempted in this Item. Perform the initial cleaning and application of required prime and intermediate coatings on new steel before shipment of the steel to the jobsite unless otherwise provided in the Contract.

4.5. **Special Protection System**. Apply paint as shown on the Design Documents.

4.6. **Cleaning and Painting New Steel**. Clean and prime new steel in accordance with Item 441, “Steel Structures,” before erection or installation of repair pieces. Clean and paint unpainted areas of newly erected steel, including bolts, nuts, washers, and areas where the shop-applied paint has been damaged or fails to meet specification requirements, in accordance with the method required under the paint system specified and Section 446.4.7.3.1., “General Preparation.” Water blast exposed surfaces of all newly erected steel. Provide Tool Cleaning surface preparation to all repair areas. Prepare all unpainted areas with Abrasive Blast Cleaning. Repair primer coat and apply remaining coats after erection and maintenance Work is complete. Prevent paint and overspray from coming in contact with passing traffic, private and public property, and areas of the bridge not designated to be painted.

4.7. **Cleaning and Painting Existing Steel**.

4.7.1. **Hold Points**. No Work may proceed beyond the listed hold point until receiving provisional approval. Provide the following hold points at a minimum:

- at containment completion,
- following any surface preparation,
- immediately before each coating application,
- after coating application,
- after each coat has cured, and
- after preparation of areas for repair.

4.7.2. **Containment**. Submit a plan that details the procedures and type and size of equipment proposed to keep public property, private property, and the environment from being adversely affected by the cleaning and painting operations. Approval of the plan is required before cleaning and painting

operations begin. Containment is not required for painting newly erected, shop primed steel other than to comply with Section 446.4.6., "Cleaning and Painting New Steel."

Submit a containment plan and engineering analysis, when required on the Design Documents, showing the loads, including wind loads, added to the existing structure by the containment system and waste materials. Verify the forces and stresses induced in the members from these loads do not result in overstress of the members. Have a Registered Professional Engineer sign, seal, and date the submittal.

Provide containment during all cleaning and painting operations of existing steel structures. Obtain approval of the constructed containment system before beginning cleaning and painting.

Construct and maintain a structure meeting the following minimum requirements:

- SSPC Guide 6, Class 1A, Level 1 Emissions;
- ability to withstand winds up to 30 mph;
- enclosure of all sides of area with air-impenetrable walls;
- illumination meeting SSPC Guide 12;
- rigid, watertight floor formed from minimum 20 gauge steel;
- overlapping seams and entryways; and
- exhaust air filtration system capable of creating negative pressure inside the enclosure causing the sides of the containment to have a concave appearance and demonstrating minimum 100 ft. per minute cross draft air flow and minimum 50 ft. per minute downdraft air flow in all areas within the containment.

In place of a full containment structure, a modified containment system may be proposed for the following situations:

- when using abrasive blasting equipment equipped with negative pressure able to contain all blast refuse. Demonstrate, for approval, the equipment's ability to contain all blast refuse.
- when using hand tools for spot cleaning only, provide a system that will contain all removed paint, rust, and other debris. Place an airtight membrane below the member being cleaned to collect all falling debris.
- when using power hand tools for spot cleaning only that are equipped with high-efficiency particulate air (HEPA) filter vacuums that will capture all removed paint, rust, and other debris. Otherwise, provide an airtight membrane below the member being cleaned to collect all falling debris.

Provide a system meeting SSPC Guide 6, Class 1W, when using water blasting.

Store, characterize, and dispose of all recovered debris in accordance with 30 TAC 335, "Industrial Solid Waste and Municipal Hazardous Waste." Alternatively, Universal Waste rules may be utilized. Discharge liquids in accordance with the TCEQ Texas Pollution Discharge Elimination Program (30 TAC 305, "Effluent Guidelines and Standards for TPDES Permits") and Texas Surface Water Quality Standards (30 TAC 307). Alternatively, liquids may be captured, stored, and characterized for disposal at an authorized facility in accordance with 30 TAC 315, "Pretreatment Regulation for Existing and New Sources of Pollution," or 30 TAC 335, "Industrial Solid Waste and Municipal Hazardous Waste."

Use a skimmer when cleaning and painting over bodies of water. Remove any blast or paint material the skimmer collects the day the release occurs. Correct the containment problem that allowed the release before continuing Work.

Ensure air is clear of dust and remove all blast refuse from the floor and cleaned members before the inspector enters the containment to inspect the cleaned surfaces. Remove all blast refuse from the containment before ending Work for the day.

4.7.3. **Preparation of Surfaces**. Prepare surfaces before applying paint.

4.7.3.1. **General Preparation**. Clean far enough into any shop-applied paint to ensure removal of all contaminants. Feather edges of sound paint around cleaned areas.

Ensure all surfaces to be painted are completely free of oil, grease, moisture, dirt, sand, overspray, welding contamination (slag or acid residue); loose or flaking mill scale, rust, or paint; weld spatter; and any other conditions that will prevent the paint from forming a continuous, uniform, tightly adhering film. Remove all hackles, splinters weld spatter, sharp edges, fins, slag, or other irregularities which may interfere with proper paint adhesion to the steel. Remove all steel splinters (hackles) raised or evident during cleaning. Reblast areas from which hackles are removed when abrasive blast cleaning is required.

Remove grease-like contaminants with clean petroleum solvents or other approved methods before other cleaning operations. Contain solvents and removed material as approved. Dispose of properly or reuse solvents as approved. This requirement applies to all coats.

Blast all flame-cut edges, when abrasive blast cleaning is required, to produce a visible anchor pattern over the entire flame-cut surface.

Completely remove the protective coating on machined surfaces and pins.

Do not damage adjacent materials such as concrete during surface preparation or painting.

Feather all sound, tightly adhered coating edges surrounding cleaned or repaired areas a minimum of 1 in. and ensure a smooth, blended transition.

Round all corners and edges to a 1/16-in. radius. Reblast as needed. Remove pack rust to depth of at least 0.5 in.

4.7.3.2. **Classes of Cleaning**. The requirements of Section 446.4.7.3.1., “General Preparation,” apply whether or not a class of cleaning is specified. Use an approved abrasive for abrasive blasting as shown on the Design Documents. Do not use steel shot. Use an abrasive recycling system with an approved recyclable abrasive when abrasive blast cleaning is used to remove existing paint containing lead or chromium. Abrasive will be considered recyclable if it is separated from the dust and paint debris before being reused. All abrasives must meet SSPC-AB1, AB2, or AB3 as appropriate.

All paint systems require water blasting to remove contaminants before any other surface preparation. Both System I-A and I-B require tool cleaning for defective areas of disbonded coating or rust. All other paint systems require abrasive blast cleaning.

4.7.3.2.1. **Abrasive Blast Cleaning**. Meet the surface preparation requirements of SSPC-SP 10. Ensure a minimum profile of 1.5 mils. Do not add depth to existing profile when the surface profile exceeds 4.0 mils. Measure surface profile in accordance with ASTM D4417, Method C, "Standard Test Methods for Field Measurement of Surface Profile of Blast Cleaned Steel." Containment mounting points and other repair areas under 1 sq. ft. may be tool-cleaned to SSPC SP-11 with at least a minimum 2 mil profile.

4.7.3.2.2. **Tool Cleaning**. Meet the requirements of SSPC-SP2 or SP3. Probe the perimeter of peeled areas of paint with a putty knife to ensure remaining paint is tightly adhered.

4.7.3.2.3. **Water Blasting**. Meet the requirements of SSPC-SP WJ-4. Tight mill scale and tightly adhered rust and paint are permitted. Probe the perimeter of peeled areas of paint with a putty knife to ensure remaining paint is tightly adhered.

4.7.3.3. **Tape Test**. Perform the tape test, as necessary to determine cleanliness, on any surface before painting as follows:

- Press a strip of filament tape onto the surface by rubbing with moderate thumb pressure four times, leaving approximately 2 in. of one end of the tape free from the surface.
- Grasp the free end and remove the tape from the surface with a sharp pull.

The surface shall be considered to be contaminated and not adequately cleaned if visible particles cling to the tape.

4.7.4. **Painting**.

4.7.4.1. **Paint Condition**. Thoroughly mix and strain paints to be applied. Mix by mechanical methods. Provide continuous mechanical agitation during painting operations to prevent settling. Ensure the paint is a completely homogeneous mixture free of lumps, skins, and agglomerates and contains all pigments, vehicle solids, and thinners required in the original formulation. Keep paint containers tightly covered and protected from weather when not in use.

4.7.4.2. **Thinning**. Adjust paint to the correct application consistency by using suitable thinners or by using properly applied heat up to 150°F. Using heat to thin paints may decrease their useful pot life.

4.7.4.3. **Paint System Requirements**. Ensure all coatings in the paint system, including shop-applied coats, are from the same manufacturer.

4.7.4.4. **Stripe Coat**. All stripe coat, when specified, shall be unthinned and worked in by brush to achieve a contiguous film over all edges, corners, bolts, nuts, threads, rivets, and weld seams, extending at least 1 in. onto adjacent steel.

4.7.4.5. **Paint Systems**.

4.7.4.5.1. **System I-A (Overcoating, One Coat)**. Apply at least 4.0 mils dry film thickness (DFT) maintenance overcoat to all surfaces to be painted.

4.7.4.5.2. **System I-B (Overcoating, High Corrosion Environment)**.

4.7.4.5.2.1. **Penetrating Sealer**. Apply 0.5–1.0 mil DFT of penetrating sealer to all surfaces to be painted.

4.7.4.5.2.2. **Prime Coat**. Apply 4.0–8.0 mils DFT of primer to areas that have received tool cleaning and to other areas where there is no existing primer.

4.7.4.5.2.3. **Appearance Coat**. Apply 2.0–6.0 mils DFT of appearance coat.

4.7.4.5.3. **System II**.

4.7.4.5.3.1. **Prime Coat**. Apply 3.5–10.0 mils DFT of primer in at least 2 coats.

4.7.4.5.3.2. **Appearance Coat**. Apply 2.0–5.0 mils DFT of appearance coat.

4.7.4.5.4. **System III-A**.

4.7.4.5.4.1. **Prime Coat**. Apply at least 3.5 mils DFT of epoxy zinc primer.

4.7.4.5.4.2. **Stripe Coat**. Apply stripe coat of epoxy intermediate coating.

4.7.4.5.4.3. **Intermediate Coat**. Apply at least 2.0 mils DFT of epoxy intermediate coating.

4.7.4.5.4.4. **Appearance Coat**. Apply at least 2.0 mils DFT of appearance coating.

4.7.4.5.5. **System III-B**.

4.7.4.5.5.1. **Prime Coat**. Apply at least 3.0 mils DFT of inorganic zinc primer to new steel in accordance with Item 441, "Steel Structures." Spot-clean all damaged and unpainted areas in accordance with Section 446.4.6., "Cleaning and Painting New Steel." Apply at least 3.0 mils DFT of epoxy zinc primer to the spot cleaned areas.

4.7.4.5.5.2. **Stripe Coat**. Apply stripe coat of epoxy intermediate coating.

4.7.4.5.5.3. **Intermediate Coat**. Apply at least 2.0 mils DFT of epoxy intermediate coating.

4.7.4.5.5.4. **Appearance Coat**. Apply at least 2.0 mils DFT of appearance coat.

4.7.4.5.6. **System IV**.

4.7.4.5.6.1. **Prime Coat**. Apply at least 3.0 mils DFT of inorganic zinc primer to new steel in accordance with Item 441, "Steel Structures." Spot-clean all damaged and unpainted areas in accordance with Section 446.4.6., "Cleaning and Painting New Steel." Apply at least 3.0 mils DFT of epoxy zinc primer to the spot cleaned areas.

4.7.4.5.6.2. **Appearance Coat**. Apply at least 2.0 mils DFT of appearance coat.

4.7.4.5.7. **Special Protection System**. Apply paint as shown on the Design Documents.

4.7.4.6. **Temperature**. Do not apply #810 Prime Coat when the steel or air temperature is below 50°F or when the steel or air temperature is expected to drop below 50°F within 2 hr. after application. Follow product data sheets for temperature requirements for all other paints.

4.7.4.7. **Application**. Clean steel surfaces or surfaces of previously applied coats of paint immediately before painting by blowing with clean compressed air, brushing, or both to remove traces of dust or other foreign particles. Wash the surfaces of previously applied coatings either with clean, fresh water or with a mild detergent and water mixture followed by a complete and thorough rinse with clean, fresh water when directed.

Do not apply paint to any surface with discernible moisture. Do not apply paint to any surface when steel is within 5°F of the dewpoint. Do not apply any paint when impending weather conditions might result in injury to fresh paint.

Provide environmental controls such as dehumidification, heaters, or additional containment measures as needed to control and maintain favorable atmospheric conditions in all areas of the containment. Provide environmental controls.

Apply each coat of paint to clean, dry, firm surfaces complying with all specification requirements. Ensure surfaces to be painted are free of all forms of contamination. Ensure each coat fully cures to form a smooth, continuous, tightly adhering film of uniform thickness and appearance, free of sags, runs, pinholes, holidays, overspray, or other defects before applying the next coat. Apply all coats by spray, except brush-applied stripe coats.

Repair all runs, sags, and other defects in each coat of paint before application of subsequent coats.

Measure the dry film thickness of coatings in accordance with Tex-728-I.

Discontinue painting if there is an objectionable amount of dust in the atmosphere, or take necessary precautions to prevent dust and dirt from coming in contact with freshly painted surfaces or with surfaces before the paint is applied.

Provide full coverage of the steel with the concrete surface when painting steel that is in contact with concrete. Do not extend the paint more than 4 in. onto the concrete surfaces. Ensure when painting is complete the only visible paint on concrete surfaces is the finish coat. Remove excessive or objectionable paint on concrete surfaces in an approved manner.

Cure the primer, when System II is specified, in accordance with Table 1 before applying appearance coat.

Table 1

System II Primer Cure Times

Temperature	Days Cure, Min.
77°F and above	2
65–77°F	3
55–65°F	4
40–55°F	5

Clean coated surfaces by an approved method that does not damage the paint to remove all dirt, grease, concrete, overspray, and any other substance that may impair adhesion before the application of the next coat.

Provide an even and uniform appearance throughout the painted portion of the structure.

4.7.4.8. **Workmanship**. Perform all painting with skilled painters who can adjust equipment and application techniques as dictated by the type of paint, weather conditions, environment, and size and shape of the surface being painted. Painters who, in the opinion of TxDOT, do not adjust equipment to apply coatings in a uniform, full wet coat free of runs, sags, holidays, and overspray will not be considered skilled painters.

Apply sprayed coatings essentially 90° to the surface and between 10 and 18 in. from the surface as necessary to apply a full wet coat of paint free of overspray, runs, sags, and holidays. Any spray painter who does not consistently spray in this manner or extends the spraying stroke so paint is applied to the surface at an angle of less than 80° will not be allowed to spray paint. Brush application for touchup is acceptable as long as the paint is mixed in the appropriate proportions by weight and is agitated continuously during the painting operation.

4.7.5. **Handling and Shipping**. Pad the blocks, chains, slings, braces, clamps, etc., used for handling, moving, storing, and shipping painted members so the paint will not be damaged.

4.8. **Paint Improperly Applied.** To uncover evidence of improperly applied paint, TxDOT may at any time during construction explore underneath the surface of any paint coats already applied. Repair these areas of investigation.

Repair or completely remove and replace all paint that has been applied improperly, has been applied to improperly cleaned surfaces, fails to dry and harden properly, fails to adhere tightly to underlying metal or other paint film, or does not have a normal, workmanlike appearance in conformance with this Item. When the final field coat does not have a uniform color and appearance throughout the structure, correct it by the use of whatever additional coats or other corrective measures are required. Remove freshly applied paint that has not yet set with the use of suitable solvents. Remove dried paint films with blast cleaning, scraping, or flame torches, as approved.

4.9. **Storage and Disposal.** Collect all waste generated by cleaning and painting operations as necessary to prevent release into the environment. At a minimum, collect all waste before leaving the jobsite each day. Handle and store the waste as if it was hazardous or Universal Waste until classification is made. Follow the requirements of 30 TAC 335 for on-site handling of the waste. Store waste collected in containers that comply with 49 CFR 178. Seal containers containing waste each day before leaving the jobsite.

Test a representative sample of waste using EPA Test Method 1311, “Toxicity Characteristic Leaching Procedure” (TCLP), to determine existing metal and organic content. Handle and dispose of non-hazardous waste as a “Special Waste” as defined in 30 TAC 330.2. Provide documentation showing disposal of the waste was done in a suitable landfill holding permits to handle this type of material. Dispose of hazardous waste in compliance with applicable waste rules and regulations. Transport hazardous waste using a permitted transporter and dispose of in an authorized hazardous waste facility.

When the Design Documents specify the existing coating to be removed contains Hazardous Materials and steel grit is used as the abrasive, the waste generated is classified as hazardous or Universal Waste regardless of the results of the TCLP. For manifesting purposes, TxDOT is considered the waste generator for paint removal wastes generated from structures owned or controlled by the State. Dispose of this waste in compliance with applicable waste rules and regulations as specified above and by the Contract.

Provide copies of all test reports and transportation manifests to TxDOT before shipping waste. Provide signed original manifests to TxDOT verifying all steps of the handling and disposal process were correctly handled.

Miscellaneous. Stencil on the exterior face of the outside beam the control, section, and structure number upon completion of the painting operations for each structure. Stencil on the interior face of the outside beam the completion date of the painting operation. Do this Work at each end of the structure where painting is specified.

Item 447

32. Structural Bolting

1. DESCRIPTION

Furnish and install high-strength bolts for structural connections.

2. MATERIALS

2.1. **General**. Use the same Supplier for bolts and nuts to ensure proper fit. Have the manufacturer or distributor perform rotational-capacity (R-C) tests in accordance with Tex-452-A on all bolt, nut, and washer assemblies. Test each combination of bolt production lot, nut lot, and washer lot as an assembly and assign an R-C lot number to each lot tested. Test 2 samples from each assigned R-C lot.

Furnish a manufacturer's certified test report (MCTR) or a distributor's certified test report (DCTR) for each R-C lot supplied. Include in the MCTR or DCTR:

- results of the R-C tests,
- R-C lot number,
- manufacturing location for assembly components,
- date and location of tests, and
- a statement that the materials represented by the test report conform to the specifications.

2.2. **Bolt Assemblies**. Provide bolts, nuts, and washers meeting the type, grade, and finish requirements in Table 1.

Use ASTM A325 Type 1 galvanized bolts.

Provide bolts long enough for the installed bolt end to be flush with or outside the face of the nut.

Ensure galvanized nuts are lubricated with a lubricant containing a dye of a color that contrasts with the color of the galvanizing. Order ASTM A563 nuts with supplemental requirement S2 if they will be galvanized.

Table 1

ASTM Type, Finish, and Grade for Structural Bolts, Nuts, and Washers

	ASTM Designation	Bolt Type	Bolt Finish	ASTM A563 Nut Grade and Finish	ASTM F436 Washer Type and Finish
Heavy-Hex Bolts	A325	1	Galvanized	DH[1]; galvanized and lubricated	1; galvanized
		3	Plain	C3 and DH3; plain	3; plain
		A490	3	Plain	DH3; plain
Tension-Control Bolts			Galvanized	DH[1]; galvanized and lubricated	1; galvanized
		3	Plain	C3 and DH3; plain	3; plain
	F2280	3	Plain	DH3; plain	3; plain
ASTM A194 Heavy Hex Grade 2H nuts may be substituted.					

2.3. **Washer-Type Indicating Devices**. Use compressible-washer-type direct tension indicators that meet ASTM F959 if allowed. Provide detailed testing, installation, and inspection requirements prepared by the manufacturer.

2.4. **Storage**. Protect all bolts and nuts from dirt and moisture at the jobsite. Remove from protected storage only those bolts and nuts anticipated to be installed during a workday. Return unused fasteners to protected storage at the end of the day. Do not clean fasteners of lubricant present in the as-delivered condition. Perform a field R-C test in accordance with Tex-452-A on any lot of fasteners that shows signs of rust, dirt, or loss of lubrication. Apply additional lubrication and rerun the R-C test before installing bolts if the fasteners fail the R-C test. Replace any fasteners that cannot be re-lubricated to pass the field R-C test. Tension control bolts may only be re-lubricated by the manufacturer.

2.5. **Sampling and Testing**. Sample high-strength bolts, nuts, and washers in accordance with Tex-719-I. Perform field R-C tests in accordance with Tex-452-A. Perform installation verification tests required in Section 447.4.1., "Verification Testing."

2.6. **Fitup Bolts and Erection Pins**. Provide heavy-hex fitup bolts of the same diameter as the connection bolts. Do not use washer-type indicating devices for fitups. Do not reuse galvanized bolts or ASTM A490 bolts that have been used as fitup bolts. Provide a sufficient number of erection or drift pins, 1/32 in. larger than the bolt diameter.

2.7. **Paint Markers**. Provide white or yellow paint markers for marking bolts or nuts for wrench calibration, R-C Tests, and bolt installation.

3. EQUIPMENT

3.1. **Testing Equipment**. Provide a calibrated tension-measuring device (Skidmore-Wilhelm or equivalent), calibrated torque wrench, and other accessories necessary to perform the installation verification test and the R-C test and to calibrate hydraulic or electric torque wrenches.

3.2. **Wrenches**. Furnish either of the following types of wrenches.

3.2.1. **Air-Driven Impact Wrenches**. Furnish air-driven impact wrenches, air compressors, and related accessories of sufficient capacity to properly tension high-strength bolts. Impact wrenches should be of sufficient size and capacity to be able to tension fully a bolt in less than 15 seconds. Repair or replace any wrenches that are unable to apply full tension to a bolt within this time.

3.2.2. **Calibrated Torque Wrenches**. Furnish calibrated hydraulic or electric torque wrench and related accessories capable of properly tensioning high-strength bolts. Calibrate the wrench to stall out or cut out completely when the bolt tension reaches 1.05 times the tension specified in Table 2. Calibrate the wrench by tensioning 3 bolts of each size in a calibrated tension-measuring device (Skidmore-Wilhelm or equivalent). Mark each bolt and verify the rotation from snug-tight when calibrating the wrench as specified in Section 447.4.5.3.1., "Turn-of-the-Nut Method." Calibrate the wrench at least once each Business Day. Recalibrate the wrench for changes in bolt diameter; changes in bolt length greater than two bolt diameters; significant differences in the surface condition of the bolts, threads, nuts, or washers; or changes in the equipment or hose length.

4. CONSTRUCTION

4.1. **Verification Testing**. Have each member of the bolting crew that will perform the actual Work complete an acceptable pre-installation verification test in the presence of TxDOT. Only crewmembers that have demonstrated proper workmanship via verification testing may perform production bolting Work.

4.1.1. **Air-Driven Impact Wrench**. Perform an installation verification test on 3 complete fastener assemblies of each combination of diameter, length, grade, and lot to be installed before beginning bolting. Follow the bolt-tensioning procedures in Section 447.4.5.3., "Tension Bolts." Use a calibrated tension-measuring device (Skidmore-Wilhelm or equivalent) to verify and demonstrate that the method for estimating the snug-tight condition and controlling the turns from snug-tight develops a tension greater than 1.05 times the tension specified in Table 2. The snug-tight condition is defined as the tightness that exists when the plies of the joint are in firm contact.

4.1.2. **Calibrated Torque Wrench**. Calibrate the wrench before beginning bolting in accordance with Section 447.3.2.2., "Calibrated Torque Wrenches." Use the bolting crew that will perform the actual Work for the calibration and calibrate the wrench in the presence of TxDOT. Follow the bolt-tensioning procedures in Section 447.4.5.3., "Tension Bolts."

4.1.3. **Direct-Tension Indicator**. Use a calibrated tension-measuring device for compression-type indicators to verify the gap is not less than 0.015 in. or the job inspection gap specified by the manufacturer when tension in the bolt reaches 1.05 times the tension specified in Table 2.

Follow the manufacturer's instructions for pre-installation verification testing methods and frequency for alternative washer-type indicating devices deemed acceptable.

4.2. **Workmanship**. TxDOT will disqualify any crewmembers not adhering to proper installation methods during production Work. Disqualified crew may not perform further bolting Work until they complete an additional pre-installation verification test suitable to TxDOT.

4.3. **General**. Ensure all material within the grip of the bolt is steel. Do not allow any compressible material such as gaskets or insulation within the grip. Ensure the slope of parts in contact with the bolt head or nut does not exceed 1:20 with respect to a plane normal to the bolt axis. Prepare all joint surfaces, including those in contact with the bolt heads, nuts, or washers, so that the surfaces are free of dirt, loose rust, loose mill scale, burrs, and other matter that would prevent solid seating of the parts.

Replace any bolts and nuts installed for shipping purposes unless the shop drawings indicate the shop-installed bolts are to be fully tensioned in the shop. Do not tension bolts that have been installed snug-tight in the shop. Remove any bolts installed snug-tight in the shop and replace

them with new bolts. Inspect and prepare the joint surfaces after removing shop-installed bolts that are not fully tensioned in the shop.

Provide a hardened washer for heavy-hex and tension-control bolts under either the nut or the bolt head, whichever is turned during tensioning. Install hardened washers under both the nut and bolt head of ASTM A490 bolts when the outer plies being fastened have a yield strength less than 40 ksi.

Install an ASTM F436 washer for direct tension indicators as follows:

- under the nut when the nut is turned and the direct tension indicator is located under the bolt head;
- between the nut and the direct tension indicator when the nut is turned and the direct tension indicator is located under the nut;
- under the bolt head when the bolt head is turned and the direct tension indicator is located under the nut; and
- between the bolt head and the direct tension indicator when the bolt head is turned and the direct tension indicator is located under the bolt head.

Tension all bolts to provide the minimum bolt tension values given in Table 2.

Erect steel in conformance with Item 441, “Steel Structures.” Do not tack-weld any parts to eliminate fitup bolts or to hold parts together while bolting.

Remove lubricant from bolt assemblies on painted structures after tensioning and before coating the connections.

Re-tighten the nuts or tack weld the nuts to the bolts when bolts are used to temporarily support welded diaphragms after completing the welding operations if the diaphragms are over vehicular or pedestrian traffic.

Table 2

Bolt Tension

Nominal Bolt Size, in.	Minimum Tension (kips)	
	ASTM A325 Bolts	ASTM A490 Bolts
1/2	12	15
5/8	19	24
3/4	28	35
7/8	39	49
1	51	64
1-1/8	56	80
1-1/4	71	102
1-3/8	85	121
1-1/2	103	148

4.4. **Preparation of Faying Surfaces**. Perform blast cleaning or painting of faying surfaces in accordance with Item 441, "Steel Structures."

Roughen galvanized faying surfaces by hand wire-brushing. Do not use power wire brushes to roughen galvanized faying surfaces.

4.5. **Bolt Installation.** Use the following procedure for bolt installation of a complete connection:

4.5.1. **Fair-Up Holes**. Use a minimum number of erection or drift pins in the holes to “fair-up” all holes.

4.5.2. **Install Bolts**. Install bolts in all remaining holes of the connection. Do not use excessive force, which results in damage to the threads, to install the bolts. Increase the number of erection or drift pins as necessary to align the holes if force is required to install the bolts. Do not ream the holes. Ream the holes in accordance with Section 441.3.11.5., “Misfits,” if approved. Remove the erection or drift pins and install bolts in these holes. Bring the connection to a full snug-tight condition by snugging systematically from the most rigid part of the connection to the free edges. The snug-tight condition is defined as the tightness that exists when the plies of the joint are in firm, full contact and all of the bolts in the joint have been tightened sufficiently to prevent the removal of the nuts without the use of a wrench. A snug-tight condition can usually be attained by a few impacts of an impact wrench or the full effort of a worker using an ordinary spud wrench as demonstrated in the installation verification test. As necessary, re-snug previously snugged bolts that may have relaxed as a result of the subsequent snugging of adjacent bolts to ensure all bolts are simultaneously snug-tight and the connection plates are in full contact.

Fully tighten a minimum number of bolts until the plies are in full contact if snugging does not bring the plies of the joint into full contact. Mark these bolts as fitup bolts. Use a non-galvanized

ASTM A325 bolt of the same diameter as a fitup bolt in connections requiring the use of galvanized ASTM A325 bolts or ASTM A490 bolts. Re-snug all remaining bolts.

Do not use washer-type indicating devices to bring the connection to a snug-tight condition. Rather, install heavy-hex bolt assemblies in a sufficient number of holes (approximately 20%) to attain firm, full contact between plies. Remove the heavy-hex bolts and install the washer-type indicating device assemblies after firm contact is established by connections in surrounding bolt holes.

4.5.3. **Tension Bolts**. Loosen all fitup bolts after tensioning all the other bolts in the connection. Ungalvanized ASTM A325 bolts used as fitup bolts may be reused in a connection using this type of bolt. Replace all galvanized bolts and ASTM A490 bolts used as fitup bolts. Tension these remaining untensioned bolts in accordance with this paragraph. Ensure the Element not turned by the wrench (bolt head or nut) does not rotate.

4.5.3.1. **Turn-of-the-Nut Method**. Match-mark the nuts and the protruding bolt ends after the bolts have been brought up to snug-tight condition and before final tensioning so that actual rotation can be determined. Tension all bolts in the connection to their final tension by the amount of rotation specified in Table 3. Start final tensioning at the center or most rigid part of the connection and progress toward the free edges.

4.5.3.2. **Calibrated Wrench Method**. Use a calibrated hydraulic torque wrench to tension all bolts to 1.05 times the tension given in Table 1 after they have been brought to the snug-tight condition. Calibrate the wrench in accordance with Section 447.3.2.2., “Calibrated Torque Wrenches.” Start tensioning at the most rigid part of the connection and proceed to the free edges. Return the wrench to re-tension previously tensioned bolts that may have relaxed as a result of the subsequent tensioning of adjacent bolts. Place marks on the socket at one-third points so the amount of rotation can be visually determined.

4.5.3.3. **Washer-Type Indicating Devices**.

4.5.3.3.1. **Compressible-Washer-Type Direct Tension Indicators**. Ensure the direct-tension indicator arches are oriented away from the Work and that they bear against the hardened bearing surface. Confirm the appropriate feeler gage is 1) accepted in at least half the spaces between protrusions before tensioning, and 2) refused entry in at least half the spaces between protrusions after tensioning.

4.5.3.3.2. **Alternative Washer-Type Indicating Devices**. Follow the procedures prepared by the manufacturer. Verify proper installation after tensioning.

4.5.4. **Bolt Reuse**. Do not re-use ASTM A490 or galvanized ASTM A325 bolts,. Ungalvanized ASTM A325 bolts may be re-used one time if the threads have not been damaged. Re-tensioning previously tensioned bolts loosened by the tensioning of adjacent bolts is not considered to be reuse.

Tension all bolts in a connection within 10 Days of installation. Bolts not tensioned within 10 Days of installation are subject to field R-C testing. Re-lubricate or replace any installed bolts that do not have sufficient lubrication as determined by the field R-C test.

Table 3

Nut Rotation from Snug-Tight Condition[1]

Bolt length (underside of head to end of bolt)	Disposition of Outer Face of Bolted Parts		
	Both faces normal to bolt axis	**One face normal to bolt axis and other face sloped less than 1:20 (beveled washer not used)**	**Both faces sloped less than 1:20 from bolt axis (beveled washer not used)**
Up to and including 4 bolt diameters	1/3 turn	1/2 turn	2/3 turn
Over 4 bolt diameters up to and including 8 diameters	1/2 turn	2/3 turn	5/6 turn
Over 8 bolt diameters up to and including 12 diameters[2]	2/3 turn	5/6 turn	1 turn

1. Nut rotation is relative regardless of the Element (nut or bolt) being turned. The tolerance is –0°, +30° for bolts installed by 1/2 turn or less and –0°, +45° for bolts installed by 2/3 turn or more.
2. Determine the required rotation for bolt lengths greater than 12 diameters using the installation verification test in a simulated connection of solidly fitted steel.

Item 448

33. Structural Field Welding

1. DESCRIPTION

Field-weld metal members using the shielded metal arc or flux cored arc welding processes.

2. MATERIALS

Provide electrodes for shielded metal arc welding (SMAW) conforming to the requirements of the latest edition of ANSI/AWS A5.1 or ANSI/AWS A5.5.

Provide electrodes for flux cored arc welding (FCAW) conforming to the requirements of the latest edition of ANSI/AWS A5.20 or ANSI/AWS A5.29.

Provide electrodes and flux-electrode combinations named on the approved list maintained by TxDOT. To request that a product be added to this list or to renew an expired approval, Developer or the consumable manufacturer must submit certified reports of all tests required by the applicable AWS A5 specification according to the applicable welding code to TxDOT. For most structural steel construction, the applicable welding code is AASHTO/AWS D1.5 or ANSI/AWS D1.1. For reinforcing steel, the applicable code is ANSI/AWS D1.4. Tests must be conducted on electrodes of the same class, size, and brand and manufactured by the same process and with the same materials as the electrodes to be furnished. Resubmit electrodes or flux-electrode combinations every 12 months for renewal.

Table 1 shows the classes of electrodes required. Use electrodes with the type of current, with the polarity, and in the positions permitted by AWS A5.1 and A5.5 for SMAW. AWS A5.20 and A5.29 specifications govern for FCAW. Obtain approval for electrode use on steel not listed in Table 1.

Table 1

Classification of Electrodes Permitted

Type of Steel (ASTM Standards)	Electrode Specification	Process	Filler Metal Requirements
Steel piling Armor joints A500 A501	AWS A5.1 or A5.5	SMAW	E60XX E70XX or E70XX-X
	AWS A5.20 or A5.29	FCAW	E6XTX-X E7XTX-X (except -2, -3, -10, -GS)
A36 A572 Gr. 50 A588 A242 A709 Gr. 36. 50, or 50S	AWS A5.1 or A5.5	SMAW	E7016 E7018 E7028
	AWS A5.20 or A5.29	FCAW	E7XT-1 E7XT-5 E7XT-6 E7XT-8
Reinforcing steel Grade 40	AWS A5.1 or A5.5	SMAW	E70XX
Reinforcing steel Grade 60	AWS A5.5	SMAW	E90XX
Permanent metal deck forms	AWS A5.1 or A5.5	SMAW	E6010 E6011 E6013 E7018

Note—Low-hydrogen electrodes applicable to the lower strength base metal may be used in joints involving base metals of different yield points or strengths.

Use E7010 and E8010 electrodes when welding the root passes of beam and girder splices if the requirements of Section 448.4.3.5.1., “High-Cellulose Electrodes for Root Passes,” are met.

Use electrodes meeting the diffusible hydrogen requirements for fracture-critical welding in AASHTO/AWS D1.5 when welding fracture-critical applications.

Use gas or gas mixtures that are welding grade and have a dew point of −40ºF or lower for gas-shielded FCAW. Furnish certification that the gas or gas mixture is suitable for the intended application and will meet the dew point requirements.

3. EQUIPMENT

Provide electrode drying and storing ovens that can maintain the required temperatures specified in Section 448.4.3.1., “Electrode Condition.” Each oven must have a door that is sealed and can be latched. Each oven must have a small port that may be opened briefly to insert a

thermometer or the oven must be equipped with a thermometer that allows for direct reading of temperature inside the oven without opening the oven. Provide equipment able to preheat and maintain the temperature of the base metal as required and as shown on the Design Documents. Provide approved equipment (e.g., temperature indicator sticks or infrared thermometer) for checking preheat and interpass temperatures at all times while welding is in progress. Provide welding equipment meeting the requirements of the approved welding procedure specifications (WPS), if required, and capable of making consistent high-quality welds.

4. CONSTRUCTION

4.1. **Procedure Qualification**. Use the proper classification and size of electrode, arc length, voltage, and amperage for the thickness of the material, type of groove, welding positions, and other circumstances of the Work.

Submit WPSs for FCAW, qualified in accordance with AASHTO/AWS D1.5 for approval before any field welding on a project.

4.2. **Welder Qualification**. Provide TxDOT certification papers for each welder and for each welding process to be used before welding, except for miscellaneous welds described in Section 448.4.2.1.1., "Miscellaneous Welding Applications." Certification is issued by TxDOT as described in Section 448.4.2.2., "Certified Steel Structures Welder."

4.2.1. **Miscellaneous Welding**. A qualified welder is an experienced welder who is capable of making welds of sound quality but does not have TxDOT certification papers. TxDOT will check the welder's ability by conducting a jobsite test in accordance with Section 448.4.2.1.2., "Miscellaneous Weld Qualification Test," before welding begins. Furnish all materials and equipment necessary for this test.

4.2.1.1. **Miscellaneous Welding Applications**. A welder certified for structural or reinforcing steel or a qualified welder may make miscellaneous welds of the following types:

- splicing reinforcing steel to extend bars in the bottom of a drilled shaft;
- attaching chairs to the reinforcing steel cage of a drilled shaft;
- armor joints and their supports;
- screed rail and form hanger supports where permitted on steel units;
- reinforcing steel to R-bars for lateral stability between prestressed beams, spirals, or bands to reinforcing bars in drilled shaft cages;
- permanent metal deck forms;
- additional steel added in railing when slip-form construction is used; and
- other similar miscellaneous members that have no load-carrying capacity in the completed structure.

4.2.1.2. **Miscellaneous Weld Qualification Test**. A qualified welder must pass a jobsite Miscellaneous Weld Qualification Test before welding:

- Make a single-pass fillet weld of 1/4 in. maximum size in the vertical position approximately 2 in. long on 1/2-in. plate in the location shown in Figure 1. Use the same electrode proposed for the Work.
- TxDOT will visually inspect the fillet weld for a reasonably uniform appearance and then rupture the weld as shown in Figure 2 with a force or by striking it with a hammer.

- The fractured surface of the weld shall be inspected to ensure complete penetration into the root of the joint, complete fusion to the base metal, and no inclusion or porosity larger than 3/32 in. in its greatest dimension.

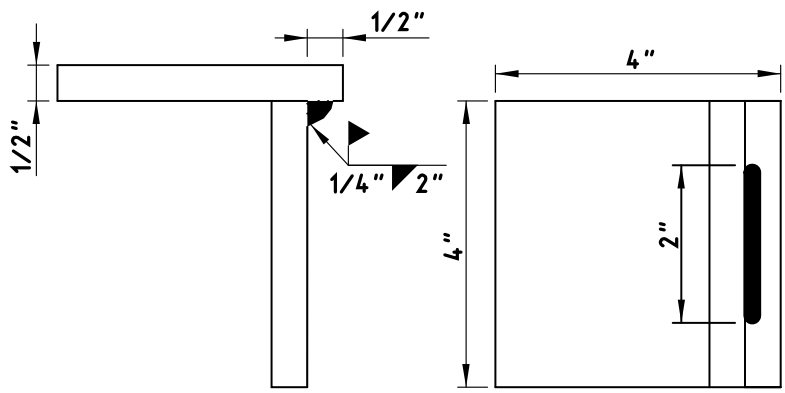

Figure 1

Miscellaneous qualification—fillet weld break specimen.

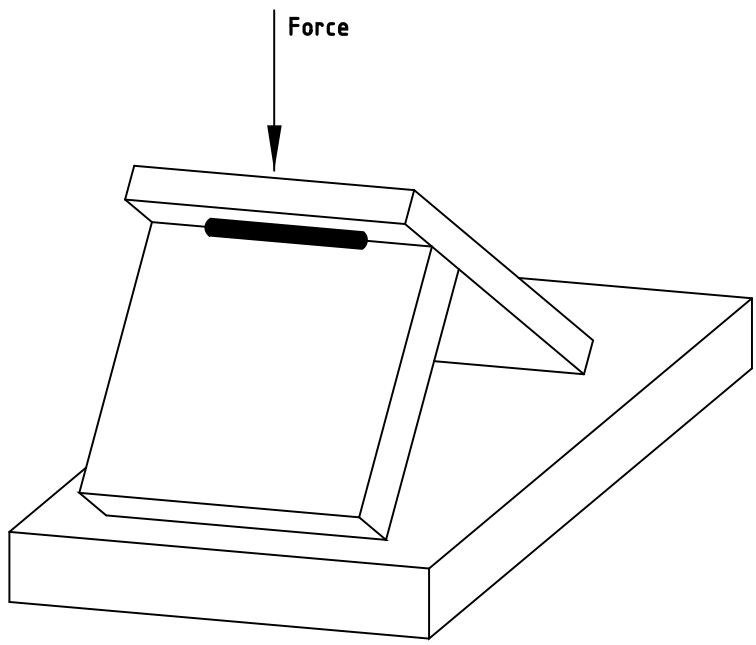

Figure 2

Miscellaneous qualification—method of rupturing specimen.

A welder who fails the Miscellaneous Weld Qualification Test may take a retest under the following conditions:

- The retest occurs immediately and consists of 2 test welds as described above with both test specimens meeting all of the requirements.

- The retest occurs after 30 Days if the welder provides evidence of further training or practice. In this case the test consists of a single test weld.

Qualification by the Miscellaneous Weld Qualification Test is effective immediately upon satisfactory completion of the test and remains in effect for the duration of a project.

4.2.2. **Certified Steel Structures Welder**. Before making non-miscellaneous welds on structural steel, a welder must pass the AASHTO/AWS D1.5 qualification test for groove welds for plates of unlimited thickness in the vertical (3G) and overhead (4G) positions with the following additional requirements:

- Use metal for test plates that meets Item 442, "Metal for Structures," with a minimum yield point of 36 ksi. The minimum width of test plate must be sufficient to accommodate the radiograph inspection of 5-1/4 continuous inches of the weld, not counting the ends of the weld.
- Use approved electrodes meeting the required class in accordance with Table 1 and, in the case of FCAW, in accordance with the approved WPS.
- Have a radiographic inspection performed on the weld on each test plate. Any porosity or fusion-type discontinuity with greatest dimension larger than 1/16 in. found in the weld will result in failure of the test. Discontinuities with greatest dimension less than 1/16 in. are acceptable provided the sum of their greatest dimensions does not exceed 3/8 in. in any inch of weld.
- Have two side-bend specimens prepared, tested, and inspected for each test plate.

The test must be administered by an approved laboratory and welding observed by laboratory personnel. Submit 2 copies of the certification issued by the laboratory, all accompanying test papers, and the radiographic films to TxDOT for review. TxDOT issues certification papers if the laboratory's certification is approved. A welder must also demonstrate a thorough knowledge of the required welding procedures together with the ability and desire to follow them and make welds of sound quality and good appearance. The certification issued by an approved laboratory is accepted for 1 mo. from the time of certification, during which time the welder may work on TxDOT projects if the Work is satisfactory. Certification papers issued by TxDOT remain in effect as long as the welder performs acceptable Work as determined by TxDOT. The certification may be cancelled at any time if the welder's work is not acceptable.

For SMAW, a welder certified using EXX18 electrodes is qualified to weld with all approved SMAW electrodes up to E90XX to join metals with a maximum specified yield strength of 65 ksi.

4.3. **Welding Steel Structures**.

4.3.1. **Electrode Condition**.

4.3.1.1. **SMAW**. Dry electrodes with low-hydrogen coverings in conformance with AWS A5.1and the manufacturer's written drying instructions or for at least 2 hours between 450°F and 500°F. Dry electrodes with low-hydrogen coverings in conformance with AWS A5.5 for at least 1 hr. between 700°F and 800°F or as specified by the electrode manufacturer. If using electrodes from a newly opened, undamaged, hermetically sealed container, drying is not required. Store electrodes in ovens held at a temperature of at least 250°F immediately after drying or removal from hermetically sealed container. Elapsed time permitted between removal of an electrode from the storage oven or hermetically sealed container and use of the electrode is given in

Table 2. If the electrodes have the moisture resistance designator "R" and are being used on steel with minimum specified yield strength of 50 ksi or less, exposure time may be increased up to 9 hr.

Table 2

SMAW Electrode Exposure Limits

Electrode Type	Exposure Time (hr.)
E70	4
E80	2
E90	1

Leave electrodes in the holding oven for at least 4 hr. at 250°F before reusing if they are placed back in it before the times given in Table 2 have lapsed. Do not redry electrodes more than once. Do not use electrodes with flux that has been wet, cracked, or otherwise damaged.

4.3.1.2. **FCAW**. Protect or store welding wire coils removed from the original package to keep their characteristics or welding properties intact. Do not use coils or portions of coils that are rusty.

4.3.1.3. **Special Applications**. Dry electrodes for fracture-critical applications or when welding steel not shown in Table 1 in accordance with the manufacturer's specifications and AASHTO/AWS D1.5.

4.3.2. **Environmental Conditions**. Do not weld when the air temperature is lower than 20°F; when surfaces are wet or exposed to rain, snow, or wind; or when operators are exposed to inclement conditions. Provide wind breaks to protect welding operations from winds greater than 5 mph.

4.3.3. **Assembly and Fitup**. Verify that ends of members to be welded are prepared in accordance with the welded joint detail specified. See Figures 3, 4, and 5 for proper end preparation and weld details of girder splices.

Bring the parts to be joined by fillet welds into as close contact as possible, not separated more than 3/16 in. Increase the leg of the fillet weld by the amount of the separation if the separation is 1/16 in. or more. Keep the separation between faying surfaces of lap joints and of butt joints landing on backing strips to no more than1/16 in.

Make suitable allowance for shrinkage, and never restrain the joint on both sides in any welding process.

Use the following fitup procedure for groove welds for butt joints:

- Align splices of beams and girders joined by groove welds with the center of gravity of both cross-sections coinciding or each flange vertically offset equally. Fit beams and girders with offset webs with the webs aligned and the flanges offset laterally. Make the joint with a smooth transition between offset surfaces and with a slope of no more than1:4 when flanges are offset or abutting parts differ in thickness or width by more than 1/8 in.
- Space members to provide a 3/16-in. root opening at the nearest point. At other points of the joint when the spacing provides up to a 7/16-in. opening, correction may be made by buildup up to 1/8 in. on each bevel nose. Rebevel openings exceeding 7/16 in. and move the

parts to be joined closer together to bring the joint within the maximum buildup limits. Allow buildups to cool to the maximum preheat and interpass temperatures before welding the joint.

- Bring all members into correct alignment and hold them in position by acceptable clamps while welding.

Complete all butt splices before welding diaphragms or sway bracing in a particular section of a unit. Diaphragms and sway bracing may be welded in a unit behind the splice welding to provide stability except where such welding interferes with butt splice adjustments, such as at a drop-in segment of a continuous unit. Complete all splices before welding beams or girders to shoes.

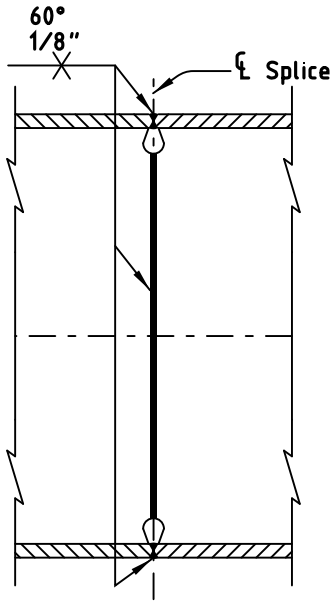

Figure 3

Girder splice details.

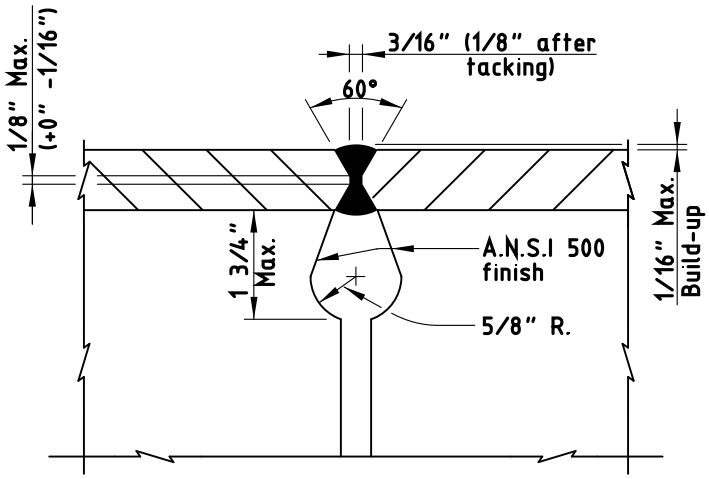

Figure 4

Girder splice details (flange).

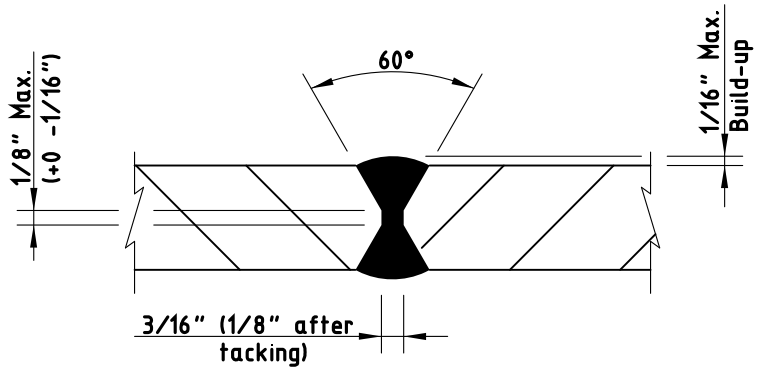

Figure 5

Girder splice details (web).

4.3.4. **Preheat**. Preheat ahead of welding both groove and fillet welds (including tack welding) to the temperatures shown in Table 3. Keep preheat and interpass temperatures high enough to prevent cracks. The preheat temperatures shown in Table 3 are minimums, and higher preheats may be necessary in highly restrained welds. Preheat the base metal when it is below the required temperature so that parts being welded are not cooler than the specified temperature within 3 in. of the point of welding.

Measure preheat temperature on the side opposite to which the heat is applied at points approximately 3 in. away from the joint.

Completely weld a joint before allowing it to cool below the specified temperature. Always deposit enough weld to prevent cracking before allowing a joint to cool. Do not allow preheat and interpass temperatures to exceed 400°F for thickness up to 1-1/2 in. and 450°F for greater thicknesses.

Table 3

Minimum Preheat and Interpass Temperature for Welding with Low-Hydrogen Electrodes

Thickest Part at Point of Welding	Temperature
Up to 3/4 in., inclusive	50°F
More than 3/4 in. up to 1-1/2 in., inclusive	70°F
More than 1-1/2 in. up to 2-1/2 in., inclusive	150°F
More than 2-1/2 in.	225°F

Preheat the material in accordance with Table 4 when E7010 or E8010 electrodes are used for tacking or temporary root pass.

Table 4

Minimum Preheat Temperature for Welding with E7010 or E8010 Electrodes

Thickest Part at Point of Welding	Temperature
1/2 in. and less	150°F
9/16 in. through 3/4 in.	200°F
13/16 in. through 1-1/2 in.	300°F
More than 1-1/2 in.	400°F

Use preheat and interpass temperatures for the thicker plate thickness when joining steels of different thickness.

Preheat base metal to at least 70°F when the base metal temperature is below 32°F. and maintain this minimum temperature during welding. Preheat base metal to 200°F before starting to weld if it is moist.

Preheat fracture-critical applications in accordance with AASHTO/AWS D1.5.

4.3.5. **Welding Practice**. Use an approved procedure to control shrinkage and distortion. Weld FCAW in accordance with an approved WPS. Weld as required by the Contract or erection drawings. Do not change the location or size of welds without approval. Do not make temporary welds for transportation, erection, or other purposes on main members except as shown on the Design Documents or approved. Use a crayon, paint, or other approved method to mark each groove weld to identify the welder who performed the Work.

Use the stringer-bead technique where possible for groove welds. Progress upward in vertical welding passes using a back-step sequence keeping the end of the low-hydrogen electrode contained within the molten metal and shield of flux unless the electrode manufacturer's specifications indicate otherwise.

Begin and terminate groove welds at the ends of a joint on extension bars. Make edge preparation and thickness of extension bars the same as that of the member being welded but extending at least 2 in. beyond the joint. Remove extension bars with a cutting torch or arc-air gouging, and grind the flange edges smooth after the weld is completed and cooled. Clean any defects exposed by the grinding, fill them with weld metal, and regrind them to a uniform finish. Grind so that grind marks are parallel to the flange, and avoid excess grinding of the parent metal. Clean and fuse tack welds thoroughly with the final weld. Remove defective, cracked, or broken tack welds.

Gouge, chip, or otherwise remove the root of the initial weld to sound metal for all groove welds, except those produced with the aid of backing or those on steel piling or armor joints, before welding is started on the second side. Clean the back side thoroughly before placing the backup pass. Fuse the weld metal thoroughly with the backing, and use backing that is continuous for the full length of the weld. Make a continuous length of backing by welding shorter sections together only under the following conditions:

- All splices in the backing are complete joint penetration (CJP) groove welds made with the same controls as similar CJP groove welds in the structure.

- The welds are radiographed and examined as described in Section 448.4.3.7., "Radiographic Inspection" to ensure weld soundness.
- All welding and testing of the backing is complete before the backing is used to make the structural weld.

4.3.5.1. **High-Cellulose Electrodes for Root Passes**. Use E7010 and E8010 electrodes when welding the root passes of beam and girder splices if the Work is preheated in accordance with Table 4. Remove the E7010 or E8010 electrode pass completely by arc-air gouging, and replace it using a low-hydrogen electrode after the root passes are backed up.

4.3.5.2. **Welding Sequence**. Make beam and girder splices using the sequences shown in Figure 6. (Some members will require fewer or more passes than Figure 6 shows.) Alternate welds from flat to overhead to prevent heat buildup along bevel edge. Arrange the passes between the top and bottom flange to maintain balance and symmetry.

Place passes 1, 2, and 3 in the top flange, followed by passes 4, 5, and 6 in the bottom flange (see Figure 6) for rolled I-beams and built-up girders. Gouge out and replace passes 1 and 4, which always are placed in the overhead position. Next, place passes 7, 8, and 9 in the top flange, followed by passes 10, 11, and 12 in the bottom flange. Continue with placing passes 13–17 in the top flange, followed by passes 18–22 in the bottom flange. Continue to alternate welding between top and bottom flange with a maximum of 5 passes per flange until the flange splices are complete. Tack weld web after aligning girder webs with short tacks as required to obtain proper alignment. Place pass 23 and pass 24 on the web. Gouge out and replace pass 23. Finish web splice with pass 25.

Remove all slag for each layer, bead, and the crater area, and clean the weld and adjacent base metal before welding over previously deposited metal. Avoid arc strikes, and if they occur, grind resulting cracks and blemishes out to a smooth contour, checking them visually to ensure soundness.

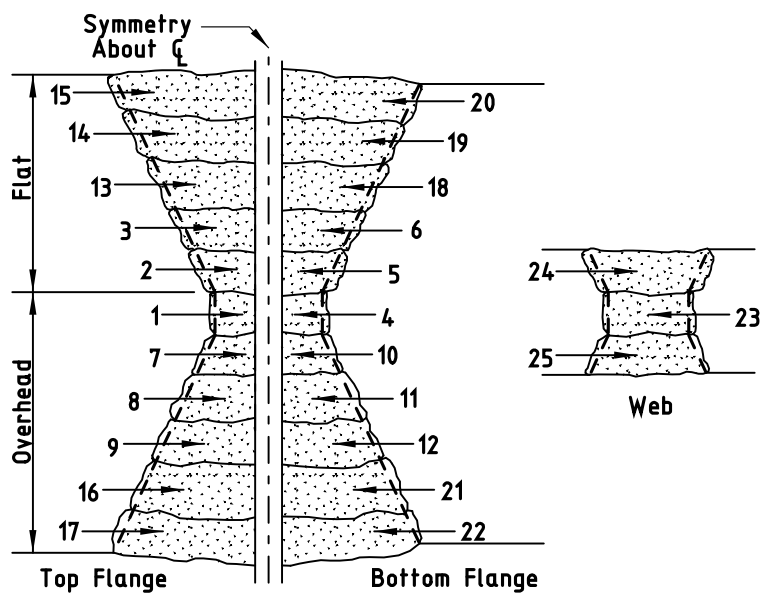

Figure 6

Welding sequence for splices for material up to 50,000-psi yield strength.

Deviation from the above sequence of weld passes requires approval. Obtain approval from TxDOT for welding procedures and sequences for special connections.

4.3.5.3. **Electrode Size and Weld Layer Thickness**.

4.3.5.3.1. **SMAW**.

4.3.5.3.1.1. **Electrode Size**. Use electrodes with the following maximum size:

1/4 in. for all welds made in the flat position except root passes,
1/4 in. for horizontal fillet welds,
1/4 in. for root passes of fillet welds made in the flat position and of groove welds made in the flat position with backing and with a root opening of 1/4 in. or more,
5/32 in. for welds made with low-hydrogen electrodes in the vertical and overhead positions, and
3/16 in. for all other welds.

4.3.5.3.1.2. **Weld Size and Layer Thickness**. Make the root pass large enough to prevent cracking. Make layers subsequent to the root pass in fillet welds and all layers in groove welds of the following maximum thickness:

1/4 in. for root passes of groove welds;
1/8 in. for subsequent layers of welds made in the flat position; and
3/16 in. for subsequent layers of welds made in the vertical, overhead, and horizontal positions.

Make fillet welds passes using no larger than:

3/8 in. in the flat position,
5/16 in. in the horizontal or overhead positions, and
1/2 in. in the vertical position.

4.3.5.3.2. **FCAW**.

4.3.5.3.2.1. **Electrode Size**. Use electrodes with the following maximum size:

- 5/32 in. for the flat and horizontal positions,
- 3/32 in. for the vertical position, and
- 5/64 in. for the overhead position.

4.3.5.3.2.2. **Weld Size and Layer Thickness**. Make weld layers, except root and surface layers, no thicker than 1/4 in. Use a multiple-pass split-layer technique when the root opening of a groove weld is 1/2 in. or wider. Use the split-layer technique to make all multiple-pass welds when the width of the layer exceeds 5/8 in.

Ensure each pass has complete fusion with adjacent base metal and weld metal and that there is no overlap, excessive porosity, or undercutting.

Do not use FCAW with external gas shielding in a draft or wind. Furnish an approved shelter of material and shape to reduce wind velocity near the welding to a maximum of 5 mph.

Make fillet weld passes using no larger than:

- 1/2 in. in the flat position,

- 3/8 in. in the horizontal or overhead positions, and
- 5/16 in. in the vertical position.

4.3.6. **Weld Quality**. Provide welds that are sound throughout with no cracks in the weld metal or weld pass. Completely fuse the weld metal and the base metal and each subsequent pass. Keep welds free from overlap, and keep the base metal free from undercut more than 1/100 in. deep when the direction of undercut is transverse to the primary stress in the part that is undercut. Fill all craters to the full cross-section of the welds.

4.3.7. **Radiographic Inspection**. Conduct radiographic testing (RT) as required in the field by an agency or individual registered and licensed to perform industrial radiography. Follow all applicable rules and regulations for radiographic operations. Testing includes furnishing all materials, equipment, tools, labor, and incidentals necessary to perform the required testing. TxDOT may require further tests and may perform additional testing, including other methods of inspection.

Perform RT in accordance with AASHTO/AWS D1.5. Iinterpret the resulting radiographs in accordance with AASHTO/AWS D1.5. All radiographs become the property of TxDOT.

Radiographically inspect the full flange width of all flange splices and the top and bottom 1/6 of the web at each splice for field-welds of splices in beams or girders. Radiographically retest repaired welds. Make necessary repairs before any further Work is done. RT of particular welds required by the Design Documents is in addition to the RT required by this Item.

Meet the requirements specified in Section 441.3.2.5.1., “Radiographic Testing” for radiograph film quality.

4.3.8. **Corrections**. When welding is unsatisfactory or indicates inferior workmanship, perform corrective measures and obtain approval of the subsequent corrections.

Use oxygen gouging or arc-air gouging when required to remove part of the weld or base metal. Back-gouge splices in beams and girders or cut out defective welds using arc-air gouging by a welder qualified to make beam and girder splices.

Slope the sides of the area to be welded enough to permit depositing new metal were corrections require depositing additional weld metal.

Use a smaller electrode than that used for the original weld where corrections require depositing additional weld metal. Clean surfaces thoroughly before re-welding.

Remove cracked welds completely and repair. Remove the weld metal for the length of the crack if crack length is less than half the length of the weld plus 2 in. beyond each end of the crack, and repair.

Restore the original conditions where Work performed after making a deficient weld has made the weld inaccessible or has caused new conditions making the correction of the deficiency dangerous or ineffectual by removing welds, members, or both before making the necessary corrections; otherwise, compensate for the deficiency by performing additional Work according to a revised and approved design.

Cut apart and re-weld improperly fitted or misaligned parts.

Straighten members distorted by the heat of welding using mechanical means or the carefully supervised application of a limited amount of localized heat. Do not let heated areas exceed 1,200°F as measured by temperature-indicating crayons or other approved methods for steel up to 65,000-psi yield strength. Do not let heated areas exceed 1,100°F for higher-strength steels. Keep parts to be heat-straightened substantially free of stress from external forces except when mechanical means are used with the application of heat. Before straightening, submit a straightening procedure for approval.

Correct defective or unsound welds either by removing and replacing the entire weld or as follows:

4.3.8.1. **Excessive Convexity**. Reduce to size by grinding off the excess weld metal, leaving a smooth profile.

4.3.8.2. **Shrinkage Cracks, Cracks in Base Metal, Craters, and Excessive Porosity**. Remove defective portions of base and weld metal down to sound metal, and replace with additional sound weld metal.

4.3.8.3. **Undercut, Undersize, and Excessive Concavity**. Clean and deposit additional weld metal.

4.3.8.4. **Overlap and Incomplete Fusion**. Remove and replace the defective portion of weld.

4.3.8.5. **Slag Inclusions**. Remove the parts of the weld containing slag, and replace them with sound weld metal.

4.3.8.6. **Removal of Base Metal during Welding**. Clean and form full size by depositing additional weld metal using stringer beads.

4.4. **Shear Stud Welding**. Weld shear studs to steel surfaces and perform preproduction and production tests as required in AASHTO/AWS D1.5.

4.5. **Welding Reinforcing Steel**. Splice reinforcing steel by welding only at locations shown on the Design Documents.

4.5.1. **Base Metal**. Provide weldable reinforcing steel in conformance with Item 440, “Reinforcement for Concrete.”

4.5.2. **Preheat and Interpass Temperature**. Minimum preheat and interpass temperatures are shown in Table 5. Preheat reinforcing steel when it is below the listed temperature for the size and carbon equivalency range of the bar being welded so that the cross-section of the bar is above the minimum temperature for at least 6 in. on each side of the joint. Allow bars to cool naturally to ambient temperature after welding is complete. Do not accelerate cooling.

Table 5

Minimum Preheat and Interpass Temperature for Reinforcing Steel

• **Carbon Equivalent Range (%)**	• **Size of Reinforcing Bar (no.)**	• **Temperature (°F)**
Up to and including 0.40	Up to 11 inclusive	None
	14 and 18	50
0.41 through 0.45 inclusive	Up to 11 inclusive	None
	14 and 18	100
0.46 through 0.55 inclusive	Up to 6 inclusive	None
	7 to 11 inclusive	50
	14 and 18	200
Unknown	Up to 18 inclusive	500

Base the preheat and interpass temperatures for widening projects on the existing reinforcing steel and the requirements of Table 5.

4.5.3. **Joint Types**. Use butt splices for all No. 7 and larger bars. Use lap splices for No. 6 and smaller bars.

Make groove welds in lap splices at least 4 in. long, and weld them on each side of the lap joint as shown in Figure 7.

Make all butt splices in the flat position. Make all welds for butt splices, except horizontal welds on vertical bars, as shown in Figures 8 and 9. The back-up strip is required when access to the splice is from the top only. When bars can be rotated or access to the splice is available from two sides, the double bevel splice may be used, and this type weld requires gouging out the root pass similar to a flange splice on structural steel. The root pass may be made using E7010 or E8010 electrodes for all double beveled splices. Preheat the steel to 400°F, if using E7010 or E8010 electrodes, and then completely remove the root pass before welding the opposite side. Make horizontal splices on vertical bars as shown in Figure 10. Provide alignment strips as shown in Figures 9 and 10 to hold bars during welding operation. Trim alignment strips after welding is complete.

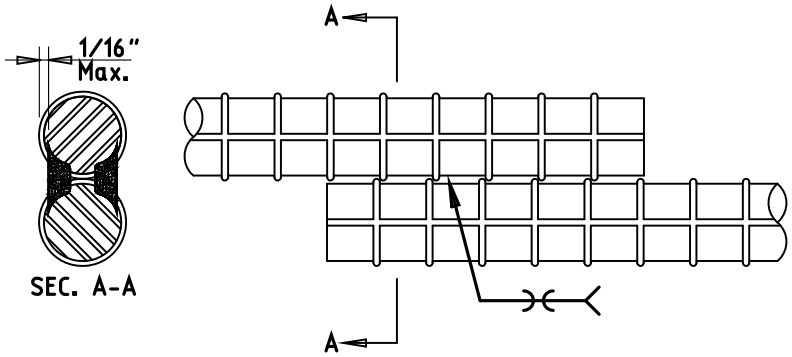

Figure 7

Direct lap joint with bars in contact.

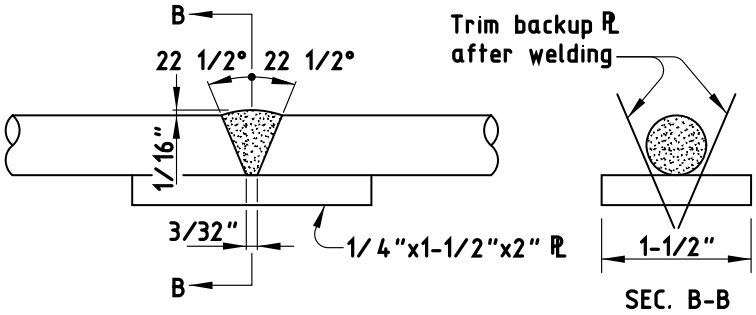

Figure 8

Single bevel V-groove weld in horizontal position.

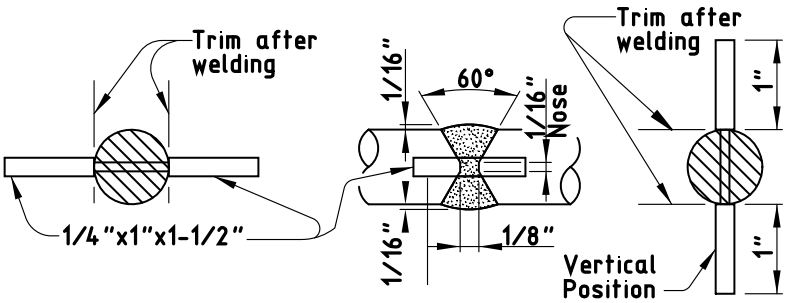

Figure 9

Double bevel V-groove weld in horizontal position.

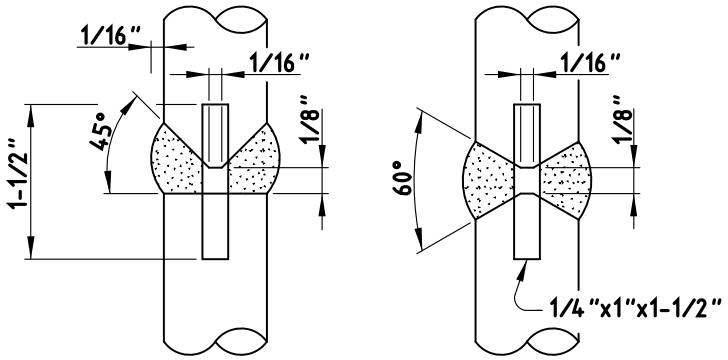

Figure 10

Double bevel V-groove weld in vertical position.

4.5.4. **Radiographic Inspection**. Radiograph welded butt splices when designated on the Design Documents. Follow all applicable rules and regulations for radiographic operations. Ensure welds have no cracks and that the sum of the greatest dimensions of porosity and fusion-type defects do not exceed 1/10 of the nominal bar diameter. Radiographs shall become the property of TxDOT.

Item 449

34. Anchor Bolts

1. DESCRIPTION

Fabricate and install anchor bolts to be embedded in or attached to concrete. Anchor bolts are also referred as anchor rods.

2. MATERIALS

2.1. **Bolts and Nuts. Provide bolts and nuts that meet the standards given in Table 1.**

Table 1

Bolt and Nut Standards

Specified Anchor Bolt Category	Bolt Standards	Nut Standards
Mild steel	ASTM A307 Gr. A, F1554 Gr. 36, or A36	ASTM A563
Medium-strength, mild steel	ASTM F1554 Gr. 55 with supplementary requirement S1	ASTM A194 Gr. 2 or A563 Gr. D or better
High-strength steel	ASTM A325 or A449[1]	ASTM A194 or A563, heavy hex
Alloy steel	ASTM A193 Gr. B7 or F1554 Gr. 105	ASTM A194 Gr. 2H or A563 Gr. DH, heavy hex

If headed bolts are specified, ASTM A449 bolts must be heavy hex head.

Provide a mill test report or manufacturer's certification indicating the material conforms to these requirements. Provide a test report or certification attesting to the heat-treating process for alloy steel anchor bolts if applicable. Provide mild steel anchor bolts and nuts that meet the standards given in Table 1 if no specific bolt category is indicated on the Design Documents.

2.2. **Washers**. Use washers that meet ASTM F436.

2.3. **Threads.** Provide anchor bolts with rolled or cut threads of UNC or 8UN series in accordance with ASME B1.1. Anchor bolts 1-3/4 in. in diameter and larger must have UNC series threads. Ensure the diameter of the unthreaded portion (of bolts with rolled threads) is neither less than the minimum pitch diameter nor more than the maximum major diameter of the threads. Ensure the diameter of the unthreaded portion (of bolts with cut threads) is not less than the minimum major diameter of the threads. Ensure all threads for bolts and nuts have Class 2 fit tolerances in accordance with ASME B1.1.

3. CONSTRUCTION

3.1. **Fabrication.** Welded splicing of anchor bolts is not permitted.

Provide an anchorage device with each anchor bolt consisting of a standard bolt head, a threaded bolt with nuts, or, if shown on the Design Documents, a 90° bend. Make the inside-bend diameter approximately 2 times the anchor bolt diameter, but at no point along the bend greater than 3 times the bolt diameter. Hot bending is permissible provided the temperature does not exceed 1,100°F.

Tack weld the anchorage nuts to the template in the shop if the anchor bolts will be installed in a template embedded in concrete. Perform this welding with appropriate jigs to ensure the anchor bolt is perpendicular to the template.

Weld only on the nut face at the unstressed end of the bolt when embedded templates are not specified and nuts are welded to the end of anchor bolts for anchorage. Ensure no welding, arc, or other potential notch-producing effects occur in the stressed portion of the bolt.

Shipping of the anchor bolt cage in its assembled condition is not required.

3.2. **Finish.** Galvanize in accordance with Item 445, "Galvanizing."

3.2.1. **Anchor Bolts Embedded in Concrete**. Galvanize the exposed end of the thread length plus a minimum of 6 in..

3.2.2. **Anchor Bolts Extending Through Concrete**. Galvanize the complete length of the bolt.

3.2.3. **Nuts**. Galvanize exposed nuts. Galvanize the untapped blanks before cutting the threads.

3.2.4. **Washers**. Galvanize exposed washers.

3.3. **Installation**. Hold the anchor bolt and template assembly rigidly in position during concrete placement. Use wood templates or other positive means to ensure correct positioning of anchor bolts not requiring steel templates. Positioning devices may be tack welded to the steel templates but not to any portion of the anchor bolts.

3.3.1. **Anchor Bolt Thread Lubricant Coating**. Coat anchor bolt threads before installing nuts with an electrically conducting lubricant compound described in Section 449.3.3.2.1., "Definitions," for traffic signal poles, roadway illumination poles, high mast illumination poles, and overhead sign support structures. Coat anchor bolt threads for other structures with pipe joint compound or beeswax. Repair galvanizing damage on bolts, nuts, and washers after installing nuts in accordance with Section 445.3.5., "Repairs."

3.3.2. **Anchor Bolt Tightening Procedure**. Tighten anchor bolts for traffic signal poles, shoe base and concrete traffic barrier base roadway illumination poles, high mast illumination poles, and overhead sign support structures in accordance with this Section. This procedure covers the tightening of nuts on a double-nut anchor bolt system using anchor bolts with 55 ksi or 105 ksi minimum yield strength and UNC or 8UN thread series to secure structures to drilled shaft foundations.

3.3.2.1. **Definitions**. The following definitions apply to the anchor bolt tightening procedure:

- **Double-nut anchor bolt system.** An anchor bolt with 2 nuts that sandwich the structure's base plate. The bottom nut is positioned under the base plate to level, support, and provide the reaction for the force applied by tightening the top nut positioned above the base plate.
- **Electrically conducting lubricant.** A compound commonly used in the electrical industry to coat threads of field-cut rigid metal conduit and suitable for exposure to weather.
- **Impact tightening.** The tightening of nuts with a box end "slug" or "knocker" wrench and a sledgehammer. The wrench, matching the size of the nut to be tightened, is driven with the sledgehammer to rotate the nut.
- **Static tightening.** The tightening of nuts with a "spud" wrench and a pipe or extension handle. The wrench, matching the size of the nut to be tightened, may be turned with more than one worker to rotate the nut.
- **Snug-tight.** The condition when the nut is in full contact with the base plate. It may be assumed the full effort of a worker on a 12-in. wrench results in a snug-tight condition.
- **Turn-of-the-nut method.** The tightening of top nuts to snug-tight condition then establishing reference positions by marking one flat on each nut with a corresponding reference mark on the base plate at each bolt. Each nut is then turned to the prescribed rotation from the referenced snug-tight position.

3.3.2.2. **Anchor Bolt Tightening**. Perform the following procedure:

- Coat the threads of the anchor bolts with electrically conducting lubricant.
- Install the bottom nuts on the bolts, 1 on each bolt.
- Level the top template (using it as a guide) by adjusting the bottom nuts so the template rests on each nut and the distance between the top of the concrete shaft and the bottom surface of the bottom nut is approximately 1/2 in.
- Remove the template.
- Coat the bearing surfaces of the bottom nuts and washers with electrically conducting lubricant.
- Install bottom washers on bolts, 1 on each bolt.
- Erect and plumb the structure as specified. Adjust the bottom nuts so each is bearing equally on the washer or base plate. The truss for cantilever overhead sign support structures and the mast arm for traffic signal poles must be removed during anchor bolt tightening.
- Coat the bearing surfaces of the top nuts and washers with electrically conducting lubricant while the plumbed structure is supported by a crane. Install 1 washer and 1 top nut on each bolt. Turn the top nuts onto the bolts so each is hand-tight against the washer or base plate.
- Turn each bottom nut to a snug-tight condition using a wrench.
- Verify the structure is still plumb and still supported by the crane. Begin turn-of-the-nut method by turning each top nut down to the same snug-tight condition. Prevent rotation of the bottom leveling nut during all top nut tightening. Establish reference marks for turn-of-the-nut method once snug-tight condition is achieved, and then tighten the top nuts by turning each nut 1/12 turn (1/2 of a nut flat) past snug-tight using either static or impact tightening. Turn each top nut an additional 1/12 turn until each nut has been tightened 1/6 total turn past snug-tight.

Item 450

35. Railing

1. DESCRIPTION

Construct railing of concrete, steel, aluminum, or a combination of these materials, including necessary anchorage for the railing on bridges, culverts, walls, or other structures as shown on the Design Documents.

2. MATERIALS

Use materials that conform to requirements of the following Items.

- Item 421, “Hydraulic Cement Concrete”
- Item 440, “Reinforcement for Concrete”
- Item 441, “Steel Structures”
- Item 442, “Metal for Structures”
- Item 445, “Galvanizing”

Provide an approved Type III, Class C epoxy or an epoxy of the type and class stated on the Design Documents where epoxy anchors are allowed or required for installing drilled and epoxied rail anchorage reinforcement or rail anchor bolts in accordance with DMS-6100, “Epoxies and Adhesives.” Use other materials if shown on the Design Documents. Provide only dual cartridge epoxy systems mixed with a static mixing nozzle supplied by the epoxy adhesive manufacturer and dispensed with a tool supplied by the epoxy adhesive manufacturer. Do not use bulk epoxies. Drill and install anchorage reinforcement or anchor bolts to the embedment depth shown on the Design Documents or the depth the manufacturer recommends, whichever is deeper. Select an embedment depth capable of developing the yield strength of the steel anchor based on the product literature for the epoxy and steel anchor being used if no resistance or embedment depth is specified on the Design Documents. Use 60 ksi as the yield strength for reinforcing steel.

3. CONSTRUCTION

Construct railing in accordance with details, alignment, and grade designated on the Design Documents. Do not place railing until falsework or formwork, if any, for the span has been released. Adhere to the schedule restrictions for Placing Bridge Rails and Opening to Construction Traffic in Item 422, “Concrete Superstructures.” Obtain approval of Work before proceeding to the next step: placing rail reinforcement; pre-pour clear cover checks.

Ensure expansion joints in the railing will function properly prior to placing concrete.

Furnish either steel or aluminum, but not both, for the entire Contract if the Design Documents allow either steel or aluminum options for a particular railing type.

Install epoxy adhesive anchorages in accordance with the manufacturer's instructions including hole size, drilling equipment and method, hole cleaning equipment and method, mixing and dispensing epoxy, and anchor insertion. Do not alter the manufacturer's mixing nozzle or dispenser. Anchorage bars or bolts must be clean and free of grease, oil, or any other foreign material. Demonstrate hole cleaning method for approval and continue the approved process for all anchorage locations. Do not weld to an anchor bar or anchor bolt that is anchored with epoxy adhesive. Do not expose rail to traffic until epoxy adhesive has obtained full cure in accordance with manufacturer's specifications.

3.1. **Metal Railing**.

3.1.1. **General**. Fabricate and erect metal railing according to the pertinent provisions of Item 441, "Steel Structures," and the requirements of this Item.

Prepare and submit for approval the required shop or erection drawings in accordance with Item 441, "Steel Structures," when the Design Documents require. Show all splice locations and details on the shop or erection drawings. Splice members only as provided on the Design Documents.

Field-weld when required in accordance with Item 448, "Structural Field Welding."

3.1.2. **Fabrication**. Fabricate metal railing and post panels in sections conforming to the details shown on the Design Documents and field-verified lines and grades. Fabricate adjacent sections so they will accurately engage each other in the field. Match-mark each pair of sections so they can be erected in the same position they were fabricated.

Fabricate metal rail Elements included as part of the railing system to the dimensions and cross-sections shown on the Design Documents and within a tolerance of 1/4 in. per 10 feet in the straightness of either edge. Joint and connect metal rail Elements to the rail posts as shown on the Design Documents, lapping metal rail Elements in the direction of traffic in the adjacent lane. Bolts and nuts for metal railing should meet requirements of ASTM A307 and be galvanized in accordance with Item 445, "Galvanizing."

Fabricate aluminum in accordance with AWS D1.2.

Heat aluminum materials other than castings to a temperature up to 400°F for no more than 30 min. to facilitate bending or straightening.

3.1.3. **Castings**. Provide permanent mold castings of the materials specified that are true to pattern in form and dimensions and of uniform quality and condition. Castings must be free from cracks and defects such as blowholes, porosity, hard-spots, or shrinkage that could affect their suitability for use. Repair minor defects in aluminum castings by an approved inert gas-welding process. Ensure finished castings are free of burrs, fins, discoloration, and mold marks and that they have a uniform appearance and texture.

Produce castings under radiographic control sufficient to establish and verify a product free from harmful internal defects. Heat-treat the entire lot of castings to the specified temper when required.

Permanently mark the heat or lot number on the web or top of the base of all castings. Furnish mill test reports showing the heat or lot number, chemical composition, tensile strength, elongation, and number of pieces for each casting heat or lot. For aluminum castings, a heat or lot should consist of at least 1,000 lb. of trimmed castings when produced from batch type furnaces, or 2,000 lb. when produced from a continuous furnace during a period of no more than 8 consecutive hours. Furnish the entire number of acceptable posts cast from each heat or lot except when a portion is required to complete a project.

3.1.4. **Corrosion Protection**. Provide protective coating for all metal railing. Galvanize all portions of steel railing after fabrication in accordance with Item 445, "Galvanizing." Provide the paint system shown on the Design Documents when specified on the Design Documents. Apply paint in accordance with either Item 441, "Steel Structures," for non-galvanized railing or Item 445, "Galvanizing," for painted, galvanized railing. Repair any damaged galvanizing after erection in accordance with Item 445, "Galvanizing."

Aluminum railing and galvanized steel railing do not require field painting. Clean extrusion marks, grease, and dirt from the railing before final acceptance.

3.1.5. **Storage**. Store railing materials above the ground on platforms, skids, or other supports, and keep them free from grease, dirt, and contact with dissimilar metals. Avoid scratching, marring, denting, discoloring, or otherwise damaging the railing.

3.2. **Concrete Railing**. Provide concrete portions of railing in accordance with the requirements of Item 420, "Concrete Substructures," and Item 422, "Concrete Superstructures." Construct forms so the railing line and grade can be checked after the concrete has been placed but before initial set. Do not disturb the form alignment during finish floating of the railing tops. Exercise particular care in other construction to avoid disturbing or vibrating the span with the newly placed railing.

Provide precast members conforming to Item 424, "Precast Concrete Structures (Fabrication)."

Slipform construction of railing is permitted. Demonstrate slipforming method showing line and grade of concrete surfaces can be consistently obtained and clear cover outside reinforcing steel be maintained at all times. Stop slipforming railing if specified concrete clear cover is not obtained or appearance of rail is off line and grade.

Do not slipform railing with cast-in-place anchor bolts.

Provide additional reinforcing as needed to prevent movement of the reinforcement cage. Clear cover and epoxy coating requirements for additional reinforcement are the same as shown for the rail reinforcement. The rail reinforcing cage may be tack welded to the rail anchorage reinforcement provided the rail and anchorage reinforcement are not epoxy coated and weld locations measured along the rail are no closer than 3 ft. Tie all bar intersections if epoxy coated reinforcement is required for the railing proposed to be slipformed. Provide a wire line to maintain vertical and horizontal alignment of the slipform machine. Attach a grade line gauge or pointer to the machine so a continuous comparison can be made between the rail being placed and the established grade line. Rails or supports at the required grade are allowed instead of sensor controls. Make one or more passes with the slipform over the rail segment to ensure proper operation and maintenance of grades and clearances before placing concrete. Provide slipformed rail within a vertical and horizontal alignment tolerance of ±1/4 in. per 10 feet. Construct rail with a smooth and uniform appearance. Consolidate concrete so it is free of

honeycomb. Provide concrete with a consistency that will maintain the shape of the rail without support. Minimize starting and stopping of the slipform operation by ensuring a continuous supply of concrete.

Do not exceed the manufacturer's recommended speed for the slipform machine. Stop slipforming and take remedial action if slipforming causes movement of the reinforcement such that plan clearances are not achieved. Remove and replace unsatisfactory slipformed rail.

Form cure, membrane cure, or water cure concrete for 4 consecutive Days. Apply curing immediately following finishing operations for slipform railing or utilize an evaporation retardant to keep concrete from drying out, as approved.

3.3. **Tests**. Sample cast aluminum posts for testing in accordance with Tex-731-I to verify the material requirements of Item 442, "Metal for Structures." Metal beam rail Elements may be sampled in accordance with Tex-713-I. TxDOT may sample bolts and nuts in accordance with Tex-708-I for galvanized coating testing.

Select three anchor bars or bolts from the first day's production to be tested after the epoxy has cured. Test the bars or bolts in the presence of TxDOT in accordance with ASTM E1512, using a restrained test, to evaluate the epoxy adhesive's bond strength. Verify the anchor bars or bolts develop the required pullout resistance on the Design Documents or 75% of the yield strength of the bars or bolts, whichever is less, without a bond failure of the epoxy. Perform corrective measures to provide adequate capacity if any of the tests do not meet the required test load. Repair damage from testing.

Item 451

36. Retrofit Railing

1. DESCRIPTION

Retrofit or replace railing.

2. MATERIALS

Use materials that conform to requirements of the following Items.

- Item 421, “Hydraulic Cement Concrete”
- Item 440, “Reinforcement for Concrete”
- Item 441, “Steel Structures”
- Item 442, “Metal for Structures”
- Item 445, “Galvanizing”

3. CONSTRUCTION

Remove existing railing to the lines and grades shown on the Design Documents. Do not damage any portion of the structure that is to remain in place. Replace any concrete removed beyond the neat lines or other established lines. Remove bolts to disassemble steel members. Incorporate reinforcing steel into the new concrete railing with at least 1-1/2 in. of clear cover if indicated on the Design Documents. Cut off existing reinforcing steel at least 1 in. below the finished surface of the concrete if it cannot be reused as dowels. Repair any concrete damaged from making the cut-off. Refinish the top of the concrete slab where the railing is removed, but not replaced to leave a neat surface as specified on the Design Documents and in accordance with Item 429, “Concrete Structure Repair.”

Dispose of removed material off the right of way in accordance with federal, State, and local regulations. Carefully dismantle rail by unbolting steel members when Design Documents specify to salvage rail members. Deliver materials to be retained by TxDOT to the location shown on the Design Documents. Block up salvaged steel materials off the ground.

Construct replacement railing in accordance with Item 450, “Railing.”

Item 454

37. Bridge Expansion Joints

1. DESCRIPTION

Furnish and install bridge expansion joints.

2. MATERIALS

Provide materials in accordance with the requirements of the following Items.

Item 442, "Metal for Structures"
DMS-6140, "Polymer Concrete for Bridge Joint Systems"
DMS-6310, "Joint Sealants and Fillers"
ASTM D5973

Use primers recommended by the manufacturer of the sealant when required. Use backer rods compatible with the sealant that do not react or bond together.

3. CONSTRUCTION

Place expansion joints to conform to the finished grade of the roadway surface. Set the joint opening at the dimension shown on the Design Documents for 70°F, adjusted for the temperature at the time of installation. Place the seal for the full length of the joint for sealed joint openings and, when required, extend it into the parapet wall on the low side or sides of the bridge.

3.1. **Sealed Expansion Joint (SEJ).** Choose an approved joint system that conforms to the joint type and the design requirements shown on the Design Documents. Secure each side of the joint by welding it to the adjacent reinforcing steel or other attachments as approved. Remove any connection holding the joint halves together immediately after each joint half is secured in place. Install the neoprene seal as a continuous piece to form a watertight seal.

3.2. **Armor Joint**. Place steel armor plates as shown on the Design Documents. Secure each side of the joint by welding it to adjacent reinforcing steel or other attachments as approved. Remove any connection holding joint halves together immediately after each joint half is secured in place.

Seal the joint when specified. Abrasive blast clean the vertical faces of the steel plates where the sealant will be in contact to remove all visible rust, paint, mill scale, and other forms of contamination, leaving a white metal appearance. Clean the concrete in contact with the sealant by an approved method in accordance with the manufacturer's specifications before placing sealant. After cleaning, air blast the joint to remove all dust. Place sealant in accordance with the manufacturer's specifications and as shown on the Design Documents. Repair damage to paint protection system above the seal when shown on the Design Documents for steel armor plates to be painted.

3.3. **Header-Type Expansion Joint**. Meet with the manufacturer's representative to discuss the required installation procedures of the materials before beginning the Work. Perform the Work in accordance with the

manufacturer's printed instructions and as discussed in the meeting. Additionally, TxDOT may request the presence of the manufacturer's representative for additional training if work personnel are not adequately following manufacturer's installation directions.

3.3.1. **Header**. Provide an approved polymer concrete from DMS-6140, "Polymer Concrete for Header Joint Systems." Create the required void in the concrete surface or asphalt overlay to accept the header material in accordance with the details shown on the Design Documents. Extend the depth of the void in the asphalt overlay to sound concrete. Remove any unsound steel or concrete and repair concrete in accordance with Item 429, "Concrete Structure Repair." Use header material as repair material only when approved. Clean the voided region of all materials that could inhibit the bond between the header material and concrete or steel. Form the joint opening to the required width shown on the Design Documents.

Place materials once approved. Place material on a clean, sound, and dry base when the ambient temperature is at least 45°F and rising or as required by the manufacturer. Do not place material on wet substrate or when raining.

Cure for the duration required by the manufacturer's data sheets before opening to traffic.

Tool or grind the upper corner of the header adjacent to the opening to a 1/4-in. radius.

3.3.2. **Sealant**. Provide an approved Class 1 or Class 7 joint sealant from DMS-6300, "Joint Sealants and Fillers." Clean the joint opening of forming material, existing seal, and other material that will inhibit the bond between the header material and the sealant. Abrasive blast clean surfaces in contact with the sealant. Place an approved backer rod and the sealant as shown on the Design Documents. Place sealant primer and sealant when ambient temperature is rising and is between 55°F and 85°F to provide for adequate joint opening and compression of the sealant during curing.

Item 458

38. Waterproofing Membranes for Structures

1. DESCRIPTION

Furnish and place waterproofing membranes on concrete and steel bridge decks of railroad and other types of structures.

2. MATERIALS

2.1. **Materials to be Furnished**. Furnish waterproofing materials listed below in accordance with DMS-6300, "Waterproofing":

- asphalt for mopping above ground,
- asphalt for mopping below ground,
- asphaltic primer,
- treated cotton fabric,
- self-adhering polyethylene,
- coal-tar-modified urethane,
- rubberized asphalt with preformed board membrane,
- asphalt plank,
- asphalt mat,
- rubberized asphalt with plastic film,
- asphaltic panels,
- plastic cement, and
- cold asphalt base emulsion.

Furnish butyl rubber membrane and ethylene-propylene-diene terpolymer (EPDM) sheeting in accordance with ASTM D6134.

Deliver materials requiring sampling and testing to the worksite a minimum of 3 weeks before use. Test and obtain approval for waterproofing materials before delivery to the worksite when authorized.

2.2. **Types**. Provide the following types of waterproofing as shown on the Design Documents.

2.2.1. **Type 1**. Butyl rubber membrane applied to a surface with a proper adhesive without protective planking and in accordance with the details shown on the Design Documents. Provide a minimum thickness of 1/16 in.

2.2.2. **Type 2**. A single asphaltic primer coat and 1 mopping of asphalt.

2.2.3. **Type 3**. A single asphaltic primer coat and 2 moppings of asphalt. Supplement with 2 layers of treated cotton fabric with a third mopping of asphalt placed over the outer layer of fabric at construction joints of foundation structures when shown on the Design Documents.

2.2.4. **Type 4**. Self-adhering polyethylene with a rubberized asphalt mastic material.

2.2.5. **Type 5**. Single-component, coal-tar-modified urethane coating.

2.2.6. **Type 6**. Self-adhering built-up membrane of rubberized asphalt formed on a preformed board with cold-applied asphaltic primer.

2.2.7. **Type 10**. Any of Type 1, Type 4, Type 5, or Type 6 waterproofing.

2.2.8. **Type RR-1**. Butyl rubber or EPDM membrane with a protective course of asphalt plank or asphalt mat of the specified thickness, as specified on the Design Documents.

3. CONSTRUCTION

3.1. **General**. Store waterproofing material in a manner that will prevent damage. Keep material dry at all times, and store in a warm area before using in cold weather and out of direct sunlight in hot weather. Store asphalt planks, asphalt mats, and asphaltic panels in a manner that will prevent warping and breaking.

Provide a wood float finish to concrete decks and other unformed concrete surfaces to be waterproofed. Cure concrete surfaces to be waterproofed for at least 7 Days before applying waterproofing, by the waterproofing materials manufacturers.

Ensure steel or concrete deck surfaces to be waterproofed are clean, dry, smooth, and free of fins, sharp edges, and loose material. Use grinders, if necessary, to remove protrusions that would puncture waterproofing membrane. Ensure surfaces are free of contaminants such as form-release agents, wax base curing compounds, oil, and grease. Remove any contaminants by abrasive blast cleaning. Ensure there are no depressions or pockets in horizontal surfaces of finished waterproofing.

Fill expansion joints and other grooves with plastic cement conforming to the requirements of DMS-6300, “Waterproofing.” Ensure joints are dry and clean when filled. Overfill slightly to allow for shrinkage in drying.

Sweep, vacuum, or air-blow the area to be waterproofed thoroughly to remove dust, dirt, and loose foreign material. Maintain the deck in a clean condition until completion of waterproofing.

Do not allow vehicular or equipment traffic on the bridge after the deck waterproofing Work has started or until after the Work is complete, cover sheets are in place, and an adequate ballast cushion has been placed on the deck. Protect the waterproofing against damage from any source.

Use asphalt for mopping below ground as defined in DMS-6300, “Waterproofing,” when asphalt waterproofing is shown as a protection for back of abutments, retaining walls, or footings. Use asphalt for mopping above ground as defined in DMS-6300, “Waterproofing,” for waterproofing on bridge decks.

3.2. **Type 1**. Do not apply waterproofing in wet weather or when the ambient temperature is below 50°F. Ensure the rubber membrane is free from punctures, pockets, or folds.

Turn the membrane into drainage holes and castings without break. Take special care to make the waterproofing effective along the sides and ends of members to be waterproofed.

Install the butyl rubber membrane by first applying the adhesive as recommended by the membrane manufacturer. Apply the adhesive to the surface to be waterproofed and at necessary splices, in a solid area extending approximately 36 in. back from the edges. Apply the membrane by pressing it firmly and uniformly in place against the previously applied adhesive, avoiding wrinkles and buckles. Make splices, laps, and flashing in accordance with the membrane manufacturer's recommended procedures.

3.3. **Type 2**. Place the asphalt primer at least 24 hr. before the asphalt mopping. Ensure the primer is dry before the mopping. Work in the primer to give a uniform coating. Heat the asphalt for mopping in kettles equipped with armored thermometers, but do not heat above 350°F. Stir the asphalt frequently while heating. Apply the mop coating at a rate of at least 4 gal. per 100 square feet of surface. Apply additional coatings, if imperfections appear, until corrected.

3.4. **Type 3**. Place the asphalt primer at least 24 hr. before the asphalt mopping. Ensure the primer is dry before the mopping. Work in the primer to give a uniform coating. Heat the asphalt for mopping in kettles equipped with armored thermometers, but do not heat above 350°F. Stir the asphalt frequently while heating. Use a minimum coverage rate for each mop coating of 4 gal. per 100 square feet of surface. Apply additional coatings, if imperfections appear, until corrected.

Mop the surfaces to be waterproofed in sections at construction joints. Lay a 15-in. wide strip of cotton fabric on the first mopping while the asphalt is still hot and press into place. Apply subsequent moppings to completely cover and seal the cotton fabric. Make the end laps of the cotton fabric at least 12 in.

3.5. **Type 4**. Unwrap the roll of waterproofing and press the adhesive surface into contact with the concrete horizontally. Secure the free end and then unroll slowly, using hand pressure to smooth the membrane into place and help make a tight bond with the concrete. Overlap adjacent strips a minimum of 1 in. over the previously laid strip. Backfilling may be started as soon as the initial horizontal strip has been applied.

3.6. **Type 5**. Apply waterproofing in 2 coats to produce a minimum cured film thickness of 1/16 in. Apply using a roller, squeegee, brush, or spray equipment. Apply the second coat within 16 hr. after the initial coat. Follow the manufacturer’s instructions with regard to the maximum time allowed between coats and any treatment of the initial coat required if this maximum time is exceeded. The minimum ambient temperature at the time of waterproofing application is 40°F. Do not begin backfilling until the second coat of waterproofing has cured sufficiently to prevent damage by the backfilling operation.

3.7. **Type 6**. Apply the primer at a rate of 1 gal. per 100 square feet of surface or at the rate recommended by the manufacturer if different. Allow to dry to a tacky surface before placing the waterproofing membrane. Apply the primer and waterproofing membrane board panels only when the substrate temperature is above 50°F.

Seal joints by centering 6-in. gusset tape over the joint and pressing firmly into position. Roll in the panels and jointing tape with sufficient pressure to assure maximum adhesion, conformance to substrate, and elimination of air bubbles. Follow the manufacturer’s recommendations for installation.

Begin backfilling as soon as the application of the waterproofing is complete. Complete backfilling within 48 hr. after the waterproofing material is applied to a non-horizontal surface.

3.8. **Type RR-1**. Apply waterproofing to dry surfaces and only when the ambient temperature is above 50°F. Ensure the butyl rubber or EPDM membrane is free from punctures, pockets, or folds. Turn the membrane into

drainage castings without break. Take special care to make the waterproofing effective along the sides and ends of girders and at stiffeners, gussets, etc. Fill grooves with plastic cement.

Install the butyl rubber or EPDM membrane by first applying the adhesive as recommended by the membrane manufacturer to ballast retainers, ends of deck, and at necessary splices in a solid area extending from the edges back about 36 in. Apply the membrane and press it firmly and uniformly in place against the previously applied adhesive, avoiding wrinkles and buckles. Make splices, laps, and flashing in accordance with the membrane manufacturer's recommended procedures.

Place the protective cover as soon as practicable after placement of the membrane. Clean the membrane surface of dirt and other foreign material before placing the cover material. Apply a coating of cold asphalt emulsion over the membrane at a minimum rate of 4 gal. per 100 square feet of surface. Place the asphalt plank or mat on the coating of cold asphalt emulsion.

Provide a minimum thickness of protection of 1 in., consisting of asphalt plank or asphalt mat. Coat the edges and ends of adjacent planks already laid with cold asphalt emulsion as successive planks are laid. Lay the planks tightly against those previously laid so the emulsion will completely fill the joints and be squeezed out the top. Fill any joints not completely full after planks have been laid with emulsion. Offset the vertical joints of the second layer at least 4 in. transversely and 1 ft. longitudinally from the joints in the lower layer when 2 layers of planks are used to obtain the required 1-in. cover thickness.

Apply asphalt mat protection in the same manner except stagger the longitudinal butt joints in a single layer by approximately 2 ft. Follow the same procedure with all vertical joints offset by at least 1 ft. when more than 1 thickness of asphalt mat is required Place a follow-up coating of asphalt emulsion approximately 6 in. wide over all joints of the top layer.

Use asphalt for mopping above ground as defined in DMS-6300, “Waterproofing,” where deck waterproofing is carried over the back wall and down the back of the abutment for only several feet to provide a proper flashing for the deck waterproofing.

Item 459

39. Gabions and Gabion Mattresses

1. DESCRIPTION

Furnish and install gabions and gabion mattresses.

2. MATERIALS

This Item uses the following Items:

Gabion. A wire fabric or mesh container, filled with stone, with a height of 1 ft. or greater.

Gabion Mattress. A wire fabric or mesh container filled with stone and with a height of 6, 9, or 12 in. Referred to as "revet mattress" in ASTM A975.

Furnish welded wire gabions and gabion mattresses in accordance with ASTM A974. Furnish Style 1 or 2 when galvanized wire coating is specified or Style 5 when PVC wire coating is specified.

Furnish twisted wire gabions and gabion mattresses in accordance with ASTM A975. Furnish Style 1 when galvanized wire coating is specified or Style 3 when PVC wire coating is specified.

Furnish producer or Supplier certification that wire baskets, stiffeners, lacing wire, and spiral connectors conform to the applicable ASTM specification.

Furnish producer or Supplier certification that any alternative wire fasteners that are proposed conform to the strength requirements in Table 1 when tested in accordance with the applicable ASTM specification. Submit certification for approval before beginning Work.

Table 1

Minimum Panel-to-Panel Connection Strength

Application	Strength (lb./ft.)
Gabions, galvanized	1,400
Gabions, PVC-coated	1,200
Gabion mattress, galvanized and PVC-coated	700

Provide filler stone consisting of clean, hard, durable stone that does not contain shale, caliche, or other soft particles. Stone appearing to contain such particles shall be tested for soundness. Stone with 5-cycle magnesium sulfate soundness of more than 18% when tested in accordance with Tex-411-A shall be rejected. Use stones that are between 4 and 8 in. in their least dimension for gabions and between 3 and 6 in. for gabion mattresses. Prevent contamination when storing and handling stone. Use stone with a minimum bulk specific gravity of 2.50 as determined by Tex-403-A.

Provide Type 2 filter fabric when required in accordance with DMS-6200, “Filter Fabric.”

Provide filter material when required consisting of hard, durable, clean sand or gravel with a maximum particle size of 3/8 in.

3. CONSTRUCTION

At the start of construction, the gabion and gabion mattress manufacturer must have a qualified representative available for consultation as needed throughout the gabion and gabion mattress construction.

3.1. **Foundation Preparation**. Excavate the foundation to the extent shown on the Design Documents. Remove all loose or otherwise unsuitable materials. Carefully backfill all depressions to grade with suitable materials from adjacent required excavation or another approved source, and compact the backfill to a density at least equal to the adjacent foundation. Remove any buried debris protruding from the foundation that will impede the proper installation and final appearance of the gabion or gabion mattress, and carefully backfill and compact voids as specified above. Inspect the prepared foundation surface immediately before gabion placement.

3.2. **Filter Placement**. Spread filter material, when required, uniformly on the prepared foundation surface to the slopes, lines, and grades indicated on the Design Documents. Do not place filter material by methods that tend to segregate particle sizes. Repair all damage to the foundation surface that occurs during filter placement before proceeding with the Work. Compaction of the filter material is not required; but, finish the material to present a reasonably even surface without mounds or windrows.

3.3. **Filter Fabric Placement**. Place filter fabric as shown on the Design Documents when required. Any defects, rips, holes, flaws, or damage to the material may be cause for rejection. Place the material with the long axis parallel to the centerline of the structure, highway, or dam. Place securing pins in the lapped longitudinal joints, spaced on approximately 10-ft. centers. Keep the fabric material free of tension, stress, folds, wrinkles, or creases. Lap the material at least 3 ft. along the longitudinal joint of material, or lap the joints 1 ft. and sew them. Lap the ends of rolls at joints by at least 3 ft. Repair torn or punctured fabric by placing a layer of fabric over the damaged area, overlapping at least 3 ft. beyond the damaged area in all directions.

Place securing pins through both strips of material at lapped joints at approximately the midpoint of the overlap. Place additional securing pins as necessary to hold filter fabric in position. Store filter fabric out of direct sunlight. Cover filter fabric as soon as possible after placing, but within 3 Days.

3.4. **Assembly and Installation**. Place PVC-coated materials, if wire coating is specified, when the ambient temperature and the temperature of the coated wire are no more than 15°F above the brittleness temperature of the PVC.

Assemble empty gabion or gabion mattress units individually, and place them on the approved surface to the lines and grades shown on the Design Documents with the sides, ends, and diaphragms erected to ensure all creases are in the correct position, the tops of all sides are level, and all sides that are to remain exposed are straight and plumb. Fill the basket units after transporting them to their final position in the Work.

Place the front row of gabion or gabion mattress units first and successively construct units toward the top of the slope or the back of the structure. Place the initial line of basket units on

the prepared surface, and partially fill them to provide anchorage against deformation and displacement during subsequent filling operations. Stretch and hold empty basket units as necessary to remove kinks and provide a uniform alignment. Connect all adjoining empty gabion or gabion mattress units with lacing, wire spiral binders, or approved fasteners along the perimeter of their contact surface to obtain a monolithic structure before filling. Provide continuous stitching with alternating single and double loops at intervals of no more than 5 in. if lacing wire is used. Securely fasten all lacing wire terminals.

Provide connections meeting the joint strength requirements of Article 459.2., “Materials.” These requirements apply to all connections including attachment of end panels, diaphragms, and lids.

Join twisted wire baskets through selvage-to-selvage or selvage-to-edge wire connection; do not use mesh-to-mesh or selvage-to-mesh wire connection except where baskets are offset or stacked, in which case join each mesh opening where mesh wire meets selvage or edge wire.

arefully fill the basket units with stone, using hand placement to avoid damaging wire coating, to ensure as few voids as possible between the stones and to maintain alignment. Machine placement of stone will be allowed if approved. Correct excessive deformation and bulging of the mesh before further filling. Fill the basket units in a row in stages consisting of maximum 12 in. courses to avoid localized deformation. Do not at any time fill a cell to a depth exceeding 1 ft. more than its adjoining cell. Do not drop stones into the basket units from a height greater than 36 in.

Place 2 uniformly spaced internal connecting wires between each stone layer in all front and side gabion units, connecting the back and the front faces of the compartments for gabion units more than 2 ft. high. Loop connecting wires or preformed stiffeners around 2 twisted wire-mesh openings or a welded wire joint at each basket face, and securely twist the wire terminals to prevent loosening.

Place the outer layer of stone carefully along all exposed faces and arrange it by hand to ensure a neat and compact appearance. Overfill the last layer of stone uniformly by 1 to 2 in. for gabions and 1 in. for gabion mattresses to compensate for future settlement in rock while still allowing for the proper closing of the lid and providing an even surface with a uniform appearance. Make final adjustments for compaction and surface tolerance by hand. Stretch lids tight over the stone fill, using an approved lid-closing tool, until the lid meets the perimeter edges of the front and end panels. Do not use crowbars or other single-point leverage bars for lid closing. Close the lid tightly along all edges, ends, and internal-cell diaphragms with spiral binders or lacing wire or with other wire fasteners if approved. Ensure all projections or wire ends are turned into the baskets. Cut, fold, and wire the basket unit together to suit site conditions where a complete gabion or gabion mattress unit cannot be installed because of space limitations, as shown on the Design Documents,. Fold the mesh back and neatly wire it to an adjacent basket face. Complete the assembling, installation, filling, lid closing, and lacing of the reshaped gabion or gabion mattress units in accordance with this Section.

Item 460

40. Corrugated Metal Pipe

1. DESCRIPTION

Furnish and install corrugated metal pipes, materials for constructing corrugated metal pipe culverts, or corrugated metal storm drain mains, laterals, stubs, and inlet leads.

2. MATERIALS

2.1. **Fabrication. Furnish corrugated metal pipe in accordance with Table 1.**

Table 1

Specifications for Corrugated Metal Pipe

Pipe Type	AASHTO Specification
Galvanized steel and aluminized steel	M 36
Aluminized Type 2	M 36
Polymer Coated	M 36 & M 245
Asphalt Coated	M 36
Aluminum	M 196

The pipe type and corresponding AASHTO designations are shown in Table 2.

Table 2

Corrugated Metal Pipe Types

Pipe Type	AASHTO Classification
Circular	Type I
Circular, smooth-lined	Type IA
Circular, spiral rib	Type IR
Arch	Type II
Arch, smooth-lined	Type IIA
Arch, spiral rib	Type IIR

Provide corrugated metal pipe of all types with annular corrugations, helical corrugations, or spiral ribs (corrugations) projecting outward. Provide pipe with helical end corrugations only when necessary to join new pipe to existing pipe with helical end corrugations.

Provide a minimum polymer coating thickness of 10 mils on each side for pre-coated galvanized steel pipe. Sample and test galvanized metal sheets and coils used for galvanized corrugated metal pipe in accordance with Tex-708-I.

Repair damaged galvanized coating in accordance with Section 445.3.5., "Repairs." Repair damaged aluminized or polymer coating in accordance with AASHTO M 36 and M 245 respectively.

2.2. **Protective Coating**. Furnish bituminous coating, when required, that meets AASHTO M 190 and that tightly adheres to the metal, does not chip off in handling, and protects the pipe from deterioration as evidenced by samples prepared from the coating material successfully meeting the Shock Test and Flow Test in accordance with Tex-522-C.

Coat the pipe uniformly inside and out to a minimum thickness of 0.05 in. measured on the crests of the corrugations. Coat the pipe with additional material applied to the full inner circumference to form a smooth inside lining with a minimum thickness of 1/8 in. above the crest of the corrugations when smooth lining is specified.

2.3. **Design**. The diameter, permissible corrugations, and required gauges for full-circle pipe shall be shown. The design size and permissible corrugations for pipe arch shall be shown. The required gauges of the shell and the liner for smooth lined pipe shall also be shown. Furnish the shape and minimum gauge for steel pipe arch in accordance with Tables 3, 4, 5, or 6 for the specified design size and corrugation. Use Table 7 or 8 for aluminum pipe arch. Refer to U.S. Standard Gauge for uncoated sheets where reference is made to gauge of metal.

Measure dimensions from the inside crests of the corrugations. A tolerance of ±1 in. or 2% of the equivalent circular diameter, whichever is greater, is allowed for span and rise.

Table 3
Steel Pipe Arch

2-2/3 × 1/2-in. Corrugations

Design Size	Span (in.)	Rise (in.)	Min. Cover (in.)	Min. Gauge Required	Coated Thickness (in.)	Equivalent Diameter Full-Circle Pipe (in.)
1	17	13	12	16	0.064	15
2	21	15	12	16	0.064	18
2A	23	19	12	16	0.064	21
3	28	20	12	16	0.064	24
4	35	24	12	16	0.064	30
5	42	29	12	14	0.079	36
6	49	33	12	14	0.079	42
7	57	38	12	12	0.109	48
8	64	43	12	12	0.109	54
9	71	47	12	10	0.138	60

Table 4

Steel Pipe Arch

3 × 1-in. Corrugations

Design Size	Span (in.)	Rise (in.)	Min. Cover (in.)	Min. Gauge Required	Coated Thickness (in.)	Equivalent Diameter Full-Circle Pipe (in.)
7	53	41	12	14	0.079	48
8	60	46	12	14	0.079	54
9	66	51	12	14	0.079	60
10	73	55	12	14	0.079	66
11	81	59	12	14	0.079	72
12	87	63	12	14	0.079	78
13	95	67	12	12	0.109	84
14	103	71	18	12	0.109	90
15	112	75	18	12	0.109	96
16	117	79	18	12	0.109	102
17	128	83	24	10	0.138	108
18	137	87	24	10	0.138	114
19	142	91	24	10	0.138	120

Table 5
Steel Pipe Arch

5 × 1-in. Corrugations

Design Size	Span (in.)	Rise (in.)	Min. Cover (in.)	Min. Gauge Required	Coated Thickness (in.)	Equivalent Diameter Full-Circle Pipe (in.)
11	81	59	12	12	0.109	72
12	87	63	12	12	0.109	78
13	95	67	12	12	0.109	84
14	103	71	18	12	0.109	90
15	112	75	18	12	0.109	96
16	117	79	18	12	0.109	102
17	128	83	24	10	0.138	108
18	137	87	24	10	0.138	114
19	142	91	24	10	0.138	120

Table 6
Steel Pipe Arch, Spiral Rib

7-1/2 × 3/4 × 3/4-in. Corrugations

Design Size	Span (in.)	Rise (in.)	Min. Cover (in.)	Min. Gauge Required	Coated Thickness (in.)	Equivalent Diameter Full-Circle Pipe (in.)
2	20	16	12	16	0.064	18
2A	23	19	12	16	0.064	21
3	27	21	12	16	0.064	24
4	33	26	12	16	0.064	30
5	40	31	12	14	0.064	36
6	46	36	12	12	0.064	42
7	53	41	12	12	0.079	48
8	60	46	12	12	0.079	54
9	66	51	15	12	0.079	60

Table 7
Aluminum Pipe Arch
2-2/3 × 1/2-in. Corrugations

Design Size	Span (in.)	Rise (in.)	Min. Cover (in.)	Min. Gauge Required	Coated Thickness (in.)	Equivalent Diameter Full-Circle Pipe (in.)
1	17	13	12	16	0.060	15
2	21	15	12	16	0.060	18
2A	23	19	12	16	0.060	21
3	28	20	12	14	0.075	24
4	35	24	12	14	0.075	30
5	42	29	18	12	0.105	36
6	49	33	18	12	0.105	42
7	57	38	18	10	0.135	48
8	64	43	18	10	0.135	54
9	71	47	18	8	0.164	60

Table 8
Aluminum Pipe Arch, Spiral Rib

7-1/2 × 3/4 × 3/4-in. Corrugations

Design Size	Span (in.)	Rise (in.)	Min. Cover (in.)	Min. Gauge Required	Coated Thickness (in.)	Equivalent Diameter Full-Circle Pipe (in.)
2	20	16	12	16	0.064	18
2A	23	19	12	16	0.064	21
3	27	21	15	16	0.064	24
4	33	26	18	16	0.064	30
5	40	31	18	14	0.075	36
6	46	36	18	12	0.105	42
7	53	41	21	12	0.105	48
8	60	46	18	10	0.135	54
9	66	51	21	10	0.135	60

2.4. **Coupling Bands**. Furnish coupling bands and other hardware for galvanized or aluminized steel pipe in accordance with AASHTO M 36 for steel pipe and AASHTO M 196 for aluminum pipe. Use coupling bands that are no more than 3 nominal sheet thicknesses lighter than the thickness of the pipe to be connected or no lighter than 0.052 in. for steel or 0.048 in. for aluminum. Provide coupling bands made of the same base metal and coating as the pipe.

3. CONSTRUCTION

3.1. **Designation of Type**. The types of pipes shall be indicated on the Design Documents by the following descriptions:

- Pipe type: Corrugated metal pipe (CMP), corrugated metal pipe arch (CMP ARCH), spiral rib corrugated metal pipe (SRCMP), or spiral rib corrugated metal pipe arch (SRCMP ARCH);
- Type of material: Galvanized steel, aluminum-coated (Type 2), or aluminum;
- Pipe coating: Bituminous coated or polymer coated;
- Special requirements: Paved invert or smooth lining; and
- Pipe size: Diameter or design number.

Furnish any of the material types specified above when pipe is designated as “Corrugated Metal Pipe” without a type of material or pipe coating designation.

3.2. **Excavation, Shaping, Bedding, and Backfill**. Excavate, shape, bed, and backfill in accordance with Item 400, “Excavation and Backfill for Structures,” except where jacking, boring, or tunneling methods are shown on the Design Documents or permitted. Jack, bore, or tunnel in accordance with Item 476, “Jacking, Boring, or Tunneling Pipe or Box.”

Provide uniform backfill material and uniformly compacted density throughout the length of the structure so equal pressure is provided. Allow no heavy earth-moving equipment over the structure until a minimum of 4 ft. of compacted fill (permanent or temporary) has been placed over the top of the structure. Inspect the inside periphery of the structure for local or unequal deformation caused by improper construction methods before adding each new layer of loose backfill material. Continue inspections until a minimum of 24 in. of cover is obtained. Evidence of

such deformation shall be reason for corrective measures. Remove and replace pipe damaged by Developer.

3.3. **Laying Pipe**. Lay pipes on the bedding from the outlet end and join the separate sections firmly together with outside laps of annular joints pointing upstream and longitudinal laps on the sides. Coat any metal in joints not protected by galvanizing or aluminizing with a suitable asphalt paint. Lower sections of pipe into the trench without damaging the pipe or disturbing the bedding and the sides of the trench. Remove and re-lay pipe that is not in alignment or shows excessive settlement after laying.

Lay multiple installations of corrugated metal pipe and pipe arches with the centerlines of individual barrels parallel. Maintain the clear distances between outer surfaces of adjacent pipes given in Table 9.

Table 9

Required Pipe Clear Distances

Diameter Full-Circle Pipe (in.)	Pipe Arch Design Size	Clear Distance Between Pipes (Full-Circle Pipe and Pipe Arch)
18	2	1 ft. 2 in.
21	2A	1 ft. 3 in
24	3	1 ft. 5 in.
30	4	1 ft. 8 in.
36	5	1 ft. 11 in.
42	6	2 ft. 2 in.
48	7	2 ft. 5 in.
54	8	2 ft. 10 in.
60 to 84	9	3 ft. 2 in.
90 to 120	10 and over	3 ft. 5 in.

3.4. **Jointing**. Provide field joints that maintain pipe alignment during construction and prevent infiltration of side material during the life of the installation. Provide one of the following jointing systems**.**

3.4.1. **Coupling Bands**. Use coupling bands with annular corrugations only with pipe with annular corrugations or with helical pipe or spiral rib pipe in which the ends have been rerolled to form annular corrugations. Provide bands with corrugations that have the same dimensions as the corrugations in the pipe end or are designed to engage the first or second corrugation from the end of each pipe. The band may also include a U-shaped channel to accommodate upturned flanges on the pipe.

Field-join pipe with helically corrugated bands or bands with projections (dimples) when helical end corrugations are allowed.

Coupling bands with projections may be used with pipe that has annular or helical end corrugations or spiral ribs. Provide bands formed with the projections in annular rows with

1 projection for each corrugation of helical pipe or spiral rib pipe. Provide 2 annular rows for bands 10-1/2 in. or 12 in. wide and 4 annular rows of projections for bands 16-1/2 in. or 22 in. wide.

Use a coupling band width that conforms to Table 10. Connect the bands using suitable galvanized devices in accordance with AASHTO M 36. Lap coupling bands equally on each of the pipes to form a tightly closed joint after installation. Provide at least the minimum coupling band width recommended by the manufacturer for corrugations not shown in Table 10.

Table 10

Coupling Band Width Requirements

Nominal Corrugation Size[1] (in.)	Nominal Pipe Inside Diameter[2] (in.)	Minimum Coupling Band Width (in.)		
		Annular Corrugated Bands	Helically Corrugated Bands	Bands with Projections
2-2/3 by 1/2	12 to 36	7	12	10-1/2
	42 to 72	10-1/2	12	10-1/2
	78 to 84[3]	10-1/2	12	16-1/4
3 by 1	36 to 72	12	14	10-1/2
	78 to 120	12	14	16-1/4
5 by 1	36 to 72	20	22	12
	78 to 120	20	22	22
7-1/2 by 3/4 by 3/4	18 to 60	10-1/2	12	10-1/2
	66 to 102	10-1/2	12	16-1/4

For helically corrugated pipe or spiral rib pipe with rerolled ends, the nominal size refers to the dimensions of the end corrugations in the pipe.

Equivalent circular diameter for Type II pipe.

Diameter through 120 in. for annular corrugated bands used on rerolled ends of helically corrugated pipe or spiral rib pipe.

The minimum diameter of bolts for coupling bands is 3/8 in. for pipe diameters 18 in. and less and 1/2 in. for pipe diameters 21 in. and greater. Provide at least 2 bolts for bands 12 in. wide or less. Provide at least 3 bolts for bands wider than 12 in.

Provide galvanized hardware in accordance with Item 445, “Galvanizing.”

3.4.2. **Bell and Spigot**. Attach the bell to one end of the corrugated metal pipe at the manufacturing plant before shipment. Provide a bell with a minimum 6-in. stab depth. Install the gasket on the spigot end and apply lubricant in accordance with the manufacturer’s recommendations. Provide gaskets that meet ASTM F477 with Type A Shore durometer hardness of 45 ±5. Do not use thermoplastic

elastomer as the basic polymer. Push the spigot end of the pipe into the bell end of the previously laid pipe during laying of the pipe.

3.4.3. **Pipe Connections and Stub Ends**. Make connections of pipe to existing pipe or appurtenances as shown on the Design Documents. Mortar or concrete the bottom of the existing structure, if necessary, to eliminate any drainage pockets created by the new connection.

Insulate portions of aluminum pipe that are to be in contact with metal other than aluminum by a coating of bituminous material meeting the requirements of Section 460.2.2., "Protective Coating." Extend the coating a minimum of 1 ft. beyond the area of contact.

Restore any damage that results from making the connection when connecting pipe into existing structures that will remain in service. Seal stub ends for connections to future Work not shown on the Design Documents by installing watertight plugs into the free end of the pipe.

Item 461

41. Structural Plate Structures

1. DESCRIPTION

Furnish and install structural plate pipes, pipe arches, arches, underpasses, box culverts, and special shapes.

2. MATERIALS

2.1. **General**. Furnish materials in accordance with the following.

- Item 420, “Concrete Substructures”
- Item 421, “Hydraulic Cement Concrete”
- Item 440, “Reinforcement for Concrete”
- Item 442, “Metal for Structures”
- Item 445, “Galvanizing”
- Item 447, “Structural Bolting”

Provide galvanized steel plates conforming to AASHTO M 167. Provide aluminum plates conforming to AASHTO M 219.

Use Class C concrete for footings.

Fabrication. Use structural units of corrugated galvanized metal for steel plates. Furnish single plates in standard sizes to permit structure length increments of 2 ft. Provide plates with an approximate 2-in. lip beyond each end crest. Design and construct footings for arches to accommodate this additional length. Fabricate galvanized steel inverts, toe walls, footings, and closure plates when required in accordance with the requirements for the galvanized steel structural plate structure.

Use structural units of corrugated aluminum alloy for aluminum plates. Furnish cut plates on structure ends to permit structure length increments of 1 ft. for aluminum alloy structures. Provide plates with an approximate 2-in. lip beyond each end crest. Design and construct footings for arches to accommodate this additional length. Fabricate aluminum alloy inverts, toe walls, footings, and closure plates in accordance with the requirements for the aluminum structural plate structure when required.

Form plates to provide bolted lap joints. Punch bolt holes so all plates with like dimensions, curvature, and number of bolts per foot of seam will be interchangeable. Curve each plate to the proper radius to provide cross-sectional dimensions of the finished structure as shown on the Design Documents. Stagger joints so no more than 3 plates are joined at any one point.

Provide bolt holes along the edges of the plates that will form longitudinal seams in the finished structure as follows:

- Stagger holes in rows 2 in. apart, with one row in the valley and one on the crest of the corrugations and at least 4 bolts per foot for galvanized steel structures.

- Provide holes in rows 1-3/4 in. apart with 2 bolts in each valley and on each crest and at least 16 bolts per 3 feet for aluminum alloy structures.

Provide bolt holes at a maximum spacing of 12 in. along the edges of the plates that will form circumferential seams in the finished structure. Ensure a minimum distance from center of hole to edge of plate of at least 1-3/4 times the diameter of the bolt. Provide bolt holes in the longitudinal seams with a hole diameter that does not exceed the diameter of the bolt by more than 1/8 in. Finish burned edges so they are galvanized and free from oxide and burrs and present a satisfactory appearance. Place legible identification marks on each plate to designate its proper position in the finished structure.

Furnish an itemized statement of the number and size of plates in each shipment and furnish erection drawings showing the position of the plates in the structure. Furnish copies of mill test reports for the base metal. Provide samples of the plates in accordance with Tex-708-I, "Sampling Galvanized Metal Products for Coating Weight," when directed.

Provide metal headwalls that comply with the details shown on the Design Documents.

2.2. **Design**. The gauge or minimum thickness and permissible corrugations of metal plates to be furnished for each structure shall be shown on the Design Documents.

3. CONSTRUCTION

3.1. **Designation of Type**. The type of structure shall be indicated on the Design Documents by the following descriptions:

- Structure type: structural plate pipe, structural plate pipe arch, structural plate arch, structural plate underpass, or structural plate box culvert.
- Type of material: galvanized steel or aluminum.
- Structure size: diameter or horizontal and vertical dimensions.
- When the type of material is not specified: either galvanized steel or aluminum.

3.2. **Foundations**. Construct substructure for structural plate arches as shown on the Design Documents. Form and finish footings to established true lines and grades. Set anchors or box culvert slots to true line and grade when placing concrete for each substructure unit. Place substructure units in accordance with Item 420, "Concrete Substructures," and Item 440, "Reinforcement for Concrete."

Place footings entirely on hard materials such as rock or shale or on firm soil or compacted soil cushion. Undercut and replace rock with a minimum 12 in. thick compacted soil cushion when only a portion of the founding area is rock. Remove the soil when a thin layer is partially covering rock within the bearing area and place the footings directly on rock in accordance with details shown on the Design Documents.

3.3. **Erection**. Coat any steel in joints not protected by galvanizing with suitable asphalt paint. Handle pipes and plates carefully to avoid damage to any protective coating.

Provide hot-dip galvanized anchor bolts with a minimum 3/4-in. diameter and 6-in. length spaced at maximum 19-in. centers for anchoring plates to headwalls or other concrete end treatment. Place plates for arch structures after the substructure has cured a minimum of 3 Days.

Insert all bolts not already in place when all plates are in position, and tighten all nuts progressively and uniformly, beginning at one end of the structure. Tighten all nuts a second time to a torque between 150 and 300 ft. lb. for steel bolts and between 100 and 150 ft. lb. for aluminum bolts. Check at least 20% of the bolts with a torque wrench when using an impact wrench. Replace all service bolts used in drawing the plates together with standard bolts.

The tolerance for span and rise during erection is 2% of design measurements or 5 in., whichever is less.

3.4. **Workmanship**. Repair minor damage to galvanized coating in accordance with Section 445.3.5., "Repairs". All other structural plates on which the galvanized coating has been damaged or that show defective workmanship shall be rejected. This requirement applies not only to the individual plates but also to the shipment as a whole. The presence of any of the following defects shall be cause for rejection:

- uneven laps;
- elliptical shape (unless specified);
- variation from a straight line;
- ragged edges;
- loose bolts;
- uneven bolt lines or spacing;
- illegible brand;
- bruised, scaled, or broken galvanized coating; or
- dents or bends in the metal.

3.5. **Excavation and Backfill**. Excavate and backfill or construct the embankment around and over the structural plate structure in accordance with Item 400, "Excavation and Backfill for Structures," except as modified in this Section. Furnish acceptable devices for monitoring the horizontal and vertical shape of the structure. The tolerance for span and rise during backfilling operations is 2% of design measurements or 5 in., whichever is less.

For arches (except pipe arches), if the headwalls are built after backfilling the arch, place the first material midway between the ends of the arch, forming as narrow a ramp as possible until the top of the arch is reached. Construct the ramp evenly from both sides, and thoroughly compact the backfill as it is placed. Deposit the remainder of the backfill from the top of the arch both ways from the center to the ends and as evenly as possible on both sides of the arch after constructing the two ramps to the top of the arch. If the headwalls are built before backfilling the arch, place the fill material first adjacent to one headwall until the top of the arch has been reached and then from the top of the arch toward the other headwall. Deposit the material evenly on both sides of the arch.

Perform the same backfill phases for all structures more or less simultaneously. Do not drop backfill from such a height or concentrate it in such an amount before distribution over the top arch that it will damage the flexible structure. Compact this backfill with hand-operated tamps or other acceptable equipment.

Use only hand-operated, mechanical tamping equipment within vertical planes 2 ft. beyond the horizontal limits of the structure until a minimum of 2 ft. of cover has been compacted over the structure. Ensure all large construction equipment is kept a minimum of 3 ft. from the center of the span to prevent local deformations of the plates due to concentrated loads. Do not use heavy earth-moving equipment over the structure until a minimum of 4 ft. of permanent or temporary

compacted fill has been placed over the structure. Check with the structure manufacturer before crossing the structure with any construction equipment with a 75,000 lb. or greater single-axle load. Additional cover beyond 4 ft. may be required to accommodate these vehicles. Remove and replace damaged plates or structures.

Inspect the inside periphery of the structure for local or unequal deformation caused by improper construction methods before adding each new layer of loose backfill material. Continue inspections until a minimum of 24 in. of cover is obtained. Evidence of such deformation shall be reason for corrective measures.

Item 462

42. Concrete Box Culverts and Drains

1. DESCRIPTION

Furnish, construct, and install concrete box culverts and drains.

2. MATERIALS

2.1. **General**. Furnish materials in accordance with the following.

- Item 420, "Concrete Substructures"
- Item 421, "Hydraulic Cement Concrete"
- Item 440, "Reinforcement for Concrete"
- Item 464, "Reinforced Concrete Pipe"

Provide cast-in-place or precast, formed or machine-made, box culverts, and drains. Use Class S concrete for top slabs of cast-in-place concrete culverts for culverts with overlay, a 1- to 2-course surface treatment or a top slab that is the final riding surface. Use Class C concrete for the rest of the culvert and for all other cast-in-place boxes. Culverts with fill do not require Class S concrete.

Furnish material for machine-made precast boxes in accordance with DMS-7310, "Reinforced Concrete Pipe and Machine-Made Precast Box Culvert Fabrication and Plant Qualification."

2.2. **Fabrication**.

2.2.1. **Cast-in-Place**. Meet Item 420, "Concrete Substructures" and Item 422, "Concrete Superstructures."

2.2.2. **Formed Precast**. Meet Item 424, "Precast Concrete Structural Members (Fabrication)."

2.2.3. **Machine-Made Precast**. Machine-made precast box culvert fabrication plants must be approved in accordance with DMS-7310, "Reinforced Concrete Pipe and Machine-Made Precast Box Culvert Fabrication and Plant Qualification." TxDOT maintains a list of approved machine-made precast box culvert plants. Fabricate machine-made precast boxes in accordance with DMS-7310.

2.3. **Testing**.

2.3.1. **Cast-in-Place**. Provide test specimens that meet Item 421, "Hydraulic Cement Concrete."

2.3.2. **Formed Precast**. Make, cure, and test compressive test specimens in accordance with Tex-704-I.

2.3.3. **Machine-Made Precast**. Make, cure, and test compressive test specimens in accordance with DMS-7310.

2.3.4. **Testing Equipment**. The producer must furnish all equipment required for testing concrete for boxes produced in a precasting plant.

2.4. **Lifting Holes**. Provide no more than 4 lifting holes in each section for precast boxes. Lifting holes may be cast, cut into fresh concrete after form removal, or drilled. Provide lifting holes large enough for adequate lifting

devices based on the size and weight of the box section. Use lifting holes no larger than 3 in. in diameter. Cut no more than 5 in. in any direction of reinforcement per layer for lifting holes.

2.5. **Marking**. Mark precast boxes with the following:

- name or trademark of fabricator and plant location;
- ASTM designation;
- date of manufacture;
- box size;
- minimum and maximum fill heights;
- designated fabricator's approval stamp;
- boxes to be used for jacking and boring (when applicable);
- designation "SR" for boxes meeting sulfate-resistant concrete plan requirements (when applicable); and
- match-marks for proper installation, when required under Section 462.2.6., "Tolerances."

Mark 1 end of each box section, for boxes without lifting holes, on the inside and outside walls to indicate the top or bottom as it will be installed.

Indent markings into the box section or paint them on each box with waterproof paint.

2.6. **Tolerances**. Ensure precast sections meet the permissible variations listed in ASTM C1577 and that the sides of a section at each end do not vary from being perpendicular to the top and bottom by more than 1/2 in. when measured diagonally between opposite interior corners.

Ensure wall and slab thicknesses are not less than shown on the Design Documents except for occasional deficiencies not greater than 3/16 in. or 5%, whichever is greater. If proper jointing is not affected, thicknesses in excess of plan requirements are acceptable.

Deviations from the above tolerances will be acceptable if the sections can be fitted at the plant or jobsite and the joint opening at any point does not exceed 1 in. Use match-marks for proper installation on sections that have been accepted in this manner.

2.6.1. **Boxes for Jacking Operations**. Use boxes for jacking operations (as defined in Item 476, "Jacking, Boring, or Tunneling Pipe or Box,") meeting the following additional requirements:

- The box ends must be square such that no point deviates more than 3/8 in. from a plane placed on the end of the box that is perpendicular to the box sides, and
- The slab and wall thicknesses must not be less than specified on the Design Documents and must not exceed the specified thickness by more than 1/2 in.

2.7. **Defects and Repair**. Fine cracks on the surface of the member that do not extend to the plane of the nearest reinforcement are acceptable unless the cracks are numerous and extensive. Repair cracks that extend into the plane of the reinforcing steel in an approved manner. Excessive damage, honeycomb, or cracking shall be subject to structural review. Boxes that are soundly repaired, properly finished, and cured in conformance with pertinent specifications are acceptible. Discontinue further production of precast sections when fine cracks on the surface indicate poor curing practices until corrections are made and proper curing is provided.

Repair machine-made precast boxes in accordance with DMS-7310, "Reinforced Concrete Pipe and Machine-Made Precast Box Culvert Fabrication and Plant Qualification."

2.8. **Storage and Shipment**. Store precast sections on a level surface. Do not place any load on the sections until design strength is reached and curing is complete. Shipment of sections is permissible when the design strength and curing requirements have been met.

Store and ship machine-made precast boxes in accordance with DMS-7310, "Reinforced Concrete Pipe and Machine-Made Precast Box Culvert Fabrication and Plant Qualification."

3. CONSTRUCTION

3.1. **Excavation, Shaping, Bedding, and Backfill**. Excavate, shape, bed, and backfill in accordance with Item 400, "Excavation and Backfill for Structures," except where jacking, boring, or tunneling methods are shown on the Design Documents or permitted. Jack, bore, or tunnel in accordance with Item 476, "Jacking, Boring, or Tunneling Pipe or Box." Immediate backfilling is permitted for all box structures where joints consist of materials other than mortar. Take precautions in placing and compacting the backfill to avoid any movement of the boxes or damage to the joints. Remove and replace boxes damaged by Developer.

3.2. **Placement of Boxes**. Place the box sections in conformance with the Design Documents when precast boxes are used to form multiple barrel structures. Place material to be used between barrels as shown on the Design Documents. Start the laying of boxes on the bedding at the outlet end and proceed toward the inlet end with the abutting sections properly matched. Fit, match, and lay the boxes to form a smooth, uniform conduit true to the established lines and grades. Lower the box sections into the trench, for trench installations, without damaging the box or disturbing the bedding and the sides of the trench. Carefully clean the ends of the box before it is placed. Prevent the earth or bedding material from entering the box as it is laid. Remove and re-lay boxes that are not in alignment or show excessive settlement after laying. Form and place cast-in-place boxes in accordance with Item 420, "Concrete Substructures."

3.3. **Jointing**. Use any of the jointing materials in accordance with the joint requirements specified in Item 464, "Reinforced Concrete Pipe." Box joints for rubber gasketed material may be substituted for tongue and groove joints, provided they meet the requirements of ASTM C1677 for design of the joints and permissible variations in dimensions.

3.4. **Connections and Stub Ends**. Make connections of boxes to existing boxes, pipes, drains, or drain appurtenances as shown on the Design Documents. Mortar or concrete the bottom of existing structures if necessary to eliminate any drainage pockets created by the connections. Connect boxes to any required headwalls, wingwalls, safety end treatments or riprap, or other structures as shown on the Design Documents. Repair any damage to the existing structure resulting from making the connections. Finish stub ends for connections to future Work not shown on the Design Documents by installing watertight plugs into the free end of the box.

Fill lifting holes with mortar or concrete and cure for precast boxes. Precast concrete or mortar plugs may be used.

Item 464

43. Reinforced Concrete Pipe

1. DESCRIPTION

Furnish and install reinforced concrete pipe, materials for precast concrete pipe culverts, or precast concrete storm drain mains, laterals, stubs, and inlet leads.

2. MATERIALS

2.1. **Fabrication**. Fabrication plants must be approved by TxDOT in accordance with DMS-7310, "Reinforced Concrete Pipe and Machine-Made Precast Concrete Box Culvert Fabrication and Plant Qualification," before furnishing precast reinforced concrete pipe for TxDOT projects. TxDOT maintains a list of approved reinforced concrete pipe plants.

Furnish material and fabricate reinforced concrete pipe in accordance with DMS-7310, "Reinforced Concrete Pipe and Machine-Made Precast Concrete Box Culvert Fabrication and Plant Qualification."

2.2. **Design**.

2.2.1. **General**. The class and D-load equivalents are shown in Table 1. Furnish arch pipe in accordance with ASTM C506 and the dimensions shown in Table 2. Furnish horizontal elliptical pipe in accordance with ASTM C507 and the dimensions shown in Table 3. For arch pipe and horizontal elliptical pipe the minimum height of cover required is 1 ft.

Table 1

Circular Pipe

ASTM C76 & ASTM C655

Class	D-Load
I	800
II	1,000
III	1,350
IV	2,000
V	3,000

Table 2

Arch Pipe

Design Size	Equivalent Diameter (in.)	Rise (in.)	Span (in.)
1	18	13-1/2	22
2	21	15-1/2	26
3	24	18	28-1/2
4	30	22-1/2	36-1/4
5	36	26-5/8	43-3/4
6	42	31-5/16	51-1/8
7	48	36	58-1/2
8	54	40	65
9	60	45	73
10	72	54	88

Table 3

Horizontal Elliptical Pipe

Design Size	Equivalent Diameter (in.)	Rise (in.)	Span (in.)
1	18	14	23
2	24	19	30
3	27	22	34
4	30	24	38
5	33	27	42
6	36	29	45
7	39	32	49
8	42	34	53
9	48	38	60
10	54	43	68

2.2.2. **Jacking, Boring, or Tunneling**. Design pipe for jacking, boring, or tunneling considering the specific installation conditions such as the soil conditions, installation methods, anticipated deflection angles, and jacking stresses. Provide design notes and drawings signed and sealed by a Registered Professional Engineer when requested.

2.3. **Marking**. Furnish each section of reinforced concrete pipe marked with the following information specified in DMS-7310, "Reinforced Concrete Pipe and Machine-Made Precast Concrete Box Culvert Fabrication and Plant Qualification."

- class or D-load of pipe,
- ASTM designation,
- date of manufacture,
- pipe size,
- name or trademark of fabricator and plant location,
- designated fabricator's approval stamp,
- pipe to be used for jacking and boring (when applicable), and
- designation "SR" for pipe meeting sulfate-resistant concrete plan requirements (when applicable).

Clearly mark 1 end of each section during the process of manufacture or immediately thereafter for pipe with elliptical reinforcement. Mark the pipe on the inside and outside of opposite walls to show the location of the top or bottom of the pipe as it should be installed unless the external shape of the pipe is such that the correct position of the top and bottom is obvious. Mark the pipe section by indenting or painting with waterproof paint.

2.4. **Inspection**. Provide access for inspection of the finished pipe at the Project site before and during installation.

2.5. **Causes for Rejection**. Individual section of pipe may be rejected for any of the conditions stated in the Annex of DMS-7310, "Reinforced Concrete Pipe and Machine-Made Precast Concrete Box Culvert Fabrication and Plant Qualification."

2.6. **Repairs**. Make repairs if necessary as stated in the Annex of DMS-7310, "Reinforced Concrete Pipe and Machine-Made Precast Concrete Box Culvert Fabrication and Plant Qualification."

2.7. **Jointing Materials**. Use any of the following materials for the making of joints. Furnish a manufacturer's certificate of compliance for all jointing materials except mortar.

2.7.1. **Mortar**. Provide mortar for joints that meets the requirements of Section 464.3.3., "Jointing."

2.7.2. **Cold-Applied, Plastic Asphalt Sewer Joint Compound**. Provide a material that consists of natural or processed asphalt base, suitable volatile solvents, and inert filler. Ensure the consistency is such that the ends of the pipe can be coated with a layer of the compound up to 1/2 in. thick by means of a trowel. Provide a joint compound that cures to a firm, stiff plastic condition after application. Provide a material of a uniform mixture. Stir any small separation found in the container into a uniform mix before using.

Provide a material that meets the requirements of Table 4 when tested in accordance with Tex-526-C.

Table 4

Cold-Applied, Plastic Asphalt Sewer Joint Compound Material Requirements

Composition	Analysis
Asphalt base, 100%–% volatiles–% ash, % by weight	28–45
Volatiles, 212°F evaporation, 24 hr., % by weight	10–26
Mineral matter, determined as ash, % by weight	30–55
Consistency, cone penetration, 150 q, 5 sec., 77°F	150–275

2.7.3. **Rubber Gaskets**. Provide gaskets that conform to ASTM C1619 Class A or C. Meet the requirements of ASTM C443 for design of the pipe joints and permissible variations in dimensions.

2.7.4. **Pre-Formed Flexible Joint Sealants**. Pre-formed flexible joint sealants may be used for sealing joints of tongue-and-groove concrete pipe. Provide flexible joint sealants that meet the requirements of ASTM C990. Use flexible joint sealants that do not depend on oxidizing, evaporating, or chemical action for its adhesive or cohesive strength. Supply in extruded rope form of suitable cross-section. Provide a size of the pre-formed flexible joint sealant in accordance with the manufacturer's recommendations and large enough to properly seal the joint. Protect flexible joint sealants with a suitable wrapper able to maintain the integrity of the jointing material when the wrapper is removed.

3. CONSTRUCTION

3.1. **Excavation, Shaping, Bedding, and Backfill**. Excavate, shape, bed, and backfill in accordance with Item 400, "Excavation and Backfill for Structures," except where jacking, boring, or tunneling methods are permitted. Jack, bore, or tunnel the pipe in accordance with Item 476, "Jacking, Boring, or Tunneling Pipe or Box." Immediate backfilling is permitted if joints consist of materials other than mortar. Take special precautions in placing and compacting the backfill to avoid any movement of the pipe or damage to the joints. Do not use heavy earth-moving equipment to haul over the structure until a minimum of 4 ft. of permanent or temporary compacted fill has been placed over the structure. Remove and replace pipe damaged by Developer.

3.2. **Laying Pipe**. Start the laying of pipe on the bedding at the outlet end with the spigot or tongue end pointing downstream, and proceed toward the inlet end with the abutting sections properly matched, true to the established lines and grades. Fit, match, and lay the pipe to form a smooth, uniform conduit. Cut cross trenches in the foundation to allow the barrel of the pipe to rest firmly upon the bedding where bell-and-spigot pipe is used. Cut cross trenches no more than 2 in. larger than the bell ends of the pipe. Lower sections of pipe into the trench without damaging the pipe or disturbing the bedding and the sides of the trench. Carefully clean the ends of the pipe before the pipe is placed. Prevent the earth or bedding material from entering the pipe as it is laid. Lay the pipe in the trench, when elliptical pipe with circular reinforcing or circular pipe with elliptical reinforcing is used, so the markings for the top or bottom are not more than 5° from the vertical plane through the longitudinal axis of the pipe. Remove and re-lay pipe that is not in alignment or shows excessive settlement after laying.

Lay multiple lines of reinforced concrete pipe with the centerlines of the individual barrels parallel. Use the clear distances between outer surfaces of adjacent pipes shown in Table 5. Use the equivalent diameter from Table 2 or Table 3 for arch pipe or horizontal elliptical pipe to determine the clear distance requirement in Table 5.

Table 5

Minimum Clear Distance between Pipes

Equivalent Diameter	Min. Clear Distance
18 in.	9 in.
24 in.	11 in.
30 in.	1 ft. 1 in.
36 in.	1 ft. 3 in.
42 in.	1 ft. 5 in.
48 in.	1 ft. 7 in.
54 in.	1 ft. 11 in.
60 to 84 in.	2 ft.

3.3. **Jointing**. Make available an appropriate rolling device similar to an automobile mechanic's "creeper" for conveyance through small-size pipe structures.

3.3.1. **Joints Sealed with Hydraulic Cement Mortar**. Use Type S mortar meeting the requirements of ASTM C270. Clean and wet the pipe ends before making the joint. Plaster the lower half of the bell or groove and the upper half of the tongue or spigot with mortar. Pack mortar into the joint from both inside and outside the pipe after the pipes are tightly jointed. Finish the inside smooth and flush with adjacent joints of pipe. Form a bead of semicircular cross-section over tongue-and-groove joints outside the pipe, extending at least 1 in. on each side of the joint. Form the mortar for bell-and-spigot joints to a 45° fillet between the outer edge of the bell and the spigot. Cure mortar joints by keeping the joints wet for at least 48 hr. or until the backfill has been completed, whichever comes first. Place fill or backfill once the mortar jointing material has cured for at least 6 hr. Conduct jointing only when the atmospheric temperature is above 40°F. Protect mortared joints against freezing by backfilling or other approved methods for at least 24 hr.

Driveway culverts do not require mortar banding on the outside of the pipe.

Furnish pipes, with approval, that are large enough for a person to enter with the groove between 1/2 in. and 3/4 in. longer than the tongue. Such pipe may be laid and backfilled without mortar joints. Clean the space on the interior of the pipe between the end of the tongue and the groove of all foreign material, thoroughly wet and fill with mortar around the entire circumference of the pipe, and finish flush after the backfilling has been completed.

3.3.2. **Joints Using Cold-Applied, Plastic Asphalt Sewer Joint Compound**. Ensure both ends of the pipes are clean and dry. Trowel or otherwise place a 1/2–in. thick layer of the compound in the groove end of the pipe covering at least 2/3 of the joint face around the entire circumference. Shove home the tongue end of the next pipe with enough pressure to make a tight joint. Remove any excess mastic projecting into the pipe after the joint is made. Backfill after the joint has been inspected and approved.

3.3.3. **Joints Using Rubber Gaskets**. Make the joint assembly according to the recommendations of the gasket manufacturer. Make joints watertight when using rubber gaskets. Backfill after the joint has been inspected and approved.

3.3.4. **Joints Using Pre-Formed Flexible Joint Sealants**. Install pre-formed flexible joint sealants in accordance with the manufacturer's recommendations. Place the joint sealer so no dirt or other deleterious materials come in contact with the joint sealing material. Pull or push home the pipe with enough force to properly seal the joint. Remove any joint material pushed out into the interior of the pipe that would tend to obstruct the flow. Store pre-formed flexible joint sealants in an area warmed naturally or artificially to above 70°F in an approved manner when the atmospheric temperature is below 60°F. Apply flexible joint sealants to pipe joints immediately before placing pipe in trench, and connect pipe to previously laid pipe. Backfill after the joint has been inspected and approved.

3.4. **Connections and Stub Ends**. Make connections of concrete pipe to existing pipes, pipe storm drains, or storm drain appurtenances as shown on the Design Documents.

Mortar or concrete the bottom of existing structures if necessary to eliminate any drainage pockets created by the connections. Repair any damage to the existing structure resulting from making the connections.

Make connections between concrete pipe and corrugated metal pipe with a suitable concrete collar and a minimum thickness of 4 in.

Finish stub ends for connections to future Work not shown on the Design Documents by installing watertight plugs into the free end of the pipe.

Fill lift holes with concrete, mortar, or precast concrete plugs after the pipe is in place.

Item 465

44. Junction Boxes, Manholes, and Inlets

1. DESCRIPTION

Construct junction boxes, manholes and inlets, complete in place or to the stage detailed, including furnishing and installing frames, grates, rings, and covers.

2. MATERIALS

Furnish materials in accordance with the following:

- Item 420, "Concrete Substructures"
- Item 421, "Hydraulic Cement Concrete"
- Item 440, "Reinforcement for Concrete"
- Item 471, "Frames, Grates, Rings, and Covers"

Cast-in-place junction boxes, manholes, inlets, risers, and appurtenances are acceptable. Alternate designs for cast-in-place items must be acceptable to TxDOT and must conform to functional dimensions and design loading. Alternate designs must be designed and sealed by a Registered Professional Engineer.

2.1. **Concrete**. Furnish Class H concrete for formed precast junction boxes, manholes, and inlets. Furnish concrete per DMS-7310, "Reinforced Concrete Pipe and Machine-Made Precast Concrete Box Culvert Fabrication and Plant Qualification," for machine-made precast junctions boxes, manholes, and inlets. Air-entrained concrete will not be required in precast concrete members. Furnish Class C concrete for cast-in-place manholes and inlets.

2.2. **Mortar**. Furnish mortar conforming to DMS-4675, "Cementitious Grouts and Mortars for Miscellaneous Applications."

2.3. **Timber**. Provide sound timber that is a minimum of 3 in. nominal thickness and reasonably free of knots and warps for temporary covers when used with Stage I construction (see Article 465.3., "Construction").

2.4. **Other Materials**. Use commerical-type hardware as approved.

3. CONSTRUCTION

Build all types of junction boxes, manholes, and inlets either complete or in 2 stages, described as Stage I and Stage II.

Construct the Stage I portion of junction boxes, manholes, and inlets as shown on the Design Documents or as specified in this Item. Furnish and install a temporary cover as approved .

Furnish and install the storm drain pipe and a temporary plug for the exposed end of the storm drain pipe from the storm drain to a point below the top of curb indicated on the Design Documents for Stage I construction of cast iron or steel inlet units.

Construct Stage II after the pavement structure is substantially complete.

Construct the remaining wall height and top of junction box, manhole, or inlet for Stage II, and furnish and install any frames, grates, rings and covers, curb beams, or collecting basins required.

Construct cast-in-place junction boxes, manholes, and inlets in accordance with Item 420, "Concrete Substructures." Forms shall be required for all concrete walls. Outside wall forms for cast-in-place concrete may be omitted with approval if the surrounding material can be trimmed to a smooth vertical face.

3.1. **Precast Junction Boxes, Manholes, and Inlets**. Construct formed precast junction boxes, manholes, and inlets in accordance with Item 420, "Concrete Substructures," except as otherwise noted in this Item. Construct machine-made precast junction boxes, manholes, and inlets in accordance with ASTM C478 except as otherwise noted in this Item. Mix and place concrete for machine-made junction boxes, manholes, and inlets per the requirements of DMS-7310, "Reinforced Concrete Pipe and Machine-Made Precast Concrete Box Culvert Fabrication and Plant Qualification." Conform to the product permissible variations and rejection criteria stated in ASTM C478 for machine-made precast junction boxes, manholes, and inlets. Cure all precast units in accordance with Item 424, "Precast Concrete Structures (Fabrication)."

Multi-project fabrication plants (as defined in Item 424, "Precast Concrete Structures (Fabrication)") that produce manholes and inlets will be approved by TxDOT in accordance with DMS-7340, "Qualification Procedure for Multi-Project Fabrication Plants of Precast Concrete Manholes and Inlets." TxDOT maintains a list of approved multi-project plants.

3.1.1. **Lifting Holes**. Provide no more than 4 lifting holes in each section for precast units. Lifting holes may be cast, cut into fresh concrete after form removal, or drilled. Provide lifting holes large enough for adequate lifting devices based on the size and weight of the section. The maximum hole diameter is 3 in. at the inside surface of the wall and 4 in. at the outside surface. Cut no more than 5 in. in any direction of reinforcement per layer for lifting holes. Repair spalled areas around lifting holes.

3.1.2. **Marking**. Clearly mark each precast junction box, manhole, and inlet unit with the following information:

name or trademark of fabricator and plant location;
product designation;
ASTM designation (if applicable);
date of manufacture;
designated fabricator's approval stamp; and
designation "SR" for product meeting sulfate-resistant concrete plan requirements (when applicable).

3.1.3. **Storage and Shipment**. Store precast units on a level surface. Do not ship units until design strength requirements have been met.

3.2. **Excavation, Shaping, Bedding, and Backfill**. Excavate, shape, bed, and backfill in accordance with Item 400, "Excavation and Backfill for Structures." Immediate backfilling is permitted for all junction box, manhole, and inlet structures where joints consist of rubber boots, rubber gaskets, or bulk or preformed joint sealant. Take precautions in placing and compacting the backfill to avoid any movement of junction boxes, manholes, and inlets. Remove and replace junction boxes, manholes, and inlets damaged by Developer.

3.3. **Junction Boxes, Manholes, and Inlets for Precast Concrete Pipe Storm Drains**. Construct junction boxes, manholes, and inlets for precast concrete pipe storm drains prior to completion of storm drain lines into or through the junction box, manhole, or inlet. Neatly cut all storm drains at the inside face of the walls of the junction box, manhole, or inlet.

3.4. **Junction Boxes, Manholes, and Inlets for Box Storm Drains**. Place bases or risers of junction boxes, manholes, and inlets for box storm drains prior to or in conjuction with placement of the storm drain. Backfill the junction box, manhole, or inlet and storm drain as a whole.

3.5. **Inverts**. Shape and route floor inverts passing out or through the junction box, manhole, or inlet as shown on the Design Documents. Shape by adding and shaping mortar or concrete after the base is placed or by placing the required additional material with the base.

3.6. **Finishing Complete Junction Boxes, Manholes, and Inlets**. Complete junction boxes, manholes, and inlets in accordance with the Design Documents. Backfill to original ground elevation in accordance with Item 400, "Excavation and Backfill for Structures."

3.7. **Finishing Stage I Construction**. Complete Stage I construction by constructing the walls to the elevations shown on the Design Documents and backfilling to required elevations in accordance with Item 400, "Excavation and Backfill for Structures."

3.8. **Stage II Construction**. Construct subgrade and base course or concrete pavement construction over Stage I junction box, manhole, or inlet construction. Excavate to expose the top of Stage I construction and complete the junction box, manhole or inlet in accordance with the Design Documents and these Specifications, including backfill and cleaning of all debris from the bottom of the junction box, manhole, or inlet.

3.9. **Inlet Units**. Install cast iron or steel inlet units in conjunction with the construction of concrete curb and gutter. Set the inlet units securely in position before placing concrete for curb and gutter. Form openings for the inlets and recesses in curb and gutter as shown on the Design Documents. Place and thoroughly consolidate concrete for curb and gutter adjacent to inlets and around the inlet castings and formed openings and recesses without displacing the inlet units.

Item 466

45. Headwalls and Wingwalls

1. DESCRIPTION

Furnish, construct, and install concrete headwalls and wingwalls for drainage structures and underpasses.

2. MATERIALS

2.1. **General**. Furnish materials in accordance with the following.

- Item 420, "Concrete Substructures"
- Item 421, "Hydraulic Cement Concrete"
- Item 440, "Reinforcement for Concrete"

Use Class C concrete for cast-in-place and precast concrete units. Furnish cast-in-place or precast headwalls and wingwalls.

2.2. **Fabrication**.

2.2.1. **General**. Fabricate cast-in-place concrete units and precast units in accordance with Item 420, "Concrete Substructures." Use the following definitions for headwalls and wingwalls:

- "Headwalls" refers to all walls, including wings, at the ends of single-barrel and multiple-barrel pipe culvert structures.
- "Wingwalls" refers to all walls at the ends of single-barrel or multiple-barrel box culvert structures.

2.2.2. **Lifting Holes**. Provide no more than 4 lifting holes in each section for precast units. Lifting holes may be cast, cut into fresh concrete after form removal, or drilled. Provide lifting holes large enough for adequate lifting devices based on the size and weight of the section. The maximum hole diameter is 3 in. at the inside surface of the wall and 4 in. at the outside surface. Cut no more than 1 longitudinal wire or 2 circumferential wires per layer of reinforcing steel when locating lift holes. Repair spalled areas around lifting holes.

2.2.3. **Marking**. Clearly mark each precast unit before shipment from the casting or fabrication yard with the following:

- the date of manufacture,
- the name or trademark of the manufacturer, and
- the type and size designation.

2.2.4. **Storage and Shipment**. Store precast units on a level surface. Do not place any loads on precast concrete units until design strength is reached. Do not ship units until design strength requirements have been met.

2.2.5. **Causes for Rejection**. Precast units may be rejected for not meeting any one of the specification requirements. Individual units may also be rejected for fractures or cracks passing through the

wall or surface defects indicating honeycombed or open texture surfaces. Remove rejected units from the Project, and replace them with acceptable units meeting the requirements of this Item.

2.2.6. **Defects and Repairs**. Occasional imperfections in manufacture or accidental damage sustained during handling may be repaired. The repaired units will be acceptable if they conform to the requirements of this Item and the repairs are sound, properly finished, and cured in conformance with pertinent specifications.

3. CONSTRUCTION

3.1. **General**. Remove portions of existing structures and drill, dowel, and grout in accordance with Item 420, "Concrete Substructures."

3.2. **Excavation, Shaping, Bedding, and Backfill**. Excavate, shape, bed, and backfill in accordance with Item 400, "Excavation and Backfill for Structures." Take special precautions in placing and compacting the backfill to avoid any movement or damage to the units. Bed precast units on foundations of firm and stable material accurately shaped to conform to the bases of the units.

3.3. **Placement of Precast Units**. Provide adequate means to lift and place the precast units. Fill lifting holes with mortar or concrete and cure. Precast concrete or mortar plugs may be used.

3.4. **Connections**. Make connections to new or existing structures in accordance with the details shown on the Design Documents. Furnish jointing material in accordance with Item 464, "Reinforced Concrete Pipe."

Remove a length of the existing pipe from the headwall to the joint when removing existing headwalls as shown on the Design Documents. Re-lay the removed pipe if approved, or furnish and lay a length of new pipe.

Item 467

46. Safety End Treatment

1. DESCRIPTION

Furnish, construct, and install safety end treatments for drainage structures.

2. MATERIALS

2.1. **General**. Furnish materials in accordance with the following.

- Item 420, “Concrete Substructures”
- Item 421, “Hydraulic Cement Concrete”
- Item 432, “Riprap”
- Item 440, “Reinforcement for Concrete”
- Item 442, “Metal for Structures”
- Item 445, “Galvanizing”
- Item 460, “Corrugated Metal Pipe”
- Item 464, “Reinforced Concrete Pipe”

Use Class C concrete for cast-in-place and precast concrete units. Furnish cast-in-place or precast safety end treatments. Furnish Class B concrete for concrete riprap. Provide galvanized steel for prefabricated metal end sections in accordance with Item 460, “Corrugated Metal Pipe.”

Furnish pipe runners in accordance with the following:

- ASTM A53, Type E or S, Grade B;
- ASTM A500, Grade B; or
- API 5L, Grade X42.

Furnish plates and angles in accordance with ASTM A36. Furnish nuts and bolts in accordance with ASTM A307. Galvanize pipes, plates, angles, nuts, and bolts in accordance with Item 445, “Galvanizing.”

2.2. **Fabrication**. Fabricate cast-in-place concrete units and precast units in accordance with Item 420, “Concrete Substructures.” Provide either prefabricated metal end sections or mitered CMP when specified for the pipe structure.

Provide one of the following when reinforced concrete pipe (RCP) is specified for the pipe structure:

mitered RCP or

precast safety end treatment (SET) units. Provide riprap only if the Design Documents specifically require it for this alternative.

2.2.1. **SET Types**.

2.2.1.1. **Type I**. Provide Type I SET consisting of reinforced concrete headwalls or wingwalls and pipe runners in accordance with the details shown on the Design Documents when required.

2.2.1.2. **Type II**. Provide Type II SET in accordance with the details shown on the Design Documents consisting of the following:

- CMP or RCP mitered to the proper slope, concrete riprap and pipe runners, when required;
- prefabricated metal end sections, concrete riprap and pipe runners, when required; or
- precast SET units, concrete riprap, when required, and pipe runners, when required.

2.2.2. **Lifting Holes**. Provide no more than 4 lifting holes in each section for precast units. Lifting holes may be cast, cut into fresh concrete after form removal, or drilled. Provide lifting holes large enough for adequate lifting devices based on the size and weight of the section. The maximum hole diameter is 3 in. at the inside surface of the wall and 4 in. at the outside surface. Cut no more than 1 longitudinal wire or 2 circumferential wires per layer of reinforcing steel when locating lift holes. Repair spalled areas around lifting holes.

2.2.3. **Marking**. Clearly mark the following on each precast unit, mitered CMP, mitered RCP, or metal end section before shipment from the casting or fabrication yard:

the date of manufacture,

the name or trademark of the manufacturer, and

the type and size designation.

2.2.4. **Storage and Shipment**. Store precast units on a level surface. Do not place any loads on precast units until the design strength is reached. Do not ship units until design strength requirements have been met.

2.2.5. **Causes for Rejection**. Precast units may be rejected for not meeting any one of the specification requirements. Individual units may also be rejected for fractures or cracks passing through the wall or surface defects indicating honeycombed or open texture surfaces. Remove rejected units from the Project and replace with acceptable units meeting the requirements of this Item.

2.2.6. **Defects and Repairs**. Occasional imperfections in manufacture or accidental damage sustained during handling may be repaired. The repaired units will be acceptable if they conform to the requirements of this Item and the repairs are sound and properly finished and cured in conformance with pertinent specifications. Repair damaged galvanizing in accordance with Section 445.3.5., “Repairs.”

3. CONSTRUCTION

3.1. **General**. Remove portions of existing structures in accordance with Section 420.4.8., “Extending Existing Substructures.” Drill, dowel, and grout in accordance with Item 420, “Concrete Substructures.” Furnish concrete riprap in accordance with Item 432, “Riprap.”

Provide riprap on all prefabricated metal end sections.

3.2. **Excavation, Shaping, Bedding, and Backfill**. Excavate, shape, bed, and backfill in accordance with Item 400, “Excavation and Backfill for Structures.” Take special precautions in placing and compacting the backfill to avoid any movement or damage to the units. Bed precast units on foundations of firm and stable material accurately shaped to conform to the bases of the units.

3.3. **Placement of Precast Units**. Provide adequate means to lift and place the precast units. Fill lifting holes with mortar or concrete and cure. Precast concrete or mortar plugs may be used.

3.4. **Connections**. Make connections to new or existing structures in accordance with the details shown on the Design Documents. Furnish jointing material in accordance with Item 464, “Reinforced Concrete Pipe.”

Also remove a length of the existing pipe from the headwall to the joint when removing existing headwalls as shown on the Design Documents. Re-lay the removed pipe if approved, or furnish and lay a length of new pipe.

Item 471

47. Frames, Grates, Rings, and Covers

1. DESCRIPTION

Furnish and install frames, grates, rings, and covers for inlets, manholes, and other structures.

2. MATERIALS

2.1. **Frame, Grate, Ring, and Cover Castings**. Provide clean castings conforming to the shape and dimensions shown on the Design Documents. Ensure all gray and ductile iron castings conform to the AASHTO Designation M 306. Cast or machine the bearing surfaces for traffic service castings between manhole rings and covers and between grates and frames with such precision as to prevent rocking.

Provide gray iron castings in accordance with ASTM A48 Class 35B and AASHTO M 306 for traffic service applications. Provide gray iron castings in accordance with ASTM A48 Class 35B for sidewalk or pedestrian applications. Provide ductile iron castings in accordance with ASTM A536, Grade 70-50-05. Provide steel castings in accordance with ASTM A27, Grade 70-36. Ensure all traffic service castings and gratings meet or exceed the H20 proof-load requirements of AASHTO M 306. Load test results and material certifications must be made available upon request.

Ensure all traffic service (heavy duty) rated castings and grating meet the proof-load testing requirements of AASHTO M 306. Ensure all load tests are conducted with a calibrated NIST certified load cell. Ensure materials are loaded with a 9 × 9-in. load block to an applied load of 40,000 lb. for one minute without deformation or failure. Load test results and material certifications must be made available upon request.

Provide castings within ±1/16 in. per foot of plan dimensions, and within ±5% of plan weight.

2.2. **Welded Steel Grates and Frames**. Provide welded steel grates and frames as an assembly in accordance with the member size, dimensions, and details shown on the Design Documents. Fabricate these assemblies in accordance with Item 441, “Steel Structures.” Use steel that meets ASTM A36 or equivalent.

2.3. **Documentation**. Furnish a manufacturer’s certification stating the casting meets the proof-load testing requirements of AASHTO M 306 for traffic service castings.

3. CONSTRUCTION

Construct and install frames, grates, rings, and covers in accordance with the details shown on the Design Documents. Weld in accordance with Item 448, “Structural Field Welding.” Tack weld grates and covers to the frame or ring when directed.

Galvanize steel castings, welded steel grates, and frames in accordance with Item 445, “Galvanizing.” Galvanizing is not required for iron castings unless used in conjunction with structural steel shapes or shown on the Design Documents.

Provide galvanized bolts and nuts in accordance with Item 445, “Galvanizing.”

Item 472

48. Removing and Re-Laying Culvert

1. DESCRIPTION

Remove, transport, clean, and re-lay existing culvert and storm drain pipe.

2. MATERIALS

Bituminous coating must meet the requirements of Section 460.2.2., “Protective Coating.”

3. CONSTRUCTION

Culvert and storm drain pipe to be removed and re-laid shall be shown on the Design Documents. Remove debris and sediment within the culvert and storm drain pipe. Clean joints to facilitate proper re-laying. Install concrete pipe in accordance with Item 464, “Reinforced Concrete Pipe” Install corrugated metal pipe in accordance with Item 460, “Corrugated Metal Pipe.” Excavate, bed, and backfill in accordance with Item 400, “Excavation and Backfill for Structures.” Prevent damage to the pipe and fittings. Make connections to existing structures as shown on the Design Documents and in conformance to the requirements for connections as described in pertinent pipe specifications. Connect reinforced concrete pipe to corrugated metal pipe with a suitable concrete collar with a minimum thickness of 4 in.. Use a coating of bituminous material to insulate portions of aluminum pipe that are to be in contact with metal other than aluminum. Extend coating at least 1 ft. beyond area of contact. Mark the top and bottom of reinforced concrete pipe before removal and reinstall in the same position. Reuse headwall, aprons, or other appurtenances by severing from the culvert and moving to the new position if shown on the Design Documents. Make connections for joining sections of pipes in accordance with pertinent Items.

Replace any items designated for reuse with new material or restore them to previous condition, as approved. Developer may remove and dispose of existing structures and construct new structures in accordance with pertinent specifications and designs shown on the Design Documents.

Item 474

49. Linear Drains

1. DESCRIPTION

Furnish and install linear drains of the sizes and descriptions shown on the Design Documents as cast-in-place trench drain, precast trench drain, or slotted drain.

2. MATERIALS

Provide materials conforming to the pertinent requirements of the following Items:

2.1. **Cast-in-Place Trench Drain**. Provide a trench with a slope as shown on the Design Documents. Furnish forms capable of maintaining proper alignment during the concrete placement. Ensure connections to structures do not restrict the hydraulic flow of the trench drain. Use Class C Concrete conforming to Item 421, "Hydraulic Cement Concrete."

Furnish trench drain rails fabricated with structural steel meeting the requirements of ASTM A36, with a minimum cross-section of 2 × 2 × 3/16 in. Furnish trench drain rails with 1/4-in. minimum diameter steel anchoring rods at a maximum spacing of 20 in. between each rod, measured in the direction of travel, and a means for securing adjoining trench rails. Furnish steel that is galvanized per ASTM A123 after fabrication.

Fabricate trench drain grates from ductile iron in accordance with ASTM A536, Grade 65-45-12, and meet an AASHTO proof-load rating of AASHTO M 306. Provide galvanized grates per ASTM A123,after fabrication.

Furnish stainless grate retainers and rails that withstand the following loads:

- Vertical up-1,000 lbs
- Transverse-6,000 lbs
- Longitudinal-6,000 lbs

Furnish trench drain grates that have a minimum of 66% open space of total top surface area and are held in place with a non-rigid, four-point locking system in the four corners of the grate. Provide approved trench drain grate retaining devices that do not obstruct the flow area of the trench. Furnish removable trench grates.

Provide shop drawings sealed by a Registered Professional Engineer stating the trench drain system meets loading requirements. Submit documents showing design loadings if using a proprietary system.

Furnish documentation in accordance with Section 471.2.3., “Documentation.”

2.2. **Precast Trench Drains**. Furnish precast trench drains for TxDOT from pre-approved manufacturers in accordance with DMS-4370, “Precast Trench Drain.” TxDOT maintains a list of approved manufactures and their products. Unapproved precast trench drains will not be accepted.

Furnish materials conforming to the following where required.

- Item 420, "Concrete Substructures"
- Item 421, "Hydraulic Cement Concrete," Class C
- Item 440, "Reinforcement for Concrete"

2.3. **Slotted Drains**. Fabricate and furnish materials in accordance with Item 460, "Corrugated Metal Pipe" Furnish galvanized steel or aluminized steel (AASHTO M 36, Type 2) pipe with a minimum thickness of 16 gauge.

Slotted drains consist of a drain guide assembly attached to a longitudinal opening in a corrugated metal pipe. Fabricate slotted drains using either of the following drain guide assemblies.

2.3.1. **Type A**. Provide bearing bars and crossbar spacers meeting the requirements of ASTM A36, welded to the longitudinal opening in the corrugated metal pipe. Galvanize the drain guide assembly after fabrication in accordance with Item 445, "Galvanizing." Clean and repair welded areas and heat-affected zones in accordance with Section 445.3.5., "Repairs."

2.3.2. **Type B**. Machine-form the drain guide assembly from 14 gauge or thicker galvanized steel sheeting that meets the requirements of Item 460, "Corrugated Metal Pipe."

2.4. **Slotted Drain Outfalls**. Slotted drain outfalls consist of the corrugated metal pipe that connects the slotted drain to the main drainage line.

2.5. **Backfill**. Provide cement-stabilized backfill in accordance with Item 400, "Excavation and Backfill for Structures," or high-slump, low-strength concrete with a minimum of 180 lb. of cement per cubic yard.

3. CONSTRUCTION OF CASTIN PLACE TRENCH DRAINS

Perform excavation in accordance with Item 400, "Excavation and Backfill for Structures." Construct trench with a slope as shown on the Design Documents. Submit shop drawings that provide enough detail to ensure seamless installation of the trench drain adjacent to the proposed or existing pavement structure.

Provide shop drawings, if using a proprietary system, that contain the manufacturer's installation guidelines and any sequential order of construction. Construct the trench drain with a maximum allowable tolerance of ±1/16 in. for dimensional accuracy and rail co-planarity. Provide a smooth finish on the surface of the trench that will convey runoff. Make connections to new or existing structures as shown on the Design Documents.

Remove trench drain forms and dispose of properly. Install grates with retaining pins on each of the four corners. Remove all construction debris from the trench drain.

4. CONSTRUCTION OF PRECAST TRENCH DRAINS

Place precast trench drains in concrete pavement or encased in a concrete grade beam and subgrade designed to support H-20 wheel loading.

Perform excavation in accordance with Item 400, "Excavation and Backfill for Structures." Construct trench with a slope as shown on the Design Documents. Use interconnecting end

profiles on adjoining channels to maintain channel alignment within ± 1/16 in. Use non-sloping sections where shown on the Design Documents.

Assemble and install precast trench drains in accordance with approved shop drawings and manufacturer's recommendations at the locations directed on the Design Documents. Provide shop drawings containing the manufacturer's installation guidelines.

Encase precast trench drains, not cast in concrete pavement, in concrete grade beams, as shown on the Design Documents and suitable to support the trench drain and retain the trench grate from pull out. Ensure the grade and alignment of the installed grates matches the grade and alignment of the surrounding pavement.

Do not provide removable trench drain grates at any location where wheeled vehicles may drive over them including roadway lanes, shoulders, and driveways.

Remove all construction debris from the trench drain.

5. CONSTRUCTION OF SLOTTED DRAINS

Install slotted drains and slotted drain outfalls in accordance with details on the Design Documents and the requirements of Item 460, "Corrugated Metal Pipe." Excavate and backfill in accordance with Item 400, "Excavation and Backfill for Structures." Backfill trenches as shown on the Design Documents. Furnish slotted drains in 20-ft. lengths, minimizing the number of joints required.

Item 476

50. Jacking, Boring, or Tunnelling Pipe or Box

1. DESCRIPTION

Furnish and install pipe or box by jacking, boring, or tunneling.

2. MATERIALS

Use the following types of pipe or box:

- corrugated metal pipe meeting Item 460, "Corrugated Metal Pipe," of the size, type, design, and dimension shown on the Design Documents;
- reinforced concrete pipe meeting the special requirements for jacking, boring, or tunneling of Item 464, "Reinforced Concrete Pipe," of the size, strength, and dimension shown on the Design Documents;
- reinforced concrete box meeting Item 462, "Concrete Box Culverts and Drains," of the size and type shown on the Design Documents; or
- other types specified by the Design Documents.

3. CONSTRUCTION

Excavate suitable shafts or trenches for conducting the jacking, boring, or tunneling operations and for placing end joints of the pipe or box if the grade at the jacking, boring, or tunneling end is below the ground surface. Maintain a 3:1 slope from edge of pavement on the shaft side of the road. Provide a positive barrier when the shaft location is within the clear zone of the roadway. Protect excavations deeper than 5 ft. as specified in Item 402, "Trench Excavation Protection" or Item 403, "Temporary Special Shoring."

Install pipe or box so there is no interference with the operation of street, highway, railroad, or other facility and no embankment or structure is weakened or damaged.

Repair any pipe or box damaged in jacking, boring, or tunneling. Remove and replace any pipe or box damaged beyond repair.

Backfill shafts or trenches excavated to facilitate jacking, boring, or tunneling immediately after installation of pipe or box.

3.1. **Jacking**. Provide jacks suitable for forcing the pipe or box through the embankment. Use even pressure to all jacks during operation. Provide a suitable jacking head and suitable bracing between the jacks and the jacking head to apply uniform pressure around the ring of the pipe or circumference of the box. Use joint cushioning of plywood or other approved material. For plywood cushioning material, use 1/2-in. minimum thickness for pipe diameter 30 in. or less, and use 3/4-in. minimum thickness for pipe diameter greater than 30 in. Use 3/4-in. minimum thickness for all boxes. Use cushioning rings of single or multiple pieces. Provide a suitable jacking frame or backstop. Set the pipe or box to be jacked on guides that support the section of the pipe or box, and direct it on the proper line and grade. Place the entire jacking assembly in line with the

direction and grade of the pipe or box. In general, excavate the embankment material just ahead of the pipe or box, remove the material through the pipe or box, and force the pipe or box through the embankment with jacks into the space bored or tunneled.

Furnish a plan showing the proposed method of jacking for approval. Include the design for the jacking head, jacking support or backstop (thrust block), arrangement and position of jacks, and guides in the plan.

Ensure excavation for the underside of the pipe for at least 1/3 of the circumference of the pipe conforms to the contour and grade of the pipe. Ensure the excavation for the bottom slab of the box conforms to the grade of the box. Over-excavate, if desired, to provide no more than 2 in. of clearance for the upper portion and sides of the pipe or box. Taper this clearance to zero at the point where the excavation conforms to the contour of the pipe or box. Carry out jacking without interruption to prevent the pipe from becoming firmly set in the embankment. Monitor volume of soil excavated to avoid any appreciable over excavation. Pressure-grout any over excavation of more than 1 in. Pressure-grout between the carrier pipe and casing when shown on the Design Documents.

The distance the excavation extends beyond the end of the pipe or box must not exceed 2 ft. Decrease this distance as necessary to maintain stability of the material being excavated.

Jack the pipe or box from the low or downstream end. The final position of the pipe or box must not vary from the line and grade shown on the Design Documents by more than 1 in. in 10 ft. Variation must be regular and in one direction, and the final flow line must be in the direction shown on the Design Documents.

Use a shield or cutting edge of steel plate around the head end of the pipe or box extending a short distance beyond the end if desired. The minimum distance for parallel pipe or box jacking or tunneling is 3 ft. or 2 times the diameter of the pipe or width of box, whichever is greater.

3.2. **Boring or Tunneling**. Bore from a shaft in an approved location provided for the boring equipment and workmen.

Dispose of excavated material using an approved method. Use water or other appropriate drilling fluids in connection with the boring operation only as necessary to lubricate cuttings and pipe or box; do not use jetting.

Use a gel-forming colloidal drilling fluid consisting of high-grade, carefully processed bentonite to consolidate cuttings of the bit in unconsolidated soil formations. Seal the walls of the bore hole and furnish lubrication for subsequent removal of cuttings and immediate installation of the pipe.

Allowable variations from line and grade are specified in Section 476.3.1., “Jacking.” Pressure-grout any over excavation of more than 1 in.

3.2.1. **Larger Diameter Boring Methods.** Use the pilot hole or auger method for drainage and large utility borings. Pressure-grout any over excavation of more than 1 in. Pressure-grout between the carrier pipe and casing when shown on the Design Documents.

3.2.1.1. **Pilot Hole Method**. Bore a 2-in. pilot hole the entire length of the crossing, and check it for line and grade during the boring or tunneling operation on the opposite end of the bore from the work shaft. This pilot hole will serve as centerline for the larger diameter hole to be bored.

3.2.1.2. **Auger Method**. Use a steel encasement pipe of the appropriate diameter equipped with a cutter head to mechanically perform the excavation. Use augers of large enough diameter to convey the excavated material to the work shaft.

3.2.2. **Electrical and Communication Conduit Boring.** Limit over excavation to the dimensions shown in Table 1 for electrical and communication conduit borings. Increased boring diameters will be allowed for outer diameters of casing and couplings. Pressure-grouting will not be required for electrical and communication conduit borings.

Table 1

Allowable Bore Diameter for Electrical or Communication Conduit or Casing

Single Conduit Bores		**Multiple Conduit Bores**	
Conduit Size (in.)	Maximum Allowable Bore (in.)	Conduit Size (in.)[1]	Maximum Allowable Bore (in.)
2	4	4	6
3	6	5	8
4	6	6	10
6	10	7	12
		8	12

1. The diameter of multiple conduits is the sum of the outside diameter of the two largest conduits for placement of up to 4 conduits in one bore. Submit boring diameters for approval when more than 4 conduits are to be placed in a bore.

3.3. **Tunneling**. Use an approved tunneling method where the characteristics of the soil, the size of the proposed pipe, or the use of monolithic pipe would make the use of tunneling more satisfactory than jacking or boring, or when shown on the Design Documents.

Ensure the lining of the tunnel is strong enough to support the overburden when tunneling is permitted. Submit the proposed liner method for approval. Approval does not relieve Developer of the responsibility for the adequacy of the liner method.

Pressure-grout the space between the liner plate and the limits of excavation.

Pressure-grout between the carrier pipe and liner plate when shown on the Design Documents.

3.4. **Joints**. Make joints by field bolting or connecting bands, whichever is feasible if corrugated metal pipe is used. Make the joints in accordance with Item 464, “Reinforced Concrete Pipe” if reinforced concrete pipe is used. Make the joints in accordance with Item 462, “Concrete Box Culverts and Drains” if reinforced concrete box is used.

Item 479

51. Adjusting Manholes and Inlets

1. DESCRIPTION

Adjust or cap existing manholes or inlets. Drainage junction boxes will be classified as manholes.

2. MATERIALS

Reuse removed manhole and inlet rings, plates, grates, and covers if they are in good condition as determined by TxDOT. Provide additional materials in accordance with Item 465, “Manholes and Inlets.”. Use single- or multiple-piece prefabricated metal, polymer, plastic, or rubber extension rings for the adjustment of manholes as approved. Limit the height of flexible extension rings to 3 in. Provide concrete that meets Item 421, “Hydraulic Cement Concrete.”

Ensure frames and grates, or rings and covers, above grade are of single-piece cast iron manufactured in compliance with Item 471, “Frames, Grates, Rings, and Covers.” Provide steel riser material compliant with ASTM A36. Provide steel adjustable risers that include a stainless steel adjustable stud with positive lock that adjusts the diameter ±3/8 in. Provide steel risers that include a minimum of 3 allen head set screws that lock the riser to the manhole or catch basin frame. Ensure seating surfaces are flat and true and provide a non-rocking seating surface.

3. CONSTRUCTION

Perform all Work in accordance with Item 465, “Manholes and Inlets.” Excavate and backfill in accordance with Item 400, “Excavation and Backfill for Structures.” Carefully remove manhole and inlet rings, covers, plates, and grates to be reused. Clean mortar and grease from the contact areas of all reused items. Dispose of unused removed material. Use construction methods described in Section 479.3.1., “Lowering the Top of a Manhole or Inlet,” and Section 479.3.2., “Raising the Top of a Manhole or Inlet.”

3.1. **Lowering the Top of a Manhole or Inlet**. Remove a sufficient depth of brick courses or concrete to permit reconstruction on a batter not exceeding 1 in. horizontal to 2 in. vertical. Clean the mortar from the top course of brick where brickwork is present. Rebuild the manhole or inlet to the original top dimensions or to the dimensions shown on the Design Documents. Install the manhole or inlet ring and the cover, plate, or grate to conform to the proposed new surface contour.

3.2. **Raising the Top of a Manhole or Inlet**. Clean the top surface of brick or concrete. Construct to the proper new elevation using new rubber extension rings, concrete rings, or Class A concrete. Provide rubber manhole and catch basin risers of minimum 80% by weight recycled rubber and minimum 10% by volume recycled RFL coated fiber. Provide rubber manhole and catch basin adjustment risers that are of uniform quality, free from cracks, holes, and any other surface defects. Construction must be suitable for AASHTO H20 live loads. Load certifications for materials shall be made available upon request. Install the manhole or inlet ring and the cover, plate, or grate to conform to the proposed new surface contour. Install prefabricated extension rings in accordance with manufacturer’s instructions.

3.3. Capping an Inlet or Manhole. Remove the inlet or manhole to a minimum of 1 ft. below subgrade elevation. Cap as shown on the Design Documents.

Item 480

52. Cleaning Existing Culverts

1. DESCRIPTION

Remove all extraneous material from existing culvert barrels and pipes.

2. WORK METHODS

Expose all inside surfaces of the specified culverts. Do not move or damage the culvert. Dispose of material in accordance with federal, State, and local regulations. Place on roadway slopes when approved.

Perform cleaning to maintain drainage during construction.

Item 481

53. Pipe for Drains

1. DESCRIPTION

Furnish and install pipe for drains.

2. MATERIALS

Furnish polyvinyl chloride (PVC) pipe meeting the requirements of ASTM D1785, Schedule 40, and furnish PVC fittings meeting the requirements of ASTM D2466. PVC pipe and fittings meeting the requirements of ASTM D3034, Type SDR 35 may be used for installations encased in concrete or buried in soil.

Furnish a manufacturer's certification stating the material meets the appropriate ASTM specification.

Furnish pipe marked with:

- manufacturer's name or trademark and code;
- nominal size;
- PVC cell classification (example: 12454-B);
- schedule, size, or other legend (example: SDR-35 PVC Sewer Pipe); and
- specification designation (example: ASTM D1785).

Furnish fittings marked with:

- manufacturer's name or trademark;
- nominal size;
- material designation (example: PVC);
- schedule, size, or other legend (example: Schedule 40); and
- specification designation (example: ASTM D3034).

Furnish solvent meeting the requirements of ASTM D2564 for solvent-welding of fittings.

Provide other types of pipe and fittings as indicated.

Provide fittings, hangers, clamps, straps, anchors, and guard plates in accordance with the details shown on the Design Documents.

3. CONSTRUCTION

Excavate and backfill for pipe installation in accordance with Item 400, "Excavation and Backfill for Structures." Install pipe as shown on the Design Documents. Solvent-weld all fittings, including splice fittings, to provide a watertight fit. Do not splice straight sections of pipe at intervals shorter than 20 ft.

Degrease all exposed PVC pipe and fittings, and apply an acrylic water-based primer followed by a coating of the same color used for adjacent concrete surface.

Follow manufacturer's specifications for installation of other types of pipe (material other than PVC) when indicated.

Item 483

54. Concrete Bridge Deck Surfacing

1. DESCRIPTION

Surface concrete bridge deck as specified to provide prepared substrate for concrete overlay or to remediate a finished surface.

2. EQUIPMENT

Use equipment within the maximum allowed legal load or provide analysis showing equipment will not overstress the bridge. Use machines equipped with dust controls measures and shielding to prevent flying debris from leaving the work area.

2.1. **Milling**. Use concrete milling equipment capable of maintaining constant depth of cut as specified. Equip machine with automated debris collection system.

2.2. **Hydro-Demolition**. Use equipment consisting of ultra-high pressure water jets (>10,000 psi) capable of removing concrete to depth specified. Provide machine that can to be calibrated to remove an incremental depth of uniform strength concrete.

2.3. **Shot Blasting**. Use self-propelled shot blasting equipment utilizing steel abrasive being propelled at the concrete surface and equipped with a self-contained vacuum system to collect all removed debris.

2.4. **Diamond Grinding**. Use self-propelled diamond grinding equipment capable of removing concrete surface and producing corduroy type texture. Provide machine equipped with dual longitudinal controls capable of operating on both sides automatically from any longitudinal grade reference and have cutting wheel containing 50 to 60 diamond blades per foot. Minimize dust escaping into environment by equipping machine with self-contained vacuum system to collect all debris removed.

2.5. **Saw Grooving**. Use sawing equipment capable of cutting grooves in completed bridge slabs and top slabs of direct traffic culverts. Provide grooves that are 1/8 to 3/16 in. deep, nominally 1/8 in. wide, and spaced at 1 in. Use sawing equipment capable of cutting grooves in hardened concrete to within 18 in. of the barrier rail or curb.

3. CONSTRUCTION

Protect bridge joints, drains, and other appurtenances from surfacing operations. Following surfacing, clean the surface to remove all cuttings and debris. Dispose of all cuttings and debris properly.

Use chipping tools and other smaller approved concrete surfacing equipment in small areas not accessible to the large surfacing equipment.

Approval to begin Work is not an endorsement of proposed equipment. If equipment fails to meet specification requirements, replace equipment.

Perform concrete bridge deck surfacing as specified in accordance with the following listed methods:

3.1. Milling. Mill the existing deck to remove concrete to the depth specified. Provide a uniformly rough surface with a chipped appearance suitable for bonding a concrete overlay. Scarify at locations shown on the Design Documents to the depths shown on the Design Documents. Measure the depth from the level of the existing surface to the high points on the scarified surface.

Ensure damage does not occur to the bridge slab reinforcing steel, armored joints, slab joints, drainage hardware, and other appurtenances. Stop milling operations if reinforcing steel is encountered. Proceed with further milling only when approved to do so.

Establish and maintain independent grade control for concrete scarifying operations when appropriate or required.

Use chipping tools to remove concrete in small areas not accessible to the mechanical scarifier.

3.2. **Hydro-Demolition**. Submit for approval water disposal plan associated with the Work. Follow all water disposal requirements per federal, State, and local Law. Temporarily plug all bridge drains near the area of work to prevent runoff as a result of the Work from being released. Protect surrounding property and traffic from water spray and material dislodged.

Demonstrate hydro-demolition on test areas as designated to calibrate machine to obtain concrete removal depth and finish as specified and as approved. At a minimum, calibrate machine to remove all unsound concrete and sound concrete to the specified depth.

Remove additional concrete to obtain a minimum of 3/4” around the bars by hydro-demolition or other approved method if reinforcing steel is exposed.

Stop and recalibrate machine when depth of removal or surface roughness is different than approved.

3.3. **Shot Blasting**. Demonstrate shot blasting on test areas as designated to calibrate machine to obtain depth of surface removal required and to obtain finish as specified and as approved.

Do not alter grade or cross slope.

Maintain and adjust machine calibration to produce surfacing required.

3.4. **Diamond Grinding**. Demonstrate diamond grinding on designated area and obtain approval of finish produced.

Perform grinding in longitudinal direction. Grind surfaces on both sides of transverse joints to be flush (same elevation). Eliminate minor depressions by extra grinding.

Produce a uniform surface with a longitudinal corduroy type texture that eliminates joint and crack faults. Maintain transverse cross slope to provide drainage across surface.

Repeat grinding until surface grade and cross slope satisfies ride requirements. Minimum ride requirements are 1/4 in. in 10 ft.

Saw-cut transversely the ground areas to provide grooved surface in accordance with Section 483.3.5., "Sawing Grooving."

3.5. **Sawing Grooving**. Cut grooves into concrete surface perpendicular to the structure centerline. Cut grooves across the slab to within 18 in. of the barrier rail, curb, or median divider. At skewed metal expansion joints in bridge slabs, adjust groove cutting by using narrow-width cutting heads so all grooves end within 6 in. of the joint, measured perpendicular to the centerline of the metal joint. Leave no ungrooved surface wider than 6 in. adjacent to either side of the joint. Ensure the minimum distance to the first groove, measured perpendicular to the edge of the concrete joint or from the junction between the concrete and the metal leg of the joint, is 1 in. Cut grooves continuously across construction joints or other joints in the concrete less than 1/2 in. wide. Apply the same procedure described above where barrier rails, curbs, or median dividers are not parallel to the structure centerline to maintain the 18-in. maximum dimension from the end of the grooves to the gutter line. Cut grooves continuously across formed concrete joints.

Item 496

55. Removing Structures

1. DESCRIPTION

Remove and either dispose of or salvage structures.

2. CONSTRUCTION

2.1. **Demolition Construction Documents**. Follow the demolition sequence shown on the Design Documents for bridge structures to be removed, or submit a demolition Construction Document if indicated on the Design Documents. Include in the required demolition plan the type and location of equipment to be used, the method and sequence of removal of the structural Elements, and a narrative indicating the stability of the partially demolished structure is maintained throughout the demolition process. Have these Construction Documents signed and sealed by a Registered Professional Engineer when demolished structure intersects active roadways and as otherwise shown on the Design Documents. Submit required demolition Construction Documents at least 14 Days before starting Work. TxDOT approval of these Construction Documents is not required, but TxDOT reserves the right to request modifications to the Construction Documents when Work could affect the safety of the traveling public and when around other transportation facilities to remain in place. Notify TxDOT 30 Days before starting any bridge demolition Work to allow for required notifications to other agencies.

2.2. **Removal.**

2.2.1. **Pipes**. Avoid damaging appurtenances determined to be salvageable.

2.2.2. **Concrete, Brick, or Stone Structures**. Portions of structures that will not interfere with the proposed construction may remain in place 2 ft. or more below the permanent ground line. Square off remaining structures and cut reinforcement flush with the surface of the concrete.

2.2.3. **Steel Structures**. Dismantle steel to be retained by TxDOT or re-erected by cold-cutting fastener heads and punching or drilling the remaining portion of the fastener, air-arc gouging welded connections, and flame-cutting beams along a straight line. Cut beams at the locations shown on the Design Documents. Match-mark steel to be re-erected with paint in accordance with the erection drawings. Remove steel piles or cut off 2 ft. or more below the permanent ground line.

2.2.4. **Timber Structures**. Remove all fasteners from timber determined to be salvageable. Remove timber piles or cut off 2 ft. or more below the permanent ground line.

2.3. **Salvage**. Avoid damage to materials shown on the Design Documents to be salvaged. Deliver materials to be retained by TxDOT to the location shown on the Design Documents. Block up salvaged steel materials off the ground.

2.4. **Disposal**. Material removed that is not deemed to be salvageable is the property of Developer. Dispose of removed material off the right of way in accordance with federal, State, and local regulations.

2.5. **Backfill**. Backfill excavation and voids to the original ground line if resulting from the removal of structures. Place backfill that will support any portion of the roadbed or embankment to the same

requirements for placing embankment. Backfill other areas in 10 in. layers, loose measurement, and compact to the density of adjacent undisturbed material.

Item 499

56. Adjusting Steel Shoes

1. DESCRIPTION

Adjust and reset steel shoes as shown on the Design Documents.

2. CONSTRUCTION

Remove the existing welds between the shoes and the girder flanges by arc-air gouging. Loosen or remove anchor bolt nuts as required to allow free vertical movement before raising. Jack the girders up to free the shoes and allow the pin between the top and bottom bolsters to rotate freely. Drive out the pin if it does not rotate freely, then clean and lubricate it before reinstalling. Reset the shoes relatively plumb for a temperature of 70°F. Lower the girders and reweld the shoes in this position. Use the same weld size as the original weld. Weld and grind smooth any excess gouges caused by weld removal. Grind any original weld metal not removed by arc-air gouging. Grind all exposed corners to a 1/16-in. radius.

Use jacks with a capacity adequate to raise the girders free of the shoes without exceeding a bearing pressure on the concrete cap of 1,500 psi. Use jacks with a capacity of at least 1.5 times the shoe design load. Repair any concrete spalls caused by Developer's operations in accordance with Item 429, "Concrete Structure Repair."

Replace any shoes or parts of shoes as shown on the Design Documents. Repair or replace anchor bolts, nuts, or other steel Elements damaged during the shoe adjustment in accordance with Item 442, "Metal for Structures," and Item 448, "Structural Field Welding."