Traffic Noise Analysis Technical Report

Loop 1604 from SH 16 to I-35

Bexar County, Texas

CSJs: 2452-02-083, 2452-03-087, 2452-03-113, and 0072-08-144

July 2020

The environmental review, consultation, and other actions required by applicable Federal environmental laws for this project are being, or have been, carried-out by TxDOT pursuant to 23 U.S.C. 327 and a Memorandum of Understanding dated December 9, 2019, and executed by FHWA and TxDOT.

Table of Contents

Traffic Noise 1
Introduction 1
Traffic Noise Analysis 2
List of Preparers 13
References 13

List of Tables

Table 1: FHWA Noise Abatement Criteria 2
Table 2: Traffic Noise Levels (dB(A) Leq) 3
Table 3: Noise Barrier Proposal 11
Table 4: Predicted Noise Impact Contours 11

Appendices

Appendix A: Figures

Appendix B: Traffic Data

Appendix C: Traffic Calculations

Appendix D: Noise Receiver and Non-Feasible Barrier Locations

Traffic Noise

Introduction

This technical report identifies and assesses traffic noise impacts associated with the proposed improvements to Loop 1604 in Bexar County, Texas.

The Texas Department of Transportation (TxDOT) is proposing improvements to Loop 1604 from State Highway (SH) 16 to Interstate Highway (I-) 35 in Bexar County, Texas. The project is approximately 23 miles in length and would not include any toll components. The proposed project is located in northern Bexar County as shown on **Figure 1**, **Project Location Map** in **Appendix A**.

The existing Loop 1604 facility primarily consists of two 12-foot-wide general-purpose lanes in each direction, with 4-foot inside and 10-foot outside shoulders, separated by a 36- to 64-foot grass ditch median. These lanes operate as a controlled access facility with mainline access gained through ramps from the frontage roads between cross streets. The existing Loop 1604 ROW varies from 330 to 550 feet in width.

The proposed project would expand Loop 1604 from a four-lane expressway to a ten-lane expressway. The proposed project would include two high-occupancy vehicle (HOV) special purpose lanes (one in each direction) and eight general use lanes (four in each direction). The proposed improvements include continuous sidewalks and bike accommodations along the entire length of the project. No new ROW or permanent easements would be required.

The traffic data used in the noise analysis is included in **Appendix B**. TxDOT prepared anticipated average daily traffic volumes and turning movements for baseline (2018) and proposed (2045) conditions though their sub-consultant JACOBS Engineering Group Inc. (JACOBS). Their methodology is outlined in a memorandum to TxDOT titled "Loop 1604 Traffic Projections Methodology" dated May 23, 2019. Line diagrams based on the 60 percent design schematic were provided to TxDOT on June 28, 2019. AECOM, in conjunction with TxDOT, made adjustments to the traffic volumes to account for changes to the schematic subsequent to the 60 percent submittal. The revised line diagrams were approved by TxDOT. The existing 2018 and 2045 traffic volumes have been included in **Appendix B**.

Subsequent to the completion of noise modeling for the project, TxDOT removed proposed HOV lanes (one in each direction) along I-10 north of LP 1604. Due to inconsistencies with the Alamo Area Metropolitan Planning Organization (MPO) plans and models, the proposed project would not include the extension of HOV lanes currently being constructed by another project south of Camp Bullis Road. The previously planned HOV lanes would be replaced with widened inside shoulders which could accommodate the extension of HOV lanes in the future. The total distance of HOV lanes along I-10 north of LP 1604 that would be removed from the project is approximately 1.8 miles.

There are seven noise receivers (R25 – R31) located along I-10 north of LP 1604. Of these receivers, R30 and R31 are located outside of the limits of the HOV design change and would not be affected by the change. Design year traffic volumes for I-10 were provided by TxDOT and HOV volumes were backed out of the design year traffic using an approximate 10 percent allocation factor. Without the HOV lanes, the design year HOV traffic volumes would be redistributed back to the main lanes with no change to the overall design year traffic volume along I-10. Since HOV peak hourly traffic volumes within the design change limits varied from 174 to 625 vehicles per hour, this change would result in a slight increase for the mainlane traffic volumes after the reallocation. With the design change and slightly higher mainlane traffic volumes, it is possible that noise levels at adjacent receiver locations along I-10 could increase by up to 1 dBA. Predicted noise levels at most of the adjacent receiver

locations are approximately 4 dBA to 8 dBA below the Noise Abatement Criteria (NAC) impact threshold and the impact status would not be affected by the change. The predicted noise level at R29 (Restaurant) is at the NAC (72 dBA) and this receiver was already included in the noise barrier evaluation analysis. A slightly higher noise level at this receiver would not change the barrier analysis result that a noise barrier at this location would not be both feasible and reasonable per TxDOT noise policy and thus would not be recommended for incorporation into the project. Therefore, further noise modeling of the I-10 HOV design change was not performed.

Traffic Noise Analysis

Traffic noise impacts for the proposed project were evaluated in accordance with the most current Federal Highway Administration (FHWA) policy and procedures, and the TxDOT (FHWA approved) *Guidelines for Analysis and Abatement of Roadway Traffic Noise* (TxDOT, 2011).

Sound from highway traffic is generated primarily from a vehicle's tires, engine and exhaust. It is commonly measured in decibels and is expressed as "dB." Sound occurs over a wide range of frequencies; however, not all frequencies are detectable by the human ear. Therefore, an adjustment is made to the high and low frequencies to approximate the way an average person hears traffic sounds. This adjustment is called A-weighting and is expressed as "dB(A)".

Also, because traffic sound levels are never constant due to the changing number, type and speed of vehicles, a single value is used to represent the average or equivalent sound level and is expressed as "Leq."

A traffic noise analysis typically includes the following elements:

- Identification of land use activity areas that might be impacted by traffic noise
- Determination of existing noise levels and prediction of future noise levels
- Identification of possible noise impacts
- Consideration and evaluation of measures to reduce noise impacts

The FHWA has established the following NAC for various land use activity areas that are presented in **Table 1**. These criteria are used as one of two methods to determine when a traffic noise impact would occur.

Table 1: FHWA Noise Abatement Criteria

Activity Category	FHWA dB(A) Leq	Description of Land Use Activity Areas
A	57 (exterior)	Lands on which serenity and quiet are of extra-ordinary significance and serve an important public need and where the preservation of those qualities is essential if the area is to continue to serve its intended purpose.
B	67 (exterior)	Residential
C	67 (exterior)	Active sport areas, amphitheaters, auditoriums, campgrounds, cemeteries, day care centers, hospitals, libraries, medical facilities, parks, picnic areas, places of worship, playgrounds, public meeting rooms, public or nonprofit institutional structures, radio studios, recording studios, recreation areas, Section 4(f) sites, schools, television studios, trails, and trail crossings

Activity Category	FHWA dB(A) Leq	Description of Land Use Activity Areas
D	52 (interior)	Auditoriums, day care centers, hospitals, libraries, medical facilities, places of worship, public meeting rooms, public or nonprofit institutional structures, radio studios, recording studios, schools, and television studios
E	72 (exterior)	Hotels, motels, offices, restaurants/bars, and other developed lands, properties, or activities not included in A-D or F
F	--	Agricultural, airports, bus yards, emergency services, industrial, logging, maintenance facilities, manufacturing, mining, rail yards, retail facilities, shipyards, utilities (water resources, water treatment, electrical), and warehousing
G	--	Undeveloped lands that are not permitted

Source: TxDOT, 2011

A noise impact occurs when either the absolute or relative criterion is met.

Absolute Criterion: the predicted noise level at a receiver approaches, equals or exceeds the NAC. "Approach" is defined as one dB(A) below the FHWA NAC. For example, a noise impact would occur at a Category B residence if the noise level is predicted to be 66 dB(A) or above.

Relative Criterion: the predicted noise level substantially exceeds the existing noise level at a receiver even though the predicted noise level does not approach, equal or exceed the NAC. “Substantially exceeds” is defined as more than 10 dB(A). For example, a noise impact would occur at a Category B residence if the existing level is 54 dB(A) and the predicted level is 65 dB(A).

When a traffic noise impact occurs, noise abatement measures must be considered. A noise abatement measure is any positive action taken to reduce the impact of traffic noise on an activity area.

The FHWA traffic noise modelling software (TNM 2.5) was used to calculate existing and predicted traffic noise levels at receiver locations along the proposed project corridor. The receiver locations are listed in **Table 2** and are shown on **Figure 2**, **Noise Receiver and Barrier Locations** in **Appendix A.** The receivers represent land use activity areas adjacent to or nearby the proposed project that may be impacted by traffic noise and potentially benefit from feasible and reasonable noise abatement. The TNM software primarily considers the number, type and speed of vehicles; roadway alignment and grade; cuts, fills and natural berms; surrounding terrain features; and the locations of activity areas likely to be impacted by the associated traffic noise.

Table 2: Traffic Noise Levels (dB(A) Leq)

Representative Receiver	NAC Category	NAC Level	Existing	Predicted 2045	Change (+/-)	Noise Impact (Y/N)
R1 Restaurant	E	72	66	68	+2	N
R2 Restaurant	E	72	66	67	+1	N
R3 Restaurant	E	72	64	65	+1	N
R4 Medical Facility - interior	D	52	40	40	0	N

Representative Receiver	NAC Category	NAC Level	Existing	Predicted 2045	Change (+/-)	Noise Impact (Y/N)
R5 Apartments	B	67	68	67	-1	Y
R6 Apartments	B	67	71	71	0	Y
R7 Apartments	B	67	72	74	+2	Y
R8 Residence	B	67	62	64	+2	N
R9 Apartments	B	67	61	62	+1	N
R10 Recreation Area	C	67	59	63	+4	N
R11 Apartments	B	67	64	65	+1	N
R12 Hospital - interior	D	52	40	41	+1	N
R13 Restaurant	E	72	66	68	+2	N
R14 Hospital - interior	D	52	40	42	+2	N
R15 Medical Facility - interior	D	52	41	43	+2	N
R16 Restaurant	E	72	68	70	+2	N
R17 Apartments	B	67	62	64	+2	N
R18 Apartments	B	67	63	65	+2	N
R19 Hotel Pool	E	72	40	42	+2	N
R20 Hotel Pool	E	72	65	67	+2	N
R21 Recreation Area	C	67	61	62	+1	N
R22 Restaurant	E	72	67	69	+2	N
R23 Church Playground	C	67	60	63	+3	N
R24 Apartments	B	67	70	73	+3	Y
R25 Hotel Pool	E	72	63	64	+1	N
R26 Restaurant	E	72	64	65	+1	N
R27 Restaurant	E	72	65	67	+2	N
R28 Medical Facility - interior	D	52	42	46	+4	N
R29 Restaurant	E	72	69	72	+3	Y
R30 Restaurant	E	72	69	70	+1	N
R31 Church Playground	C	67	57	59	+2	N
R32 Hospital - interior	D	52	41	43	+2	N
R33 Restaurant	E	72	67	70	+3	N
R34 Restaurant	E	72	65	68	+3	N
R35 Church - interior	C	67	36	40	+4	N

Representative Receiver	NAC Category	NAC Level	Existing	Predicted 2045	Change (+/-)	Noise Impact (Y/N)
R36 Residence	B	67	61	63	+2	N
R37 Playground	C	67	70	72	+2	Y
R38 Church - interior	D	52	44	46	+2	N
R39 Hospital - interior	D	52	42	41	-1	N
R40 Recreation Area	C	67	68	68	0	Y
R41 Restaurant	E	72	69	69	0	N
R42 Restaurant	E	72	67	68	+1	N
R43 Apartments	B	67	69	70	+1	Y
R44 Apartments	B	67	70	71	+1	Y
R45 Restaurant	E	72	65	66	+1	N
R46 Senior Center – outdoor patio	B	67	50	53	+3	N
R47 Apartments	B	67	69	73	+4	Y
R48 Apartments	B	67	69	72	+3	Y
R49 Apartments	B	67	69	72	+3	Y
R50 Apartments	B	67	66	67	+1	Y
R51 Apartments	B	67	70	71	+1	Y
R52 Medical Facility - interior	D	52	39	40	+1	N
R53 Athletic Field	C	67	60	62	+2	N
R54 Restaurant	E	72	63	67	+4	N
R55 Athletic Field	C	67	60	63	+3	N
R56 Church - interior	D	52	34	36	+2	N
R57 Restaurant	E	72	66	67	+1	N
R58 Residence	B	67	60	62	+2	N
R59 Athletic Field / Playground	C	67	62	63	+1	N
R60 School - interior	D	52	31	34	+3	N
R61 Restaurant	E	72	64	64	0	N
R62 Restaurant	E	72	66	65	-1	N
R63 Restaurant	E	72	65	65	0	N
R64 Restaurant	E	72	73	72	-1	Y
R65 Golf Course	C	67	63	65	+2	N
R66 Restaurant	E	72	65	66	+1	N

Representative Receiver	NAC Category	NAC Level	Existing	Predicted 2045	Change (+/-)	Noise Impact (Y/N)
R67 Auditorium - interior	D	52	42	46	+4	N
R68 Restaurant	E	72	66	70	+4	N
R69 Restaurant	E	72	68	71	+3	Y
R70 Restaurant	E	72	68	69	+1	N
R71 Restaurant	E	72	70	71	+1	Y
R72 Restaurant	E	72	67	70	+3	N
R73 Funeral Home - interior	D	52	39	41	+2	N
R74 Church - interior	D	52	42	41	-1	N
R75 Church & School - interior	D	52	42	43	+1	N
R76 Restaurant	E	72	68	68	0	N
R77 Restaurant	E	72	68	68	0	N
R78 Restaurant	E	72	60	60	0	N
R79 Church - interior	D	52	28	32	+4	N
R80 Funeral Home - interior	D	52	36	36	0	N
R81 Residence	B	67	62	62	0	N
R82 Residence	B	67	62	63	+1	N
R83 Residence	B	67	64	65	+1	N
R84 Residence	B	67	67	70	+3	Y
R85 Residence	B	67	64	66	+2	Y
R86 Residence	B	67	62	65	+3	N
R87 Residence	B	67	60	63	+3	N
R88 Residence	B	67	63	63	0	N
R89 Apartments	B	67	59	62	+3	N
R90 Residence	B	67	61	63	+2	N
R91 Residence	B	67	62	63	+1	N
R92 Residence	B	67	59	60	+1	N
R93 Restaurant	E	72	67	67	0	N
R94 Restaurant	E	72	66	66	0	N
R95 Medical Treatment Center	B	67	59	60	+1	N
R96 Medical Treatment Center	B	67	59	62	+3	N
R97 Medical Treatment Center	B	67	62	65	+3	N

Representative Receiver	NAC Category	NAC Level	Existing	Predicted 2045	Change (+/-)	Noise Impact (Y/N)
R98 Apartments	B	67	67	69	+2	Y
R99 Apartments	B	67	66	68	+2	Y
R100 Apartments	B	67	67	70	+3	Y
R101 Church - interior	D	52	40	41	+1	N
R102 Church Outdoor Pavilion	C	67	60	62	+2	N
R103 Church Playground	C	67	55	57	+2	N
R104 Church Playground	C	67	52	54	+2	N
R105 Restaurant	E	72	69	70	+1	N
R106 Apartments	B	67	62	63	+1	N
R107 Apartments	B	67	62	65	+3	N
R108 Apartments	B	67	64	66	+2	Y
R109 Apartments	B	67	71	73	+2	Y
R110 Apartments	B	67	70	71	+1	Y
R111 Church Playground	C	67	57	58	+1	N
R112 Residence	B	67	67	68	+1	Y
R113 Residence	B	67	71	71	0	Y
R114 Restaurant	E	72	60	63	+3	N
R115 Restaurant	E	72	64	68	+4	N
R116 Playground	C	67	61	64	+3	N
R117 Recreation Area	C	67	60	62	+2	N

As indicated in **Table 2**, the proposed project would result in traffic noise impacts at some of the receiver locations; therefore, the construction of noise barriers was considered.

Before any noise abatement measure can be proposed for incorporation into the project, it must be both feasible and reasonable. To be “feasible,” the abatement measure must be able to reduce the noise level at greater than 50 percent of impacted, first row receivers by at least 5 dB(A). To be “reasonable,” the abatement measure must not exceed the cost-effectiveness criterion of $25,000 for each receiver that would benefit by a reduction of at least 5 dB(A), and the abatement measure must be able to reduce the noise level for at least one impacted, first row receiver by at least 7 dB(A).

Noise walls were evaluated for each of the impacted receiver locations. Noise barriers at the following receivers did not meet the noise reduction or cost requirements and are not proposed at these locations:

R24 – This receiver represents 10 multi-family units with balconies facing I-10 at the Pecan Springs Apartments located adjacent to the northbound I-10 frontage road north of Pecan Springs Road (**Appendix D, Figure 3, Map 2 of 11**). A continuous noise barrier approximately 253 feet long and placed along the edge of the I-10 right-of-way from north of Pecan Springs Road to the north apartment property line was evaluated for these receivers. The results of the modelling showed that at 20 feet high, two ground-floor receivers would achieve the minimum feasible noise reduction of 5 dB(A); however, no receiver would achieve the noise reduction design goal of at least 7 dB(A). Therefore, a noise barrier at this location is not proposed for incorporation into the project.

R29 – This receiver represents an outdoor dining area at the Panera Bread restaurant located at the southeast corner of the northbound I-10 frontage road and Worth Parkway (**Appendix D, Figure 3, Map 3 of 11**). A continuous noise barrier approximately 249 feet long placed along the edge of the I-10 right-of-way from south of Worth Parkway to the south restaurant property line was evaluated for this receiver. The results of the modelling showed that at 20 feet high, the noise barrier would not achieve the minimum feasible noise reduction of 5 dB(A) at this receiver; therefore, a noise barrier at this location is not proposed for incorporation into the project.

R37 – This receiver represents an outdoor playground and sports court area at the Ridge shopping development located along the westbound Loop 1604 frontage road between NW Military Highway and Vance Jackson Road (**Appendix D, Figure 3, Map 4 of 11**). A continuous noise barrier approximately 402 feet long placed along the edge of the Loop 1604 right-of-way from west of the central access driveway to the development to the west property line was evaluated for this receiver. The results of the modelling showed that at 20 feet high, the receiver would achieve the minimum feasible noise reduction of 5 dB(A); however, the noise reduction design goal of at least 7 dB(A) would not be achieved. Therefore, a noise barrier at this location is not proposed for incorporation into the project.

R40 – This receiver represents two outdoor tennis courts at the Shavano Park Tennis Club located adjacent to the eastbound Loop 1604 frontage road and west of NW Military Highway (**Appendix D, Figure 3, Map 5 of 11**). In this location, a noise barrier could not be constructed at the Loop 1604 right-of-way due to the presence of an existing drainage feature and wetlands. Therefore, a continuous noise barrier approximately 162 feet long was evaluated for this receiver placed along the edge of the Loop 1604 eastbound frontage road from west of an access road to an adjacent convenience store to the west of the Shavano Park Tennis Club property line. The results of the modelling showed that at 20 feet high, the noise barrier would not achieve the minimum feasible noise reduction of 5 dB(A) at this receiver; therefore, a noise barrier at this location is not proposed for incorporation into the project.

R43 and R44 – These receivers represent the Hilltop at Shavano Apartments located on the westbound side of Loop 1604 east of NW Military Highway with 27 impacted first, second, and third floor units in four buildings with patios and balconies that face toward Loop 1604 (**Appendix D, Figure 3, Map 6 of 11**). The apartment complex is located approximately 20 to 30 feet higher in elevation than the Loop 1604 roadway. A continuous noise barrier approximately 1,052 feet long was placed along the edge of the Loop 1604 right-of-way within the property limits. The results of the modelling showed that at a barrier height of 20 feet, nine first floor receivers would achieve the minimum feasible noise reduction of 5 dB(A), and seven units would achieve the noise reduction design goal of at least 7 dB(A). However, the noise barrier would not be feasible according to TxDOT noise policy because the barrier would not achieve a noise reduction of at least 5 dB(A) at greater than 50 percent of first row impacted receptors. In addition, the total cost of the barrier at $378,720, or $42,080 per benefited receiver, would exceed the reasonable, cost-effectiveness criterion of $25,000 per benefitted receiver. Therefore, a noise barrier at this location is not proposed for incorporation into the project.

R50 and R51 – These receivers represent The Villas at Rogers Ranch Apartments located on the westbound side of Loop 1604 west of Rogers Ranch Road with 14 impacted first, second, and third floor units in two buildings with patios and balconies that face toward Loop 1604 (**Appendix D, Figure 3, Map 7 of 11**). Two barriers were evaluated for these receivers. A noise barrier approximately 209 feet long was placed along the edge of the Loop 1604 right-of-way beginning at the eastern property line and extending to the west to the edge of a bridge abutment associated with an existing large drainage feature. A second noise barrier approximately 595 feet long was placed along the edge of the westbound Loop 1604 frontage road. The results of the modelling showed that at a height of 20 feet for both barrier segments, five first and second floor receivers in a building located closer to Loop 1604 would achieve the minimum feasible noise reduction of 5 dB(A), and two units would achieve the noise reduction design goal of at least 7 dB(A). However, the noise barriers would not be feasible according to TxDOT noise policy since neither individual barrier, nor combination of barriers, would achieve a noise reduction of at least 5 dB(A) at greater than 50 percent of first row impacted receptors. In addition, the total cost of the barriers of $289,440, or $57,888 per benefited receiver, would exceed the reasonable, cost-effectiveness criterion of $25,000 per benefitted receiver. Therefore, noise barriers at this location are not proposed for incorporation into the project.

R64 – This receiver represents an outdoor dining area at the Starbucks restaurant located at the southeast corner of the eastbound Loop 1604 frontage road and Blanco Road (**Appendix D, Figure 3, Map 8 of 11**). A continuous noise barrier approximately 314 feet long placed along the edge of the Blanco Road right-of-way from north of an access driveway to the restaurant and then turning east along the Loop 1604 right-of-way to another access driveway from the Loop 1604 frontage road was evaluated for this receiver. The results of the modelling showed that at 20 feet high, the barrier would achieve the minimum feasible noise reduction of 5 dB(A) at the receiver; however, the receiver would not achieve the noise reduction design goal of at least 7 dB(A). Therefore, a noise barrier at this location is not proposed for incorporation into the project.

R69 – This receiver represents an outdoor dining area at the Jerusalem Grill restaurant located approximately 800 feet west of Stone Oak Parkway along the westbound Loop 1604 frontage (**Appendix D, Figure 3, Map 9 of 11**). A continuous noise barrier approximately 388 feet long placed along the edge of the Loop 1604 right-of-way was evaluated for this receiver. The results of the modelling showed that at 20 feet high, the noise barrier would not achieve the minimum feasible noise reduction of 5 dB(A) at this receiver; therefore, a noise barrier at this location is not proposed for incorporation into the project.

R71 – This receiver represents an outdoor dining area at the Corner Bakery Cafe restaurant located in Stone Oak Plaza at the northeast corner of the westbound Loop 1604 frontage road and Stone Oak Parkway (**Appendix D, Figure 3, Map 9 of 11**). A noise barrier approximately 318 feet long with two breaks for existing access driveways to Stone Oak Plaza placed along the edge of the Loop 1604 right-of-way was evaluated for this receiver. The results of the modelling showed that at 20 feet high, the noise barrier would not achieve the minimum feasible noise reduction of 5 dB(A) at this receiver; therefore, a noise barrier at this location is not proposed for incorporation into the project.

R81 - R85 – These receivers represent 19 single-family residences with backyards facing Loop 1604 within the Gold Canyon subdivision located adjacent to the Loop 1604 eastbound frontage road east of Gold Canyon Road (**Appendix D, Figure 3, Map 10 of 11**). There is an existing 10 to 12-foot high barrier in this location that was constructed as a result of a separate project. The existing barrier was extended to the east by approximately 511 feet and was placed along the edge of the Loop 1604 right-of-way in an attempt to mitigate noise at 11 impacted residential receivers located at the eastern end of the subdivision. The results of the modelling showed that at 20 feet high for the existing barrier segment and extended barrier segment, 14 receivers would achieve the minimum feasible noise reduction of 5 dB(A), and three receivers would be expected to have a noise reduction

of at least 7 dB(A). However, the total cost of the barriers would be $553,320, or $39,523 per benefitted receiver. The total cost would exceed the reasonable, cost-effectiveness criterion of $25,000 per benefitted receiver; therefore, there would be no changes to the existing barrier for the neighborhood and a noise barrier extension at this location is not proposed for incorporation into the project.

Noise barriers would be acoustically feasible and reasonable for the following impacted receivers and, therefore, are proposed for incorporation into the project.

R5 – R7: These receivers represent the Marquis Bandera Apartments located east of Bandera Road, with 16 impacted first and second floor units in six buildings with patios and balconies that face Loop 1604 (**Appendix A, Figure 2, Noise Receiver and Barrier Locations, Map 3 of 46**). There are two entrances with direct access to the frontage road (one is a gated emergency access). A set of three noise barriers, ranging from 8 to 16 feet high approximately 395, 519, and 290 feet long from south to north, respectively, were evaluated at the edge of the right-of-way within the apartment property lines, with two breaks in the barrier for the two access driveways. Based on preliminary calculations, the noise barriers totaling 1,204 feet in length and varying from 8 feet high on the west end to 16 feet in height in the middle and east sections would be expected to reduce noise levels by at least 5 dB(A) for 12 receivers at a total cost of $289,872, or $24,156 per benefitted receiver. Eight receivers would be expected to have a noise reduction of at least 7 dB(A). This barrier was determined to be acoustically feasible and is summarized in **Table 3** as Barrier 1.

R47 – R49: These receivers represent the Ridgeline at Rogers Ranch Apartments located east of NW Military Highway with 15 impacted first and second floor units in five buildings with patios and balconies that face Loop 1604 (**Appendix A, Figure 2, Map 23 of 46**). In this location, a continuous noise barrier could be constructed at the edge of the Loop 1604 right-of-way from east of the Ridgeline at Rogers Ranch access driveway from the frontage road located in the center of the complex to the end of the existing apartment fence at the east end of the property. A barrier would not be needed west of the access driveway since there are no receivers with outdoor activity areas adjacent to the roadway in this area. Based on preliminary calculations, a noise barrier totaling 623 feet in length and 14 feet in height would be expected to reduce noise levels by at least 5 dB(A) for 10 receivers at a total cost of $156,996, or $15,700 per benefitted receiver. Four receivers would be expected to have a noise reduction of at least 7 dB(A). This barrier was determined to be acoustically feasible and is summarized in **Table 3** as Barrier 2.

R98 – R100: These receivers represent the Emerald Village Apartments located east of Redland Road with 11 impacted first, second, and third floor units in three buildings with patios and balconies that face Loop 1604 (**Appendix A, Figure 2, Map 37 of 46**). There are two entrances to the apartment complex with direct access to the Loop 1604 frontage road. Two noise barriers located at the edge of the right-of-way, approximately 94 and 440 feet long located west of the west access driveway and between the access driveways along the frontage road, respectively, were evaluated. A noise barrier up to 20 feet in height was also evaluated at the east side of the property; however, the barrier was not effective because of sloping terrain in this part of the property. Based on preliminary calculations, noise barriers totaling 534 feet in length and 16 feet in height would be expected to reduce noise levels by at least 5 dB(A) for eight receivers at a total cost of $153,792, or $19,224 per benefitted receiver. One receiver would be expected to have a noise reduction of at least 7 dB(A). This barrier was determined to be acoustically feasible and is summarized in **Table 3** as Barrier 3.

R108 – R110: These receivers represent the Judson Pointe Apartments located west of Judson Road with 28 impacted first and second floor units in three buildings with patios and balconies that face Loop 1604 (**Appendix A, Figure 2, Map 41 of 46**). In this location, a continuous noise barrier could be constructed at the edge of the Loop 1604 right-of-way from west of the Judson Pointe access

driveway along the frontage road to the apartment west property line. Based on preliminary calculations, a noise barrier totaling 892 feet in length and 18 feet high would be expected to reduce noise levels by at least 5 dB(A) for 15 receivers at a total cost of $289,008, or $19,267 per benefitted receiver. Twelve receivers would be expected to have a noise reduction of at least 7 dB(A). This barrier was determined to be acoustically feasible and is summarized in **Table 3** as Barrier 4.

R112 – R113: These receivers represent 11 single-family residences in the Vista subdivision located adjacent to the Loop 1604 eastbound frontage road west of Mountain Vista Drive. The residences are located on Maple Vista and Royal Vista Drive and have backyards facing Loop 1604 (**Appendix A, Figure 2, Map 43 of 46**). A continuous noise barrier was placed at the edge of the Loop 1604 right-of-way adjacent to the residential area since there is no direct access to the residences from the frontage road. Based on preliminary calculations, a noise barrier totaling 772 feet in length and 8 feet high would be expected to reduce noise levels by at least 5 dB(A) for six receivers at a total cost of $111,168, or $18,528 per benefitted receiver. One receiver would be expected to have a noise reduction of at least 7 dB(A). This barrier was determined to be acoustically feasible and is summarized in **Table 3** as Barrier 5.

Table 3: Noise Barrier Proposal

Barrier	Representative Receivers	Total No. Benefited	Length (feet)	Height (feet)	Total Cost	$/Benefited Receiver
1	R5-R7	12	1,204	8-16	$289,872	$24,156
2	R47-R49	10	623	14	$156,996	$15,700
3	R98-R100	8	534	16	$153,792	$19,224
4	R108-R110	15	892	18	$289,008	$19,267
5	R112-R113	6	772	8	$111,168	$18,528

To avoid noise impacts that may result from future development of properties adjacent to the proposed project build alternative, local officials responsible for land use control programs must ensure, to the maximum extent possible, that no new activities are planned or constructed along or within the predicted (2045) noise impact contours identified in **Table 4**.

Table 4: Predicted Noise Impact Contours

Roadway Segment	71 dB(A) Impact Contour 1 Description	66 dB(A) Impact Contour 2 Description
Loop 1604 East of Kyle Seale Parkway	45 feet from ROW	220 feet from ROW
Loop 1604 East of NW Military Highway	115 feet from ROW	310 feet from ROW
Loop 1604 West of Judson Road	90 feet from ROW	270 feet from ROW
Loop 1604 East of Nacogdoches Road	Within ROW	170 feet from ROW
I-10 North between Loop 1604 and La Cantera Parkway	90 feet from ROW	250 feet from ROW
I-10 South between Loop 1604 and UTSA Boulevard	90 feet from ROW	260 feet from ROW

Notes: (1) NAC Category E
(2) NAC Category B and Category C

During the construction phase of this project, temporary increases in noise may result from construction activities. Noise associated with the construction of the project is difficult to predict. Heavy machinery, the major source of noise in construction, is constantly moving in unpredictable patterns. However, construction normally occurs during daylight hours when occasional loud noises are tolerable. None of the receivers are expected to be exposed to construction noise for a long duration; therefore, any extended disruption of normal activities is not expected. Provisions would be included in the construction plans and specifications that require the contractor to make every reasonable effort to minimize construction noise through abatement measures such as work-hour controls and proper maintenance of muffler systems.

A copy of this traffic noise analysis will be available to local officials to ensure, to the maximum extent possible, future developments are planned, designed and programmed in a manner that would avoid traffic noise impacts. On the date of National Environmental Policy Act (NEPA) approval (Date of Public Knowledge), FHWA and TxDOT are no longer responsible for providing noise abatement for new development adjacent to the project.

APPENDIX A

Figures

Figure 1: Project Area Map

Figure 2: Noise Receiver Locations

Document Path: P:_TRANS\TxDOT\60591514 - LP1604 Sch Env\900-CAD_GIS\920_GIS\Exhibits\Environmental\Project_Location_Map.mxd

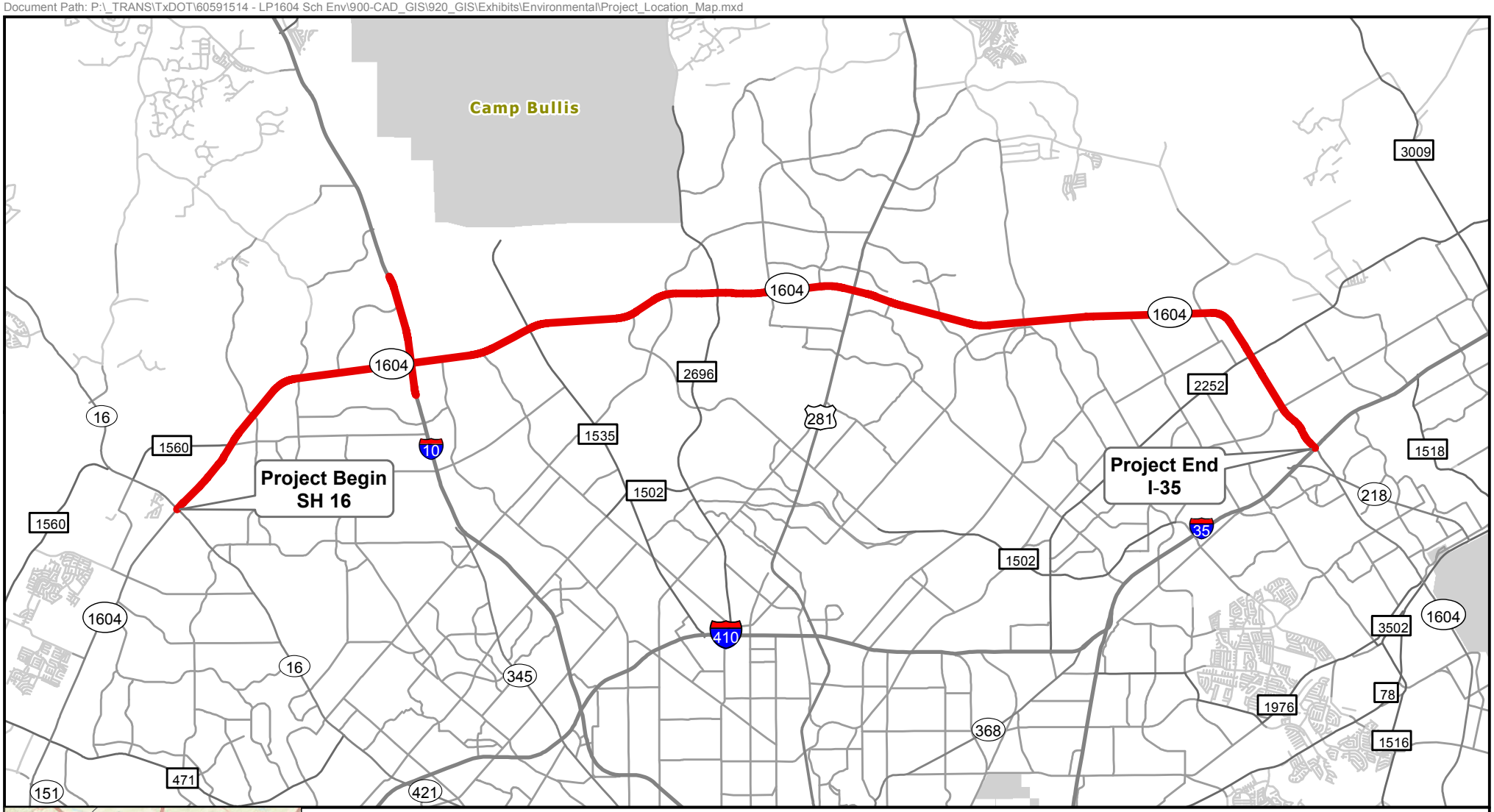

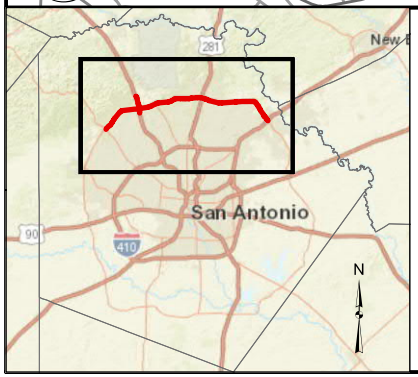

Legend

Project Location

Project Location Map
Loop 1604
from SH 16 to I-35

N

0 1.25 2.5 Miles

Texas Department of Transportation

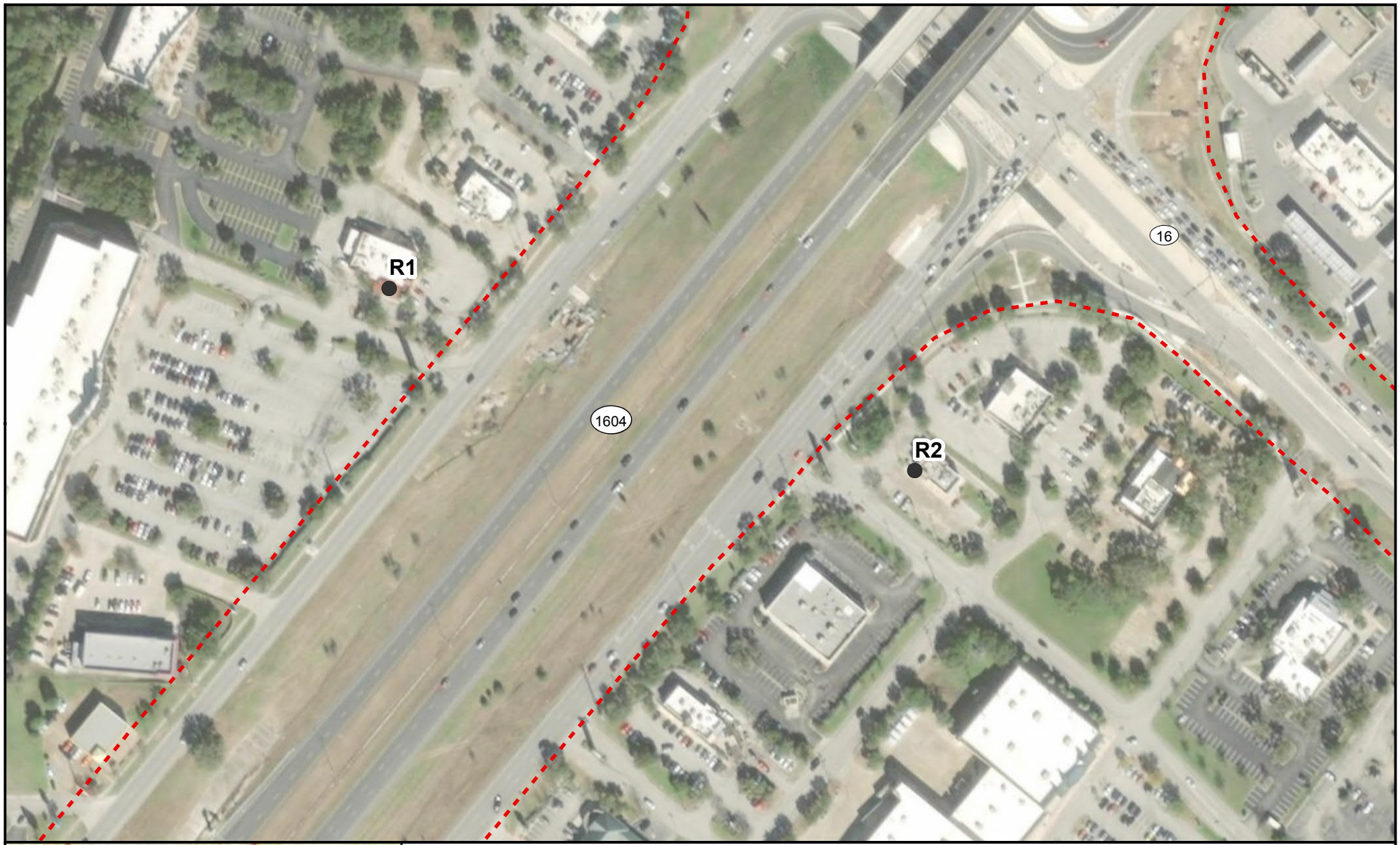

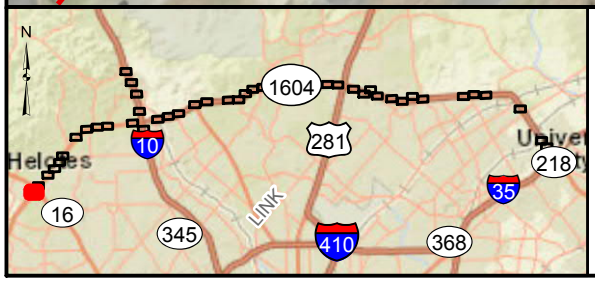

Figure 2

Noise Receiver and Proposed Barrier Locations

Loop 1604 from SH 16 to I-35

Map 1 of 46

Legend

- Benefited Receiver
- Impacted Receiver
- No Impact Receiver
- Proposed Noise Barrier
- Existing Right-of-Way

N

0 100 200

Feet

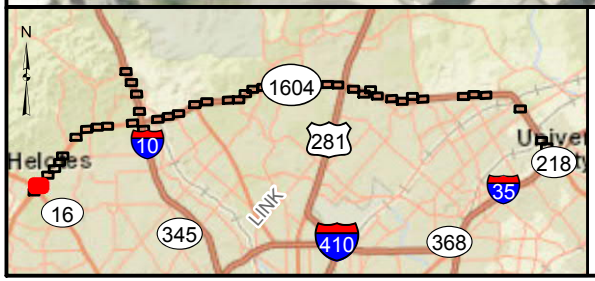

Figure 2

Noise Receiver and Proposed Barrier Locations

Loop 1604 from SH 16 to I-35

Map 2 of 46

Legend

- Benefited Receiver
- Impacted Receiver
- No Impact Receiver
- Proposed Noise Barrier
- Existing Right-of-Way
- Drainage Easement

N

0 100 200

Feet

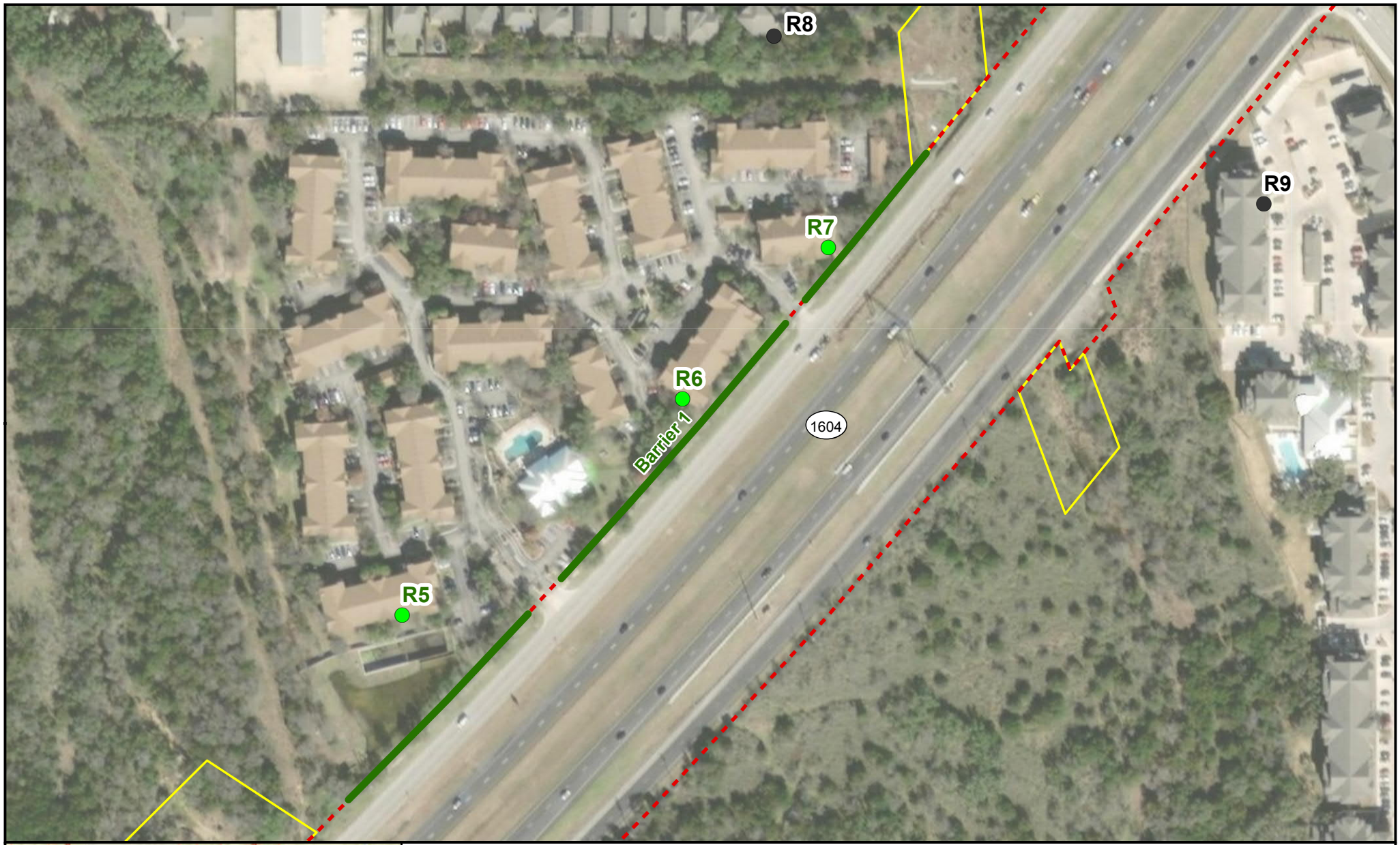

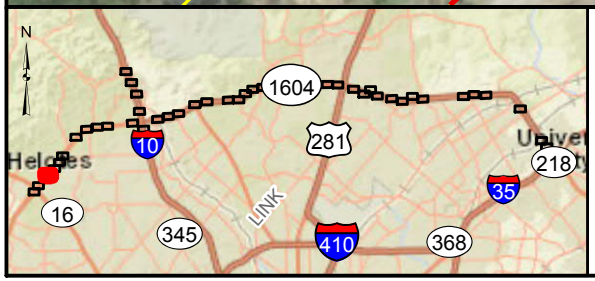

Figure 2

Noise Receiver and Proposed Barrier Locations

Loop 1604 from SH 16 to I-35

Map 3 of 46

Legend

- Benefited Receiver
- Impacted Receiver
- No Impact Receiver
- Proposed Noise Barrier
- Existing Right-of-Way
- Drainage Easement

N

0 100 200

Feet

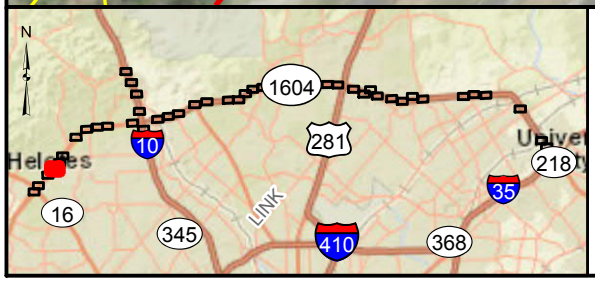

Figure 2

Noise Receiver and Proposed Barrier Locations

Loop 1604 from SH 16 to I-35

Map 4 of 46

Legend

- Benefited Receiver
- Impacted Receiver
- No Impact Receiver
- Proposed Noise Barrier
- Existing Right-of-Way
- Drainage Easement

N

0 100 200

Feet

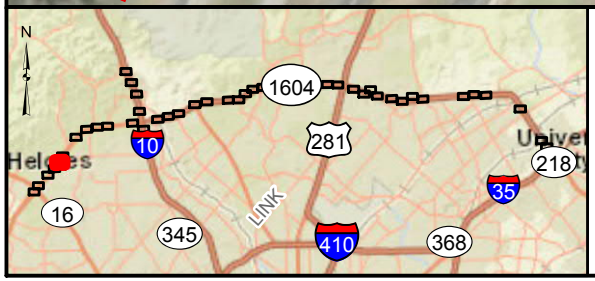

Figure 2

Noise Receiver and Proposed Barrier Locations

Loop 1604 from SH 16 to I-35

Map 5 of 46

Legend

- Benefited Receiver
- Impacted Receiver
- No Impact Receiver
- Proposed Noise Barrier
- Existing Right-of-Way
- Drainage Easement

N

0 100 200

Feet

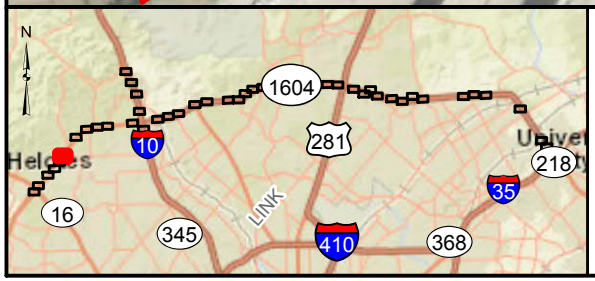

Figure 2

Noise Receiver and Proposed Barrier Locations

Loop 1604 from SH 16 to I-35

Map 6 of 46

Legend

- Benefited Receiver
- Impacted Receiver
- No Impact Receiver
- Proposed Noise Barrier
- Existing Right-of-Way

N

0 100 200

Feet

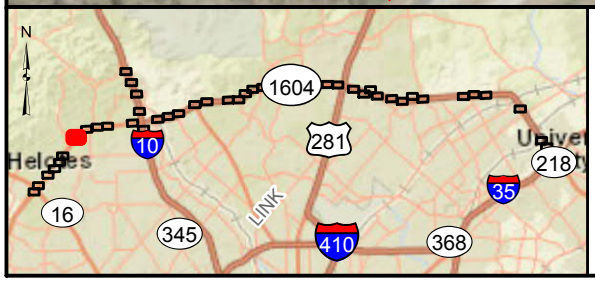

Figure 2

Noise Receiver and Proposed Barrier Locations

Loop 1604 from SH 16 to I-35

Map 7 of 46

Legend

- Benefited Receiver
- Impacted Receiver
- No Impact Receiver
- Proposed Noise Barrier
- Existing Right-of-Way
- Drainage Easement

N

0 100 200

Feet

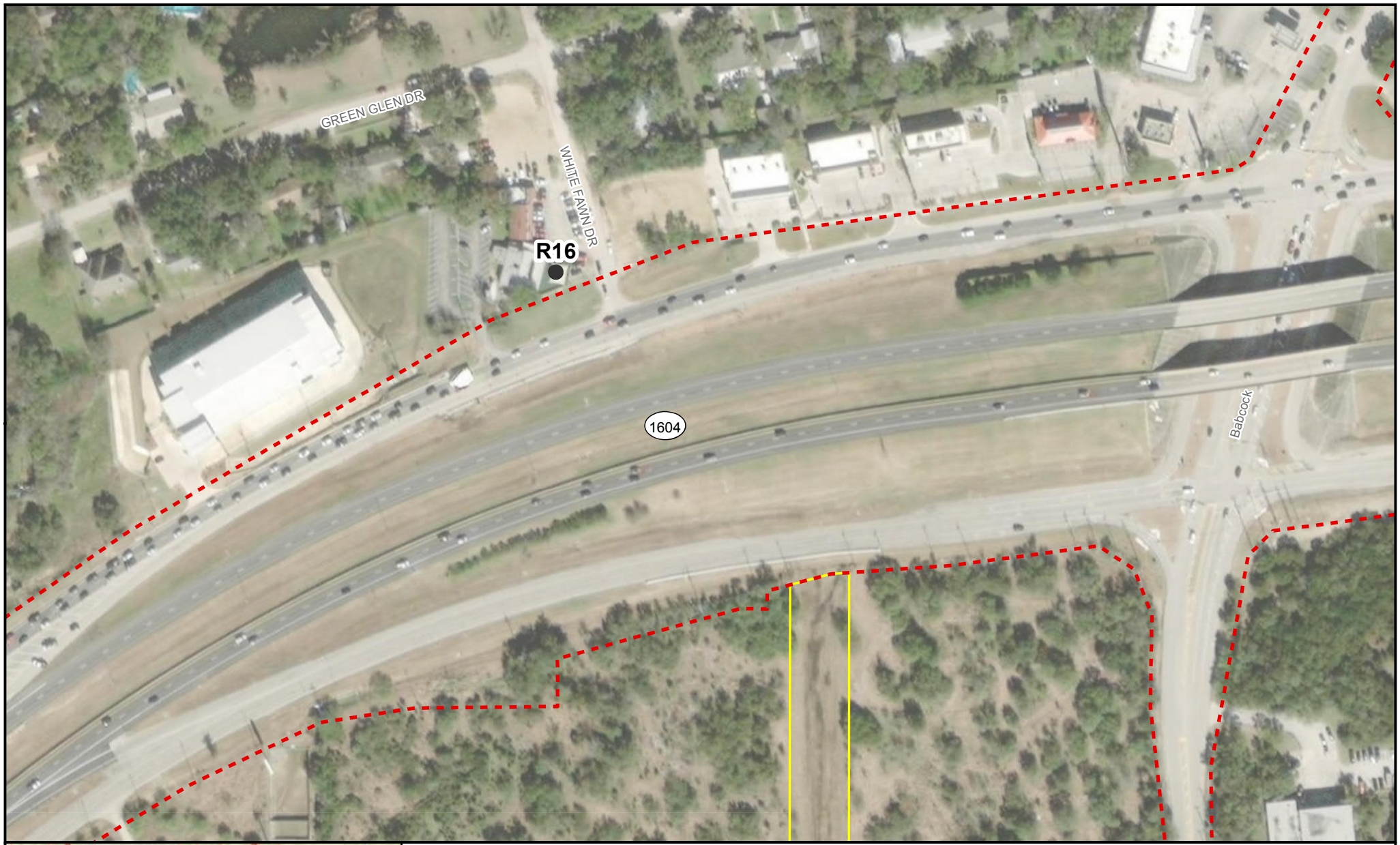

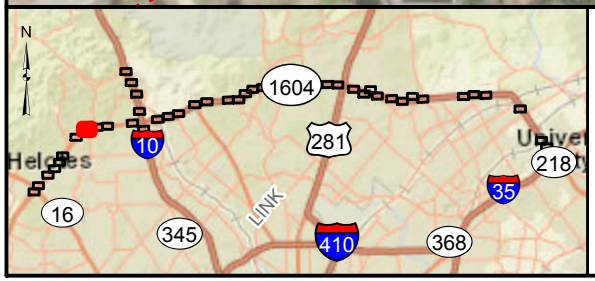

Figure 2

Noise Receiver and Proposed Barrier Locations

Loop 1604 from SH 16 to I-35

Map 8 of 46

Legend

- Benefited Receiver
- Impacted Receiver
- No Impact Receiver
- Proposed Noise Barrier
- Existing Right-of-Way
- Drainage Easement

N

0 100 200

Feet

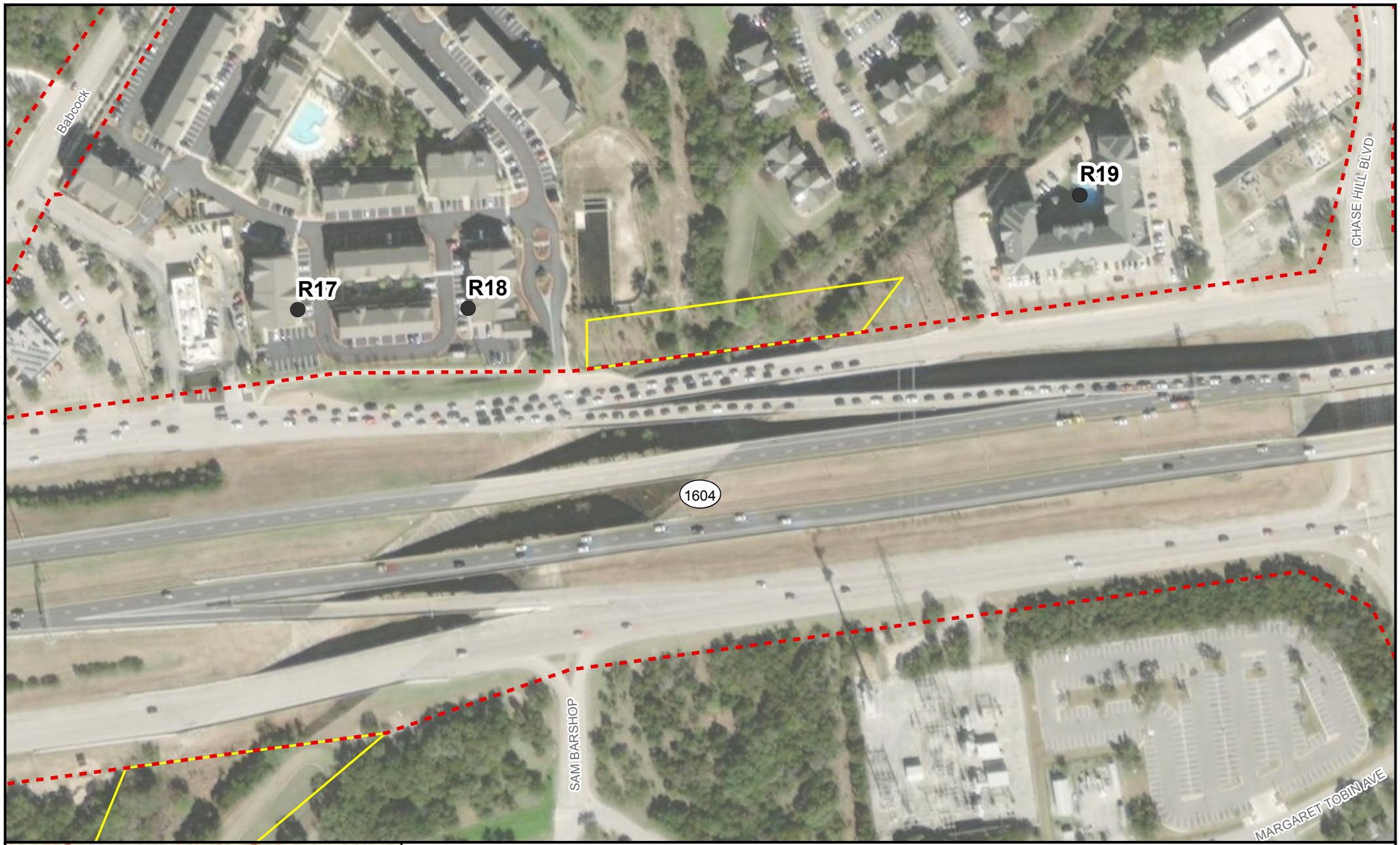

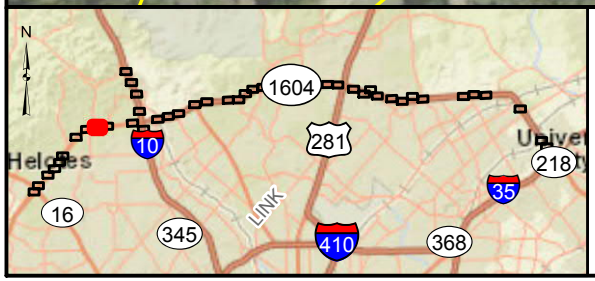

Figure 2

Noise Receiver and Proposed Barrier Locations

Loop 1604 from SH 16 to I-35

Map 9 of 46

Legend

- Benefited Receiver
- Impacted Receiver
- No Impact Receiver
- Proposed Noise Barrier
- Existing Right-of-Way
- Drainage Easement

N

0 100 200

Feet

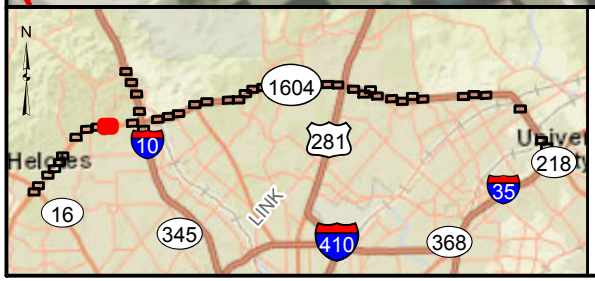

Figure 2

Noise Receiver and Proposed Barrier Locations

Loop 1604 from SH 16 to I-35

Map 10 of 46

Legend

- Benefited Receiver
- Impacted Receiver
- No Impact Receiver
- Proposed Noise Barrier
- Existing Right-of-Way
- Drainage Easement

N

0 100 200

Feet

Figure 2

Noise Receiver and Proposed Barrier Locations

Loop 1604 from SH 16 to I-35

Map 11 of 46

Legend

- Benefited Receiver
- Impacted Receiver
- No Impact Receiver
- Proposed Noise Barrier
- Existing Right-of-Way
- Drainage Easement

N

0 100 200

Feet

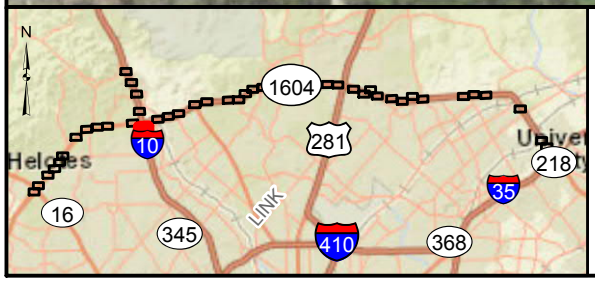

Figure 2

Noise Receiver and Proposed Barrier Locations

Loop 1604 from SH 16 to I-35

Map 12 of 46

Legend

- Benefited Receiver
- Impacted Receiver
- No Impact Receiver
- Proposed Noise Barrier
- Existing Right-of-Way
- Drainage Easement

N

0 100 200

Feet

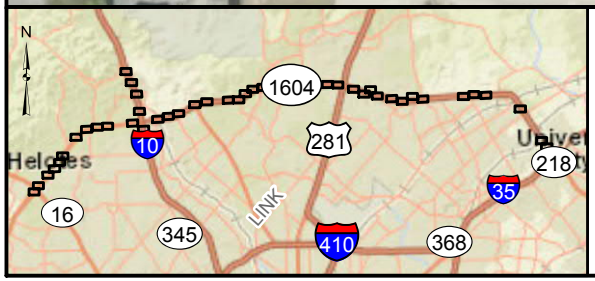

Figure 2

Noise Receiver and Proposed Barrier Locations

Loop 1604 from SH 16 to I-35

Map 13 of 46

Legend

- Benefited Receiver
- Impacted Receiver
- No Impact Receiver
- Proposed Noise Barrier
- Existing Right-of-Way
- Drainage Easement

N

0 100 200

Feet

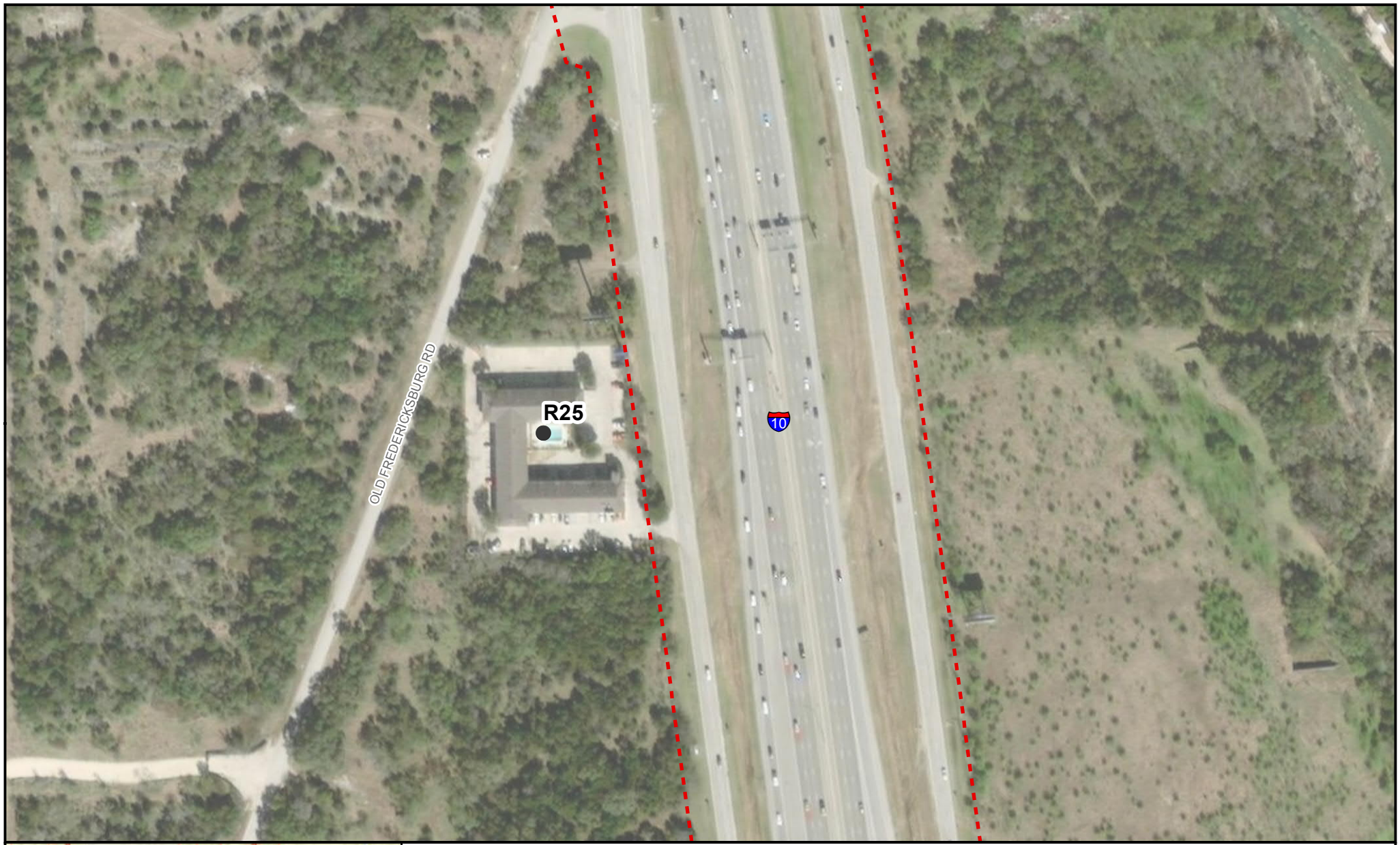

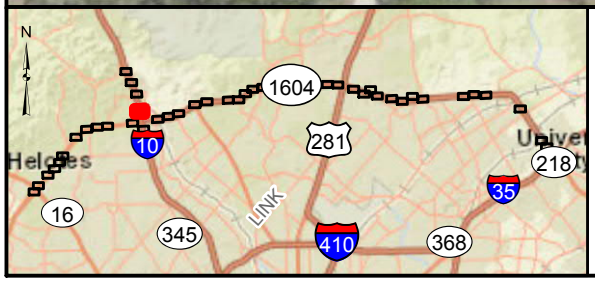

Figure 2

Noise Receiver and Proposed Barrier Locations

Loop 1604 from SH 16 to I-35

Map 14 of 46

Legend

- Benefited Receiver
- Impacted Receiver
- No Impact Receiver
- Proposed Noise Barrier
- Existing Right-of-Way

N

0 100 200

Feet

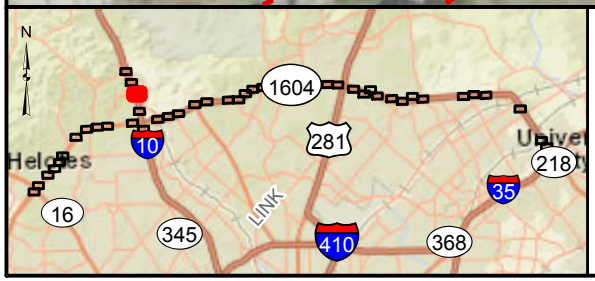

Figure 2

Noise Receiver and Proposed Barrier Locations

Loop 1604 from SH 16 to I-35

Map 15 of 46

Legend

- Benefited Receiver
- Impacted Receiver
- No Impact Receiver
- Proposed Noise Barrier
- Existing Right-of-Way

N

0 100 200

Feet

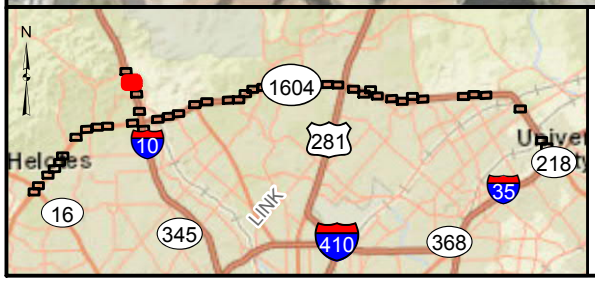

Figure 2

Noise Receiver and Proposed Barrier Locations

Loop 1604 from SH 16 to I-35

Map 16 of 46

Legend

- Benefited Receiver
- Impacted Receiver
- No Impact Receiver
- Proposed Noise Barrier
- Existing Right-of-Way

N

0 100 200

Feet

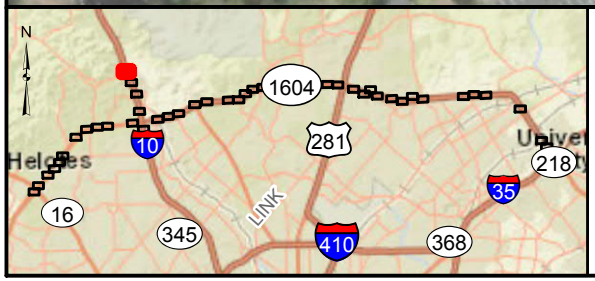

Figure 2

Noise Receiver and Proposed Barrier Locations

Loop 1604 from SH 16 to I-35

Map 17 of 46

Legend

- Benefited Receiver
- Impacted Receiver
- No Impact Receiver
- Proposed Noise Barrier
- Existing Right-of-Way
- Drainage Easement

N

0 100 200

Feet

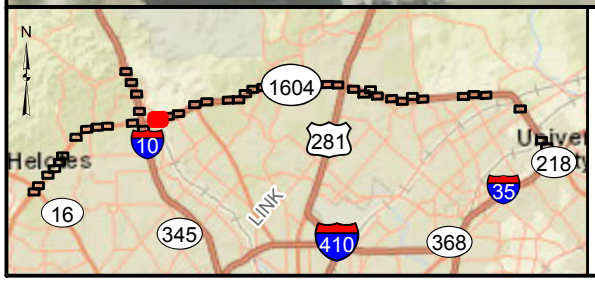

Figure 2

Noise Receiver and Proposed Barrier Locations

Loop 1604 from SH 16 to I-35

Map 18 of 46

Legend

- Benefited Receiver
- Impacted Receiver
- No Impact Receiver
- Proposed Noise Barrier
- Existing Right-of-Way

N

0 100 200

Feet

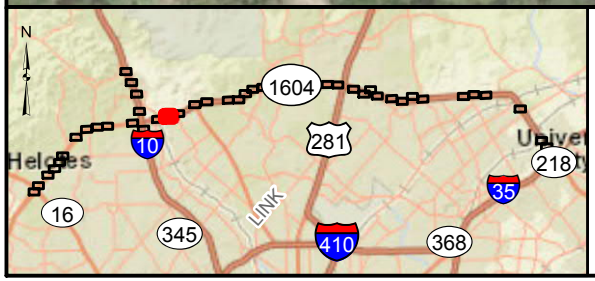

Figure 2

Noise Receiver and Proposed Barrier Locations

Loop 1604 from SH 16 to I-35

Map 19 of 46

Legend

- Benefited Receiver
- Impacted Receiver
- No Impact Receiver
- Proposed Noise Barrier
- Existing Right-of-Way

N

0 100 200

Feet

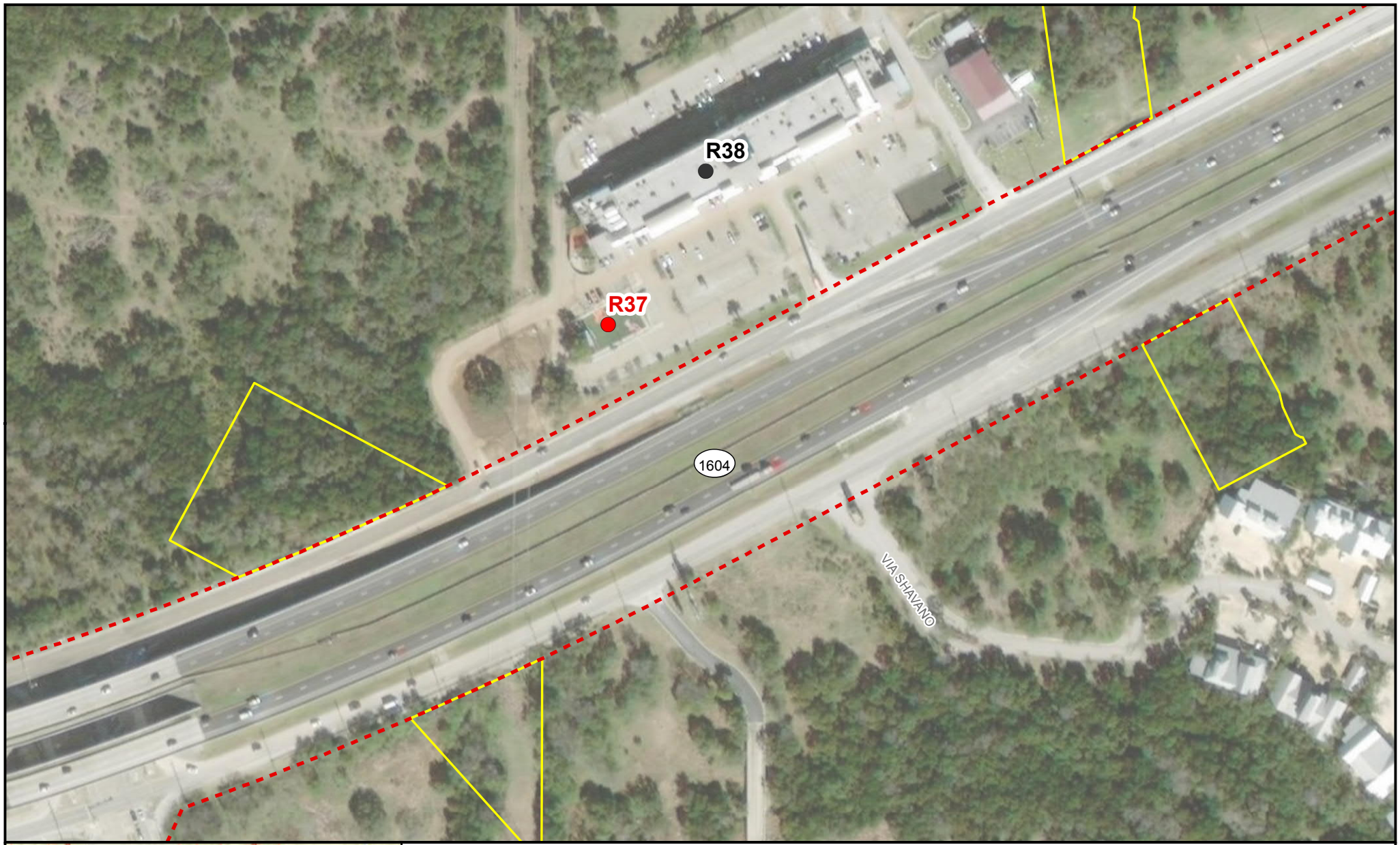

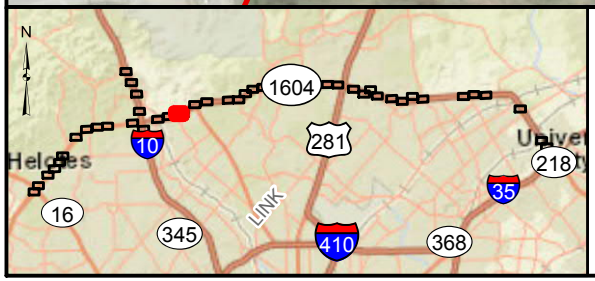

Figure 2

Noise Receiver and Proposed Barrier Locations

Loop 1604 from SH 16 to I-35

Map 20 of 46

Legend

- Benefited Receiver
- Impacted Receiver
- No Impact Receiver
- Proposed Noise Barrier
- Existing Right-of-Way
- Drainage Easement

N

0 100 200

Feet

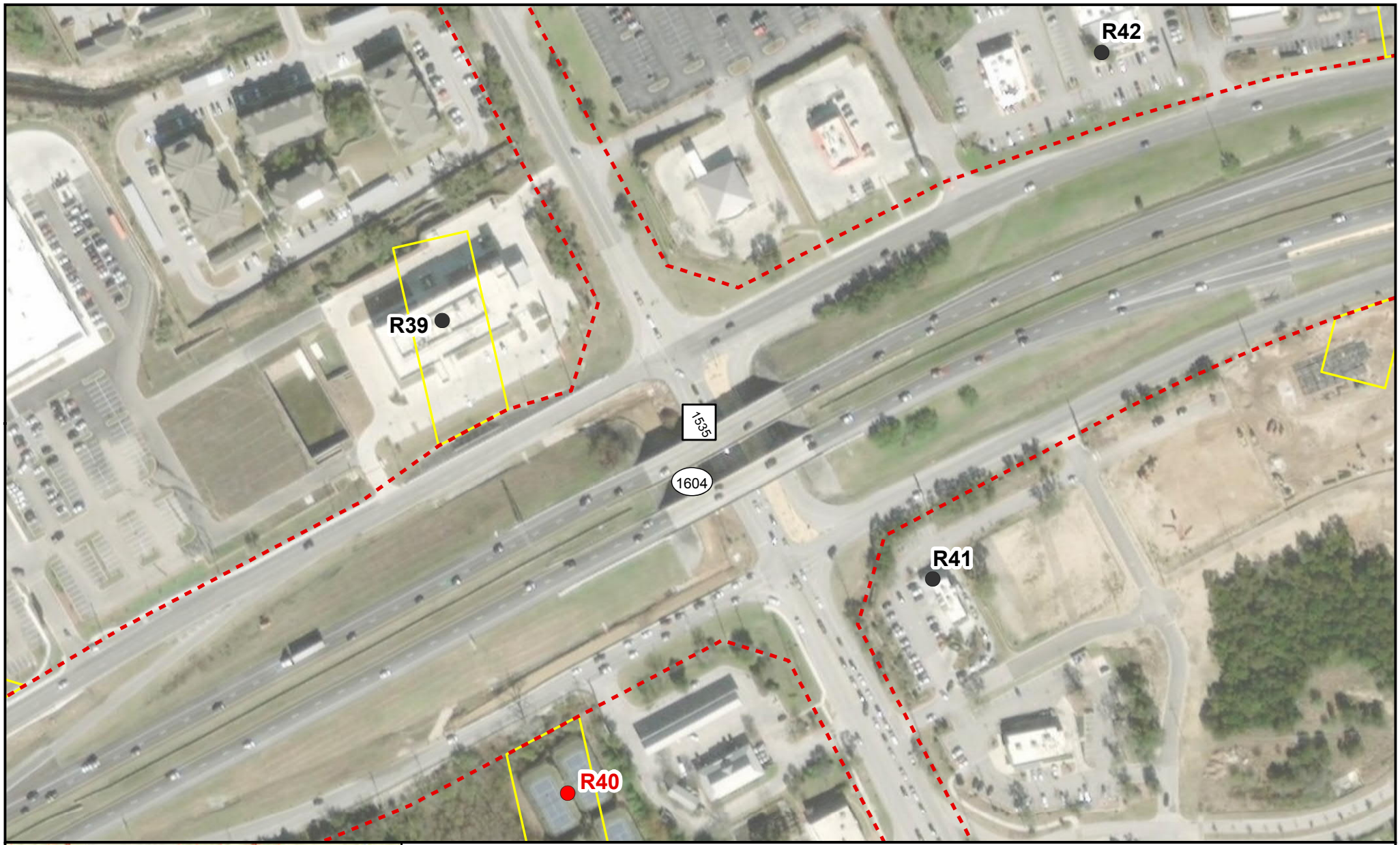

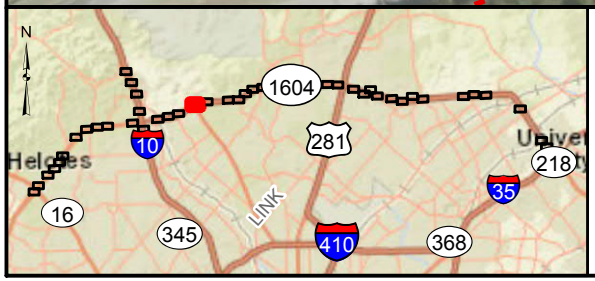

Figure 2

Noise Receiver and Proposed Barrier Locations

Loop 1604 from SH 16 to I-35

Map 21 of 46

Legend

- Benefited Receiver
- Impacted Receiver
- No Impact Receiver
- Proposed Noise Barrier
- Existing Right-of-Way
- Drainage Easement

N

0 100 200

Feet

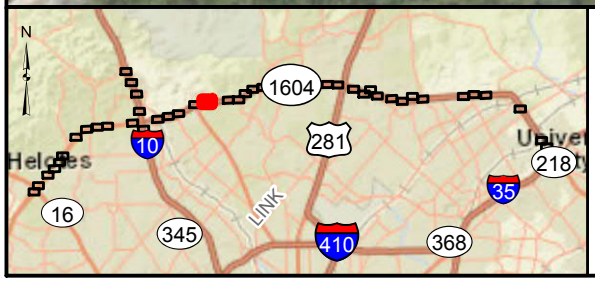

Figure 2

Noise Receiver and Proposed Barrier Locations

Loop 1604 from SH 16 to I-35

Map 22 of 46

Legend

- Benefited Receiver
- Impacted Receiver
- No Impact Receiver
- Proposed Noise Barrier
- Existing Right-of-Way
- Drainage Easement

N

0 100 200

Feet

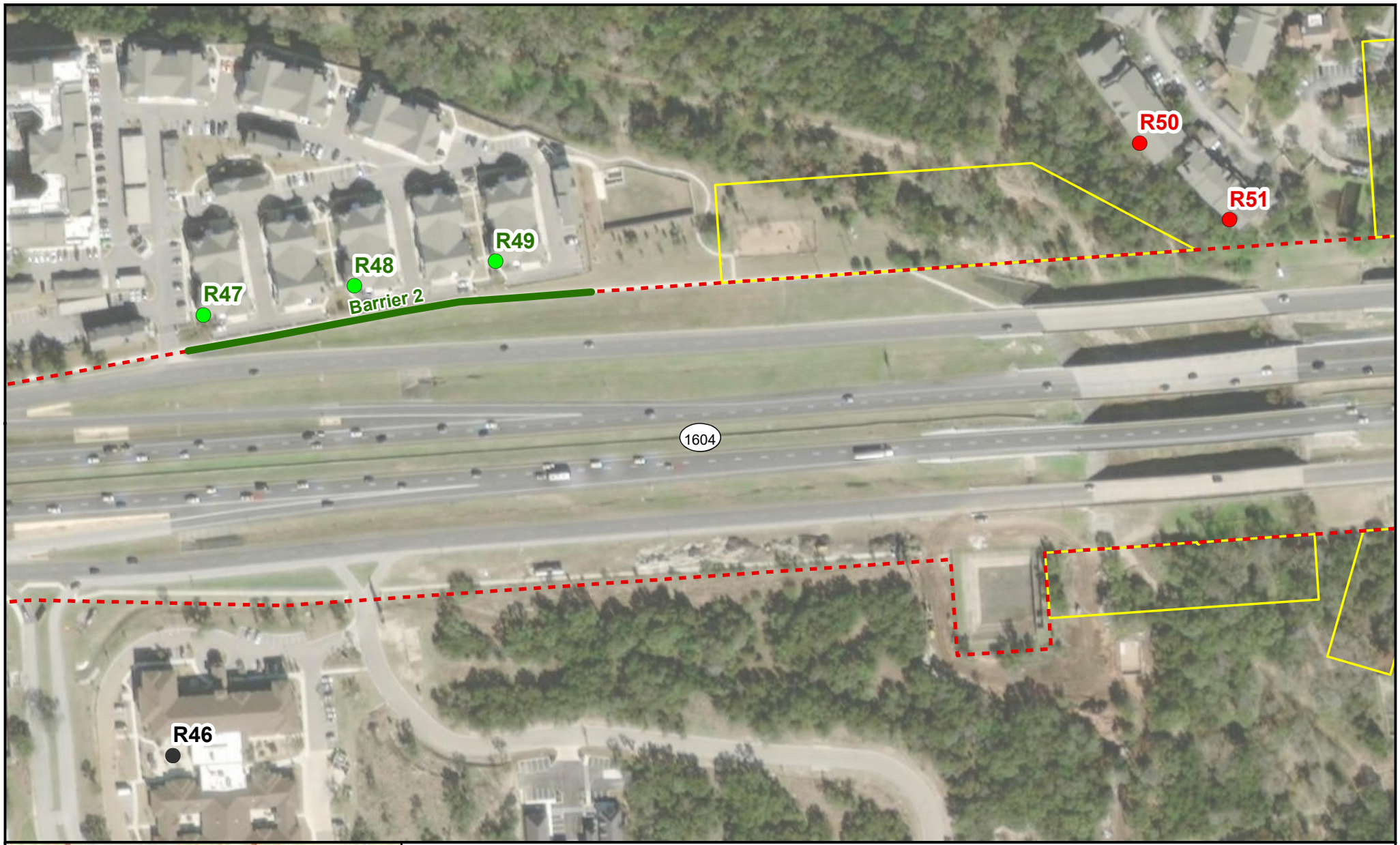

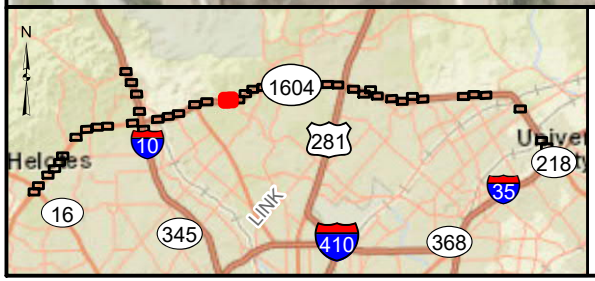

Figure 2

Noise Receiver and Proposed Barrier Locations

Loop 1604 from SH 16 to I-35

Map 23 of 46

Legend

- Benefited Receiver
- Impacted Receiver
- No Impact Receiver
- Proposed Noise Barrier
- Existing Right-of-Way
- Drainage Easement

N

0 100 200

Feet

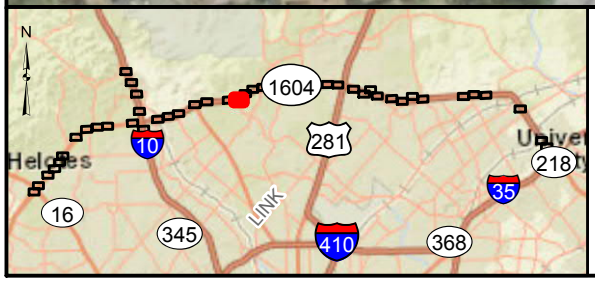

Figure 2

Noise Receiver and Proposed Barrier Locations

Loop 1604 from SH 16 to I-35

Map 24 of 46

Legend

- Benefited Receiver
- Impacted Receiver
- No Impact Receiver
- Proposed Noise Barrier
- Existing Right-of-Way
- Drainage Easement

N

0 100 200

Feet

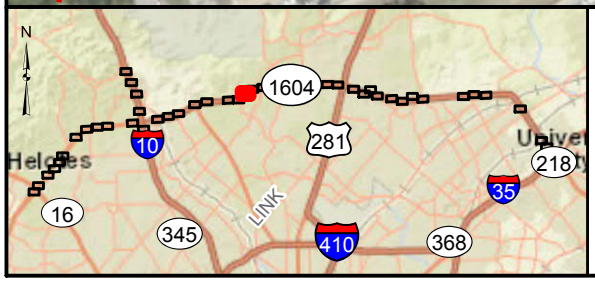

Figure 2

Noise Receiver and Proposed Barrier Locations

Loop 1604 from SH 16 to I-35

Map 25 of 46

Legend

- Benefited Receiver
- Impacted Receiver
- No Impact Receiver
- Proposed Noise Barrier
- Existing Right-of-Way
- Drainage Easement

N

0 100 200

Feet

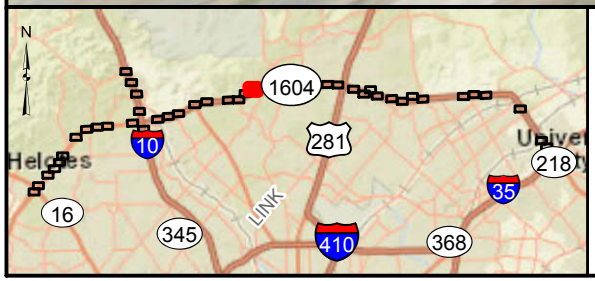

Figure 2

Noise Receiver and Proposed Barrier Locations

Loop 1604 from SH 16 to I-35

Map 26 of 46

Legend

- Benefited Receiver
- Impacted Receiver
- No Impact Receiver
- Proposed Noise Barrier
- Existing Right-of-Way
- Drainage Easement

N

0 100 200

Feet

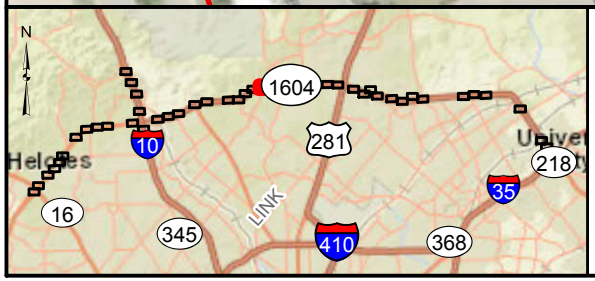

Figure 2

Noise Receiver and Proposed Barrier Locations

Loop 1604 from SH 16 to I-35

Map 27 of 46

Legend

- Benefited Receiver
- Impacted Receiver
- No Impact Receiver
- Proposed Noise Barrier
- Existing Right-of-Way
- Drainage Easement

N

0 100 200

Feet

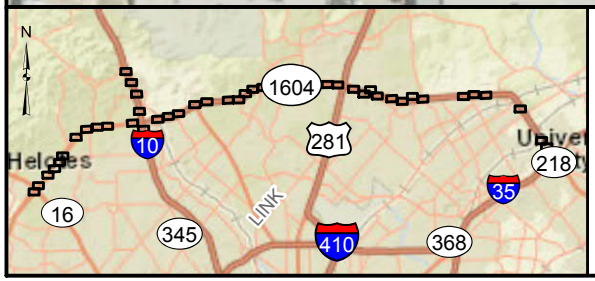

Figure 2

Noise Receiver and Proposed Barrier Locations

Loop 1604 from SH 16 to I-35

Map 28 of 46

Legend

- Benefited Receiver
- Impacted Receiver
- No Impact Receiver
- Proposed Noise Barrier
- Existing Right-of-Way

N

0 100 200

Feet

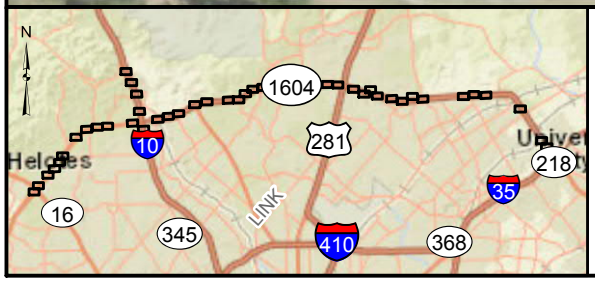

Figure 2

Noise Receiver and Proposed Barrier Locations

Loop 1604 from SH 16 to I-35

Map 29 of 46

Legend

- Benefited Receiver
- Impacted Receiver
- No Impact Receiver
- Proposed Noise Barrier
- Existing Right-of-Way
- Drainage Easement

N

0 100 200

Feet

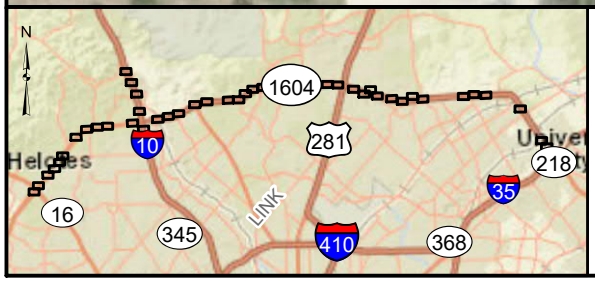

Figure 2

Noise Receiver and Proposed Barrier Locations

Loop 1604 from SH 16 to I-35

Map 30 of 46

Legend

- Benefited Receiver
- Impacted Receiver
- No Impact Receiver
- Proposed Noise Barrier
- Existing Right-of-Way
- Drainage Easement

N

0 100 200

Feet

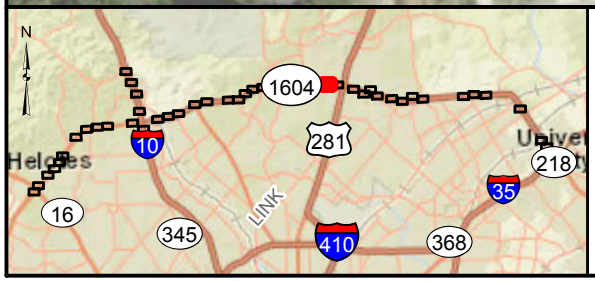

Figure 2

Noise Receiver and Proposed Barrier Locations

Loop 1604 from SH 16 to I-35

Map 31 of 46

Legend

- Benefited Receiver
- Impacted Receiver
- No Impact Receiver
- Proposed Noise Barrier
- Existing Right-of-Way
- Drainage Easement

N

0 100 200

Feet

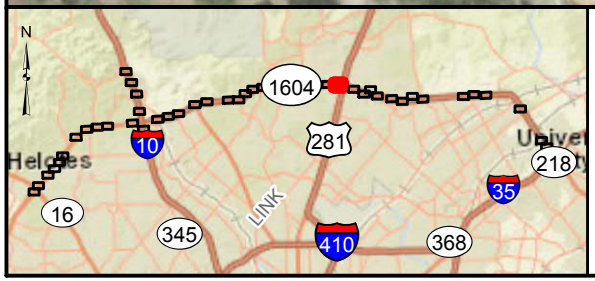

Figure 2

Noise Receiver and Proposed Barrier Locations

Loop 1604 from SH 16 to I-35

Map 32 of 46

Legend

- Benefited Receiver
- Impacted Receiver
- No Impact Receiver
- Proposed Noise Barrier
- Existing Right-of-Way
- Drainage Easement

N

0 100 200

Feet

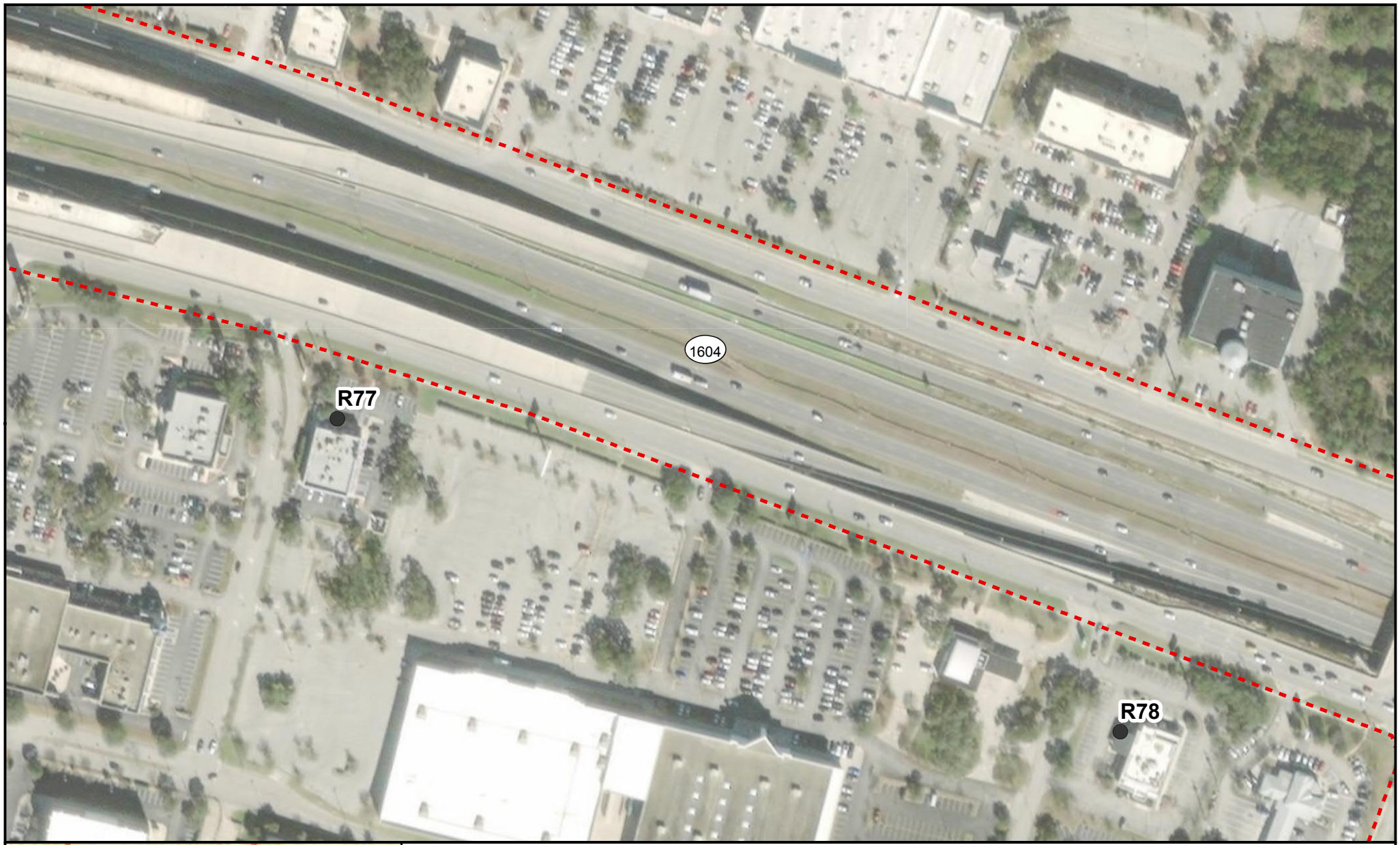

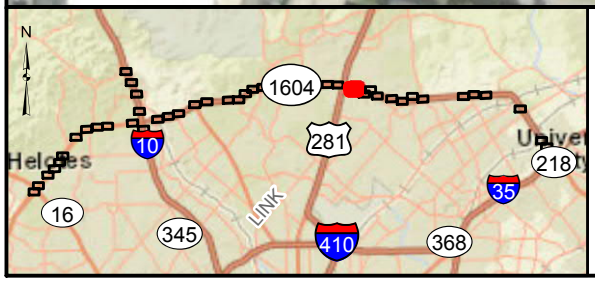

Figure 2

Noise Receiver and Proposed Barrier Locations

Loop 1604 from SH 16 to I-35

Map 33 of 46

Legend

- Benefited Receiver
- Impacted Receiver
- No Impact Receiver
- Proposed Noise Barrier
- Existing Right-of-Way

N

0 100 200

Feet

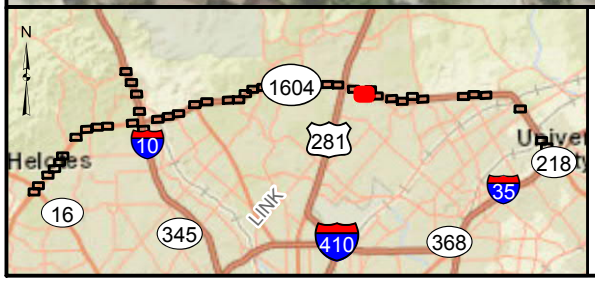

Figure 2

Noise Receiver and Proposed Barrier Locations

Loop 1604 from SH 16 to I-35

Map 34 of 46

Legend

- Benefited Receiver
- Impacted Receiver
- No Impact Receiver
- Proposed Noise Barrier
- Existing Right-of-Way

N

0 100 200

Feet

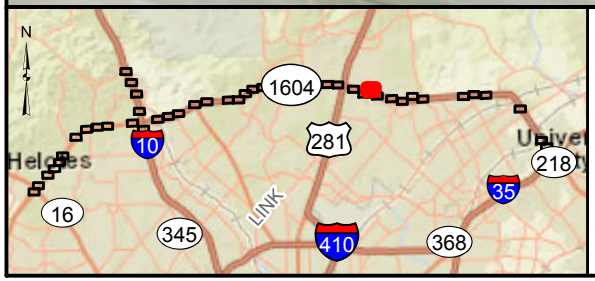

Figure 2

Noise Receiver and Proposed Barrier Locations

Loop 1604 from SH 16 to I-35

Map 35 of 46

Legend

- Benefited Receiver
- Impacted Receiver
- No Impact Receiver
- Proposed Noise Barrier
- Existing Right-of-Way

N

0 100 200

Feet

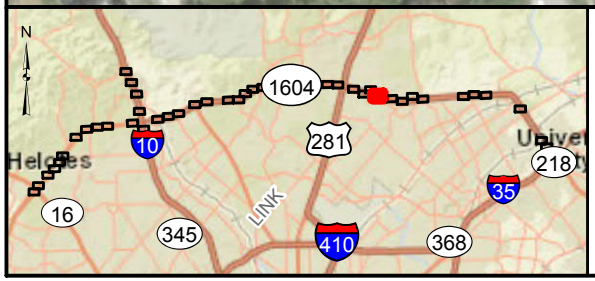

Figure 2

Noise Receiver and Proposed Barrier Locations

Loop 1604 from SH 16 to I-35

Map 36 of 46

Legend

- Benefited Receiver
- Impacted Receiver
- No Impact Receiver
- Proposed Noise Barrier
- Existing Right-of-Way

N

0 100 200

Feet

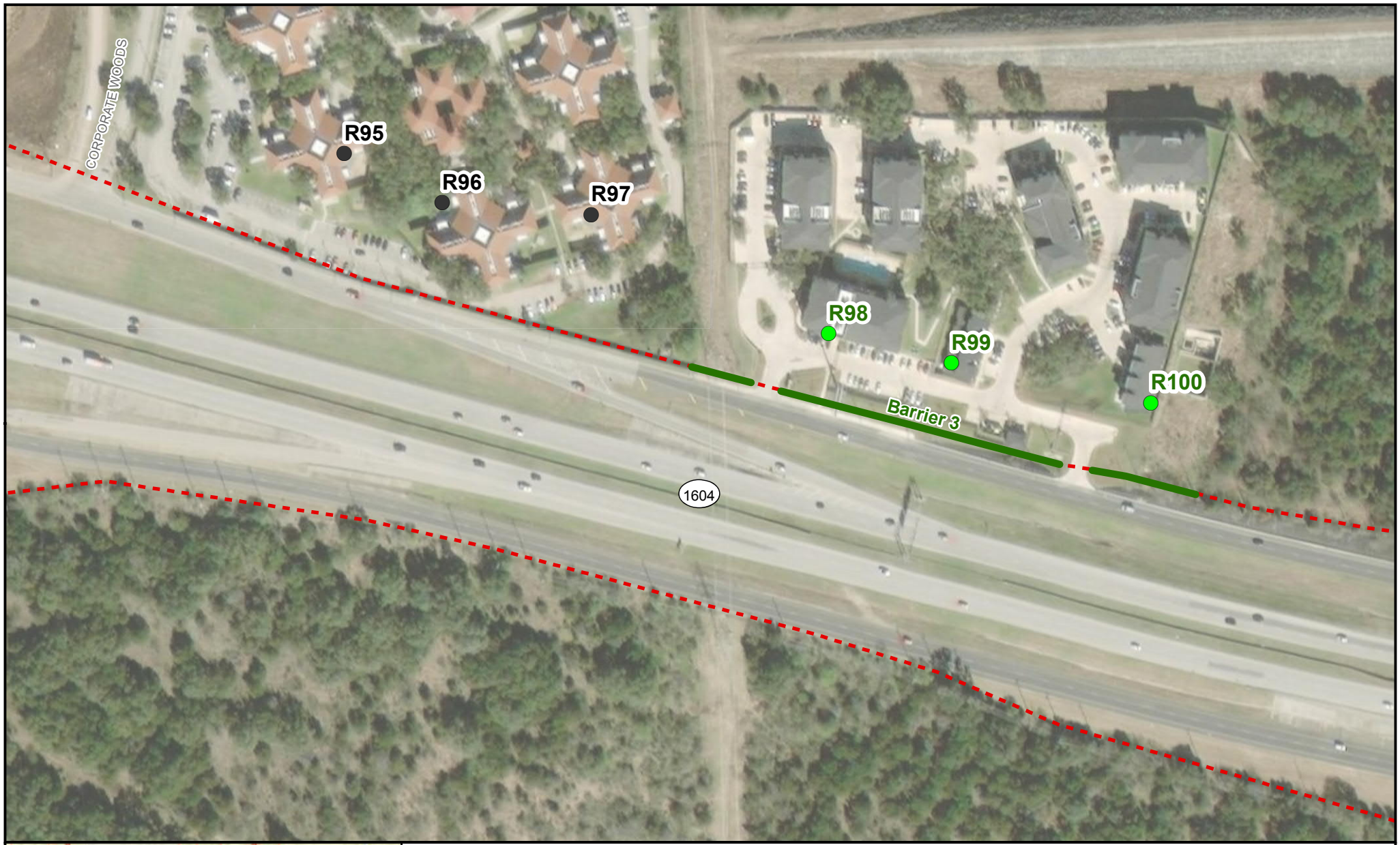

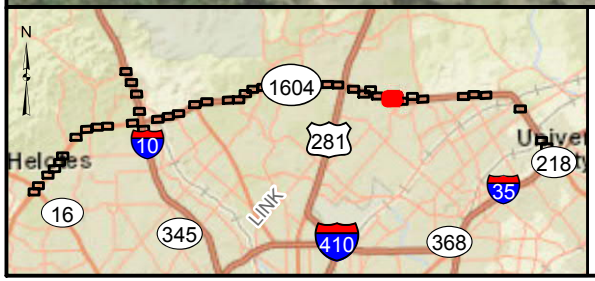

Figure 2

Noise Receiver and Proposed Barrier Locations

Loop 1604 from SH 16 to I-35

Map 37 of 46

Legend

- Benefited Receiver
- Impacted Receiver
- No Impact Receiver
- Proposed Noise Barrier
- Existing Right-of-Way

N

0 100 200

Feet

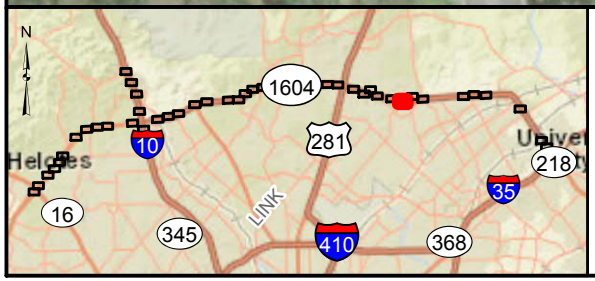

Figure 2

Noise Receiver and Proposed Barrier Locations

Loop 1604 from SH 16 to I-35

Map 38 of 46

Legend

- Benefited Receiver
- Impacted Receiver
- No Impact Receiver
- Proposed Noise Barrier
- Existing Right-of-Way
- Drainage Easement

N

0 100 200

Feet

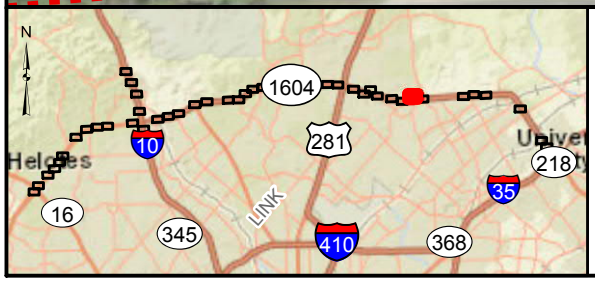

Figure 2

Noise Receiver and Proposed Barrier Locations

Loop 1604 from SH 16 to I-35

Map 39 of 46

Legend

- Benefited Receiver
- Impacted Receiver
- No Impact Receiver
- Proposed Noise Barrier
- Existing Right-of-Way
- Drainage Easement

N

0 100 200

Feet

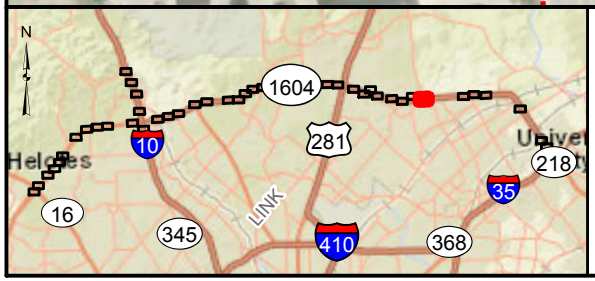

Figure 2

Noise Receiver and Proposed Barrier Locations

Loop 1604 from SH 16 to I-35

Map 40 of 46

Legend

- Benefited Receiver
- Impacted Receiver
- No Impact Receiver
- Proposed Noise Barrier
- Existing Right-of-Way
- Drainage Easement

N

0 100 200

Feet

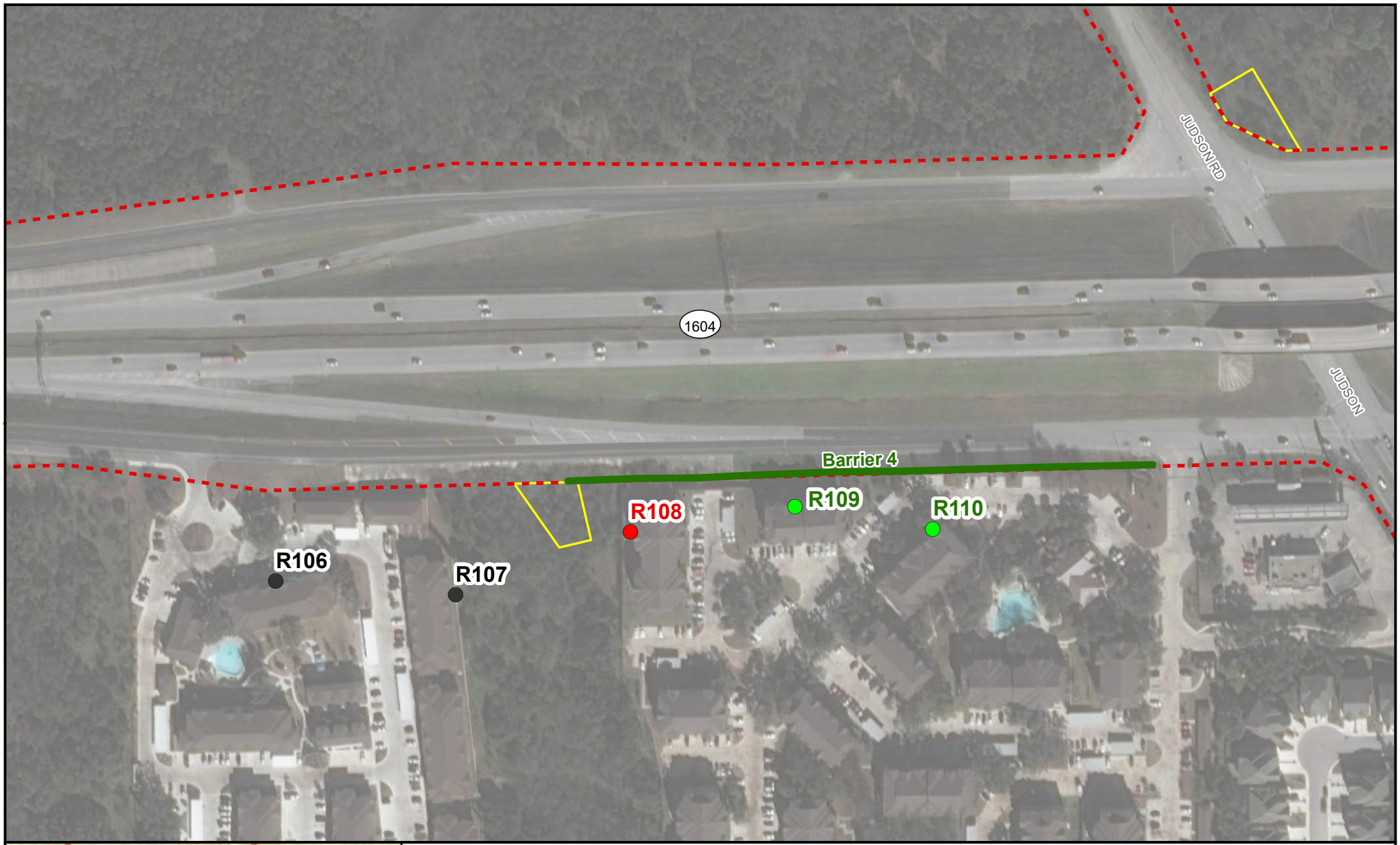

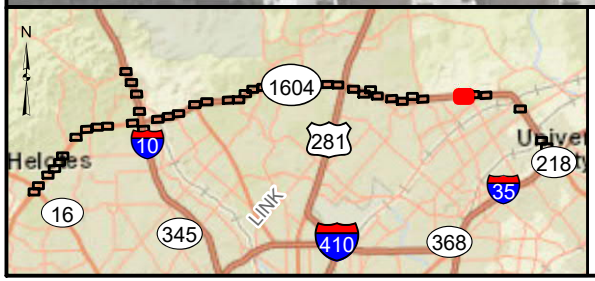

Figure 2

Noise Receiver and Proposed Barrier Locations

Loop 1604 from SH 16 to I-35

Map 41 of 46

Legend

- Benefited Receiver
- Impacted Receiver
- No Impact Receiver
- Proposed Noise Barrier
- Existing Right-of-Way
- Drainage Easement

N

0 100 200

Feet

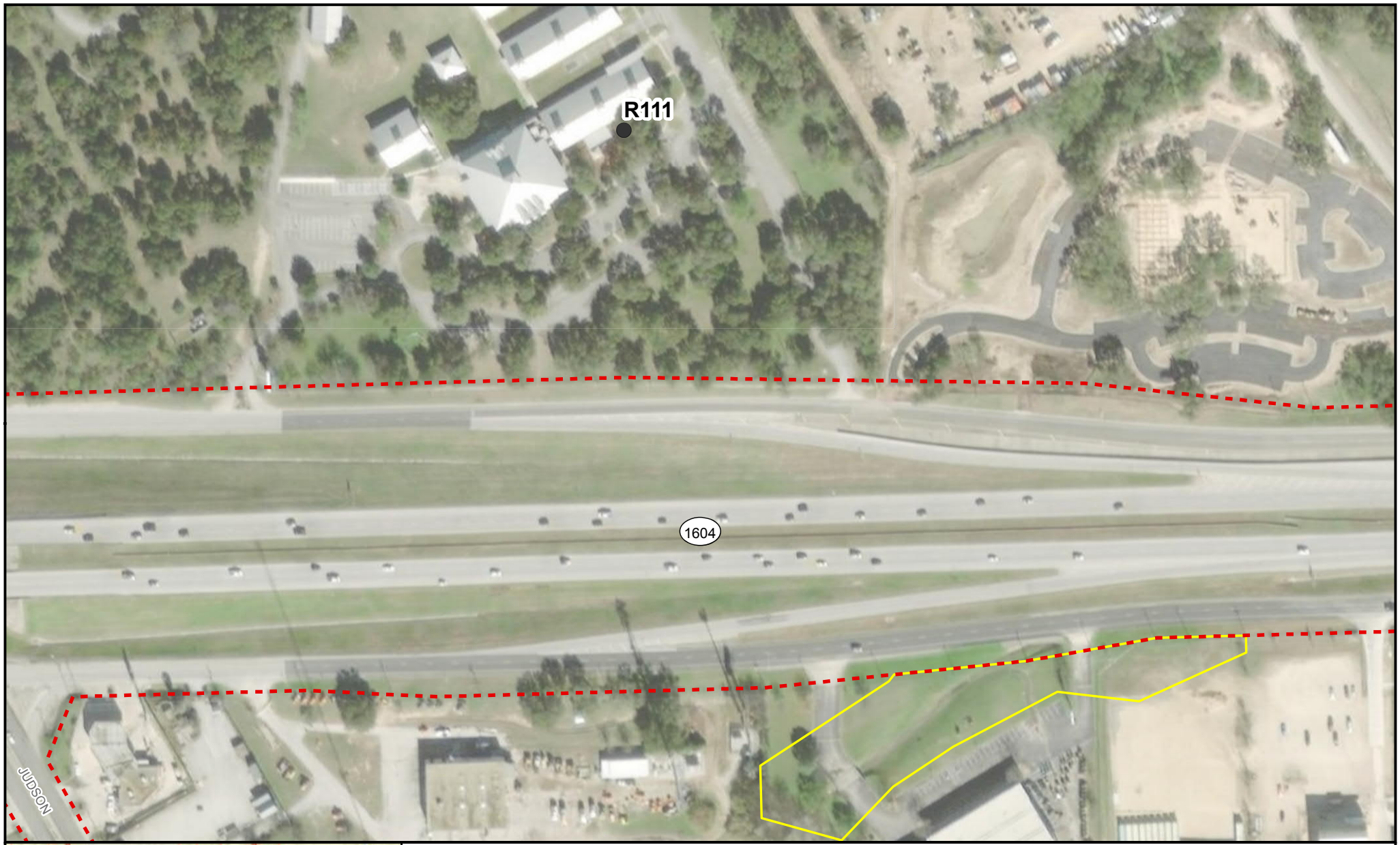

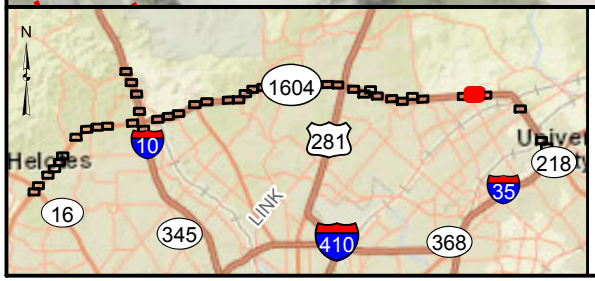

Figure 2

Noise Receiver and Proposed Barrier Locations

Loop 1604 from SH 16 to I-35

Map 42 of 46

Legend

- Benefited Receiver
- Impacted Receiver
- No Impact Receiver
- Proposed Noise Barrier
- Existing Right-of-Way
- Drainage Easement

N

0 100 200

Feet

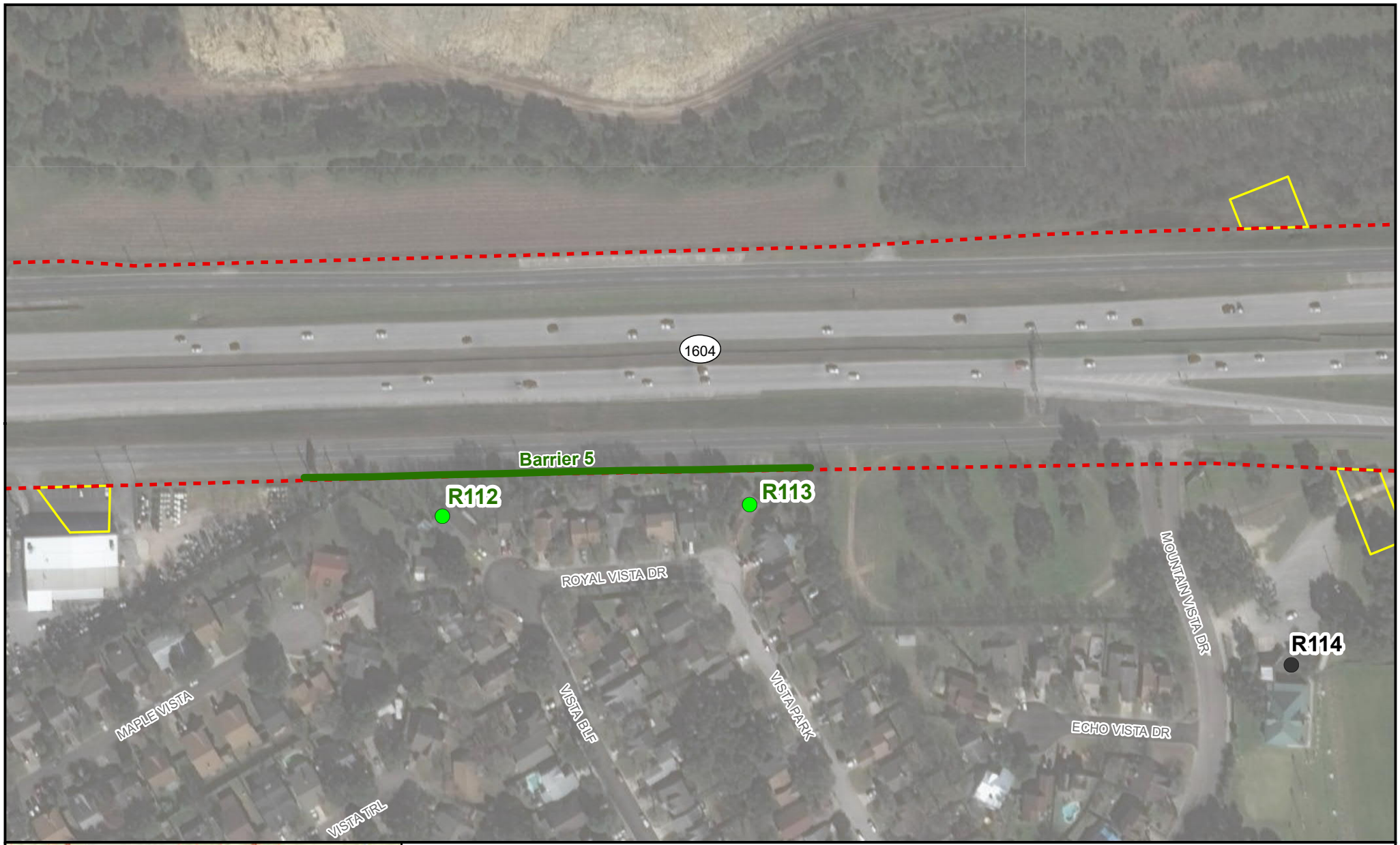

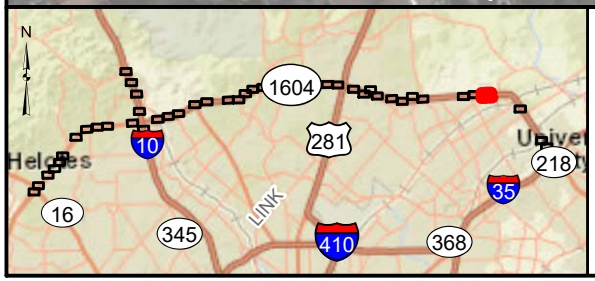

Figure 2

Noise Receiver and Proposed Barrier Locations

Loop 1604 from SH 16 to I-35

Map 43 of 46

Legend

- Benefited Receiver
- Impacted Receiver
- No Impact Receiver
- Proposed Noise Barrier
- Existing Right-of-Way
- Drainage Easement

N

0 100 200

Feet

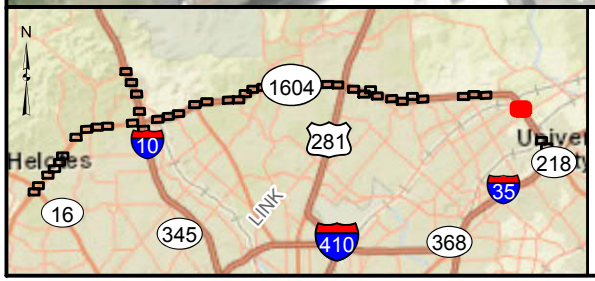

Figure 2

Noise Receiver and Proposed Barrier Locations

Loop 1604 from SH 16 to I-35

Map 44 of 46

Legend

- Benefited Receiver
- Impacted Receiver
- No Impact Receiver
- Proposed Noise Barrier
- Existing Right-of-Way

N

0 100 200

Feet

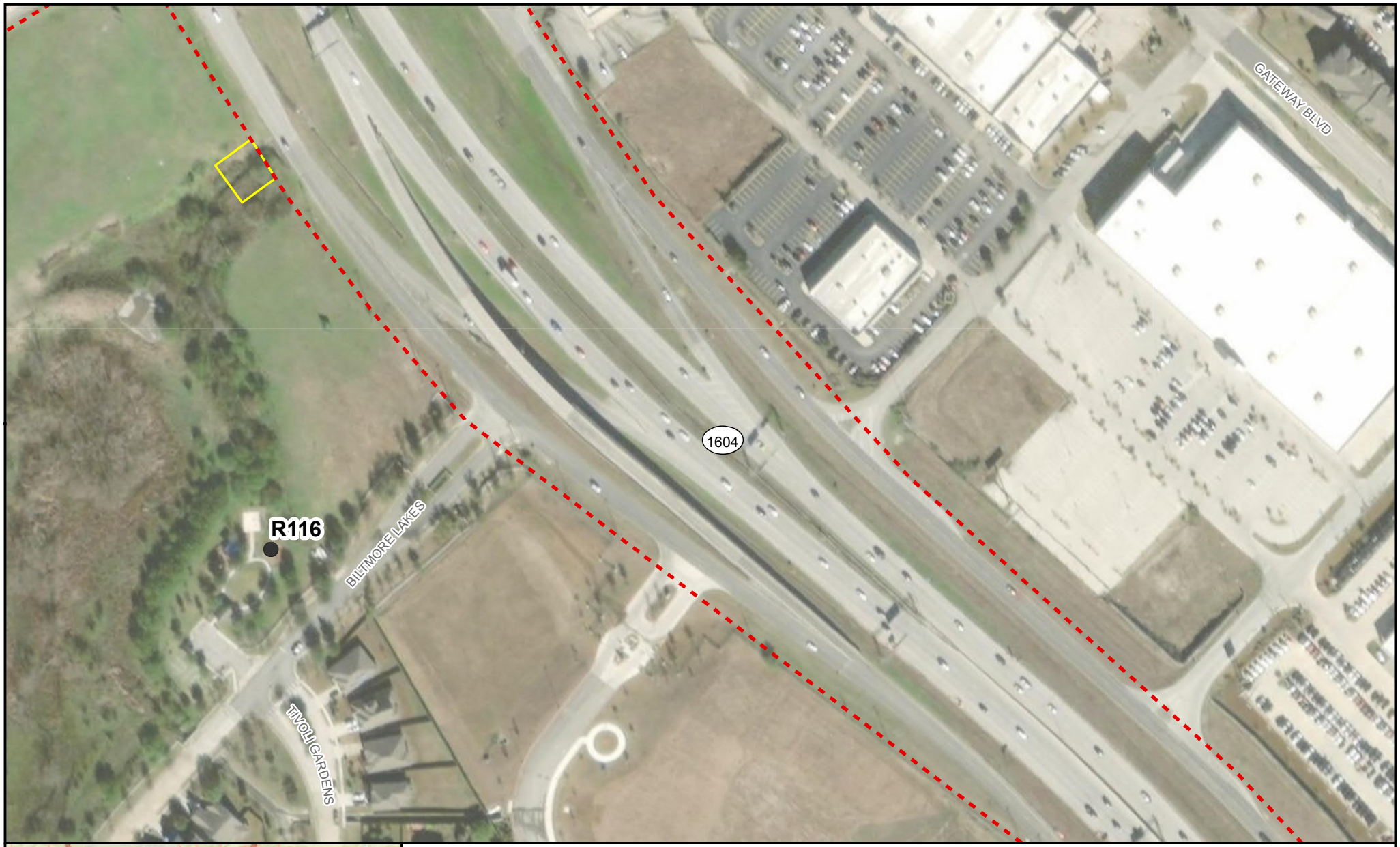

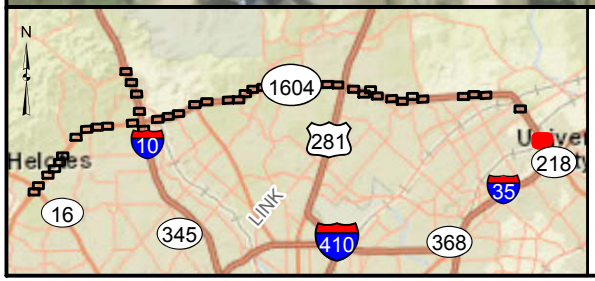

Figure 2

Noise Receiver and Proposed Barrier Locations

Loop 1604 from SH 16 to I-35

Map 45 of 46

Legend

- Benefited Receiver
- Impacted Receiver
- No Impact Receiver
- Proposed Noise Barrier
- Existing Right-of-Way
- Drainage Easement

N

0 100 200

Feet

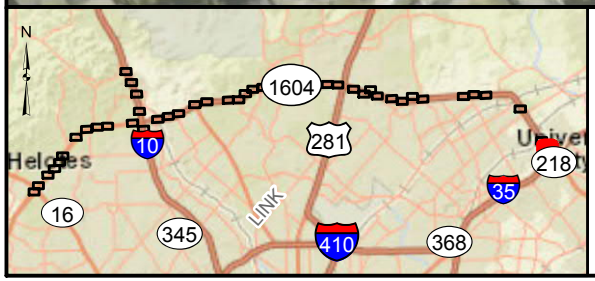

Figure 2

Noise Receiver and Proposed Barrier Locations

Loop 1604 from SH 16 to I-35

Map 46 of 46

Legend

- Benefited Receiver
- Impacted Receiver
- No Impact Receiver
- Proposed Noise Barrier
- Existing Right-of-Way
- Drainage Easement

N

0 100 200

Feet

APPENDIX B

Traffic Data

TRAFFIC ANALYSIS FOR HIGHWAY DESIGN - OPTION C

San Antonio District

November 18, 2019

Description of Location	Average Daily Traffic 2025	Average Daily Traffic 2045	Base Year Dir Dist %	Base Year K Factor	Base Year Percent Trucks ADT	Base Year Percent Trucks DHV	ATHWLD	Percent Tandem Axles in ATHWLD	Total Number of Equivalent 18k Single Axle Load Applications One Direction Expected for a 20 Year Period (2025 to 2045) Flexible Pavement	S N	Rigid Pavement	SLAB
SL 1604 (Proposed) Section 1 **MAINLANES** From SH 16 to IH 10 Bexar County	110,600	156,950	51 - 49	7.1	3.0	2.0	12,200	30	10,342,000	3	12,977,000	8"

Data for Use in Air & Noise Analysis

Vehicle Class	Base Year % of ADT	Base Year % of DHV
Light Duty	97.0	98.0
Medium Duty	1.6	1.1
Heavy Duty	1.4	0.9

Description of Location	Average Daily Traffic 2025	Average Daily Traffic 2055	Base Year Dir Dist %	Base Year K Factor	Base Year Percent Trucks ADT	Base Year Percent Trucks DHV	ATHWLD	Percent Tandem Axles in ATHWLD	Total Number of Equivalent 18k Single Axle Load Applications One Direction Expected for a 30 Year Period (2025 to 2055) Flexible Pavement	S N	Rigid Pavement	SLAB
SL 1604 (Proposed) Section 1 **MAINLANES** From SH 16 to IH 10 Bexar County	110,600	170,950	51 - 49	7.1	3.0	2.0	12,200	30	16,325,000	3	20,485,000	8"

TRAFFIC ANALYSIS FOR HIGHWAY DESIGN - OPTION C

San Antonio District

November 18, 2019

Description of Location	Average Daily Traffic 2025	Average Daily Traffic 2045	Base Year Dir Dist %	Base Year K Factor	Base Year Percent Trucks ADT	Base Year Percent Trucks DHV	ATHWLD	Percent Tandem Axles in ATHWLD	Total Number of Equivalent 18k Single Axle Load Applications One Direction Expected for a 20 Year Period (2025 to 2045) Flexible Pavement	S N	Rigid Pavement	SLAB
SL 1604 (Proposed) Section 1 **FRONTAGE ROADS** From SH 16 to IH 10 Bexar County	91,450	126,800	51 - 49	7.1	1.1	0.8	11,200	30	2,859,000	3	3,370,000	8"

Data for Use in Air & Noise Analysis

Vehicle Class	Base Year % of ADT	Base Year % of DHV
Light Duty	98.9	99.2
Medium Duty	0.6	0.5
Heavy Duty	0.5	0.3

Description of Location	Average Daily Traffic 2025	Average Daily Traffic 2055	Base Year Dir Dist %	Base Year K Factor	Base Year Percent Trucks ADT	Base Year Percent Trucks DHV	ATHWLD	Percent Tandem Axles in ATHWLD	Total Number of Equivalent 18k Single Axle Load Applications One Direction Expected for a 30 Year Period (2025 to 2055) Flexible Pavement	S N	Rigid Pavement	SLAB
SL 1604 (Proposed) Section 1 **FRONTAGE ROADS** From SH 16 to IH 10 Bexar County	91,450	137,600	51 - 49	7.1	1.1	0.8	11,300	30	4,500,000	3	5,305,000	8"

TRAFFIC ANALYSIS FOR HIGHWAY DESIGN - OPTION C

San Antonio District

November 18, 2019

Description of Location	Average Daily Traffic 2025	Average Daily Traffic 2045	Base Year Dir Dist %	Base Year K Factor	Base Year Percent Trucks ADT	Base Year Percent Trucks DHV	ATHWLD	Percent Tandem Axles in ATHWLD	Total Number of Equivalent 18k Single Axle Load Applications One Direction Expected for a 20 Year Period (2025 to 2045) Flexible Pavement	S N	Rigid Pavement	SLAB
SL 1604 (Proposed) Section 2 **MAINLANES** From IH 10 to US 281 Bexar County	183,050	257,150	51 - 49	7.1	4.6	3.0	13,000	30	53,845,000	3	74,691,000	8"

Data for Use in Air & Noise Analysis

Vehicle Class	Base Year % of ADT	Base Year % of DHV
Light Duty	95.4	97.0
Medium Duty	1.3	0.9
Heavy Duty	3.3	2.1

Description of Location	Average Daily Traffic 2025	Average Daily Traffic 2055	Base Year Dir Dist %	Base Year K Factor	Base Year Percent Trucks ADT	Base Year Percent Trucks DHV	ATHWLD	Percent Tandem Axles in ATHWLD	Total Number of Equivalent 18k Single Axle Load Applications One Direction Expected for a 30 Year Period (2025 to 2055) Flexible Pavement	S N	Rigid Pavement	SLAB
SL 1604 (Proposed) Section 2 **MAINLANES** From IH 10 to US 281 Bexar County	183,050	279,600	51 - 49	7.1	4.6	3.0	13,000	30	34,156,000	3	47,378,000	8"

TRAFFIC ANALYSIS FOR HIGHWAY DESIGN - OPTION C

San Antonio District

November 18, 2019

Description of Location	Average Daily Traffic 2025	Average Daily Traffic 2045	Base Year Dir Dist %	Base Year K Factor	Base Year Percent Trucks ADT	Base Year Percent Trucks DHV	ATHWLD	Percent Tandem Axles in ATHWLD	Total Number of Equivalent 18k Single Axle Load Applications One Direction Expected for a 20 Year Period (2025 to 2045) Flexible Pavement	S N	Rigid Pavement	SLAB
SL 1604 Proposed Section 2 **FRONTAGE ROADS** From IH 10 To US 281 Bexar County	70,350	98,500	51 - 49	7.1	3.4	2.6	12,000	30	7,604,000	3	9,685,000	8"

Data for Use in Air & Noise Analysis

Vehicle Class	Base Year % of ADT	Base Year % of DHV
Light Duty	96.6	97.4
Medium Duty	1.0	0.8
Heavy Duty	2.4	1.8

Description of Location	Average Daily Traffic 2025	Average Daily Traffic 2055	Base Year Dir Dist %	Base Year K Factor	Base Year Percent Trucks ADT	Base Year Percent Trucks DHV	ATHWLD	Percent Tandem Axles in ATHWLD	Total Number of Equivalent 18k Single Axle Load Applications One Direction Expected for a 30 Year Period (2025 to 2055) Flexible Pavement	S N	Rigid Pavement	SLAB
SL 1604 Proposed Section 2 **FRONTAGE ROADS** From IH 10 To US 281 Bexar County	70,350	106,950	51 - 49	7.1	3.4	2.6	12,000	30	11,976,000	3	15,254,000	8"

TRAFFIC ANALYSIS FOR HIGHWAY DESIGN - OPTION C

San Antonio District

November 18, 2019

Description of Location	Average Daily Traffic 2025	Average Daily Traffic 2045	Base Year Dir Dist %	Base Year K Factor	Base Year Percent Trucks ADT	Base Year Percent Trucks DHV	ATHWLD	Percent Tandem Axles in ATHWLD	Total Number of Equivalent 18k Single Axle Load Applications One Direction Expected for a 20 Year Period (2025 to 2045) Flexible Pavement	S N	Rigid Pavement	SLAB
SL 1604 (Proposed) Section 3 **MAINLANES** From US 281 To Redland Road Bexar County	168,750	235,300	51 - 49	7.1	5.0	3.3	13,000	30	34,037,000	3	47,243,000	8"

Data for Use in Air & Noise Analysis

Vehicle Class	Base Year % of ADT	Base Year % of DHV
Light Duty	95.0	96.7
Medium Duty	1.4	0.9
Heavy Duty	3.6	2.4

Description of Location	Average Daily Traffic 2025	Average Daily Traffic 2055	Base Year Dir Dist %	Base Year K Factor	Base Year Percent Trucks ADT	Base Year Percent Trucks DHV	ATHWLD	Percent Tandem Axles in ATHWLD	Total Number of Equivalent 18k Single Axle Load Applications One Direction Expected for a 30 Year Period (2025 to 2055) Flexible Pavement	S N	Rigid Pavement	SLAB
SL 1604 (Proposed) Section 3 **MAINLANES** From US 281 To Redland Road Bexar County	168,750	255,950	51 - 49	7.1	5.0	3.3	13,000	30	53,662,000	3	74,481,000	8"

TRAFFIC ANALYSIS FOR HIGHWAY DESIGN - OPTION C

San Antonio District

November 18, 2019

Description of Location	Average Daily Traffic 2025	Average Daily Traffic 2045	Base Year Dir Dist %	Base Year K Factor	Base Year Percent Trucks ADT	Base Year Percent Trucks DHV	ATHWLD	Percent Tandem Axles in ATHWLD	Total Number of Equivalent 18k Single Axle Load Applications One Direction Expected for a 20 Year Period (2025 to 2045) Flexible Pavement	S N	Rigid Pavement	SLAB
SL 1604 Proposed Section 3 **FRONTAGE ROADS** From US 281 To Redland Road Bexar County	41,900	56,550	51 - 49	7.1	4.5	3.4	11,900	30	5,831,000	3	7,450,000	8"

Data for Use in Air & Noise Analysis

Vehicle Class	Base Year % of ADT	Base Year % of DHV
Light Duty	95.5	96.6
Medium Duty	1.3	1.0
Heavy Duty	3.2	2.4

Description of Location	Average Daily Traffic 2025	Average Daily Traffic 2055	Base Year Dir Dist %	Base Year K Factor	Base Year Percent Trucks ADT	Base Year Percent Trucks DHV	ATHWLD	Percent Tandem Axles in ATHWLD	Total Number of Equivalent 18k Single Axle Load Applications One Direction Expected for a 30 Year Period (2025 to 2055) Flexible Pavement	S N	Rigid Pavement	SLAB
SL 1604 Proposed Section 3 **FRONTAGE ROADS** From US 281 To Redland Road Bexar County	41,900	60,450	51 - 49	7.1	4.5	3.4	11,900	30	9,094,000	3	11,618,000	8"

TRAFFIC ANALYSIS FOR HIGHWAY DESIGN - OPTION C

San Antonio District

November 18, 2019

Description of Location	Average Daily Traffic 2025	Average Daily Traffic 2045	Base Year Dir Dist %	Base Year K Factor	Base Year Percent Trucks ADT	Base Year Percent Trucks DHV	ATHWLD	Percent Tandem Axles in ATHWLD	Total Number of Equivalent 18k Single Axle Load Applications One Direction Expected for a 20 Year Period (2025 to 2045) Flexible Pavement	S N	Rigid Pavement	SLAB
SL 1604 Section 4 **MAINLANES** From Redland Road to Nacogdoches Road Bexar County	140,850	198,500	51 - 49	7.1	6.3	4.2	13,000	30	35,920,000	3	49,929,000	8"

Data for Use in Air & Noise Analysis

Vehicle Class	Base Year % of ADT	Base Year % of DHV
Light Duty	93.7	95.8
Medium Duty	1.8	1.2
Heavy Duty	4.5	3.0

Description of Location	Average Daily Traffic 2025	Average Daily Traffic 2055	Base Year Dir Dist %	Base Year K Factor	Base Year Percent Trucks ADT	Base Year Percent Trucks DHV	ATHWLD	Percent Tandem Axles in ATHWLD	Total Number of Equivalent 18k Single Axle Load Applications One Direction Expected for a 30 Year Period (2025 to 2055) Flexible Pavement	S N	Rigid Pavement	SLAB
SL 1604 Section 4 **MAINLANES** From Redland Road to Nacogdoches Road Bexar County	140,850	216,500	51 - 49	7.1	6.3	4.2	13,000	30	56,733,000	3	78,860,000	8"

TRAFFIC ANALYSIS FOR HIGHWAY DESIGN - OPTION C

San Antonio District

November 18, 2019

Description of Location	Average Daily Traffic 2025	Average Daily Traffic 2045	Base Year Dir Dist %	Base Year K Factor	Base Year Percent Trucks ADT	Base Year Percent Trucks DHV	ATHWLD	Percent Tandem Axles in ATHWLD	Total Number of Equivalent 18k Single Axle Load Applications One Direction Expected for a 20 Year Period (2025 to 2045) Flexible Pavement	S N	Rigid Pavement	SLAB
SL 1604 Proposed Section 4 **FRONTAGE ROADS** From Redland Road To Nacogdoches Road Bexar County	70,150	95,700	51 - 49	7.1	2.3	1.7	11,800	30	5,114,000	3	6,476,000	8"

Data for Use in Air & Noise Analysis

Vehicle Class	Base Year % of ADT	Base Year % of DHV
Light Duty	97.7	98.3
Medium Duty	0.7	0.5
Heavy Duty	1.6	1.2

Description of Location	Average Daily Traffic 2025	Average Daily Traffic 2055	Base Year Dir Dist %	Base Year K Factor	Base Year Percent Trucks ADT	Base Year Percent Trucks DHV	ATHWLD	Percent Tandem Axles in ATHWLD	Total Number of Equivalent 18k Single Axle Load Applications One Direction Expected for a 30 Year Period (2025 to 2055) Flexible Pavement	S N	Rigid Pavement	SLAB
SL 1604 Proposed Section 4 **FRONTAGE ROADS** From Redland Road To Nacogdoches Road Bexar County	70,150	102,900	51 - 49	7.1	2.3	1.7	11,800	30	8,003,000	3	10,136,000	8"

TRAFFIC ANALYSIS FOR HIGHWAY DESIGN - OPTION C

San Antonio District

November 18, 2019

Description of Location	Average Daily Traffic 2025	Average Daily Traffic 2045	Base Year Dir Dist %	Base Year K Factor	Base Year Percent Trucks ADT	Base Year Percent Trucks DHV	ATHWLD	Percent Tandem Axles in ATHWLD	Total Number of Equivalent 18k Single Axle Load Applications One Direction Expected for a 20 Year Period (2025 to 2045) Flexible Pavement	S N	Rigid Pavement	SLAB
SL 1604 Proposed Section 5 **MAINLANES** From Nacogdoches Road To Gateway Blvd. Bexar County	125,600	177,200	51 - 49	7.1	3.6	2.4	12,500	40	18,462,000	3	25,555,000	8"

Data for Use in Air & Noise Analysis

Vehicle Class	Base Year % of ADT	Base Year % of DHV
Light Duty	96.4	97.6
Medium Duty	1.0	0.7
Heavy Duty	2.6	1.7

Description of Location	Average Daily Traffic 2025	Average Daily Traffic 2055	Base Year Dir Dist %	Base Year K Factor	Base Year Percent Trucks ADT	Base Year Percent Trucks DHV	ATHWLD	Percent Tandem Axles in ATHWLD	Total Number of Equivalent 18k Single Axle Load Applications One Direction Expected for a 30 Year Period (2025 to 2055) Flexible Pavement	S N	Rigid Pavement	SLAB
SL 1604 Proposed Section 5 **MAINLANES** From Nacogdoches Road To Gateway Blvd. Bexar County	125,600	192,800	51 - 49	7.1	3.6	2.4	12,500	40	29,119,000	3	40,306,000	8"

TRAFFIC ANALYSIS FOR HIGHWAY DESIGN - OPTION C

San Antonio District

November 18, 2019

Description of Location	Average Daily Traffic 2025	Average Daily Traffic 2045	Base Year Dir Dist %	Base Year K Factor	Base Year Percent Trucks ADT	Base Year Percent Trucks DHV	ATHWLD	Percent Tandem Axles in ATHWLD	Total Number of Equivalent 18k Single Axle Load Applications One Direction Expected for a 20 Year Period (2025 to 2045) Flexible Pavement	S N	Rigid Pavement	SLAB
SL 1604 Proposed Section 5 **FRONTAGE ROADS** From Nacogdoches Road To Gateway Blvd. Bexar County	61,000	81,350	51 - 49	7.1	1.6	1.2	11,300	40	3,103,000	3	3,900,000	8"

Data for Use in Air & Noise Analysis

Vehicle Class	Base Year % of ADT	Base Year % of DHV
Light Duty	98.4	98.8
Medium Duty	0.5	0.4
Heavy Duty	1.1	0.8

Description of Location	Average Daily Traffic 2025	Average Daily Traffic 2055	Base Year Dir Dist %	Base Year K Factor	Base Year Percent Trucks ADT	Base Year Percent Trucks DHV	ATHWLD	Percent Tandem Axles in ATHWLD	Total Number of Equivalent 18k Single Axle Load Applications One Direction Expected for a 30 Year Period (2025 to 2055) Flexible Pavement	S N	Rigid Pavement	SLAB
SL 1604 Proposed Section 5 **FRONTAGE ROADS** From Nacogdoches Road To Gateway Blvd. Bexar County	61,000	87,650	51 - 49	7.1	1.6	1.2	11,300	40	4,860,000	3	6,108,000	8"

TRAFFIC ANALYSIS FOR HIGHWAY DESIGN - OPTION C

San Antonio District

November 18, 2019

Description of Location	Average Daily Traffic 2025	Average Daily Traffic 2045	Base Year Dir Dist %	Base Year K Factor	Base Year Percent Trucks ADT	Base Year Percent Trucks DHV	ATHWLD	Percent Tandem Axles in ATHWLD	Total Number of Equivalent 18k Single Axle Load Applications One Direction Expected for a 20 Year Period (2025 to 2045) Flexible Pavement	S N	Rigid Pavement	SLAB
SL 1604 Proposed Section 6 **MAINLANES** From Gateway Blvd. To IH 35 Bexar County	61,250	86,650	51 - 49	7.1	6.8	4.5	12,400	40	16,883,000	3	23,477,000	8"

Data for Use in Air & Noise Analysis

Vehicle Class	Base Year % of ADT	Base Year % of DHV
Light Duty	93.2	95.5
Medium Duty	2.0	1.3
Heavy Duty	4.8	3.2

Description of Location	Average Daily Traffic 2025	Average Daily Traffic 2055	Base Year Dir Dist %	Base Year K Factor	Base Year Percent Trucks ADT	Base Year Percent Trucks DHV	ATHWLD	Percent Tandem Axles in ATHWLD	Total Number of Equivalent 18k Single Axle Load Applications One Direction Expected for a 30 Year Period (2025 to 2055) Flexible Pavement	S N	Rigid Pavement	SLAB
SL 1604 Proposed Section 6 **MAINLANES** From Gateway Blvd. To IH 35 Bexar County	61,250	94,250	51 - 49	7.1	6.8	4.5	12,400	40	26,627,000	3	37,027,000	8"

TRAFFIC ANALYSIS FOR HIGHWAY DESIGN - OPTION C

San Antonio District

November 18, 2019

Description of Location	Average Daily Traffic 2025	Average Daily Traffic 2045	Base Year Dir Dist %	Base Year K Factor	Base Year Percent Trucks ADT	Base Year Percent Trucks DHV	ATHWLD	Percent Tandem Axles in ATHWLD	Total Number of Equivalent 18k Single Axle Load Applications One Direction Expected for a 20 Year Period (2025 to 2045) Flexible Pavement	S N	Rigid Pavement	SLAB
SL 1604 Proposed Section 6 **DIRECT CONNECTORS** From I-35 To Lookout Road Bexar County	30,250	42,600	51 - 49	7.1	14.9	9.8	12,500	40	18,122,000	3	25,273,000	8"

Data for Use in Air & Noise Analysis

Vehicle Class	Base Year % of ADT	Base Year % of DHV
Light Duty	85.1	90.2
Medium Duty	4.3	2.8
Heavy Duty	10.6	7.0

Description of Location	Average Daily Traffic 2025	Average Daily Traffic 2055	Base Year Dir Dist %	Base Year K Factor	Base Year Percent Trucks ADT	Base Year Percent Trucks DHV	ATHWLD	Percent Tandem Axles in ATHWLD	Total Number of Equivalent 18k Single Axle Load Applications One Direction Expected for a 30 Year Period (2025 to 2055) Flexible Pavement	S N	Rigid Pavement	SLAB
SL 1604 Proposed Section 6 **DIRECT CONNECTORS** From I-35 To Lookout Road Bexar County	30,250	46,250	51 - 49	7.1	14.9	9.8	12,500	40	28,546,000	3	39,809,000	8"

TRAFFIC ANALYSIS FOR HIGHWAY DESIGN - OPTION C

San Antonio District

November 18, 2019

Description of Location	Average Daily Traffic 2025	Average Daily Traffic 2045	Base Year Dir Dist %	Base Year K Factor	Base Year Percent Trucks ADT	Base Year Percent Trucks DHV	ATHWLD	Percent Tandem Axles in ATHWLD	Total Number of Equivalent 18k Single Axle Load Applications One Direction Expected for a 20 Year Period (2025 to 2045) Flexible Pavement	S N	Rigid Pavement	SLAB
SL 1604 Proposed Section 6 **FRONTAGE ROADS (IH 35)** From Gateway Blvd. To IH 35 Bexar County	17,300	22,800	51 - 49	7.1	4.0	3.0	11,000	40	2,116,000	3	2,701,000	8"

Data for Use in Air & Noise Analysis

Vehicle Class	Base Year % of ADT	Base Year % of DHV
Light Duty	96.0	97.0
Medium Duty	1.2	0.9
Heavy Duty	2.8	2.1

Description of Location	Average Daily Traffic 2025	Average Daily Traffic 2055	Base Year Dir Dist %	Base Year K Factor	Base Year Percent Trucks ADT	Base Year Percent Trucks DHV	ATHWLD	Percent Tandem Axles in ATHWLD	Total Number of Equivalent 18k Single Axle Load Applications One Direction Expected for a 30 Year Period (2025 to 2055) Flexible Pavement	S N	Rigid Pavement	SLAB
SL 1604 Proposed Section 6 **FRONTAGE ROADS (IH 35)** From Gateway Blvd. To IH 35 Bexar County	17,300	24,600	51 - 49	7.1	4.0	3.0	11,100	40	3,317,000	3	4,233,000	8"

TRAFFIC ANALYSIS FOR HIGHWAY DESIGN - OPTION C

San Antonio District

November 18, 2019

Description of Location	Average Daily Traffic 2025	Average Daily Traffic 2045	Base Year Dir Dist %	Base Year K Factor	Base Year Percent Trucks ADT	Base Year Percent Trucks DHV	ATHWLD	Percent Tandem Axles in ATHWLD	Total Number of Equivalent 18k Single Axle Load Applications One Direction Expected for a 20 Year Period (2025 to 2045) Flexible Pavement	S N	Rigid Pavement	SLAB
SL 1604 Proposed Section 6 **FRONTAGE ROADS (SL 1604)** From Gateway Blvd. To IH 35 Bexar County	71,350	100,400	51 - 49	7.1	1.6	1.2	11,400	40	3,744,000	3	4,705,000	8"

Data for Use in Air & Noise Analysis

Vehicle Class	Base Year % of ADT	Base Year % of DHV
Light Duty	98.4	98.8
Medium Duty	0.5	0.4
Heavy Duty	1.1	0.8

Description of Location	Average Daily Traffic 2025	Average Daily Traffic 2055	Base Year Dir Dist %	Base Year K Factor	Base Year Percent Trucks ADT	Base Year Percent Trucks DHV	ATHWLD	Percent Tandem Axles in ATHWLD	Total Number of Equivalent 18k Single Axle Load Applications One Direction Expected for a 30 Year Period (2025 to 2055) Flexible Pavement	S N	Rigid Pavement	SLAB
SL 1604 Proposed Section 6 **FRONTAGE ROADS (SL 1604)** From Gateway Blvd. To IH 35 Bexar County	71,350	109,250	51 - 49	7.1	1.6	1.2	11,500	40	5,905,000	3	7,422,000	8"

TRAFFIC ANALYSIS FOR HIGHWAY DESIGN - OPTION C

San Antonio District **January 10, 2020**

Description of Location	Average Daily Traffic 2025	Average Daily Traffic 2045	Base Year Dir Dist %	Base Year K Factor	Base Year Percent Trucks ADT	Base Year Percent Trucks DHV	ATHWLD	Percent Tandem Axles in ATHWLD	Total Number of Equivalent 18k Single Axle Load Applications One Direction Expected for a 20 Year Period (2025 to 2045) Flexible Pavement	S N	Rigid Pavement	SLAB
SL 1604 Proposed **I-10 Mainlanes** Section #1 From De Zavala to SL 1604 To SI 1604 Bexar County	216,650	307,550	51 - 49	8.4	4.7	2.1	13,100	30	39,903,000	3	54,311,000	8"

Data for Use in Air & Noise Analysis

Vehicle Class	Base Year % of ADT	Base Year % of DHV
Light Duty	95.3	97.9
Medium Duty	1.7	0.8
Heavy Duty	3.0	1.3

Description of Location	Average Daily Traffic 2025	Average Daily Traffic 2055	Base Year Dir Dist %	Base Year K Factor	Base Year Percent Trucks ADT	Base Year Percent Trucks DHV	ATHWLD	Percent Tandem Axles in ATHWLD	Total Number of Equivalent 18k Single Axle Load Applications One Direction Expected for a 30 Year Period (2025 to 2055) Flexible Pavement	S N	Rigid Pavement	SLAB
SL 1604 Proposed **I-10 Mainlanes** Section #1 From De Zavala to SL 1604 To SI 1604	216,650	335,000	51 - 49	8.4	4.7	2.1	13,100	30	62,988,000	3	85,733,000	8"

TRAFFIC ANALYSIS FOR HIGHWAY DESIGN - OPTION C

San Antonio District **January 10, 2020**

Description of Location	Average Daily Traffic 2025	Average Daily Traffic 2045	Base Year Dir Dist %	Base Year K Factor	Base Year Percent Trucks ADT	Base Year Percent Trucks DHV	ATHWLD	Percent Tandem Axles in ATHWLD	Total Number of Equivalent 18k Single Axle Load Applications One Direction Expected for a 20 Year Period (2025 to 2045) Flexible Pavement	S N	Rigid Pavement	SLAB
SL 1604 Proposed **I-10 Mainlanes** Section #2 At SL 1604 Bexar County	117,250	166,400	51 - 49	8.4	6.5	2.9	13,000	30	29,737,000	3	40,561,000	8"

Data for Use in Air & Noise Analysis

Vehicle Class	Base Year % of ADT	Base Year % of DHV
Light Duty	93.5	97.1
Medium Duty	2.3	1.0
Heavy Duty	4.2	1.9

Description of Location	Average Daily Traffic 2025	Average Daily Traffic 2055	Base Year Dir Dist %	Base Year K Factor	Base Year Percent Trucks ADT	Base Year Percent Trucks DHV	ATHWLD	Percent Tandem Axles in ATHWLD	Total Number of Equivalent 18k Single Axle Load Applications One Direction Expected for a 30 Year Period (2025 to 2055) Flexible Pavement	S N	Rigid Pavement	SLAB
SL 1604 Proposed **I-10 Mainlanes** Section #2 At SL 1604 Bexar County	117,250	181,200	51 - 49	8.4	6.5	2.9	13,000	30	46,932,000	3	64,015,000	8"

TRAFFIC ANALYSIS FOR HIGHWAY DESIGN - OPTION C

San Antonio District **January 10, 2020**

Description of Location	Average Daily Traffic 2025	Average Daily Traffic 2045	Base Year Dir Dist %	Base Year K Factor	Base Year Percent Trucks ADT	Base Year Percent Trucks DHV	ATHWLD	Percent Tandem Axles in ATHWLD	Total Number of Equivalent 18k Single Axle Load Applications One Direction Expected for a 20 Year Period (2025 to 2045) Flexible Pavement	S N	Rigid Pavement	SLAB
SL 1604 Proposed **I-10 Mainlanes** Section #3 From SL 1604 To Camp Bullis Bexar County	148,800	211,200	51 - 49	8.4	6.6	3.0	13,100	30	42,385,000	3	59,473,000	8"

Data for Use in Air & Noise Analysis

Vehicle Class	Base Year % of ADT	Base Year % of DHV
Light Duty	93.4	97.0
Medium Duty	1.5	0.7
Heavy Duty	5.1	2.3

Description of Location	Average Daily Traffic 2025	Average Daily Traffic 2055	Base Year Dir Dist %	Base Year K Factor	Base Year Percent Trucks ADT	Base Year Percent Trucks DHV	ATHWLD	Percent Tandem Axles in ATHWLD	Total Number of Equivalent 18k Single Axle Load Applications One Direction Expected for a 30 Year Period (2025 to 2055) Flexible Pavement	S N	Rigid Pavement	SLAB
SL 1604 Proposed **I-10 Mainlanes** Section #3 From SL 1604 To Camp Bullis Bexar County	148,800	230,100	51 - 49	8.4	6.6	3.0	13,100	30	66,913,000	3	93,888,000	8"

TRAFFIC ANALYSIS FOR HIGHWAY DESIGN - OPTION C

San Antonio District **January 10, 2020**

Description of Location	Average Daily Traffic 2025	Average Daily Traffic 2045	Base Year Dir Dist %	Base Year K Factor	Base Year Percent Trucks ADT	Base Year Percent Trucks DHV	ATHWLD	Percent Tandem Axles in ATHWLD	Total Number of Equivalent 18k Single Axle Load Applications One Direction Expected for a 20 Year Period (2025 to 2045) Flexible Pavement	S N	Rigid Pavement	SLAB
SL 1604 Proposed **I-10 Frontage Roads** Section #1 From De Zavala to SL 1604 To SL 1604 Bexar County	75,400	101,550	51 - 49	8.4	3.4	2.6	12,000	30	7,281,000	3	8,892,000	8"

Data for Use in Air & Noise Analysis

Vehicle Class	Base Year % of ADT	Base Year % of DHV
Light Duty	96.6	97.4
Medium Duty	2.1	1.6
Heavy Duty	1.3	1.0

Description of Location	Average Daily Traffic 2025	Average Daily Traffic 2055	Base Year Dir Dist %	Base Year K Factor	Base Year Percent Trucks ADT	Base Year Percent Trucks DHV	ATHWLD	Percent Tandem Axles in ATHWLD	Total Number of Equivalent 18k Single Axle Load Applications One Direction Expected for a 30 Year Period (2025 to 2055) Flexible Pavement	S N	Rigid Pavement	SLAB
SL 1604 Proposed **I-10 Frontage Roads** Section #1 From De Zavala to SL 1604 To SL 1604 Bexar County	75,400	109,600	51 - 49	8.4	3.4	2.6	12,100	30	11,418,000	3	13,946,000	8"

TRAFFIC ANALYSIS FOR HIGHWAY DESIGN - OPTION C

San Antonio District **January 10, 2020**

Description of Location	Average Daily Traffic 2025	Average Daily Traffic 2045	Base Year Dir Dist %	Base Year K Factor	Base Year Percent Trucks ADT	Base Year Percent Trucks DHV	ATHWLD	Percent Tandem Axles in ATHWLD	Total Number of Equivalent 18k Single Axle Load Applications One Direction Expected for a 20 Year Period (2025 to 2045) Flexible Pavement	S N	Rigid Pavement	SLAB
SL 1604 Proposed **I-10 Frontage Roads** Section #2 At SL 1604 Bexar County	34,650	46,250	51 - 49	8.4	3.8	2.9	11,500	30	3,710,000	3	4,537,000	8"

Data for Use in Air & Noise Analysis

Vehicle Class	Base Year % of ADT	Base Year % of DHV
Light Duty	96.2	97.1
Medium Duty	2.3	1.7
Heavy Duty	1.5	1.2

Description of Location	Average Daily Traffic 2025	Average Daily Traffic 2055	Base Year Dir Dist %	Base Year K Factor	Base Year Percent Trucks ADT	Base Year Percent Trucks DHV	ATHWLD	Percent Tandem Axles in ATHWLD	Total Number of Equivalent 18k Single Axle Load Applications One Direction Expected for a 30 Year Period (2025 to 2055) Flexible Pavement	S N	Rigid Pavement	SLAB
SL 1604 Proposed **I-10 Frontage Roads** Section #2 At SL 1604 Bexar County	34,650	50,000	51 - 49	8.4	3.8	2.9	11,500	30	5,822,000	3	7,121,000	8"

TRAFFIC ANALYSIS FOR HIGHWAY DESIGN - OPTION C

San Antonio District **January 10, 2020**

Description of Location	Average Daily Traffic 2025	Average Daily Traffic 2045	Base Year Dir Dist %	Base Year K Factor	Base Year Percent Trucks ADT	Base Year Percent Trucks DHV	ATHWLD	Percent Tandem Axles in ATHWLD	Total Number of Equivalent 18k Single Axle Load Applications One Direction Expected for a 20 Year Period (2025 to 2045) Flexible Pavement	S N	Rigid Pavement	SLAB
SL 1604 Proposed **I-10 Frontage Roads** Section #3 From SL 1604 To Camp Bullis Bexar County	55,000	75,950	51 - 49	8.4	3.5	2.6	11,900	30	5,542,000	3	6,772,000	8"

Data for Use in Air & Noise Analysis

Vehicle Class	Base Year % of ADT	Base Year % of DHV
Light Duty	96.5	97.4
Medium Duty	2.1	1.6
Heavy Duty	1.4	1.0

Description of Location	Average Daily Traffic 2025	Average Daily Traffic 2055	Base Year Dir Dist %	Base Year K Factor	Base Year Percent Trucks ADT	Base Year Percent Trucks DHV	ATHWLD	Percent Tandem Axles in ATHWLD	Total Number of Equivalent 18k Single Axle Load Applications One Direction Expected for a 30 Year Period (2025 to 2055) Flexible Pavement	S N	Rigid Pavement	SLAB
SL 1604 Proposed **I-10 Frontage Roads** Section #3 From SL 1604 To Camp Bullis Bexar County	55,000	82,200	51 - 49	8.4	3.5	2.6	11,900	30	8,710,000	3	10,641,000	8"

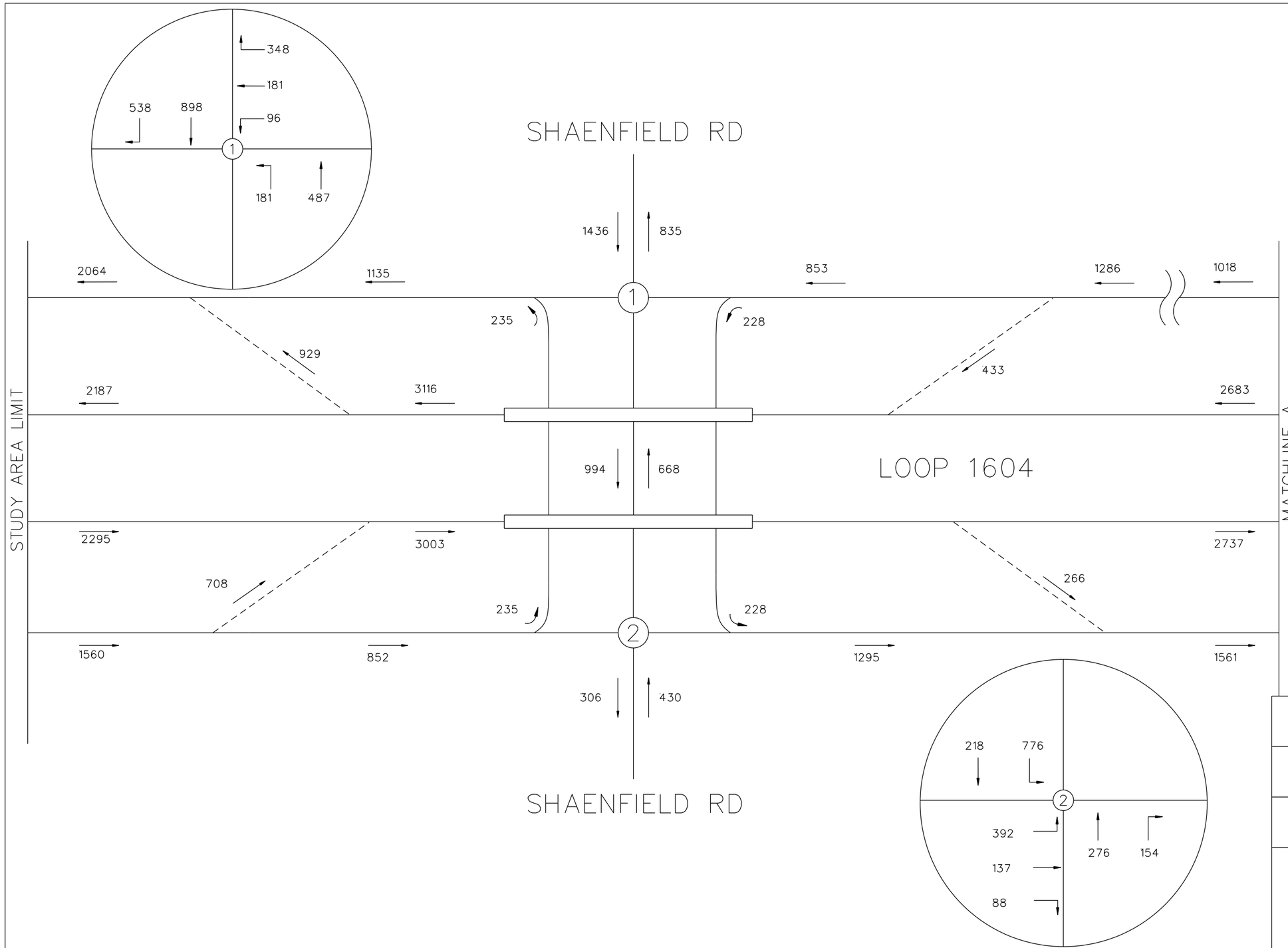

N.T.S.

LEGEND

→ = TRAVEL DIRECTION

XXXXX = YEAR 2018 AM PEAK TRAFFIC

INTERIM REVIEW

THIS DOCUMENT IS RELEASED FOR THE PURPOSE OF INTERIM REVIEW UNDER THE AUTHORITY OF

ANDREW J. BALLARD, PE 59027 JAN. 31, 2019

IT IS NOT TO BE USED FOR CONSTRUCTION PURPOSES.

© 2018

Texas Department of Transportation

TEDSI INFRASTRUCTURE GROUP
Consulting Engineers
TBPE F-1640
1201 E. Expressway 83
Mission, Texas 78572
(956) 424-7898

JACOBS®
JACOBS ENGINEERING GROUP INC. FIRM #2966

LOOP 1604
EXISTING AM PEAK TRAFFIC

SHEET 1 OF 34

DESIGN CK	FED.RD. DIV.NO.			HIGHWAY NO.
CHECK PK				LOOP 1604
	STATE	DISTRICT	COUNTY	SHEET NO.
GRAPHICS CC	TX	SAN ANTONIO	BEXAR	1
CHECK PK	CONTROL	SECTION	JOB	
	2452	01	068	

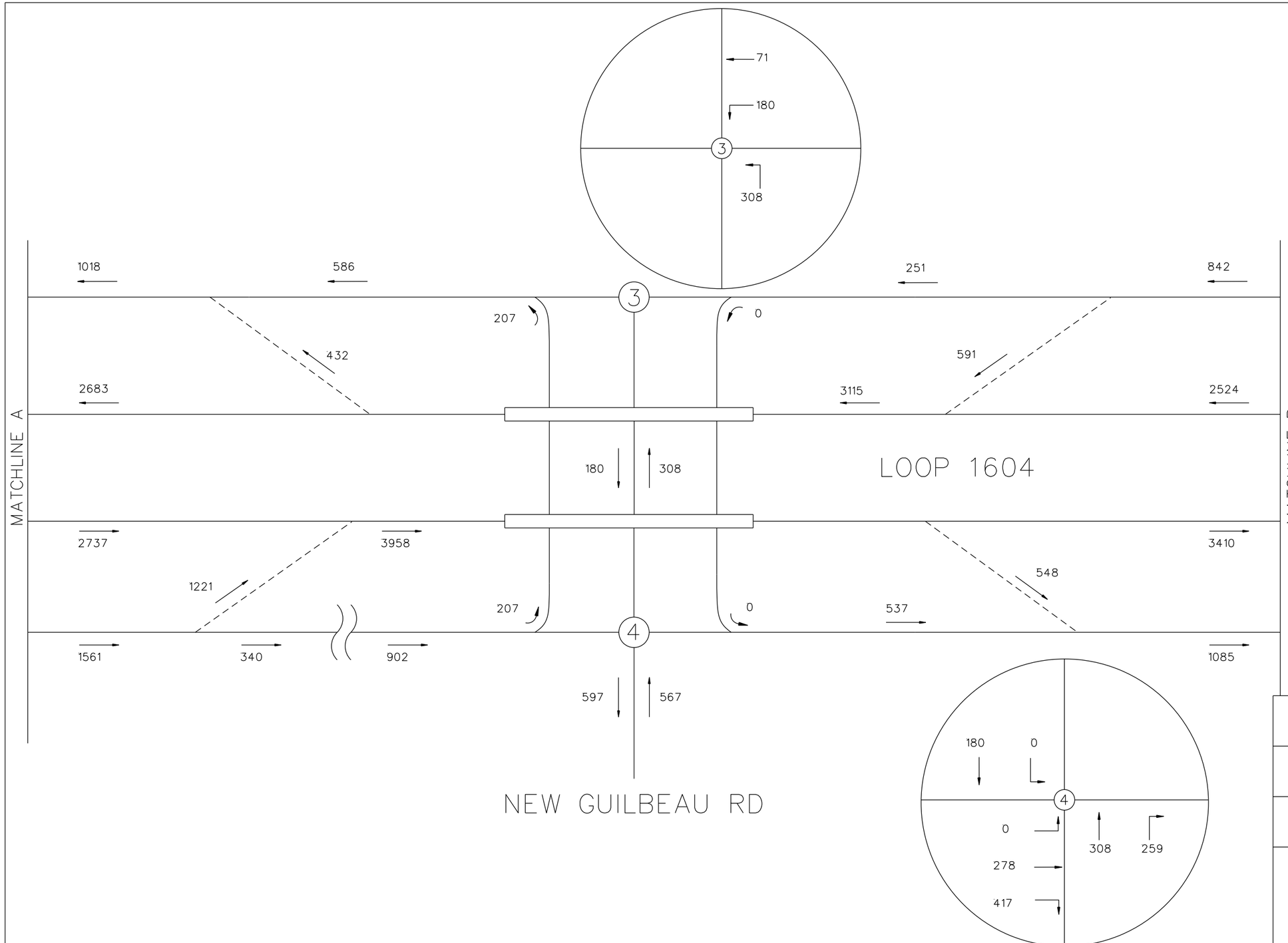

N.T.S.

LEGEND

→ = TRAVEL DIRECTION

XXXXX = YEAR 2018 AM PEAK TRAFFIC

INTERIM REVIEW

THIS DOCUMENT IS RELEASED FOR THE PURPOSE OF INTERIM REVIEW UNDER THE AUTHORITY OF

ANDREW J. BALLARD, PE 59027 JAN. 31, 2019

IT IS NOT TO BE USED FOR CONSTRUCTION PURPOSES.

© 2018

Texas Department of Transportation

TEDSI INFRASTRUCTURE GROUP
Consulting Engineers
TBPE F-1640
1201 E. Expressway 83
Mission, Texas 78572
(956) 424-7898

JACOBS®
JACOBS ENGINEERING GROUP INC. FIRM #2966

LOOP 1604
EXISTING AM PEAK TRAFFIC

SHEET 2 OF 34

DESIGN CK	FED.RD. DIV.NO.			HIGHWAY NO.
CHECK PK				LOOP 1604
	STATE	DISTRICT	COUNTY	SHEET NO.
GRAPHICS CC	TX	SAN ANTONIO	BEXAR	2
	CONTROL	SECTION	JOB	
CHECK PK	2452	01	068	

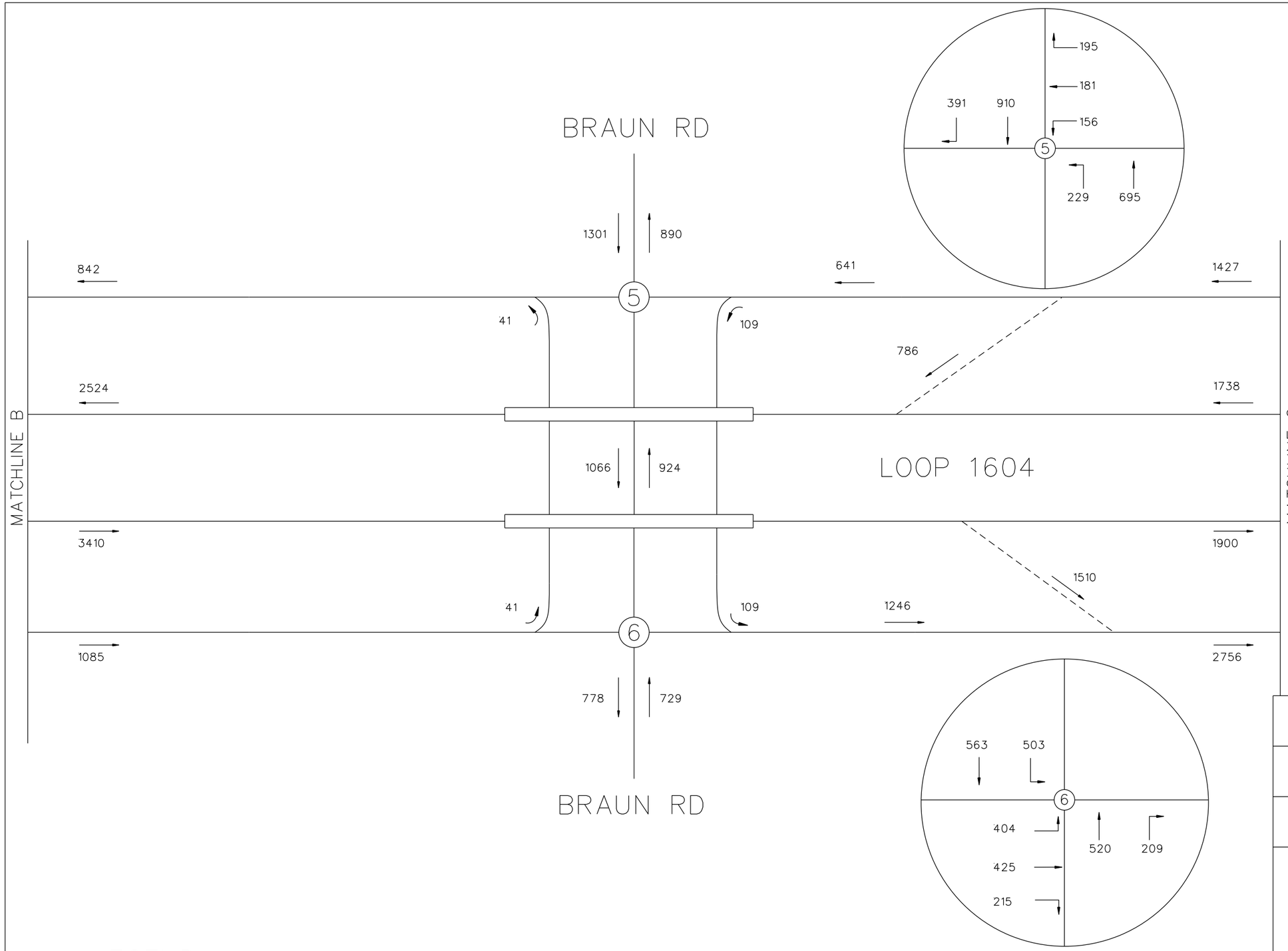

N.T.S.

LEGEND

→ = TRAVEL DIRECTION

XXXXX = YEAR 2018 AM PEAK TRAFFIC

INTERIM REVIEW

THIS DOCUMENT IS RELEASED FOR THE PURPOSE OF INTERIM REVIEW UNDER THE AUTHORITY OF

ANDREW J. BALLARD, PE 59027 JAN. 31, 2019

IT IS NOT TO BE USED FOR CONSTRUCTION PURPOSES.

© 2018

Texas Department of Transportation

TEDSI INFRASTRUCTURE GROUP
Consulting Engineers
1201 E. Expressway 83
Mission, Texas 78572
(956) 424-7898
TBPE F-1640

JACOBS
JACOBS ENGINEERING GROUP INC. FIRM #2966

LOOP 1604
EXISTING AM PEAK TRAFFIC

SHEET 3 OF 34

DESIGN CK	FED.RD. DIV.NO.			HIGHWAY NO.
CHECK PK				LOOP 1604
	STATE	DISTRICT	COUNTY	SHEET NO.
GRAPHICS CC	TX	SAN ANTONIO	BEXAR	3
	CONTROL	SECTION	JOB	
CHECK PK	2452	01	068	

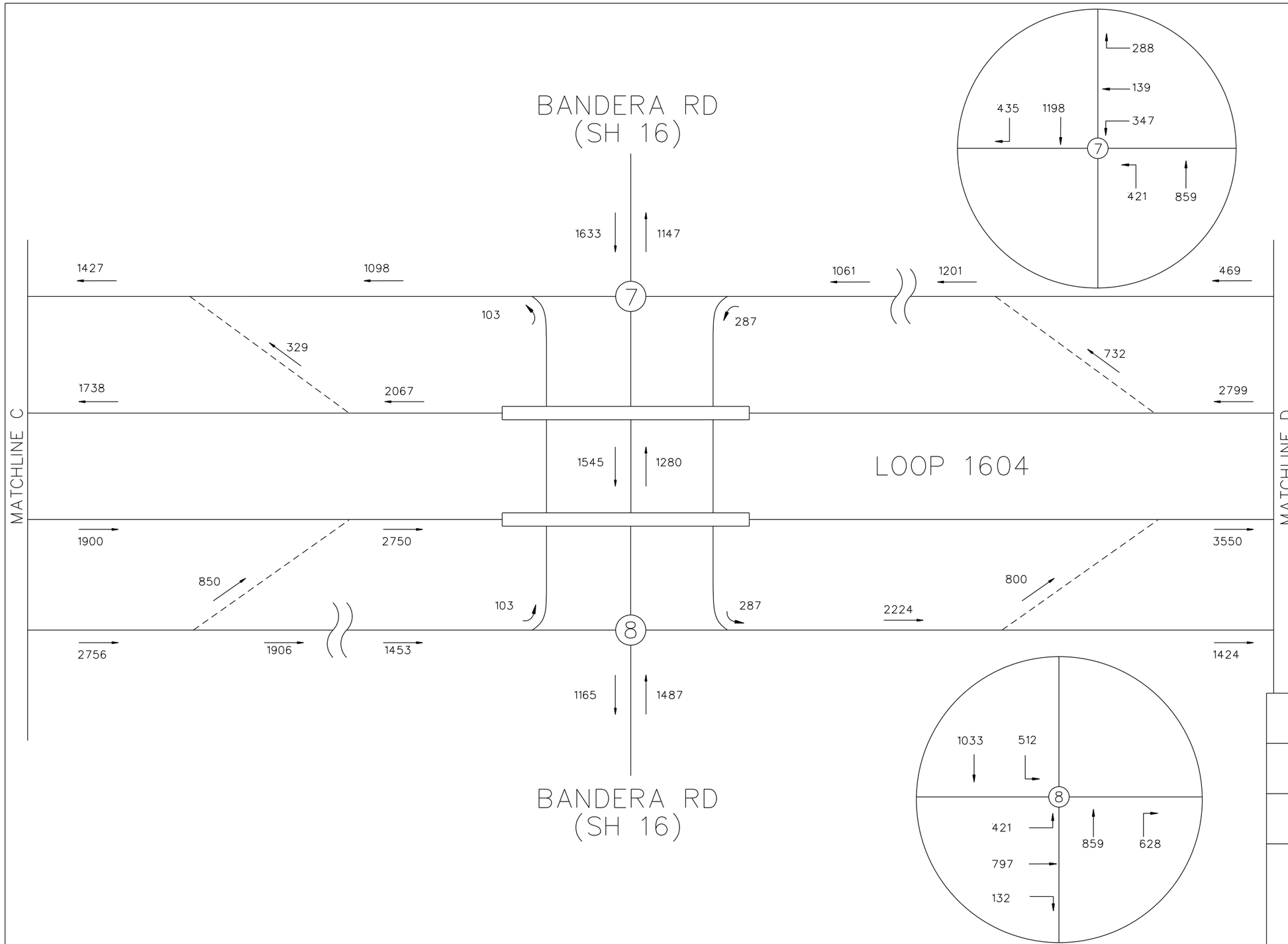

N.T.S.

LEGEND

→ = TRAVEL DIRECTION

XXXXX = YEAR 2018 AM PEAK TRAFFIC

INTERIM REVIEW

THIS DOCUMENT IS RELEASED FOR THE PURPOSE OF INTERIM REVIEW UNDER THE AUTHORITY OF

ANDREW J. BALLARD, PE 59027 JAN. 31, 2019

IT IS NOT TO BE USED FOR CONSTRUCTION PURPOSES.

© 2018

Texas Department of Transportation

TEDSI INFRASTRUCTURE GROUP
Consulting Engineers
1201 E. Expressway 83
Mission, Texas 78572
(956) 424-7898
TBPE F-1640

JACOBS
JACOBS ENGINEERING GROUP INC. FIRM #2966

LOOP 1604
EXISTING AM PEAK TRAFFIC

SHEET 4 OF 34

DESIGN CK	FED.RD. DIV.NO.			HIGHWAY NO.
CHECK PK				LOOP 1604
	STATE	DISTRICT	COUNTY	SHEET NO.
GRAPHICS CC	TX	SAN ANTONIO	BEXAR	4
CHECK PK	CONTROL	SECTION	JOB	
	2452	01	068	

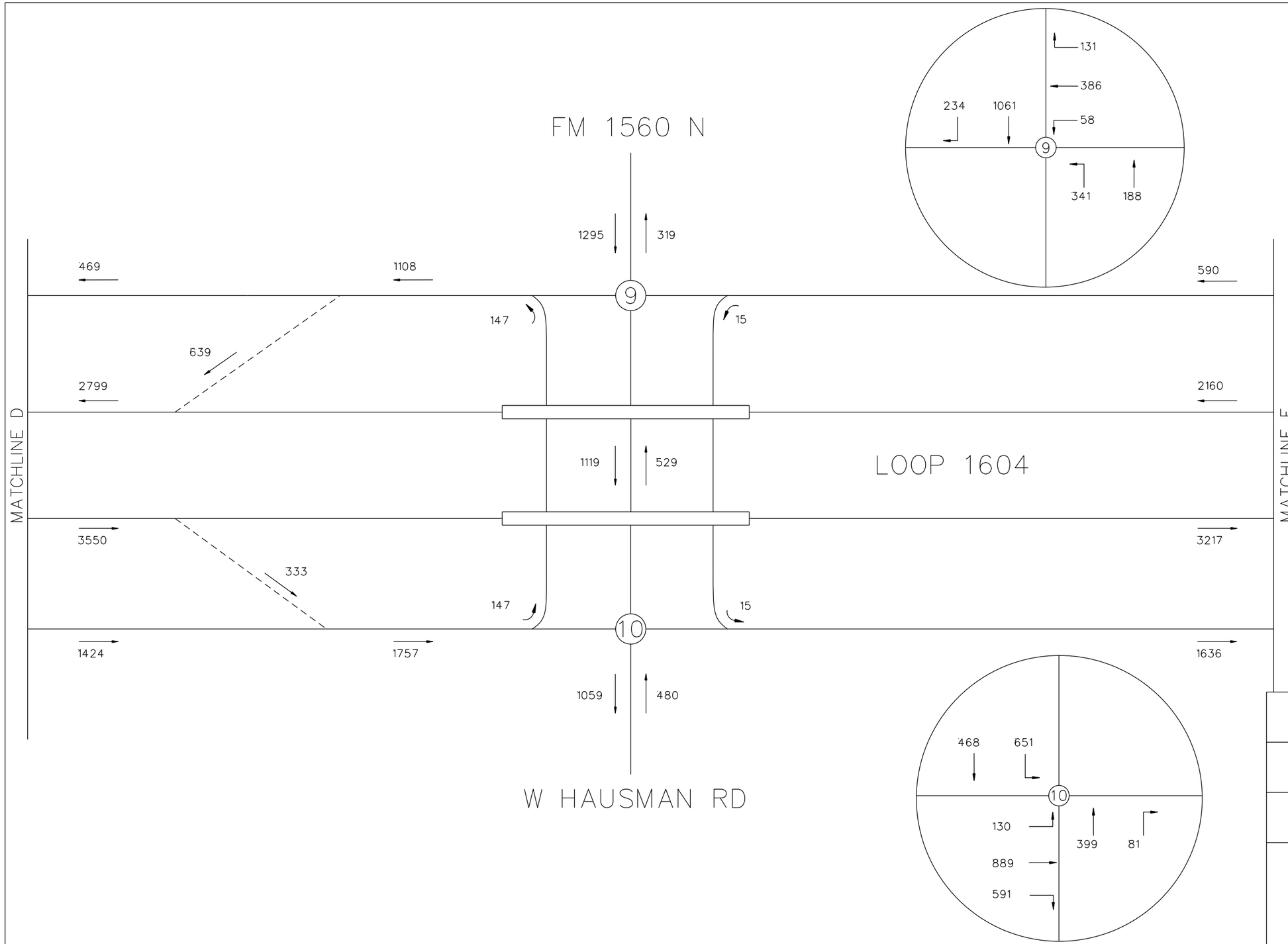

N.T.S.

LEGEND

→ = TRAVEL DIRECTION

XXXXX = YEAR 2018 AM PEAK TRAFFIC

INTERIM REVIEW

THIS DOCUMENT IS RELEASED FOR THE PURPOSE OF INTERIM REVIEW UNDER THE AUTHORITY OF

ANDREW J. BALLARD, PE 59027 JAN. 31, 2019

IT IS NOT TO BE USED FOR CONSTRUCTION PURPOSES.

© 2018

Texas Department of Transportation

TEDSI INFRASTRUCTURE GROUP
Consulting Engineers
TBPE F-1640
1201 E. Expressway 83
Mission, Texas 78572
(956) 424-7898

JACOBS®
JACOBS ENGINEERING GROUP INC. FIRM #2966

LOOP 1604
EXISTING AM PEAK TRAFFIC

SHEET 5 OF 34

DESIGN CK	FED.RD. DIV.NO.			HIGHWAY NO.
				LOOP 1604
CHECK PK	STATE	DISTRICT	COUNTY	SHEET NO.
GRAPHICS CC	TX	SAN ANTONIO	BEXAR	5
	CONTROL	SECTION	JOB	
CHECK PK	2452	01	068	

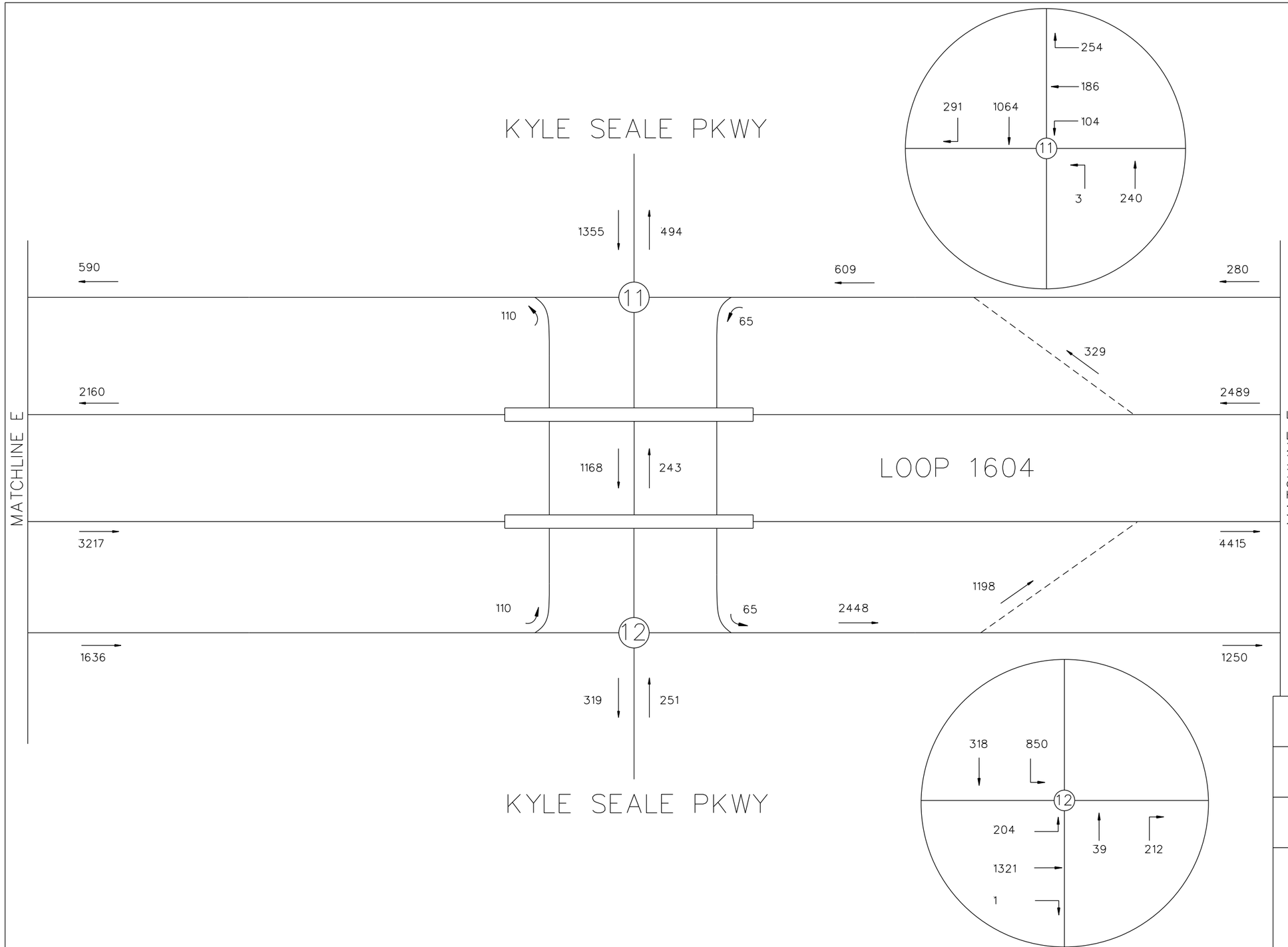

N.T.S.

LEGEND

→ = TRAVEL DIRECTION

XXXXX = YEAR 2018 AM PEAK TRAFFIC

INTERIM REVIEW

THIS DOCUMENT IS RELEASED FOR THE PURPOSE OF INTERIM REVIEW UNDER THE AUTHORITY OF

ANDREW J. BALLARD, PE 59027 JAN. 31, 2019

IT IS NOT TO BE USED FOR CONSTRUCTION PURPOSES.

© 2018

Texas Department of Transportation

TEDSI INFRASTRUCTURE GROUP
Consulting Engineers
TBPE F-1640
1201 E. Expressway 83
Mission, Texas 78572
(956) 424-7898

JACOBS
JACOBS ENGINEERING GROUP INC. FIRM #2966

LOOP 1604
EXISTING AM PEAK TRAFFIC

SHEET 6 OF 34

DESIGN CK	FED.RD. DIV.NO.			HIGHWAY NO.
				LOOP 1604
CHECK PK	STATE	DISTRICT	COUNTY	SHEET NO.
GRAPHICS CC	TX	SAN ANTONIO	BEXAR	6
	CONTROL	SECTION	JOB	
CHECK PK	2452	01	068	

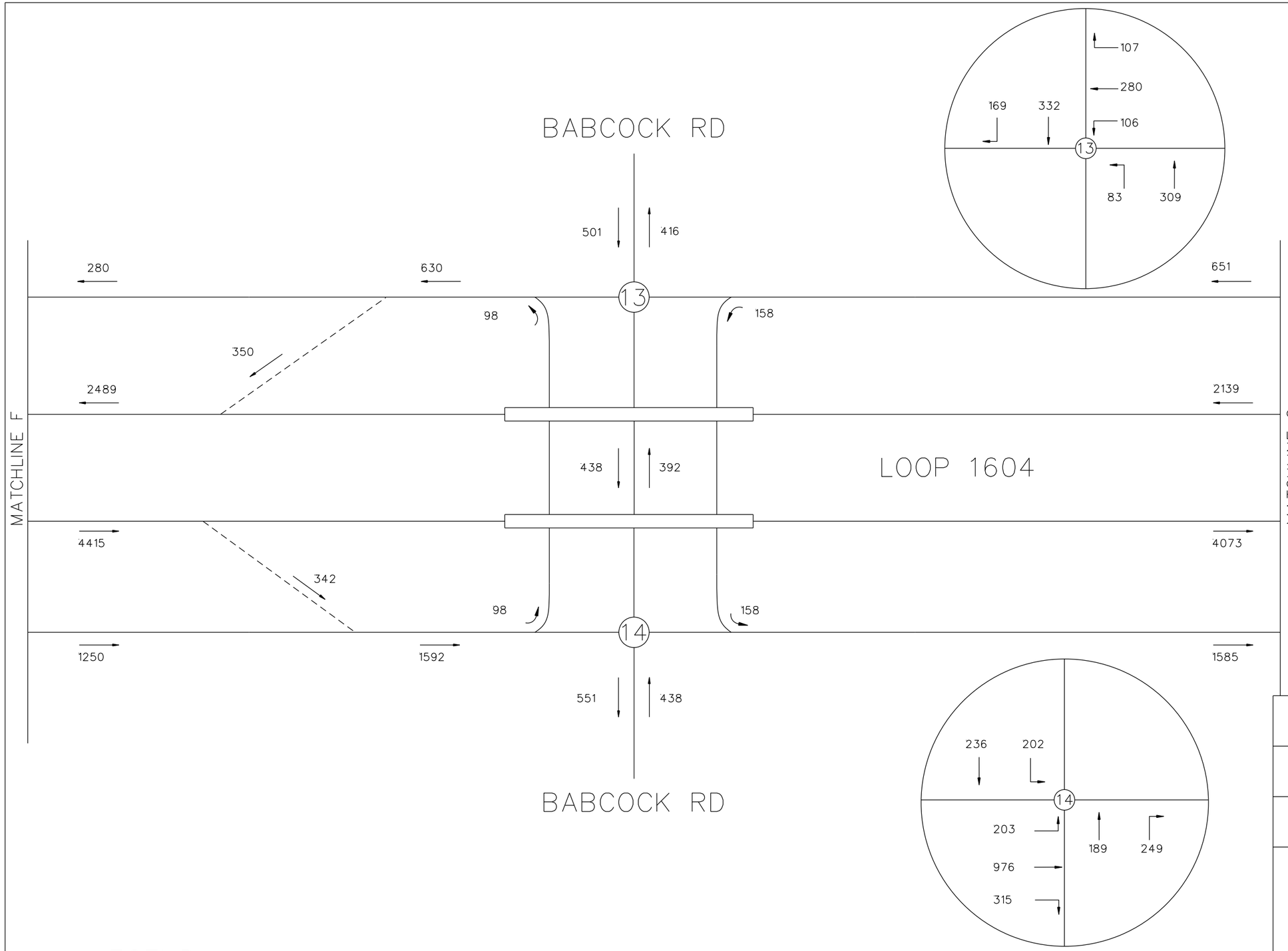

N.T.S.

LEGEND

→ = TRAVEL DIRECTION

XXXXX = YEAR 2018 AM PEAK TRAFFIC

INTERIM REVIEW

THIS DOCUMENT IS RELEASED FOR THE PURPOSE OF INTERIM REVIEW UNDER THE AUTHORITY OF ANDREW J. BALLARD, PE 59027 JAN. 31, 2019
IT IS NOT TO BE USED FOR CONSTRUCTION PURPOSES.

© 2018

Texas Department of Transportation

TEDSI INFRASTRUCTURE GROUP
Consulting Engineers
TBPE F-1640
1201 E. Expressway 83
Mission, Texas 78572
(956) 424-7898

JACOBS®
JACOBS ENGINEERING GROUP INC. FIRM #2966

LOOP 1604
EXISTING AM PEAK TRAFFIC

SHEET 7 OF 34

DESIGN CK	FED.RD. DIV.NO.			HIGHWAY NO.
				LOOP 1604
CHECK PK	STATE	DISTRICT	COUNTY	SHEET NO.
GRAPHICS CC	TX	SAN ANTONIO	BEXAR	7
	CONTROL	SECTION	JOB	
CHECK PK	2452	01	068	

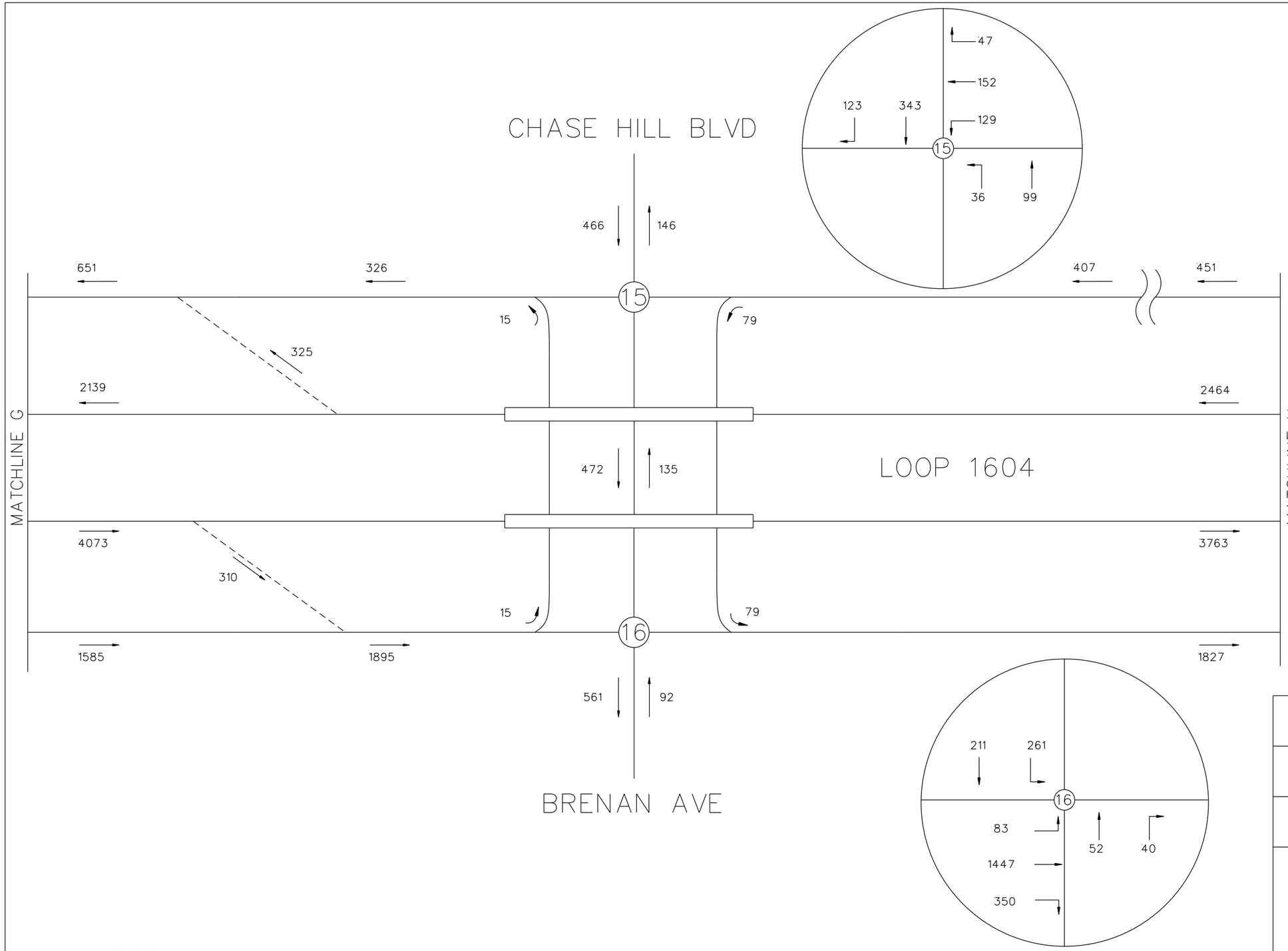

N.T.S.

LEGEND

→ = TRAVEL DIRECTION

XXXXX = YEAR 2018 AM PEAK TRAFFIC

INTERIM REVIEW

THIS DOCUMENT IS RELEASED FOR THE PURPOSE OF INTERIM REVIEW UNDER THE AUTHORITY OF

ANDREW J. BALLARD, PE 59027 JAN. 31, 2019

IT IS NOT TO BE USED FOR CONSTRUCTION PURPOSES.

© 2018

Texas Department of Transportation

TEDSI INFRASTRUCTURE GROUP
Consulting Engineers
1201 E. Expressway 83
Mission, Texas 78572
(956) 424-7898
TBPE F-1640

JACOBS®
JACOBS ENGINEERING GROUP INC. FIRM #2966

LOOP 1604
EXISTING AM PEAK TRAFFIC

SHEET 8 OF 34

DESIGN CK	FED.RD. DIV.NO.			HIGHWAY NO.
CHECK PK				LOOP 1604
	STATE	DISTRICT	COUNTY	SHEET NO.
GRAPHICS CC	TX	SAN ANTONIO	BEXAR	8
	CONTROL	SECTION	JOB	
CHECK PK	2452	01	068	

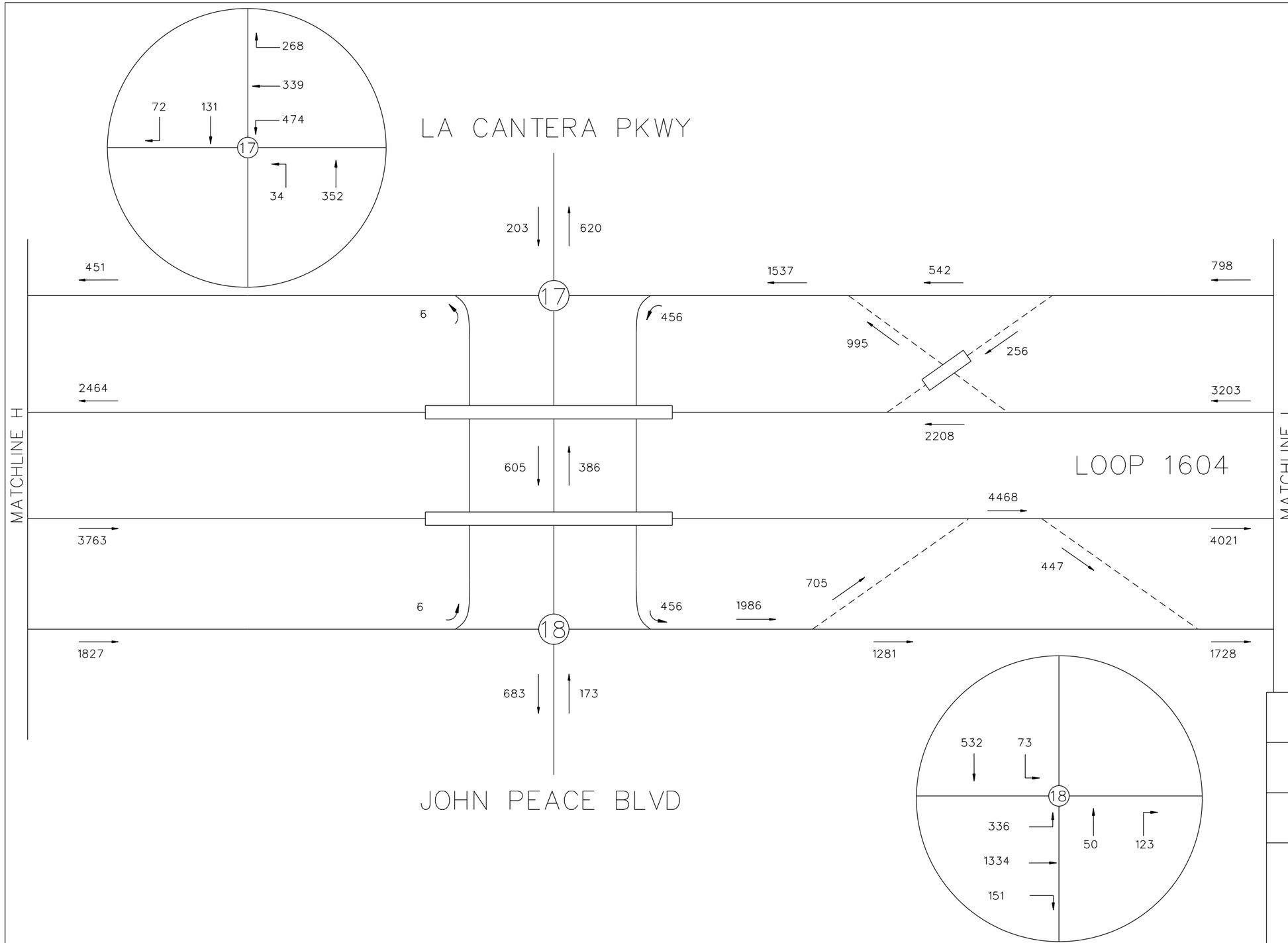

N.T.S.

LEGEND

→ = TRAVEL DIRECTION

XXXXX = YEAR 2018 AM PEAK TRAFFIC

INTERIM REVIEW

THIS DOCUMENT IS RELEASED FOR THE PURPOSE OF INTERIM REVIEW UNDER THE AUTHORITY OF

ANDREW J. BALLARD, PE 59027 JAN. 31, 2019

IT IS NOT TO BE USED FOR CONSTRUCTION PURPOSES.

© 2018

Texas Department of Transportation

TEDSI INFRASTRUCTURE GROUP
Consulting Engineers
1201 E. Expressway 83
Mission, Texas 78572
(956) 424-7898
TBPE F-1640

JACOBS®
JACOBS ENGINEERING GROUP INC. FIRM #2966

LOOP 1604
EXISTING AM PEAK TRAFFIC

SHEET 9 OF 34

DESIGN CK	FED.RD. DIV.NO.			HIGHWAY NO.
CHECK PK				LOOP 1604
	STATE	DISTRICT	COUNTY	SHEET NO.
GRAPHICS CC	TX	SAN ANTONIO	BEXAR	9
CHECK PK	CONTROL	SECTION	JOB	
	2452	01	068	

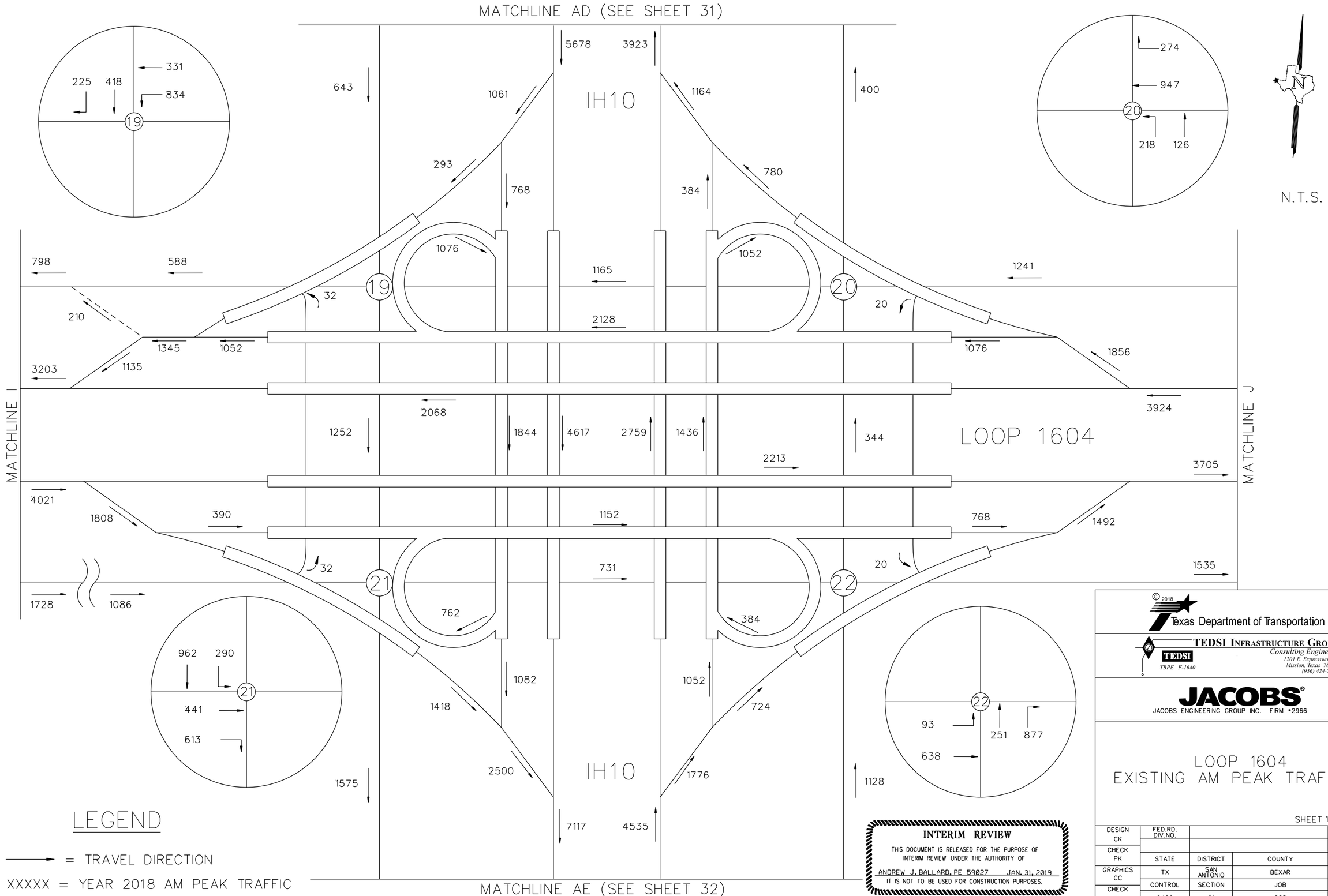
MATCHLINE AD (SEE SHEET 31)
IH10
LOOP 1604
MATCHLINE I
MATCHLINE J
MATCHLINE AE (SEE SHEET 32)
N.T.S.
5678
3923
643
1061
1164
400
293
768
384
780
1076
1052
1165
1241
798
588
32
20
19
20
210
2128
1345
1052
1076
1856
3203
1135
2068
3924
1252
1844
4617
2759
1436
344
2213
3705
4021
1808
390
1152
768
1492
32
20
731
1535
21
22
1728
1086
762
384
962
290
21
441
613
1082
1052
1418
724
22
93
251
877
638
1575
2500
1776
1128
7117
4535
274
947
20
218
126
LEGEND
= TRAVEL DIRECTION
XXXXX = YEAR 2018 AM PEAK TRAFFIC
INTERIM REVIEW
THIS DOCUMENT IS RELEASED FOR THE PURPOSE OF INTERIM REVIEW UNDER THE AUTHORITY OF
ANDREW J. BALLARD, PE 59027 JAN. 31, 2019
IT IS NOT TO BE USED FOR CONSTRUCTION PURPOSES.
© 2018
Texas Department of Transportation
TEDSI INFRASTRUCTURE GROUP
Consulting Engineers
1201 E. Expressway 83
Mission, Texas 78572
(956) 424-7898
TEDSI
TBPE F-1640
JACOBS
JACOBS ENGINEERING GROUP INC. FIRM #2966
LOOP 1604
EXISTING AM PEAK TRAFFIC
SHEET 10 OF 34
DESIGN CK
CHECK PK
GRAPHICS CC
CHECK PK
FED.RD. DIV.NO.
STATE
DISTRICT
COUNTY
TX
SAN ANTONIO
BEXAR
CONTROL
SECTION
JOB
2452
01
068
HIGHWAY NO.
LOOP 1604
SHEET NO.
10

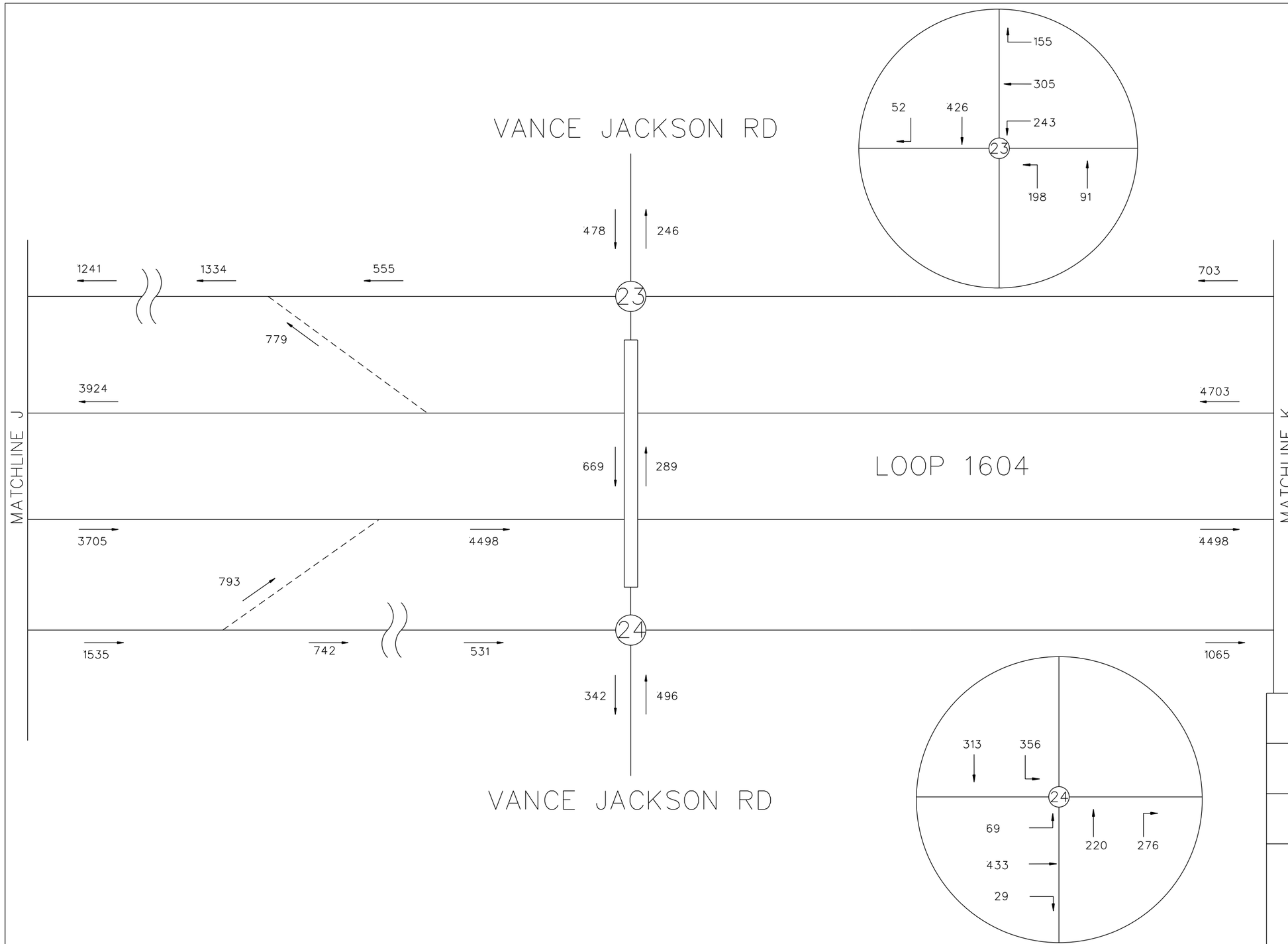

N.T.S.

LEGEND

→ = TRAVEL DIRECTION

XXXXX = YEAR 2018 AM PEAK TRAFFIC

INTERIM REVIEW

THIS DOCUMENT IS RELEASED FOR THE PURPOSE OF INTERIM REVIEW UNDER THE AUTHORITY OF

ANDREW J. BALLARD, PE 59027 JAN. 31, 2019

IT IS NOT TO BE USED FOR CONSTRUCTION PURPOSES.

© 2018

Texas Department of Transportation

TEDSI INFRASTRUCTURE GROUP
Consulting Engineers
1201 E. Expressway 83
Mission, Texas 78572
(956) 424-7898
TBPE F-1640

JACOBS®
JACOBS ENGINEERING GROUP INC. FIRM #2966

LOOP 1604
EXISTING AM PEAK TRAFFIC

SHEET 11 OF 34

DESIGN CK	FED.RD. DIV.NO.			HIGHWAY NO.
CHECK PK				LOOP 1604
	STATE	DISTRICT	COUNTY	SHEET NO.
GRAPHICS CC	TX	SAN ANTONIO	BEXAR	11
CHECK PK	CONTROL	SECTION	JOB	
	2452	01	068	

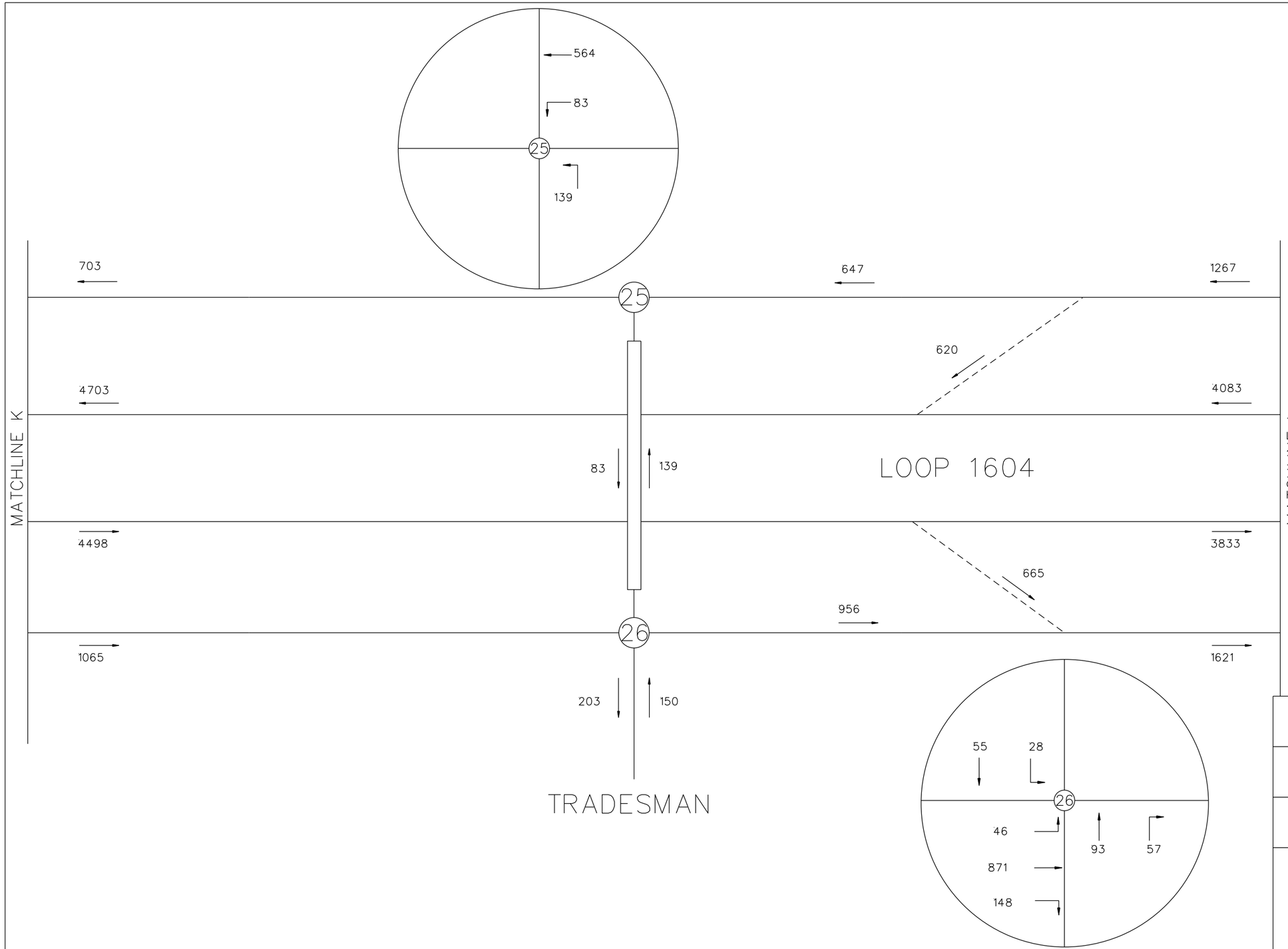

N.T.S.

LEGEND

→ = TRAVEL DIRECTION

XXXXX = YEAR 2018 AM PEAK TRAFFIC

INTERIM REVIEW

THIS DOCUMENT IS RELEASED FOR THE PURPOSE OF INTERIM REVIEW UNDER THE AUTHORITY OF

ANDREW J. BALLARD, PE 59027 JAN. 31, 2019

IT IS NOT TO BE USED FOR CONSTRUCTION PURPOSES.

© 2018

Texas Department of Transportation

TEDSI INFRASTRUCTURE GROUP
Consulting Engineers
1201 E. Expressway 83
Mission, Texas 78572
(956) 424-7898
TBPE F-1640

JACOBS
JACOBS ENGINEERING GROUP INC. FIRM #2966

LOOP 1604
EXISTING AM PEAK TRAFFIC

SHEET 12 OF 34

DESIGN CK	FED.RD. DIV.NO.			HIGHWAY NO.
CHECK PK				LOOP 1604
	STATE	DISTRICT	COUNTY	SHEET NO.
GRAPHICS CC	TX	SAN ANTONIO	BEXAR	12
	CONTROL	SECTION	JOB	
CHECK PK	2452	01	068	

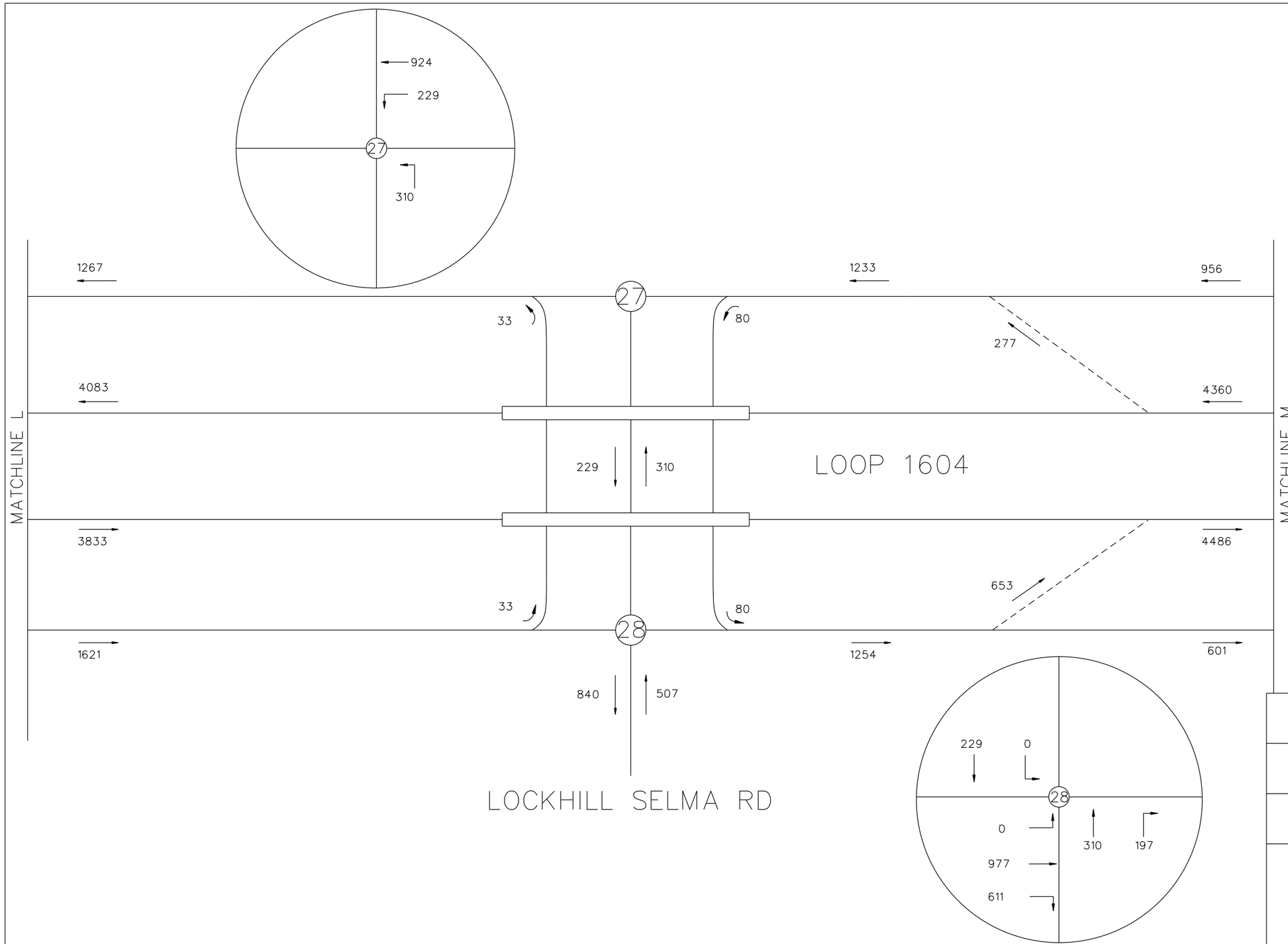

N.T.S.

LEGEND

→ = TRAVEL DIRECTION

XXXXX = YEAR 2018 AM PEAK TRAFFIC

INTERIM REVIEW

THIS DOCUMENT IS RELEASED FOR THE PURPOSE OF INTERIM REVIEW UNDER THE AUTHORITY OF

ANDREW J. BALLARD, PE 59027 JAN. 31, 2019

IT IS NOT TO BE USED FOR CONSTRUCTION PURPOSES.

© 2018

Texas Department of Transportation

TEDSI INFRASTRUCTURE GROUP
Consulting Engineers
1201 E. Expressway 83
Mission, Texas 78572
(956) 424-7898
TBPE F-1640

JACOBS®
JACOBS ENGINEERING GROUP INC. FIRM #2966

LOOP 1604
EXISTING AM PEAK TRAFFIC

SHEET 13 OF 34

DESIGN CK	FED.RD. DIV.NO.			HIGHWAY NO.
CHECK PK				LOOP 1604
	STATE	DISTRICT	COUNTY	SHEET NO.
GRAPHICS CC	TX	SAN ANTONIO	BEXAR	13
CHECK PK	CONTROL	SECTION	JOB	
	2452	01	068	

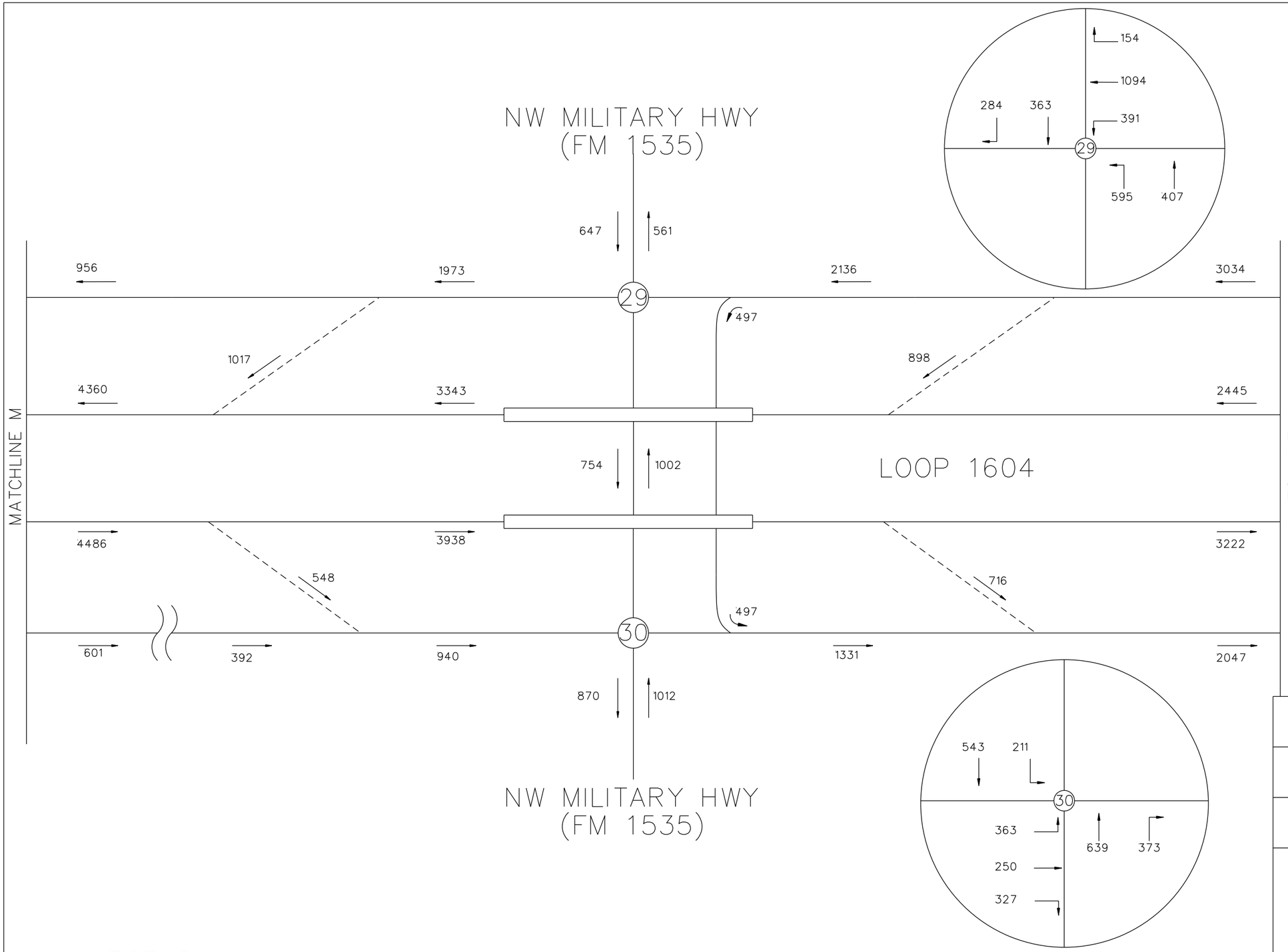

N.T.S.

LEGEND

→ = TRAVEL DIRECTION

XXXXX = YEAR 2018 AM PEAK TRAFFIC

INTERIM REVIEW

THIS DOCUMENT IS RELEASED FOR THE PURPOSE OF INTERIM REVIEW UNDER THE AUTHORITY OF

ANDREW J. BALLARD, PE 59027 JAN. 31, 2019

IT IS NOT TO BE USED FOR CONSTRUCTION PURPOSES.

© 2018

Texas Department of Transportation

TEDSI INFRASTRUCTURE GROUP
Consulting Engineers
1201 E. Expressway 83
Mission, Texas 78572
(956) 424-7898
TBPE F-1640

JACOBS
JACOBS ENGINEERING GROUP INC. FIRM #2966

LOOP 1604
EXISTING AM PEAK TRAFFIC

SHEET 14 OF 34

DESIGN CK	FED.RD. DIV.NO.			HIGHWAY NO.
CHECK PK				LOOP 1604
	STATE	DISTRICT	COUNTY	SHEET NO.
GRAPHICS CC	TX	SAN ANTONIO	BEXAR	14
	CONTROL	SECTION	JOB	
CHECK PK	2452	01	068	

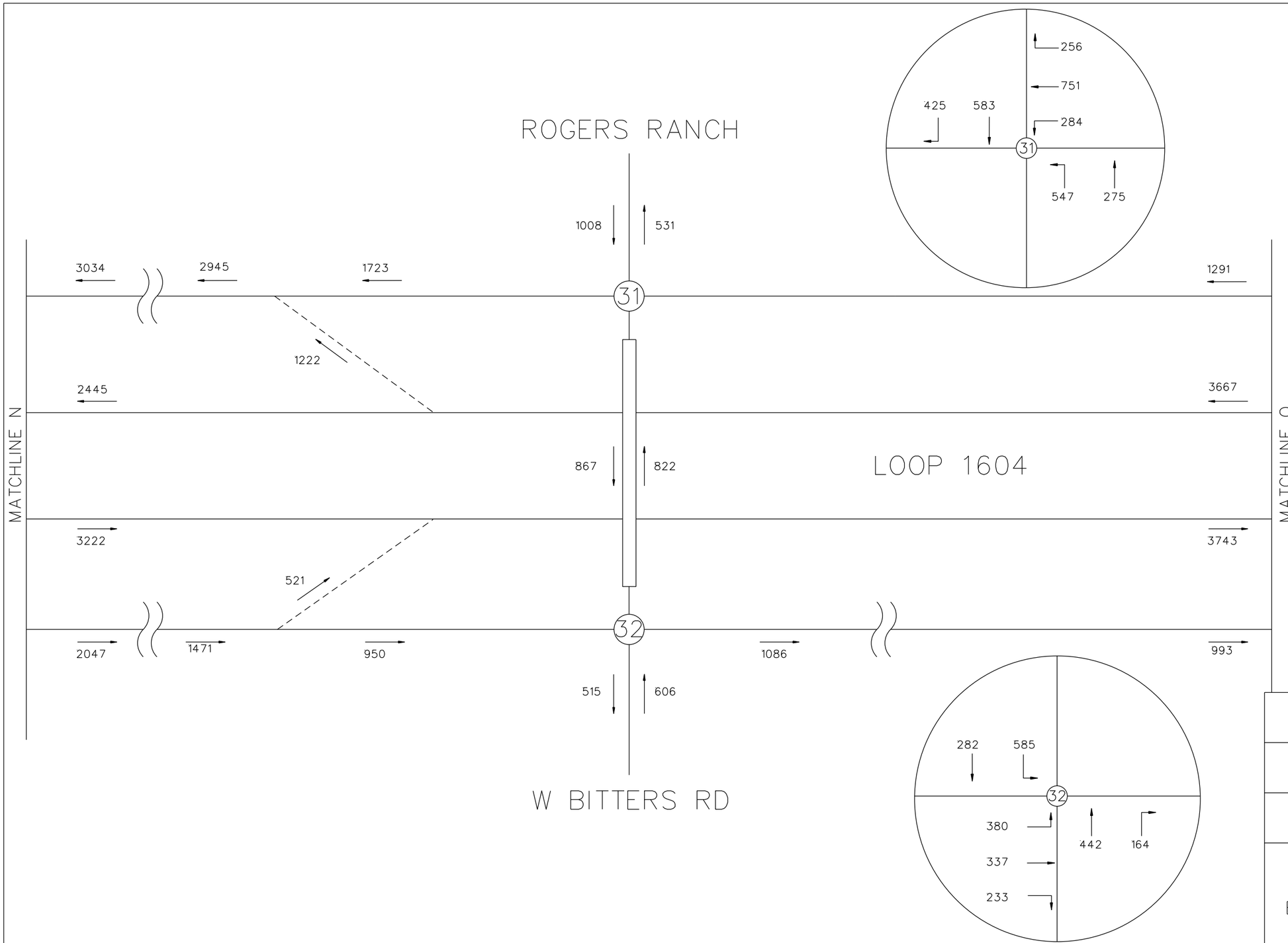

N.T.S.

LEGEND

→ = TRAVEL DIRECTION

XXXXX = YEAR 2018 AM PEAK TRAFFIC

INTERIM REVIEW

THIS DOCUMENT IS RELEASED FOR THE PURPOSE OF INTERIM REVIEW UNDER THE AUTHORITY OF

ANDREW J. BALLARD, PE 59027 JAN. 31, 2019

IT IS NOT TO BE USED FOR CONSTRUCTION PURPOSES.

© 2018

Texas Department of Transportation

TEDSI INFRASTRUCTURE GROUP
Consulting Engineers
1201 E. Expressway 83
Mission, Texas 78572
(956) 424-7898
TBPE F-1640

JACOBS®
JACOBS ENGINEERING GROUP INC. FIRM #2966

LOOP 1604
EXISTING AM PEAK TRAFFIC

SHEET 15 OF 34

DESIGN CK	FED.RD. DIV.NO.			HIGHWAY NO.
CHECK PK				LOOP 1604
	STATE	DISTRICT	COUNTY	SHEET NO.
GRAPHICS CC	TX	SAN ANTONIO	BEXAR	15
CHECK PK	CONTROL	SECTION	JOB	
	2452	01	068	

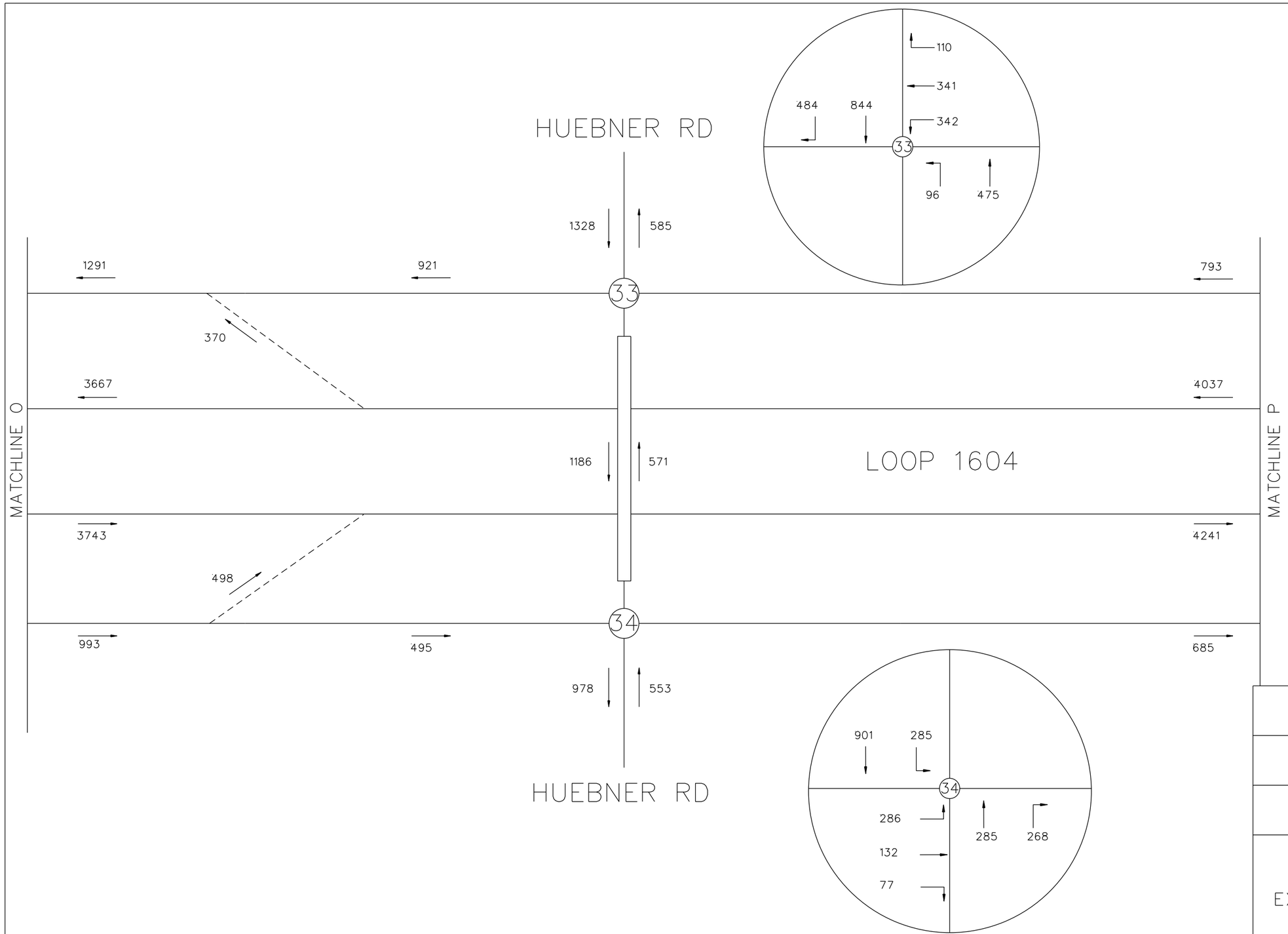

N.T.S.

LEGEND

→ = TRAVEL DIRECTION

XXXXX = YEAR 2018 AM PEAK TRAFFIC

INTERIM REVIEW

THIS DOCUMENT IS RELEASED FOR THE PURPOSE OF INTERIM REVIEW UNDER THE AUTHORITY OF

ANDREW J. BALLARD, PE 59027 JAN. 31, 2019

IT IS NOT TO BE USED FOR CONSTRUCTION PURPOSES.

© 2018

Texas Department of Transportation

TEDSI INFRASTRUCTURE GROUP
Consulting Engineers
1201 E. Expressway 83
Mission, Texas 78572
(956) 424-7898
TBPE F-1640

JACOBS
JACOBS ENGINEERING GROUP INC. FIRM #2966

LOOP 1604
EXISTING AM PEAK TRAFFIC

SHEET 16 OF 34

DESIGN CK	FED.RD. DIV.NO.			HIGHWAY NO.
CHECK PK				LOOP 1604
	STATE	DISTRICT	COUNTY	SHEET NO.
GRAPHICS CC	TX	SAN ANTONIO	BEXAR	16
CHECK PK	CONTROL	SECTION	JOB	
	2452	01	068	

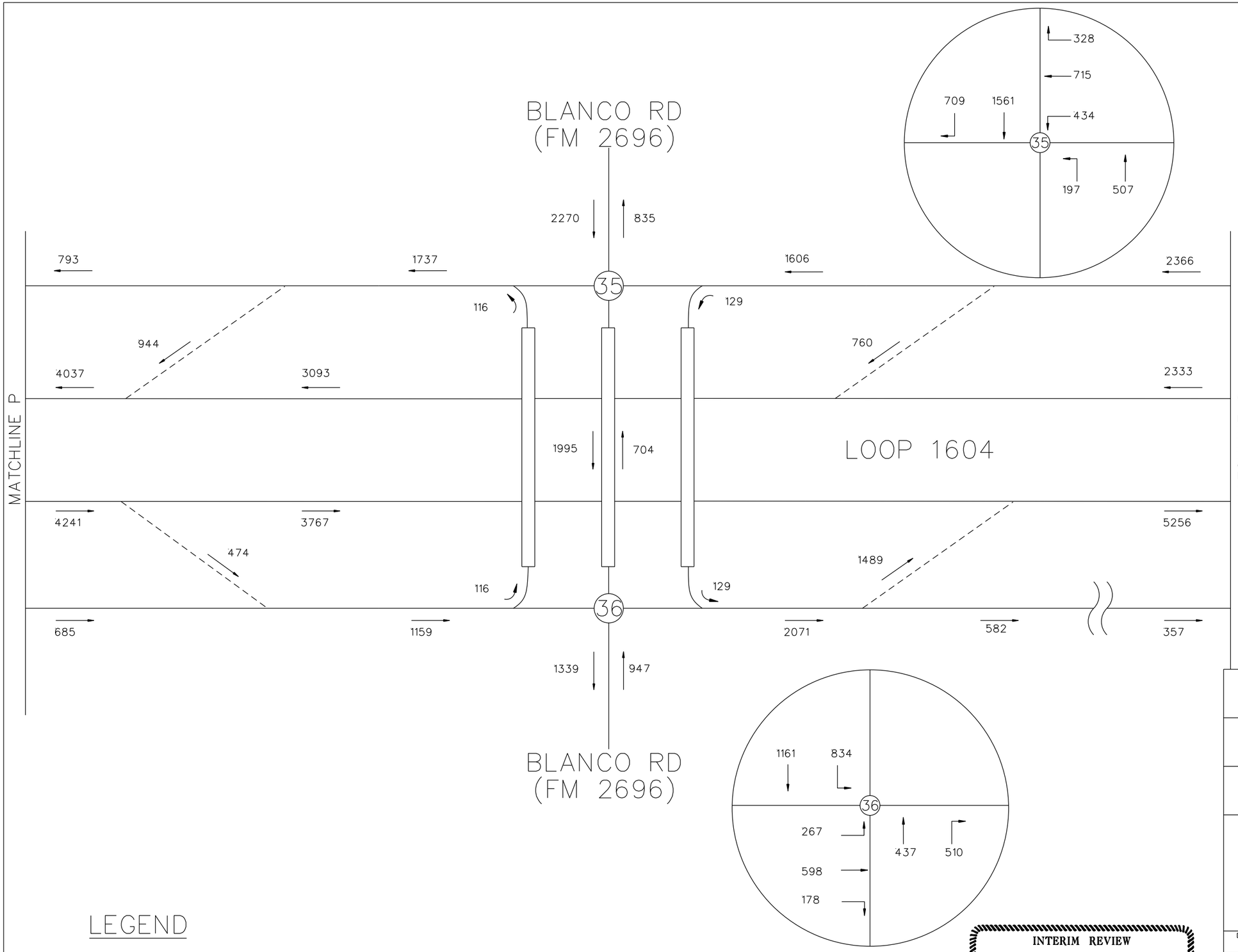

LEGEND

→ = TRAVEL DIRECTION

XXXXX = YEAR 2018 AM PEAK TRAFFIC

INTERIM REVIEW

THIS DOCUMENT IS RELEASED FOR THE PURPOSE OF INTERIM REVIEW UNDER THE AUTHORITY OF

ANDREW J. BALLARD, PE 59027 JAN. 31, 2019

IT IS NOT TO BE USED FOR CONSTRUCTION PURPOSES.

© 2018

Texas Department of Transportation

TEDSI INFRASTRUCTURE GROUP
Consulting Engineers
1201 E. Expressway 83
Mission, Texas 78572
(956) 424-7898
TBPE F-1640

JACOBS
JACOBS ENGINEERING GROUP INC. FIRM #2966

LOOP 1604
EXISTING AM PEAK TRAFFIC

SHEET 17 OF 34

DESIGN CK	FED.RD. DIV.NO.			HIGHWAY NO.
CHECK PK				LOOP 1604
	STATE	DISTRICT	COUNTY	SHEET NO.
GRAPHICS CC	TX	SAN ANTONIO	BEXAR	17
CHECK PK	CONTROL	SECTION	JOB	
	2452	01	068	

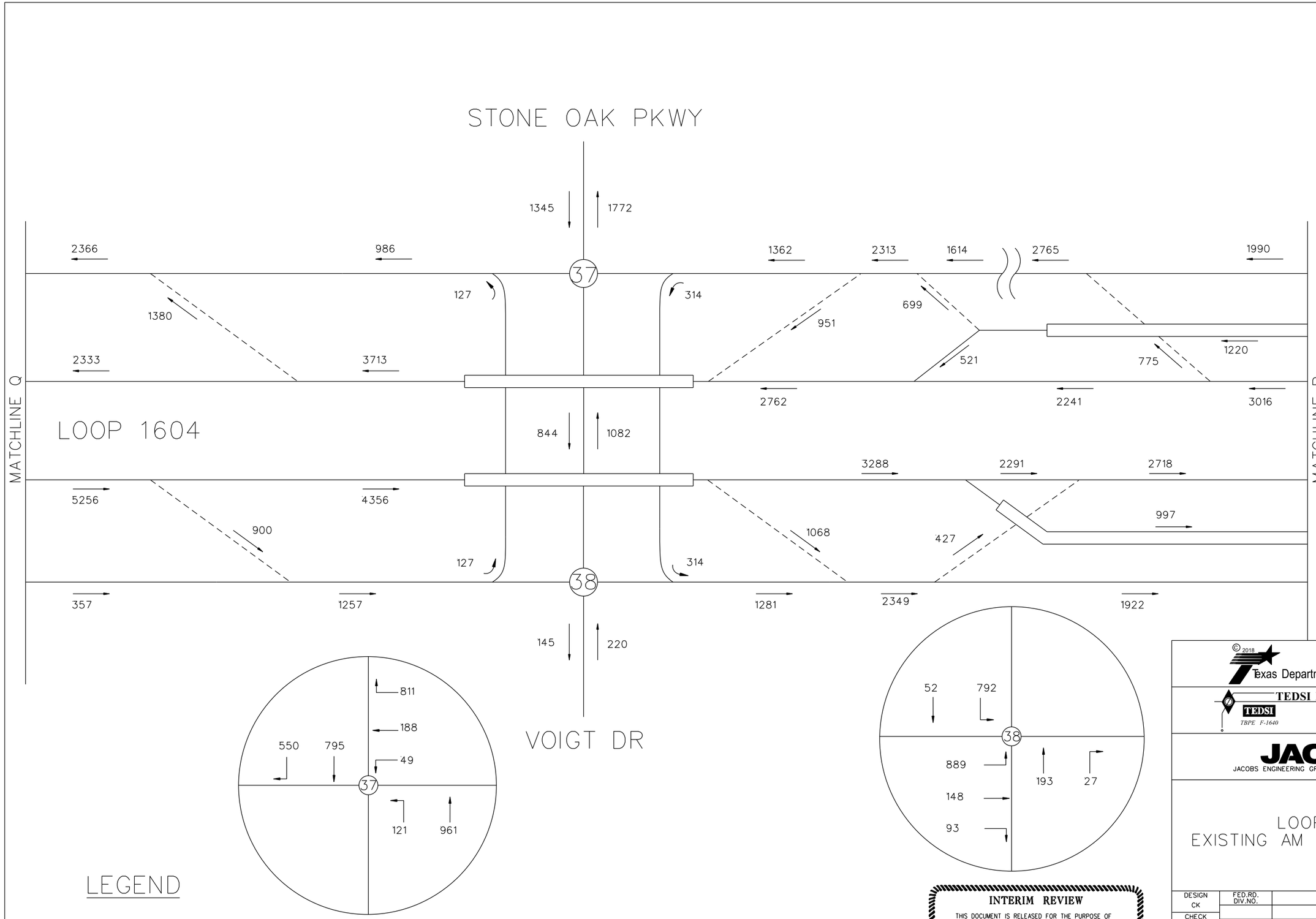

LEGEND

→ = TRAVEL DIRECTION

XXXXX = YEAR 2018 AM PEAK TRAFFIC

INTERIM REVIEW

THIS DOCUMENT IS RELEASED FOR THE PURPOSE OF INTERIM REVIEW UNDER THE AUTHORITY OF

ANDREW J. BALLARD, PE 59027 JAN. 31, 2019

IT IS NOT TO BE USED FOR CONSTRUCTION PURPOSES.

© 2018

Texas Department of Transportation

TEDSI INFRASTRUCTURE GROUP
Consulting Engineers
1201 E. Expressway 83
Mission, Texas 78572
(956) 424-7898
TBPE F-1640

JACOBS
JACOBS ENGINEERING GROUP INC. FIRM #2966

LOOP 1604
EXISTING AM PEAK TRAFFIC

SHEET 18 OF 34

DESIGN CK	FED.RD. DIV.NO.			HIGHWAY NO.
				LOOP 1604
CHECK PK	STATE	DISTRICT	COUNTY	SHEET NO.
GRAPHICS CC	TX	SAN ANTONIO	BEXAR	18
	CONTROL	SECTION	JOB	
CHECK PK	2452	01	068	

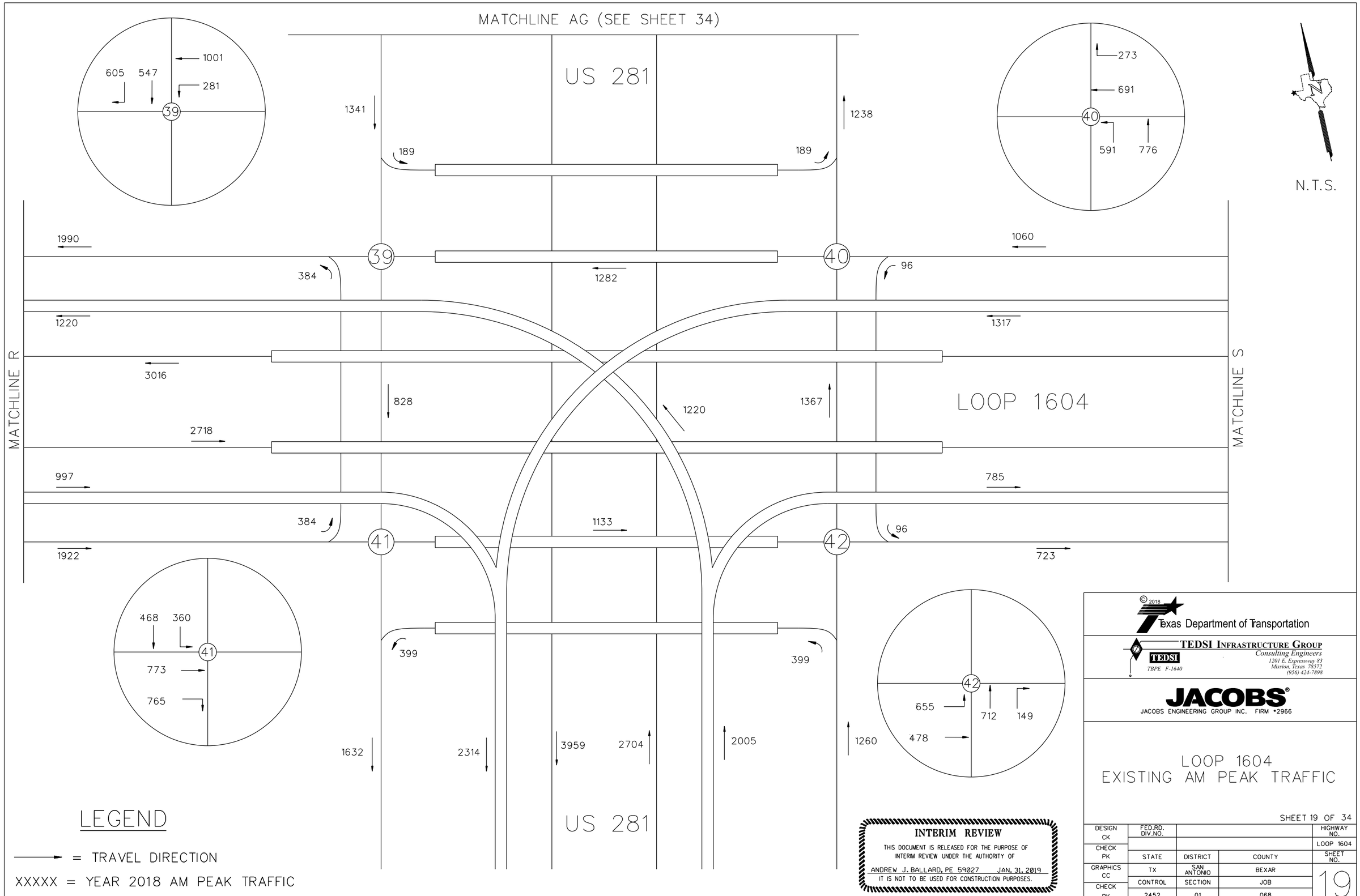

LEGEND

→ = TRAVEL DIRECTION

XXXXX = YEAR 2018 AM PEAK TRAFFIC

INTERIM REVIEW

THIS DOCUMENT IS RELEASED FOR THE PURPOSE OF INTERIM REVIEW UNDER THE AUTHORITY OF

ANDREW J. BALLARD, PE 59027 JAN. 31, 2019

IT IS NOT TO BE USED FOR CONSTRUCTION PURPOSES.

© 2018

Texas Department of Transportation

TEDSI INFRASTRUCTURE GROUP
Consulting Engineers
TBPE F-1640
1201 E. Expressway 83
Mission, Texas 78572
(956) 424-7898

JACOBS
JACOBS ENGINEERING GROUP INC. FIRM #2966

LOOP 1604
EXISTING AM PEAK TRAFFIC

SHEET 19 OF 34

DESIGN CK	FED.RD. DIV.NO.			HIGHWAY NO.
				LOOP 1604
CHECK PK	STATE	DISTRICT	COUNTY	SHEET NO.
GRAPHICS CC	TX	SAN ANTONIO	BEXAR	19
	CONTROL	SECTION	JOB	
CHECK PK	2452	01	068	

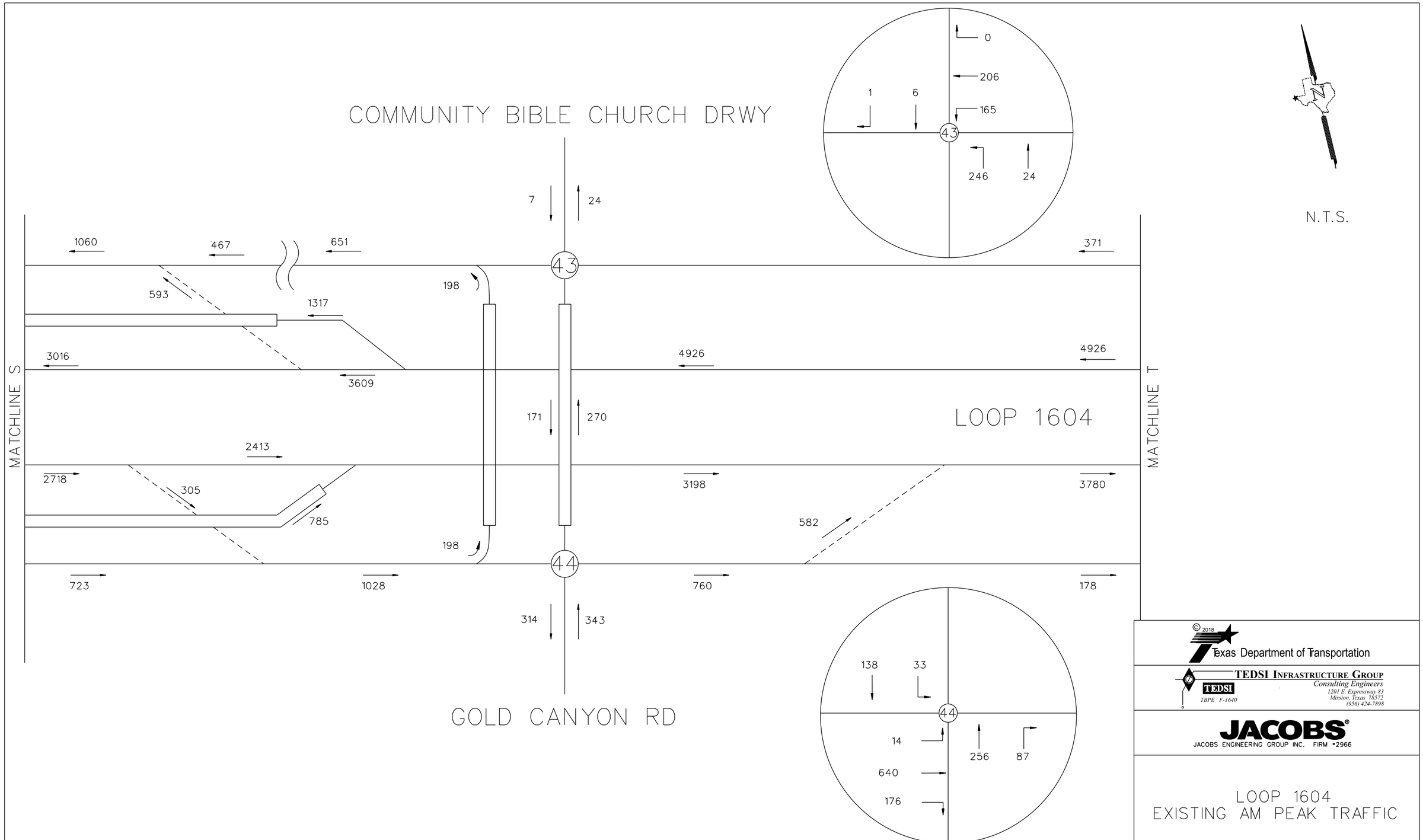

LEGEND

→ = TRAVEL DIRECTION

XXXXX = YEAR 2018 AM PEAK TRAFFIC

INTERIM REVIEW

THIS DOCUMENT IS RELEASED FOR THE PURPOSE OF INTERIM REVIEW UNDER THE AUTHORITY OF

ANDREW J. BALLARD, PE 59027 JAN. 31, 2019

IT IS NOT TO BE USED FOR CONSTRUCTION PURPOSES.

© 2018

Texas Department of Transportation

TEDSI INFRASTRUCTURE GROUP
Consulting Engineers
1201 E. Expressway 83
Mission, Texas 78572
(956) 424-7898
TBPE F-1640

JACOBS
JACOBS ENGINEERING GROUP INC. FIRM #2966

LOOP 1604
EXISTING AM PEAK TRAFFIC

SHEET 20 OF 34

DESIGN CK	FED.RD. DIV.NO.			HIGHWAY NO.
CHECK PK				LOOP 1604
	STATE	DISTRICT	COUNTY	SHEET NO.
GRAPHICS CC	TX	SAN ANTONIO	BEXAR	20
	CONTROL	SECTION	JOB	
CHECK PK	2452	01	068	

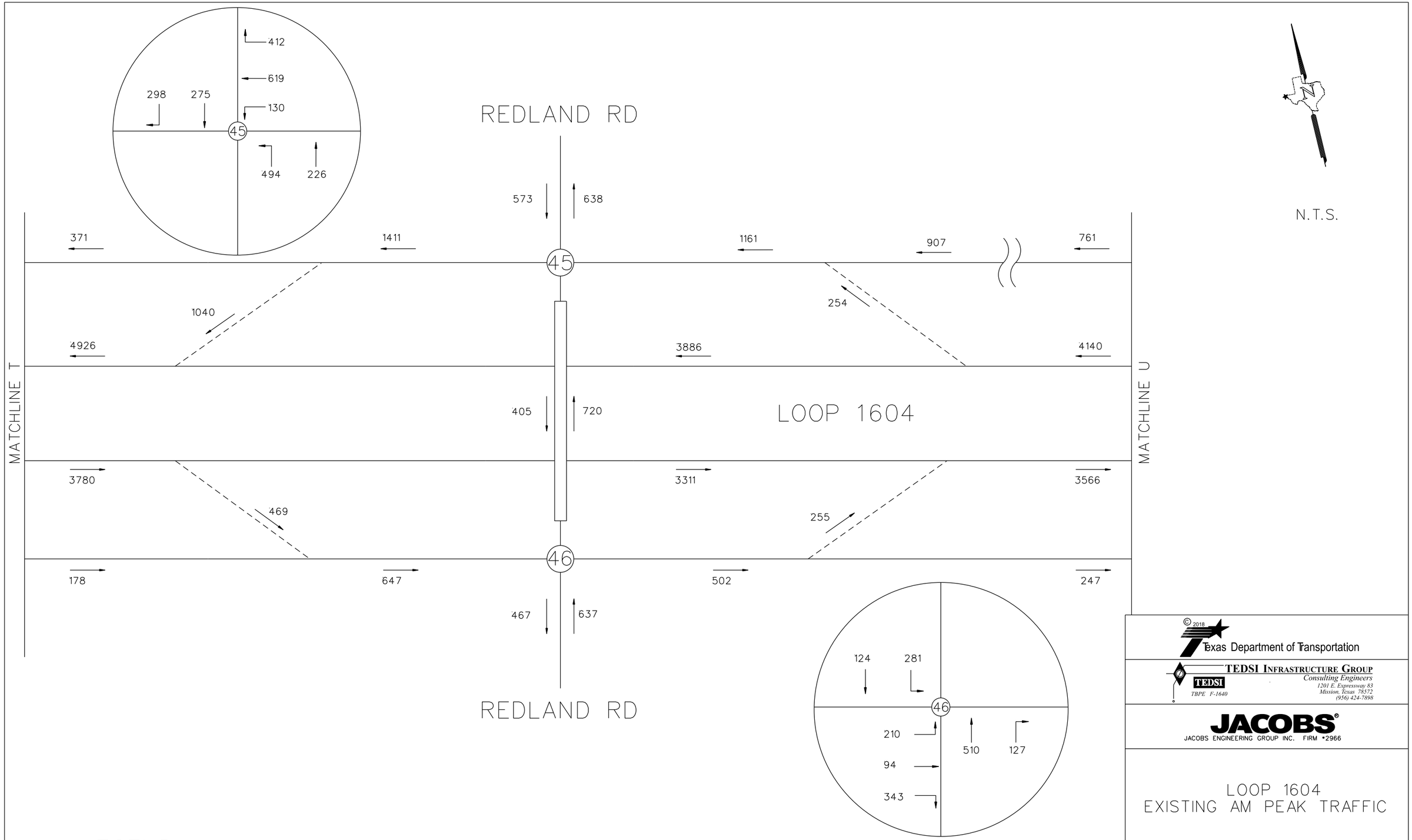

LEGEND

→ = TRAVEL DIRECTION

XXXXX = YEAR 2018 AM PEAK TRAFFIC

INTERIM REVIEW

THIS DOCUMENT IS RELEASED FOR THE PURPOSE OF INTERIM REVIEW UNDER THE AUTHORITY OF

ANDREW J. BALLARD, PE 59027 JAN. 31, 2019

IT IS NOT TO BE USED FOR CONSTRUCTION PURPOSES.

© 2018

Texas Department of Transportation

TEDSI INFRASTRUCTURE GROUP
Consulting Engineers
1201 E. Expressway 83
Mission, Texas 78572
(956) 424-7898
TBPE F-1640

JACOBS
JACOBS ENGINEERING GROUP INC. FIRM #2966

LOOP 1604
EXISTING AM PEAK TRAFFIC

SHEET 21 OF 34

DESIGN CK	FED.RD. DIV.NO.			HIGHWAY NO.
				LOOP 1604
CHECK PK	STATE	DISTRICT	COUNTY	SHEET NO.
GRAPHICS CC	TX	SAN ANTONIO	BEXAR	21
CHECK PK	CONTROL	SECTION	JOB	
	2452	01	068	

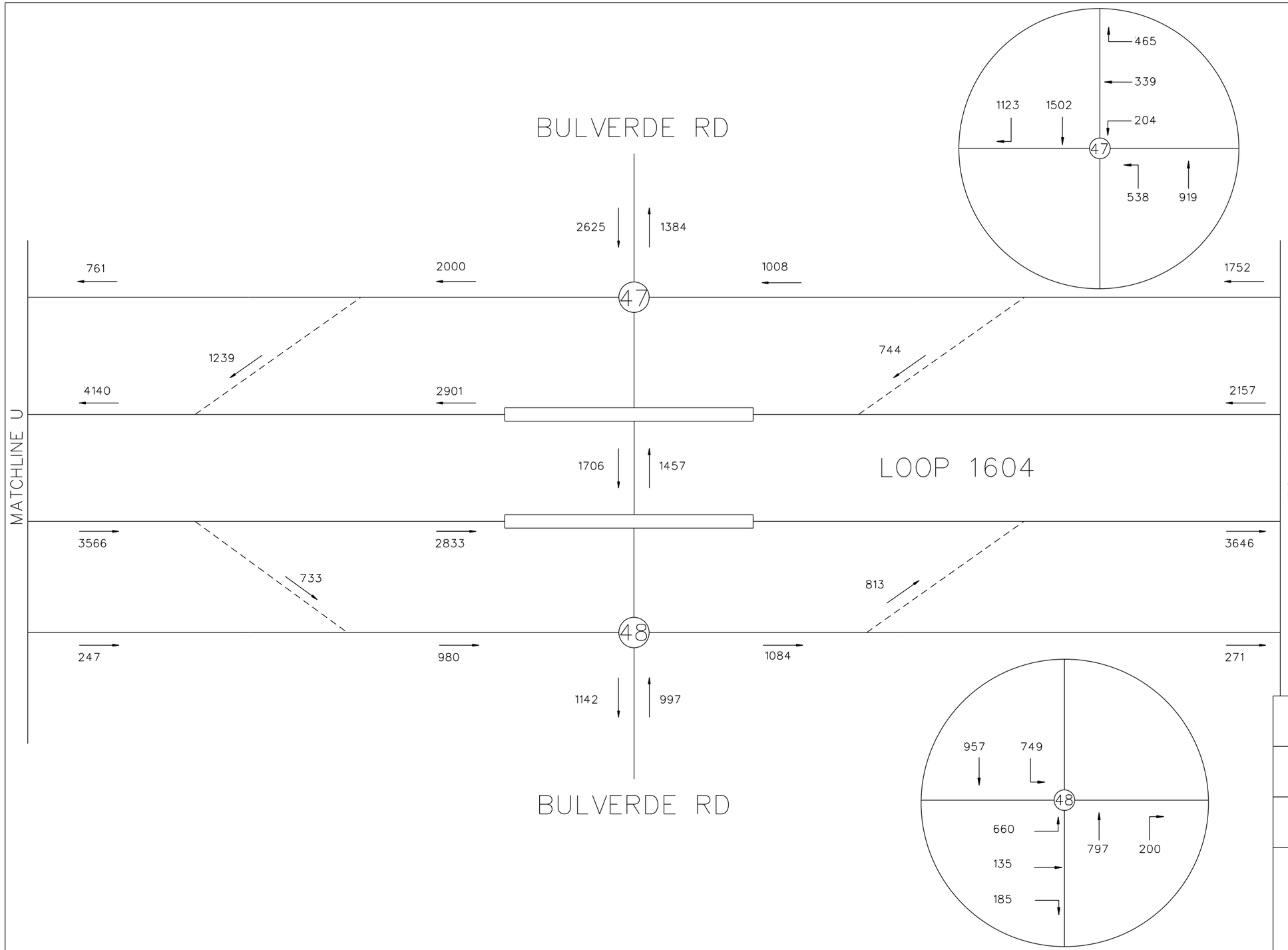

N.T.S.

LEGEND

→ = TRAVEL DIRECTION

XXXXX = YEAR 2018 AM PEAK TRAFFIC

INTERIM REVIEW

THIS DOCUMENT IS RELEASED FOR THE PURPOSE OF INTERIM REVIEW UNDER THE AUTHORITY OF

ANDREW J. BALLARD, PE 59027 JAN. 31, 2019

IT IS NOT TO BE USED FOR CONSTRUCTION PURPOSES.

© 2018

Texas Department of Transportation

TEDSI INFRASTRUCTURE GROUP
Consulting Engineers
1201 E. Expressway 83
Mission, Texas 78572
(956) 424-7898
TBPE F-1640

JACOBS
JACOBS ENGINEERING GROUP INC. FIRM •2966

LOOP 1604
EXISTING AM PEAK TRAFFIC

SHEET 22 OF 34

DESIGN CK	FED.RD. DIV.NO.			HIGHWAY NO.
CHECK PK				LOOP 1604
	STATE	DISTRICT	COUNTY	SHEET NO.
GRAPHICS CC	TX	SAN ANTONIO	BEXAR	22
CHECK PK	CONTROL	SECTION	JOB	
	2452	01	068	

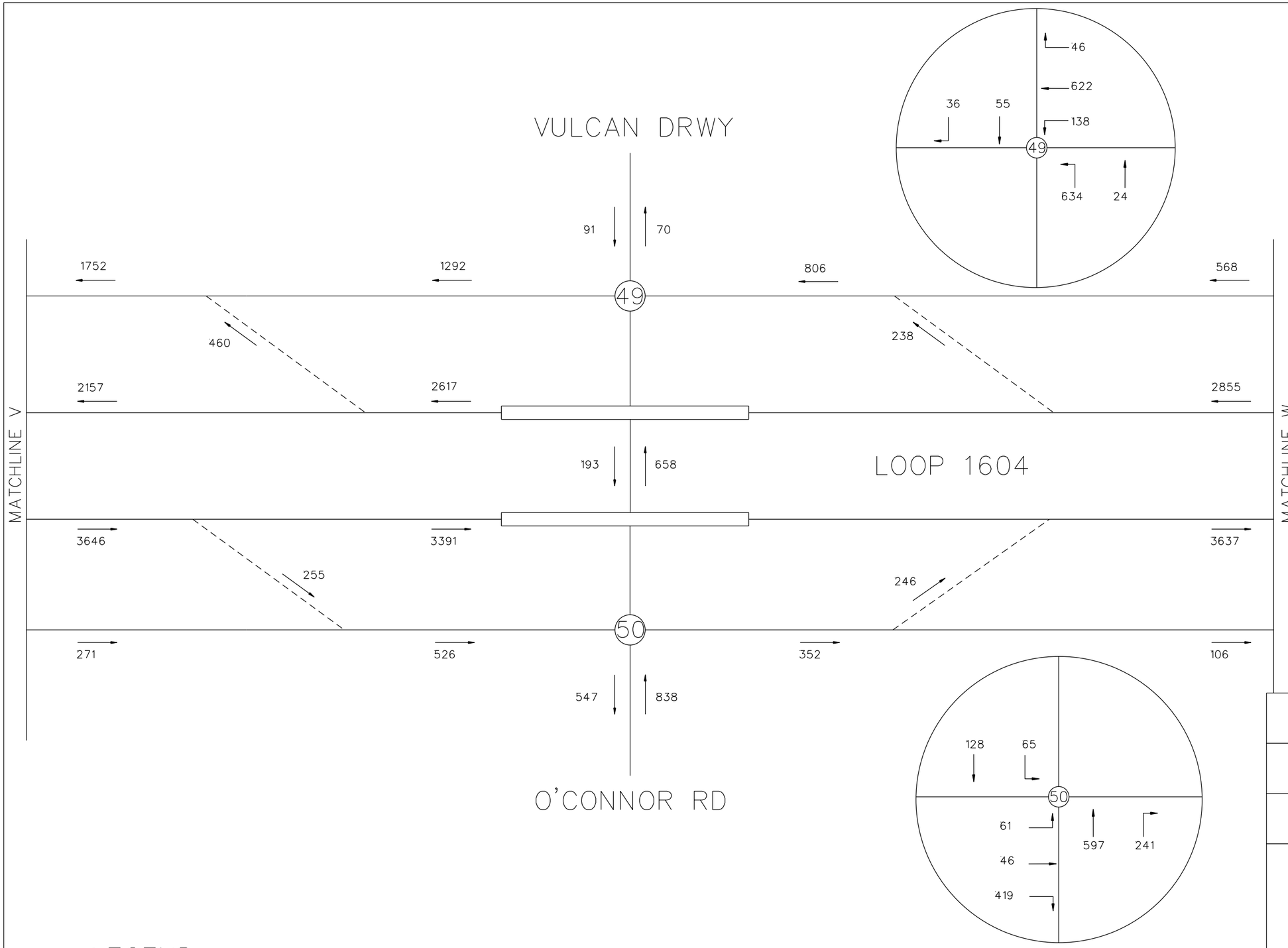

N.T.S.

LEGEND

→ = TRAVEL DIRECTION

XXXXX = YEAR 2018 AM PEAK TRAFFIC

INTERIM REVIEW

THIS DOCUMENT IS RELEASED FOR THE PURPOSE OF INTERIM REVIEW UNDER THE AUTHORITY OF

ANDREW J. BALLARD, PE 59027 JAN. 31, 2019

IT IS NOT TO BE USED FOR CONSTRUCTION PURPOSES.

© 2018

Texas Department of Transportation

TEDSI INFRASTRUCTURE GROUP
Consulting Engineers
1201 E. Expressway 83
Mission, Texas 78572
(956) 424-7898
TBPE F-1640

JACOBS
JACOBS ENGINEERING GROUP INC. FIRM •2966

LOOP 1604
EXISTING AM PEAK TRAFFIC

SHEET 23 OF 34

DESIGN CK	FED.RD. DIV.NO.			HIGHWAY NO.
CHECK PK				LOOP 1604
	STATE	DISTRICT	COUNTY	SHEET NO.
GRAPHICS CC	TX	SAN ANTONIO	BEXAR	23
CHECK PK	CONTROL	SECTION	JOB	
	2452	01	068	

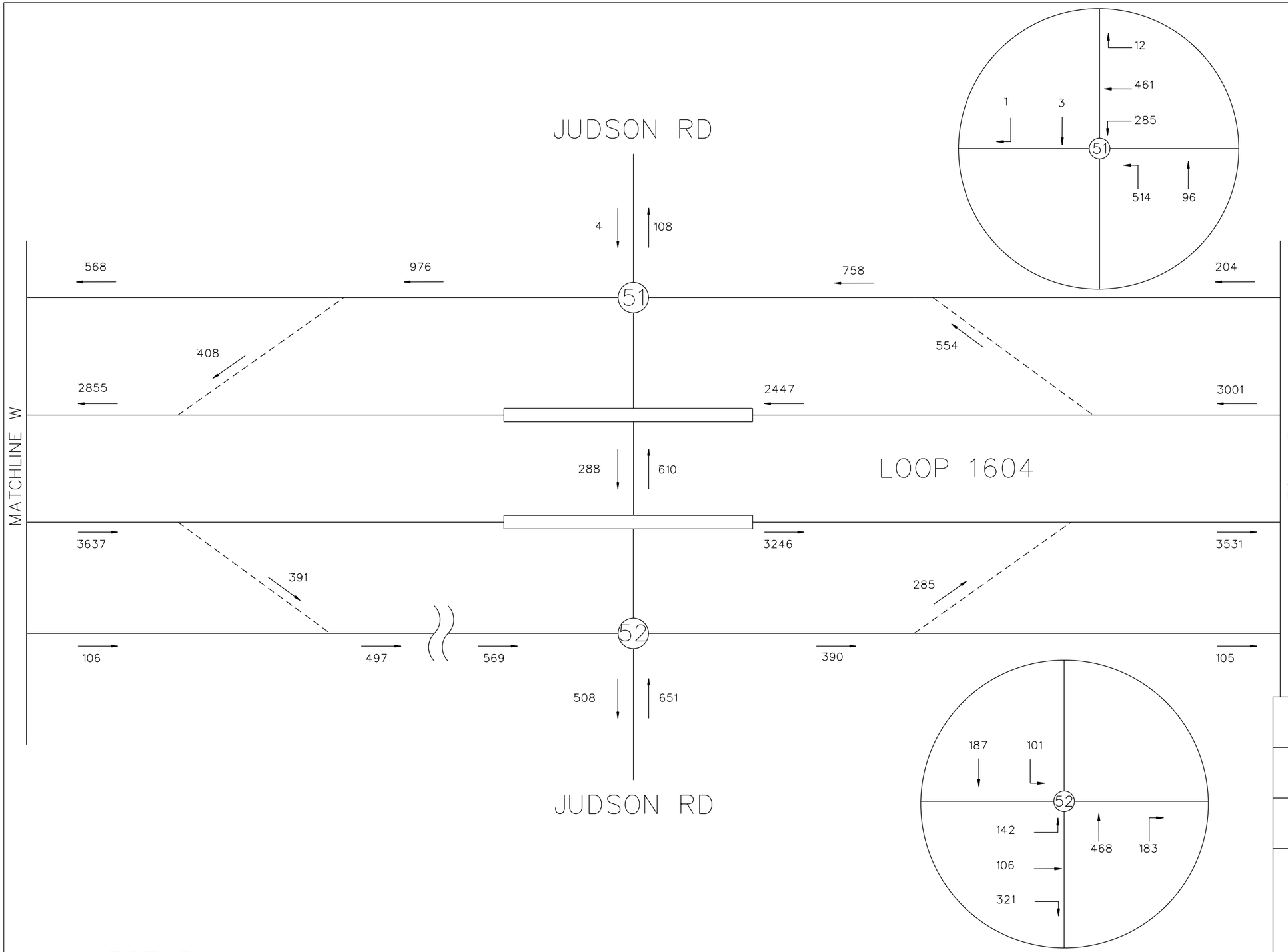

N.T.S.

LEGEND

→ = TRAVEL DIRECTION

XXXXX = YEAR 2018 AM PEAK TRAFFIC

INTERIM REVIEW

THIS DOCUMENT IS RELEASED FOR THE PURPOSE OF INTERIM REVIEW UNDER THE AUTHORITY OF

ANDREW J. BALLARD, PE 59027 JAN. 31, 2019

IT IS NOT TO BE USED FOR CONSTRUCTION PURPOSES.

© 2018

Texas Department of Transportation

TEDSI INFRASTRUCTURE GROUP
Consulting Engineers
1201 E. Expressway 83
Mission, Texas 78572
(956) 424-7898
TBPE F-1640

JACOBS
JACOBS ENGINEERING GROUP INC. FIRM •2966

LOOP 1604
EXISTING AM PEAK TRAFFIC

SHEET 24 OF 34

DESIGN CK	FED.RD. DIV.NO.			HIGHWAY NO.
CHECK PK				LOOP 1604
	STATE	DISTRICT	COUNTY	SHEET NO.
GRAPHICS CC	TX	SAN ANTONIO	BEXAR	24
CHECK PK	CONTROL	SECTION	JOB	
	2452	01	068	

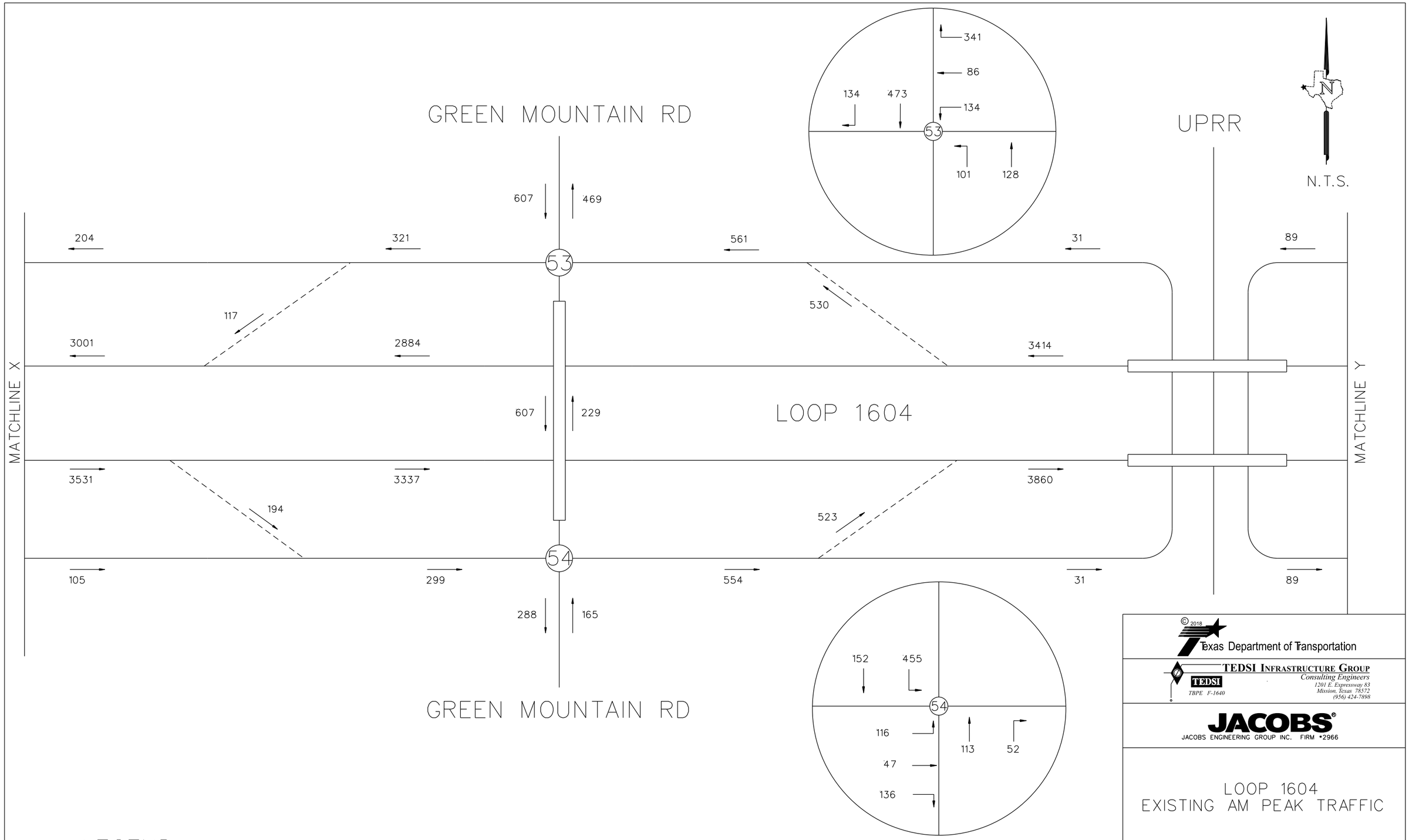

LEGEND

→ = TRAVEL DIRECTION

XXXXX = YEAR 2018 AM PEAK TRAFFIC

INTERIM REVIEW

THIS DOCUMENT IS RELEASED FOR THE PURPOSE OF INTERIM REVIEW UNDER THE AUTHORITY OF

ANDREW J. BALLARD, PE 59027 JAN. 31, 2019

IT IS NOT TO BE USED FOR CONSTRUCTION PURPOSES.

© 2018

Texas Department of Transportation

TEDSI INFRASTRUCTURE GROUP
Consulting Engineers
1201 E. Expressway 83
Mission, Texas 78572
(956) 424-7898
TBPE F-1640

JACOBS
JACOBS ENGINEERING GROUP INC. FIRM •2966

LOOP 1604
EXISTING AM PEAK TRAFFIC

SHEET 25 OF 34

DESIGN CK	FED.RD. DIV.NO.			HIGHWAY NO.
CHECK PK				LOOP 1604
	STATE	DISTRICT	COUNTY	SHEET NO.
GRAPHICS CC	TX	SAN ANTONIO	BEXAR	25
CHECK PK	CONTROL	SECTION	JOB	
	2452	01	068	

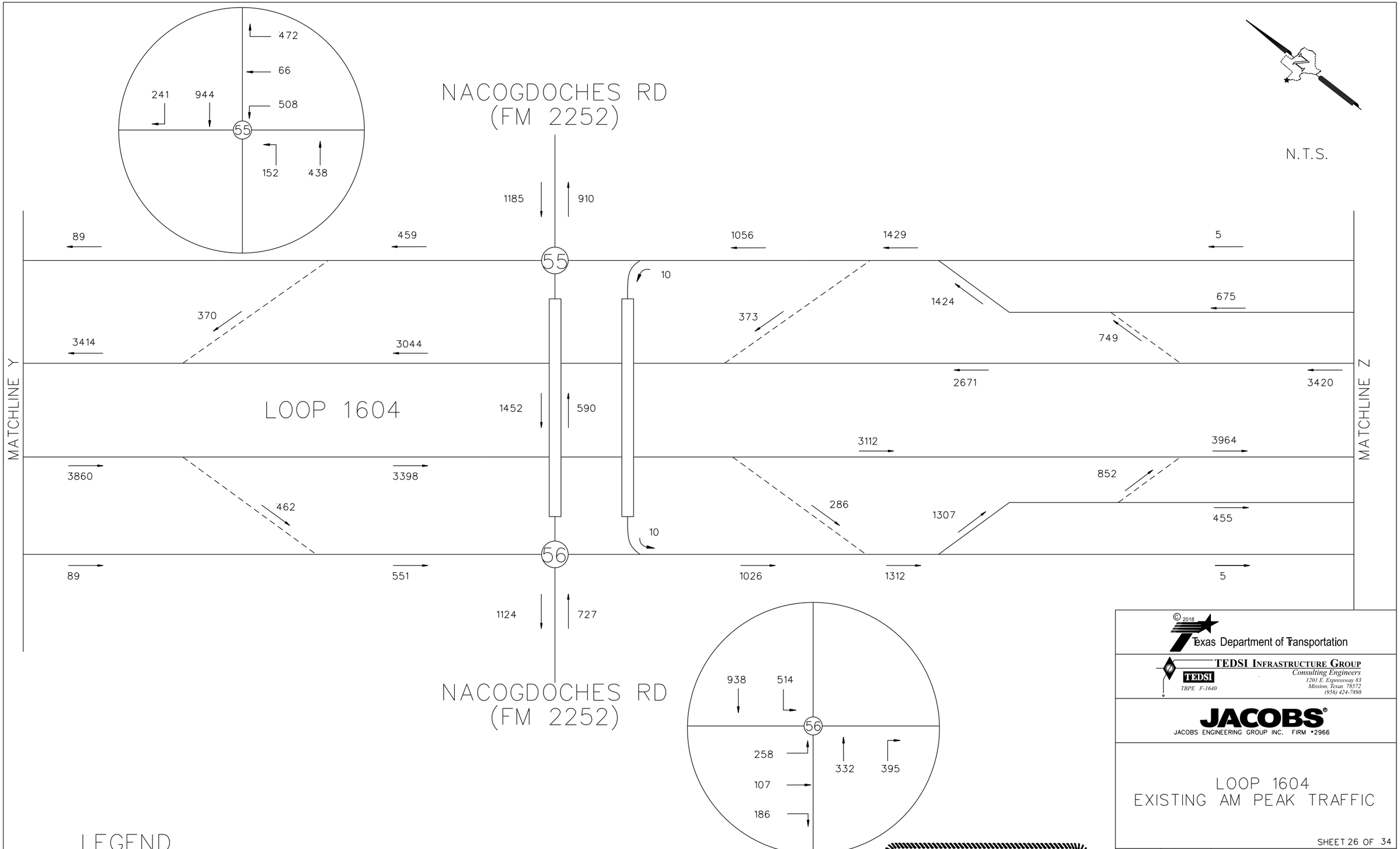

LEGEND

→ = TRAVEL DIRECTION

XXXXX = YEAR 2018 AM PEAK TRAFFIC

INTERIM REVIEW

THIS DOCUMENT IS RELEASED FOR THE PURPOSE OF INTERIM REVIEW UNDER THE AUTHORITY OF

ANDREW J. BALLARD, PE 59027 JAN. 31, 2019

IT IS NOT TO BE USED FOR CONSTRUCTION PURPOSES.

© 2018

Texas Department of Transportation

TEDSI INFRASTRUCTURE GROUP
Consulting Engineers
1201 E. Expressway 83
Mission, Texas 78572
(956) 424-7898
TBPE F-1640

JACOBS®
JACOBS ENGINEERING GROUP INC. FIRM #2966

LOOP 1604
EXISTING AM PEAK TRAFFIC

SHEET 26 OF 34

DESIGN	FED.RD. DIV.NO.			HIGHWAY NO.
CK				LOOP 1604
CHECK	STATE	DISTRICT	COUNTY	SHEET NO.
PK	TX	SAN ANTONIO	BEXAR	26
GRAPHICS	CONTROL	SECTION	JOB	
CC	2452	01	068	
CHECK				
PK				

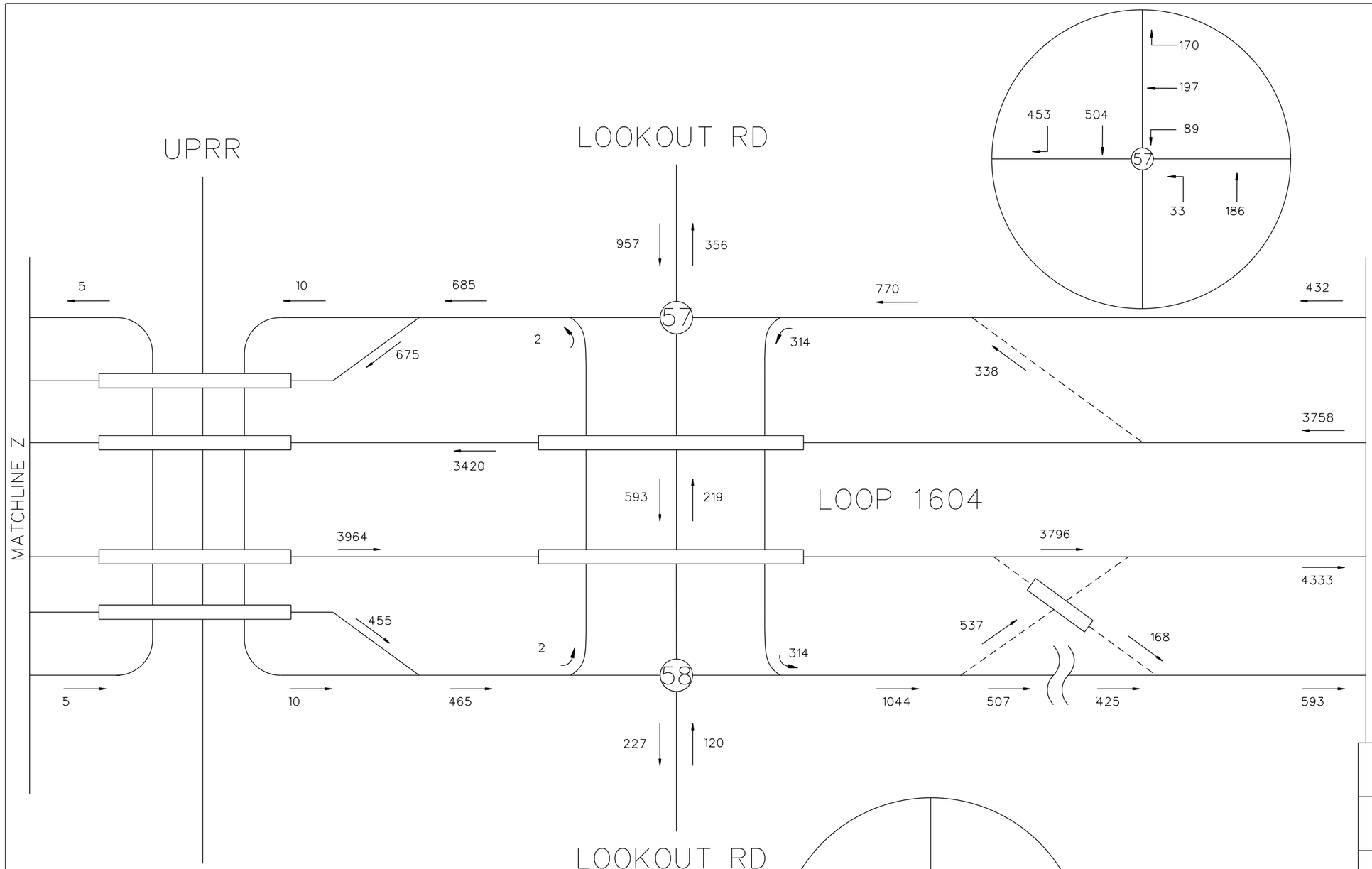

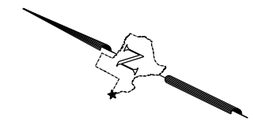

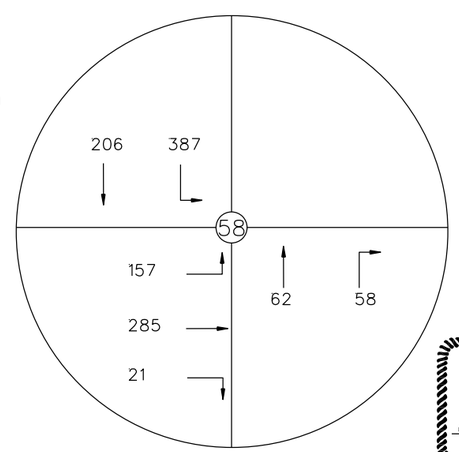

LEGEND

→ = TRAVEL DIRECTION

XXXXX = YEAR 2018 AM PEAK TRAFFIC

INTERIM REVIEW

THIS DOCUMENT IS RELEASED FOR THE PURPOSE OF INTERIM REVIEW UNDER THE AUTHORITY OF ANDREW J. BALLARD, PE 59027 JAN. 31, 2019
IT IS NOT TO BE USED FOR CONSTRUCTION PURPOSES.

© 2018

Texas Department of Transportation

TEDSI INFRASTRUCTURE GROUP
Consulting Engineers
1201 E. Expressway 83
Mission, Texas 78572
(956) 424-7898
TBPE F-1640

JACOBS
JACOBS ENGINEERING GROUP INC. FIRM #2966

LOOP 1604
EXISTING AM PEAK TRAFFIC

SHEET 27 OF 34

DESIGN CK	FED.RD. DIV.NO.			HIGHWAY NO.
CHECK PK				LOOP 1604
	STATE	DISTRICT	COUNTY	SHEET NO.
GRAPHICS CC	TX	SAN ANTONIO	BEXAR	27
CHECK PK	CONTROL	SECTION	JOB	
	2452	01	068	

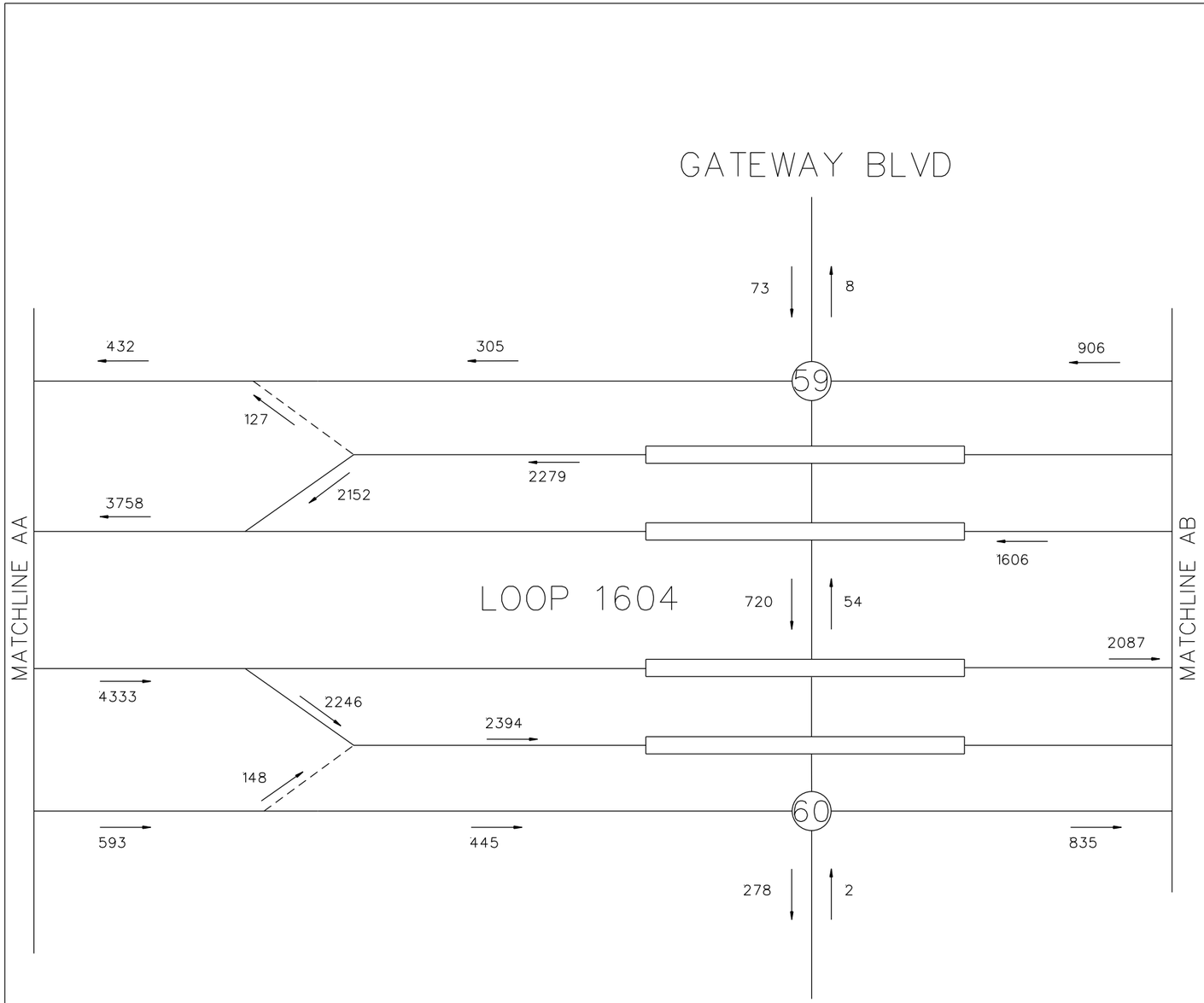

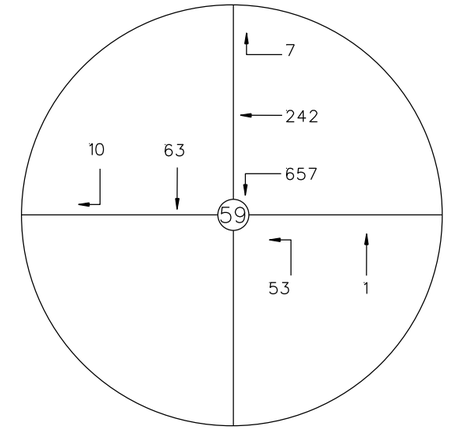

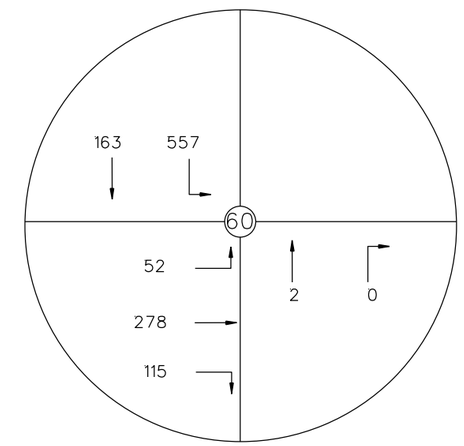

N.T.S.

LEGEND

→ = TRAVEL DIRECTION

XXXXX = YEAR 2018 AM PEAK TRAFFIC

INTERIM REVIEW

THIS DOCUMENT IS RELEASED FOR THE PURPOSE OF INTERIM REVIEW UNDER THE AUTHORITY OF ANDREW J. BALLARD, PE 59027 JAN. 31, 2019
IT IS NOT TO BE USED FOR CONSTRUCTION PURPOSES.

© 2018

Texas Department of Transportation

TEDSI INFRASTRUCTURE GROUP
Consulting Engineers
1201 E. Expressway 83
Mission, Texas 78572
(956) 424-7898
TBPE F-1640

JACOBS
JACOBS ENGINEERING GROUP INC. FIRM #2966

LOOP 1604
EXISTING AM PEAK TRAFFIC

SHEET 28 OF 34

DESIGN CK	FED.RD. DIV.NO.			HIGHWAY NO.
CHECK PK				LOOP 1604
	STATE	DISTRICT	COUNTY	SHEET NO.
GRAPHICS CC	TX	SAN ANTONIO	BEXAR	28
CHECK PK	CONTROL	SECTION	JOB	
	2452	01	068	

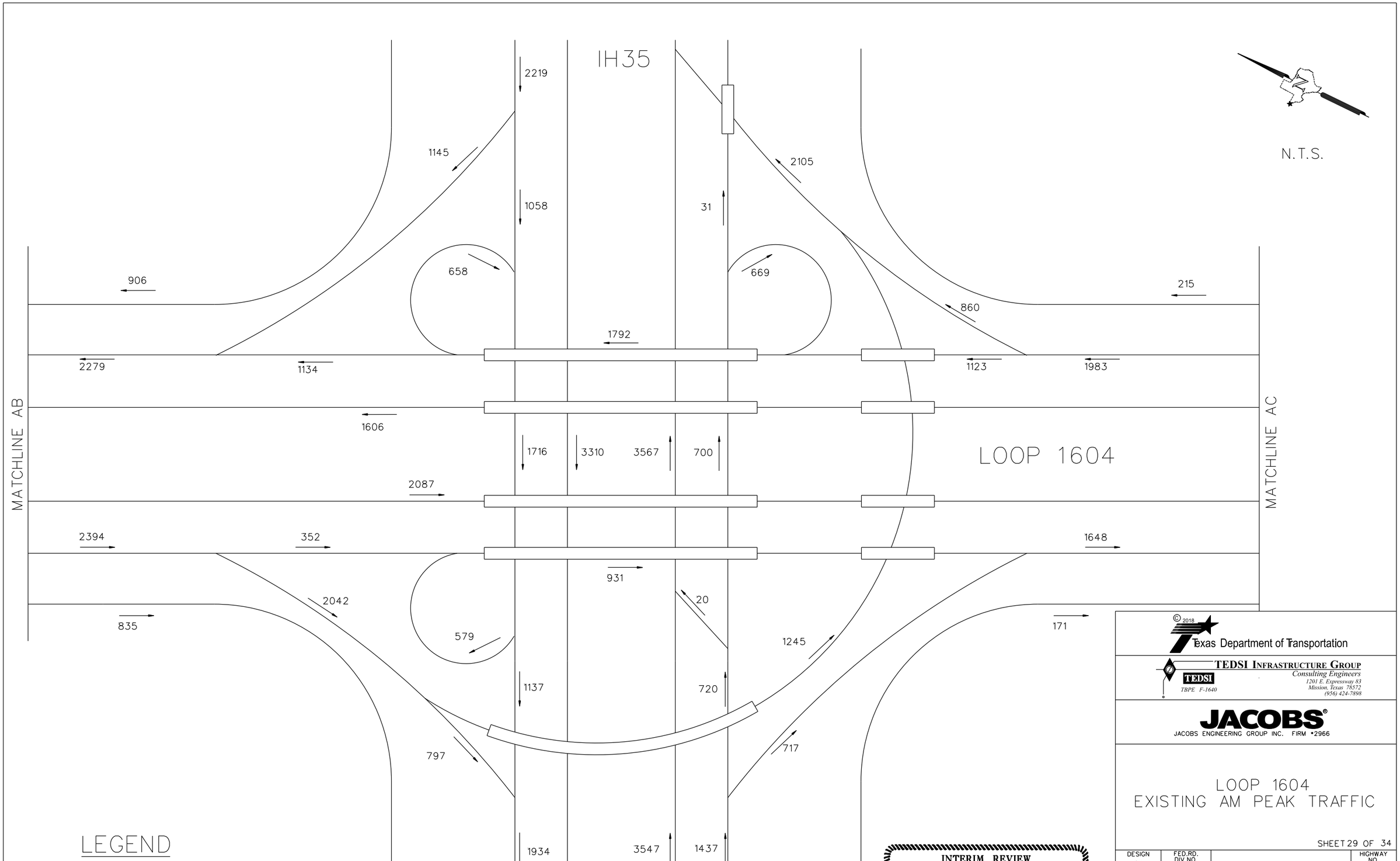

LEGEND

→ = TRAVEL DIRECTION

XXXXX = YEAR 2018 AM PEAK TRAFFIC

INTERIM REVIEW

THIS DOCUMENT IS RELEASED FOR THE PURPOSE OF INTERIM REVIEW UNDER THE AUTHORITY OF

ANDREW J. BALLARD, PE 59027 JAN. 31, 2019

IT IS NOT TO BE USED FOR CONSTRUCTION PURPOSES.

© 2018

Texas Department of Transportation

TEDSI INFRASTRUCTURE GROUP
Consulting Engineers
TBPE F-1640
1201 E. Expressway 83
Mission, Texas 78572
(956) 424-7898

JACOBS
JACOBS ENGINEERING GROUP INC. FIRM #2966

LOOP 1604
EXISTING AM PEAK TRAFFIC

SHEET 29 OF 34

DESIGN CK	FED.RD. DIV.NO.			HIGHWAY NO.
				LOOP 1604
CHECK PK	STATE	DISTRICT	COUNTY	SHEET NO.
GRAPHICS CC	TX	SAN ANTONIO	BEXAR	29
	CONTROL	SECTION	JOB	
CHECK PK	2452	01	068	

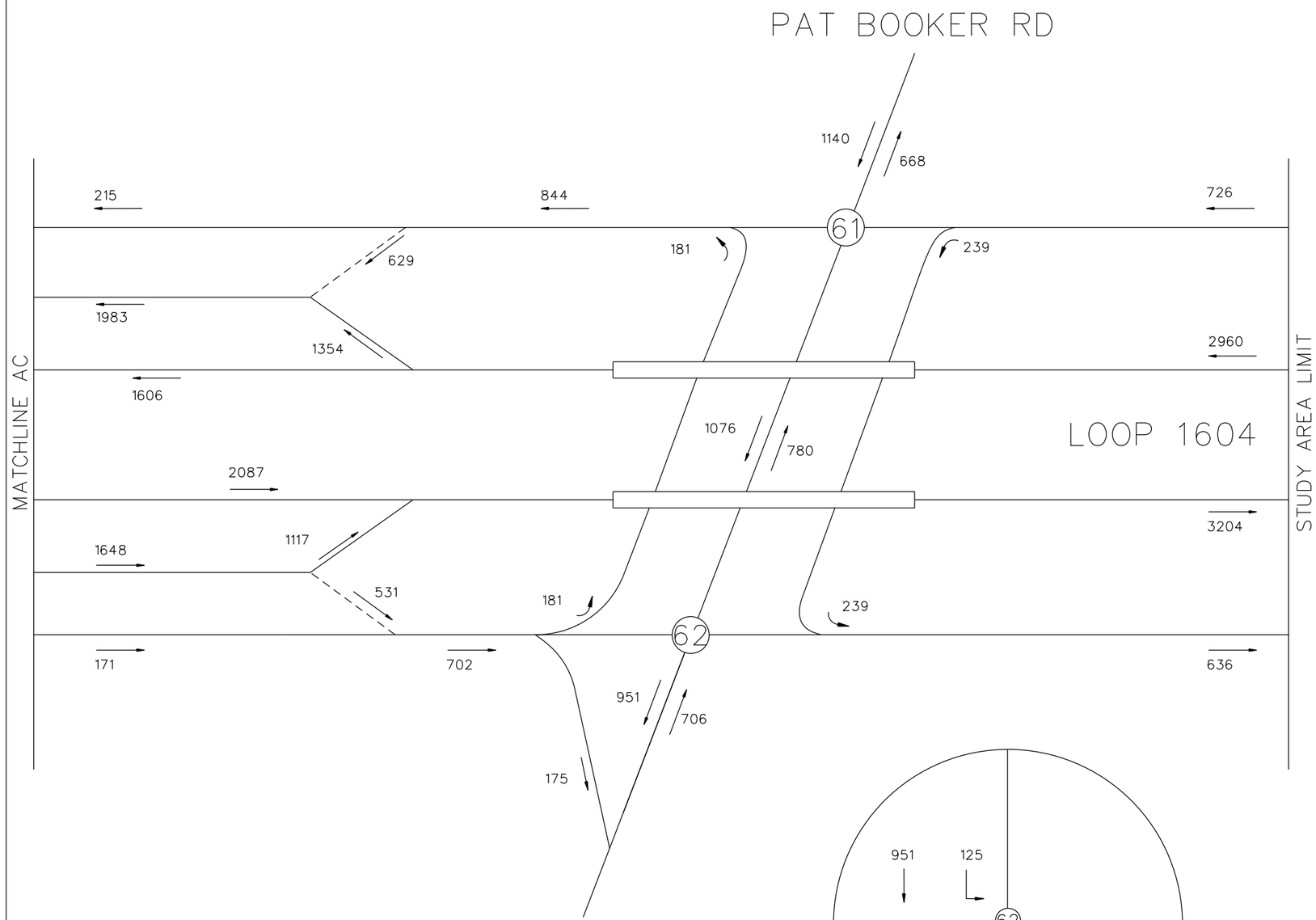

N.T.S.

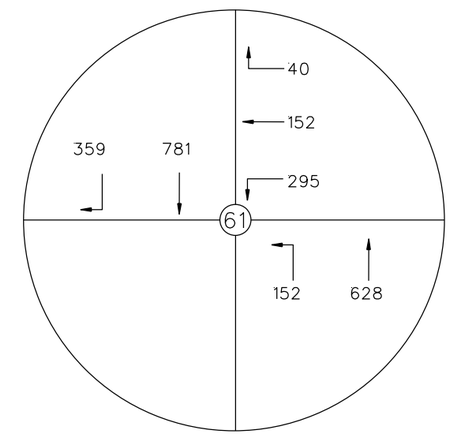

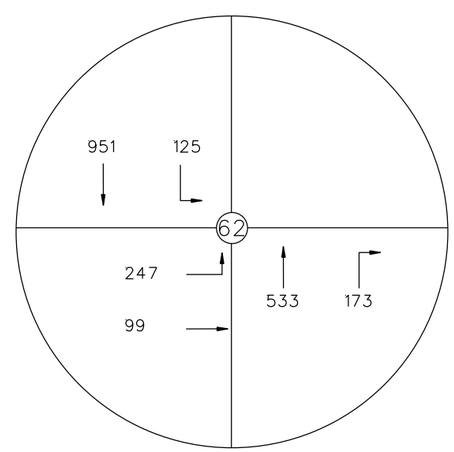

LEGEND

→ = TRAVEL DIRECTION

XXXXX = YEAR 2018 AM PEAK TRAFFIC

INTERIM REVIEW

THIS DOCUMENT IS RELEASED FOR THE PURPOSE OF INTERIM REVIEW UNDER THE AUTHORITY OF

ANDREW J. BALLARD, PE 59027 JAN. 31, 2019

IT IS NOT TO BE USED FOR CONSTRUCTION PURPOSES.

© 2018

Texas Department of Transportation

TEDSI INFRASTRUCTURE GROUP
Consulting Engineers
1201 E. Expressway 83
Mission, Texas 78572
(956) 424-7898
TBPE F-1640

JACOBS
JACOBS ENGINEERING GROUP INC. FIRM #2966

LOOP 1604
EXISTING AM PEAK TRAFFIC

SHEET 30 OF 34

DESIGN CK	FED.RD. DIV.NO.			HIGHWAY NO.
				LOOP 1604
CHECK PK	STATE	DISTRICT	COUNTY	SHEET NO.
GRAPHICS CC	TX	SAN ANTONIO	BEXAR	30
	CONTROL	SECTION	JOB	
CHECK PK	2452	01	068	

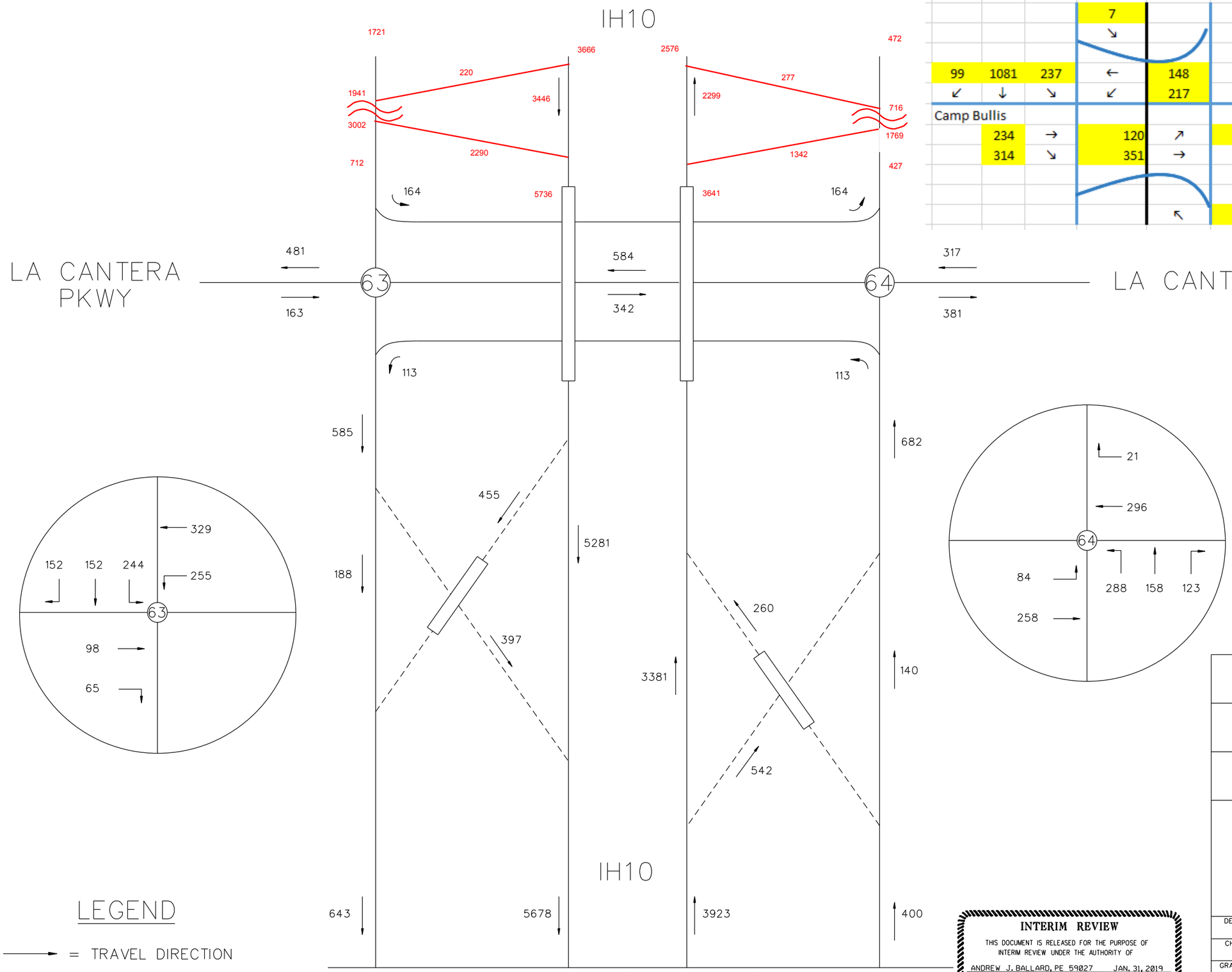

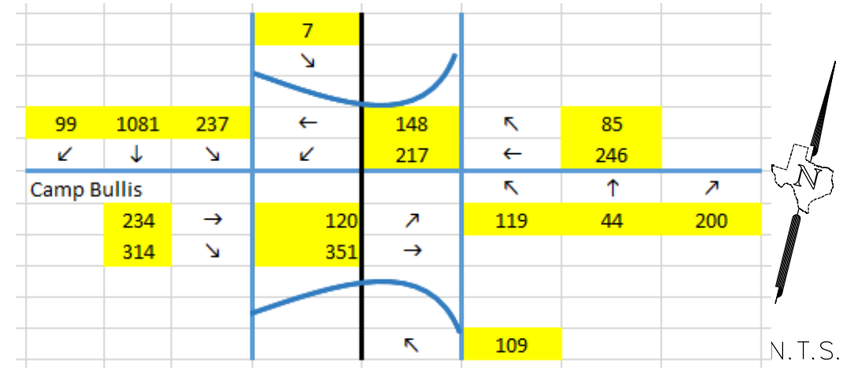

LEGEND

→ = TRAVEL DIRECTION

XXXXX = YEAR 2018 AM PEAK TRAFFIC

INTERIM REVIEW

THIS DOCUMENT IS RELEASED FOR THE PURPOSE OF INTERIM REVIEW UNDER THE AUTHORITY OF

ANDREW J. BALLARD, PE 59027 JAN. 31, 2019

IT IS NOT TO BE USED FOR CONSTRUCTION PURPOSES.

© 2018

Texas Department of Transportation

TEDSI INFRASTRUCTURE GROUP
Consulting Engineers
1201 E. Expressway 83
Mission, Texas 78572
(956) 424-7898
TBPE F-1640

JACOBS
JACOBS ENGINEERING GROUP INC. FIRM #2966

LOOP 1604
EXISTING AM PEAK TRAFFIC

SHEET 31 OF 34

DESIGN CK	FED.RD. DIV.NO.			HIGHWAY NO.
				LOOP 1604
CHECK PK	STATE	DISTRICT	COUNTY	SHEET NO.
GRAPHICS CC	TX	SAN ANTONIO	BEXAR	31
	CONTROL	SECTION	JOB	
CHECK PK	2452	01	068	

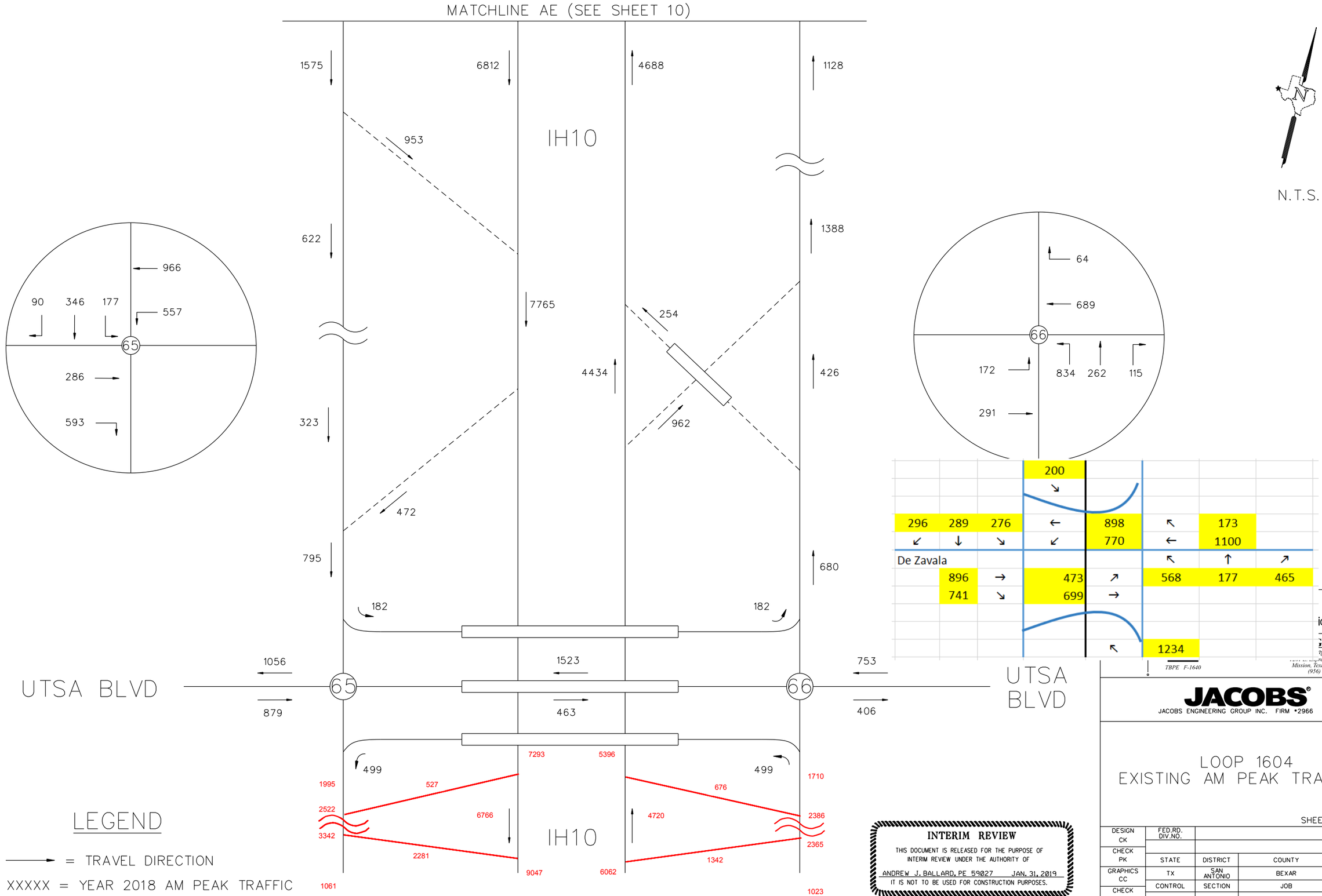
MATCHLINE AE (SEE SHEET 10)
N.T.S.
IH10
1575
6812
4688
1128
953
622
1388
7765
254
4434
426
962
323
472
795
680
182
182
966
90
346
177
557
65
286
593
64
689
66
172
834
262
115
291
200
296
289
276
898
173
770
1100
De Zavala
896
473
568
177
465
741
699
1234
UTSA BLVD
1056
879
1523
463
753
406
65
66
UTSA BLVD
499
499
7293
5396
1995
527
676
1710
2522
6766
4720
2386
3342
2365
2281
1342
9047
6062
1061
1023
IH10
LEGEND
= TRAVEL DIRECTION
XXXXX = YEAR 2018 AM PEAK TRAFFIC
INTERIM REVIEW
THIS DOCUMENT IS RELEASED FOR THE PURPOSE OF INTERIM REVIEW UNDER THE AUTHORITY OF
ANDREW J. BALLARD, PE 59027 JAN. 31, 2019
IT IS NOT TO BE USED FOR CONSTRUCTION PURPOSES.
TBPE F-1640
Mission, Texas 78572
(956) 424-7898
JACOBS
JACOBS ENGINEERING GROUP INC. FIRM #2966
LOOP 1604
EXISTING AM PEAK TRAFFIC
SHEET 32 OF 34
DESIGN CK
CHECK PK
GRAPHICS CC
CHECK PK
FED.RD. DIV.NO.
HIGHWAY NO.
LOOP 1604
STATE
DISTRICT
COUNTY
SHEET NO.
TX
SAN ANTONIO
BEXAR
32
CONTROL
SECTION
JOB
2452
01
068

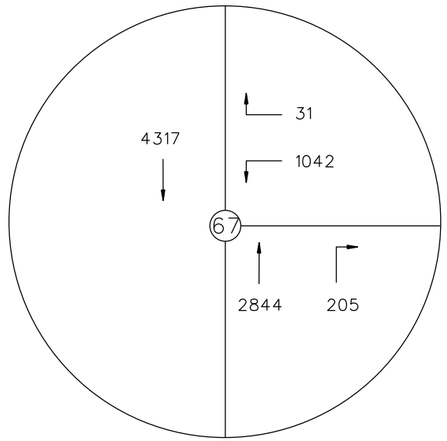

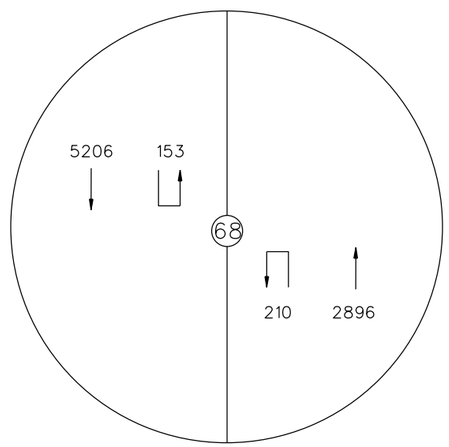

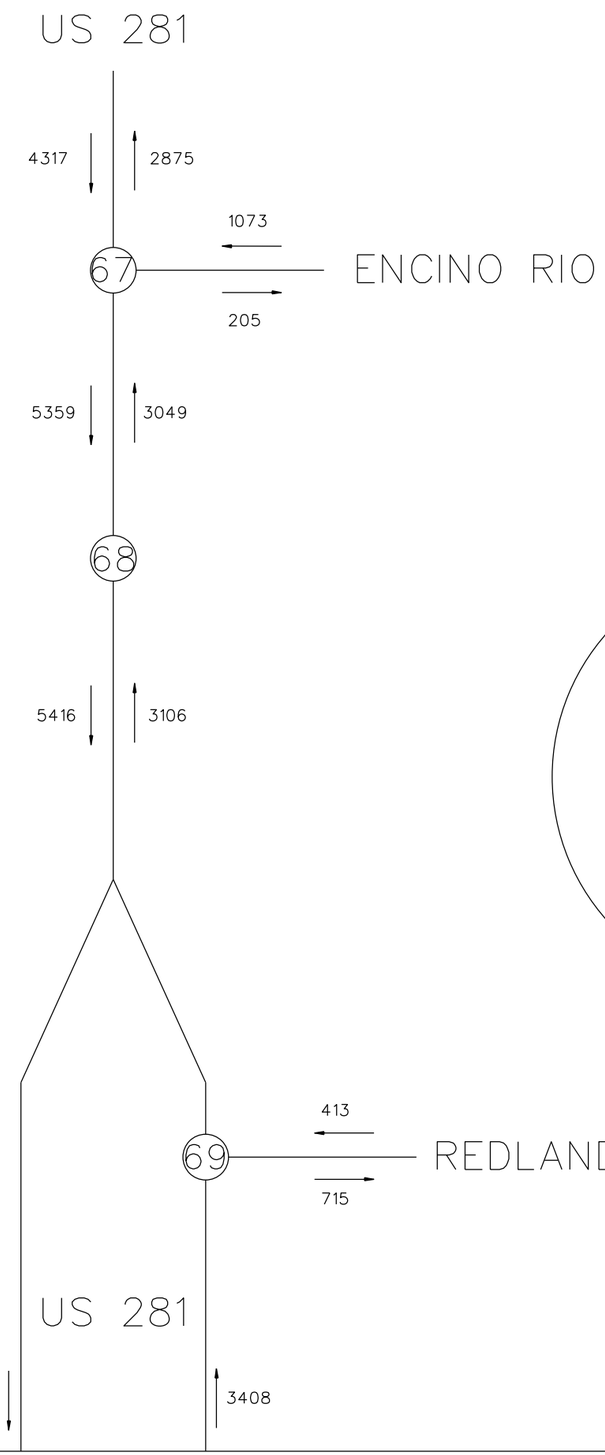

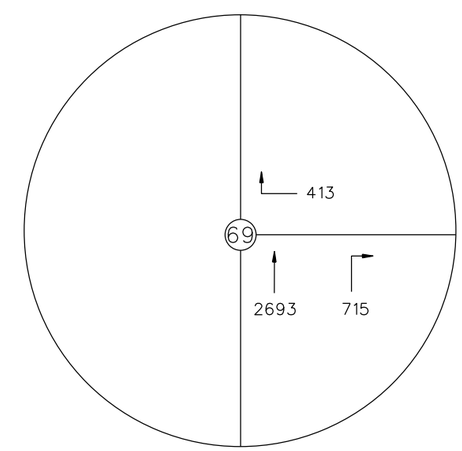

N.T.S.

LEGEND

→ = TRAVEL DIRECTION

XXXXX = YEAR 2018 AM PEAK TRAFFIC

INTERIM REVIEW

THIS DOCUMENT IS RELEASED FOR THE PURPOSE OF INTERIM REVIEW UNDER THE AUTHORITY OF

ANDREW J. BALLARD, PE 59027 JAN. 31, 2019

IT IS NOT TO BE USED FOR CONSTRUCTION PURPOSES.

© 2018

Texas Department of Transportation

TEDSI INFRASTRUCTURE GROUP
Consulting Engineers
TBPE F-1640
1201 E. Expressway 83
Mission, Texas 78572
(956) 424-7898

JACOBS
JACOBS ENGINEERING GROUP INC. FIRM #2966

LOOP 1604
EXISTING AM PEAK TRAFFIC

SHEET 33 OF 34

DESIGN CK	FED.RD. DIV.NO.			HIGHWAY NO.
CHECK PK				LOOP 1604
	STATE	DISTRICT	COUNTY	SHEET NO.
GRAPHICS CC	TX	SAN ANTONIO	BEXAR	33
CHECK PK	CONTROL	SECTION	JOB	
	2452	01	068	

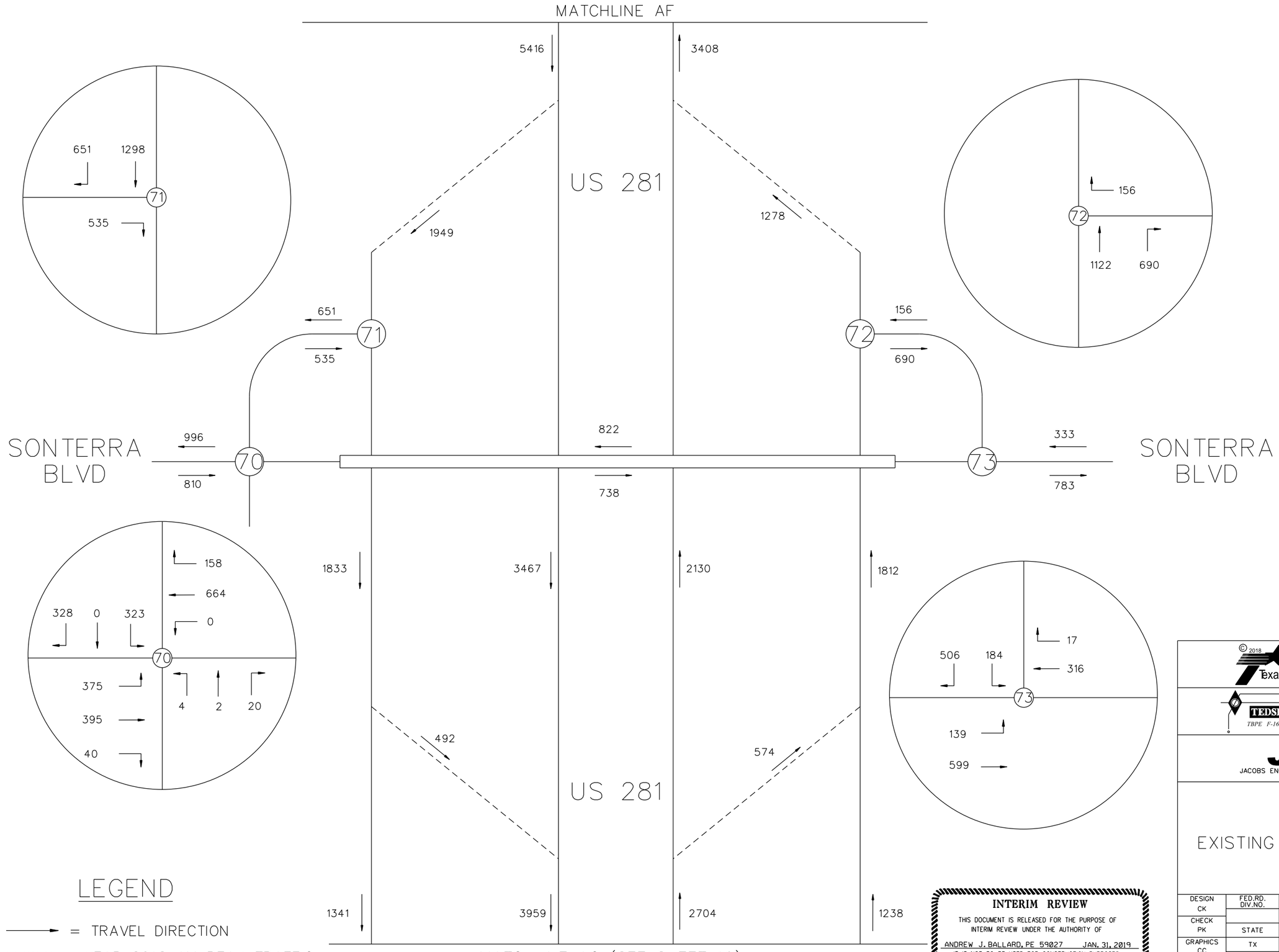

LEGEND

→ = TRAVEL DIRECTION

XXXXX = YEAR 2018 AM PEAK TRAFFIC

INTERIM REVIEW

THIS DOCUMENT IS RELEASED FOR THE PURPOSE OF INTERIM REVIEW UNDER THE AUTHORITY OF

ANDREW J. BALLARD, PE 59027 JAN. 31, 2019

IT IS NOT TO BE USED FOR CONSTRUCTION PURPOSES.

© 2018

Texas Department of Transportation

TEDSI INFRASTRUCTURE GROUP
Consulting Engineers
TBPE F-1640
1201 E. Expressway 83
Mission, Texas 78572
(956) 424-7898

JACOBS®
JACOBS ENGINEERING GROUP INC. FIRM #2966

LOOP 1604
EXISTING AM PEAK TRAFFIC

SHEET 34 OF 34

DESIGN CK	FED.RD. DIV.NO.			HIGHWAY NO.
CHECK PK				LOOP 1604
	STATE	DISTRICT	COUNTY	SHEET NO.
GRAPHICS CC	TX	SAN ANTONIO	BEXAR	34
	CONTROL	SECTION	JOB	
CHECK PK	2452	01	068	

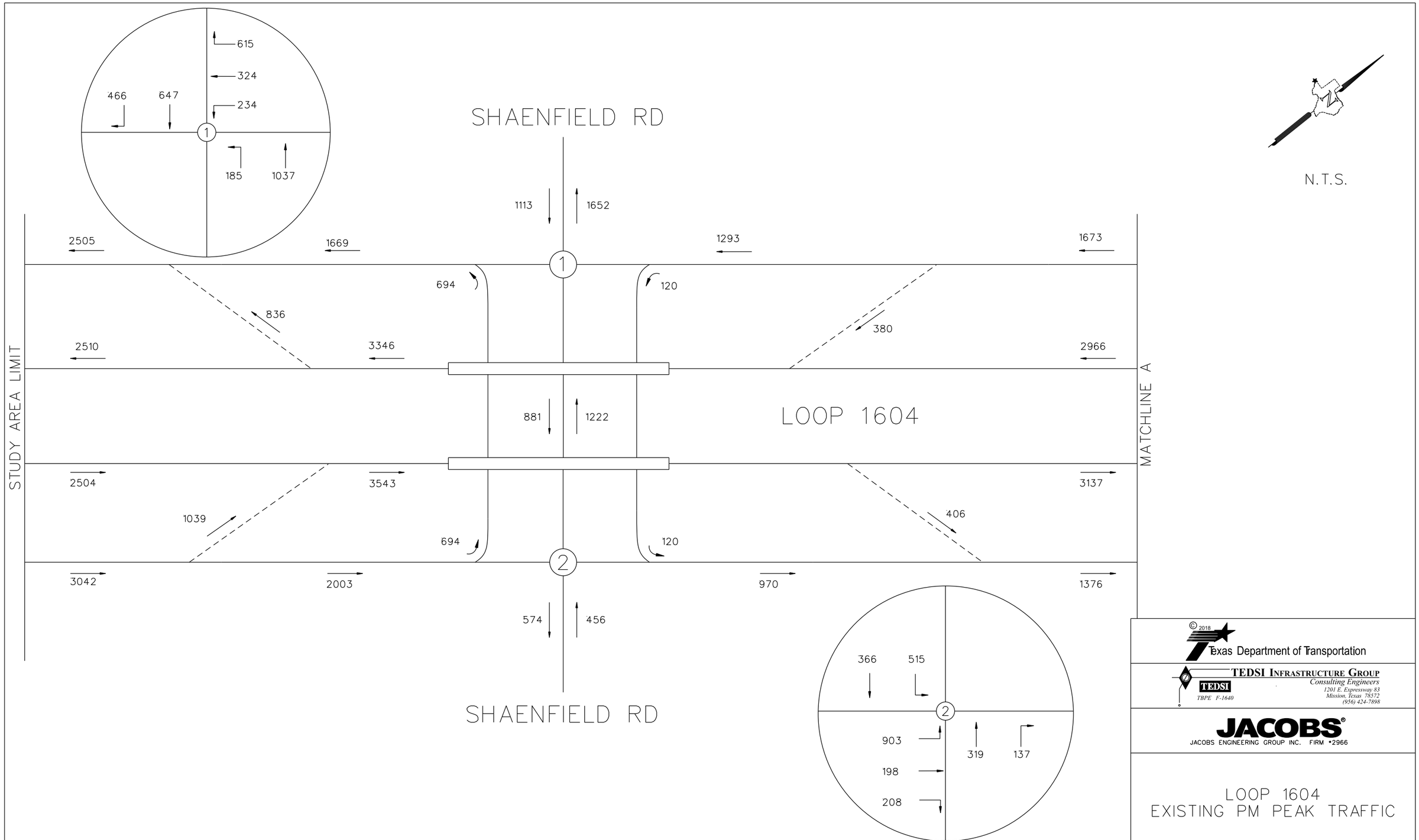

LEGEND

→ = TRAVEL DIRECTION

XXXXX = YEAR 2018 PM PEAK TRAFFIC

INTERIM REVIEW

THIS DOCUMENT IS RELEASED FOR THE PURPOSE OF INTERIM REVIEW UNDER THE AUTHORITY OF

ANDREW J. BALLARD, PE 59027 JAN. 3, 2019

IT IS NOT TO BE USED FOR CONSTRUCTION PURPOSES.

© 2018

Texas Department of Transportation

TEDSI INFRASTRUCTURE GROUP
Consulting Engineers
TBPE F-1640
1201 E. Expressway 83
Mission, Texas 78572
(956) 424-7898

JACOBS
JACOBS ENGINEERING GROUP INC. FIRM #2966

LOOP 1604
EXISTING PM PEAK TRAFFIC

SHEET 1 OF 34

DESIGN CK	FED.RD. DIV.NO.			HIGHWAY NO.
CHECK PK				LOOP 1604
	STATE	DISTRICT	COUNTY	SHEET NO.
GRAPHICS CC	TX	SAN ANTONIO	BEXAR	1
CHECK PK	CONTROL	SECTION	JOB	
	2452	01	068	

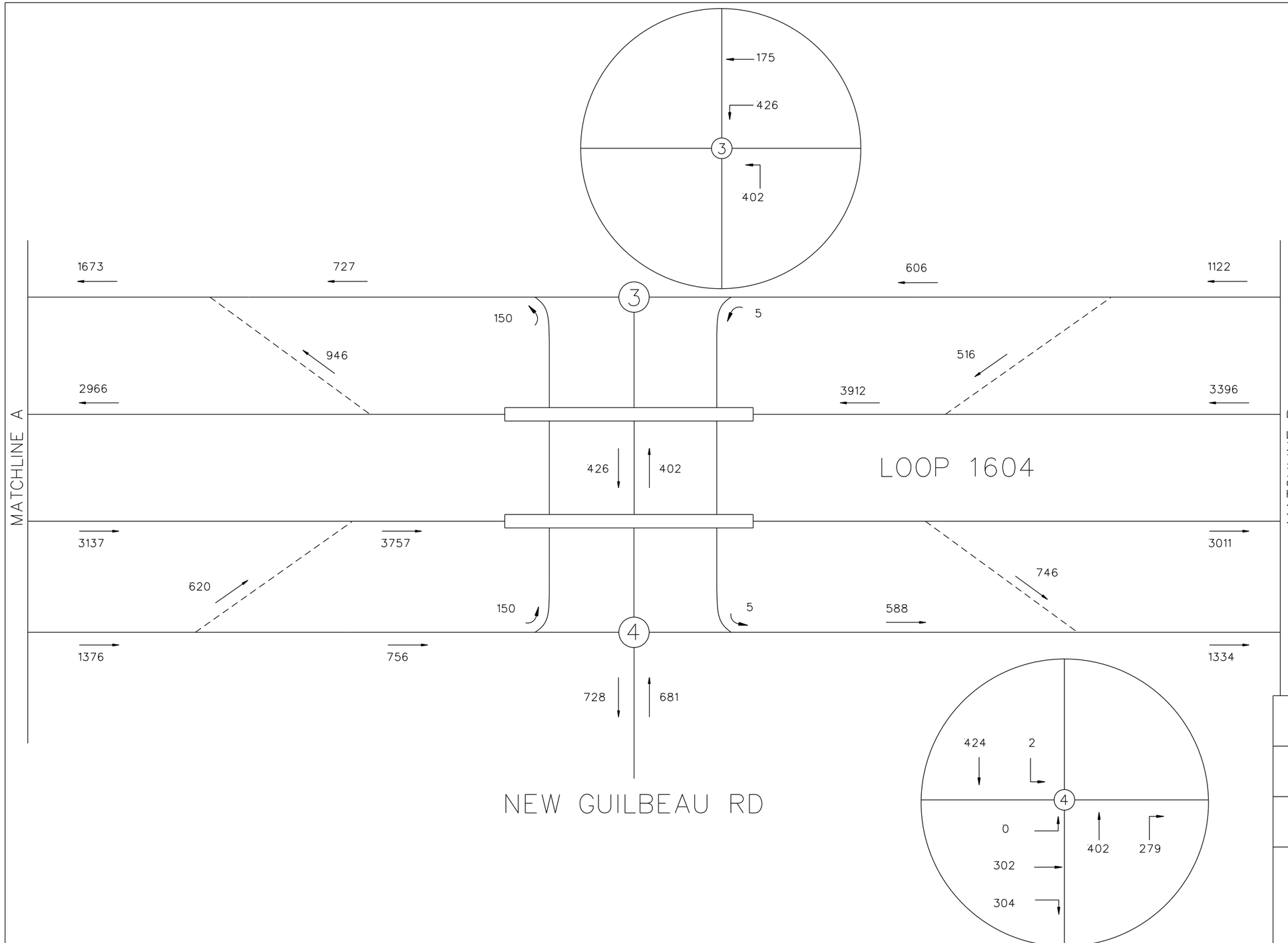

N.T.S.

LEGEND

→ = TRAVEL DIRECTION

XXXXX = YEAR 2018 PM PEAK TRAFFIC

INTERIM REVIEW

THIS DOCUMENT IS RELEASED FOR THE PURPOSE OF INTERIM REVIEW UNDER THE AUTHORITY OF

ANDREW J. BALLARD, PE 59027 JAN. 3, 2019

IT IS NOT TO BE USED FOR CONSTRUCTION PURPOSES.

© 2018

Texas Department of Transportation

TEDSI INFRASTRUCTURE GROUP
Consulting Engineers
TBPE F-1640
1201 E. Expressway 83
Mission, Texas 78572
(956) 424-7898

JACOBS®
JACOBS ENGINEERING GROUP INC. FIRM #2966

LOOP 1604
EXISTING PM PEAK TRAFFIC

SHEET 2 OF 34

DESIGN CK	FED.RD. DIV.NO.			HIGHWAY NO.
				LOOP 1604
CHECK PK	STATE	DISTRICT	COUNTY	SHEET NO.
GRAPHICS CC	TX	SAN ANTONIO	BEXAR	2
	CONTROL	SECTION	JOB	
CHECK PK	2452	01	068	

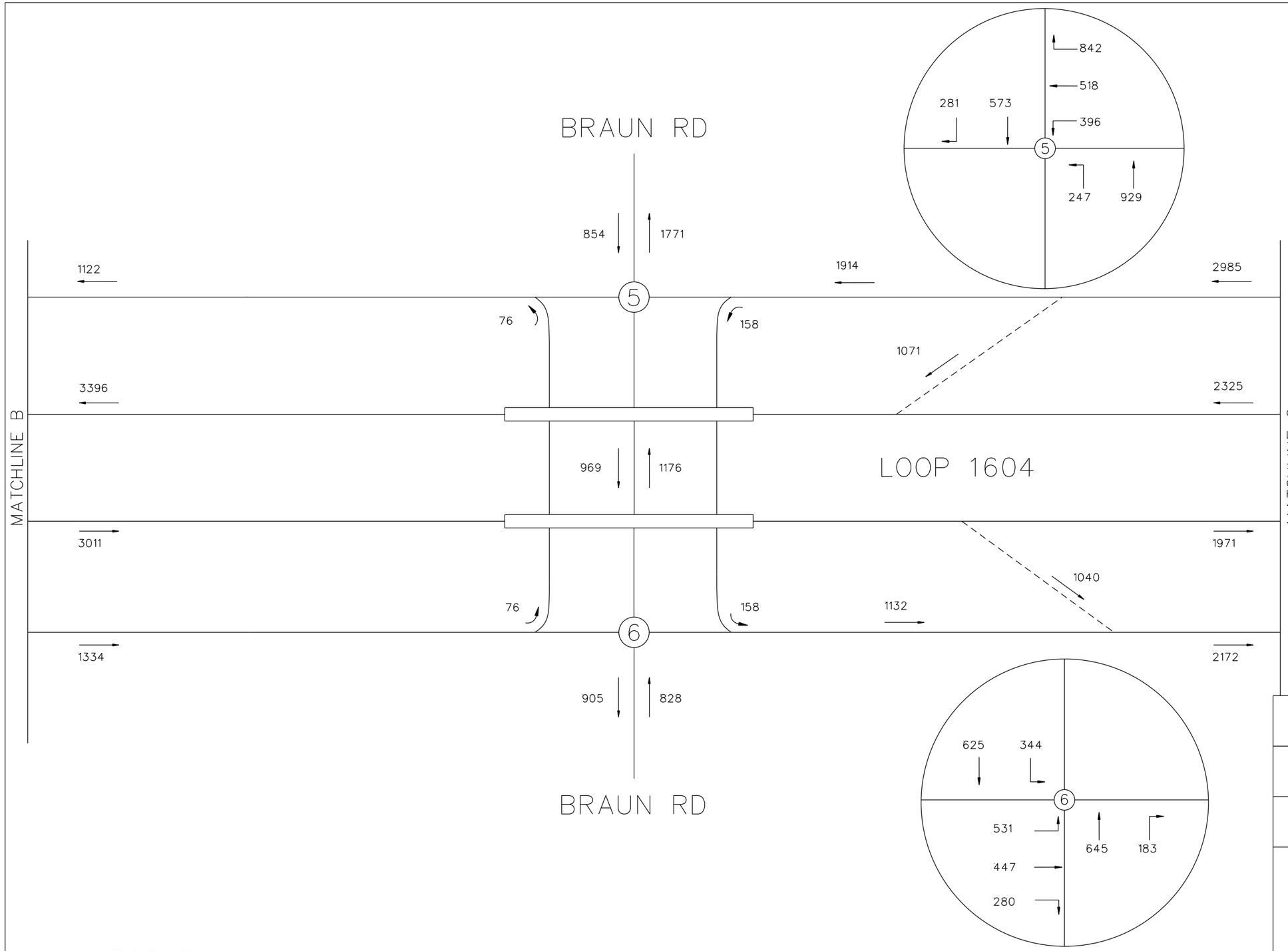

N.T.S.

LEGEND

→ = TRAVEL DIRECTION

XXXXX = YEAR 2018 PM PEAK TRAFFIC

INTERIM REVIEW

THIS DOCUMENT IS RELEASED FOR THE PURPOSE OF INTERIM REVIEW UNDER THE AUTHORITY OF

ANDREW J. BALLARD, PE 59027 JAN. 3, 2019

IT IS NOT TO BE USED FOR CONSTRUCTION PURPOSES.

© 2018

Texas Department of Transportation

TEDSI INFRASTRUCTURE GROUP
Consulting Engineers
TBPE F-1640
1201 E. Expressway 83
Mission, Texas 78572
(956) 424-7898

JACOBS
JACOBS ENGINEERING GROUP INC. FIRM #2966

LOOP 1604
EXISTING PM PEAK TRAFFIC

SHEET 3 OF 34

DESIGN CK	FED.RD. DIV.NO.			HIGHWAY NO.
CHECK PK				LOOP 1604
	STATE	DISTRICT	COUNTY	SHEET NO.
GRAPHICS CC	TX	SAN ANTONIO	BEXAR	3
	CONTROL	SECTION	JOB	
CHECK PK	2452	01	068	

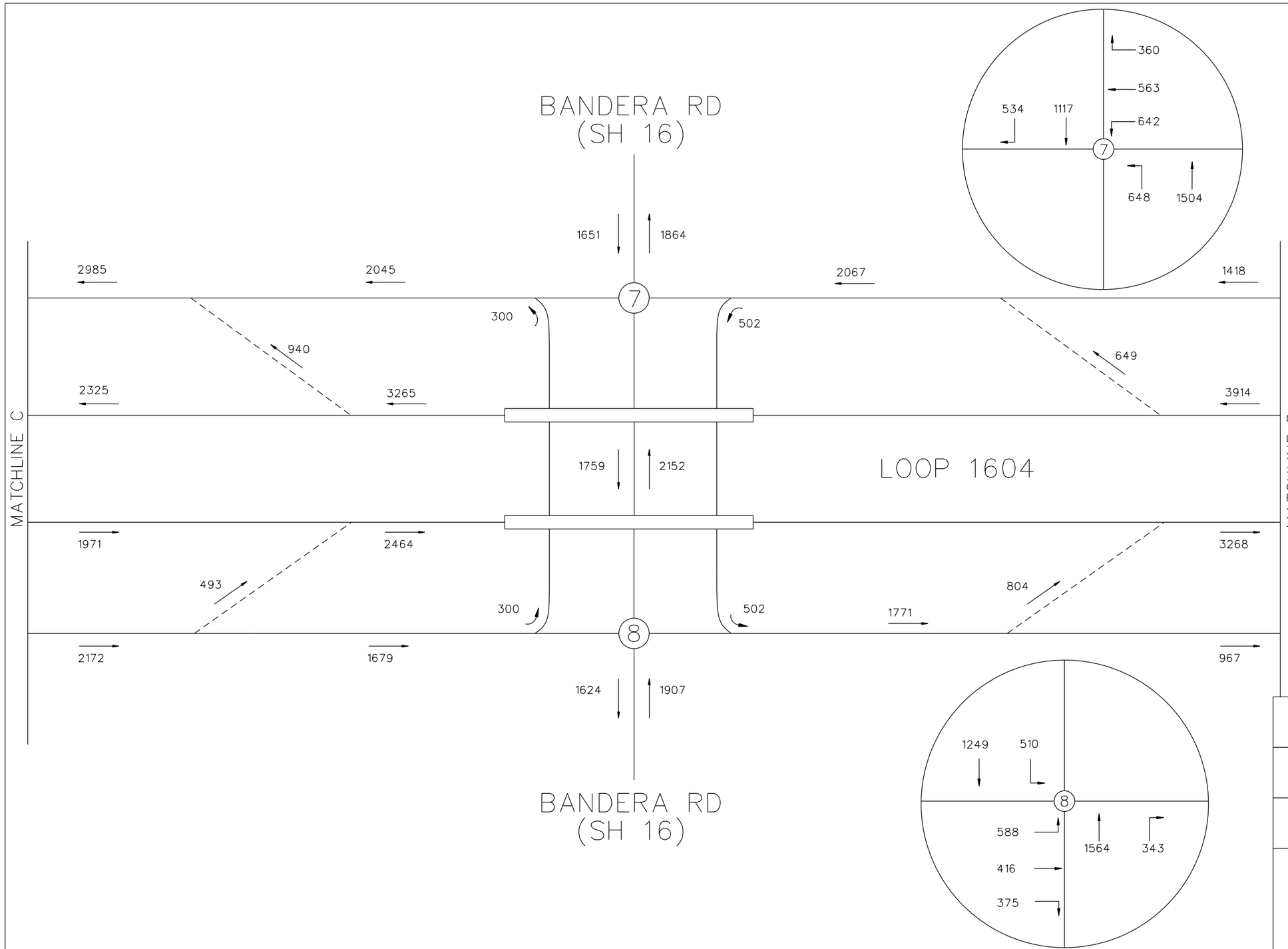

N.T.S.

LEGEND

→ = TRAVEL DIRECTION

XXXXX = YEAR 2018 PM PEAK TRAFFIC

INTERIM REVIEW

THIS DOCUMENT IS RELEASED FOR THE PURPOSE OF INTERIM REVIEW UNDER THE AUTHORITY OF

ANDREW J. BALLARD, PE 59027 JAN. 3, 2019

IT IS NOT TO BE USED FOR CONSTRUCTION PURPOSES.

© 2018

Texas Department of Transportation

TEDSI INFRASTRUCTURE GROUP
Consulting Engineers
1201 E. Expressway 83
Mission, Texas 78572
(956) 424-7898
TBPE F-1640

JACOBS
JACOBS ENGINEERING GROUP INC. FIRM #2966

LOOP 1604
EXISTING PM PEAK TRAFFIC

SHEET 4 OF 34

DESIGN CK	FED.RD. DIV.NO.			HIGHWAY NO.
CHECK PK				LOOP 1604
	STATE	DISTRICT	COUNTY	SHEET NO.
GRAPHICS CC	TX	SAN ANTONIO	BEXAR	4
CHECK PK	CONTROL	SECTION	JOB	
	2452	01	068	

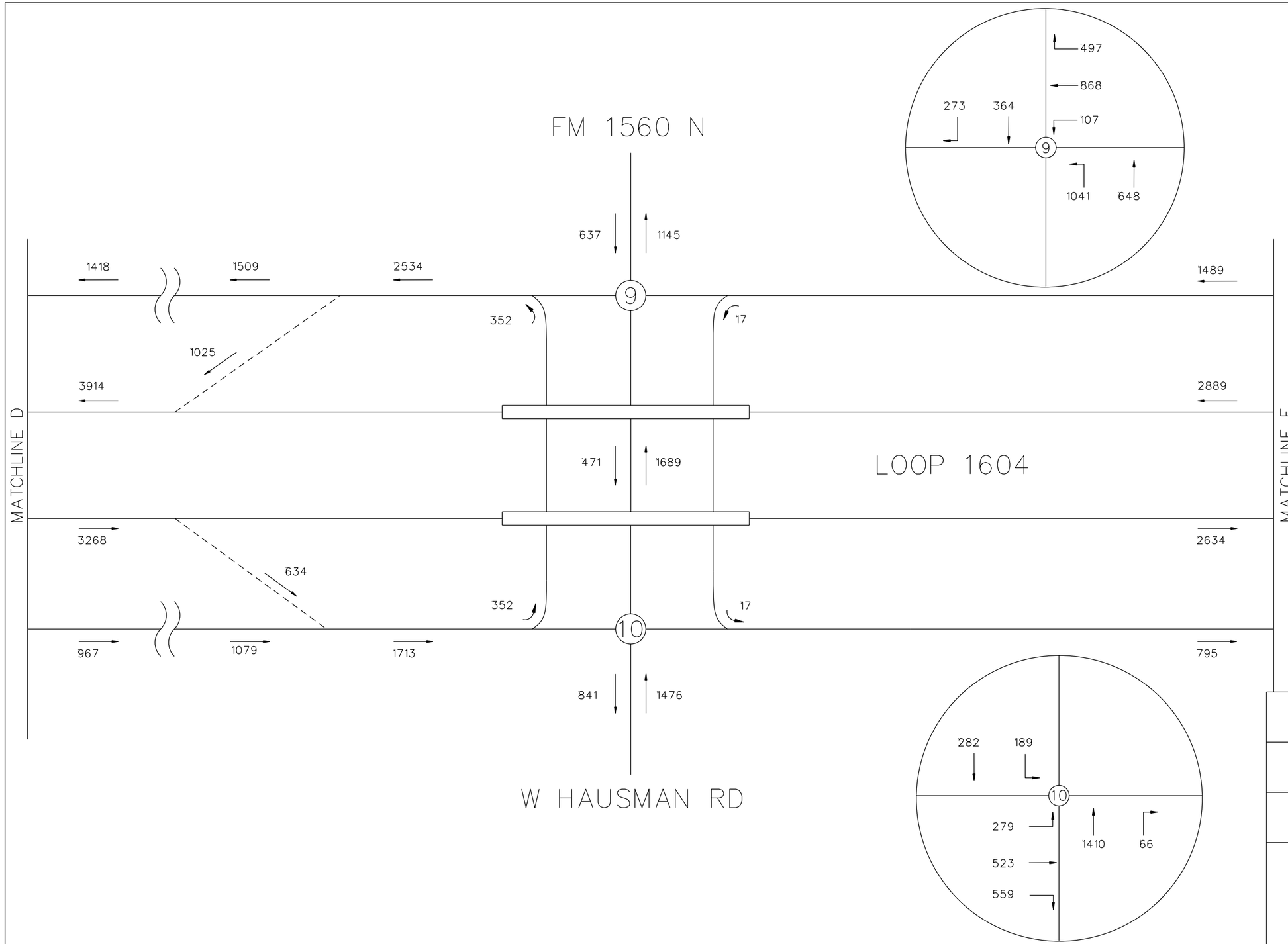

N.T.S.

LEGEND

→ = TRAVEL DIRECTION

XXXXX = YEAR 2018 PM PEAK TRAFFIC

INTERIM REVIEW

THIS DOCUMENT IS RELEASED FOR THE PURPOSE OF INTERIM REVIEW UNDER THE AUTHORITY OF

ANDREW J. BALLARD, PE 59027 JAN. 3, 2019

IT IS NOT TO BE USED FOR CONSTRUCTION PURPOSES.

© 2018

Texas Department of Transportation

TEDSI INFRASTRUCTURE GROUP
Consulting Engineers
TBPE F-1640
1201 E. Expressway 83
Mission, Texas 78572
(956) 424-7898

JACOBS®
JACOBS ENGINEERING GROUP INC. FIRM #2966

LOOP 1604
EXISTING PM PEAK TRAFFIC

SHEET 5 OF 34

DESIGN CK	FED.RD. DIV.NO.			HIGHWAY NO.
CHECK PK				LOOP 1604
	STATE	DISTRICT	COUNTY	SHEET NO.
GRAPHICS CC	TX	SAN ANTONIO	BEXAR	5
	CONTROL	SECTION	JOB	
CHECK PK	2452	01	068	

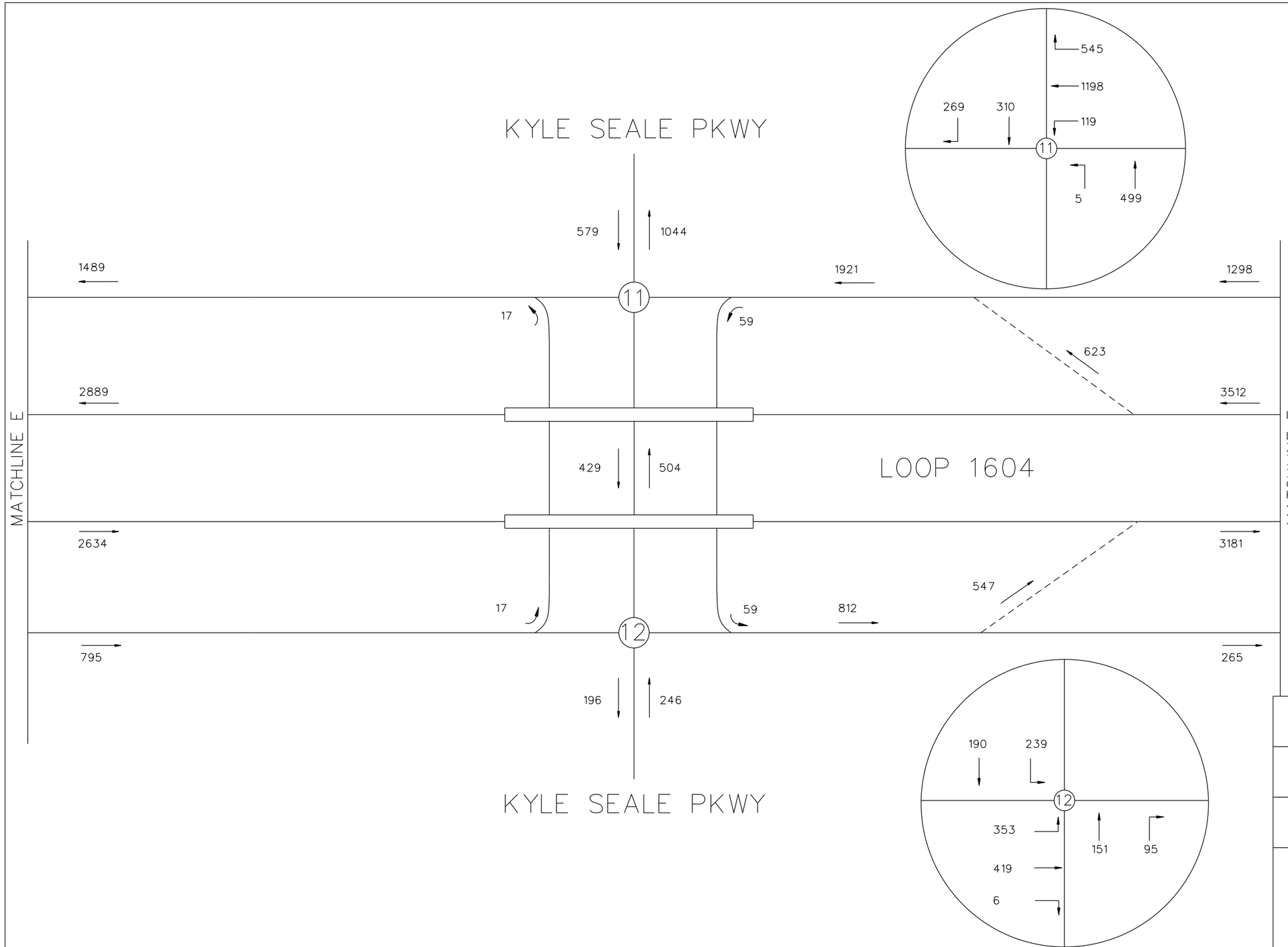

N.T.S.

LEGEND

→ = TRAVEL DIRECTION

XXXXX = YEAR 2018 PM PEAK TRAFFIC

INTERIM REVIEW

THIS DOCUMENT IS RELEASED FOR THE PURPOSE OF INTERIM REVIEW UNDER THE AUTHORITY OF

ANDREW J. BALLARD, PE 59027 JAN. 3, 2019

IT IS NOT TO BE USED FOR CONSTRUCTION PURPOSES.

© 2018

Texas Department of Transportation

TEDSI INFRASTRUCTURE GROUP
Consulting Engineers
TBPE F-1640
1201 E. Expressway 83
Mission, Texas 78572
(956) 424-7898

JACOBS
JACOBS ENGINEERING GROUP INC. FIRM #2966

LOOP 1604
EXISTING PM PEAK TRAFFIC

SHEET 6 OF 34

DESIGN CK	FED.RD. DIV.NO.			HIGHWAY NO.
				LOOP 1604
CHECK PK	STATE	DISTRICT	COUNTY	SHEET NO.
GRAPHICS CC	TX	SAN ANTONIO	BEXAR	6
	CONTROL	SECTION	JOB	
CHECK PK	2452	01	068	

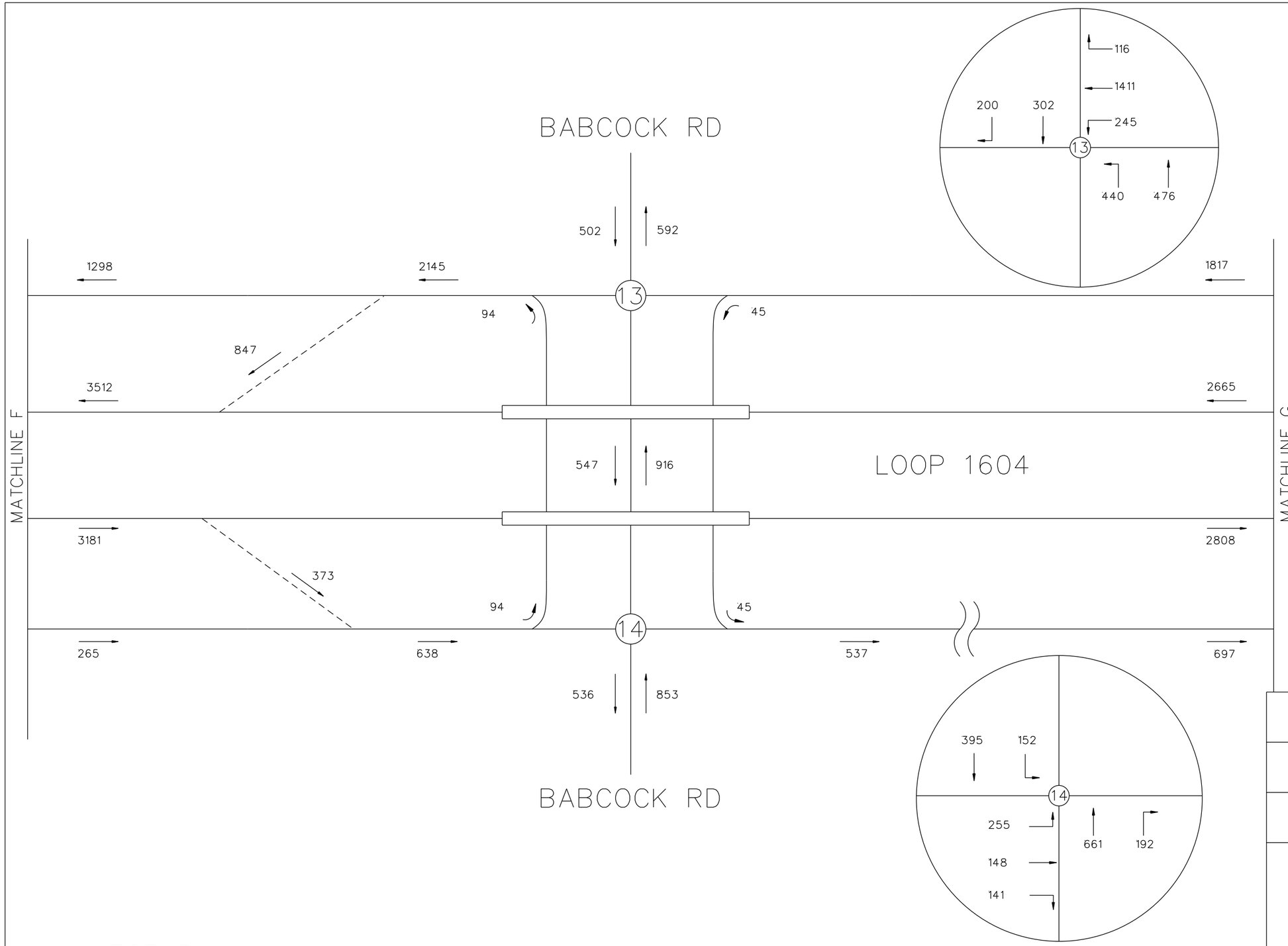

N.T.S.

LEGEND

→ = TRAVEL DIRECTION

XXXXX = YEAR 2018 PM PEAK TRAFFIC

INTERIM REVIEW

THIS DOCUMENT IS RELEASED FOR THE PURPOSE OF INTERIM REVIEW UNDER THE AUTHORITY OF

ANDREW J. BALLARD, PE 59027 JAN. 3, 2019

IT IS NOT TO BE USED FOR CONSTRUCTION PURPOSES.

© 2018

Texas Department of Transportation

TEDSI INFRASTRUCTURE GROUP
Consulting Engineers
1201 E. Expressway 83
Mission, Texas 78572
(956) 424-7898
TBPE F-1640

JACOBS®
JACOBS ENGINEERING GROUP INC. FIRM #2966

LOOP 1604
EXISTING PM PEAK TRAFFIC

SHEET 7 OF 34

DESIGN CK	FED.RD. DIV.NO.			HIGHWAY NO.
CHECK PK				LOOP 1604
	STATE	DISTRICT	COUNTY	SHEET NO.
GRAPHICS CC	TX	SAN ANTONIO	BEXAR	7
	CONTROL	SECTION	JOB	
CHECK PK	2452	01	068	

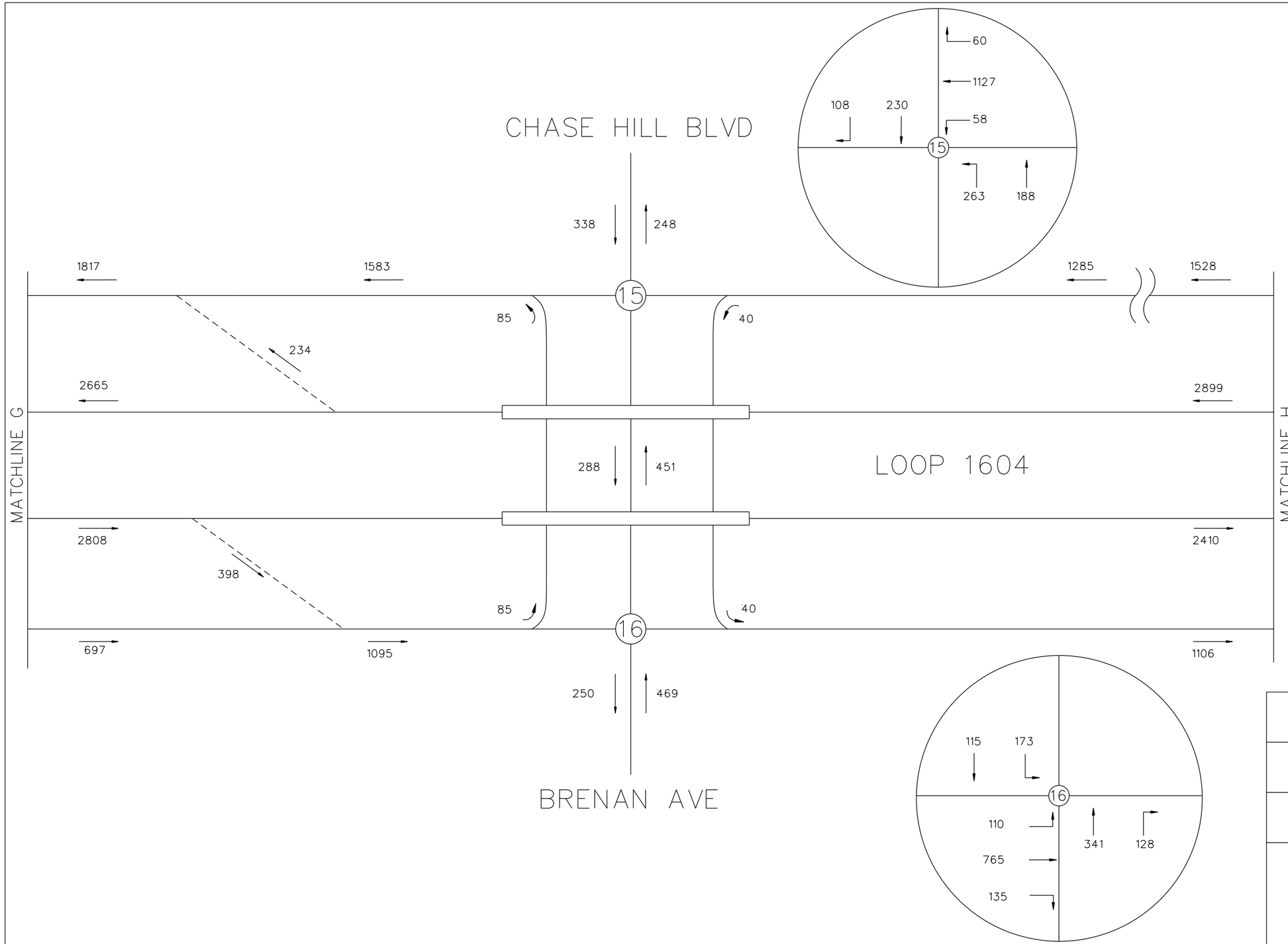

N.T.S.

LEGEND

→ = TRAVEL DIRECTION

XXXXX = YEAR 2018 PM PEAK TRAFFIC

INTERIM REVIEW

THIS DOCUMENT IS RELEASED FOR THE PURPOSE OF INTERIM REVIEW UNDER THE AUTHORITY OF

ANDREW J. BALLARD, PE 59027 JAN. 3, 2019

IT IS NOT TO BE USED FOR CONSTRUCTION PURPOSES.

© 2018

Texas Department of Transportation

TEDSI INFRASTRUCTURE GROUP
Consulting Engineers
1201 E. Expressway 83
Mission, Texas 78572
(956) 424-7898
TBPE F-1640

JACOBS®
JACOBS ENGINEERING GROUP INC. FIRM #2966

LOOP 1604
EXISTING PM PEAK TRAFFIC

SHEET 8 OF 34

DESIGN CK	FED.RD. DIV.NO.			HIGHWAY NO.
CHECK PK				LOOP 1604
	STATE	DISTRICT	COUNTY	SHEET NO.
GRAPHICS CC	TX	SAN ANTONIO	BEXAR	8
	CONTROL	SECTION	JOB	
CHECK PK	2452	01	068	

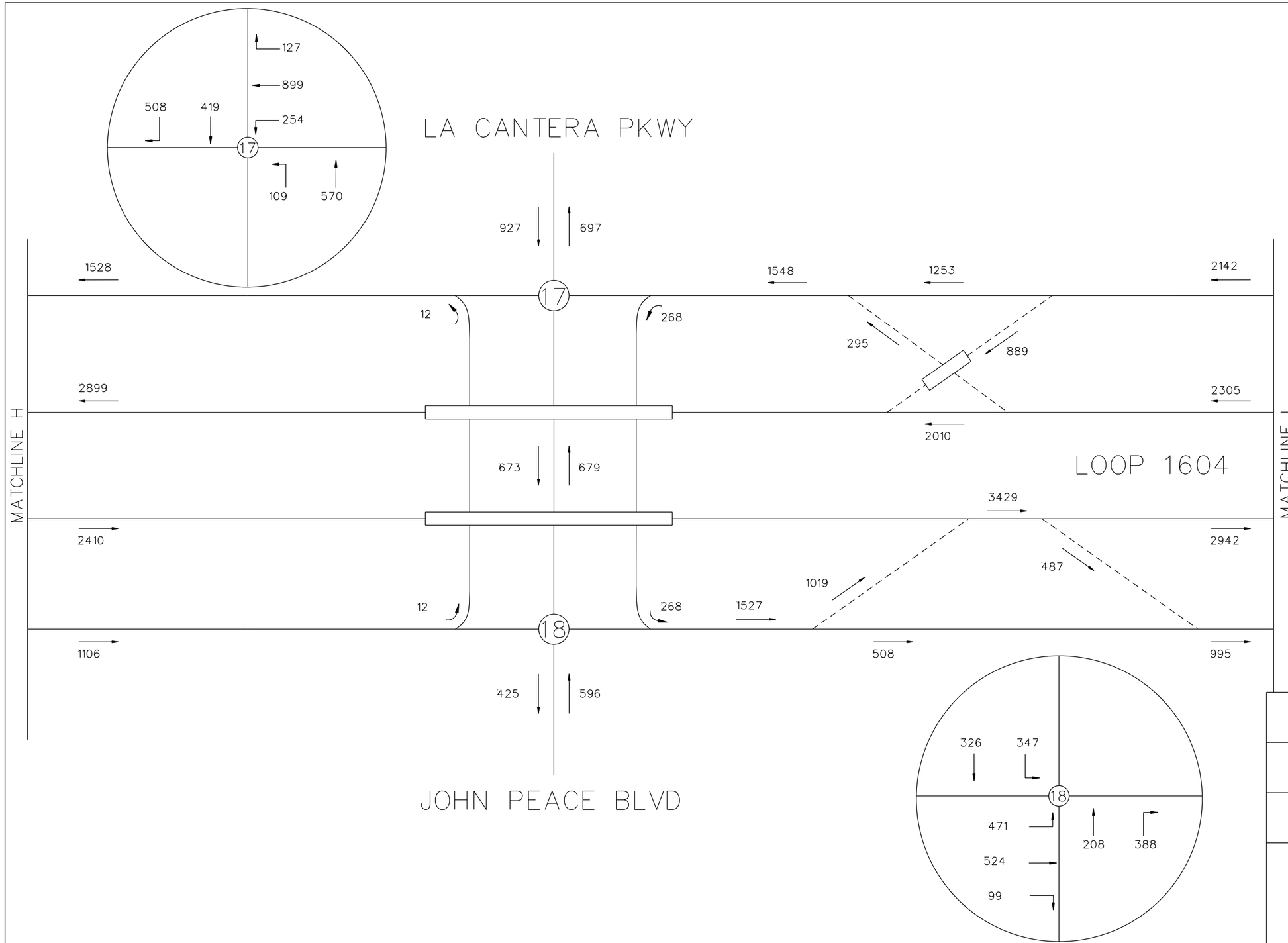

N.T.S.

LEGEND

→ = TRAVEL DIRECTION

XXXXX = YEAR 2018 PM PEAK TRAFFIC

INTERIM REVIEW

THIS DOCUMENT IS RELEASED FOR THE PURPOSE OF INTERIM REVIEW UNDER THE AUTHORITY OF

ANDREW J. BALLARD, PE 59027 JAN. 3, 2019

IT IS NOT TO BE USED FOR CONSTRUCTION PURPOSES.

© 2018

Texas Department of Transportation

TEDSI INFRASTRUCTURE GROUP
Consulting Engineers
1201 E. Expressway 83
Mission, Texas 78572
(956) 424-7898
TBPE F-1640

JACOBS®
JACOBS ENGINEERING GROUP INC. FIRM #2966

LOOP 1604
EXISTING PM PEAK TRAFFIC

SHEET 9 OF 34

DESIGN CK	FED.RD. DIV.NO.			HIGHWAY NO.
CHECK PK				LOOP 1604
	STATE	DISTRICT	COUNTY	SHEET NO.
GRAPHICS CC	TX	SAN ANTONIO	BEXAR	9
CHECK PK	CONTROL	SECTION	JOB	
	2452	01	068	

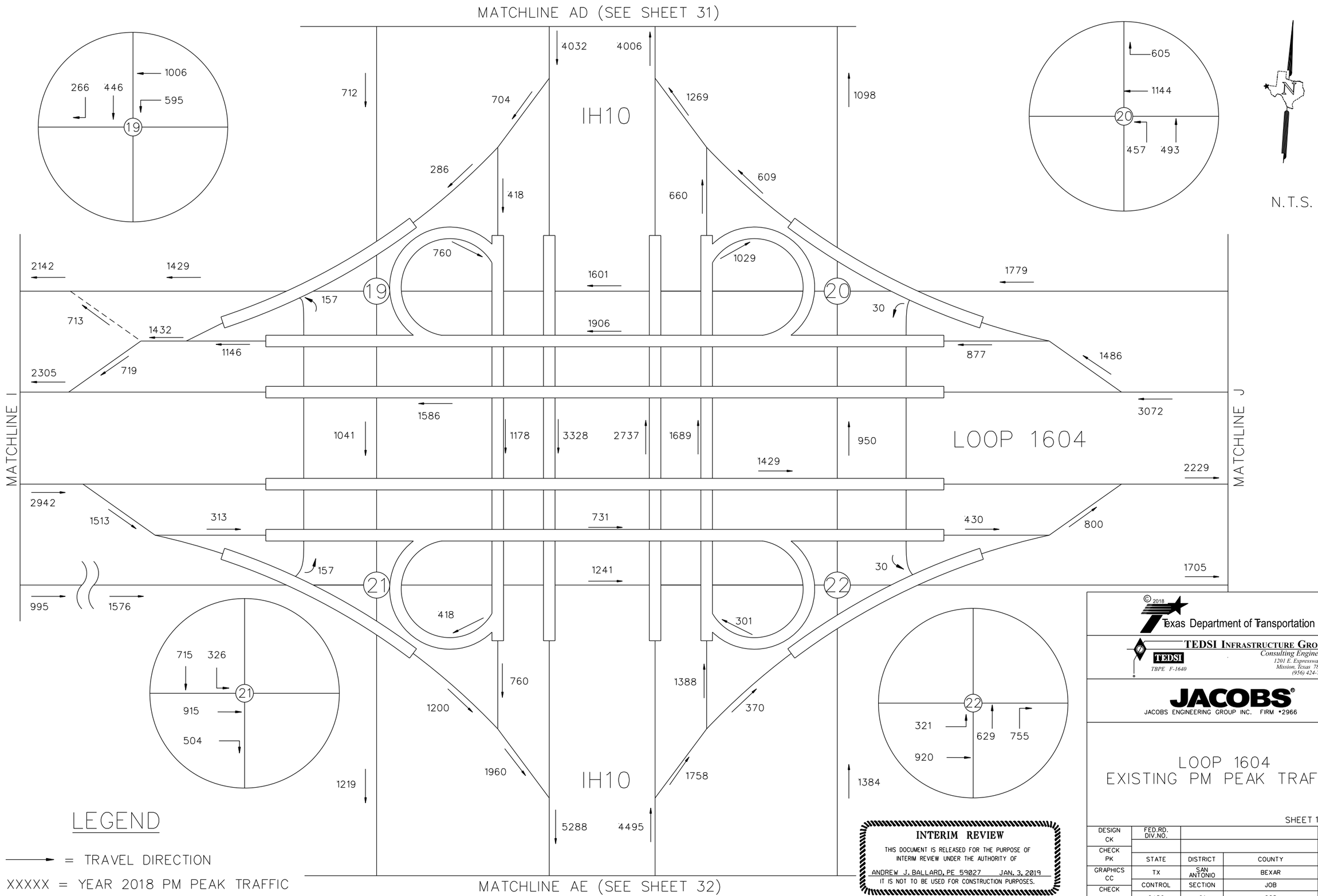
MATCHLINE AD (SEE SHEET 31)
IH10
LOOP 1604
MATCHLINE I
MATCHLINE J
MATCHLINE AE (SEE SHEET 32)
N.T.S.
4032
4006
712
704
1269
1098
286
418
660
609
760
1029
2142
1429
1601
1779
157
30
713
1432
1906
1146
877
1486
2305
719
1586
3072
1041
1178
3328
2737
1689
950
1429
2229
2942
1513
313
731
430
800
157
30
1241
1705
995
1576
418
301
760
1388
1200
370
1960
1758
1219
1384
5288
4495
605
1144
457
493
266
446
1006
595
715
326
915
504
321
629
755
920
LEGEND
= TRAVEL DIRECTION
XXXXX = YEAR 2018 PM PEAK TRAFFIC
INTERIM REVIEW
THIS DOCUMENT IS RELEASED FOR THE PURPOSE OF INTERIM REVIEW UNDER THE AUTHORITY OF
ANDREW J. BALLARD, PE 59027 JAN. 3, 2019
IT IS NOT TO BE USED FOR CONSTRUCTION PURPOSES.
© 2018
Texas Department of Transportation
TEDSI INFRASTRUCTURE GROUP
Consulting Engineers
1201 E. Expressway 83
Mission, Texas 78572
(956) 424-7898
TBPE F-1640
JACOBS
JACOBS ENGINEERING GROUP INC. FIRM #2966
LOOP 1604
EXISTING PM PEAK TRAFFIC
SHEET 10 OF 34
DESIGN CK
CHECK PK
GRAPHICS CC
CHECK PK
FED.RD. DIV.NO.
STATE
CONTROL
2452
DISTRICT
TX
SAN ANTONIO
SECTION
01
COUNTY
BEXAR
JOB
068
HIGHWAY NO.
LOOP 1604
SHEET NO.
10

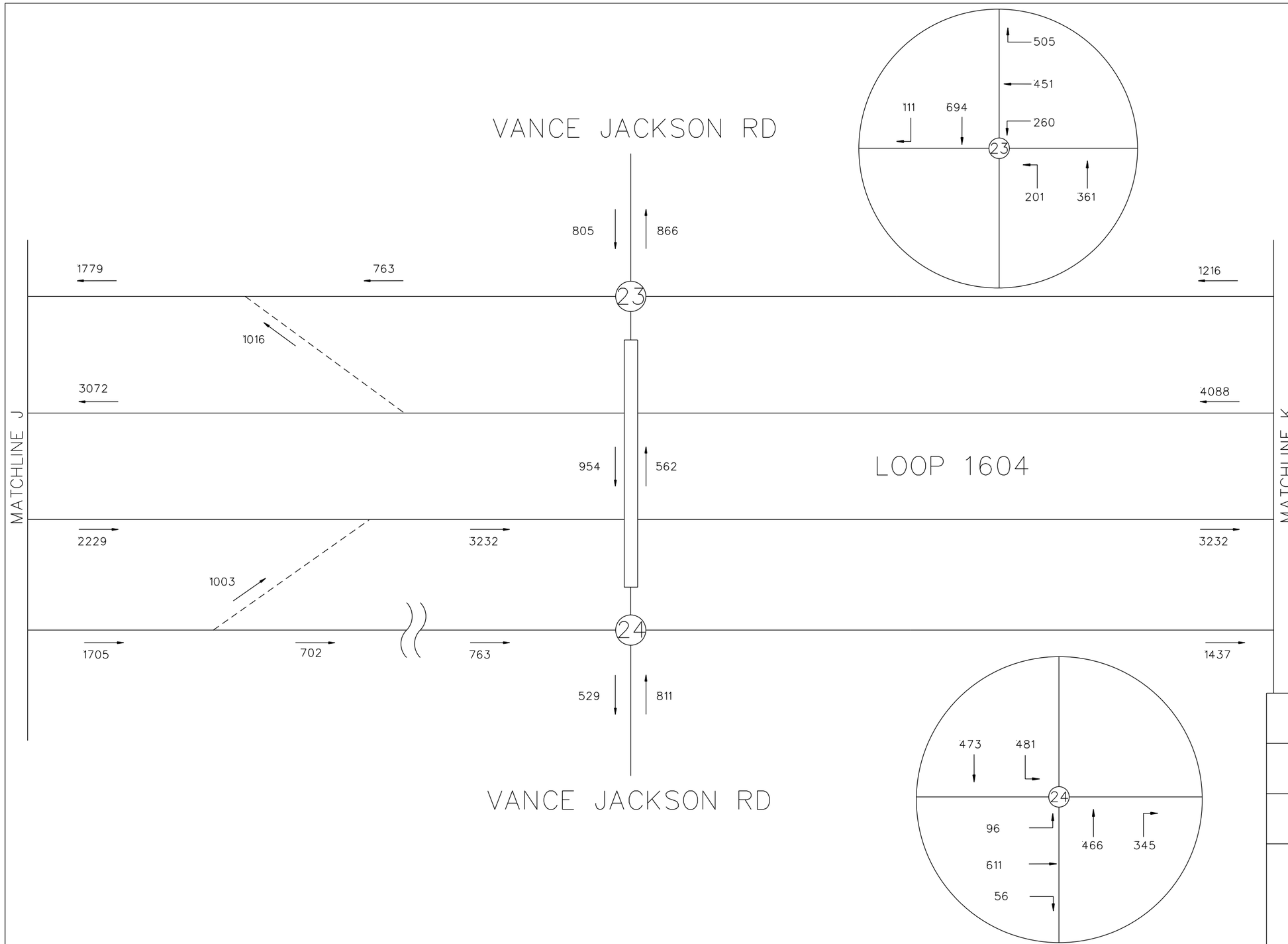

N.T.S.

LEGEND

→ = TRAVEL DIRECTION

XXXXX = YEAR 2018 PM PEAK TRAFFIC

INTERIM REVIEW

THIS DOCUMENT IS RELEASED FOR THE PURPOSE OF INTERIM REVIEW UNDER THE AUTHORITY OF

ANDREW J. BALLARD, PE 59027 JAN. 3, 2019

IT IS NOT TO BE USED FOR CONSTRUCTION PURPOSES.

© 2018

Texas Department of Transportation

TEDSI INFRASTRUCTURE GROUP
Consulting Engineers
1201 E. Expressway 83
Mission, Texas 78572
(956) 424-7898
TBPE F-1640

JACOBS®
JACOBS ENGINEERING GROUP INC. FIRM #2966

LOOP 1604
EXISTING PM PEAK TRAFFIC

SHEET 11 OF 34

DESIGN CK	FED.RD. DIV.NO.			HIGHWAY NO.
CHECK PK				LOOP 1604
	STATE	DISTRICT	COUNTY	SHEET NO.
GRAPHICS CC	TX	SAN ANTONIO	BEXAR	11
CHECK PK	CONTROL	SECTION	JOB	
	2452	01	068	

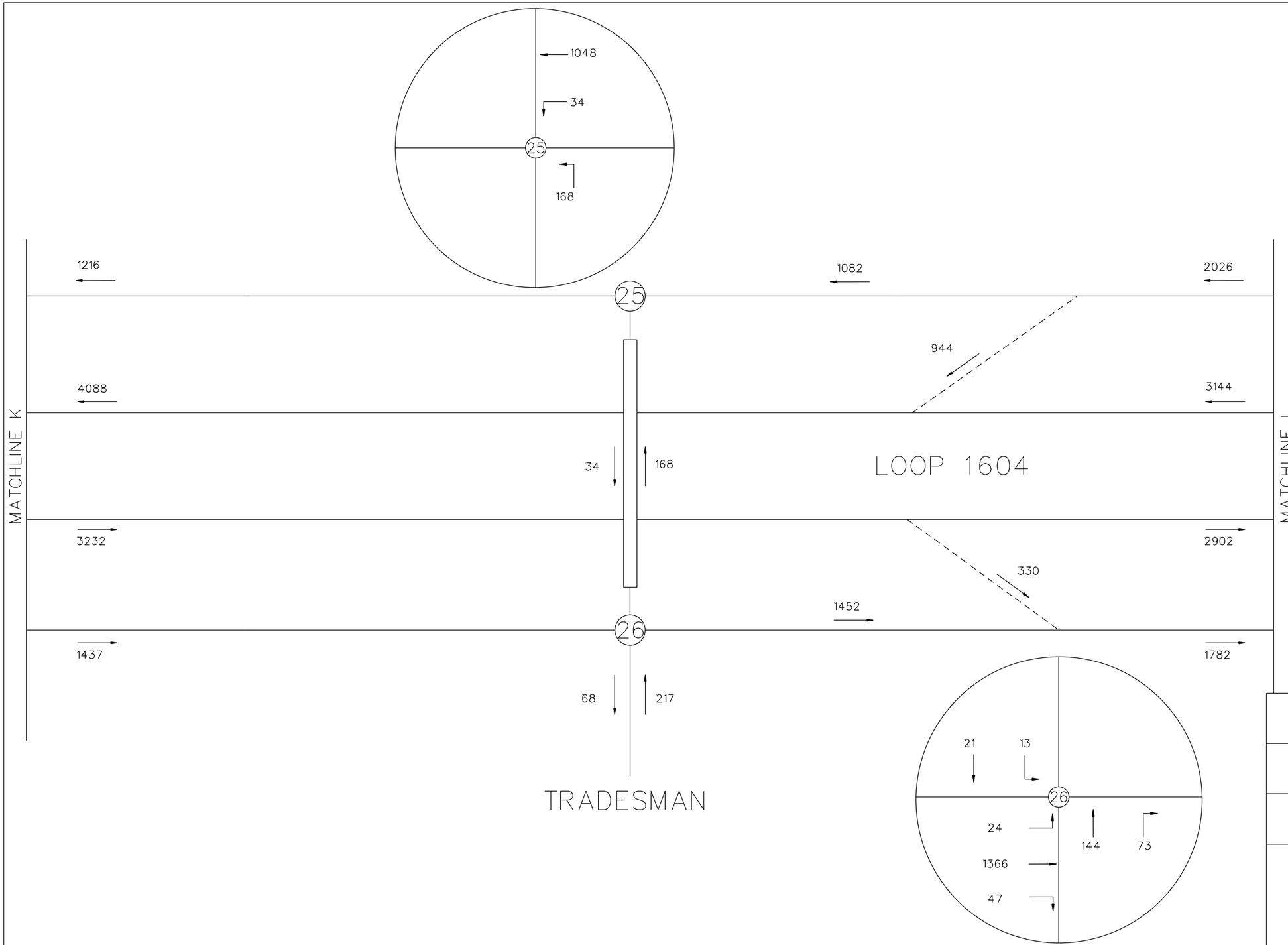

N.T.S.

LEGEND

→ = TRAVEL DIRECTION

XXXXX = YEAR 2018 PM PEAK TRAFFIC

INTERIM REVIEW

THIS DOCUMENT IS RELEASED FOR THE PURPOSE OF INTERIM REVIEW UNDER THE AUTHORITY OF

ANDREW J. BALLARD, PE 59027 JAN. 3, 2019

IT IS NOT TO BE USED FOR CONSTRUCTION PURPOSES.

© 2018

Texas Department of Transportation

TEDSI INFRASTRUCTURE GROUP
Consulting Engineers
1201 E. Expressway 83
Mission, Texas 78572
(956) 424-7898
TBPE F-1640

JACOBS
JACOBS ENGINEERING GROUP INC. FIRM #2966

LOOP 1604
EXISTING PM PEAK TRAFFIC

SHEET 12 OF 34

DESIGN CK	FED.RD. DIV.NO.			HIGHWAY NO.
CHECK PK				LOOP 1604
	STATE	DISTRICT	COUNTY	SHEET NO.
GRAPHICS CC	TX	SAN ANTONIO	BEXAR	12
	CONTROL	SECTION	JOB	
CHECK PK	2452	01	068	

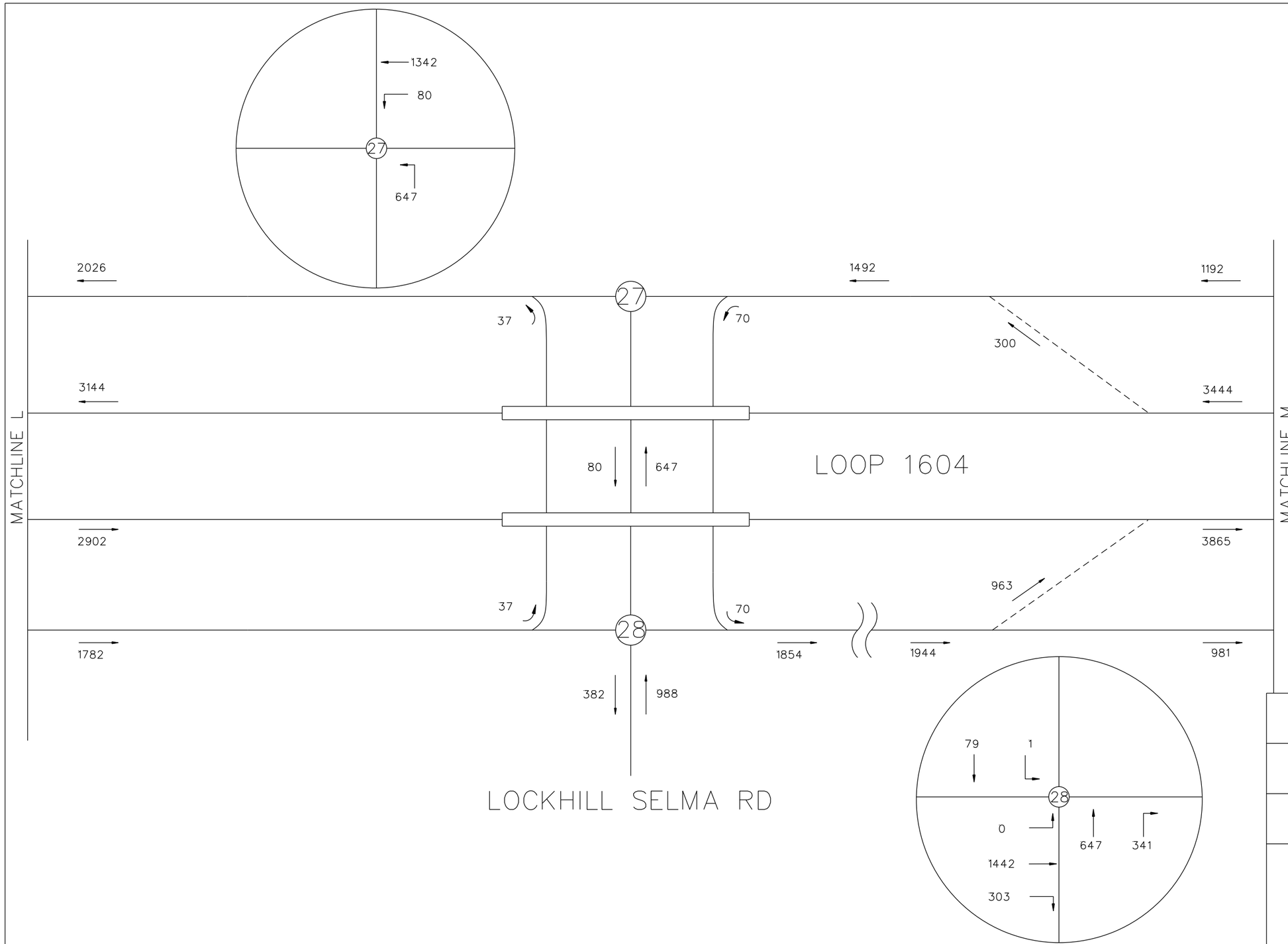

N.T.S.

LEGEND

→ = TRAVEL DIRECTION

XXXXX = YEAR 2018 PM PEAK TRAFFIC

INTERIM REVIEW

THIS DOCUMENT IS RELEASED FOR THE PURPOSE OF INTERIM REVIEW UNDER THE AUTHORITY OF

ANDREW J. BALLARD, PE 59027 JAN. 3, 2019

IT IS NOT TO BE USED FOR CONSTRUCTION PURPOSES.

© 2018

Texas Department of Transportation

TEDSI INFRASTRUCTURE GROUP
Consulting Engineers
1201 E. Expressway 83
Mission, Texas 78572
(956) 424-7898
TBPE F-1640

JACOBS
JACOBS ENGINEERING GROUP INC. FIRM #2966

LOOP 1604
EXISTING PM PEAK TRAFFIC

SHEET 13 OF 34

DESIGN CK	FED.RD. DIV.NO.			HIGHWAY NO.
CHECK PK				LOOP 1604
	STATE	DISTRICT	COUNTY	SHEET NO.
GRAPHICS CC	TX	SAN ANTONIO	BEXAR	13
CHECK PK	CONTROL	SECTION	JOB	
	2452	01	068	

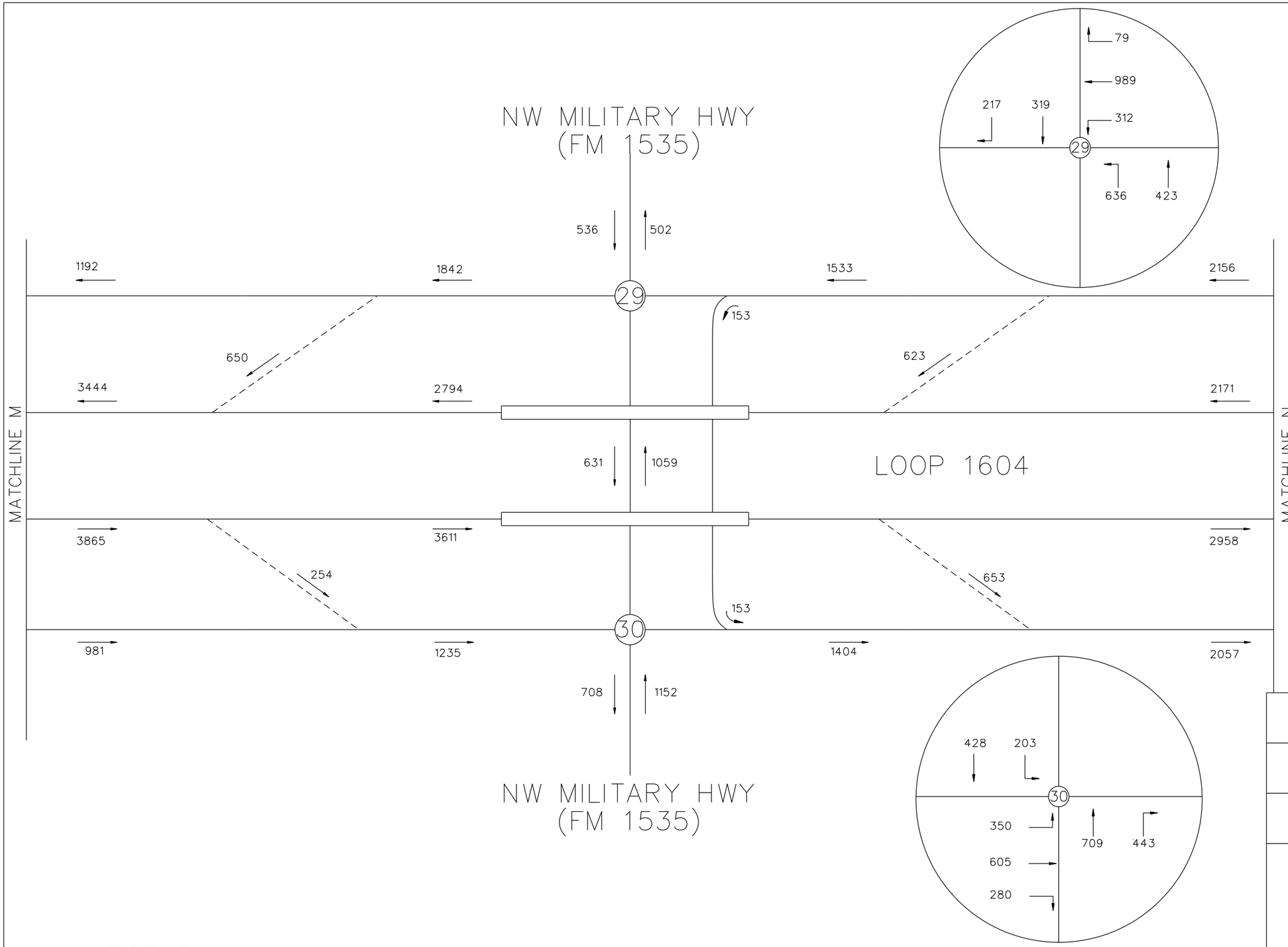

N.T.S.

LEGEND

→ = TRAVEL DIRECTION

XXXXX = YEAR 2018 PM PEAK TRAFFIC

INTERIM REVIEW

THIS DOCUMENT IS RELEASED FOR THE PURPOSE OF INTERIM REVIEW UNDER THE AUTHORITY OF

ANDREW J. BALLARD, PE 59027 JAN. 3, 2019

IT IS NOT TO BE USED FOR CONSTRUCTION PURPOSES.

© 2018

Texas Department of Transportation

TEDSI INFRASTRUCTURE GROUP
Consulting Engineers
1201 E. Expressway 83
Mission, Texas 78572
(956) 424-7898
TBPE F-1640

JACOBS
JACOBS ENGINEERING GROUP INC. FIRM #2966

LOOP 1604
EXISTING PM PEAK TRAFFIC

SHEET 14 OF 34

DESIGN CK	FED.RD. DIV.NO.			HIGHWAY NO.
CHECK PK				LOOP 1604
	STATE	DISTRICT	COUNTY	SHEET NO.
GRAPHICS CC	TX	SAN ANTONIO	BEXAR	14
CHECK PK	CONTROL	SECTION	JOB	
	2452	01	068	

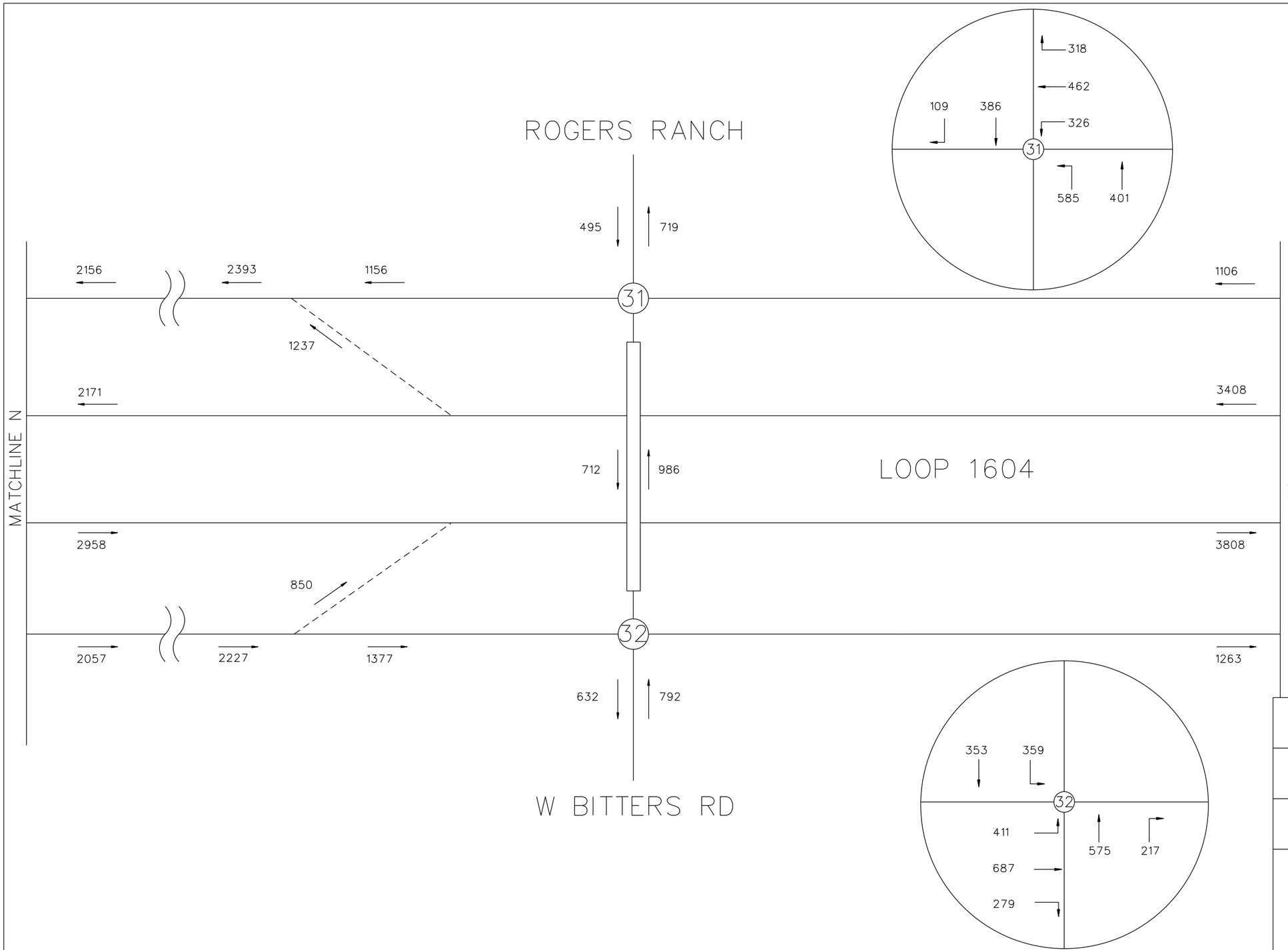

N.T.S.

LEGEND

→ = TRAVEL DIRECTION

XXXXX = YEAR 2018 PM PEAK TRAFFIC

INTERIM REVIEW

THIS DOCUMENT IS RELEASED FOR THE PURPOSE OF INTERIM REVIEW UNDER THE AUTHORITY OF

ANDREW J. BALLARD, PE 59027 JAN. 3, 2019

IT IS NOT TO BE USED FOR CONSTRUCTION PURPOSES.

© 2018

Texas Department of Transportation

TEDSI INFRASTRUCTURE GROUP
Consulting Engineers
1201 E. Expressway 83
Mission, Texas 78572
(956) 424-7898
TBPE F-1640

JACOBS®
JACOBS ENGINEERING GROUP INC. FIRM #2966

LOOP 1604
EXISTING PM PEAK TRAFFIC

SHEET 15 OF 34

DESIGN CK	FED.RD. DIV.NO.			HIGHWAY NO.
CHECK PK				LOOP 1604
	STATE	DISTRICT	COUNTY	SHEET NO.
GRAPHICS CC	TX	SAN ANTONIO	BEXAR	15
CHECK PK	CONTROL	SECTION	JOB	
	2452	01	068	

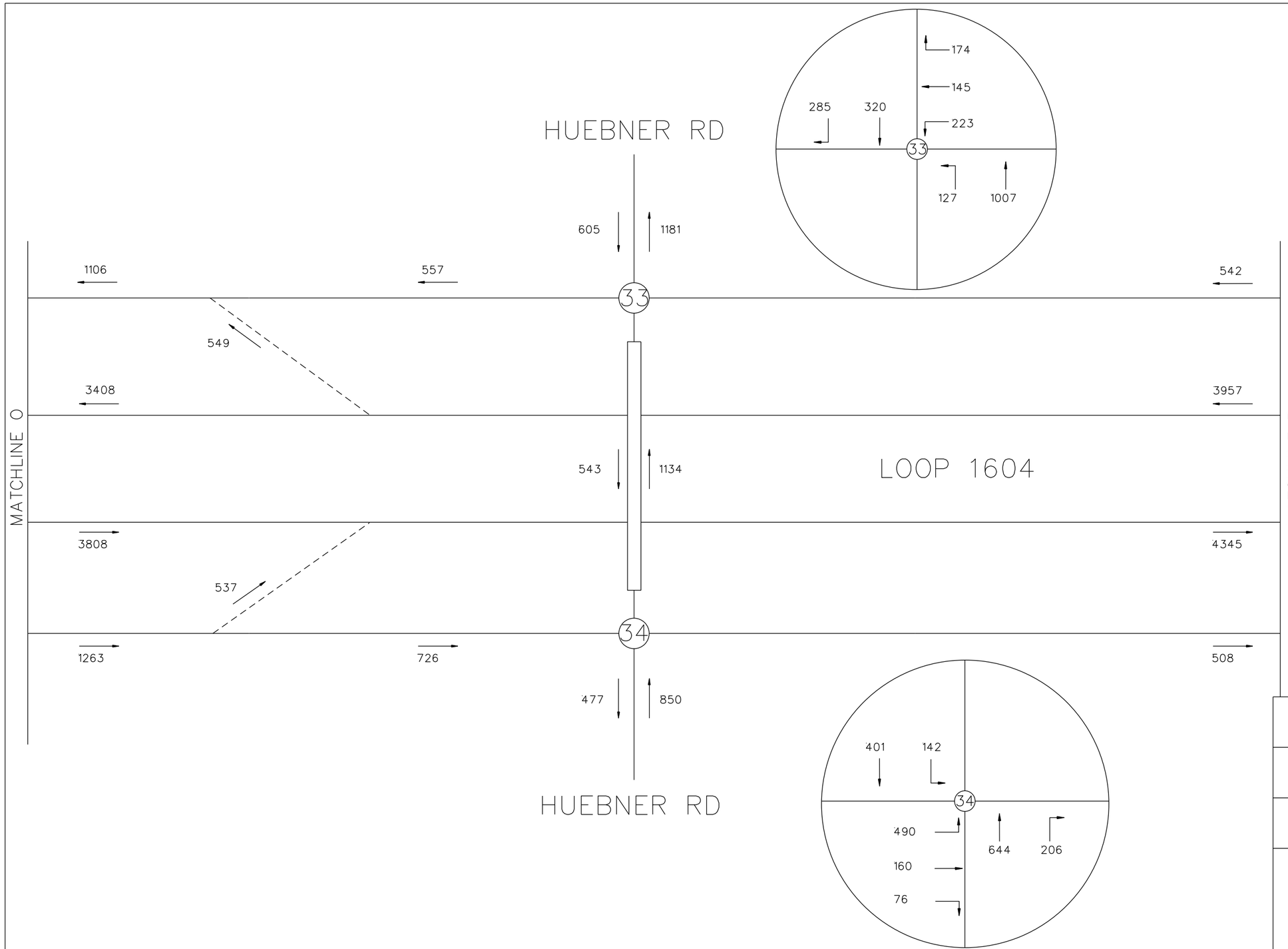

N.T.S.

LEGEND

→ = TRAVEL DIRECTION

XXXXX = YEAR 2018 PM PEAK TRAFFIC

INTERIM REVIEW

THIS DOCUMENT IS RELEASED FOR THE PURPOSE OF INTERIM REVIEW UNDER THE AUTHORITY OF

ANDREW J. BALLARD, PE 59027 JAN. 3, 2019

IT IS NOT TO BE USED FOR CONSTRUCTION PURPOSES.

© 2018

Texas Department of Transportation

TEDSI INFRASTRUCTURE GROUP
Consulting Engineers
1201 E. Expressway 83
Mission, Texas 78572
(956) 424-7898
TBPE F-1640

JACOBS
JACOBS ENGINEERING GROUP INC. FIRM #2966

LOOP 1604
EXISTING PM PEAK TRAFFIC

SHEET 16 OF 34

DESIGN CK	FED.RD. DIV.NO.			HIGHWAY NO.
CHECK PK				LOOP 1604
	STATE	DISTRICT	COUNTY	SHEET NO.
GRAPHICS CC	TX	SAN ANTONIO	BEXAR	16
CHECK PK	CONTROL	SECTION	JOB	
	2452	01	068	

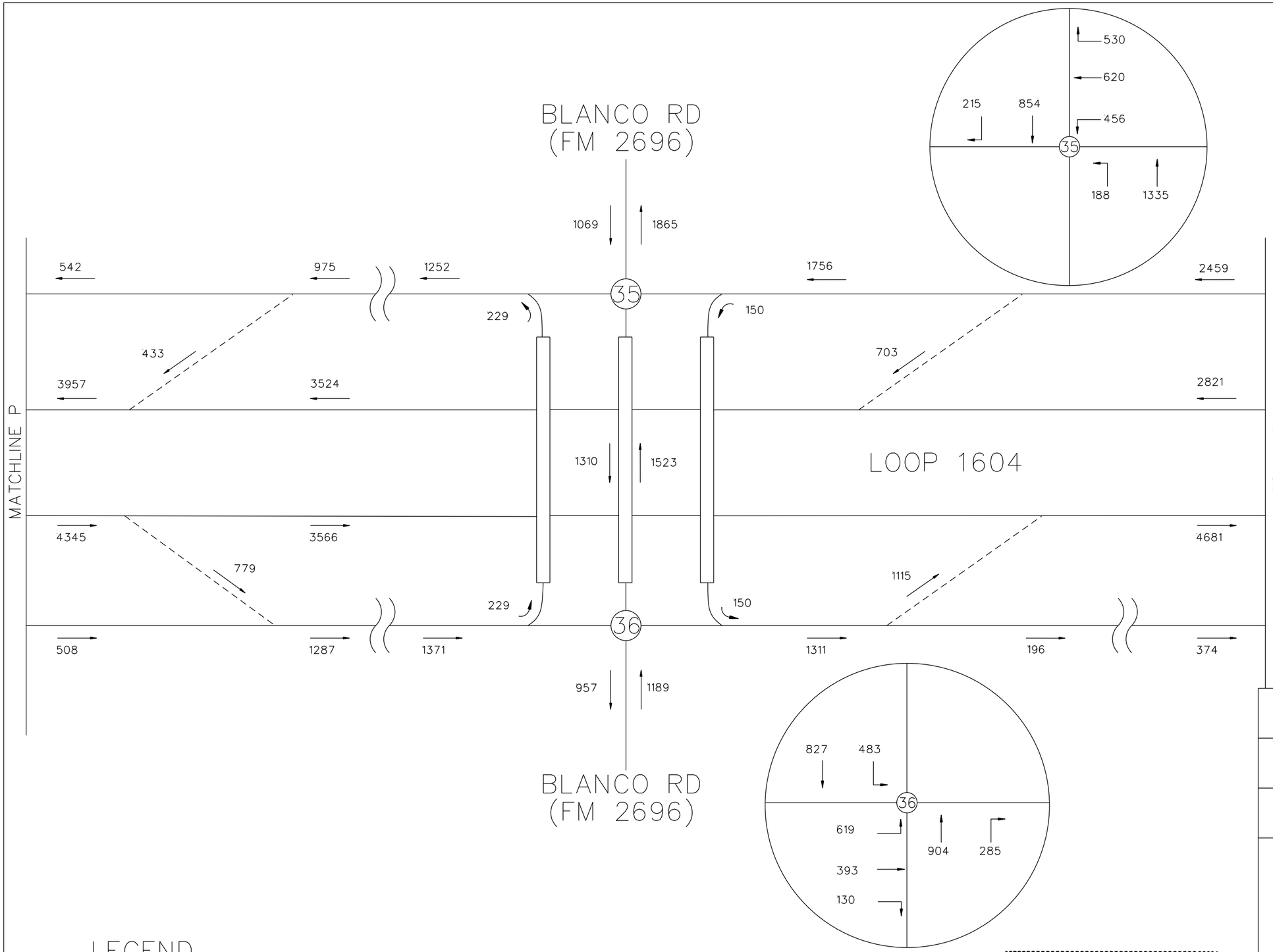

N.T.S.

LEGEND

→ = TRAVEL DIRECTION

XXXXX = YEAR 2018 PM PEAK TRAFFIC

INTERIM REVIEW

THIS DOCUMENT IS RELEASED FOR THE PURPOSE OF INTERIM REVIEW UNDER THE AUTHORITY OF

ANDREW J. BALLARD, PE 59027 JAN. 3, 2019

IT IS NOT TO BE USED FOR CONSTRUCTION PURPOSES.

© 2018

Texas Department of Transportation

TEDSI INFRASTRUCTURE GROUP
Consulting Engineers
1201 E. Expressway 83
Mission, Texas 78572
(956) 424-7898
TBPE F-1640

JACOBS
JACOBS ENGINEERING GROUP INC. FIRM •2966

LOOP 1604
EXISTING PM PEAK TRAFFIC

SHEET 17 OF 34

DESIGN CK	FED.RD. DIV.NO.			HIGHWAY NO.
CHECK PK				LOOP 1604
	STATE	DISTRICT	COUNTY	SHEET NO.
GRAPHICS CC	TX	SAN ANTONIO	BEXAR	17
CHECK PK	CONTROL	SECTION	JOB	
	2452	01	068	

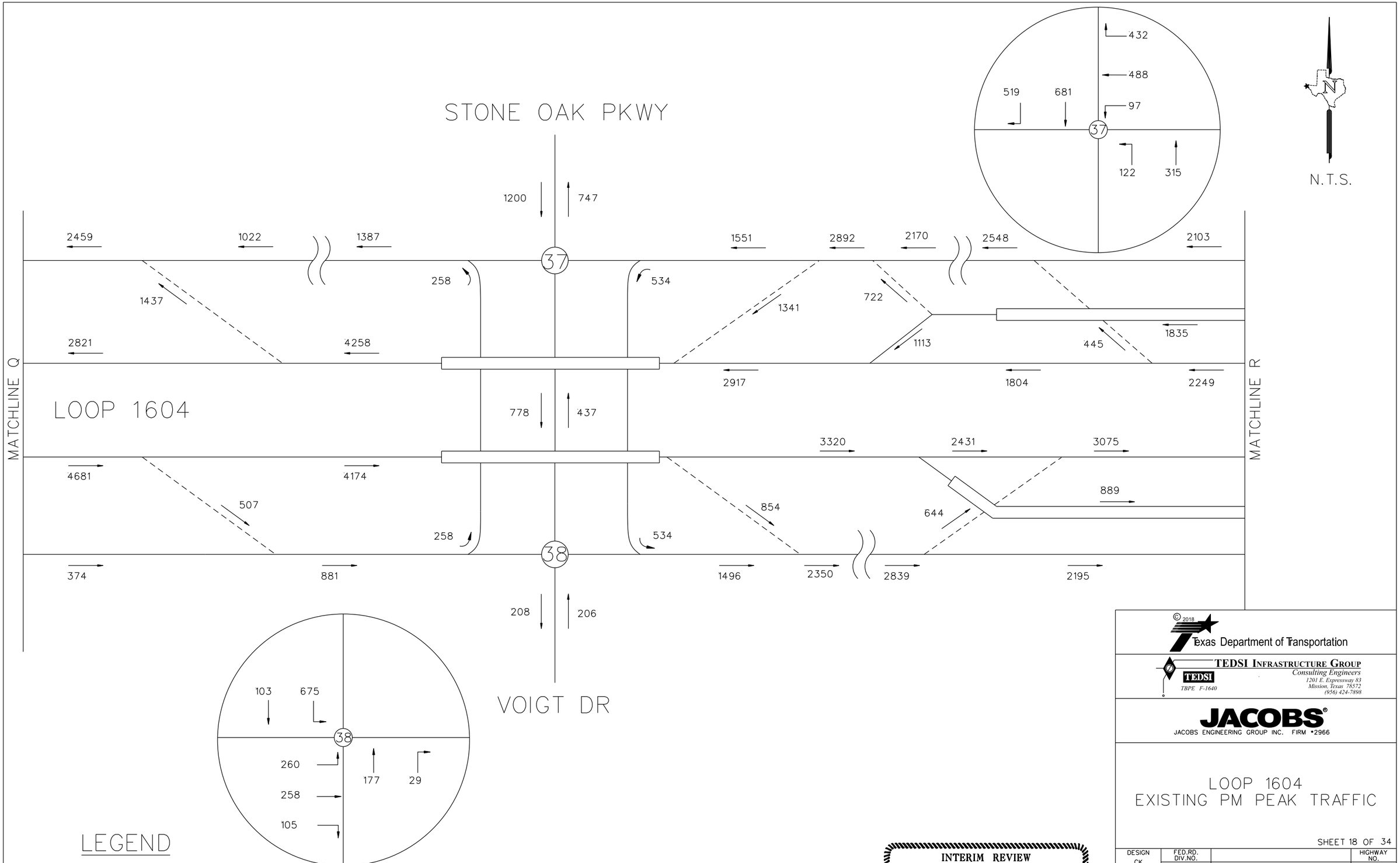

LEGEND

→ = TRAVEL DIRECTION

XXXXX = YEAR 2018 PM PEAK TRAFFIC

INTERIM REVIEW

THIS DOCUMENT IS RELEASED FOR THE PURPOSE OF INTERIM REVIEW UNDER THE AUTHORITY OF

ANDREW J. BALLARD, PE 59027 JAN. 3, 2019

IT IS NOT TO BE USED FOR CONSTRUCTION PURPOSES.

© 2018

Texas Department of Transportation

TEDSI INFRASTRUCTURE GROUP
Consulting Engineers
TBPE F-1640
1201 E. Expressway 83
Mission, Texas 78572
(956) 424-7898

JACOBS
JACOBS ENGINEERING GROUP INC. FIRM #2966

LOOP 1604
EXISTING PM PEAK TRAFFIC

SHEET 18 OF 34

DESIGN CK	FED.RD. DIV.NO.			HIGHWAY NO.
CHECK PK				LOOP 1604
	STATE	DISTRICT	COUNTY	SHEET NO.
GRAPHICS CC	TX	SAN ANTONIO	BEXAR	18
CHECK PK	CONTROL	SECTION	JOB	
	2452	01	068	

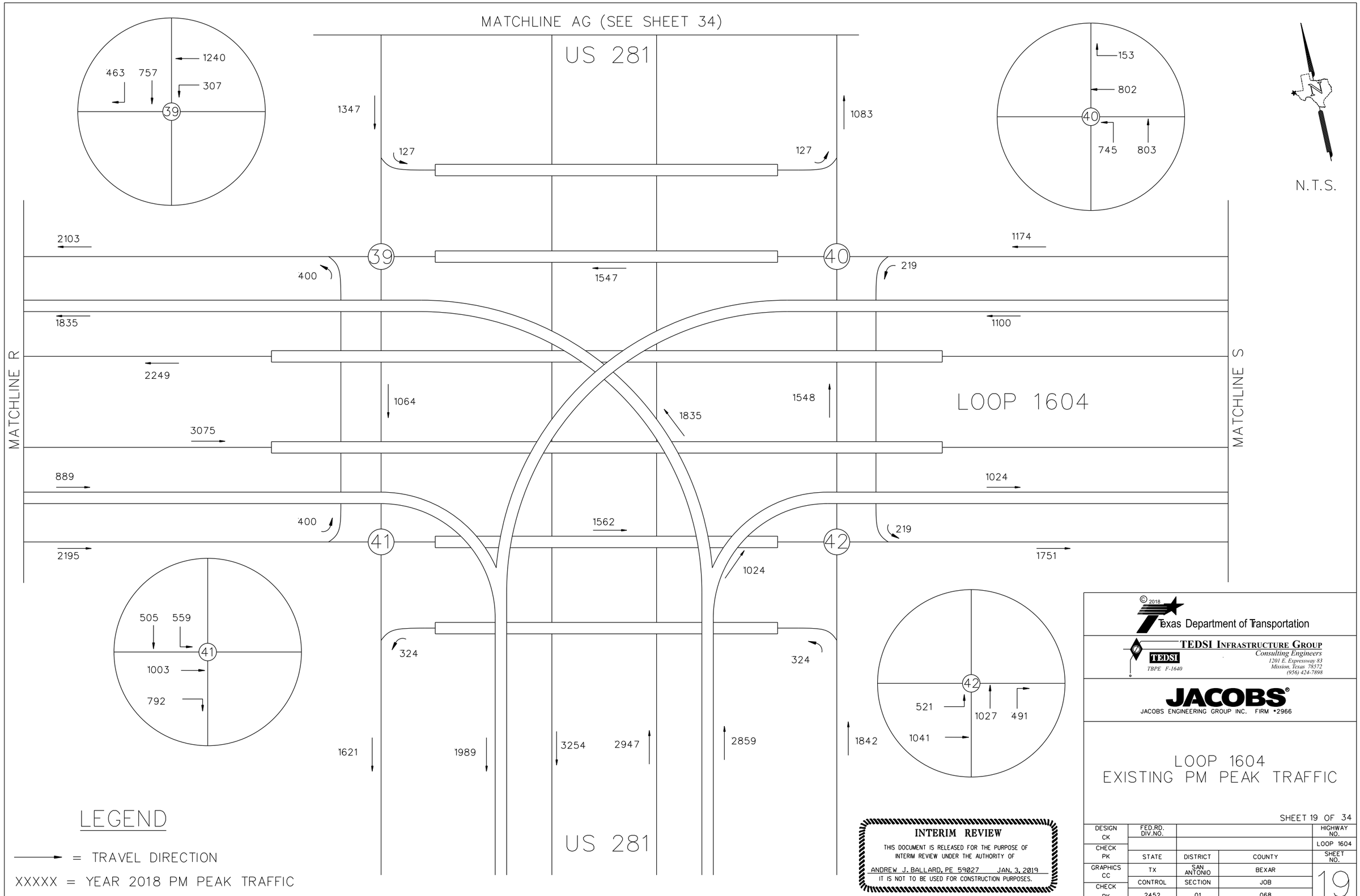
MATCHLINE AG (SEE SHEET 34)
US 281
1240
463
757
307
39
1347
127
1083
127
153
802
40
745
803
N.T.S.
2103
39
400
1547
40
219
1174
1835
1100
MATCHLINE R
2249
1064
1548
LOOP 1604
1835
MATCHLINE S
3075
889
1024
400
1562
41
42
219
2195
1751
1024
505
559
41
1003
792
324
324
42
521
1027
491
1041
1621
1989
3254
2947
2859
1842
US 281
LEGEND
= TRAVEL DIRECTION
XXXXX = YEAR 2018 PM PEAK TRAFFIC
INTERIM REVIEW
THIS DOCUMENT IS RELEASED FOR THE PURPOSE OF INTERIM REVIEW UNDER THE AUTHORITY OF
ANDREW J. BALLARD, PE 59027 JAN. 3, 2019
IT IS NOT TO BE USED FOR CONSTRUCTION PURPOSES.
© 2018
Texas Department of Transportation
TEDSI INFRASTRUCTURE GROUP
Consulting Engineers
1201 E. Expressway 83
Mission, Texas 78572
(956) 424-7898
TEDSI
TBPE F-1640
JACOBS
JACOBS ENGINEERING GROUP INC. FIRM #2966
LOOP 1604
EXISTING PM PEAK TRAFFIC
SHEET 19 OF 34
DESIGN CK
FED.RD. DIV.NO.
HIGHWAY NO.
LOOP 1604
CHECK PK
STATE
DISTRICT
COUNTY
SHEET NO.
GRAPHICS CC
TX
SAN ANTONIO
BEXAR
CONTROL
SECTION
JOB
CHECK PK
2452
01
068
19

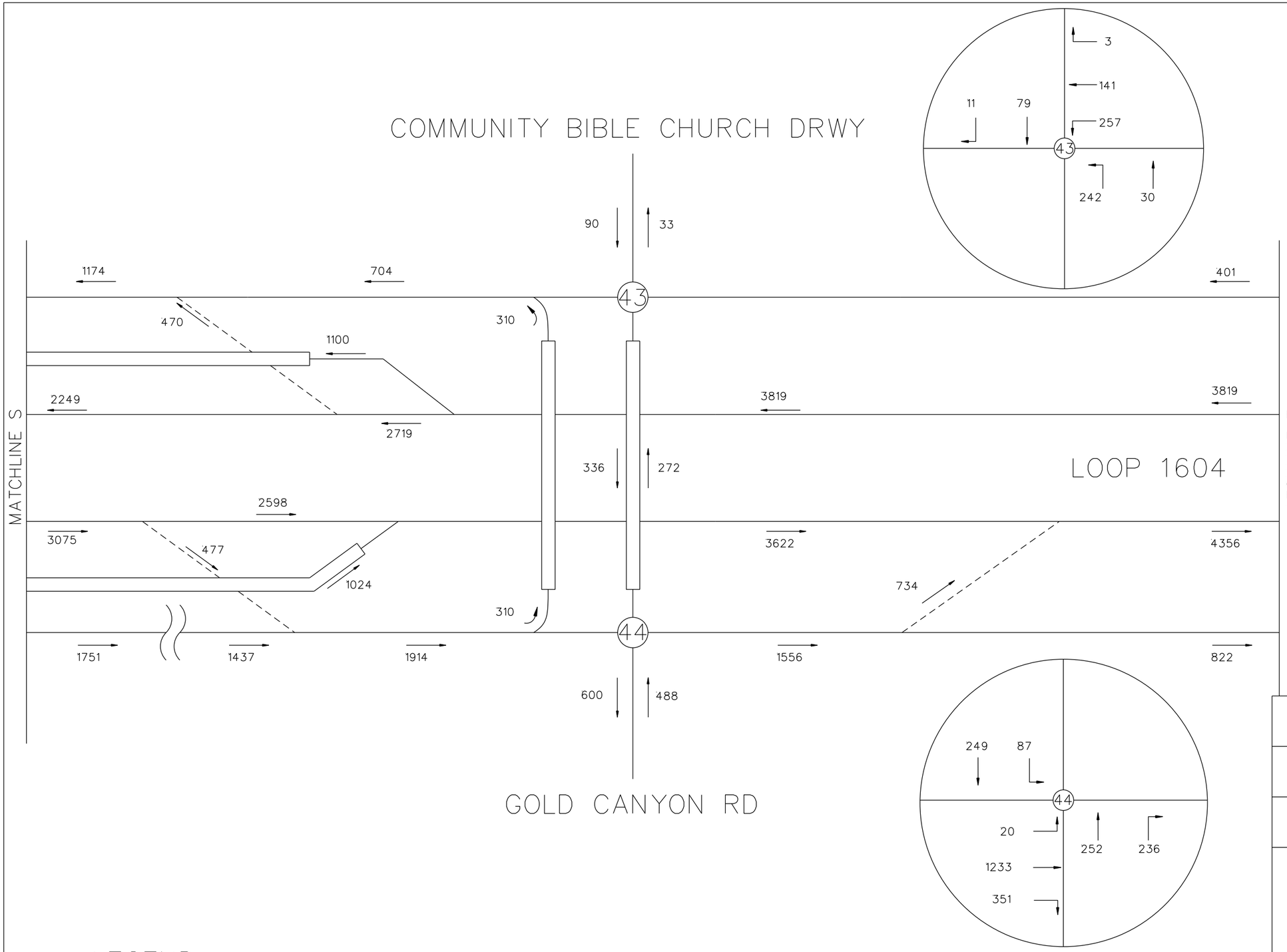

N.T.S.

LEGEND

→ = TRAVEL DIRECTION

XXXXX = YEAR 2018 PM PEAK TRAFFIC

INTERIM REVIEW

THIS DOCUMENT IS RELEASED FOR THE PURPOSE OF INTERIM REVIEW UNDER THE AUTHORITY OF

ANDREW J. BALLARD, PE 59027 JAN. 3, 2019

IT IS NOT TO BE USED FOR CONSTRUCTION PURPOSES.

© 2018

Texas Department of Transportation

TEDSI INFRASTRUCTURE GROUP
Consulting Engineers
1201 E. Expressway 83
Mission, Texas 78572
(956) 424-7898
TBPE F-1640

JACOBS
JACOBS ENGINEERING GROUP INC. FIRM #2966

LOOP 1604
EXISTING PM PEAK TRAFFIC

SHEET 20 OF 34

DESIGN CK	FED.RD. DIV.NO.			HIGHWAY NO.
CHECK PK				LOOP 1604
	STATE	DISTRICT	COUNTY	SHEET NO.
GRAPHICS CC	TX	SAN ANTONIO	BEXAR	20
	CONTROL	SECTION	JOB	
CHECK PK	2452	01	068	

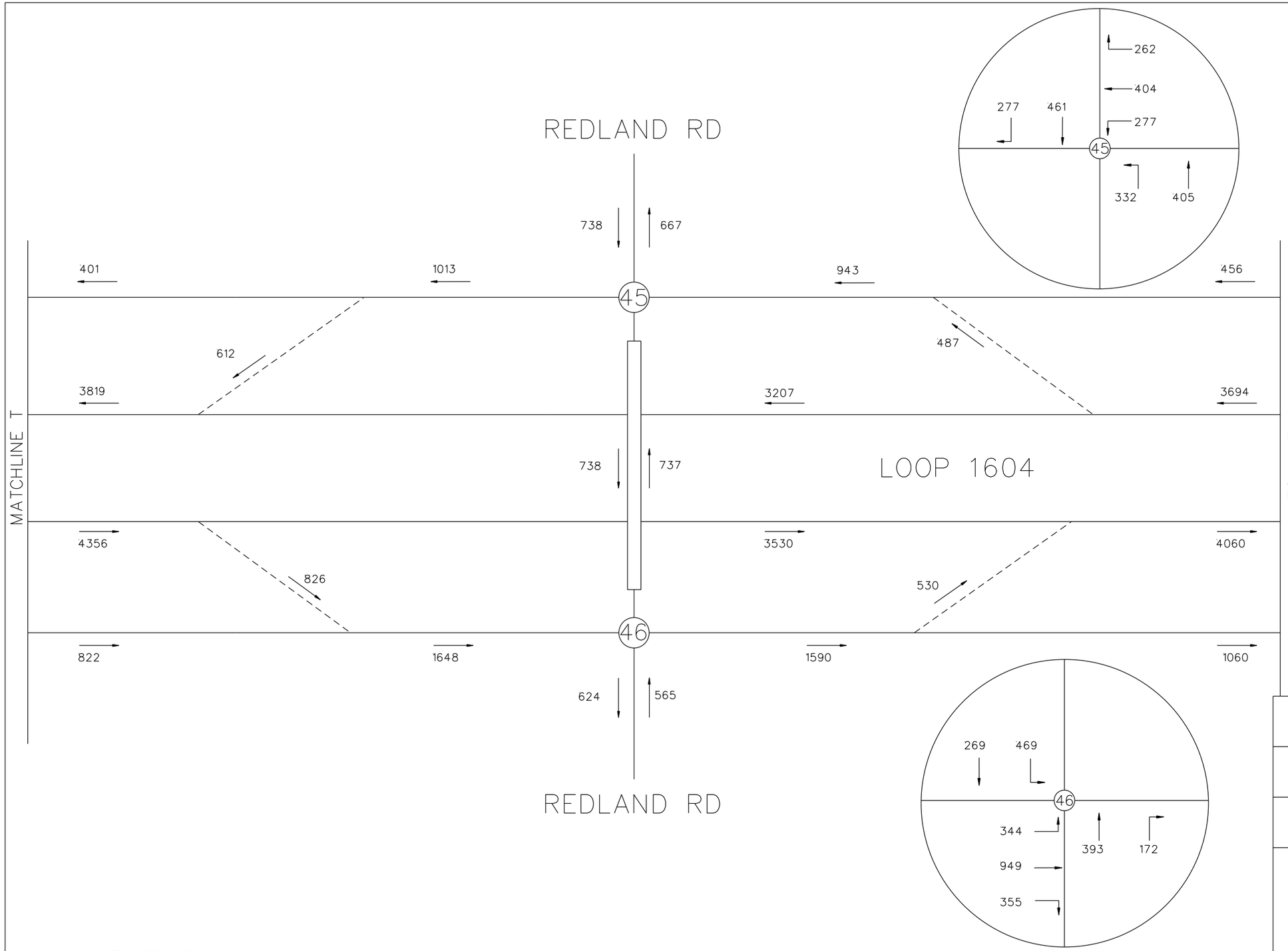

N.T.S.

LEGEND

→ = TRAVEL DIRECTION

XXXXX = YEAR 2018 PM PEAK TRAFFIC

INTERIM REVIEW

THIS DOCUMENT IS RELEASED FOR THE PURPOSE OF INTERIM REVIEW UNDER THE AUTHORITY OF

ANDREW J. BALLARD, PE 59027 JAN. 3, 2019

IT IS NOT TO BE USED FOR CONSTRUCTION PURPOSES.

© 2018

Texas Department of Transportation

TEDSI INFRASTRUCTURE GROUP
Consulting Engineers
1201 E. Expressway 83
Mission, Texas 78572
(956) 424-7898
TBPE F-1640

JACOBS
JACOBS ENGINEERING GROUP INC. FIRM #2966

LOOP 1604
EXISTING PM PEAK TRAFFIC

SHEET 21 OF 34

DESIGN CK	FED.RD. DIV.NO.			HIGHWAY NO.
CHECK PK				LOOP 1604
	STATE	DISTRICT	COUNTY	SHEET NO.
GRAPHICS CC	TX	SAN ANTONIO	BEXAR	21
	CONTROL	SECTION	JOB	
CHECK PK	2452	01	068	

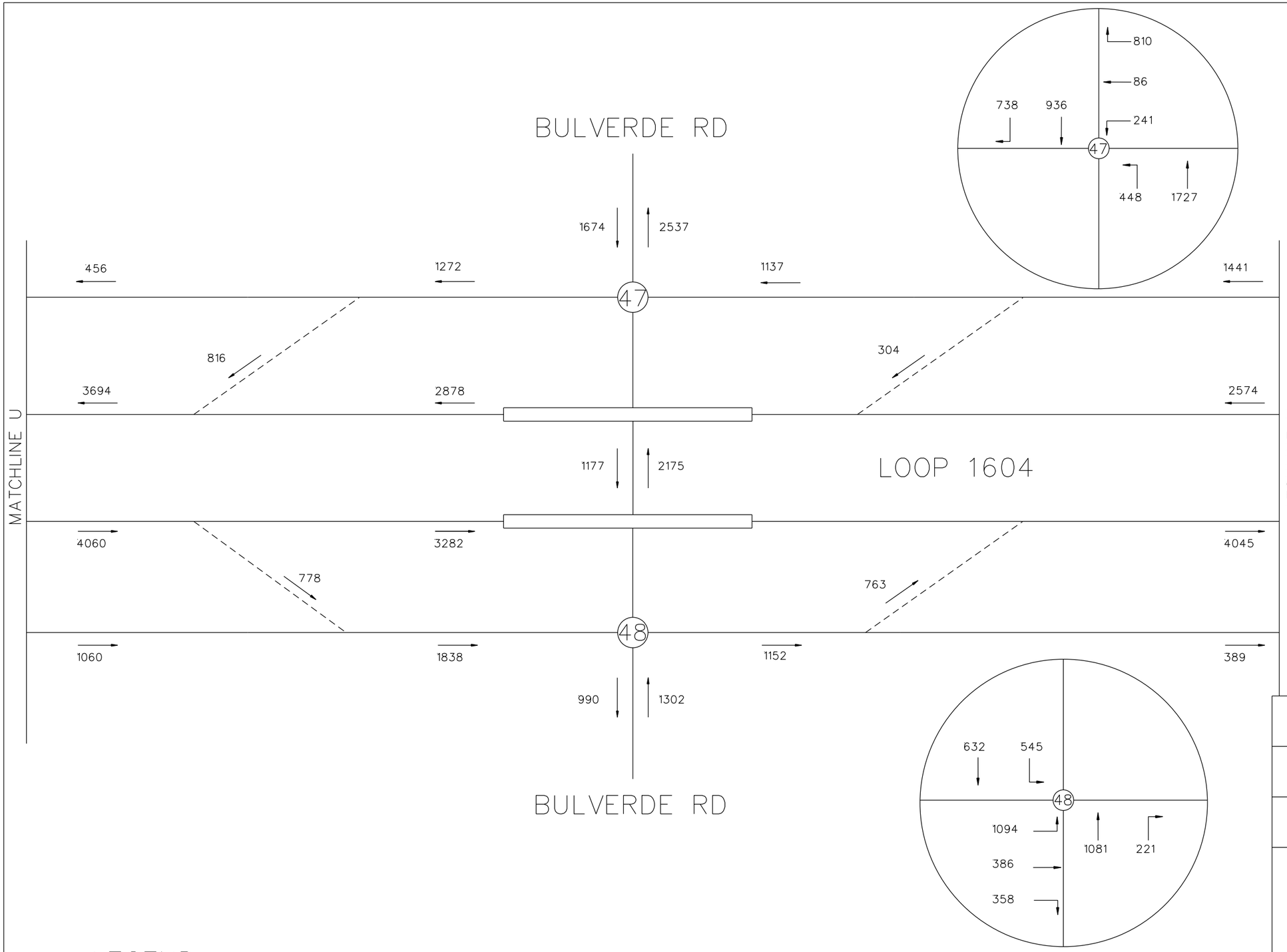

N.T.S.

LEGEND

→ = TRAVEL DIRECTION

XXXXX = YEAR 2018 PM PEAK TRAFFIC

INTERIM REVIEW

THIS DOCUMENT IS RELEASED FOR THE PURPOSE OF INTERIM REVIEW UNDER THE AUTHORITY OF

ANDREW J. BALLARD, PE 59027 JAN. 3, 2019

IT IS NOT TO BE USED FOR CONSTRUCTION PURPOSES.

© 2018

Texas Department of Transportation

TEDSI INFRASTRUCTURE GROUP
Consulting Engineers
1201 E. Expressway 83
Mission, Texas 78572
(956) 424-7898
TBPE F-1640

JACOBS
JACOBS ENGINEERING GROUP INC. FIRM •2966

LOOP 1604
EXISTING PM PEAK TRAFFIC

SHEET 22 OF 34

DESIGN CK	FED.RD. DIV.NO.			HIGHWAY NO.
				LOOP 1604
CHECK PK	STATE	DISTRICT	COUNTY	SHEET NO.
GRAPHICS CC	TX	SAN ANTONIO	BEXAR	22
CHECK PK	CONTROL	SECTION	JOB	
	2452	01	068	

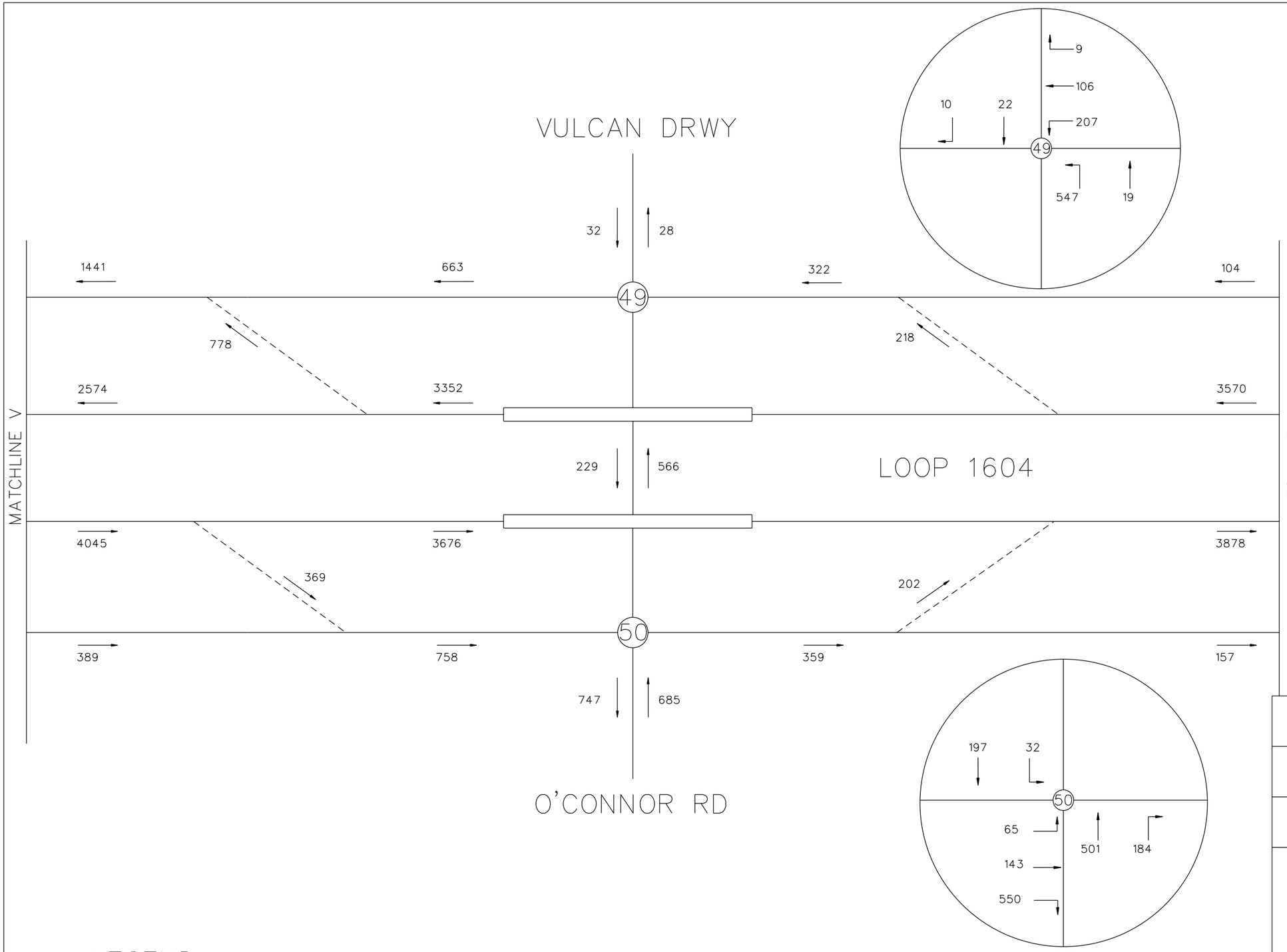

N.T.S.

LEGEND

→ = TRAVEL DIRECTION

XXXXX = YEAR 2018 PM PEAK TRAFFIC

INTERIM REVIEW

THIS DOCUMENT IS RELEASED FOR THE PURPOSE OF INTERIM REVIEW UNDER THE AUTHORITY OF

ANDREW J. BALLARD, PE 59027 JAN. 3, 2019

IT IS NOT TO BE USED FOR CONSTRUCTION PURPOSES.

© 2018

Texas Department of Transportation

TEDSI INFRASTRUCTURE GROUP
Consulting Engineers
1201 E. Expressway 83
Mission, Texas 78572
(956) 424-7898
TBPE F-1640

JACOBS
JACOBS ENGINEERING GROUP INC. FIRM •2966

LOOP 1604
EXISTING PM PEAK TRAFFIC

SHEET 23 OF 34

DESIGN CK	FED.RD. DIV.NO.			HIGHWAY NO.
CHECK PK				LOOP 1604
	STATE	DISTRICT	COUNTY	SHEET NO.
GRAPHICS CC	TX	SAN ANTONIO	BEXAR	23
CHECK PK	CONTROL	SECTION	JOB	
	2452	01	068	

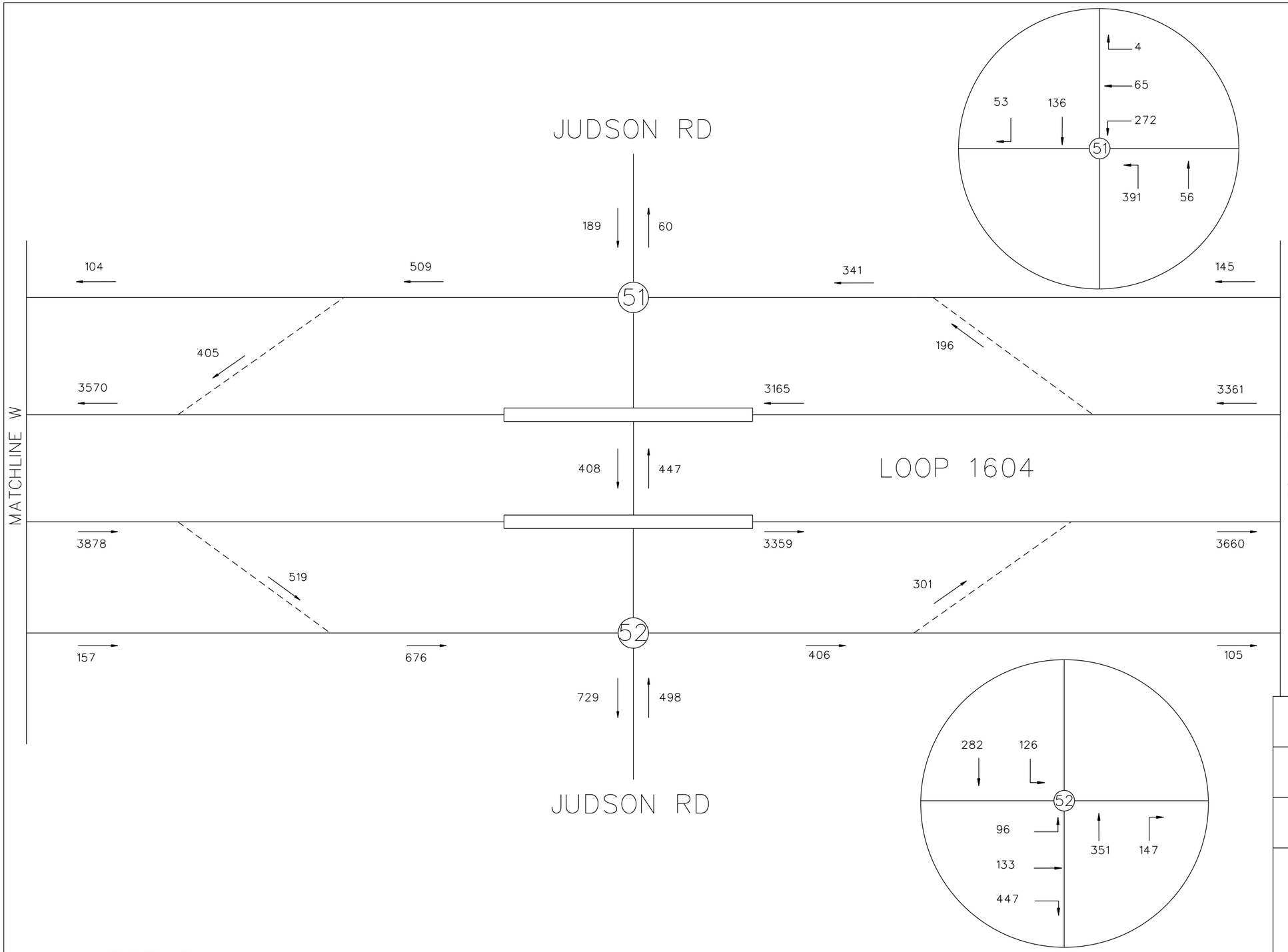

N.T.S.

LEGEND

→ = TRAVEL DIRECTION

XXXXX = YEAR 2018 PM PEAK TRAFFIC

INTERIM REVIEW

THIS DOCUMENT IS RELEASED FOR THE PURPOSE OF INTERIM REVIEW UNDER THE AUTHORITY OF

ANDREW J. BALLARD, PE 59027 JAN. 3, 2019

IT IS NOT TO BE USED FOR CONSTRUCTION PURPOSES.

© 2018

Texas Department of Transportation

TEDSI INFRASTRUCTURE GROUP
Consulting Engineers
1201 E. Expressway 83
Mission, Texas 78572
(956) 424-7898
TBPE F-1640

JACOBS
JACOBS ENGINEERING GROUP INC. FIRM #2966

LOOP 1604
EXISTING PM PEAK TRAFFIC

SHEET 24 OF 34

DESIGN CK	FED.RD. DIV.NO.			HIGHWAY NO.
				LOOP 1604
CHECK PK	STATE	DISTRICT	COUNTY	SHEET NO.
GRAPHICS CC	TX	SAN ANTONIO	BEXAR	24
CHECK PK	CONTROL	SECTION	JOB	
	2452	01	068	

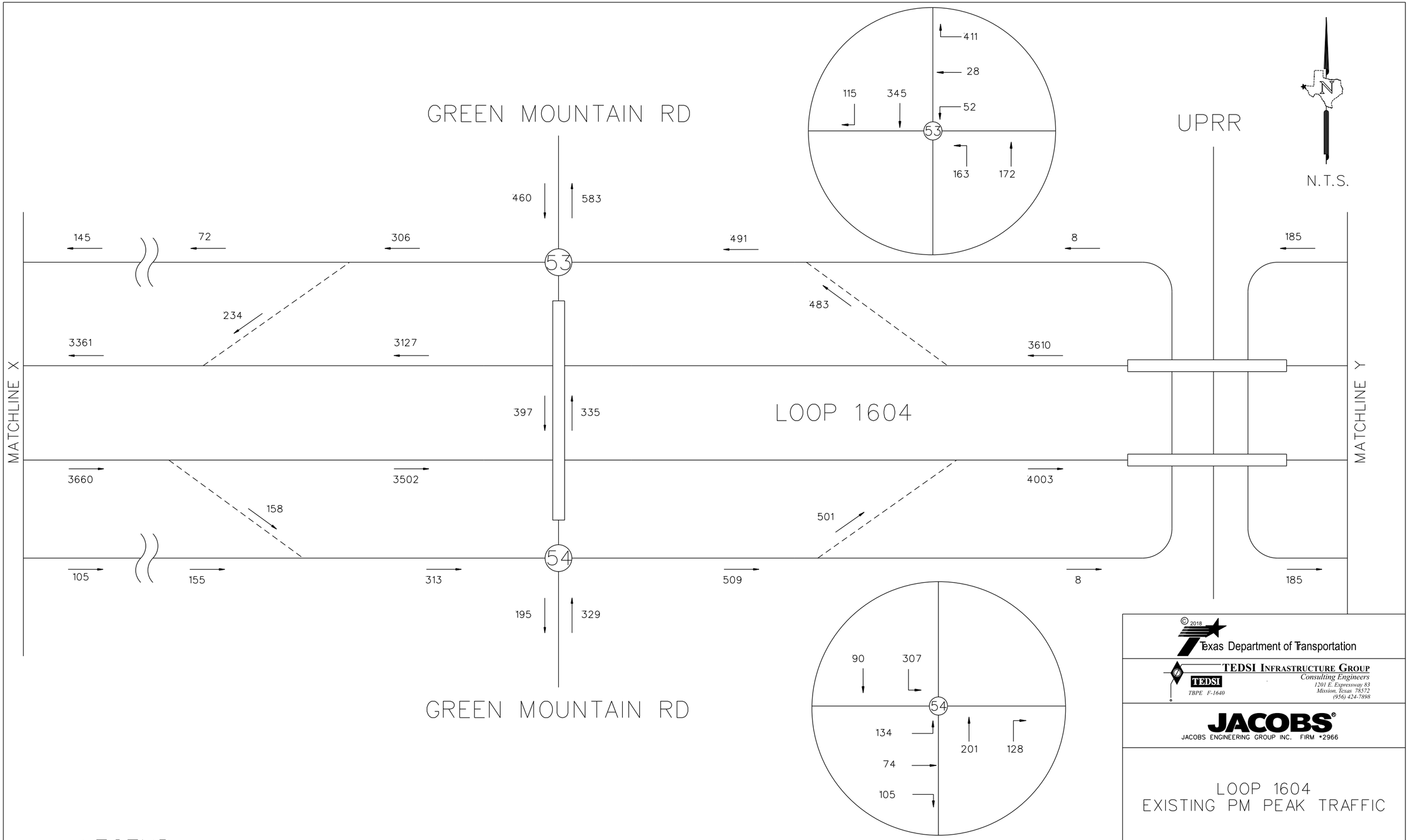

LEGEND

→ = TRAVEL DIRECTION

XXXXX = YEAR 2018 PM PEAK TRAFFIC

INTERIM REVIEW

THIS DOCUMENT IS RELEASED FOR THE PURPOSE OF INTERIM REVIEW UNDER THE AUTHORITY OF

ANDREW J. BALLARD, PE 59027 JAN. 3, 2019

IT IS NOT TO BE USED FOR CONSTRUCTION PURPOSES.

© 2018

Texas Department of Transportation

TEDSI INFRASTRUCTURE GROUP
Consulting Engineers
1201 E. Expressway 83
Mission, Texas 78572
(956) 424-7898
TBPE F-1640

JACOBS
JACOBS ENGINEERING GROUP INC. FIRM •2966

LOOP 1604
EXISTING PM PEAK TRAFFIC

SHEET 25 OF 34

DESIGN CK	FED.RD. DIV.NO.			HIGHWAY NO.
				LOOP 1604
CHECK PK	STATE	DISTRICT	COUNTY	SHEET NO.
GRAPHICS CC	TX	SAN ANTONIO	BEXAR	25
	CONTROL	SECTION	JOB	
CHECK PK	2452	01	068	

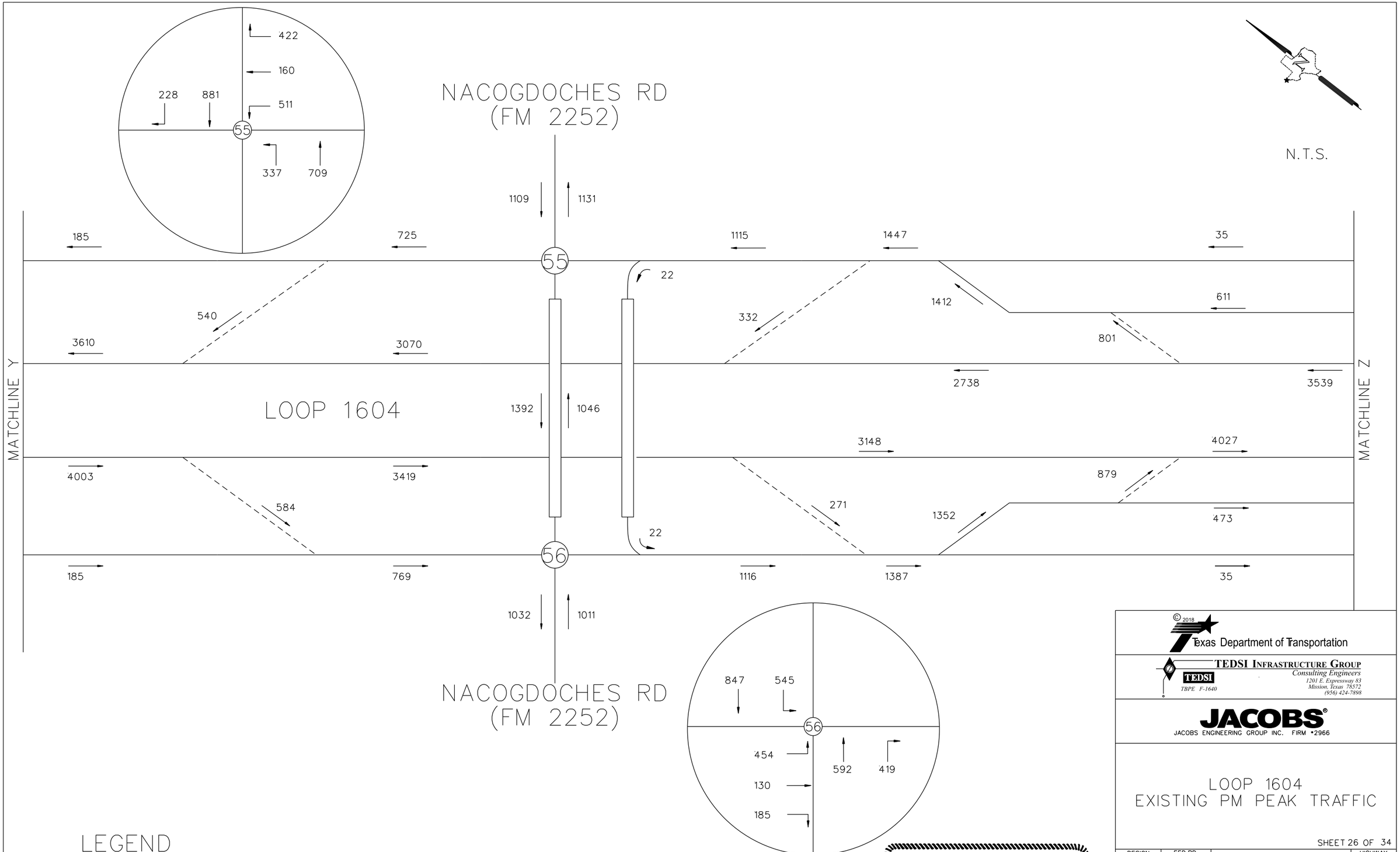

LEGEND

→ = TRAVEL DIRECTION

XXXXX = YEAR 2018 PM PEAK TRAFFIC

INTERIM REVIEW

THIS DOCUMENT IS RELEASED FOR THE PURPOSE OF INTERIM REVIEW UNDER THE AUTHORITY OF

ANDREW J. BALLARD, PE 59027 JAN. 3, 2019

IT IS NOT TO BE USED FOR CONSTRUCTION PURPOSES.

© 2018

Texas Department of Transportation

TEDSI INFRASTRUCTURE GROUP
Consulting Engineers
1201 E. Expressway 83
Mission, Texas 78572
(956) 424-7898
TBPE F-1640

JACOBS®
JACOBS ENGINEERING GROUP INC. FIRM #2966

LOOP 1604
EXISTING PM PEAK TRAFFIC

SHEET 26 OF 34

DESIGN	FED.RD. DIV.NO.			HIGHWAY NO.
CK				LOOP 1604
CHECK PK	STATE	DISTRICT	COUNTY	SHEET NO.
GRAPHICS CC	TX	SAN ANTONIO	BEXAR	26
	CONTROL	SECTION	JOB	
CHECK PK	2452	01	068	

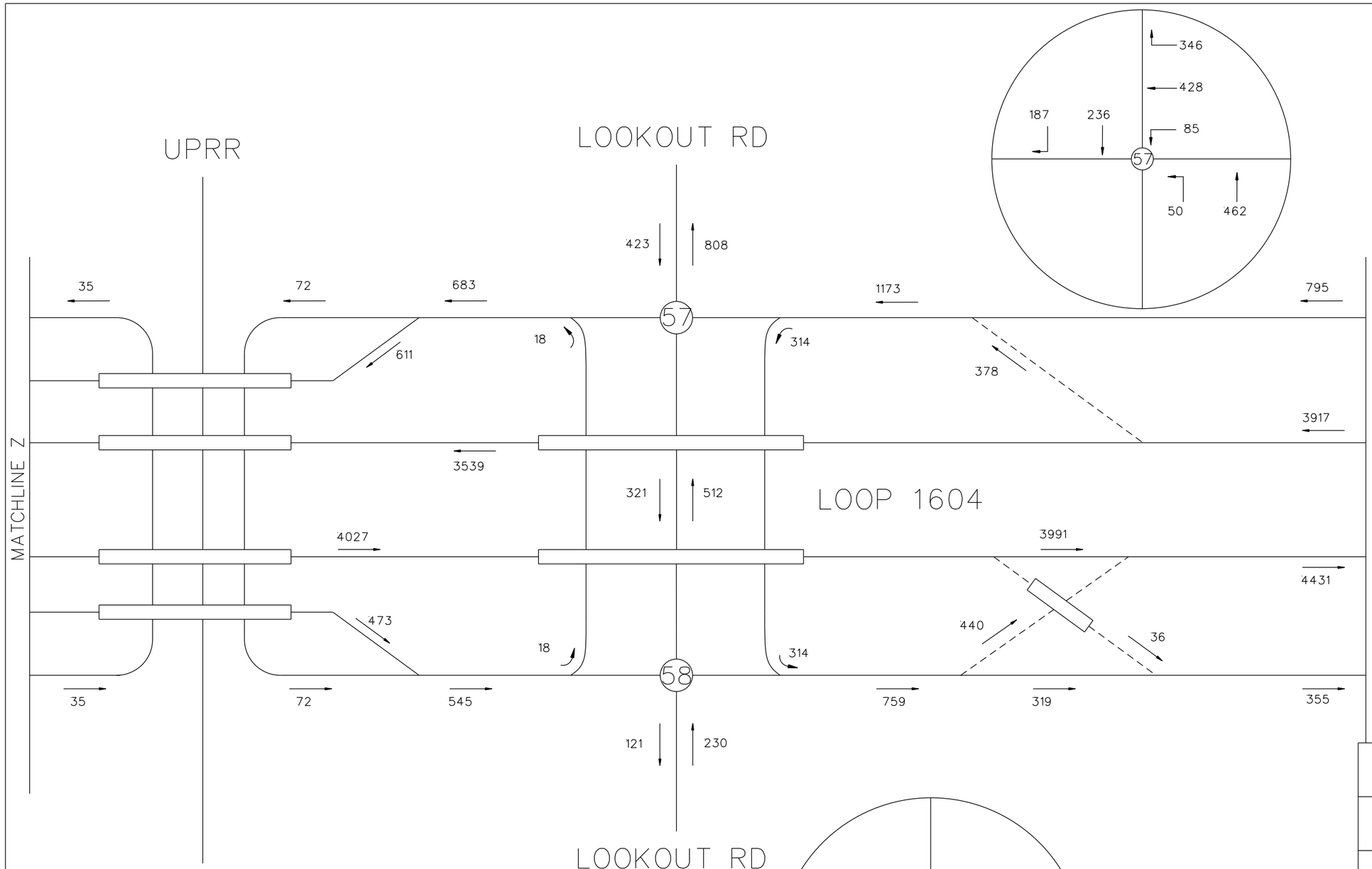

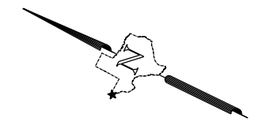

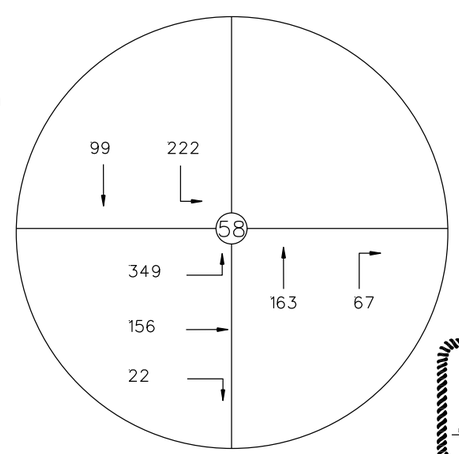

LEGEND

→ = TRAVEL DIRECTION

XXXXX = YEAR 2018 PM PEAK TRAFFIC

INTERIM REVIEW

THIS DOCUMENT IS RELEASED FOR THE PURPOSE OF INTERIM REVIEW UNDER THE AUTHORITY OF

ANDREW J. BALLARD, PE 59027 JAN. 3, 2019

IT IS NOT TO BE USED FOR CONSTRUCTION PURPOSES.

© 2018

Texas Department of Transportation

TEDSI INFRASTRUCTURE GROUP
Consulting Engineers
1201 E. Expressway 83
Mission, Texas 78572
(956) 424-7898
TBPE F-1640

JACOBS
JACOBS ENGINEERING GROUP INC. FIRM #2966

LOOP 1604
EXISTING PM PEAK TRAFFIC

SHEET 27 OF 34

DESIGN CK	FED.RD. DIV.NO.			HIGHWAY NO.
CHECK PK				LOOP 1604
	STATE	DISTRICT	COUNTY	SHEET NO.
GRAPHICS CC	TX	SAN ANTONIO	BEXAR	27
CHECK PK	CONTROL	SECTION	JOB	
	2452	01	068	

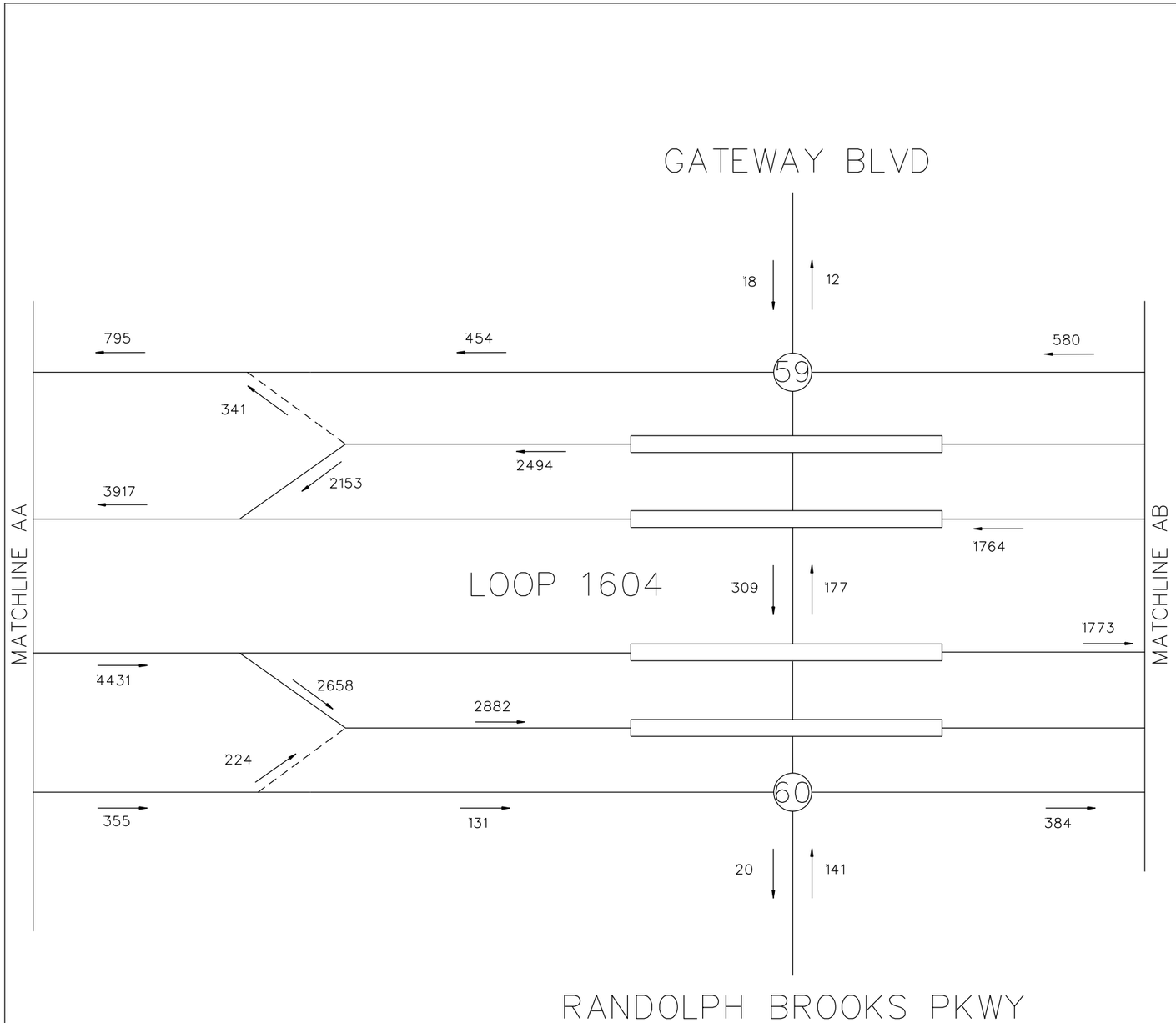

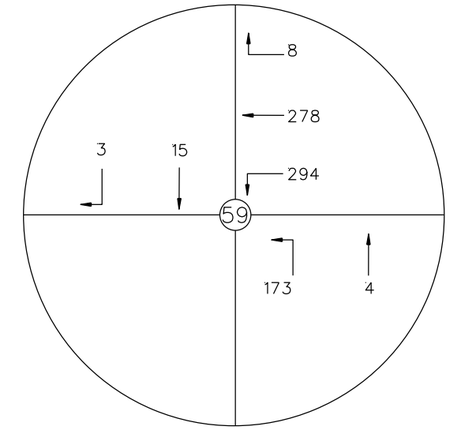

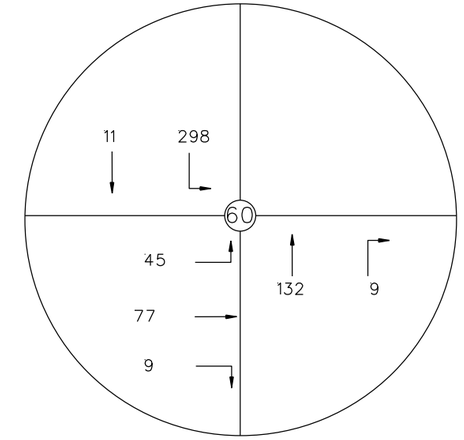

N.T.S.

LEGEND

→ = TRAVEL DIRECTION

XXXXX = YEAR 2018 PM PEAK TRAFFIC

INTERIM REVIEW

THIS DOCUMENT IS RELEASED FOR THE PURPOSE OF INTERIM REVIEW UNDER THE AUTHORITY OF

ANDREW J. BALLARD, PE 59027 JAN. 3, 2019

IT IS NOT TO BE USED FOR CONSTRUCTION PURPOSES.

© 2018

Texas Department of Transportation

TEDSI INFRASTRUCTURE GROUP
Consulting Engineers
1201 E. Expressway 83
Mission, Texas 78572
(956) 424-7898
TBPE F-1640

JACOBS
JACOBS ENGINEERING GROUP INC. FIRM #2966

LOOP 1604
EXISTING PM PEAK TRAFFIC

SHEET 28 OF 34

DESIGN CK	FED.RD. DIV.NO.			HIGHWAY NO.
CHECK PK				LOOP 1604
	STATE	DISTRICT	COUNTY	SHEET NO.
GRAPHICS CC	TX	SAN ANTONIO	BEXAR	28
	CONTROL	SECTION	JOB	
CHECK PK	2452	01	068	

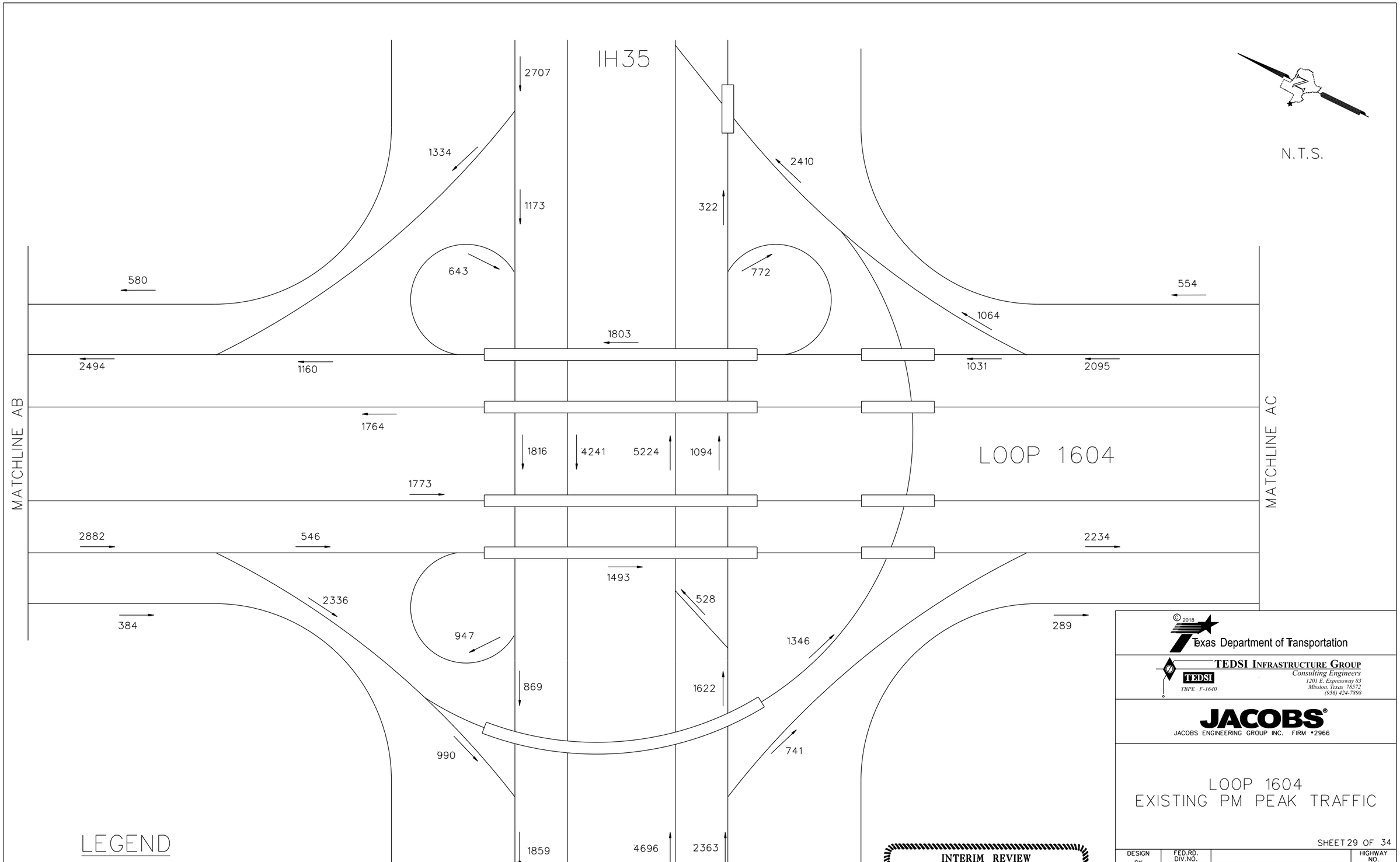

INTERIM REVIEW

THIS DOCUMENT IS RELEASED FOR THE PURPOSE OF INTERIM REVIEW UNDER THE AUTHORITY OF

ANDREW J. BALLARD, PE 59027 JAN. 3, 2019

IT IS NOT TO BE USED FOR CONSTRUCTION PURPOSES.

© 2018

Texas Department of Transportation

TEDSI INFRASTRUCTURE GROUP
Consulting Engineers
TBPE F-1640
1201 E. Expressway 83
Mission, Texas 78572
(956) 424-7898

JACOBS
JACOBS ENGINEERING GROUP INC. FIRM #2966

LOOP 1604
EXISTING PM PEAK TRAFFIC

SHEET 29 OF 34

DESIGN CK	FED.RD. DIV.NO.			HIGHWAY NO.
				LOOP 1604
CHECK PK	STATE	DISTRICT	COUNTY	SHEET NO.
GRAPHICS CC	TX	SAN ANTONIO	BEXAR	29
	CONTROL	SECTION	JOB	
CHECK PK	2452	01	068	

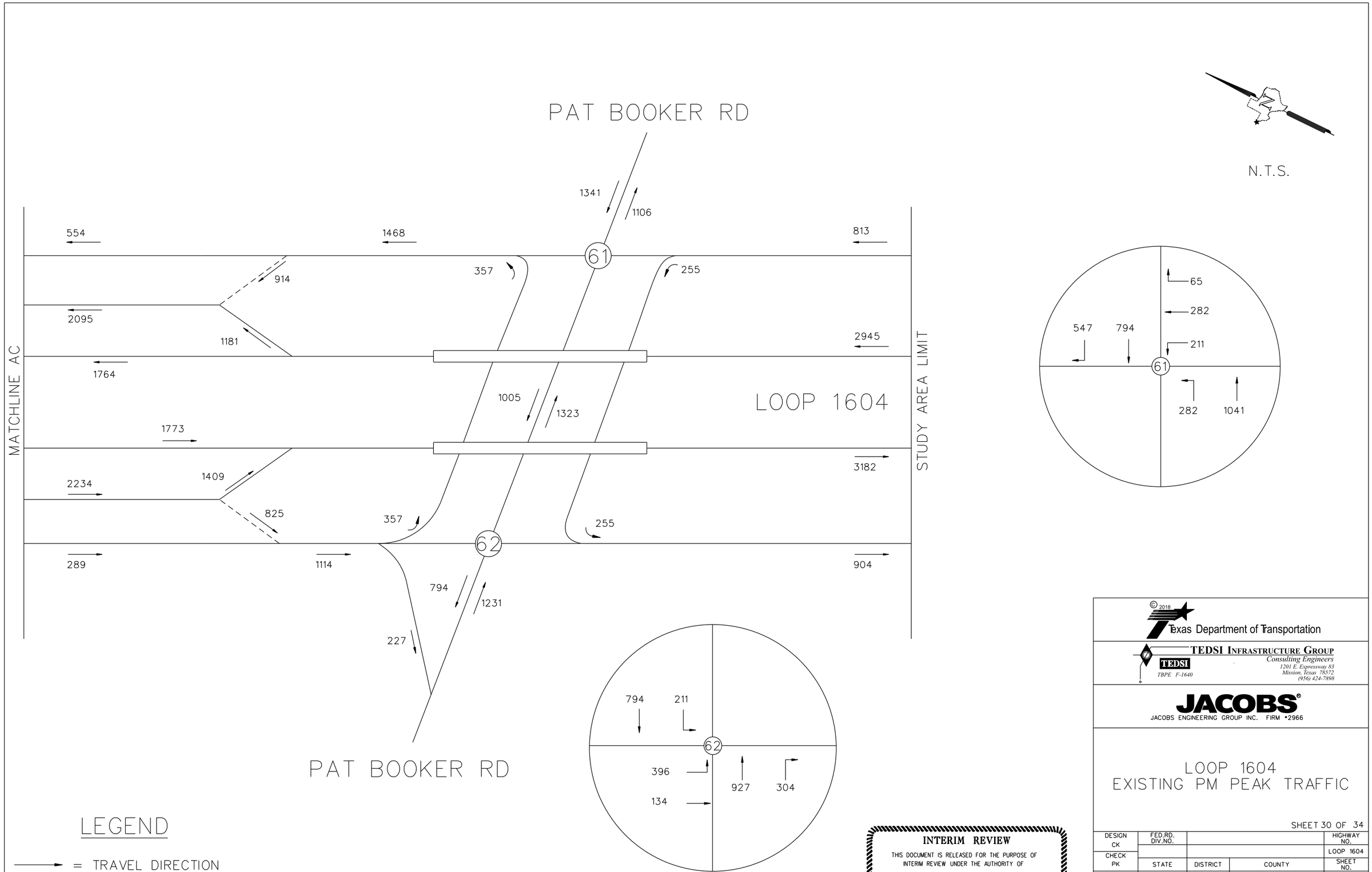
PAT BOOKER RD
N.T.S.
1341
1106
554
1468
813
61
357
255
914
2095
1181
2945
1764
MATCHLINE AC
STUDY AREA LIMIT
1005
1323
LOOP 1604
1773
3182
1409
2234
825
357
255
62
289
1114
904
794
1231
227
PAT BOOKER RD
65
282
547
794
211
61
282
1041
794
211
62
396
927
304
134
LEGEND
= TRAVEL DIRECTION
XXXXX = YEAR 2018 PM PEAK TRAFFIC
INTERIM REVIEW
THIS DOCUMENT IS RELEASED FOR THE PURPOSE OF INTERIM REVIEW UNDER THE AUTHORITY OF
ANDREW J. BALLARD, PE 59027 JAN. 3, 2019
IT IS NOT TO BE USED FOR CONSTRUCTION PURPOSES.
© 2018
Texas Department of Transportation
TEDSI INFRASTRUCTURE GROUP
Consulting Engineers
1201 E. Expressway 83
Mission, Texas 78572
(956) 424-7898
TBPE F-1640
JACOBS
JACOBS ENGINEERING GROUP INC. FIRM #2966
LOOP 1604
EXISTING PM PEAK TRAFFIC
SHEET 30 OF 34
DESIGN CK
FED.RD. DIV.NO.
HIGHWAY NO.
LOOP 1604
CHECK PK
STATE
DISTRICT
COUNTY
SHEET NO.
GRAPHICS CC
TX
SAN ANTONIO
BEXAR
30
CHECK PK
CONTROL
SECTION
JOB
2452
01
068

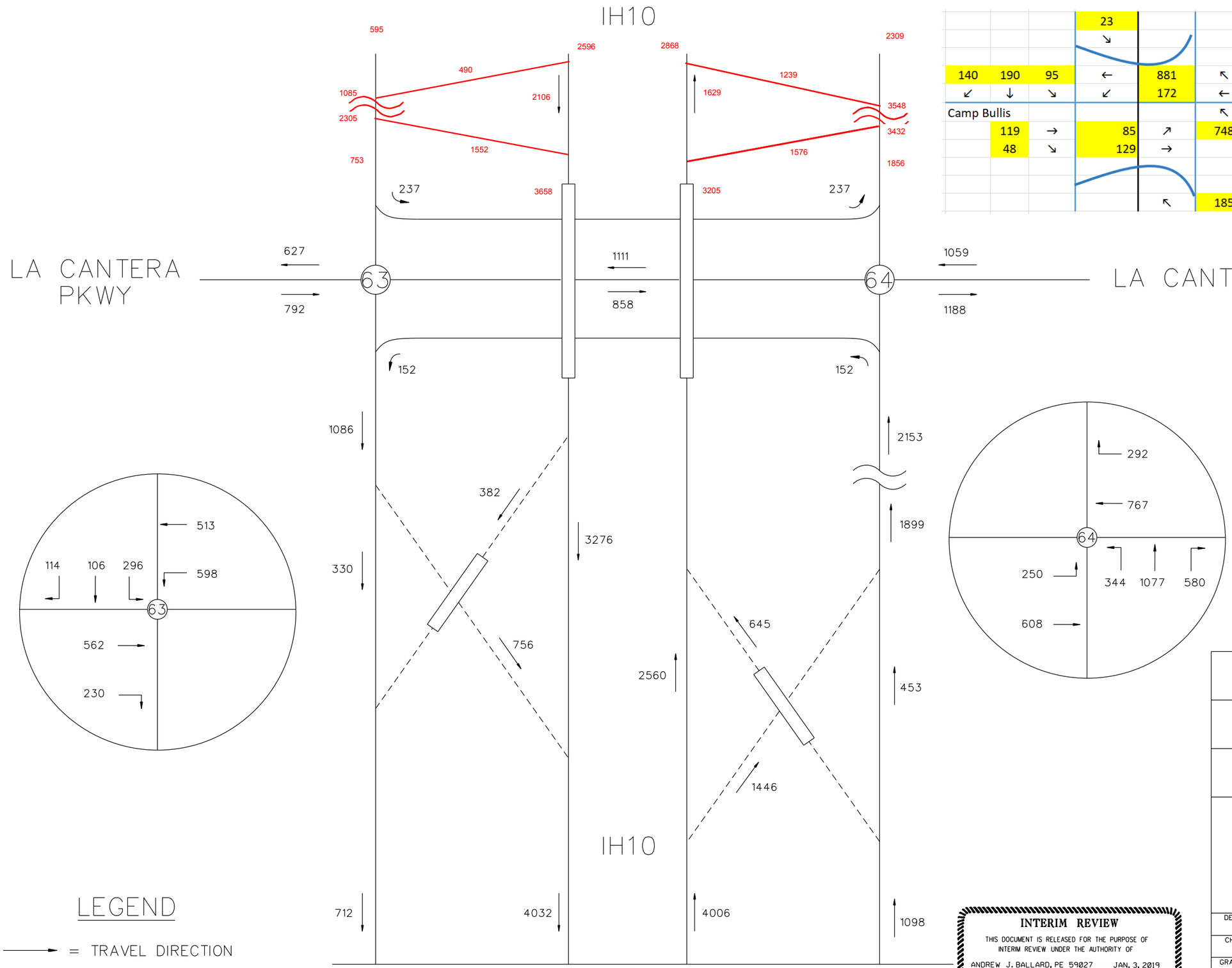

			23				
			↘				
140	190	95	←	881	↖	256	
↙	↓	↘	↙	172	←	305	
Camp Bullis					↖	↑	↗
	119	→	85	↗	748	1265	111
	48	↘	129	→			
				↖	185		

N.T.S.

LEGEND

→ = TRAVEL DIRECTION

XXXXX = YEAR 2018 PM PEAK TRAFFIC

INTERIM REVIEW

THIS DOCUMENT IS RELEASED FOR THE PURPOSE OF INTERIM REVIEW UNDER THE AUTHORITY OF

ANDREW J. BALLARD, PE 59027 JAN. 3, 2019

IT IS NOT TO BE USED FOR CONSTRUCTION PURPOSES.

© 2018

Texas Department of Transportation

TEDSI INFRASTRUCTURE GROUP
Consulting Engineers
1201 E. Expressway 83
Mission, Texas 78572
(956) 424-7898
TBPE F-1640

JACOBS
JACOBS ENGINEERING GROUP INC. FIRM #2966

LOOP 1604
EXISTING PM PEAK TRAFFIC

SHEET 31 OF 34

DESIGN CK	FED.RD. DIV.NO.			HIGHWAY NO.
				LOOP 1604
CHECK PK	STATE	DISTRICT	COUNTY	SHEET NO.
GRAPHICS CC	TX	SAN ANTONIO	BEXAR	31
	CONTROL	SECTION	JOB	
CHECK PK	2452	01	068	

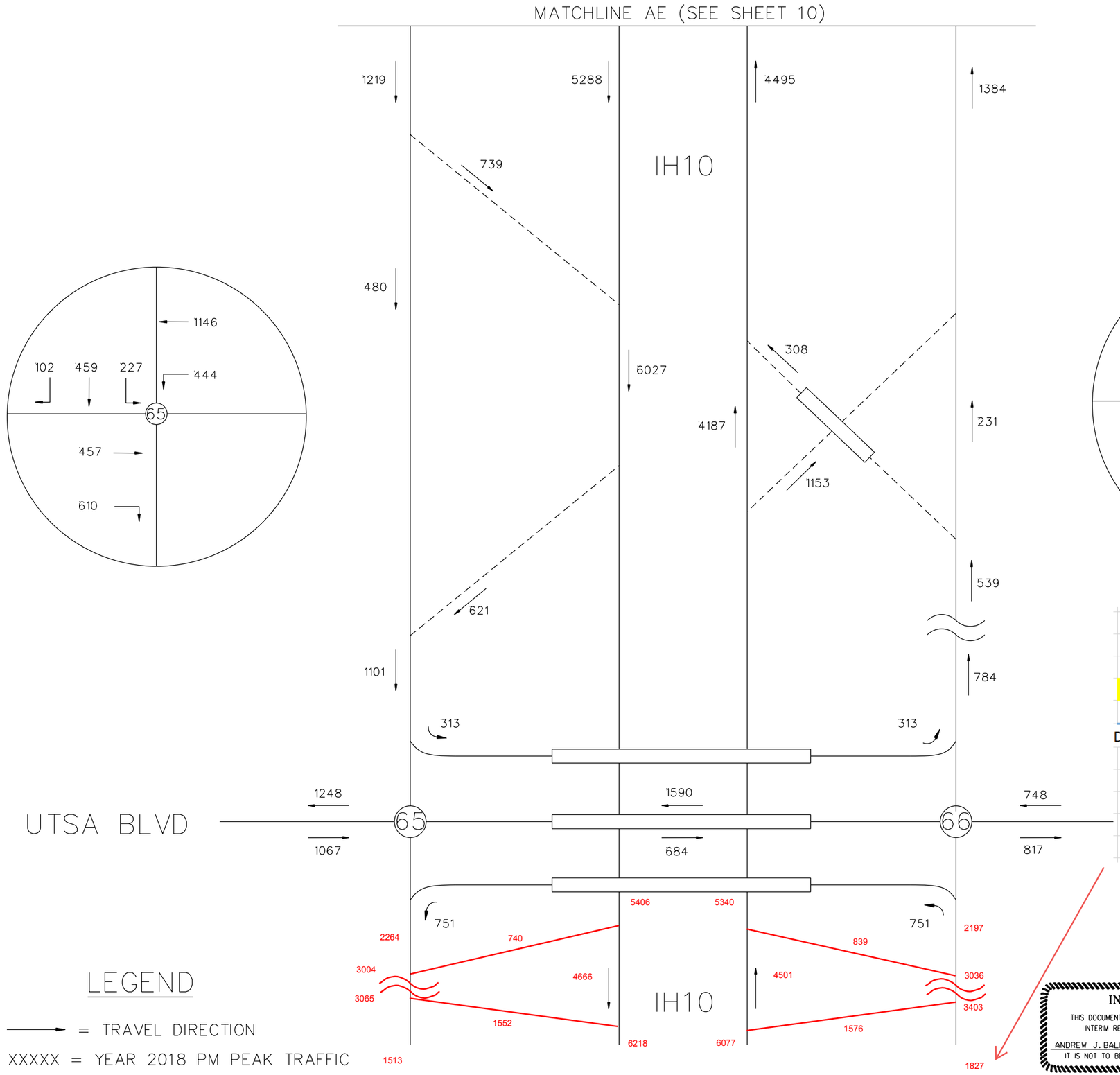

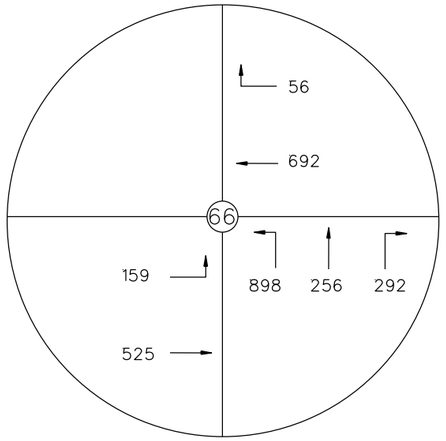

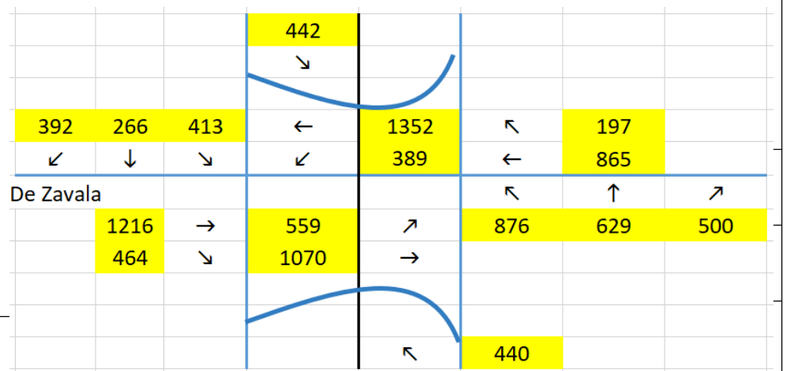

N.T.S.

INTERIM REVIEW

THIS DOCUMENT IS RELEASED FOR THE PURPOSE OF INTERIM REVIEW UNDER THE AUTHORITY OF ANDREW J. BALLARD, PE 59027 JAN. 3, 2019
IT IS NOT TO BE USED FOR CONSTRUCTION PURPOSES.

LOOP 1604
EXISTING PM PEAK TRAFFIC

SHEET 32 OF 34

DESIGN CK	FED.RD. DIV.NO.			HIGHWAY NO.
				LOOP 1604
CHECK PK	STATE	DISTRICT	COUNTY	SHEET NO.
GRAPHICS CC	TX	SAN ANTONIO	BEXAR	32
	CONTROL	SECTION	JOB	
CHECK PK	2452	01	068	

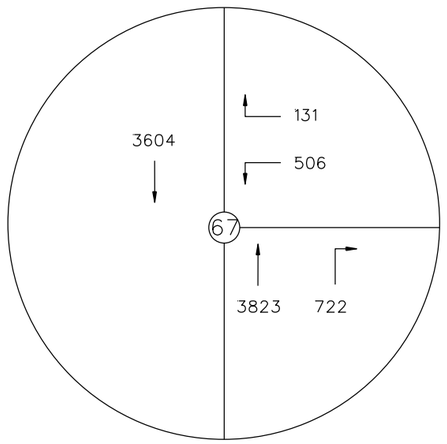

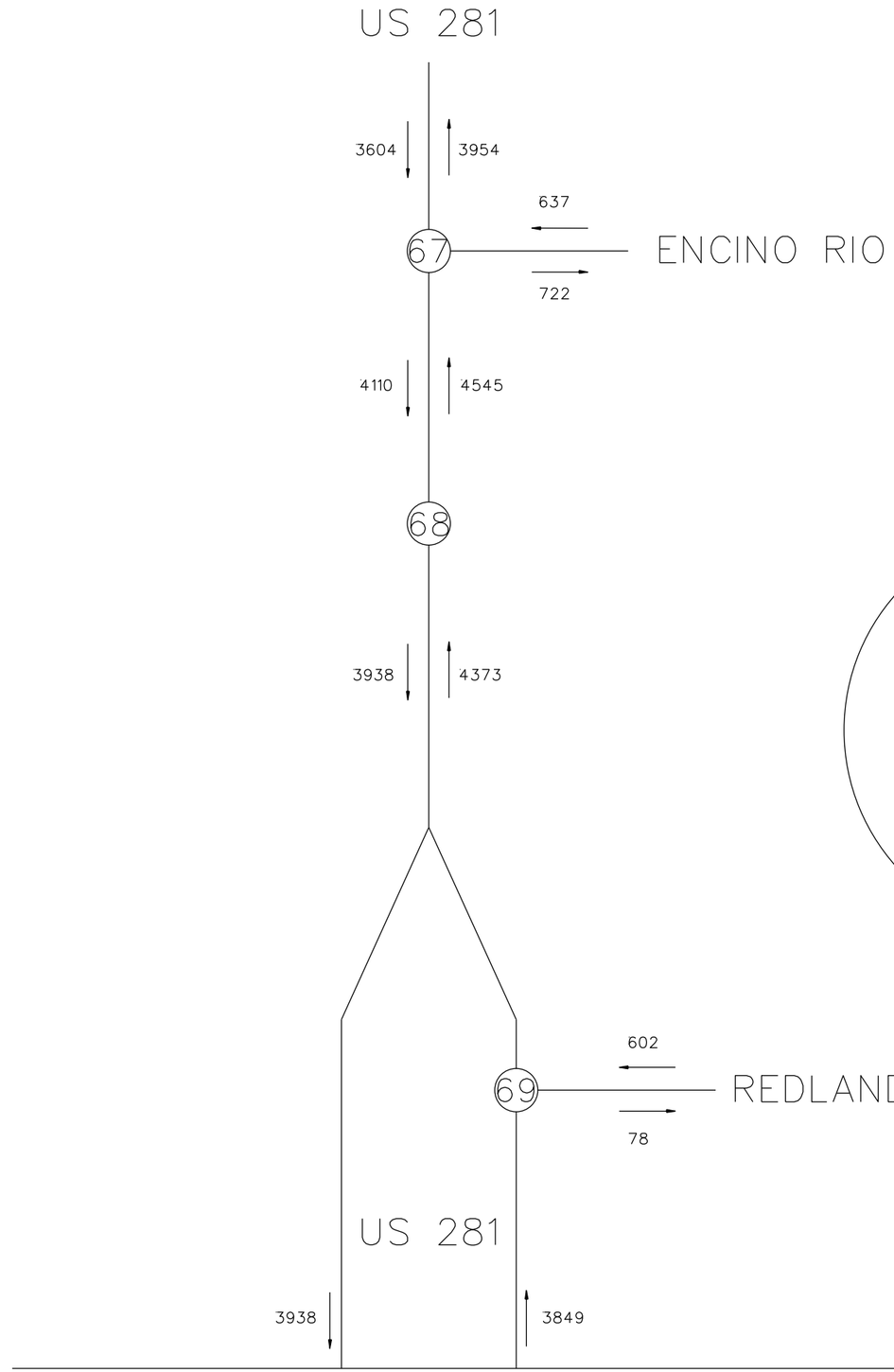

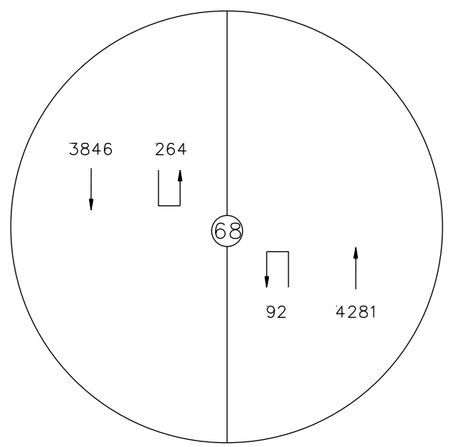

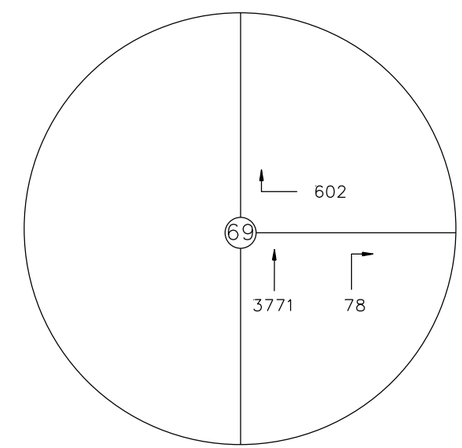

N.T.S.

LEGEND

→ = TRAVEL DIRECTION

XXXXX = YEAR 2018 PM PEAK TRAFFIC

INTERIM REVIEW

THIS DOCUMENT IS RELEASED FOR THE PURPOSE OF INTERIM REVIEW UNDER THE AUTHORITY OF

ANDREW J. BALLARD, PE 59027 JAN. 3, 2019

IT IS NOT TO BE USED FOR CONSTRUCTION PURPOSES.

© 2018

Texas Department of Transportation

TEDSI INFRASTRUCTURE GROUP
Consulting Engineers
TBPE F-1640
1201 E. Expressway 83
Mission, Texas 78572
(956) 424-7898

JACOBS
JACOBS ENGINEERING GROUP INC. FIRM #2966

LOOP 1604
EXISTING PM PEAK TRAFFIC

SHEET 33 OF 34

DESIGN CK	FED.RD. DIV.NO.			HIGHWAY NO.
CHECK PK				LOOP 1604
	STATE	DISTRICT	COUNTY	SHEET NO.
GRAPHICS CC	TX	SAN ANTONIO	BEXAR	33
CHECK PK	CONTROL	SECTION	JOB	
	2452	01	068	

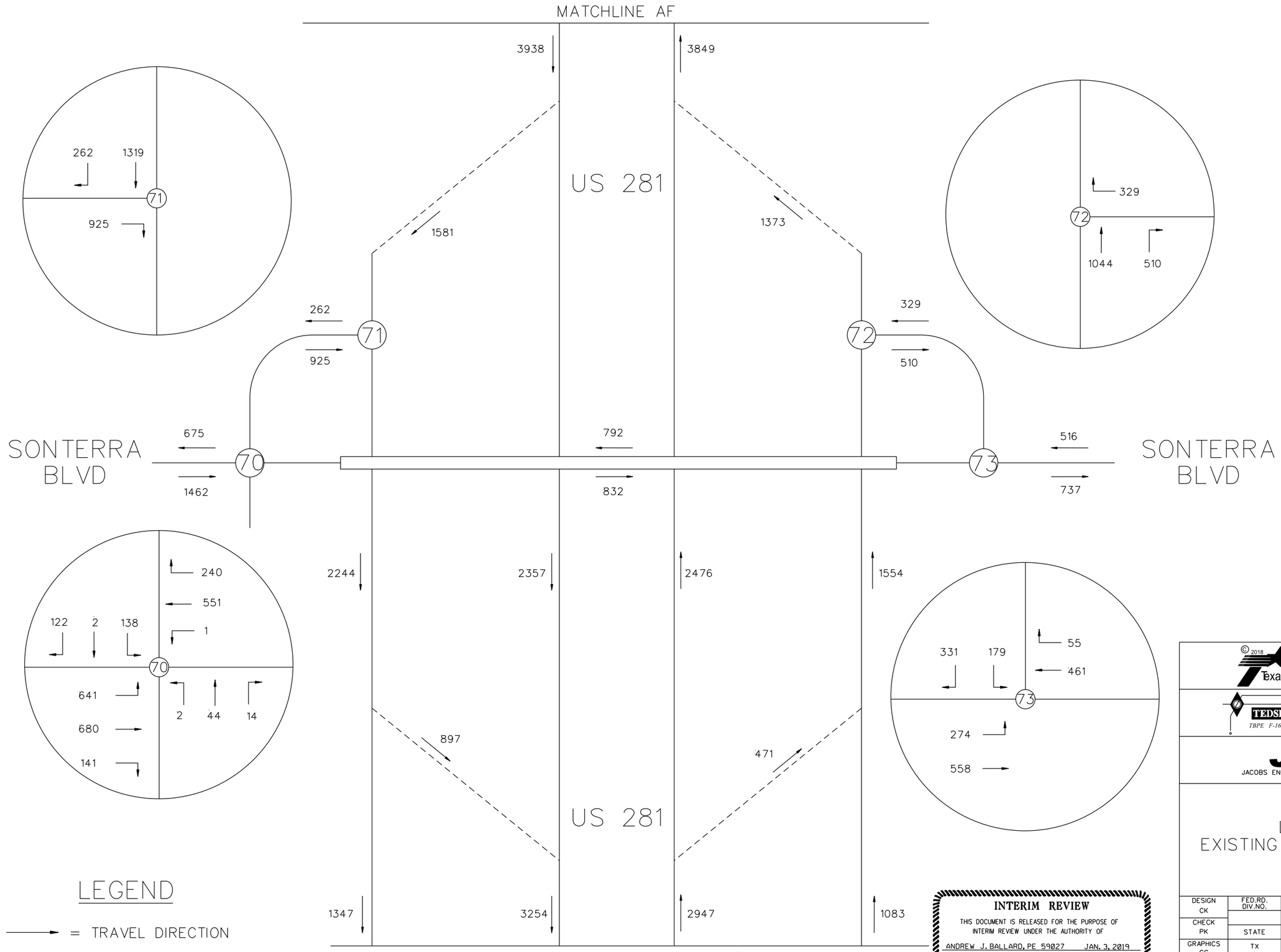

N.T.S.

LEGEND

→ = TRAVEL DIRECTION

XXXXX = YEAR 2018 PM PEAK TRAFFIC

INTERIM REVIEW

THIS DOCUMENT IS RELEASED FOR THE PURPOSE OF INTERIM REVIEW UNDER THE AUTHORITY OF ANDREW J. BALLARD, PE 59027 JAN. 3, 2019
IT IS NOT TO BE USED FOR CONSTRUCTION PURPOSES.

© 2018

Texas Department of Transportation

TEDSI INFRASTRUCTURE GROUP
Consulting Engineers
1201 E. Expressway 83
Mission, Texas 78572
(956) 424-7898
TBPE F-1640

JACOBS
JACOBS ENGINEERING GROUP INC. FIRM #2966

LOOP 1604
EXISTING PM PEAK TRAFFIC

SHEET 34 OF 34

DESIGN CK	FED.RD. DIV.NO.			HIGHWAY NO.
CHECK PK				LOOP 1604
	STATE	DISTRICT	COUNTY	SHEET NO.
GRAPHICS CC	TX	SAN ANTONIO	BEXAR	34
CHECK PK	CONTROL	SECTION	JOB	
	2452	01	068	

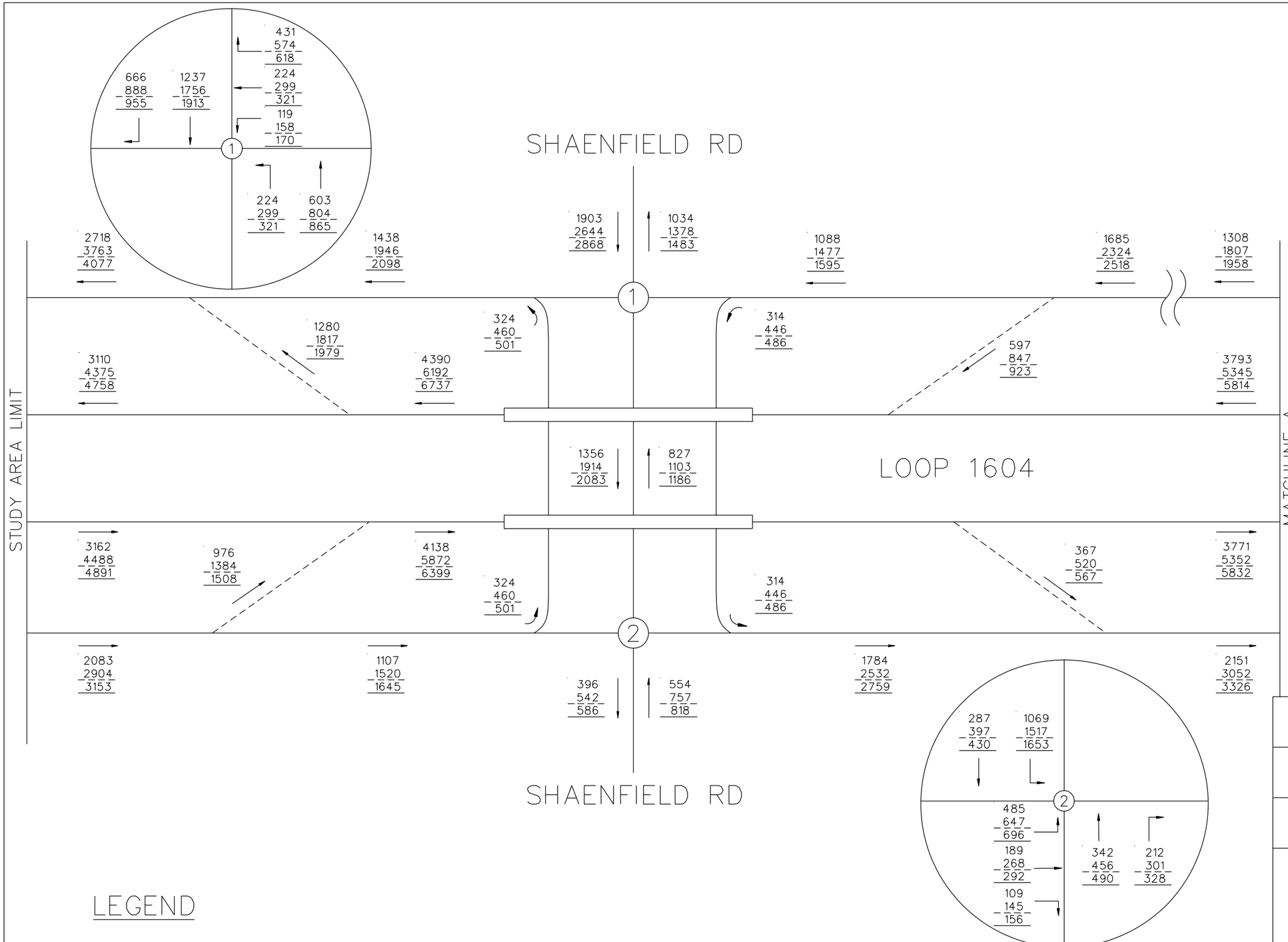

N.T.S.

LEGEND

→ = TRAVEL DIRECTION

XXXXX = YEAR 2025 AM PEAK TRAFFIC

XXXXX = YEAR 2045 AM PEAK TRAFFIC

XXXXX = YEAR 2055 AM PEAK TRAFFIC

INTERIM REVIEW

THIS DOCUMENT IS RELEASED FOR THE PURPOSE OF INTERIM REVIEW UNDER THE AUTHORITY OF ANDREW J. BALLARD, PE 59027 JUNE 28, 2019
IT IS NOT TO BE USED FOR CONSTRUCTION PURPOSES.

© 2018

Texas Department of Transportation

TEDSI INFRASTRUCTURE GROUP
Consulting Engineers
1201 E. Expressway 83
Mission, Texas 78572
(956) 424-7898
TBPE F-1640

JACOBS
JACOBS ENGINEERING GROUP INC. FIRM #2966

LOOP 1604
AM PEAK TRAFFIC PROJECTIONS
BUILD CONDITION

SHEET 1 OF 34

DESIGN	FED.RD. DIV.NO.			HIGHWAY NO.
CK				LOOP 1604
CHECK	STATE	DISTRICT	COUNTY	SHEET NO.
PK	TX	SAN ANTONIO	BEXAR	1
GRAPHICS	CONTROL	SECTION	JOB	
CC	2452	01	068	
CHECK				
PK				

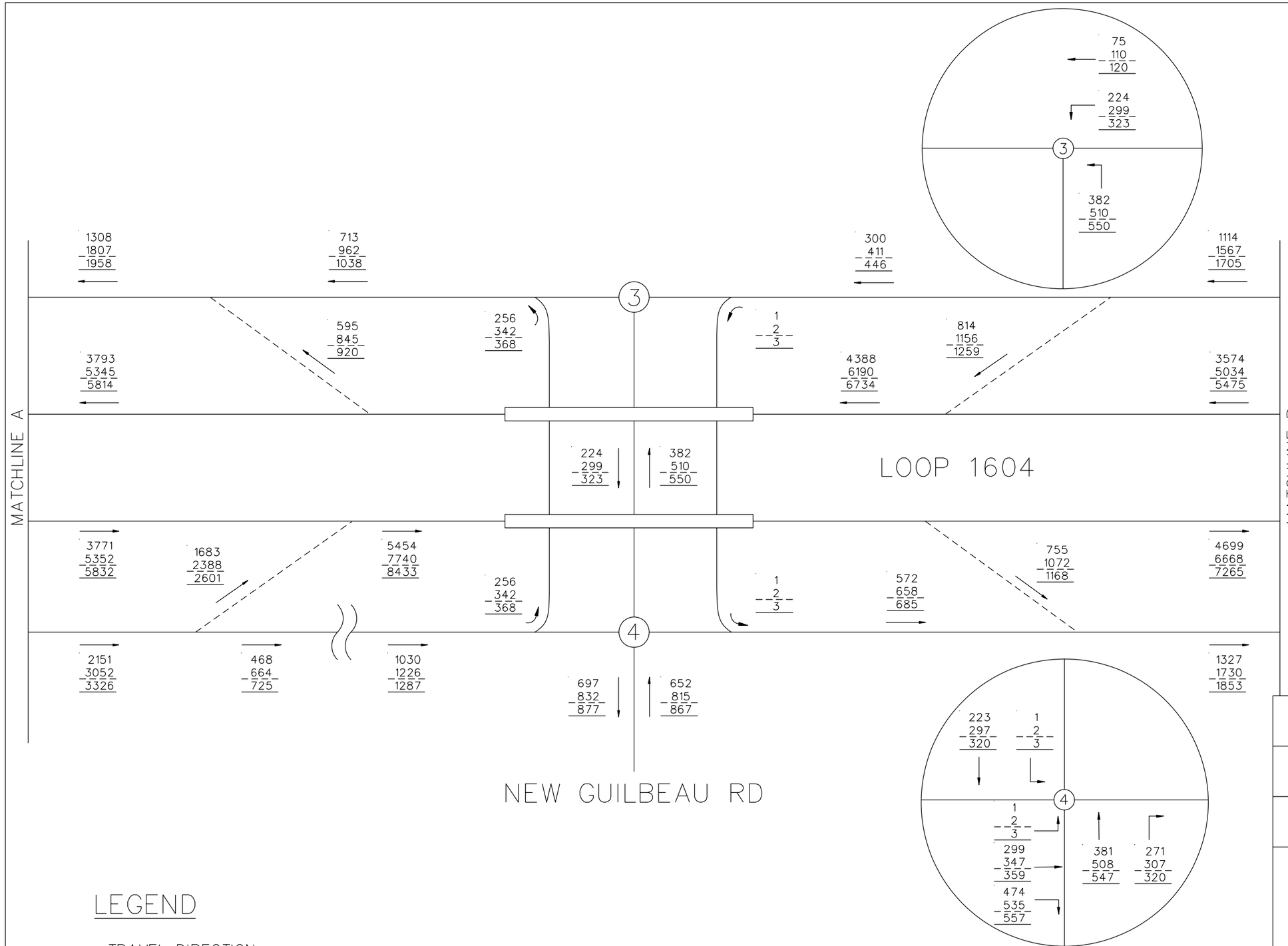

N.T.S.

LEGEND

→ = TRAVEL DIRECTION

XXXXX = YEAR 2025 AM PEAK TRAFFIC

XXXXX = YEAR 2045 AM PEAK TRAFFIC

XXXXX = YEAR 2055 AM PEAK TRAFFIC

INTERIM REVIEW

THIS DOCUMENT IS RELEASED FOR THE PURPOSE OF INTERIM REVIEW UNDER THE AUTHORITY OF

ANDREW J. BALLARD, PE 59027 JUNE 28, 2019

IT IS NOT TO BE USED FOR CONSTRUCTION PURPOSES.

© 2018

Texas Department of Transportation

TEDSI INFRASTRUCTURE GROUP
Consulting Engineers
1201 E. Expressway 83
Mission, Texas 78572
(956) 424-7898
TBPE F-1640

JACOBS®
JACOBS ENGINEERING GROUP INC. FIRM #2966

LOOP 1604
AM PEAK TRAFFIC PROJECTIONS
BUILD CONDITION

SHEET 2 OF 34

DESIGN	FED.RD. DIV.NO.			HIGHWAY NO.
CK				LOOP 1604
CHECK	STATE	DISTRICT	COUNTY	SHEET NO.
PK	TX	SAN ANTONIO	BEXAR	2
GRAPHICS	CONTROL	SECTION	JOB	
CC	2452	01	068	
CHECK				
PK				

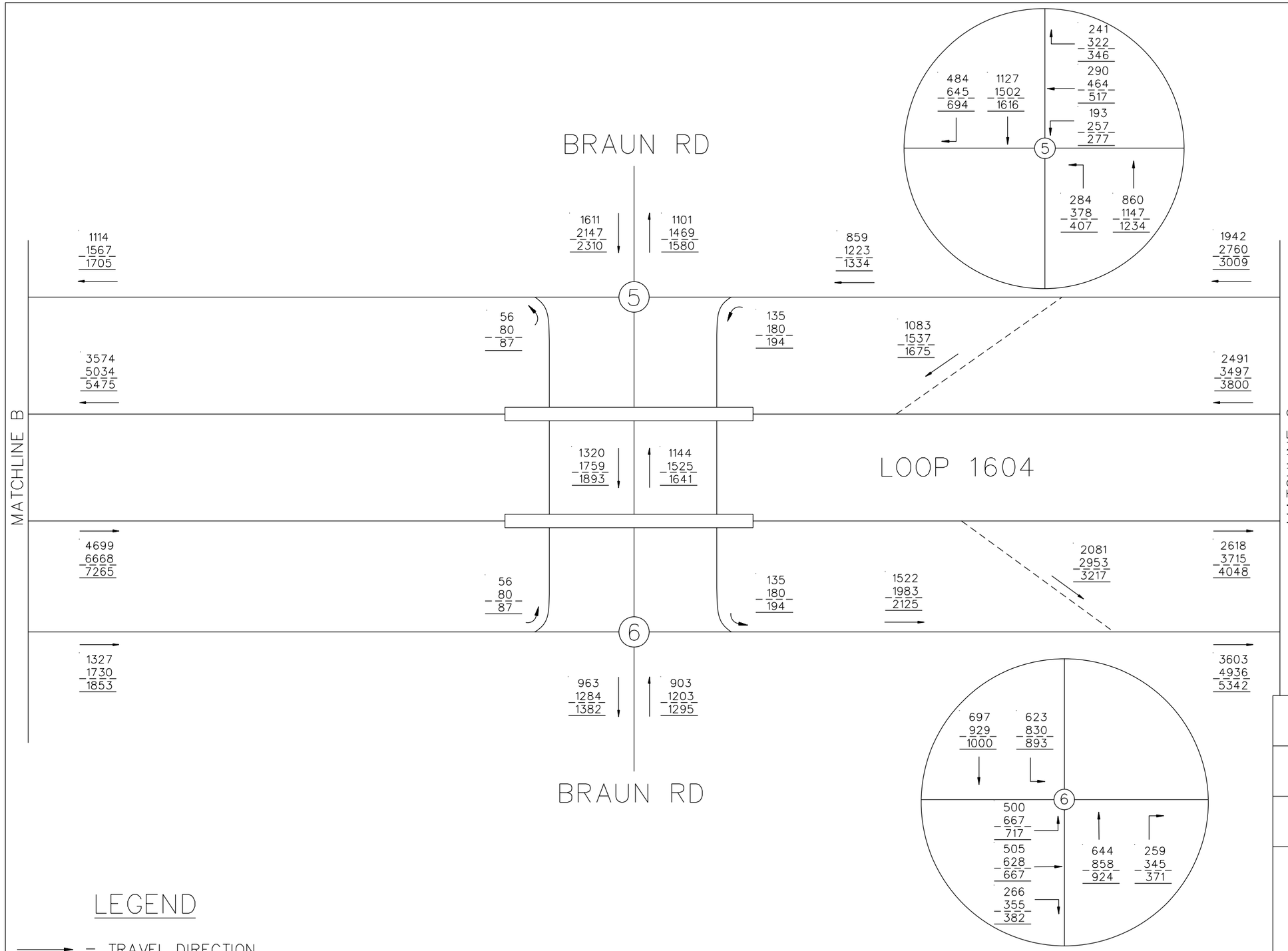

N.T.S.

LEGEND

→ = TRAVEL DIRECTION

XXXXX = YEAR 2025 AM PEAK TRAFFIC

XXXXX = YEAR 2045 AM PEAK TRAFFIC

XXXXX = YEAR 2055 AM PEAK TRAFFIC

INTERIM REVIEW

THIS DOCUMENT IS RELEASED FOR THE PURPOSE OF INTERIM REVIEW UNDER THE AUTHORITY OF

ANDREW J. BALLARD, PE 59027 JUNE 28, 2019

IT IS NOT TO BE USED FOR CONSTRUCTION PURPOSES.

© 2018 Texas Department of Transportation

TEDSI INFRASTRUCTURE GROUP
Consulting Engineers
1201 E. Expressway 83
Mission, Texas 78572
(956) 424-7898
TBPE F-1640

JACOBS®
JACOBS ENGINEERING GROUP INC. FIRM #2966

LOOP 1604
AM PEAK TRAFFIC PROJECTIONS
BUILD CONDITION

SHEET 3 OF 34

DESIGN CK	FED.RD. DIV.NO.			HIGHWAY NO.
				LOOP 1604
CHECK PK	STATE	DISTRICT	COUNTY	SHEET NO.
GRAPHICS CC	TX	SAN ANTONIO	BEXAR	3
	CONTROL	SECTION	JOB	
CHECK PK	2452	01	068	

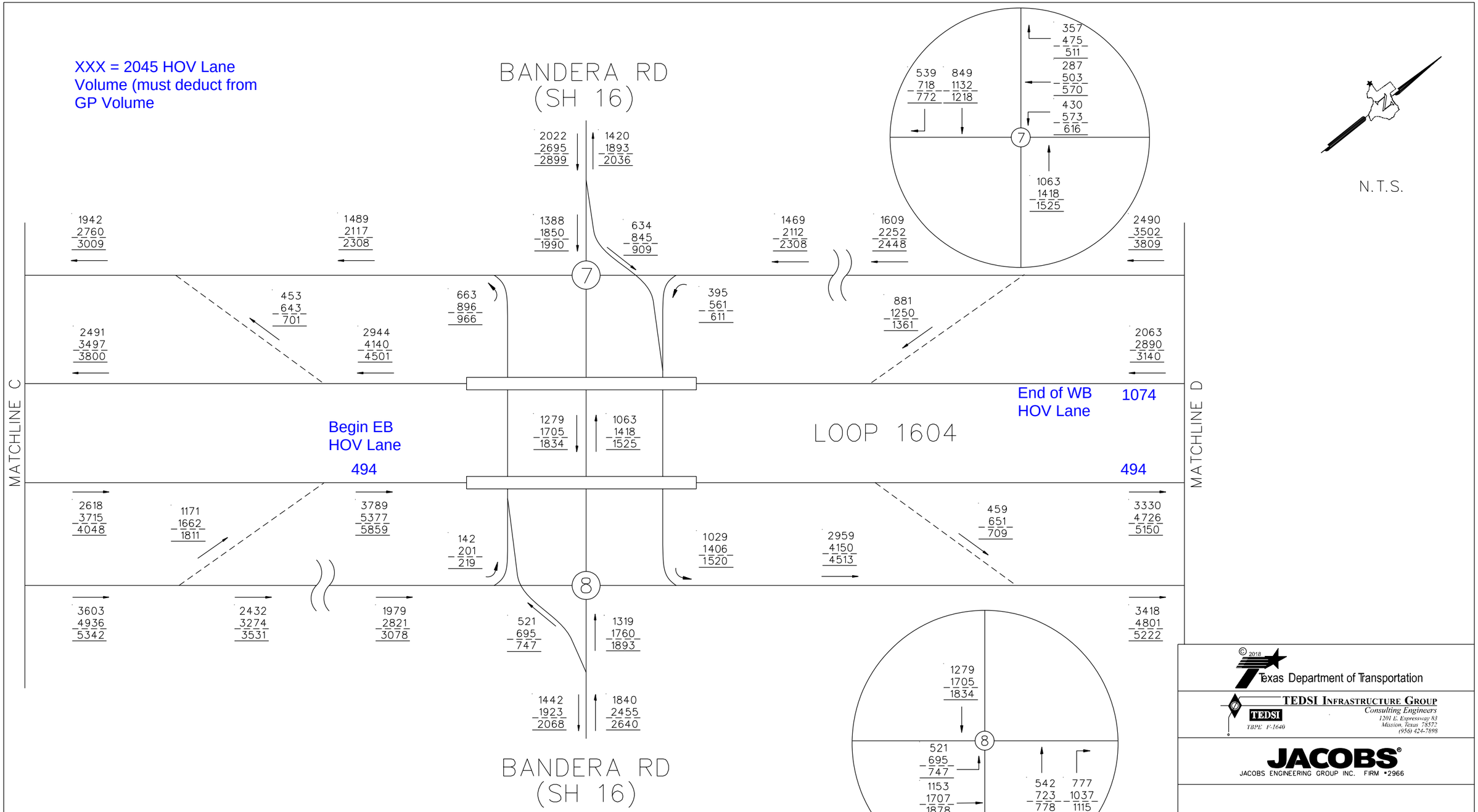

LEGEND

→ = TRAVEL DIRECTION

XXXXX = YEAR 2025 AM PEAK TRAFFIC

XXXXX = YEAR 2045 AM PEAK TRAFFIC

XXXXX = YEAR 2055 AM PEAK TRAFFIC

INTERIM REVIEW

THIS DOCUMENT IS RELEASED FOR THE PURPOSE OF INTERIM REVIEW UNDER THE AUTHORITY OF

ANDREW J. BALLARD, PE 59027 JUNE 28, 2019

IT IS NOT TO BE USED FOR CONSTRUCTION PURPOSES.

© 2018 Texas Department of Transportation

TEDSI INFRASTRUCTURE GROUP
Consulting Engineers
1201 E. Expressway 83
Mission, Texas 78572
(956) 424-7898
TBPE F-1640

JACOBS®
JACOBS ENGINEERING GROUP INC. FIRM #2966

LOOP 1604
AM PEAK TRAFFIC PROJECTIONS
BUILD CONDITION

SHEET 4 OF 34

DESIGN CK	FED.RD. DIV.NO.			HIGHWAY NO.
				LOOP 1604
CHECK PK	STATE	DISTRICT	COUNTY	SHEET NO.
GRAPHICS CC	TX	SAN ANTONIO	BEXAR	4
	CONTROL	SECTION	JOB	
CHECK PK	2452	01	068	

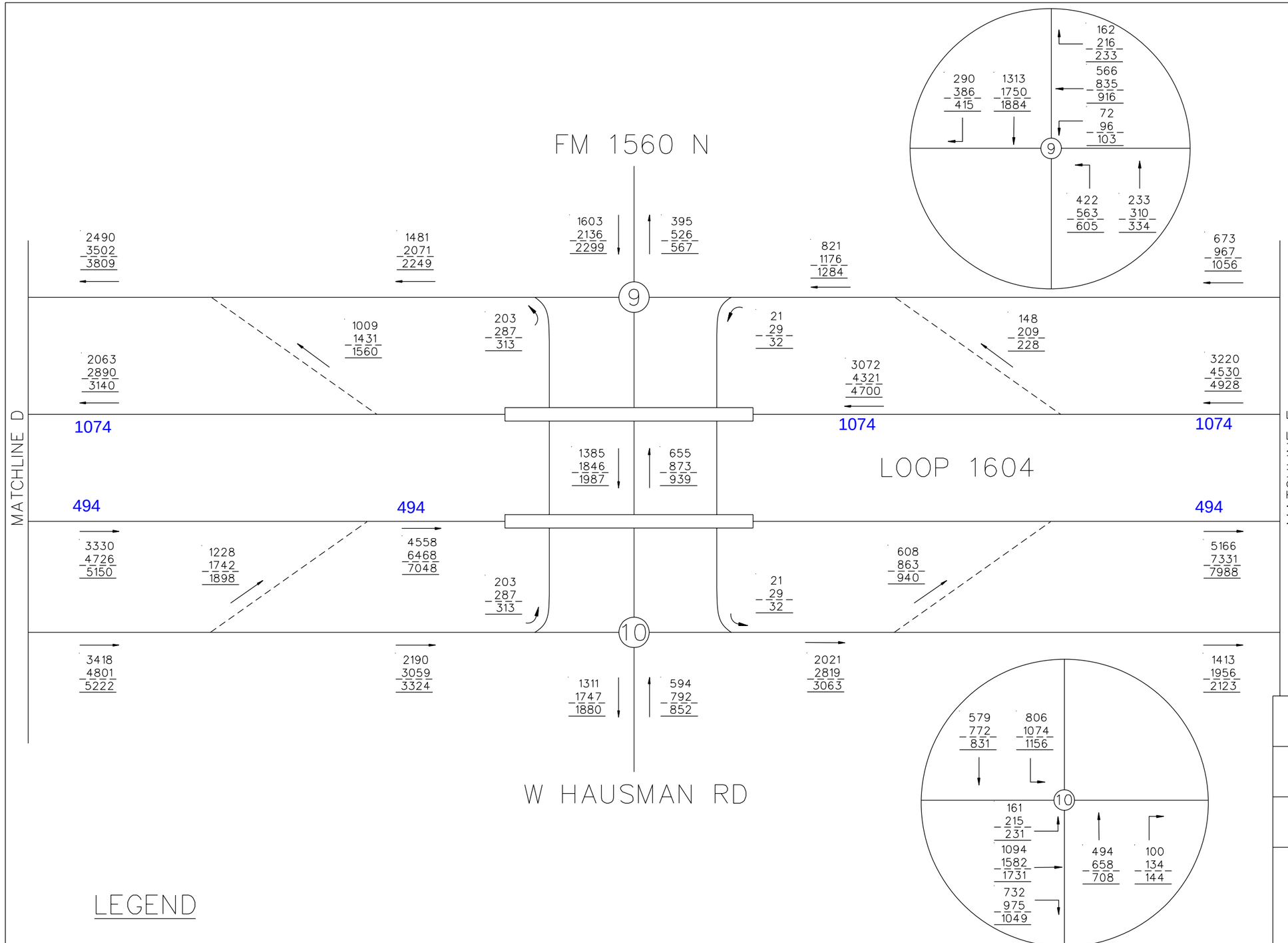

N.T.S.

LEGEND

→ = TRAVEL DIRECTION

XXXXX = YEAR 2025 AM PEAK TRAFFIC

XXXXX = YEAR 2045 AM PEAK TRAFFIC

XXXXX = YEAR 2055 AM PEAK TRAFFIC

INTERIM REVIEW

THIS DOCUMENT IS RELEASED FOR THE PURPOSE OF INTERIM REVIEW UNDER THE AUTHORITY OF

ANDREW J. BALLARD, PE 59027 JUNE 28, 2019

IT IS NOT TO BE USED FOR CONSTRUCTION PURPOSES.

© 2018

Texas Department of Transportation

TEDSI INFRASTRUCTURE GROUP
Consulting Engineers
1201 E. Expressway 83
Mission, Texas 78572
(956) 424-7898
TBPE F-1640

JACOBS®
JACOBS ENGINEERING GROUP INC. FIRM #2966

LOOP 1604
AM PEAK TRAFFIC PROJECTIONS
BUILD CONDITION

SHEET 5 OF 34

DESIGN CK	FED.RD. DIV.NO.			HIGHWAY NO.
CHECK PK				LOOP 1604
	STATE	DISTRICT	COUNTY	SHEET NO.
GRAPHICS CC	TX	SAN ANTONIO	BEXAR	5
	CONTROL	SECTION	JOB	
CHECK PK	2452	01	068	

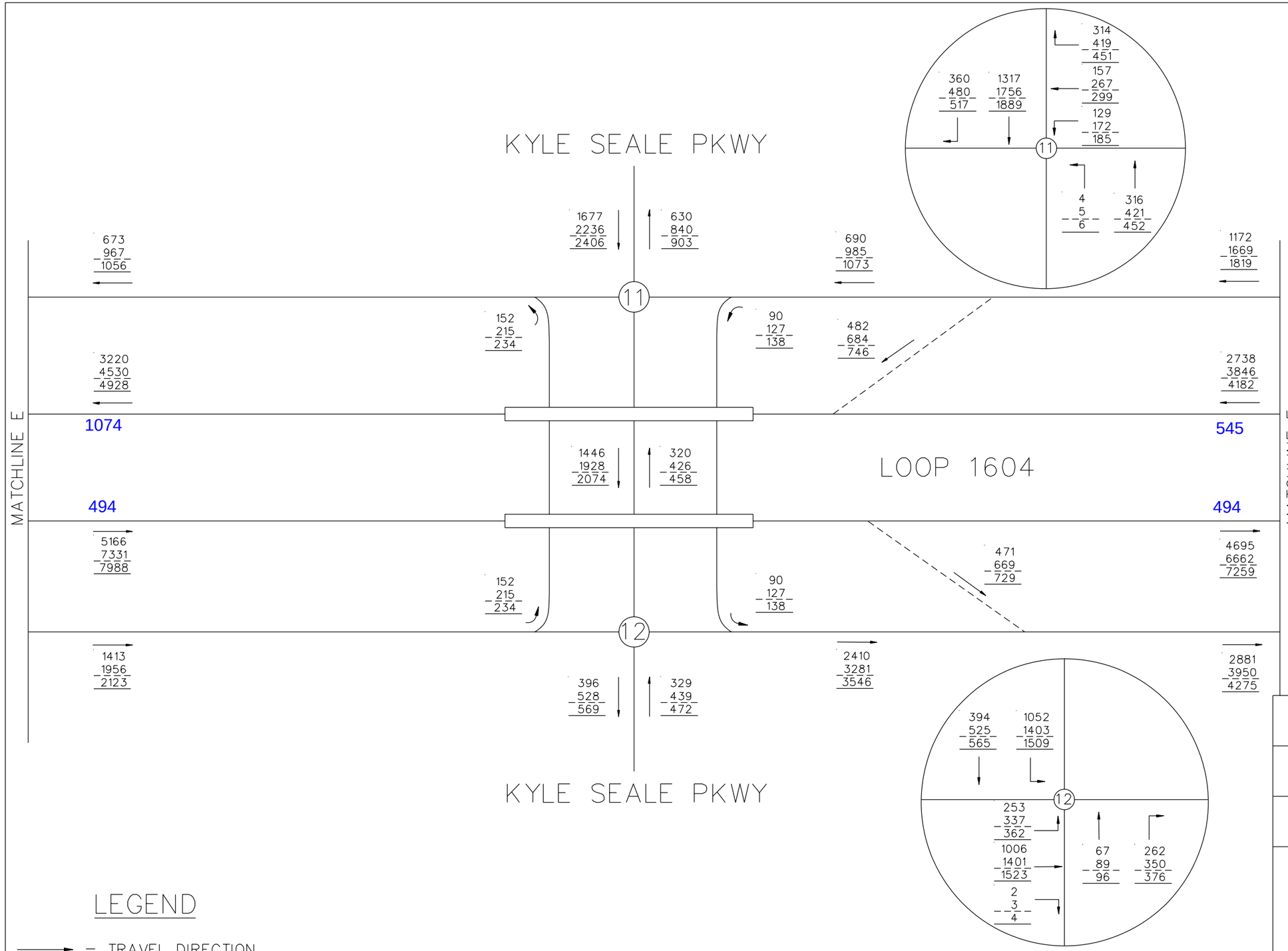

N.T.S.

LEGEND

→ = TRAVEL DIRECTION

XXXXX = YEAR 2025 AM PEAK TRAFFIC

XXXXX = YEAR 2045 AM PEAK TRAFFIC

XXXXX = YEAR 2055 AM PEAK TRAFFIC

INTERIM REVIEW

THIS DOCUMENT IS RELEASED FOR THE PURPOSE OF INTERIM REVIEW UNDER THE AUTHORITY OF

ANDREW J. BALLARD, PE 59027 JUNE 28, 2019

IT IS NOT TO BE USED FOR CONSTRUCTION PURPOSES.

© 2018 Texas Department of Transportation

TEDSI INFRASTRUCTURE GROUP
Consulting Engineers
1201 E. Expressway 83
Mission, Texas 78572
(956) 424-7898
TBPE F-1640

JACOBS®
JACOBS ENGINEERING GROUP INC. FIRM #2966

LOOP 1604
AM PEAK TRAFFIC PROJECTIONS
BUILD CONDITION

SHEET 6 OF 34

DESIGN CK	FED.RD. DIV.NO.			HIGHWAY NO.
				LOOP 1604
CHECK PK	STATE	DISTRICT	COUNTY	SHEET NO.
GRAPHICS CC	TX	SAN ANTONIO	BEXAR	6
	CONTROL	SECTION	JOB	
CHECK PK	2452	01	068	

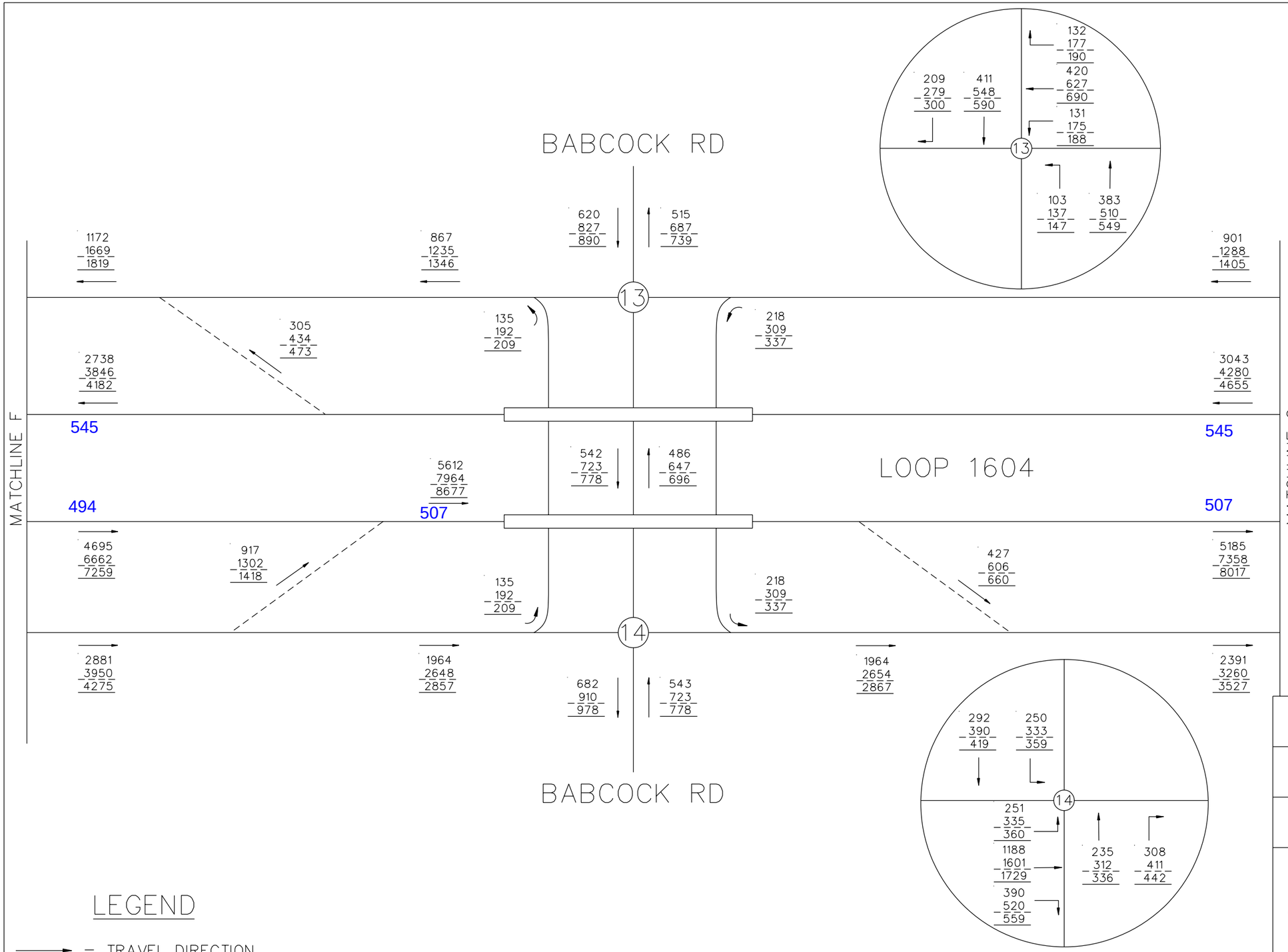

N.T.S.

LEGEND

→ = TRAVEL DIRECTION

XXXXX = YEAR 2025 AM PEAK TRAFFIC

XXXXX = YEAR 2045 AM PEAK TRAFFIC

XXXXX = YEAR 2055 AM PEAK TRAFFIC

INTERIM REVIEW

THIS DOCUMENT IS RELEASED FOR THE PURPOSE OF INTERIM REVIEW UNDER THE AUTHORITY OF

ANDREW J. BALLARD, PE 59027 JUNE 28, 2019

IT IS NOT TO BE USED FOR CONSTRUCTION PURPOSES.

© 2018

Texas Department of Transportation

TEDSI INFRASTRUCTURE GROUP
Consulting Engineers
1201 E. Expressway 83
Mission, Texas 78572
(956) 424-7898
TBPE F-1640

JACOBS®
JACOBS ENGINEERING GROUP INC. FIRM #2966

LOOP 1604
AM PEAK TRAFFIC PROJECTIONS
BUILD CONDITION

SHEET 7 OF 34

DESIGN CK	FED.RD. DIV.NO.			HIGHWAY NO.
				LOOP 1604
CHECK PK	STATE	DISTRICT	COUNTY	SHEET NO.
GRAPHICS CC	TX	SAN ANTONIO	BEXAR	7
	CONTROL	SECTION	JOB	
CHECK PK	2452	01	068	

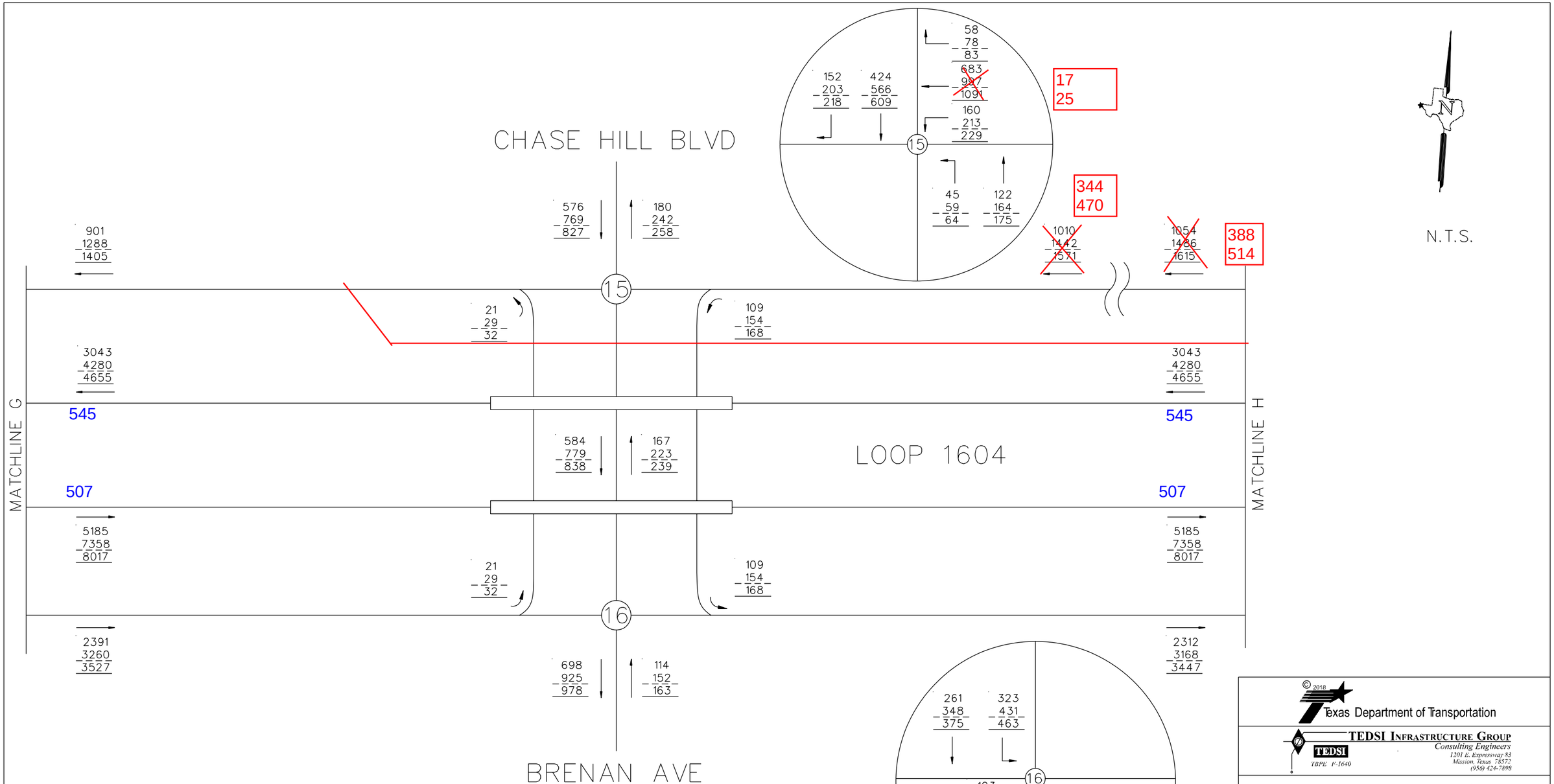

LEGEND

→ = TRAVEL DIRECTION

XXXXX = YEAR 2025 AM PEAK TRAFFIC

XXXXX = YEAR 2045 AM PEAK TRAFFIC

XXXXX = YEAR 2055 AM PEAK TRAFFIC

INTERIM REVIEW

THIS DOCUMENT IS RELEASED FOR THE PURPOSE OF INTERIM REVIEW UNDER THE AUTHORITY OF

ANDREW J. BALLARD, PE 59027 JUNE 28, 2019

IT IS NOT TO BE USED FOR CONSTRUCTION PURPOSES.

© 2018

Texas Department of Transportation

TEDSI INFRASTRUCTURE GROUP
Consulting Engineers
1201 E. Expressway 83
Mission, Texas 78572
(956) 424-7898
TBPE F-1640

JACOBS
JACOBS ENGINEERING GROUP INC. FIRM #2966

LOOP 1604
AM PEAK TRAFFIC PROJECTIONS
BUILD CONDITION

SHEET 8 OF 34

DESIGN CK	FED.RD. DIV.NO.			HIGHWAY NO.
CHECK PK				LOOP 1604
	STATE	DISTRICT	COUNTY	SHEET NO.
GRAPHICS CC	TX	SAN ANTONIO	BEXAR	8
CHECK PK	CONTROL	SECTION	JOB	
	2452	01	068	

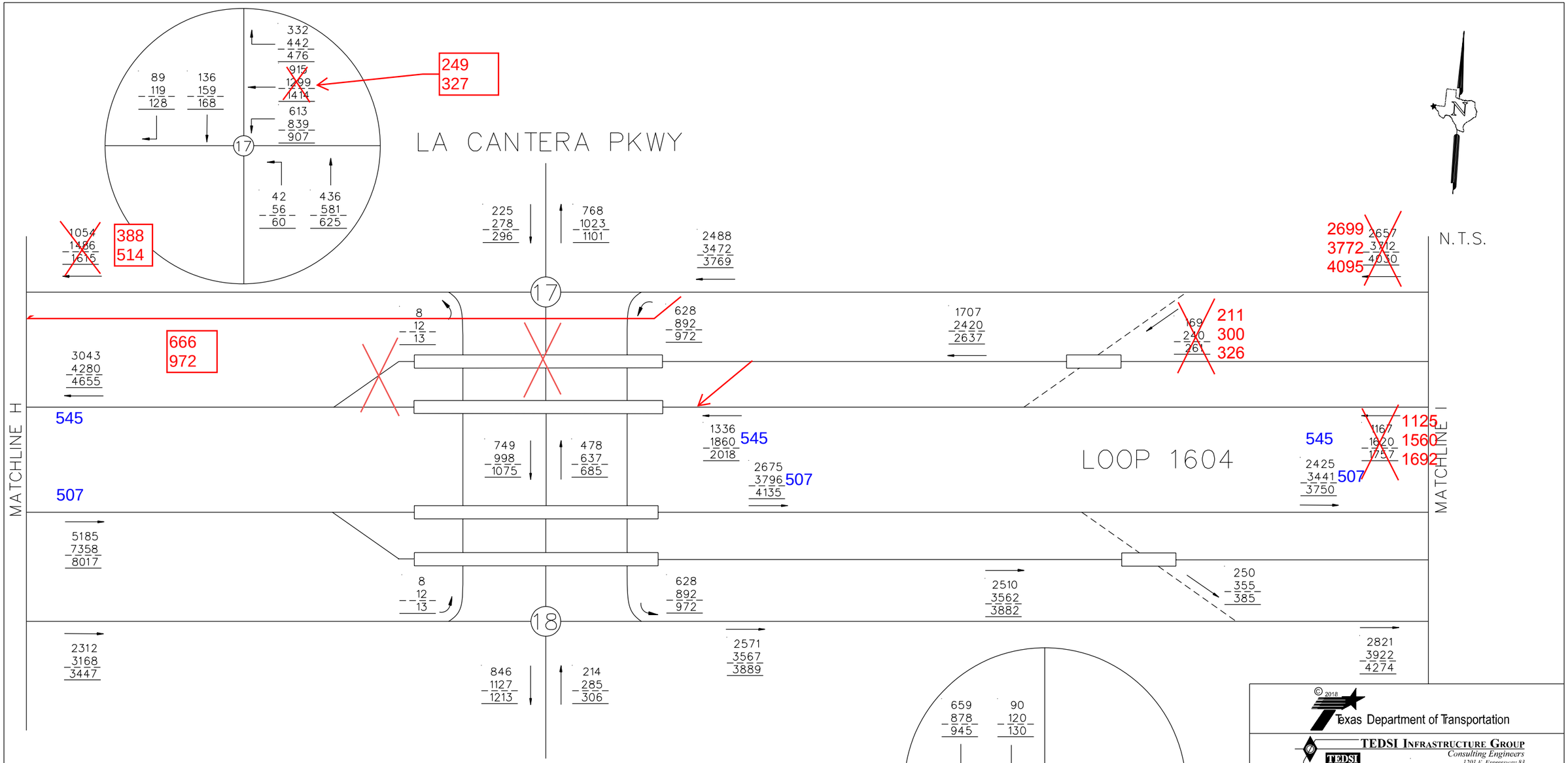

LEGEND

→ = TRAVEL DIRECTION

XXXXX = YEAR 2025 AM PEAK TRAFFIC

XXXXX = YEAR 2045 AM PEAK TRAFFIC

XXXXX = YEAR 2055 AM PEAK TRAFFIC

INTERIM REVIEW

THIS DOCUMENT IS RELEASED FOR THE PURPOSE OF INTERIM REVIEW UNDER THE AUTHORITY OF

ANDREW J. BALLARD, PE 59027 JUNE 28, 2019

IT IS NOT TO BE USED FOR CONSTRUCTION PURPOSES.

© 2018 Texas Department of Transportation

TEDSI INFRASTRUCTURE GROUP
Consulting Engineers
1201 E. Expressway 83
Mission, Texas 78572
(956) 424-7898
TBPE F-1640

JACOBS
JACOBS ENGINEERING GROUP INC. FIRM #2966

LOOP 1604
AM PEAK TRAFFIC PROJECTIONS
BUILD CONDITION

SHEET 9 OF 34

DESIGN CK	FED.RD. DIV.NO.			HIGHWAY NO.
				LOOP 1604
CHECK PK	STATE	DISTRICT	COUNTY	SHEET NO.
GRAPHICS CC	TX	SAN ANTONIO	BEXAR	9
	CONTROL	SECTION	JOB	
CHECK PK	2452	01	068	

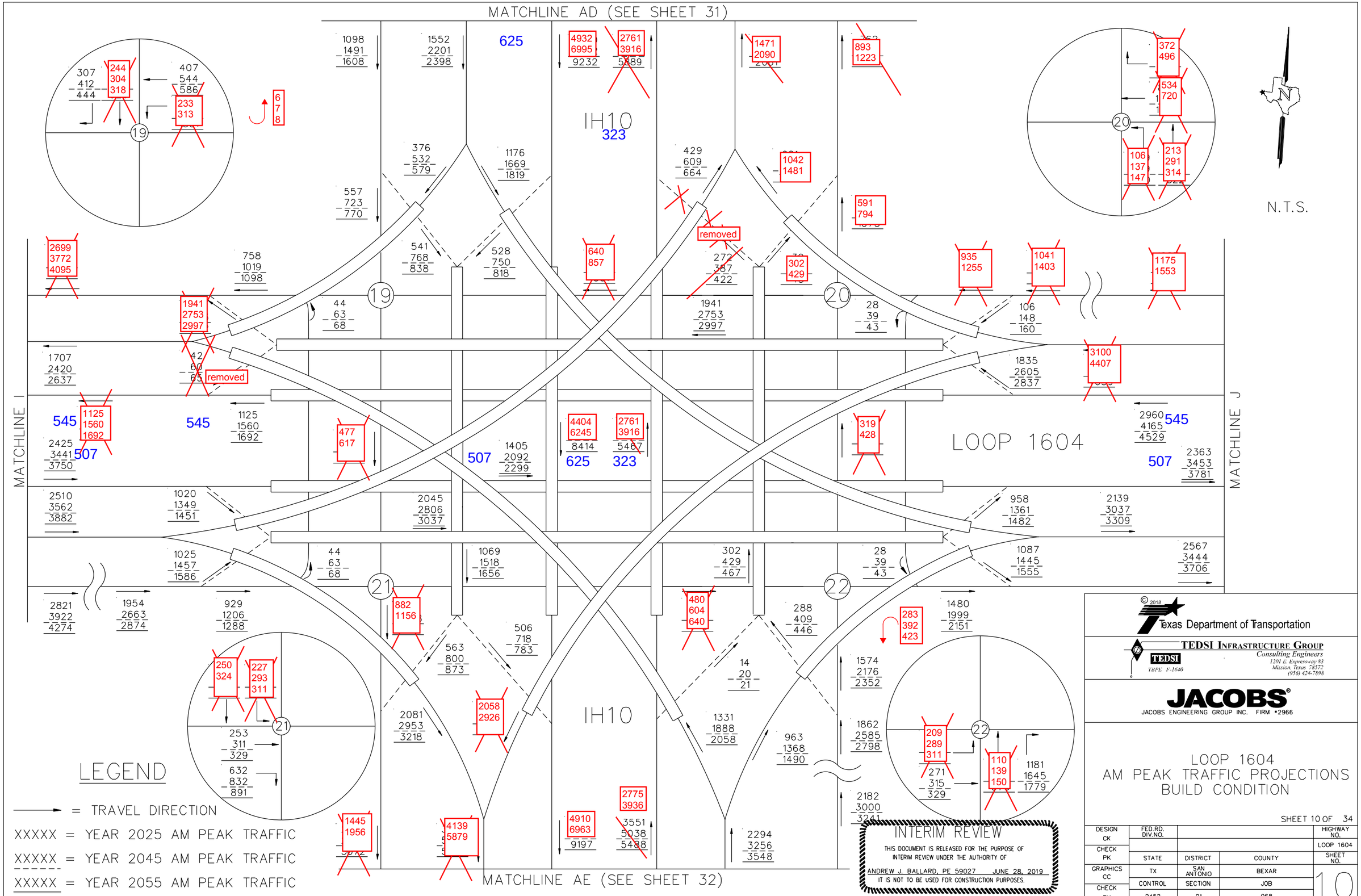
MATCHLINE AD (SEE SHEET 31)
MATCHLINE AE (SEE SHEET 32)
MATCHLINE I
MATCHLINE J
IH10
LOOP 1604
N.T.S.
LEGEND
= TRAVEL DIRECTION
XXXXX = YEAR 2025 AM PEAK TRAFFIC
XXXXX = YEAR 2045 AM PEAK TRAFFIC
XXXXX = YEAR 2055 AM PEAK TRAFFIC
INTERIM REVIEW
THIS DOCUMENT IS RELEASED FOR THE PURPOSE OF INTERIM REVIEW UNDER THE AUTHORITY OF
ANDREW J. BALLARD, PE 59027 JUNE 28, 2019
IT IS NOT TO BE USED FOR CONSTRUCTION PURPOSES.
© 2018
Texas Department of Transportation
TEDSI INFRASTRUCTURE GROUP
Consulting Engineers
1201 E. Expressway 83
Mission, Texas 78572
(956) 424-7898
TBPE F-1640
JACOBS
JACOBS ENGINEERING GROUP INC. FIRM •2966
LOOP 1604
AM PEAK TRAFFIC PROJECTIONS
BUILD CONDITION
SHEET 10 OF 34
DESIGN CK
CHECK PK
GRAPHICS CC
CHECK PK
FED.RD. DIV.NO.
HIGHWAY NO.
LOOP 1604
STATE
DISTRICT
COUNTY
SHEET NO.
TX
SAN ANTONIO
BEXAR
10
CONTROL
SECTION
JOB
2452
01
068

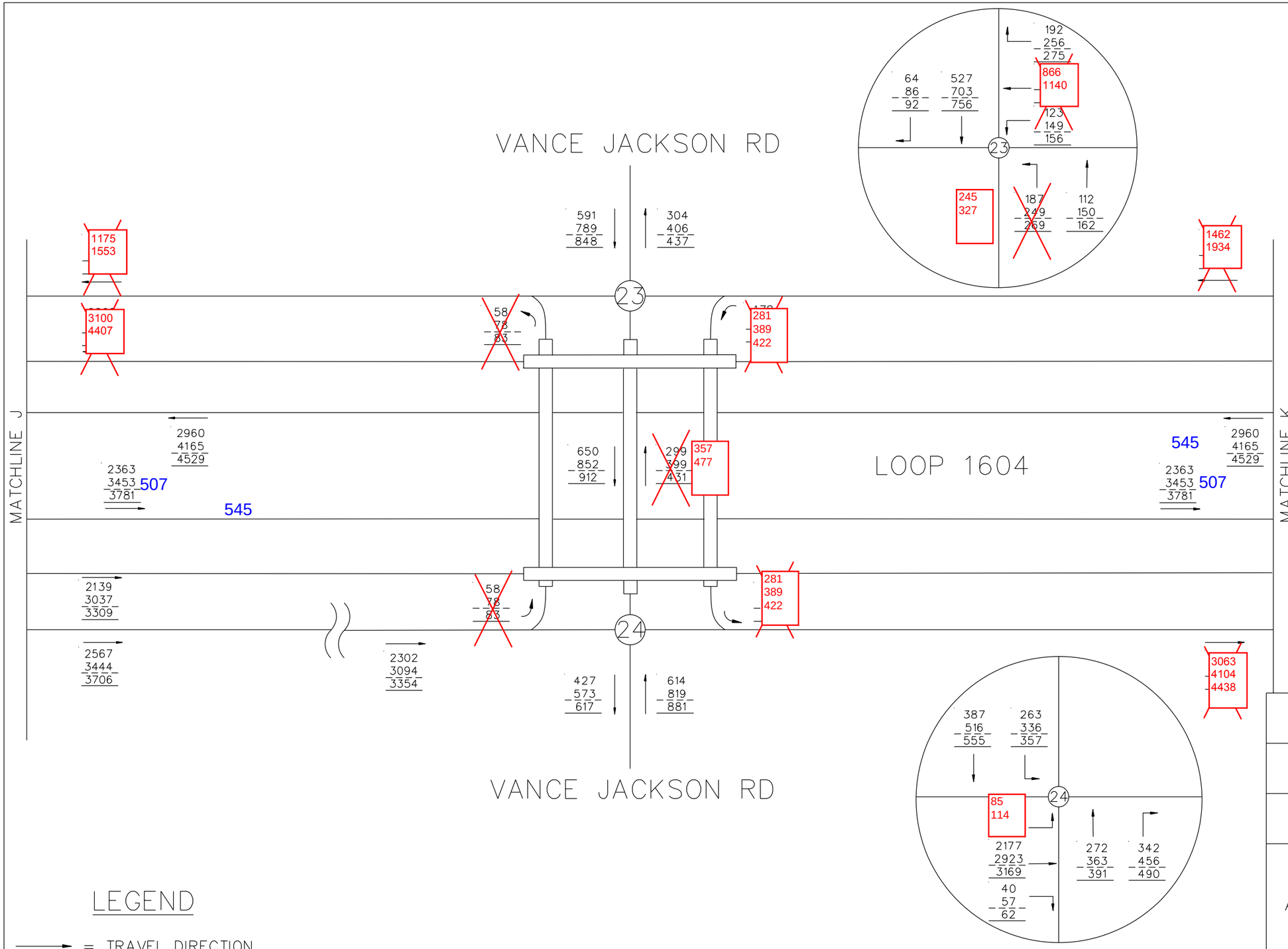

N.T.S.

LEGEND

→ = TRAVEL DIRECTION

XXXXX = YEAR 2025 AM PEAK TRAFFIC

XXXXX = YEAR 2045 AM PEAK TRAFFIC

XXXXX = YEAR 2055 AM PEAK TRAFFIC

INTERIM REVIEW

THIS DOCUMENT IS RELEASED FOR THE PURPOSE OF INTERIM REVIEW UNDER THE AUTHORITY OF

ANDREW J. BALLARD, PE 59027 JUNE 28, 2019

IT IS NOT TO BE USED FOR CONSTRUCTION PURPOSES.

© 2018

Texas Department of Transportation

TEDSI INFRASTRUCTURE GROUP
Consulting Engineers
1201 E. Expressway 83
Mission, Texas 78572
(956) 424-7898
TBPE F-1640

JACOBS
JACOBS ENGINEERING GROUP INC. FIRM #2966

LOOP 1604
AM PEAK TRAFFIC PROJECTIONS
BUILD CONDITION

SHEET 11 OF 34

DESIGN CK	FED.RD. DIV.NO.			HIGHWAY NO.
				LOOP 1604
CHECK PK	STATE	DISTRICT	COUNTY	SHEET NO.
GRAPHICS CC	TX	SAN ANTONIO	BEXAR	11
CHECK PK	CONTROL	SECTION	JOB	
	2452	01	068	

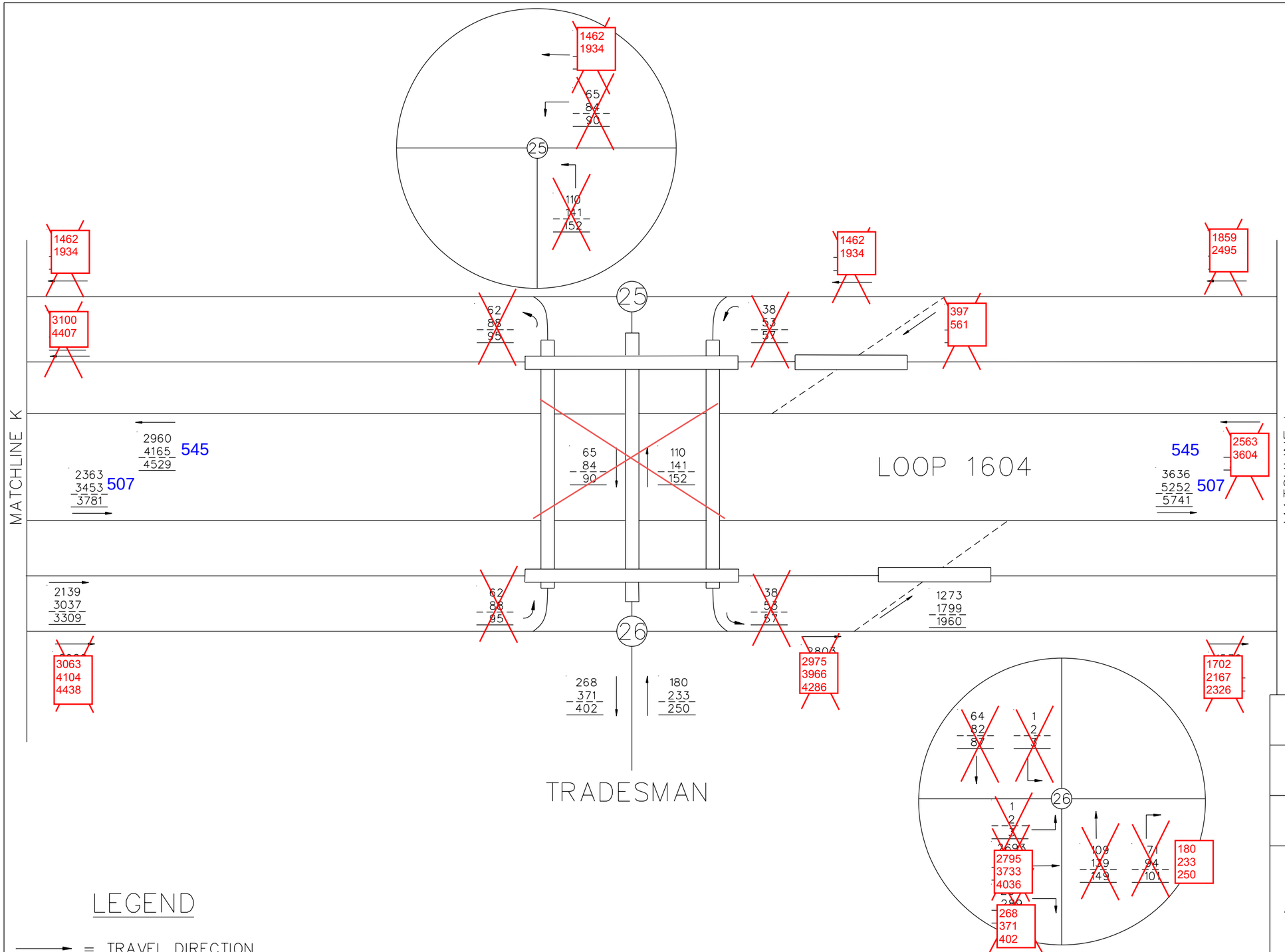

N.T.S.

LEGEND

→ = TRAVEL DIRECTION

XXXXX = YEAR 2025 AM PEAK TRAFFIC

XXXXX = YEAR 2045 AM PEAK TRAFFIC

XXXXX = YEAR 2055 AM PEAK TRAFFIC

INTERIM REVIEW

THIS DOCUMENT IS RELEASED FOR THE PURPOSE OF INTERIM REVIEW UNDER THE AUTHORITY OF

ANDREW J. BALLARD, PE 59027 JUNE 28, 2019

IT IS NOT TO BE USED FOR CONSTRUCTION PURPOSES.

© 2018

Texas Department of Transportation

TEDSI INFRASTRUCTURE GROUP
Consulting Engineers
1201 E. Expressway 83
Mission, Texas 78572
(956) 424-7898
TBPE F-1640

JACOBS
JACOBS ENGINEERING GROUP INC. FIRM #2966

LOOP 1604
AM PEAK TRAFFIC PROJECTIONS
BUILD CONDITION

SHEET 12 OF 34

DESIGN	FED.RD. DIV.NO.			HIGHWAY NO.
CK				LOOP 1604
CHECK	STATE	DISTRICT	COUNTY	SHEET NO.
PK	TX	SAN ANTONIO	BEXAR	12
GRAPHICS	CONTROL	SECTION	JOB	
CC	2452	01	068	
CHECK				
PK				

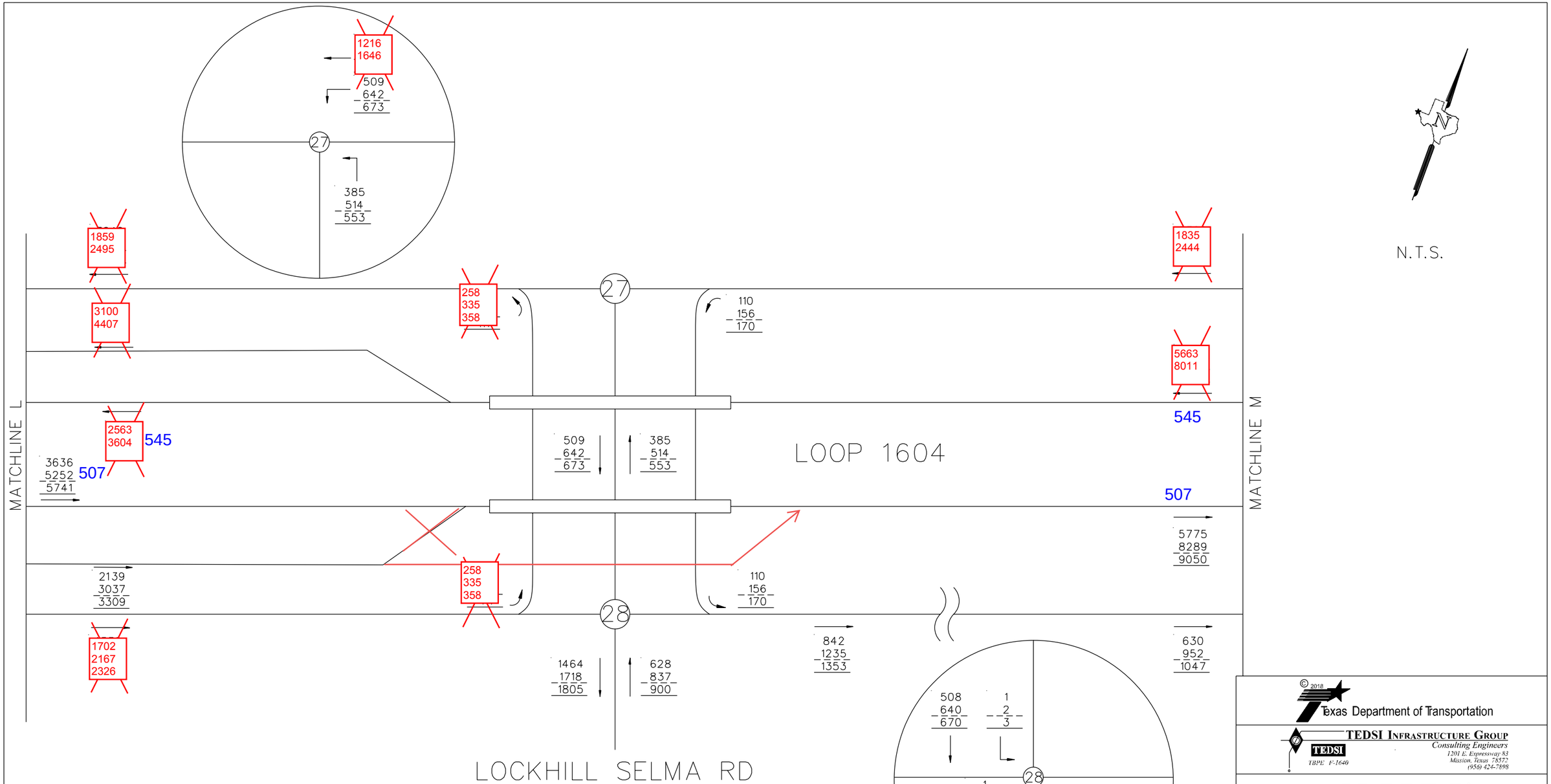

N.T.S.

LEGEND

→ = TRAVEL DIRECTION

XXXXX = YEAR 2025 AM PEAK TRAFFIC

XXXXX = YEAR 2045 AM PEAK TRAFFIC

XXXXX = YEAR 2055 AM PEAK TRAFFIC

INTERIM REVIEW

THIS DOCUMENT IS RELEASED FOR THE PURPOSE OF INTERIM REVIEW UNDER THE AUTHORITY OF ANDREW J. BALLARD, PE 59027 JUNE 28, 2019
IT IS NOT TO BE USED FOR CONSTRUCTION PURPOSES.

© 2018

Texas Department of Transportation

TEDSI INFRASTRUCTURE GROUP
Consulting Engineers
1201 E. Expressway 83
Mission, Texas 78572
(956) 424-7898
TBPE F-1640

JACOBS
JACOBS ENGINEERING GROUP INC. FIRM #2966

LOOP 1604
AM PEAK TRAFFIC PROJECTIONS
BUILD CONDITION

SHEET 13 OF 34

DESIGN CK	FED.RD. DIV.NO.			HIGHWAY NO.
CHECK PK				LOOP 1604
	STATE	DISTRICT	COUNTY	SHEET NO.
GRAPHICS CC	TX	SAN ANTONIO	BEXAR	13
CHECK PK	CONTROL	SECTION	JOB	
	2452	01	068	

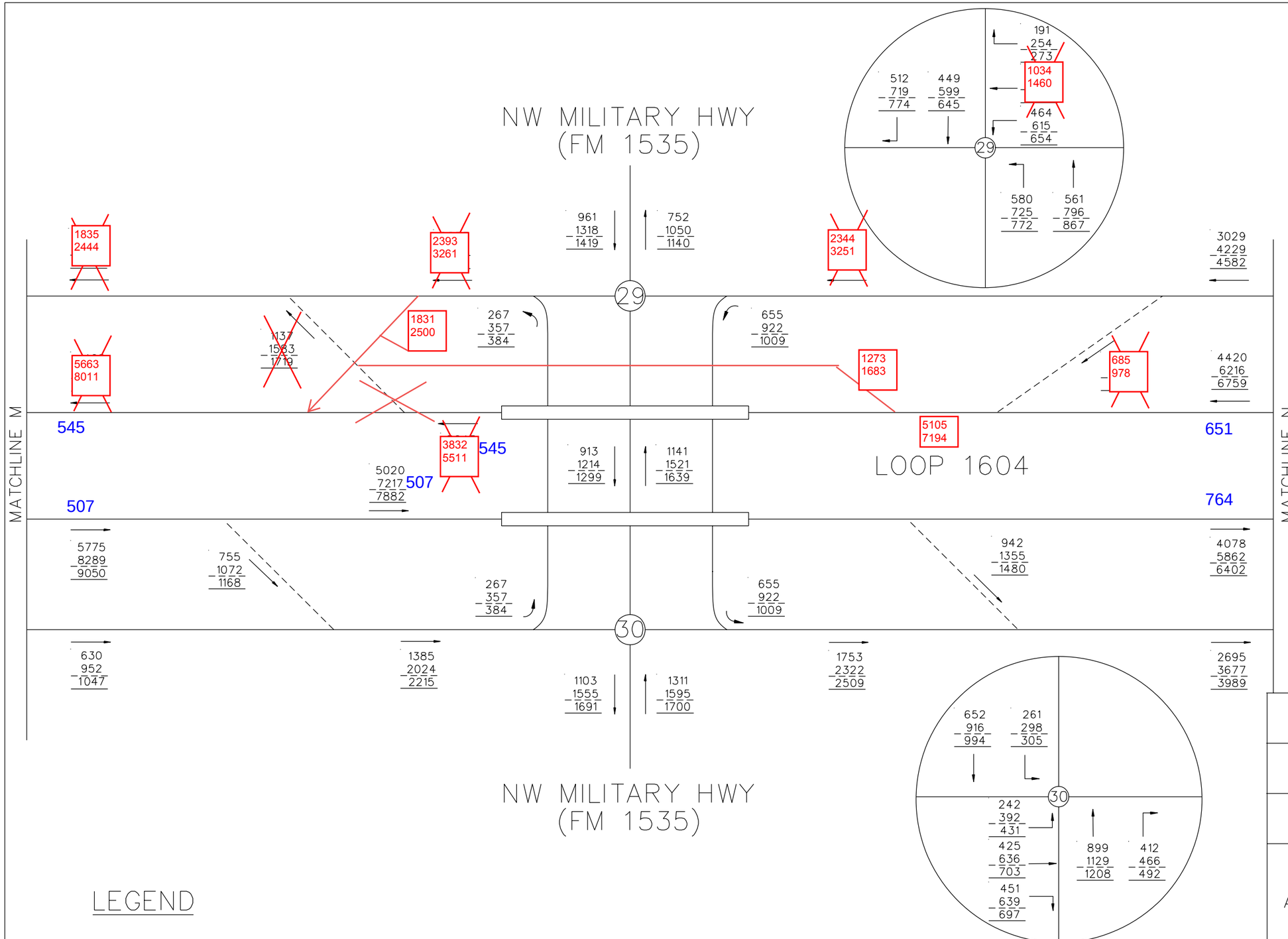

N.T.S.

LEGEND

→ = TRAVEL DIRECTION

XXXXX = YEAR 2025 AM PEAK TRAFFIC

XXXXX = YEAR 2045 AM PEAK TRAFFIC

XXXXX = YEAR 2055 AM PEAK TRAFFIC

INTERIM REVIEW

THIS DOCUMENT IS RELEASED FOR THE PURPOSE OF INTERIM REVIEW UNDER THE AUTHORITY OF

ANDREW J. BALLARD, PE 59027 JUNE 28, 2019

IT IS NOT TO BE USED FOR CONSTRUCTION PURPOSES.

© 2018

Texas Department of Transportation

TEDSI INFRASTRUCTURE GROUP
Consulting Engineers
TEDSI
TBPE F-1640
1201 E. Expressway 83
Mission, Texas 78572
(956) 424-7898

JACOBS®
JACOBS ENGINEERING GROUP INC. FIRM #2966

LOOP 1604
AM PEAK TRAFFIC PROJECTIONS
BUILD CONDITION

SHEET 14 OF 34

DESIGN CK	FED.RD. DIV.NO.			HIGHWAY NO.
CHECK PK				LOOP 1604
	STATE	DISTRICT	COUNTY	SHEET NO.
GRAPHICS CC	TX	SAN ANTONIO	BEXAR	14
CHECK PK	CONTROL	SECTION	JOB	
	2452	01	068	

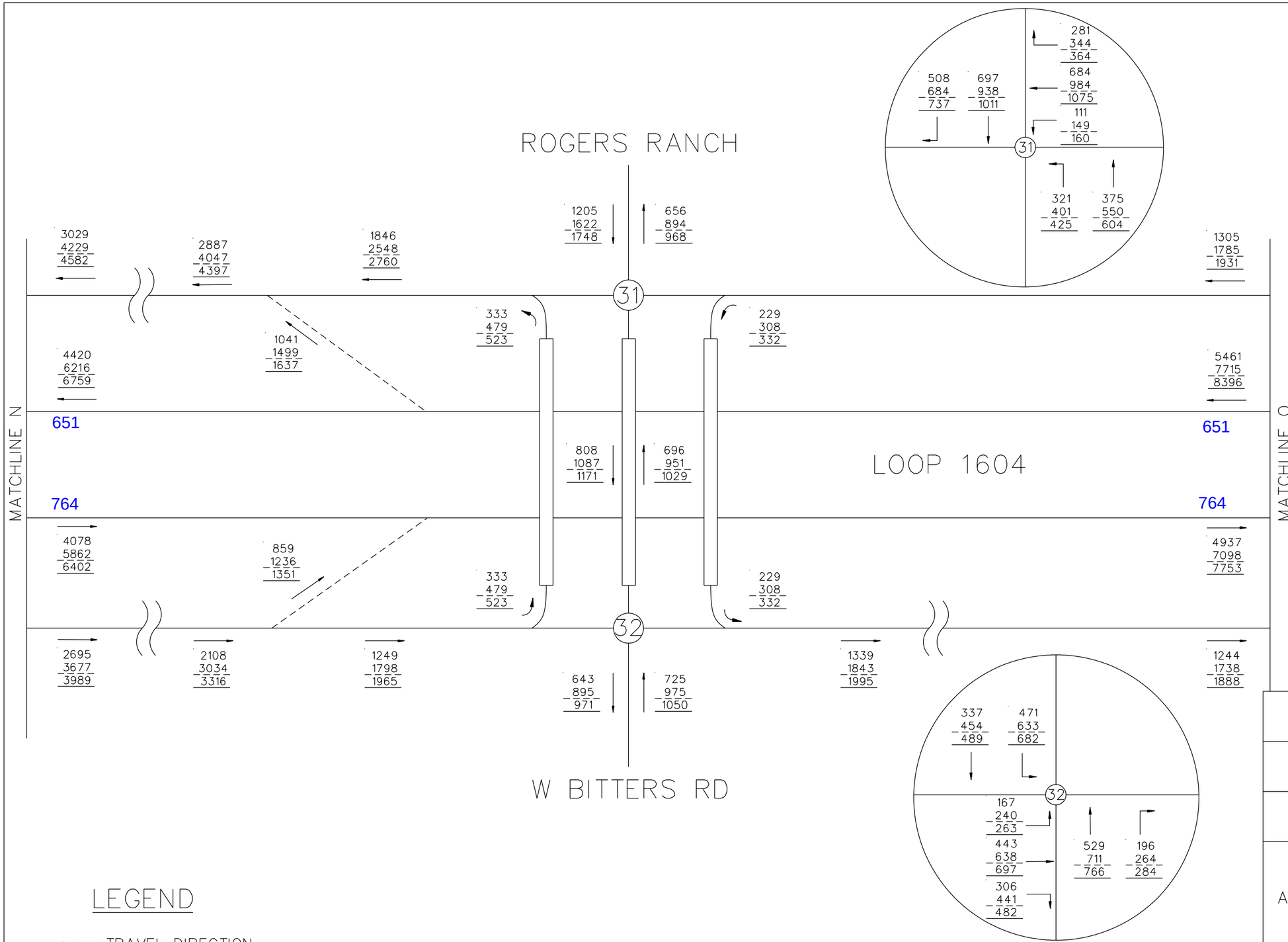

N.T.S.

LEGEND

→ = TRAVEL DIRECTION

XXXXX = YEAR 2025 AM PEAK TRAFFIC

XXXXX = YEAR 2045 AM PEAK TRAFFIC

XXXXX = YEAR 2055 AM PEAK TRAFFIC

INTERIM REVIEW

THIS DOCUMENT IS RELEASED FOR THE PURPOSE OF INTERIM REVIEW UNDER THE AUTHORITY OF ANDREW J. BALLARD, PE 59027 JUNE 28, 2019
IT IS NOT TO BE USED FOR CONSTRUCTION PURPOSES.

© 2018

Texas Department of Transportation

TEDSI INFRASTRUCTURE GROUP
Consulting Engineers
1201 E. Expressway 83
Mission, Texas 78572
(956) 424-7898
TBPE F-1640

JACOBS®
JACOBS ENGINEERING GROUP INC. FIRM #2966

LOOP 1604
AM PEAK TRAFFIC PROJECTIONS
BUILD CONDITION

SHEET 15 OF 34

DESIGN CK	FED.RD. DIV.NO.			HIGHWAY NO.
CHECK PK				LOOP 1604
	STATE	DISTRICT	COUNTY	SHEET NO.
GRAPHICS CC	TX	SAN ANTONIO	BEXAR	15
CHECK PK	CONTROL	SECTION	JOB	
	2452	01	068	

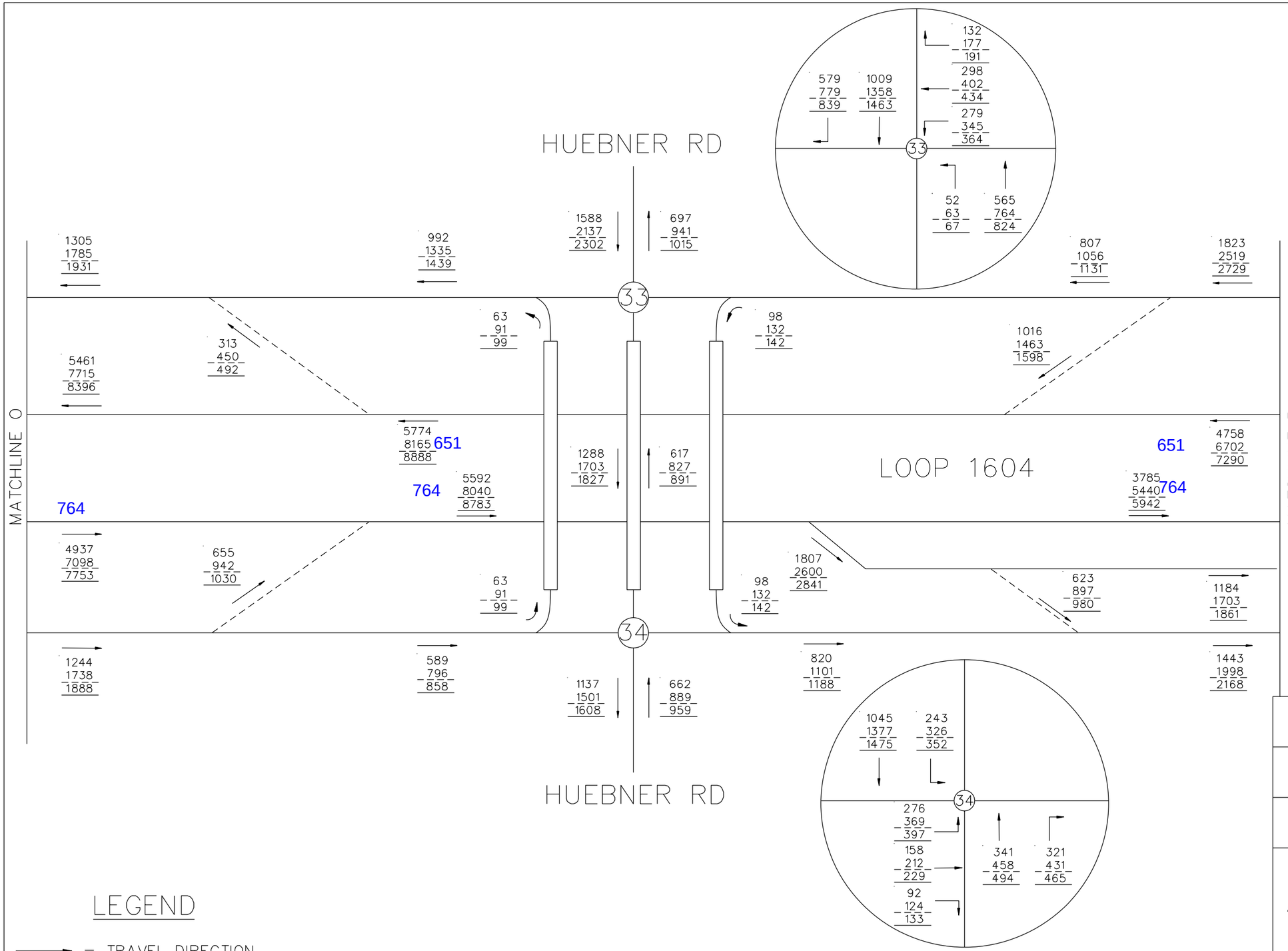

N.T.S.

LEGEND

→ = TRAVEL DIRECTION

XXXXX = YEAR 2025 AM PEAK TRAFFIC

XXXXX = YEAR 2045 AM PEAK TRAFFIC

XXXXX = YEAR 2055 AM PEAK TRAFFIC

INTERIM REVIEW

THIS DOCUMENT IS RELEASED FOR THE PURPOSE OF INTERIM REVIEW UNDER THE AUTHORITY OF

ANDREW J. BALLARD, PE 59027 JUNE 28, 2019

IT IS NOT TO BE USED FOR CONSTRUCTION PURPOSES.

© 2018

Texas Department of Transportation

TEDSI INFRASTRUCTURE GROUP
Consulting Engineers
1201 E. Expressway 83
Mission, Texas 78572
(956) 424-7898
TBPE F-1640

JACOBS
JACOBS ENGINEERING GROUP INC. FIRM #2966

LOOP 1604
AM PEAK TRAFFIC PROJECTIONS
BUILD CONDITION

SHEET 16 OF 34

DESIGN CK	FED.RD. DIV.NO.			HIGHWAY NO.
CHECK PK				LOOP 1604
	STATE	DISTRICT	COUNTY	SHEET NO.
GRAPHICS CC	TX	SAN ANTONIO	BEXAR	16
CHECK PK	CONTROL	SECTION	JOB	
	2452	01	068	

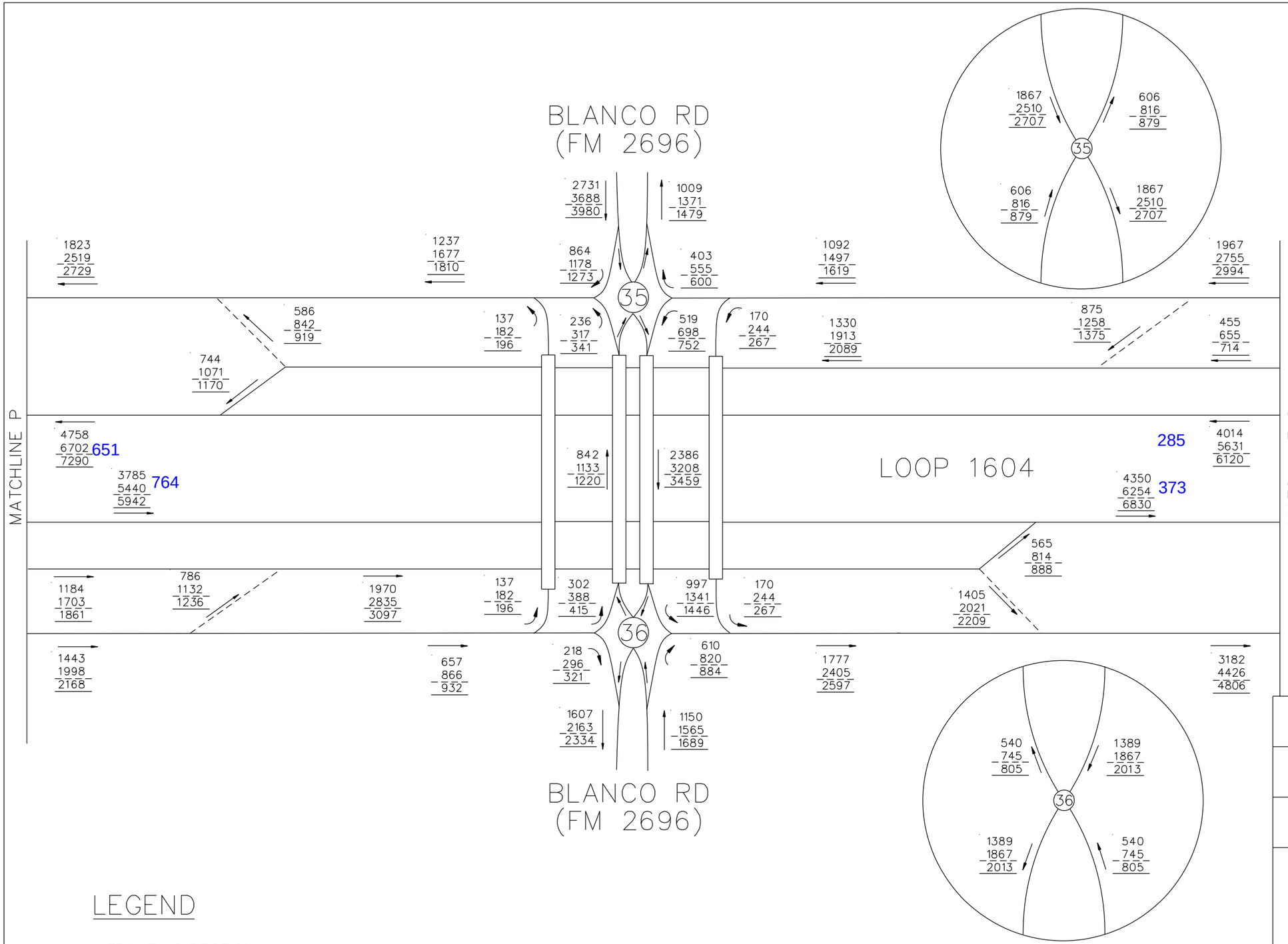

LEGEND

→ = TRAVEL DIRECTION

XXXXX = YEAR 2025 AM PEAK TRAFFIC

XXXXX = YEAR 2045 AM PEAK TRAFFIC

XXXXX = YEAR 2055 AM PEAK TRAFFIC

INTERIM REVIEW

THIS DOCUMENT IS RELEASED FOR THE PURPOSE OF INTERIM REVIEW UNDER THE AUTHORITY OF

ANDREW J. BALLARD, PE 59027 JUNE 28, 2019

IT IS NOT TO BE USED FOR CONSTRUCTION PURPOSES.

© 2018

Texas Department of Transportation

TEDSI INFRASTRUCTURE GROUP
Consulting Engineers
TBPE F-1640
1201 E. Expressway 83
Mission, Texas 78572
(956) 424-7898

JACOBS
JACOBS ENGINEERING GROUP INC. FIRM •2966

LOOP 1604
AM PEAK TRAFFIC PROJECTIONS
BUILD CONDITION

SHEET 17 OF 34

DESIGN CK	FED.RD. DIV.NO.			HIGHWAY NO.
				LOOP 1604
CHECK PK	STATE	DISTRICT	COUNTY	SHEET NO.
GRAPHICS CC	TX	SAN ANTONIO	BEXAR	17
	CONTROL	SECTION	JOB	
CHECK PK	2452	01	068	

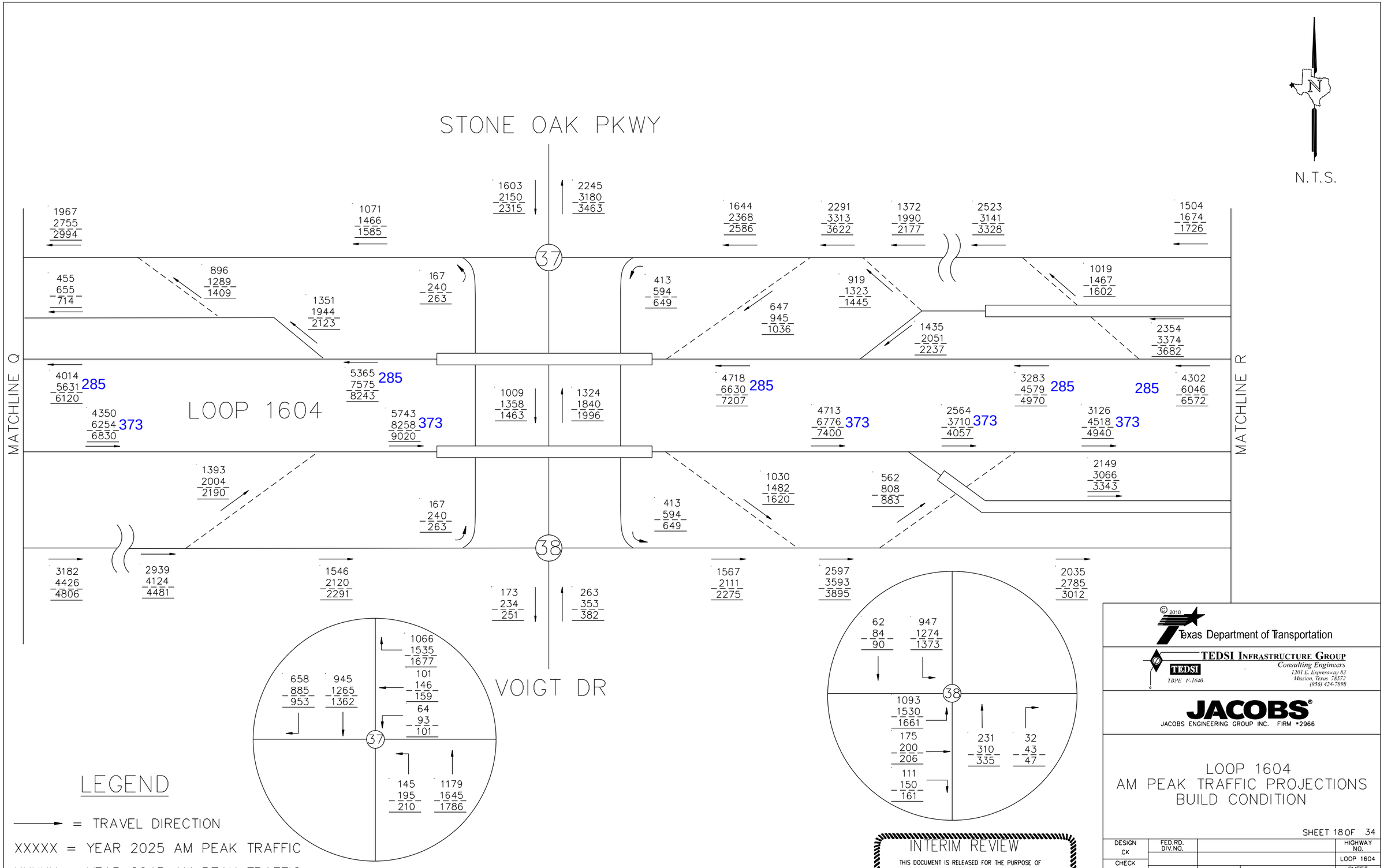
N.T.S.
STONE OAK PKWY
LOOP 1604
VOIGT DR
MATCHLINE Q
MATCHLINE R
37
38
1967 2755 2994
1071 1466 1585
1603 2150 2315
2245 3180 3463
1644 2368 2586
2291 3313 3622
1372 1990 2177
2523 3141 3328
1504 1674 1726
455 655 714
896 1289 1409
1351 1944 2123
167 240 263
413 594 649
647 945 1036
919 1323 1445
1435 2051 2237
1019 1467 1602
2354 3374 3682
4014 5631 6120 285
4350 6254 6830 373
5365 7575 8243 285
5743 8258 9020 373
1009 1358 1463
1324 1840 1996
4718 6630 7207 285
4713 6776 7400 373
2564 3710 4057 373
3283 4579 4970 285
3126 4518 4940 373
285
4302 6046 6572
1393 2004 2190
167 240 263
413 594 649
1030 1482 1620
562 808 883
2149 3066 3343
3182 4426 4806
2939 4124 4481
1546 2120 2291
173 234 251
263 353 382
1567 2111 2275
2597 3593 3895
2035 2785 3012
1066 1535 1677
101 146 159
64 93 101
658 885 953
945 1265 1362
145 195 210
1179 1645 1786
62 84 90
947 1274 1373
1093 1530 1661
175 200 206
111 150 161
231 310 335
32 43 47
LEGEND
= TRAVEL DIRECTION
XXXXX = YEAR 2025 AM PEAK TRAFFIC
XXXXX = YEAR 2045 AM PEAK TRAFFIC
XXXXX = YEAR 2055 AM PEAK TRAFFIC
INTERIM REVIEW
THIS DOCUMENT IS RELEASED FOR THE PURPOSE OF INTERIM REVIEW UNDER THE AUTHORITY OF
ANDREW J. BALLARD, PE 59027 JUNE 28, 2019
IT IS NOT TO BE USED FOR CONSTRUCTION PURPOSES.
© 2018
Texas Department of Transportation
TEDSI INFRASTRUCTURE GROUP
Consulting Engineers
1201 E. Expressway 83
Mission, Texas 78572
(956) 424-7898
TBPE F-1640
JACOBS
JACOBS ENGINEERING GROUP INC. FIRM #2966
LOOP 1604
AM PEAK TRAFFIC PROJECTIONS
BUILD CONDITION
SHEET 18 OF 34
DESIGN CK
FED.RD. DIV.NO.
HIGHWAY NO.
LOOP 1604
CHECK PK
STATE
DISTRICT
COUNTY
SHEET NO.
GRAPHICS CC
TX
SAN ANTONIO
BEXAR
CONTROL
SECTION
JOB
CHECK PK
2452
01
068
18

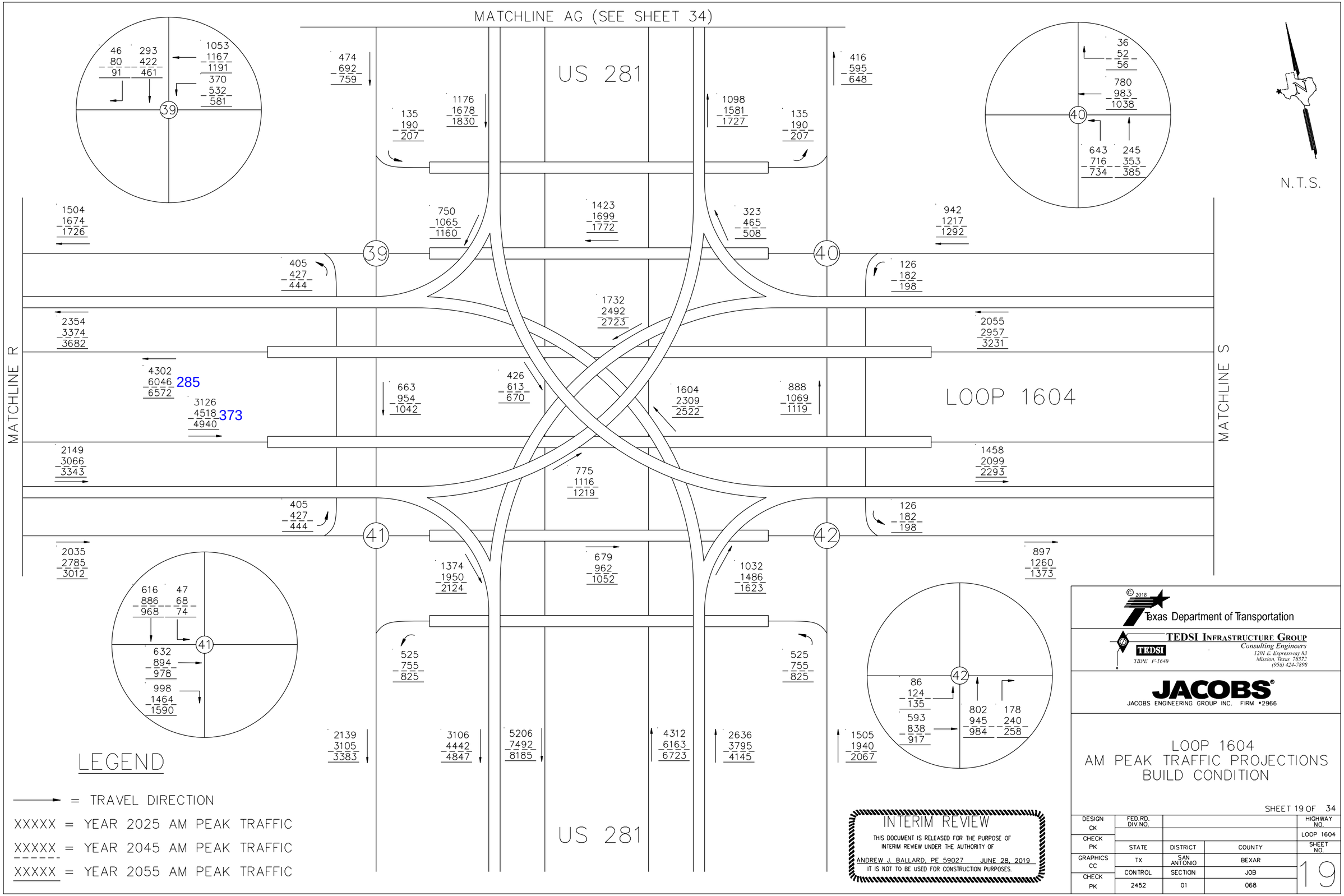
MATCHLINE AG (SEE SHEET 34)
US 281
LOOP 1604
MATCHLINE R
MATCHLINE S
N.T.S.
39
40
41
42
46 80 91
293 422 461
1053 1167 1191
370 532 581
36 52 56
780 983 1038
643 716 734
245 353 385
616 886 968
47 68 74
632 894 978
998 1464 1590
86 124 135
593 838 917
802 945 984
178 240 258
474 692 759
416 595 648
135 190 207
1176 1678 1830
1098 1581 1727
1504 1674 1726
750 1065 1160
1423 1699 1772
323 465 508
942 1217 1292
405 427 444
126 182 198
1732 2492 2723
2354 3374 3682
2055 2957 3231
4302 6046 6572
285
3126 4518 4940
373
663 954 1042
426 613 670
1604 2309 2522
888 1069 1119
2149 3066 3343
1458 2099 2293
775 1116 1219
405 427 444
126 182 198
2035 2785 3012
897 1260 1373
1374 1950 2124
679 962 1052
1032 1486 1623
525 755 825
525 755 825
2139 3105 3383
3106 4442 4847
5206 7492 8185
4312 6163 6723
2636 3795 4145
1505 1940 2067
LEGEND
= TRAVEL DIRECTION
XXXXX = YEAR 2025 AM PEAK TRAFFIC
XXXXX = YEAR 2045 AM PEAK TRAFFIC
XXXXX = YEAR 2055 AM PEAK TRAFFIC
INTERIM REVIEW
THIS DOCUMENT IS RELEASED FOR THE PURPOSE OF INTERIM REVIEW UNDER THE AUTHORITY OF
ANDREW J. BALLARD, PE 59027 JUNE 28, 2019
IT IS NOT TO BE USED FOR CONSTRUCTION PURPOSES.
© 2018
Texas Department of Transportation
TEDSI INFRASTRUCTURE GROUP
Consulting Engineers
1201 E. Expressway 83
Mission, Texas 78572
(956) 424-7898
TBPE F-1640
JACOBS
JACOBS ENGINEERING GROUP INC. FIRM •2966
LOOP 1604
AM PEAK TRAFFIC PROJECTIONS
BUILD CONDITION
SHEET 19 OF 34
DESIGN CK
CHECK PK
GRAPHICS CC
CHECK PK
FED.RD. DIV.NO.
STATE
TX
CONTROL
2452
DISTRICT
01
SAN ANTONIO
COUNTY
BEXAR
SECTION
JOB
068
HIGHWAY NO.
LOOP 1604
SHEET NO.
19

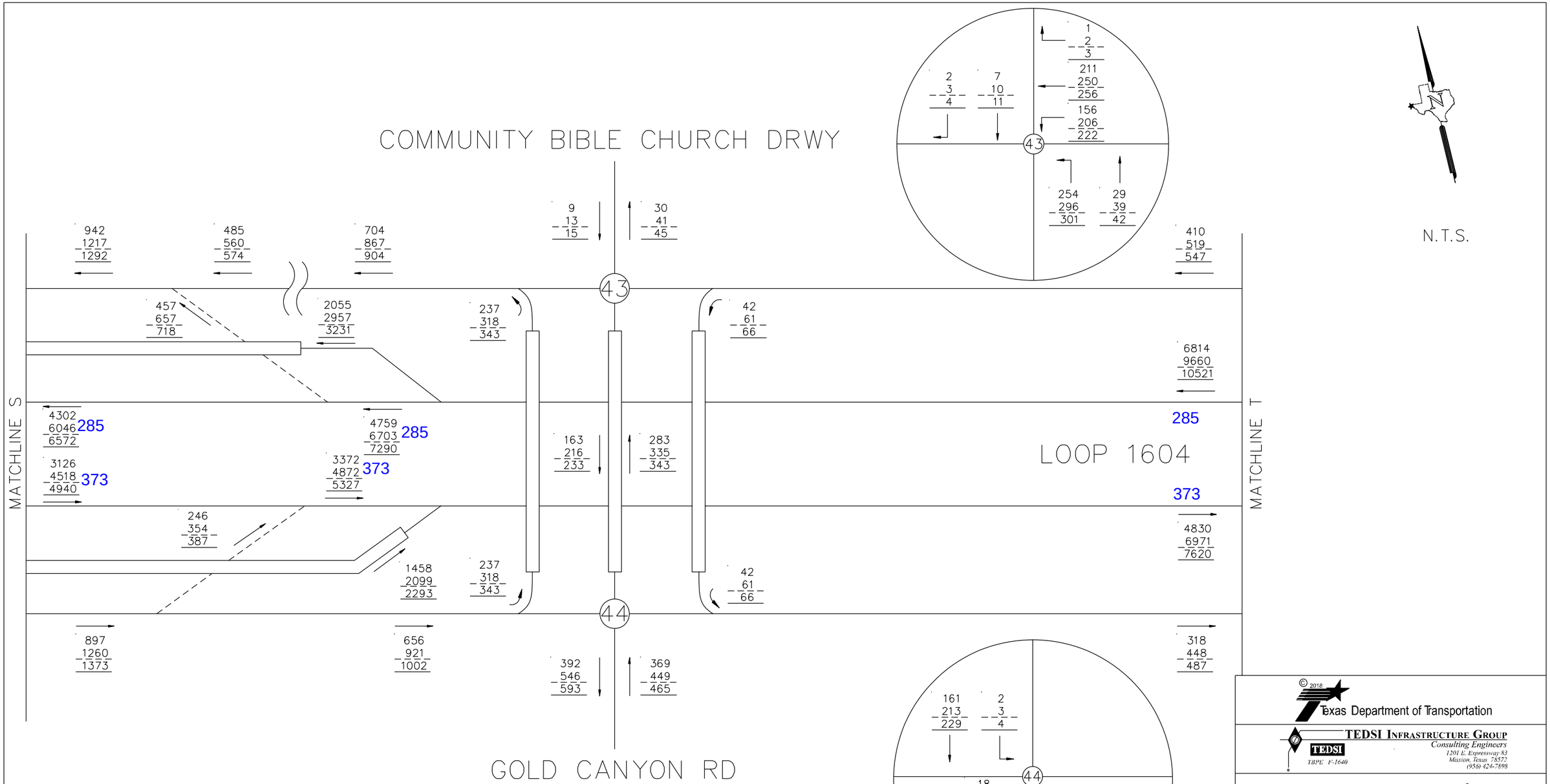

LEGEND

→ = TRAVEL DIRECTION

XXXXX = YEAR 2025 AM PEAK TRAFFIC

XXXXX = YEAR 2045 AM PEAK TRAFFIC

XXXXX = YEAR 2055 AM PEAK TRAFFIC

INTERIM REVIEW

THIS DOCUMENT IS RELEASED FOR THE PURPOSE OF INTERIM REVIEW UNDER THE AUTHORITY OF

ANDREW J. BALLARD, PE 59027 JUNE 28, 2019

IT IS NOT TO BE USED FOR CONSTRUCTION PURPOSES.

© 2018

Texas Department of Transportation

TEDSI INFRASTRUCTURE GROUP
Consulting Engineers
1201 E. Expressway 83
Mission, Texas 78572
(956) 424-7898
TBPE F-1640

JACOBS®
JACOBS ENGINEERING GROUP INC. FIRM #2966

LOOP 1604
AM PEAK TRAFFIC PROJECTIONS
BUILD CONDITION

SHEET 20 OF 34

DESIGN CK	FED.RD. DIV.NO.			HIGHWAY NO.
CHECK PK				LOOP 1604
	STATE	DISTRICT	COUNTY	SHEET NO.
GRAPHICS CC	TX	SAN ANTONIO	BEXAR	20
CHECK PK	CONTROL	SECTION	JOB	
	2452	01	068	

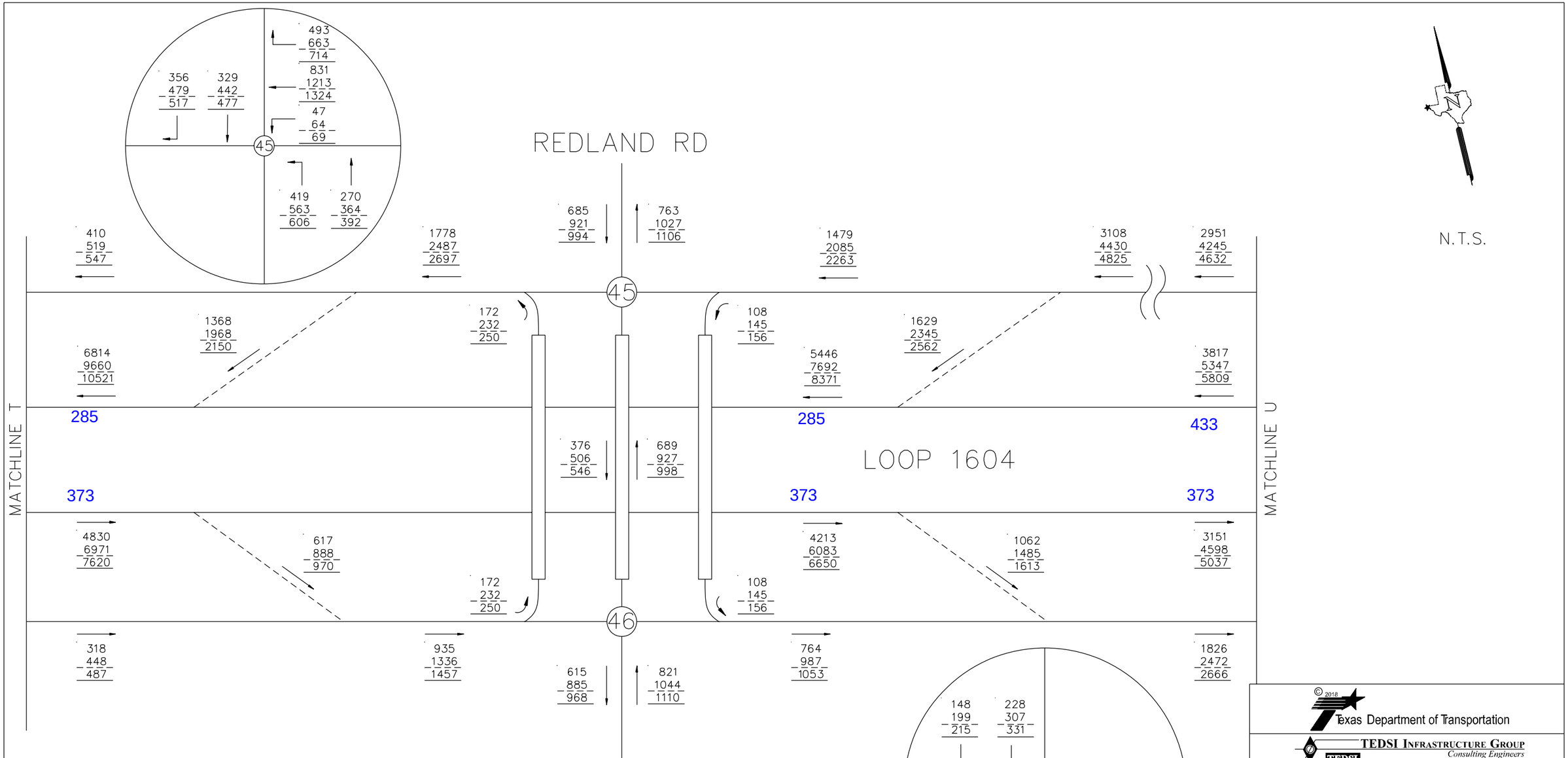

LEGEND

→ = TRAVEL DIRECTION

XXXXX = YEAR 2025 AM PEAK TRAFFIC

XXXXX = YEAR 2045 AM PEAK TRAFFIC

XXXXX = YEAR 2055 AM PEAK TRAFFIC

INTERIM REVIEW

THIS DOCUMENT IS RELEASED FOR THE PURPOSE OF INTERIM REVIEW UNDER THE AUTHORITY OF

ANDREW J. BALLARD, PE 59027 JUNE 28, 2019

IT IS NOT TO BE USED FOR CONSTRUCTION PURPOSES.

© 2018 Texas Department of Transportation

TEDSI INFRASTRUCTURE GROUP
Consulting Engineers
1201 E. Expressway 83
Mission, Texas 78572
(956) 424-7898
TBPE F-1640

JACOBS®
JACOBS ENGINEERING GROUP INC. FIRM #2966

LOOP 1604
AM PEAK TRAFFIC PROJECTIONS
BUILD CONDITION

SHEET 21 OF 34

DESIGN	FED.RD. DIV.NO.			HIGHWAY NO.
CK				LOOP 1604
CHECK	STATE	DISTRICT	COUNTY	SHEET NO.
PK	TX	SAN ANTONIO	BEXAR	21
GRAPHICS	CONTROL	SECTION	JOB	
CC	2452	01	068	
CHECK				
PK				

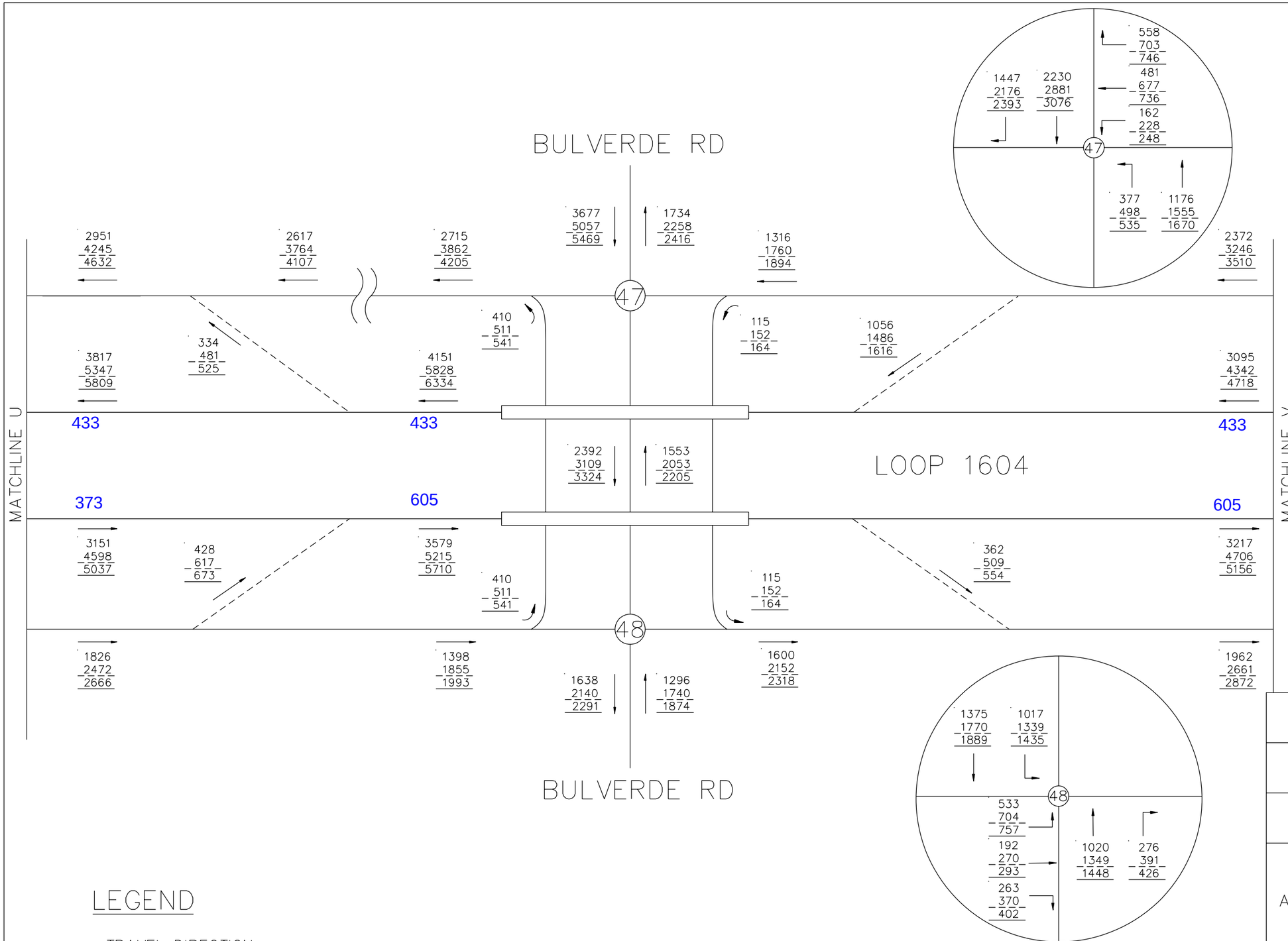

N.T.S.

LEGEND

→ = TRAVEL DIRECTION

XXXXX = YEAR 2025 AM PEAK TRAFFIC

XXXXX = YEAR 2045 AM PEAK TRAFFIC

XXXXX = YEAR 2055 AM PEAK TRAFFIC

INTERIM REVIEW

THIS DOCUMENT IS RELEASED FOR THE PURPOSE OF INTERIM REVIEW UNDER THE AUTHORITY OF

ANDREW J. BALLARD, PE 59027 JUNE 28, 2019

IT IS NOT TO BE USED FOR CONSTRUCTION PURPOSES.

© 2018

Texas Department of Transportation

TEDSI INFRASTRUCTURE GROUP
Consulting Engineers
1201 E. Expressway 83
Mission, Texas 78572
(956) 424-7898
TBPE F-1640

JACOBS
JACOBS ENGINEERING GROUP INC. FIRM #2966

LOOP 1604
AM PEAK TRAFFIC PROJECTIONS
BUILD CONDITION

SHEET 22 OF 34

DESIGN CK	FED.RD. DIV.NO.			HIGHWAY NO.
CHECK PK				LOOP 1604
	STATE	DISTRICT	COUNTY	SHEET NO.
GRAPHICS CC	TX	SAN ANTONIO	BEXAR	22
CHECK PK	CONTROL	SECTION	JOB	
	2452	01	068	

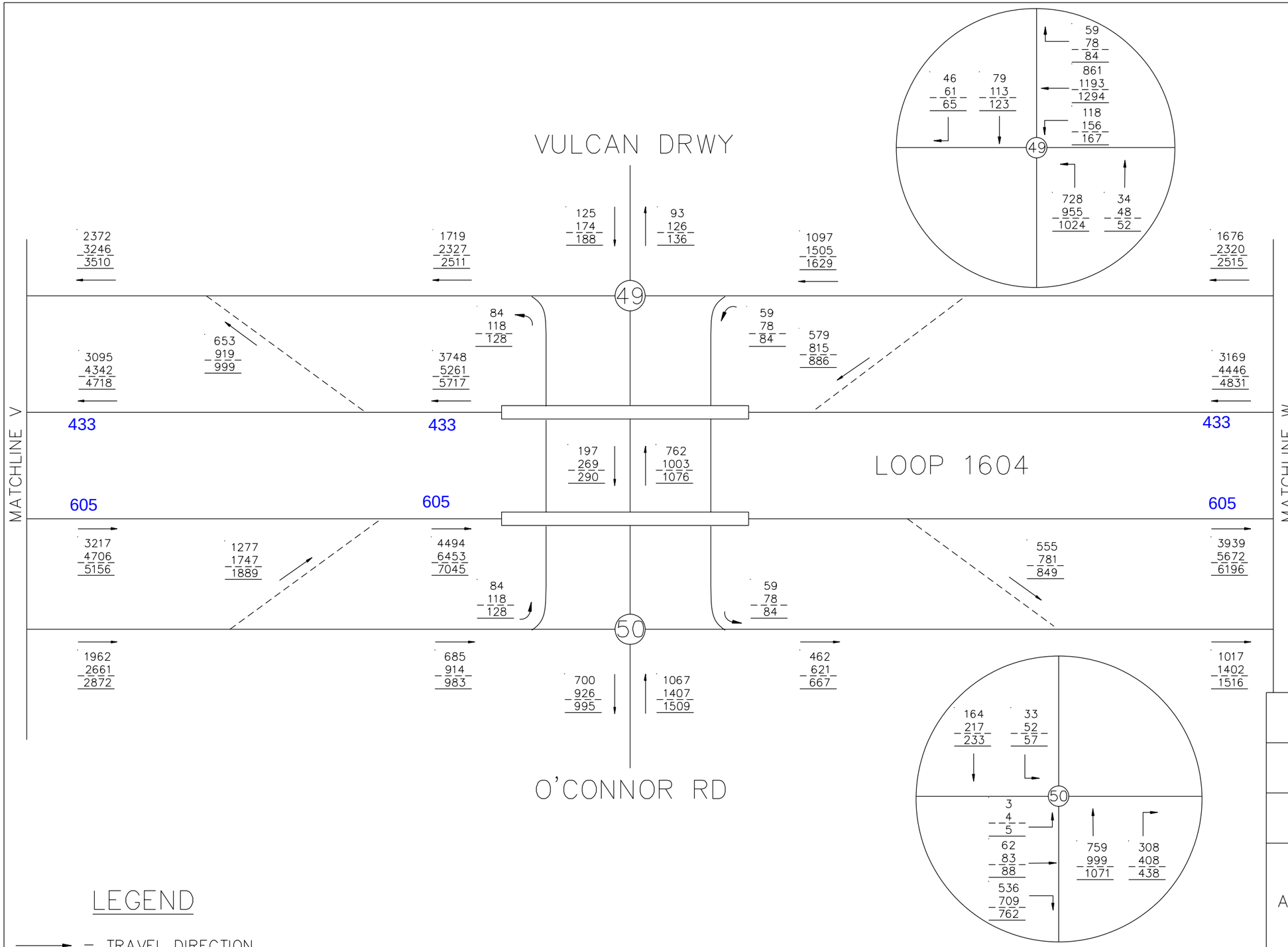

N.T.S.

LEGEND

→ = TRAVEL DIRECTION

XXXXX = YEAR 2025 AM PEAK TRAFFIC

XXXXX = YEAR 2045 AM PEAK TRAFFIC

XXXXX = YEAR 2055 AM PEAK TRAFFIC

INTERIM REVIEW

THIS DOCUMENT IS RELEASED FOR THE PURPOSE OF INTERIM REVIEW UNDER THE AUTHORITY OF

ANDREW J. BALLARD, PE 59027 JUNE 28, 2019

IT IS NOT TO BE USED FOR CONSTRUCTION PURPOSES.

© 2018

Texas Department of Transportation

TEDSI INFRASTRUCTURE GROUP
Consulting Engineers
1201 E. Expressway 83
Mission, Texas 78572
(956) 424-7898
TBPE F-1640

JACOBS
JACOBS ENGINEERING GROUP INC. FIRM #2966

LOOP 1604
AM PEAK TRAFFIC PROJECTIONS
BUILD CONDITION

SHEET 23 OF 34

DESIGN	FED.RD. DIV.NO.			HIGHWAY NO.
CK				LOOP 1604
CHECK	STATE	DISTRICT	COUNTY	SHEET NO.
PK	TX	SAN ANTONIO	BEXAR	23
GRAPHICS	CONTROL	SECTION	JOB	
CC	2452	01	068	
CHECK				
PK				

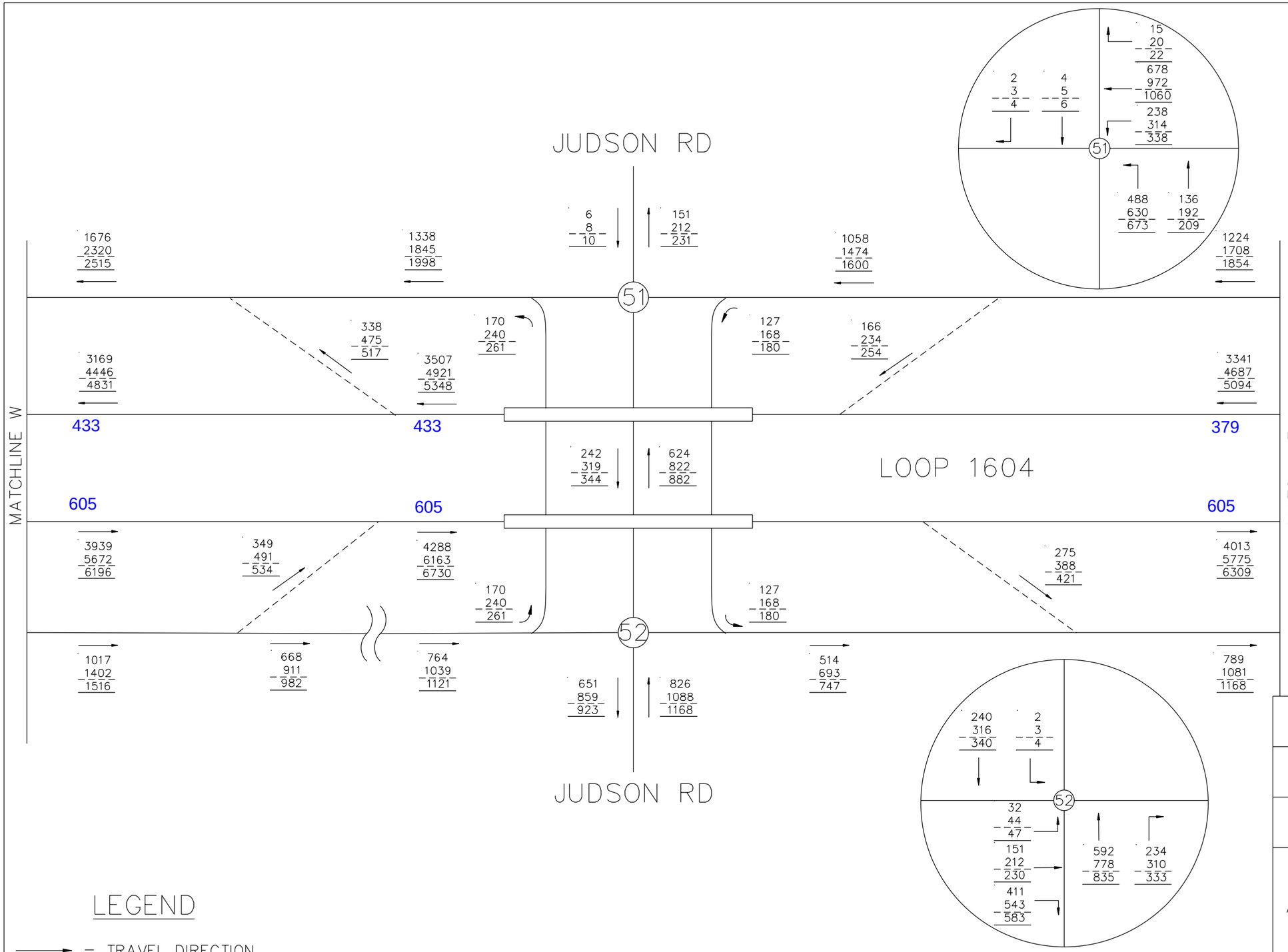

N.T.S.

LEGEND

→ = TRAVEL DIRECTION

XXXXX = YEAR 2025 AM PEAK TRAFFIC

XXXXX = YEAR 2045 AM PEAK TRAFFIC

XXXXX = YEAR 2055 AM PEAK TRAFFIC

INTERIM REVIEW

THIS DOCUMENT IS RELEASED FOR THE PURPOSE OF INTERIM REVIEW UNDER THE AUTHORITY OF

ANDREW J. BALLARD, PE 59027 JUNE 28, 2019

IT IS NOT TO BE USED FOR CONSTRUCTION PURPOSES.

© 2018

Texas Department of Transportation

TEDSI INFRASTRUCTURE GROUP
Consulting Engineers
1201 E. Expressway 83
Mission, Texas 78572
(956) 424-7898
TBPE F-1640

JACOBS
JACOBS ENGINEERING GROUP INC. FIRM #2966

LOOP 1604
AM PEAK TRAFFIC PROJECTIONS
BUILD CONDITION

SHEET 24 OF 34

DESIGN CK	FED.RD. DIV.NO.			HIGHWAY NO.
				LOOP 1604
CHECK PK	STATE	DISTRICT	COUNTY	SHEET NO.
GRAPHICS CC	TX	SAN ANTONIO	BEXAR	24
	CONTROL	SECTION	JOB	
CHECK PK	2452	01	068	

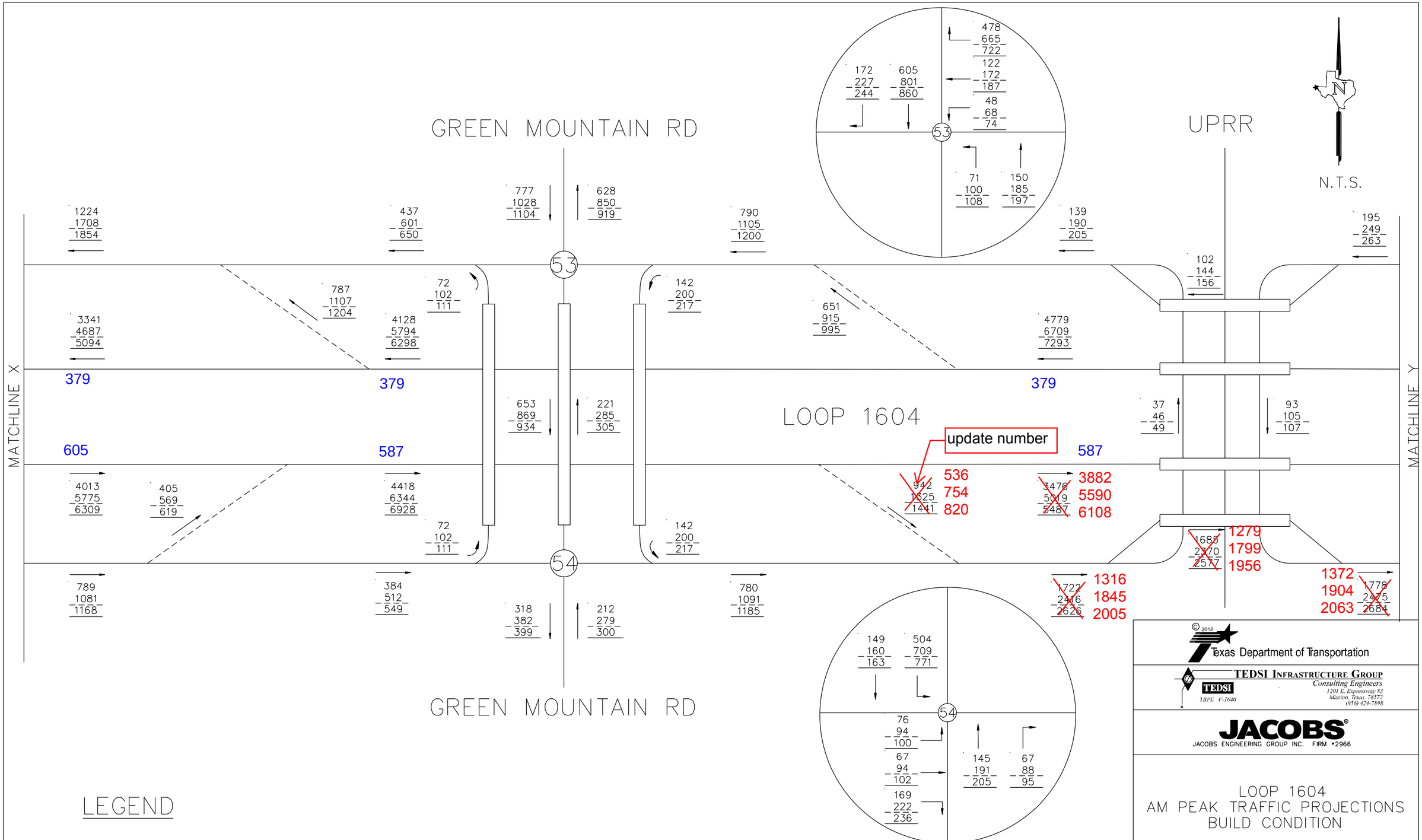

LEGEND

→ = TRAVEL DIRECTION

XXXXX = YEAR 2025 AM PEAK TRAFFIC

XXXXX = YEAR 2045 AM PEAK TRAFFIC

XXXXX = YEAR 2055 AM PEAK TRAFFIC

INTERIM REVIEW

THIS DOCUMENT IS RELEASED FOR THE PURPOSE OF INTERIM REVIEW UNDER THE AUTHORITY OF

ANDREW J. BALLARD, PE 59027 JUNE 28, 2019

IT IS NOT TO BE USED FOR CONSTRUCTION PURPOSES.

© 2018

Texas Department of Transportation

TEDSI INFRASTRUCTURE GROUP
Consulting Engineers
1201 E. Expressway 83
Mission, Texas 78572
(956) 424-7898
TBPE F-1640

JACOBS
JACOBS ENGINEERING GROUP INC. FIRM #2966

LOOP 1604
AM PEAK TRAFFIC PROJECTIONS
BUILD CONDITION

SHEET 25 OF 34

DESIGN CK	FED.RD. DIV.NO.			HIGHWAY NO.
CHECK PK				LOOP 1604
	STATE	DISTRICT	COUNTY	SHEET NO.
GRAPHICS CC	TX	SAN ANTONIO	BEXAR	25
	CONTROL	SECTION	JOB	
CHECK PK	2452	01	068	

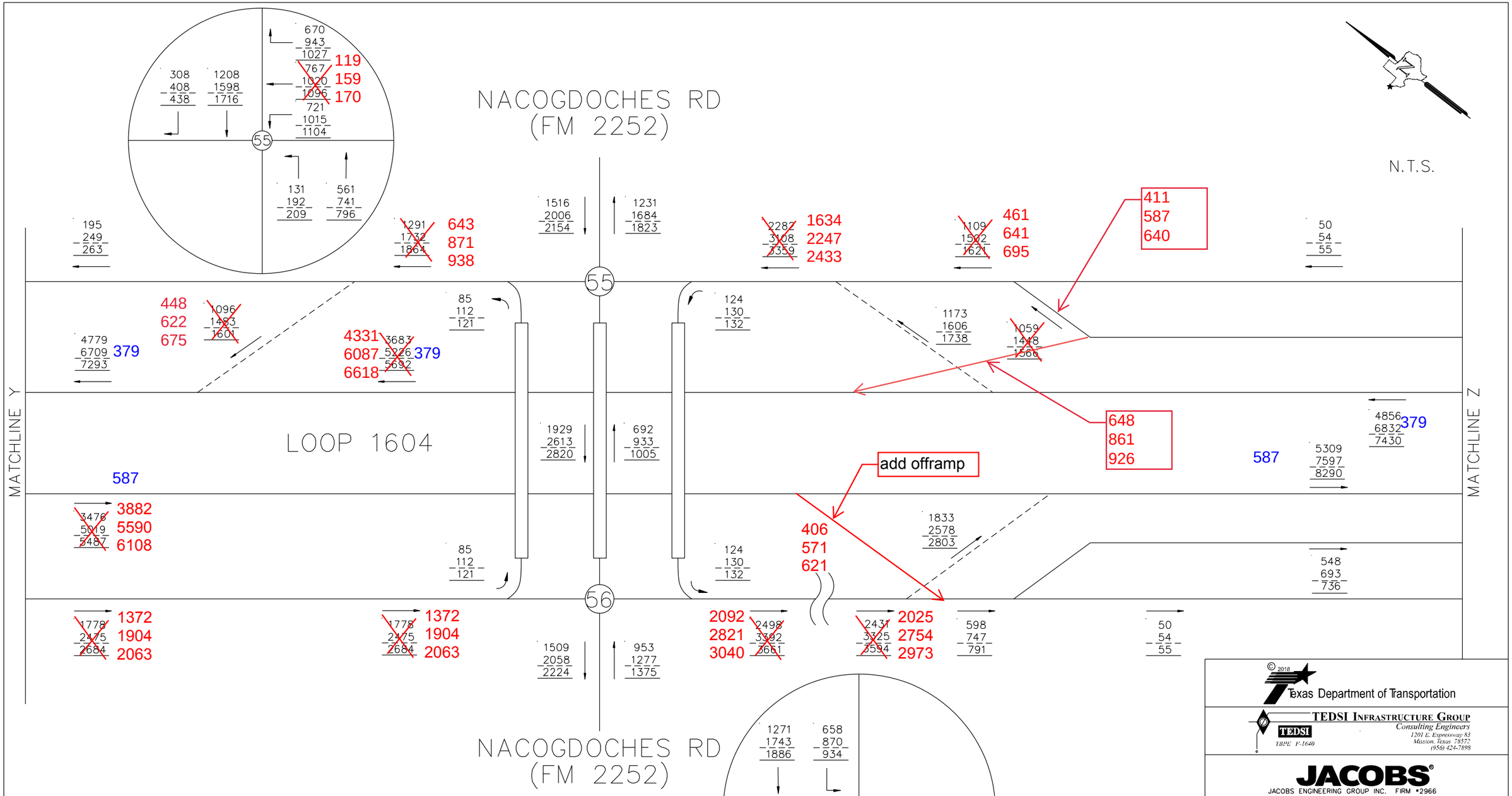

LEGEND

→ = TRAVEL DIRECTION

XXXXX = YEAR 2025 AM PEAK TRAFFIC

XXXXX = YEAR 2045 AM PEAK TRAFFIC

XXXXX = YEAR 2055 AM PEAK TRAFFIC

INTERIM REVIEW

THIS DOCUMENT IS RELEASED FOR THE PURPOSE OF INTERIM REVIEW UNDER THE AUTHORITY OF

ANDREW J. BALLARD, PE 59027 JUNE 28, 2019

IT IS NOT TO BE USED FOR CONSTRUCTION PURPOSES.

© 2018 Texas Department of Transportation

TEDSI INFRASTRUCTURE GROUP
Consulting Engineers
1201 E. Expressway 83
Mission, Texas 78572
(956) 424-7898
TBPE F-1640

JACOBS
JACOBS ENGINEERING GROUP INC. FIRM #2966

LOOP 1604
AM PEAK TRAFFIC PROJECTIONS
BUILD CONDITION

SHEET 26 OF 34

DESIGN CK	FED.RD. DIV.NO.			HIGHWAY NO.
				LOOP 1604
CHECK PK	STATE	DISTRICT	COUNTY	SHEET NO.
GRAPHICS CC	TX	SAN ANTONIO	BEXAR	26
	CONTROL	SECTION	JOB	
CHECK PK	2452	01	068	

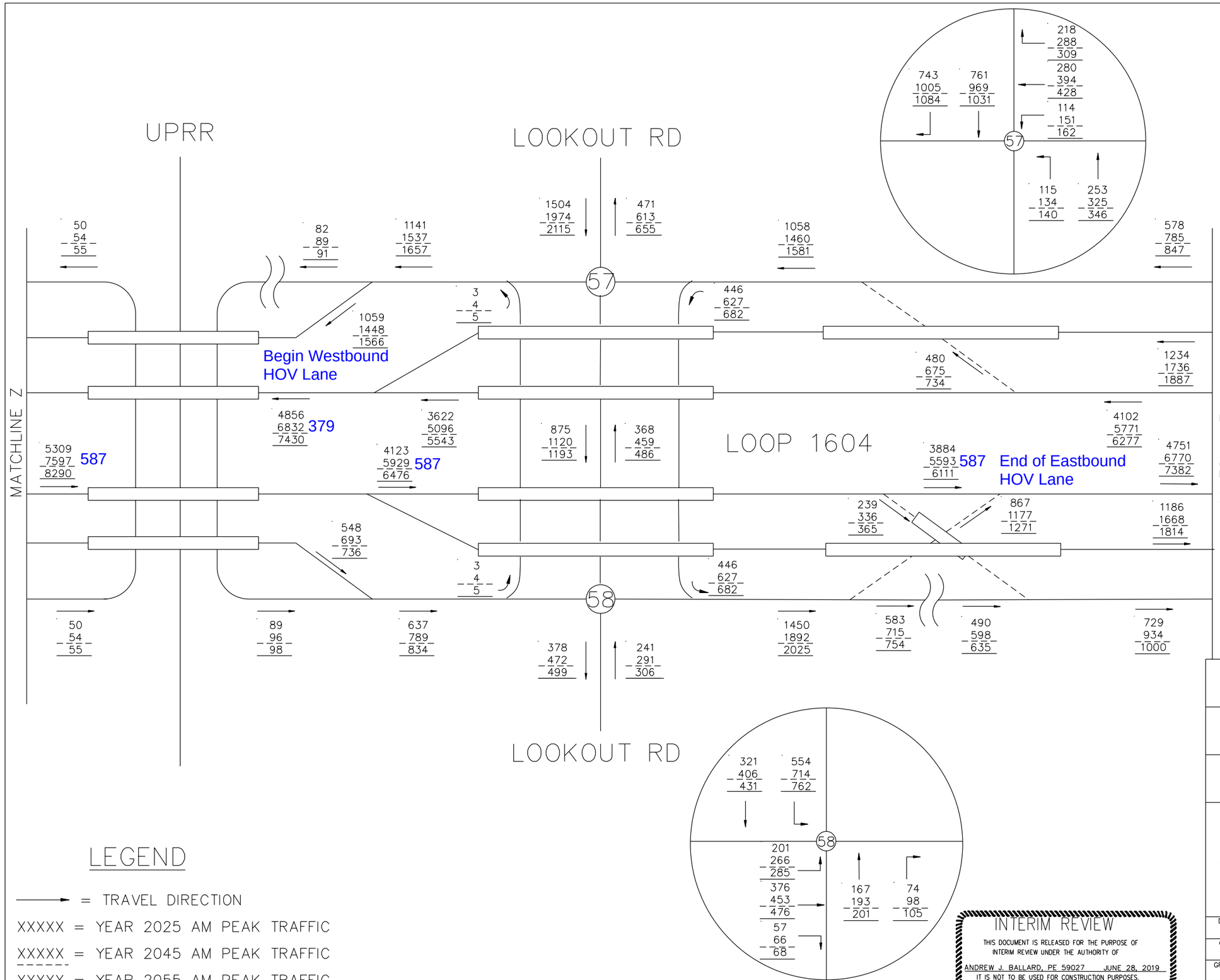

LEGEND

→ = TRAVEL DIRECTION

XXXXX = YEAR 2025 AM PEAK TRAFFIC

XXXXX = YEAR 2045 AM PEAK TRAFFIC

XXXXX = YEAR 2055 AM PEAK TRAFFIC

INTERIM REVIEW

THIS DOCUMENT IS RELEASED FOR THE PURPOSE OF INTERIM REVIEW UNDER THE AUTHORITY OF

ANDREW J. BALLARD, PE 59027 JUNE 28, 2019

IT IS NOT TO BE USED FOR CONSTRUCTION PURPOSES.

© 2018

Texas Department of Transportation

TEDSI INFRASTRUCTURE GROUP
Consulting Engineers
1201 E. Expressway 83
Mission, Texas 78572
(956) 424-7898
TBPE F-1640

JACOBS
JACOBS ENGINEERING GROUP INC. FIRM #2966

LOOP 1604
AM PEAK TRAFFIC PROJECTIONS
BUILD CONDITION

SHEET 27 OF 34

DESIGN CK	FED.RD. DIV.NO.			HIGHWAY NO.
CHECK PK				LOOP 1604
	STATE	DISTRICT	COUNTY	SHEET NO.
GRAPHICS CC	TX	SAN ANTONIO	BEXAR	27
CHECK PK	CONTROL	SECTION	JOB	
	2452	01	068	

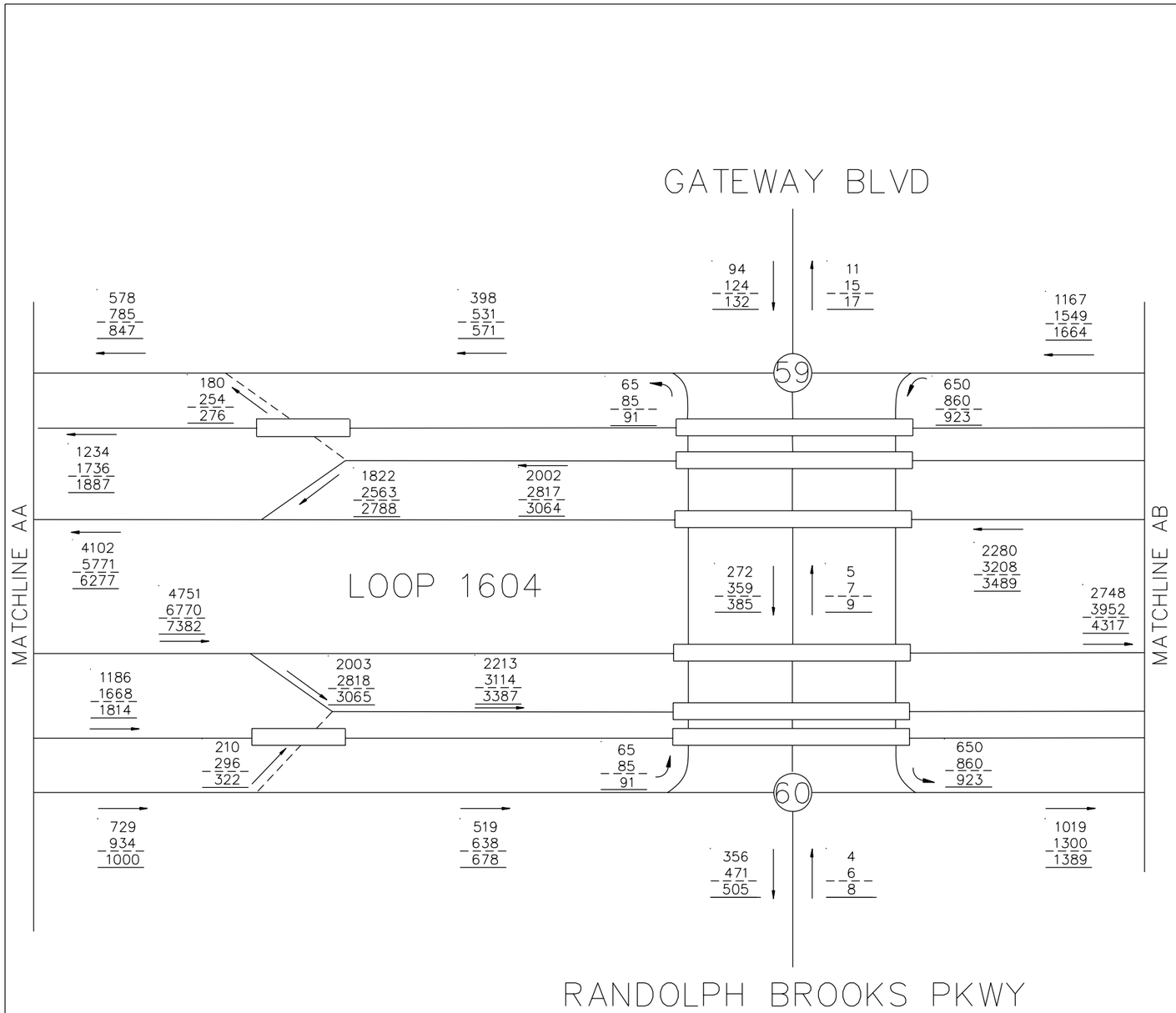

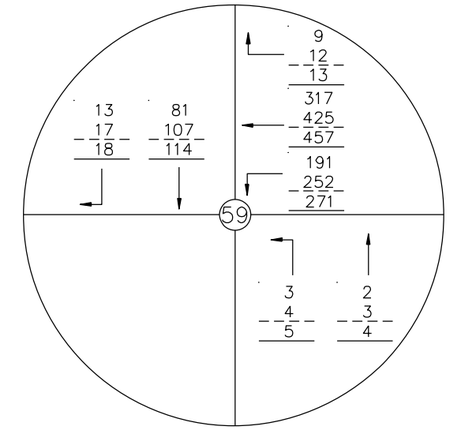

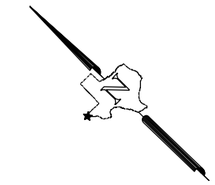

N.T.S.

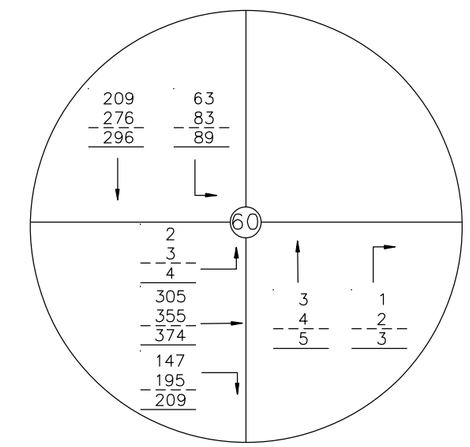

LEGEND

→ = TRAVEL DIRECTION

XXXXX = YEAR 2025 AM PEAK TRAFFIC

XXXXX = YEAR 2045 AM PEAK TRAFFIC

XXXXX = YEAR 2055 AM PEAK TRAFFIC

INTERIM REVIEW

THIS DOCUMENT IS RELEASED FOR THE PURPOSE OF INTERIM REVIEW UNDER THE AUTHORITY OF

ANDREW J. BALLARD, PE 59027 JUNE 28, 2019

IT IS NOT TO BE USED FOR CONSTRUCTION PURPOSES.

© 2018

Texas Department of Transportation

TEDSI INFRASTRUCTURE GROUP
Consulting Engineers
1201 E. Expressway 83
Mission, Texas 78572
(956) 424-7898
TBPE F-1640

JACOBS
JACOBS ENGINEERING GROUP INC. FIRM #2966

LOOP 1604
AM PEAK TRAFFIC PROJECTIONS
BUILD CONDITION

SHEET 28 OF 34

DESIGN CK	FED.RD. DIV.NO.			HIGHWAY NO.
				LOOP 1604
CHECK PK	STATE	DISTRICT	COUNTY	SHEET NO.
GRAPHICS CC	TX	SAN ANTONIO	BEXAR	28
	CONTROL	SECTION	JOB	
CHECK PK	2452	01	068	

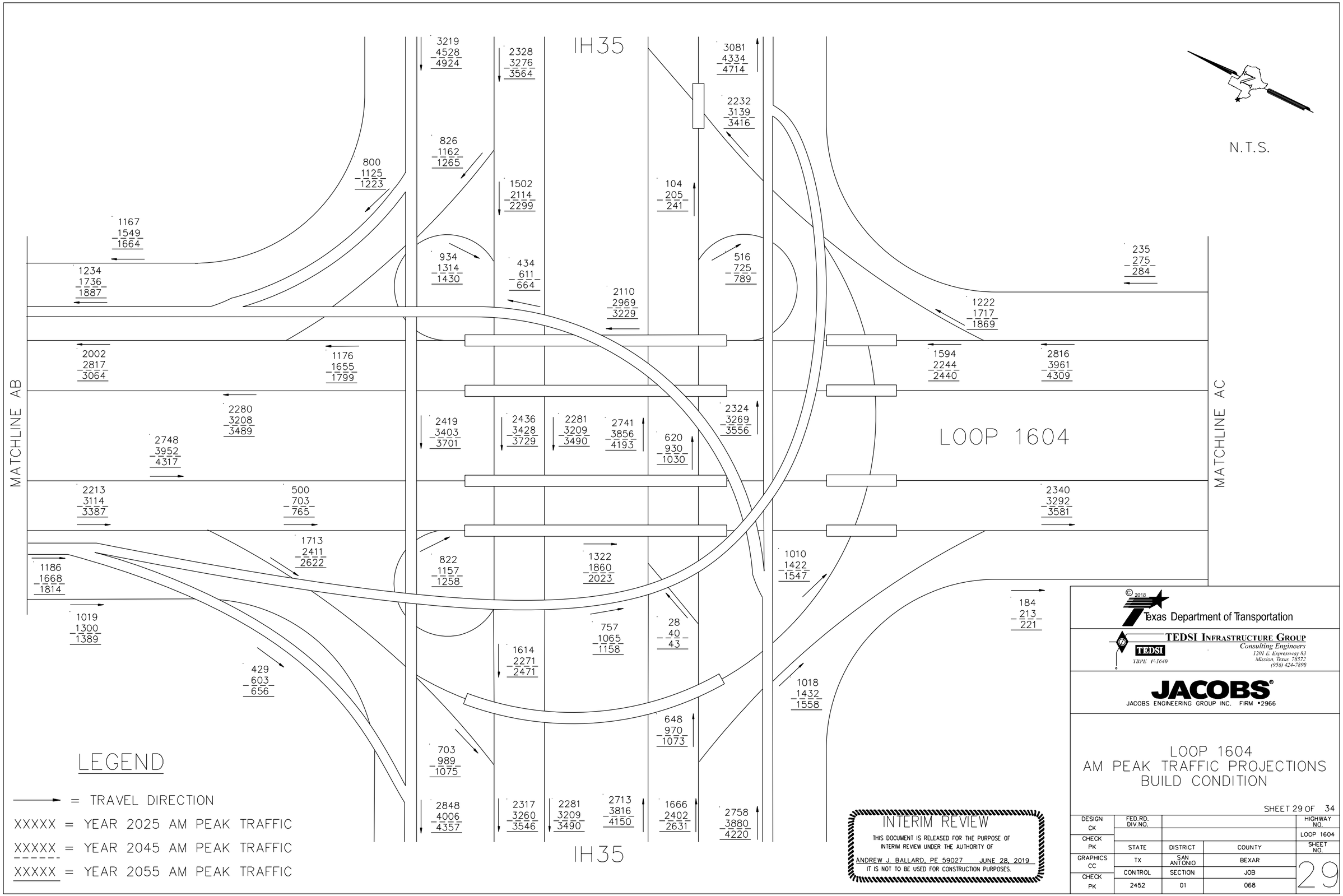
IH35
N.T.S.
LOOP 1604
MATCHLINE AB
MATCHLINE AC
3219 4528 4924
2328 3276 3564
3081 4334 4714
2232 3139 3416
826 1162 1265
800 1125 1223
1502 2114 2299
104 205 241
1167 1549 1664
1234 1736 1887
934 1314 1430
434 611 664
516 725 789
235 275 284
2110 2969 3229
1222 1717 1869
2002 2817 3064
1176 1655 1799
1594 2244 2440
2816 3961 4309
2280 3208 3489
2748 3952 4317
2419 3403 3701
2436 3428 3729
2281 3209 3490
2741 3856 4193
620 930 1030
2324 3269 3556
2213 3114 3387
500 703 765
2340 3292 3581
1713 2411 2622
1186 1668 1814
822 1157 1258
1322 1860 2023
1010 1422 1547
1019 1300 1389
757 1065 1158
28 40 43
184 213 221
1614 2271 2471
429 603 656
1018 1432 1558
648 970 1073
703 989 1075
2848 4006 4357
2317 3260 3546
2281 3209 3490
2713 3816 4150
1666 2402 2631
2758 3880 4220
IH35
LEGEND
= TRAVEL DIRECTION
XXXXX = YEAR 2025 AM PEAK TRAFFIC
XXXXX = YEAR 2045 AM PEAK TRAFFIC
XXXXX = YEAR 2055 AM PEAK TRAFFIC
INTERIM REVIEW
THIS DOCUMENT IS RELEASED FOR THE PURPOSE OF INTERIM REVIEW UNDER THE AUTHORITY OF
ANDREW J. BALLARD, PE 59027 JUNE 28, 2019
IT IS NOT TO BE USED FOR CONSTRUCTION PURPOSES.
© 2018
Texas Department of Transportation
TEDSI INFRASTRUCTURE GROUP
Consulting Engineers
1201 E. Expressway 83
Mission, Texas 78572
(956) 424-7898
TBPE F-1640
JACOBS
JACOBS ENGINEERING GROUP INC. FIRM #2966
LOOP 1604
AM PEAK TRAFFIC PROJECTIONS
BUILD CONDITION
SHEET 29 OF 34
DESIGN CK
CHECK PK
GRAPHICS CC
CHECK PK
FED.RD. DIV.NO.
STATE
DISTRICT
COUNTY
HIGHWAY NO.
LOOP 1604
SHEET NO.
TX
SAN ANTONIO
BEXAR
CONTROL
SECTION
JOB
2452
01
068
29

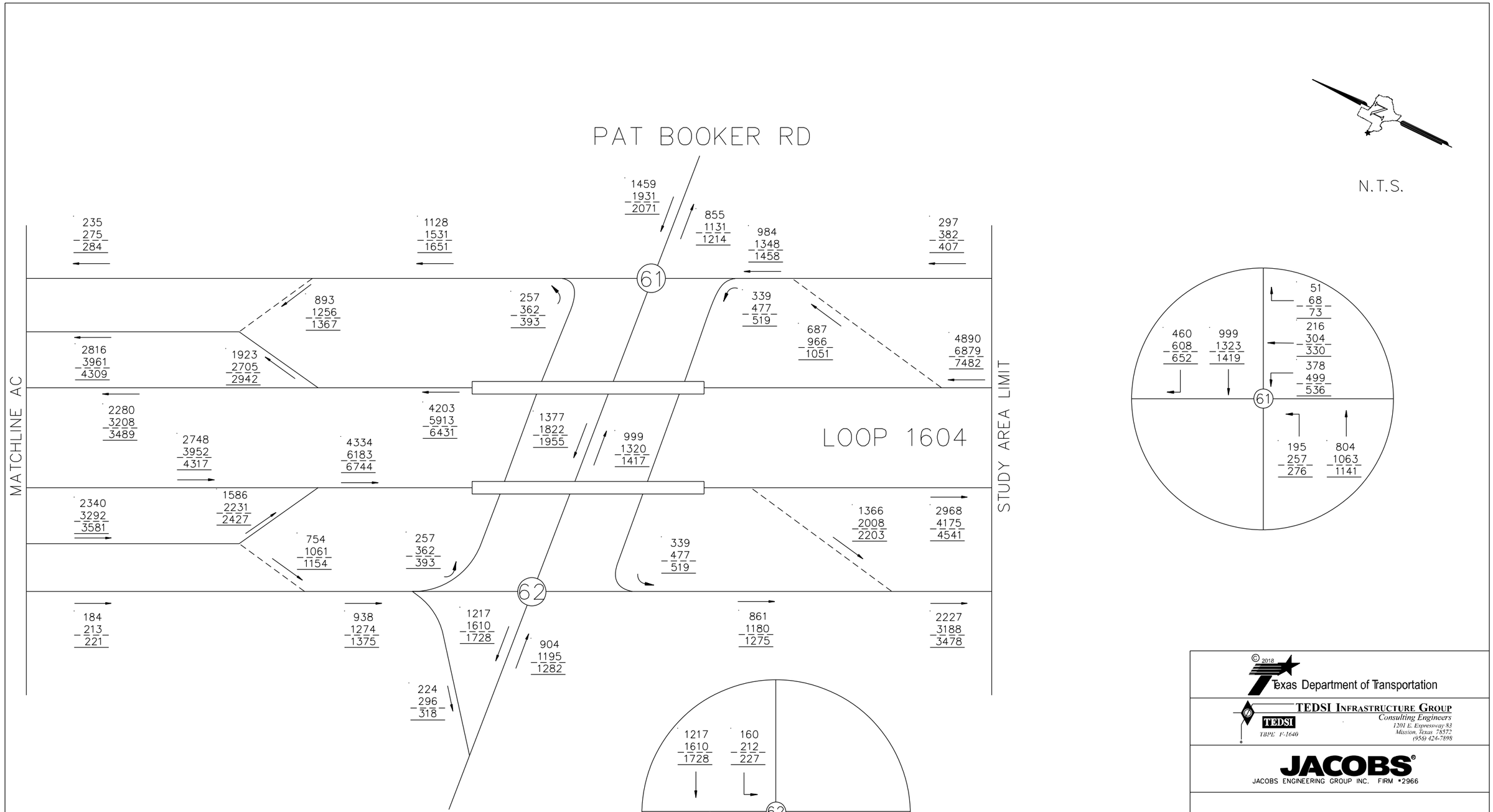

INTERIM REVIEW

THIS DOCUMENT IS RELEASED FOR THE PURPOSE OF INTERIM REVIEW UNDER THE AUTHORITY OF

ANDREW J. BALLARD, PE 59027 JUNE 28, 2019

IT IS NOT TO BE USED FOR CONSTRUCTION PURPOSES.

© 2018 Texas Department of Transportation

TEDSI INFRASTRUCTURE GROUP
Consulting Engineers
1201 E. Expressway 83
Mission, Texas 78572
(956) 424-7898
TBPE F-1640

JACOBS
JACOBS ENGINEERING GROUP INC. FIRM #2966

LOOP 1604
AM PEAK TRAFFIC PROJECTIONS
BUILD CONDITION

SHEET 30 OF 34

DESIGN CK	FED.RD. DIV.NO.			HIGHWAY NO.
				LOOP 1604
CHECK PK	STATE	DISTRICT	COUNTY	SHEET NO.
GRAPHICS CC	TX	SAN ANTONIO	BEXAR	30
CHECK PK	CONTROL	SECTION	JOB	
	2452	01	068	

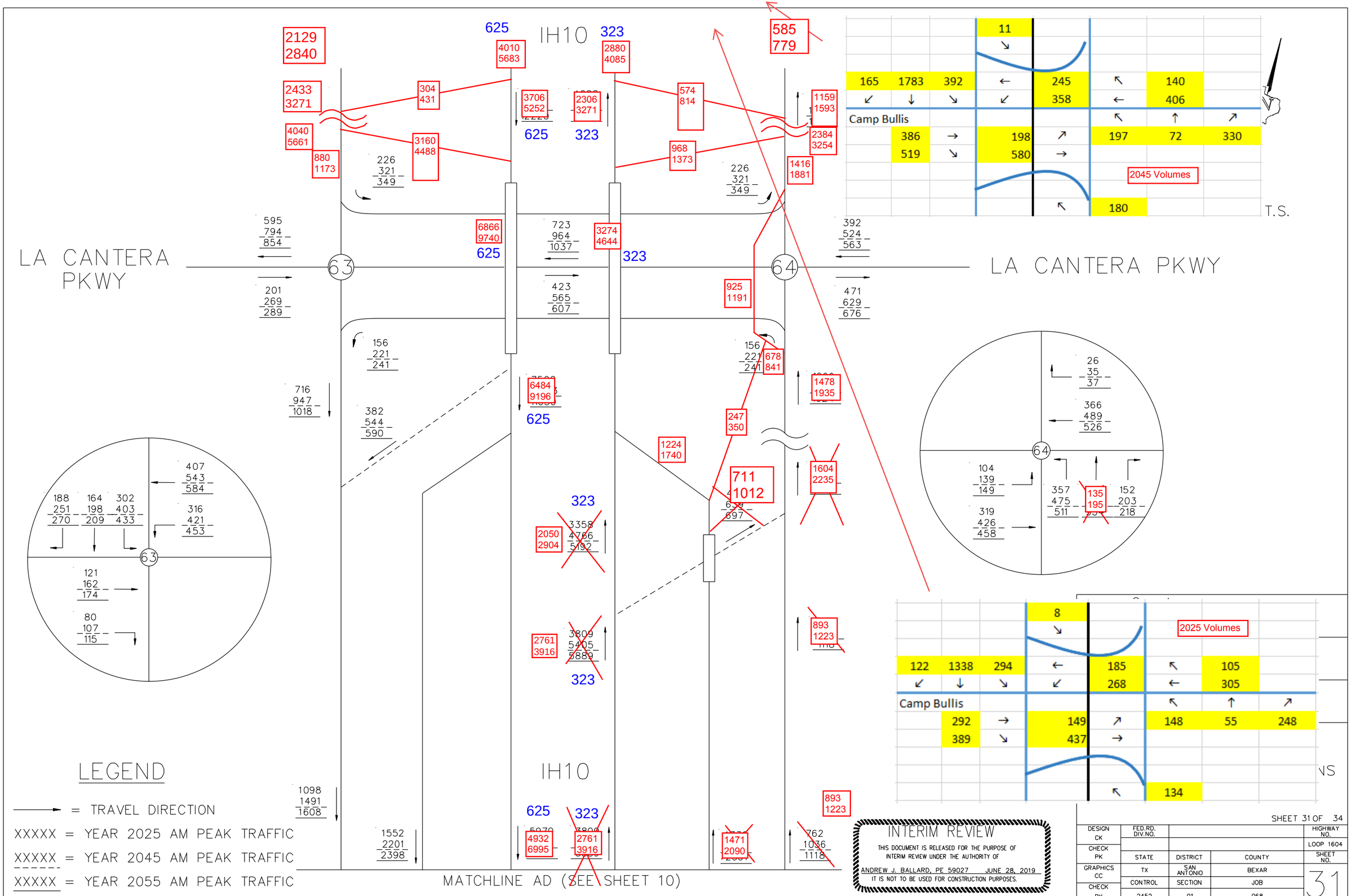
IH10
LA CANTERA PKWY
LA CANTERA PKWY
63
64
2129
2840
2433
3271
4040
5661
880
1173
304
431
3160
4488
625
4010
5683
3706
5252
625
323
2880
4085
2306
3271
323
574
814
968
1373
585
779
1159
1593
2384
3254
1416
1881
6866
9740
625
3274
4644
323
925
1191
678
841
1478
1935
6484
9196
625
247
350
711
1012
1224
1740
1604
2235
2050
2904
323
3358
4766
5192
2761
3916
323
3809
5405
5889
893
1223
893
1223
625
323
4932
6995
2761
3916
1471
2090
762
1036
1118
226
321
349
595
794
854
201
269
289
723
964
1037
423
565
607
392
524
563
471
629
676
156
221
241
716
947
1018
382
544
590
1098
1491
1608
1552
2201
2398
26
35
37
366
489
526
104
139
149
319
426
458
357
475
511
135
195
152
203
218
407
543
584
316
421
453
188
251
270
164
198
302
403
433
121
162
174
80
107
115
11
165
1783
392
245
140
358
406
Camp Bullis
386
198
197
72
330
519
580
2045 Volumes
180
T.S.
8
2025 Volumes
122
1338
294
185
105
268
305
Camp Bullis
292
149
148
55
248
389
437
134
LEGEND
= TRAVEL DIRECTION
XXXXX = YEAR 2025 AM PEAK TRAFFIC
XXXXX = YEAR 2045 AM PEAK TRAFFIC
XXXXX = YEAR 2055 AM PEAK TRAFFIC
MATCHLINE AD (SEE SHEET 10)
INTERIM REVIEW
THIS DOCUMENT IS RELEASED FOR THE PURPOSE OF INTERIM REVIEW UNDER THE AUTHORITY OF
ANDREW J. BALLARD, PE 59027 JUNE 28, 2019
IT IS NOT TO BE USED FOR CONSTRUCTION PURPOSES.
SHEET 31 OF 34
DESIGN CK
FED.RD. DIV.NO.
HIGHWAY NO.
LOOP 1604
CHECK PK
STATE
DISTRICT
COUNTY
SHEET NO.
GRAPHICS CC
TX
SAN ANTONIO
BEXAR
31
CONTROL
SECTION
JOB
CHECK PK
2452
01
068

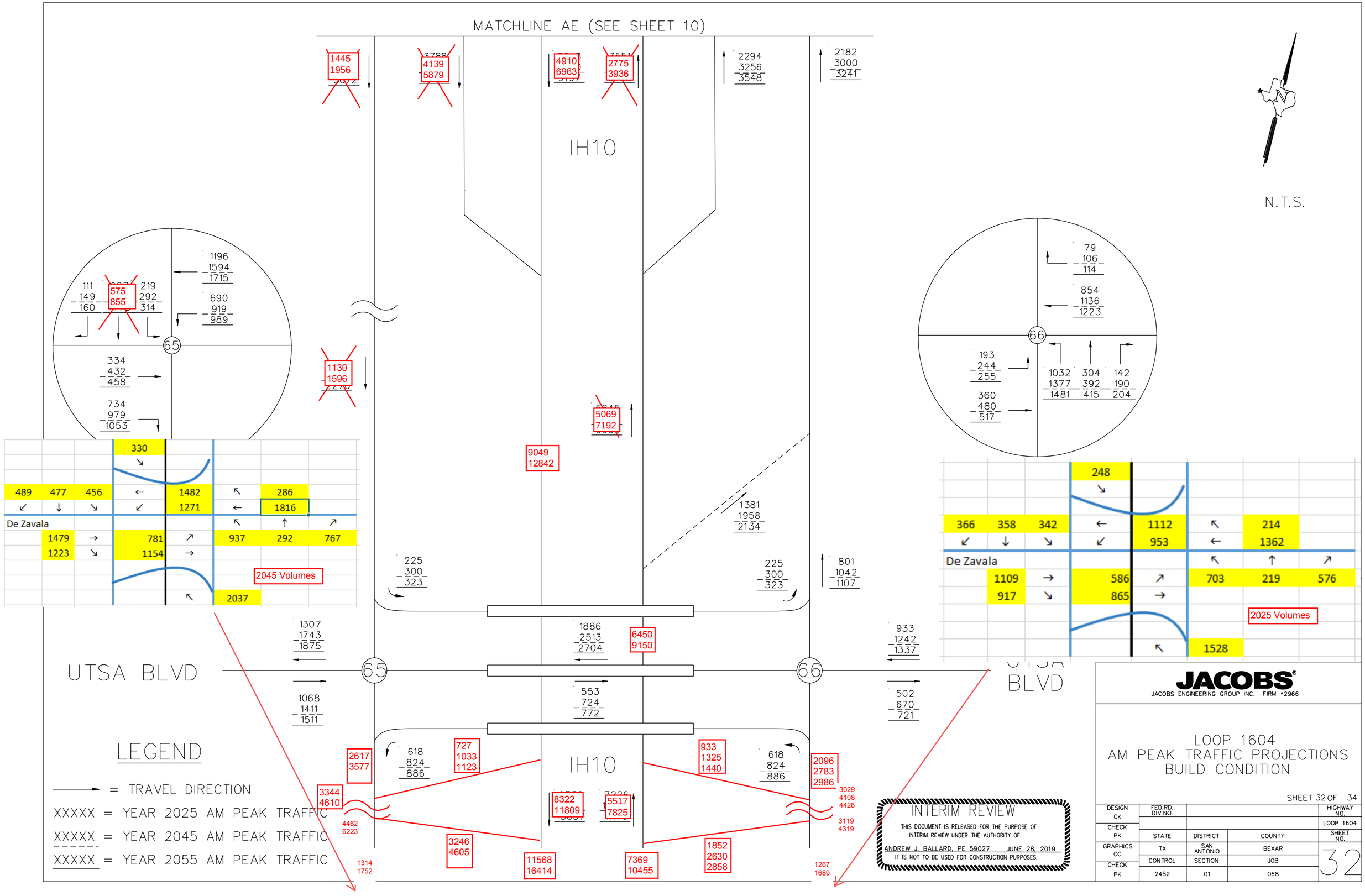
MATCHLINE AE (SEE SHEET 10)
IH10
N.T.S.
1445
1956
4139
5879
4910
6963
2775
3936
2294
3256
3548
2182
3000
3241
1196
1594
1715
111
149
160
575
855
219
292
314
690
919
989
65
334
432
458
734
979
1053
1130
1596
5069
7192
9049
12842
1381
1958
2134
79
106
114
854
1136
1223
66
193
244
255
360
480
517
1032
1377
1481
304
392
415
142
190
204
330
489
477
456
1482
1271
286
1816
De Zavala
1479
1223
781
1154
937
292
767
2045 Volumes
2037
248
366
358
342
1112
953
214
1362
1109
917
586
865
703
219
576
2025 Volumes
1528
225
300
323
801
1042
1107
1307
1743
1875
1886
2513
2704
6450
9150
933
1242
1337
UTSA BLVD
1068
1411
1511
553
724
772
502
670
721
618
824
886
2617
3577
727
1033
1123
933
1325
1440
2096
2783
2986
3344
4610
4462
6223
IH10
8322
11809
5517
7825
3029
4108
4426
3119
4319
3246
4605
11568
16414
7369
10455
1852
2630
2858
1314
1752
1267
1689
LEGEND
= TRAVEL DIRECTION
XXXXX = YEAR 2025 AM PEAK TRAFFIC
XXXXX = YEAR 2045 AM PEAK TRAFFIC
XXXXX = YEAR 2055 AM PEAK TRAFFIC
INTERIM REVIEW
THIS DOCUMENT IS RELEASED FOR THE PURPOSE OF INTERIM REVIEW UNDER THE AUTHORITY OF
ANDREW J. BALLARD, PE 59027 JUNE 28, 2019
IT IS NOT TO BE USED FOR CONSTRUCTION PURPOSES.
JACOBS
JACOBS ENGINEERING GROUP INC. FIRM #2966
LOOP 1604
AM PEAK TRAFFIC PROJECTIONS
BUILD CONDITION
SHEET 32 OF 34
DESIGN CK
CHECK PK
GRAPHICS CC
CHECK PK
FED.RD. DIV.NO.
STATE
TX
CONTROL
2452
DISTRICT
01
COUNTY
SAN ANTONIO
SECTION
JOB
068
BEXAR
HIGHWAY NO.
LOOP 1604
SHEET NO.
32

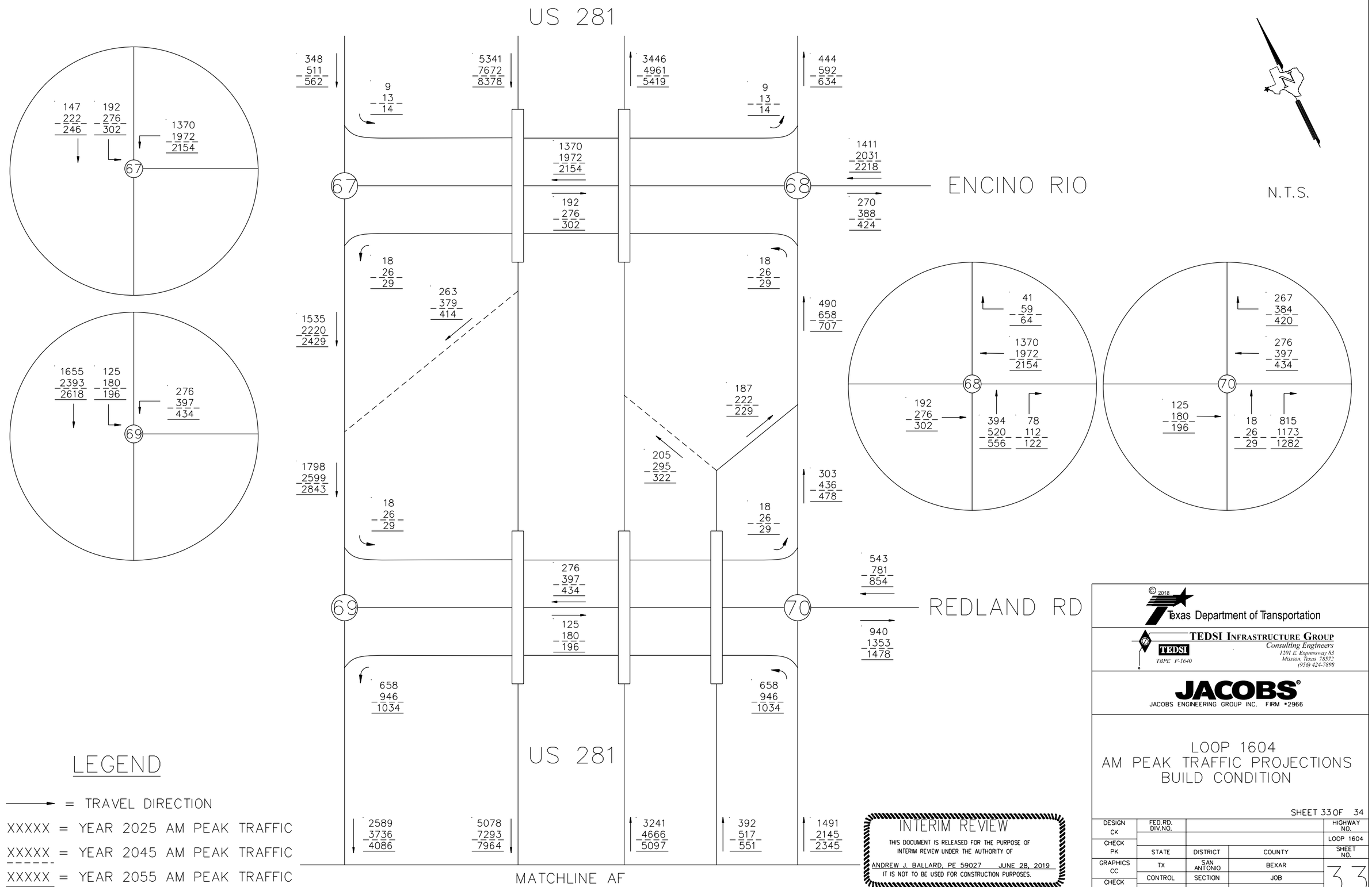

LEGEND

→ = TRAVEL DIRECTION

XXXXX = YEAR 2025 AM PEAK TRAFFIC

XXXXX = YEAR 2045 AM PEAK TRAFFIC

XXXXX = YEAR 2055 AM PEAK TRAFFIC

INTERIM REVIEW

THIS DOCUMENT IS RELEASED FOR THE PURPOSE OF INTERIM REVIEW UNDER THE AUTHORITY OF

ANDREW J. BALLARD, PE 59027 JUNE 28, 2019

IT IS NOT TO BE USED FOR CONSTRUCTION PURPOSES.

© 2018

Texas Department of Transportation

TEDSI INFRASTRUCTURE GROUP
Consulting Engineers
1201 E. Expressway 83
Mission, Texas 78572
(956) 424-7898
TBPE F-1640

JACOBS
JACOBS ENGINEERING GROUP INC. FIRM #2966

LOOP 1604
AM PEAK TRAFFIC PROJECTIONS
BUILD CONDITION

SHEET 33 OF 34

DESIGN CK	FED.RD. DIV.NO.			HIGHWAY NO.
				LOOP 1604
CHECK PK	STATE	DISTRICT	COUNTY	SHEET NO.
GRAPHICS CC	TX	SAN ANTONIO	BEXAR	33
	CONTROL	SECTION	JOB	
CHECK PK	2452	01	068	

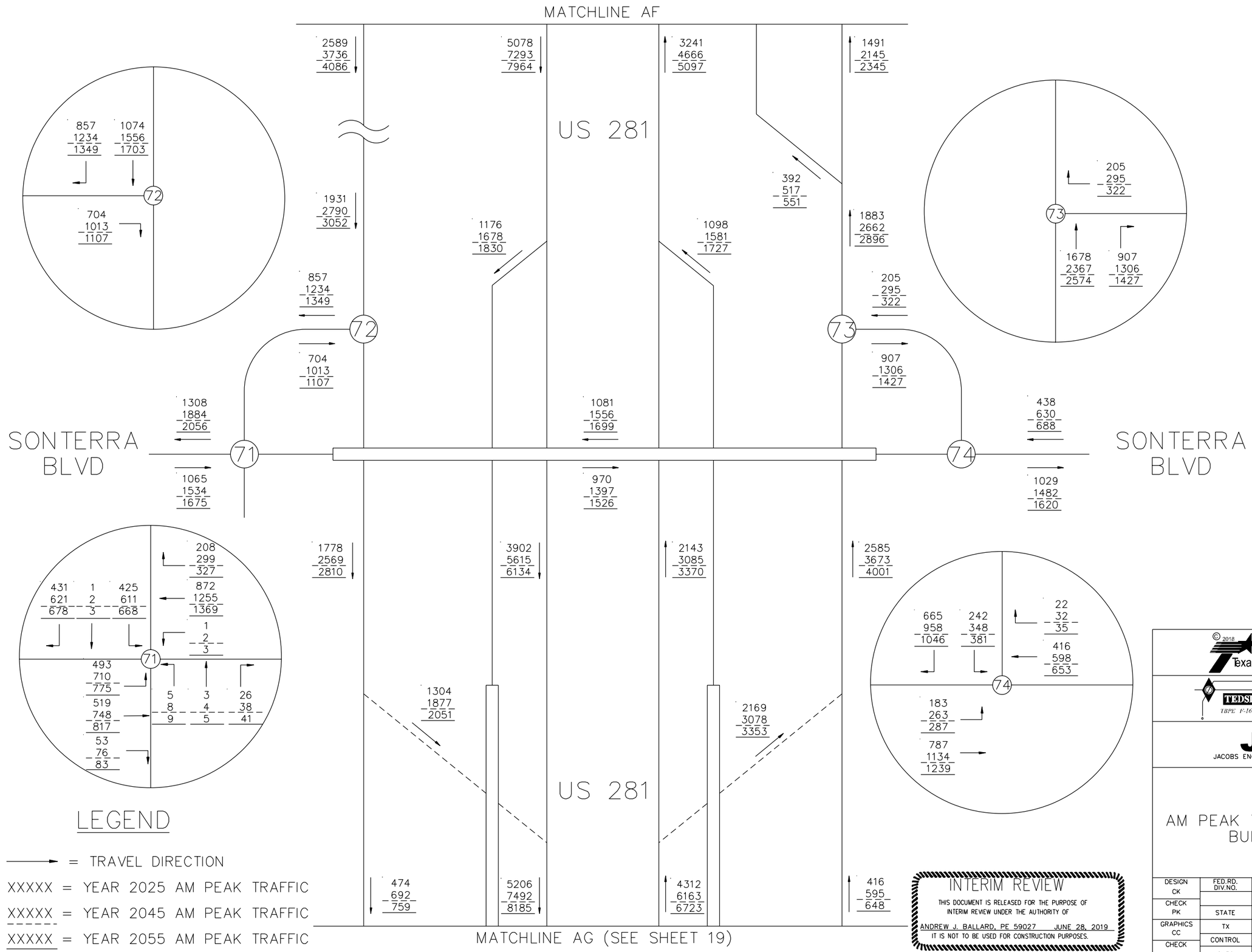

INTERIM REVIEW

THIS DOCUMENT IS RELEASED FOR THE PURPOSE OF INTERIM REVIEW UNDER THE AUTHORITY OF

ANDREW J. BALLARD, PE 59027 JUNE 28, 2019

IT IS NOT TO BE USED FOR CONSTRUCTION PURPOSES.

© 2018

Texas Department of Transportation

TEDSI INFRASTRUCTURE GROUP
Consulting Engineers
1201 E. Expressway 83
Mission, Texas 78572
(956) 424-7898
TBPE F-1640

JACOBS
JACOBS ENGINEERING GROUP INC. FIRM #2966

LOOP 1604
AM PEAK TRAFFIC PROJECTIONS
BUILD CONDITION

SHEET 34 OF 34

DESIGN CK	FED.RD. DIV.NO.			HIGHWAY NO.
CHECK PK				LOOP 1604
	STATE	DISTRICT	COUNTY	SHEET NO.
GRAPHICS CC	TX	SAN ANTONIO	BEXAR	34
	CONTROL	SECTION	JOB	
CHECK PK	2452	01	068	

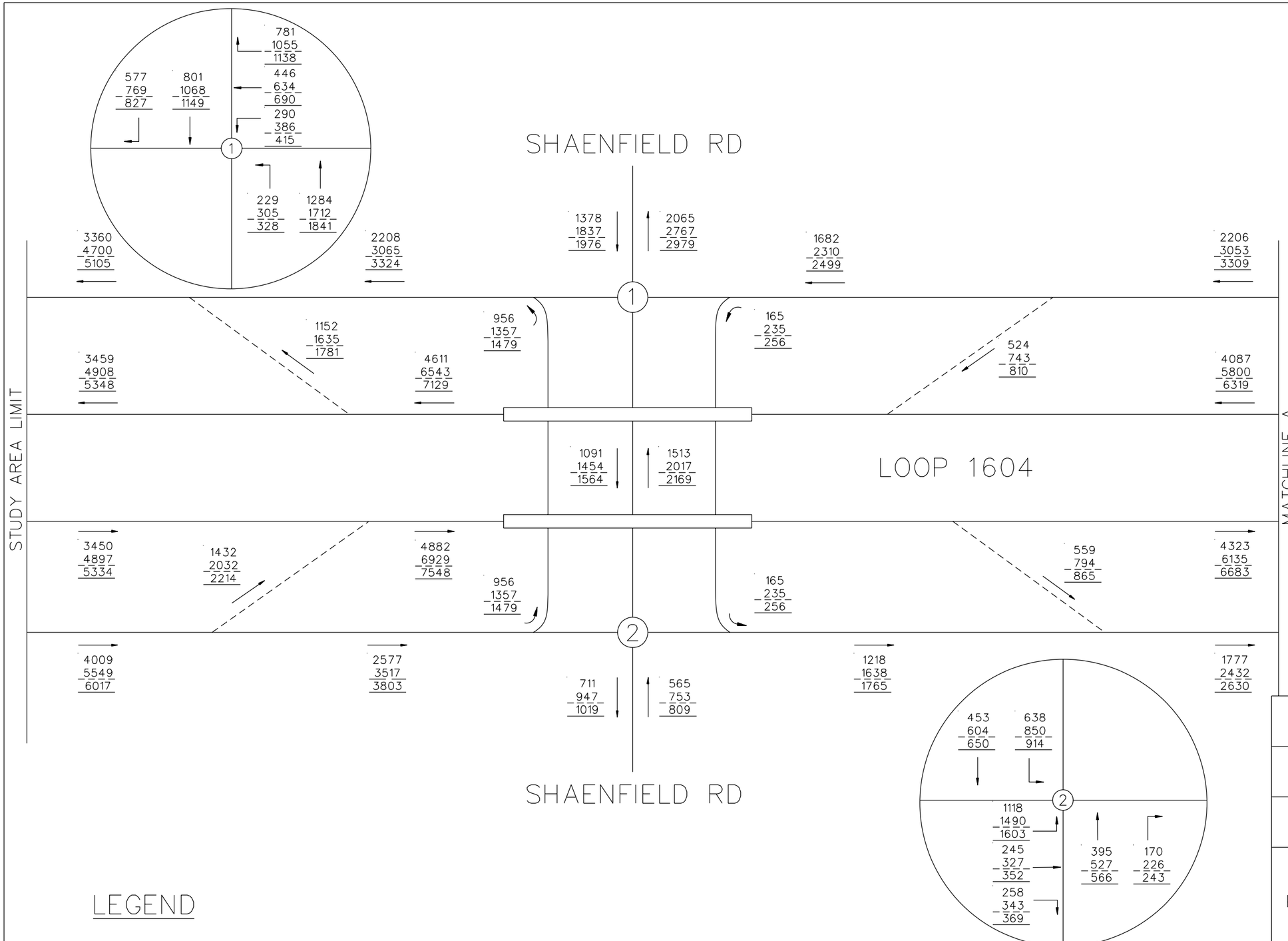

N.T.S.

LEGEND

→ = TRAVEL DIRECTION

XXXXX = YEAR 2025 PM PEAK TRAFFIC

XXXXX = YEAR 2045 PM PEAK TRAFFIC

XXXXX = YEAR 2055 PM PEAK TRAFFIC

INTERIM REVIEW

THIS DOCUMENT IS RELEASED FOR THE PURPOSE OF INTERIM REVIEW UNDER THE AUTHORITY OF

ANDREW J. BALLARD, PE 59027 JUNE 28, 2019

IT IS NOT TO BE USED FOR CONSTRUCTION PURPOSES.

© 2018

Texas Department of Transportation

TEDSI INFRASTRUCTURE GROUP
Consulting Engineers
1201 E. Expressway 83
Mission, Texas 78572
(956) 424-7898
TBPE F-1640

JACOBS
JACOBS ENGINEERING GROUP INC. FIRM #2966

LOOP 1604
PM PEAK TRAFFIC PROJECTIONS
BUILD CONDITION

SHEET 1 OF 34

DESIGN	FED.RD. DIV.NO.			HIGHWAY NO.
CK				LOOP 1604
CHECK	STATE	DISTRICT	COUNTY	SHEET NO.
PK	TX	SAN ANTONIO	BEXAR	
GRAPHICS CC	CONTROL	SECTION	JOB	1
CHECK PK	2452	01	068	

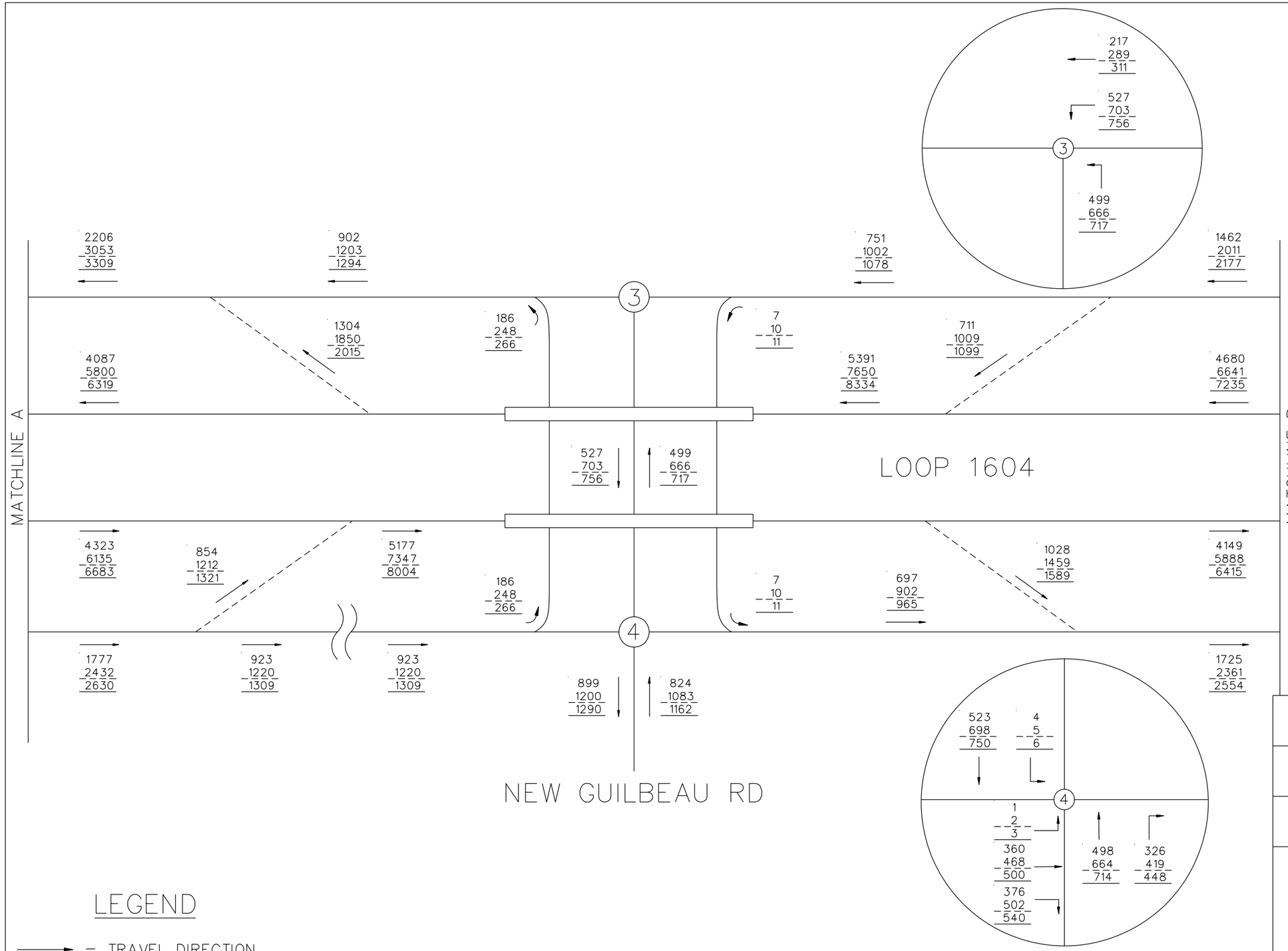

N.T.S.

LEGEND

→ = TRAVEL DIRECTION

XXXXX = YEAR 2025 PM PEAK TRAFFIC

XXXXX = YEAR 2045 PM PEAK TRAFFIC

XXXXX = YEAR 2055 PM PEAK TRAFFIC

INTERIM REVIEW

THIS DOCUMENT IS RELEASED FOR THE PURPOSE OF INTERIM REVIEW UNDER THE AUTHORITY OF

ANDREW J. BALLARD, PE 59027 JUNE 28, 2019

IT IS NOT TO BE USED FOR CONSTRUCTION PURPOSES.

© 2018

Texas Department of Transportation

TEDSI INFRASTRUCTURE GROUP
Consulting Engineers
1201 E. Expressway 83
Mission, Texas 78572
(956) 424-7898
TBPE F-1640

JACOBS®
JACOBS ENGINEERING GROUP INC. FIRM #2966

LOOP 1604
PM PEAK TRAFFIC PROJECTIONS
BUILD CONDITION

SHEET 2 OF 34

DESIGN	FED.RD. DIV.NO.			HIGHWAY NO.
CK				LOOP 1604
CHECK	STATE	DISTRICT	COUNTY	SHEET NO.
PK	TX	SAN ANTONIO	BEXAR	2
GRAPHICS	CONTROL	SECTION	JOB	
CC	2452	01	068	
CHECK				
PK				

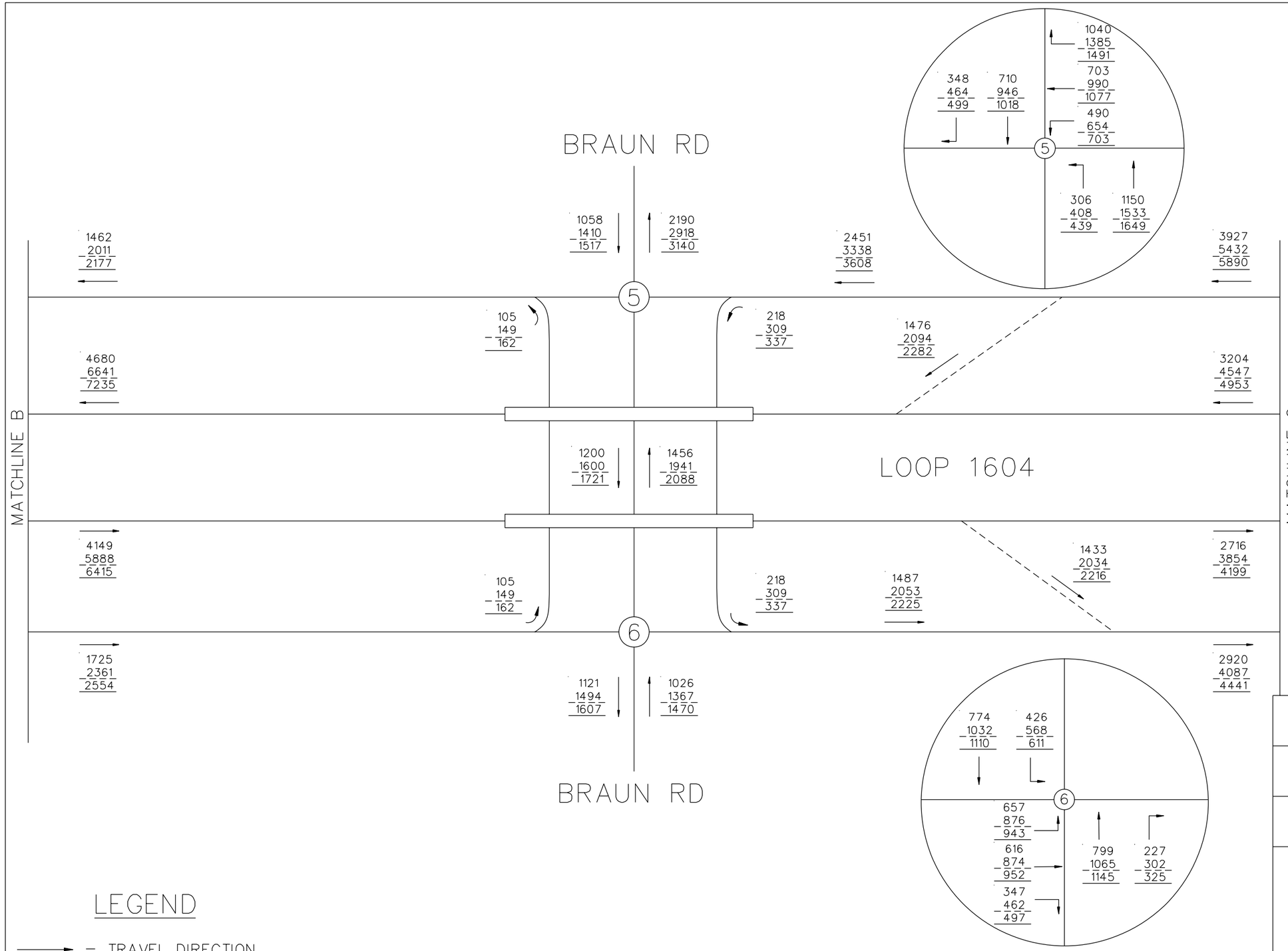

N.T.S.

LEGEND

→ = TRAVEL DIRECTION

XXXXX = YEAR 2025 PM PEAK TRAFFIC

XXXXX = YEAR 2045 PM PEAK TRAFFIC

XXXXX = YEAR 2055 PM PEAK TRAFFIC

INTERIM REVIEW

THIS DOCUMENT IS RELEASED FOR THE PURPOSE OF INTERIM REVIEW UNDER THE AUTHORITY OF

ANDREW J. BALLARD, PE 59027 JUNE 28, 2019

IT IS NOT TO BE USED FOR CONSTRUCTION PURPOSES.

© 2018

Texas Department of Transportation

TEDSI INFRASTRUCTURE GROUP
Consulting Engineers
1201 E. Expressway 83
Mission, Texas 78572
(956) 424-7898
TBPE F-1640

JACOBS
JACOBS ENGINEERING GROUP INC. FIRM #2966

LOOP 1604
PM PEAK TRAFFIC PROJECTIONS
BUILD CONDITION

SHEET 3 OF 34

DESIGN	FED.RD. DIV.NO.			HIGHWAY NO.
CK				LOOP 1604
CHECK	STATE	DISTRICT	COUNTY	SHEET NO.
PK	TX	SAN ANTONIO	BEXAR	3
GRAPHICS	CONTROL	SECTION	JOB	
CC	2452	01	068	
CHECK				
PK				

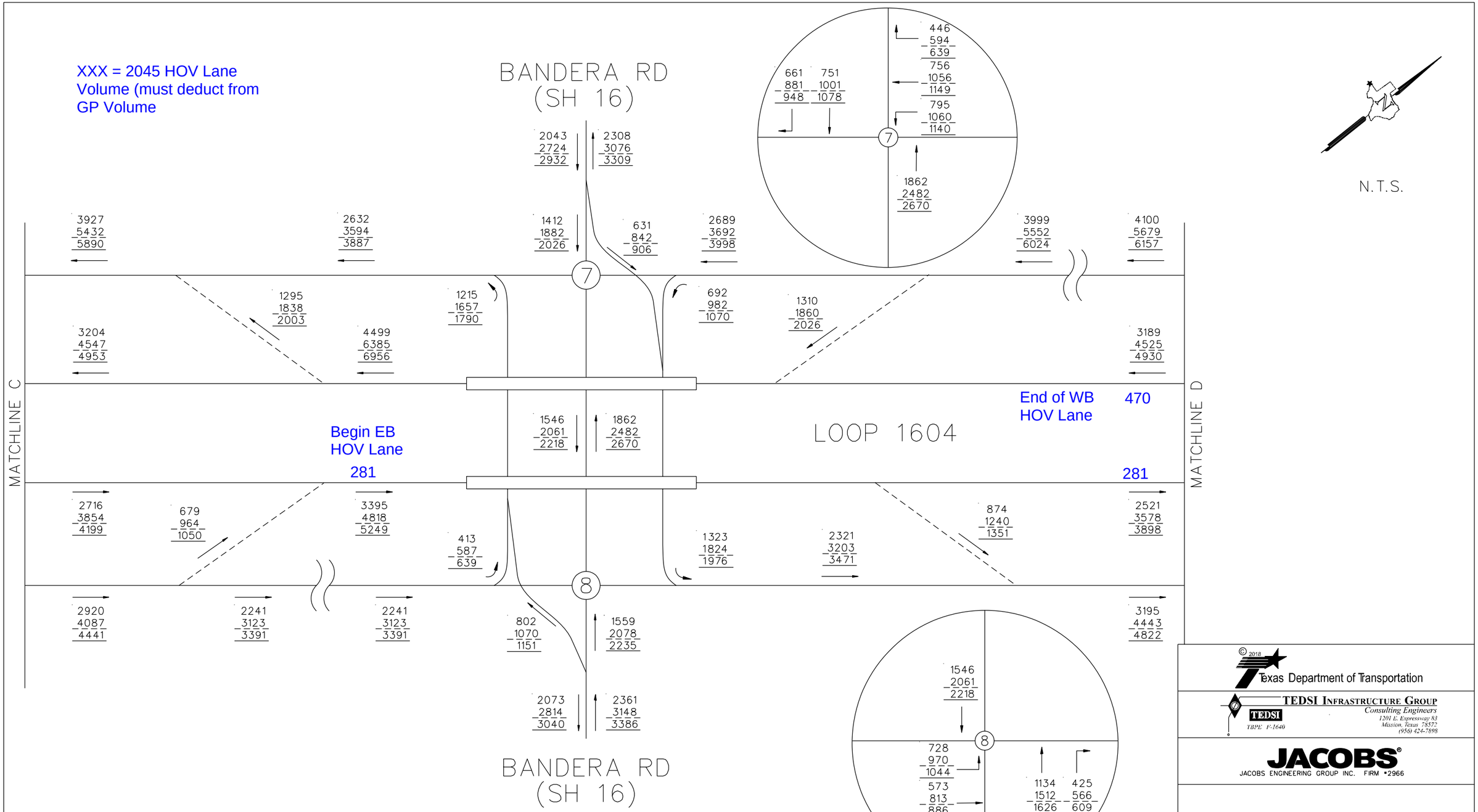

LEGEND

→ = TRAVEL DIRECTION

XXXXX = YEAR 2025 PM PEAK TRAFFIC

XXXXX = YEAR 2045 PM PEAK TRAFFIC

XXXXX = YEAR 2055 PM PEAK TRAFFIC

INTERIM REVIEW

THIS DOCUMENT IS RELEASED FOR THE PURPOSE OF INTERIM REVIEW UNDER THE AUTHORITY OF

ANDREW J. BALLARD, PE 59027 JUNE 28, 2019

IT IS NOT TO BE USED FOR CONSTRUCTION PURPOSES.

© 2018

Texas Department of Transportation

TEDSI INFRASTRUCTURE GROUP
Consulting Engineers
1201 E. Expressway 83
Mission, Texas 78572
(956) 424-7898
TBPE F-1640

JACOBS®
JACOBS ENGINEERING GROUP INC. FIRM #2966

LOOP 1604
PM PEAK TRAFFIC PROJECTIONS
BUILD CONDITION

SHEET 4 OF 34

DESIGN CK	FED.RD. DIV.NO.			HIGHWAY NO.
CHECK PK				LOOP 1604
	STATE	DISTRICT	COUNTY	SHEET NO.
GRAPHICS CC	TX	SAN ANTONIO	BEXAR	4
CHECK PK	CONTROL	SECTION	JOB	
	2452	01	068	

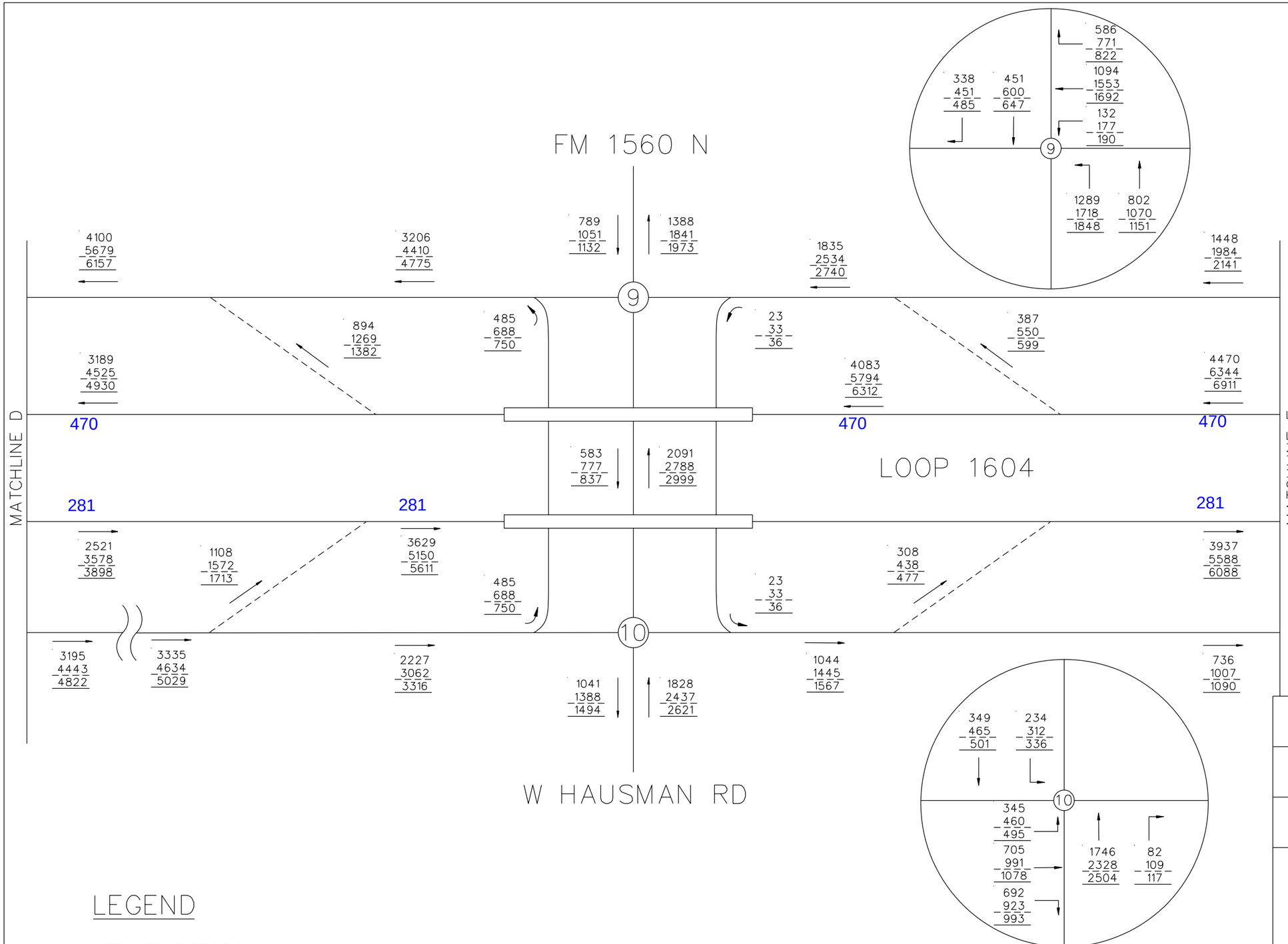

N.T.S.

LEGEND

→ = TRAVEL DIRECTION

XXXXX = YEAR 2025 PM PEAK TRAFFIC

XXXXX = YEAR 2045 PM PEAK TRAFFIC

XXXXX = YEAR 2055 PM PEAK TRAFFIC

INTERIM REVIEW

THIS DOCUMENT IS RELEASED FOR THE PURPOSE OF INTERIM REVIEW UNDER THE AUTHORITY OF

ANDREW J. BALLARD, PE 59027 JUNE 28, 2019

IT IS NOT TO BE USED FOR CONSTRUCTION PURPOSES.

© 2018

Texas Department of Transportation

TEDSI INFRASTRUCTURE GROUP
Consulting Engineers
1201 E. Expressway 83
Mission, Texas 78572
(956) 424-7898
TBPE F-1640

JACOBS
JACOBS ENGINEERING GROUP INC. FIRM #2966

LOOP 1604
PM PEAK TRAFFIC PROJECTIONS
BUILD CONDITION

SHEET 5 OF 34

DESIGN CK	FED.RD. DIV.NO.			HIGHWAY NO.
CHECK PK				LOOP 1604
	STATE	DISTRICT	COUNTY	SHEET NO.
GRAPHICS CC	TX	SAN ANTONIO	BEXAR	5
	CONTROL	SECTION	JOB	
CHECK PK	2452	01	068	

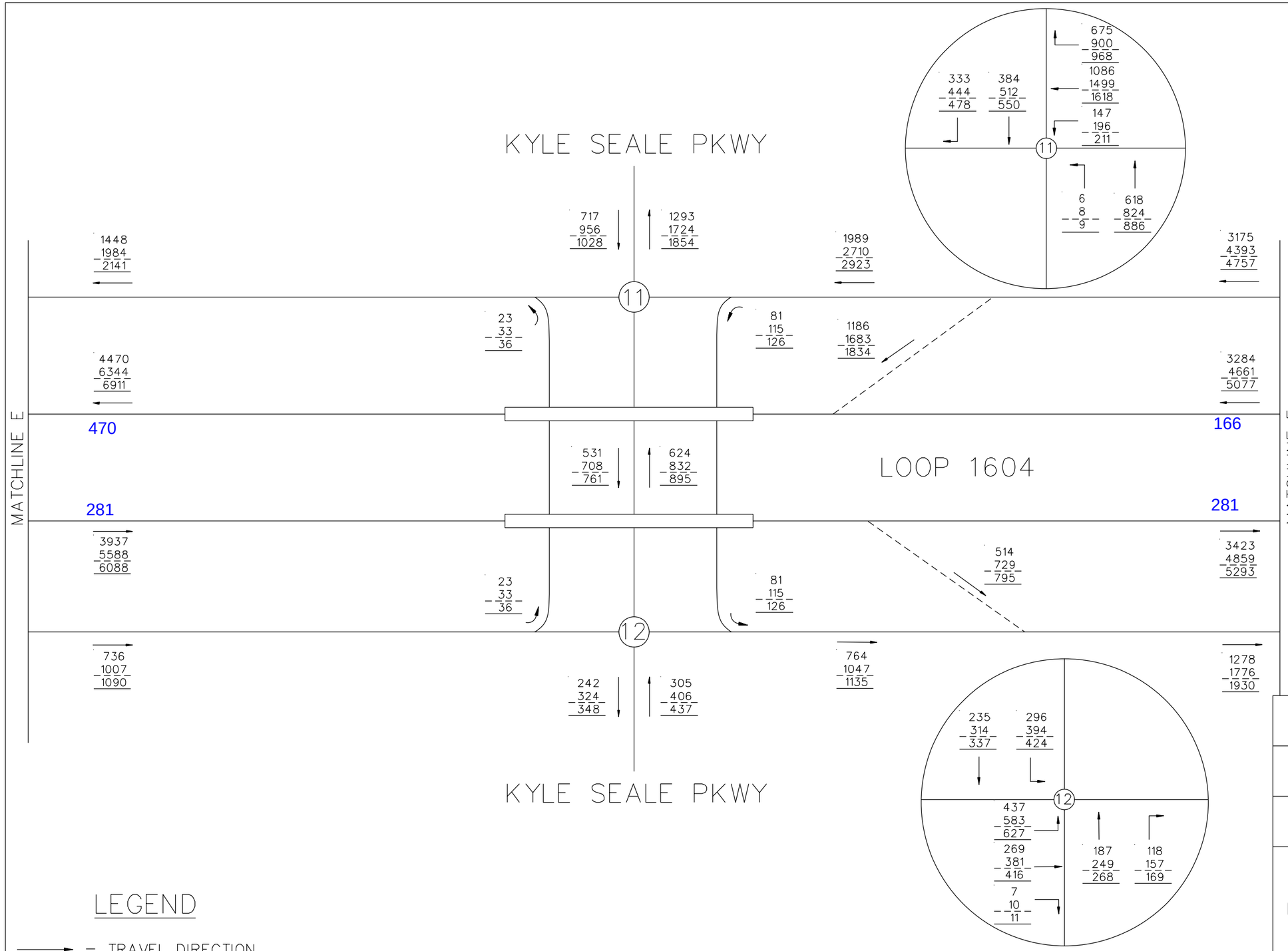

N.T.S.

LEGEND

→ = TRAVEL DIRECTION

XXXXX = YEAR 2025 PM PEAK TRAFFIC

XXXXX = YEAR 2045 PM PEAK TRAFFIC

XXXXX = YEAR 2055 PM PEAK TRAFFIC

INTERIM REVIEW

THIS DOCUMENT IS RELEASED FOR THE PURPOSE OF INTERIM REVIEW UNDER THE AUTHORITY OF

ANDREW J. BALLARD, PE 59027 JUNE 28, 2019

IT IS NOT TO BE USED FOR CONSTRUCTION PURPOSES.

© 2018

Texas Department of Transportation

TEDSI INFRASTRUCTURE GROUP
Consulting Engineers
1201 E. Expressway 83
Mission, Texas 78572
(956) 424-7898
TBPE F-1640

JACOBS
JACOBS ENGINEERING GROUP INC. FIRM #2966

LOOP 1604
PM PEAK TRAFFIC PROJECTIONS
BUILD CONDITION

SHEET 6 OF 34

DESIGN	FED.RD. DIV.NO.			HIGHWAY NO.
CK				LOOP 1604
CHECK	STATE	DISTRICT	COUNTY	SHEET NO.
PK	TX	SAN ANTONIO	BEXAR	6
GRAPHICS	CONTROL	SECTION	JOB	
CC	2452	01	068	
CHECK				
PK				

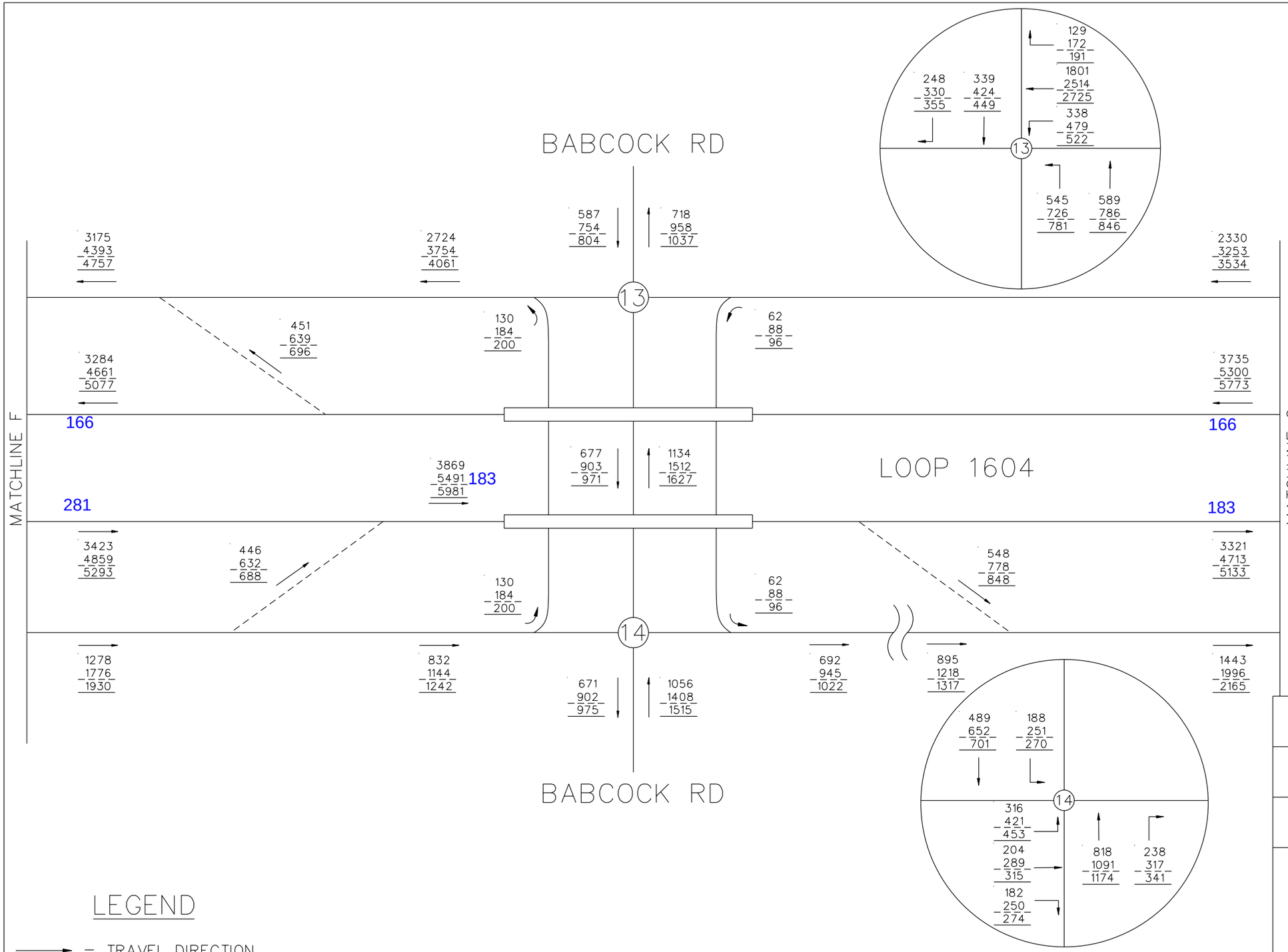

LEGEND

→ = TRAVEL DIRECTION

XXXXX = YEAR 2025 PM PEAK TRAFFIC

XXXXX = YEAR 2045 PM PEAK TRAFFIC

XXXXX = YEAR 2055 PM PEAK TRAFFIC

INTERIM REVIEW

THIS DOCUMENT IS RELEASED FOR THE PURPOSE OF INTERIM REVIEW UNDER THE AUTHORITY OF

ANDREW J. BALLARD, PE 59027 JUNE 28, 2019

IT IS NOT TO BE USED FOR CONSTRUCTION PURPOSES.

© 2018 Texas Department of Transportation

TEDSI INFRASTRUCTURE GROUP
Consulting Engineers
1201 E. Expressway 83
Mission, Texas 78572
(956) 424-7898
TBPE F-1640

JACOBS
JACOBS ENGINEERING GROUP INC. FIRM #2966

LOOP 1604
PM PEAK TRAFFIC PROJECTIONS
BUILD CONDITION

SHEET 7 OF 34

DESIGN CK	FED.RD. DIV.NO.			HIGHWAY NO.
CHECK PK				LOOP 1604
	STATE	DISTRICT	COUNTY	SHEET NO.
GRAPHICS CC	TX	SAN ANTONIO	BEXAR	7
CHECK PK	CONTROL	SECTION	JOB	
	2452	01	068	

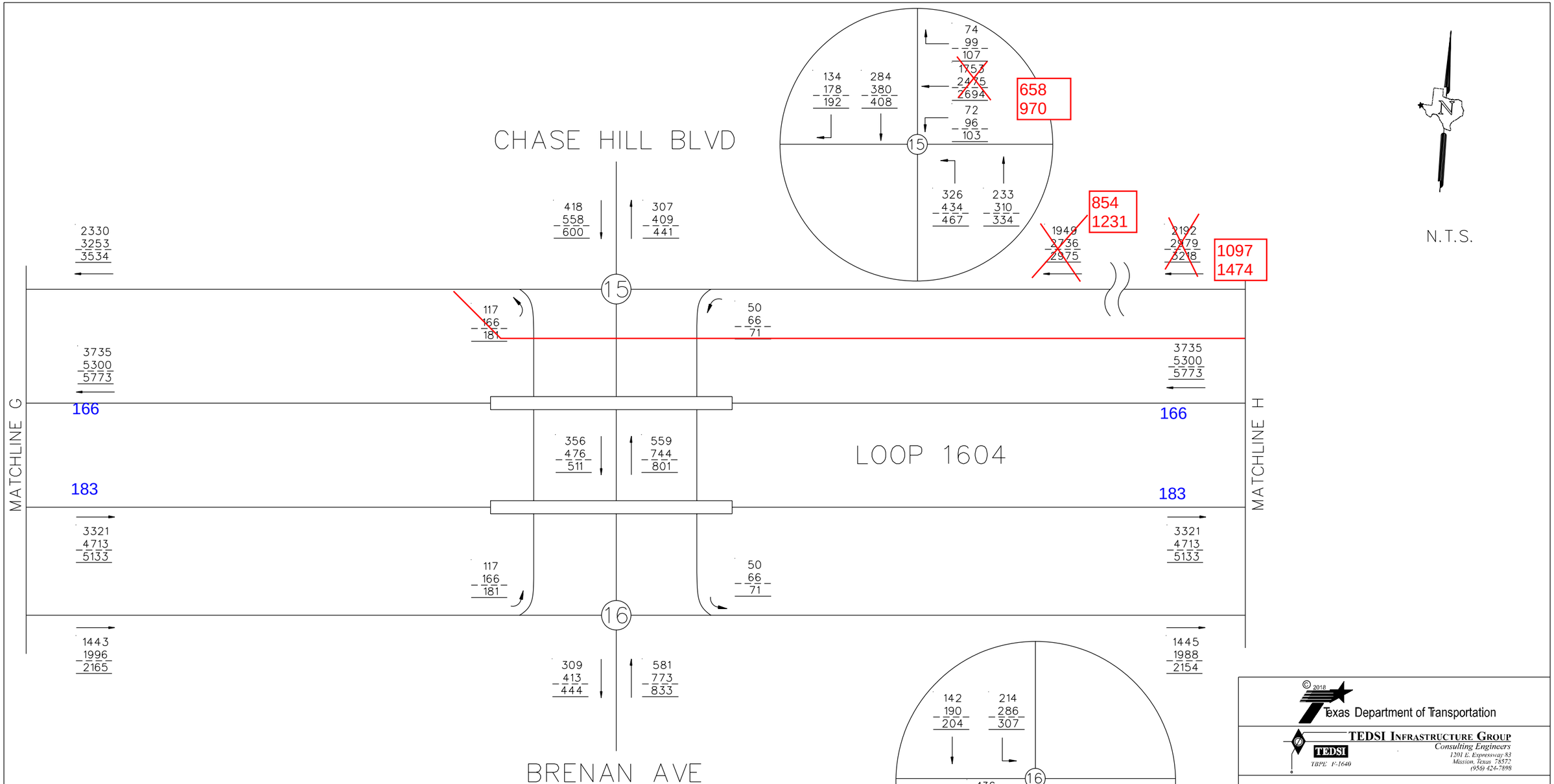

LEGEND

→ = TRAVEL DIRECTION

XXXXX = YEAR 2025 PM PEAK TRAFFIC

XXXXX = YEAR 2045 PM PEAK TRAFFIC

XXXXX = YEAR 2055 PM PEAK TRAFFIC

INTERIM REVIEW

THIS DOCUMENT IS RELEASED FOR THE PURPOSE OF INTERIM REVIEW UNDER THE AUTHORITY OF

ANDREW J. BALLARD, PE 59027 JUNE 28, 2019

IT IS NOT TO BE USED FOR CONSTRUCTION PURPOSES.

© 2018 Texas Department of Transportation

TEDSI INFRASTRUCTURE GROUP
Consulting Engineers
1201 E. Expressway 83
Mission, Texas 78572
(956) 424-7898
TBPE F-1640

JACOBS®
JACOBS ENGINEERING GROUP INC. FIRM #2966

LOOP 1604
PM PEAK TRAFFIC PROJECTIONS
BUILD CONDITION

SHEET 8 OF 34

DESIGN CK	FED.RD. DIV.NO.			HIGHWAY NO.
CHECK PK				LOOP 1604
	STATE	DISTRICT	COUNTY	SHEET NO.
GRAPHICS CC	TX	SAN ANTONIO	BEXAR	8
CHECK PK	CONTROL	SECTION	JOB	
	2452	01	068	

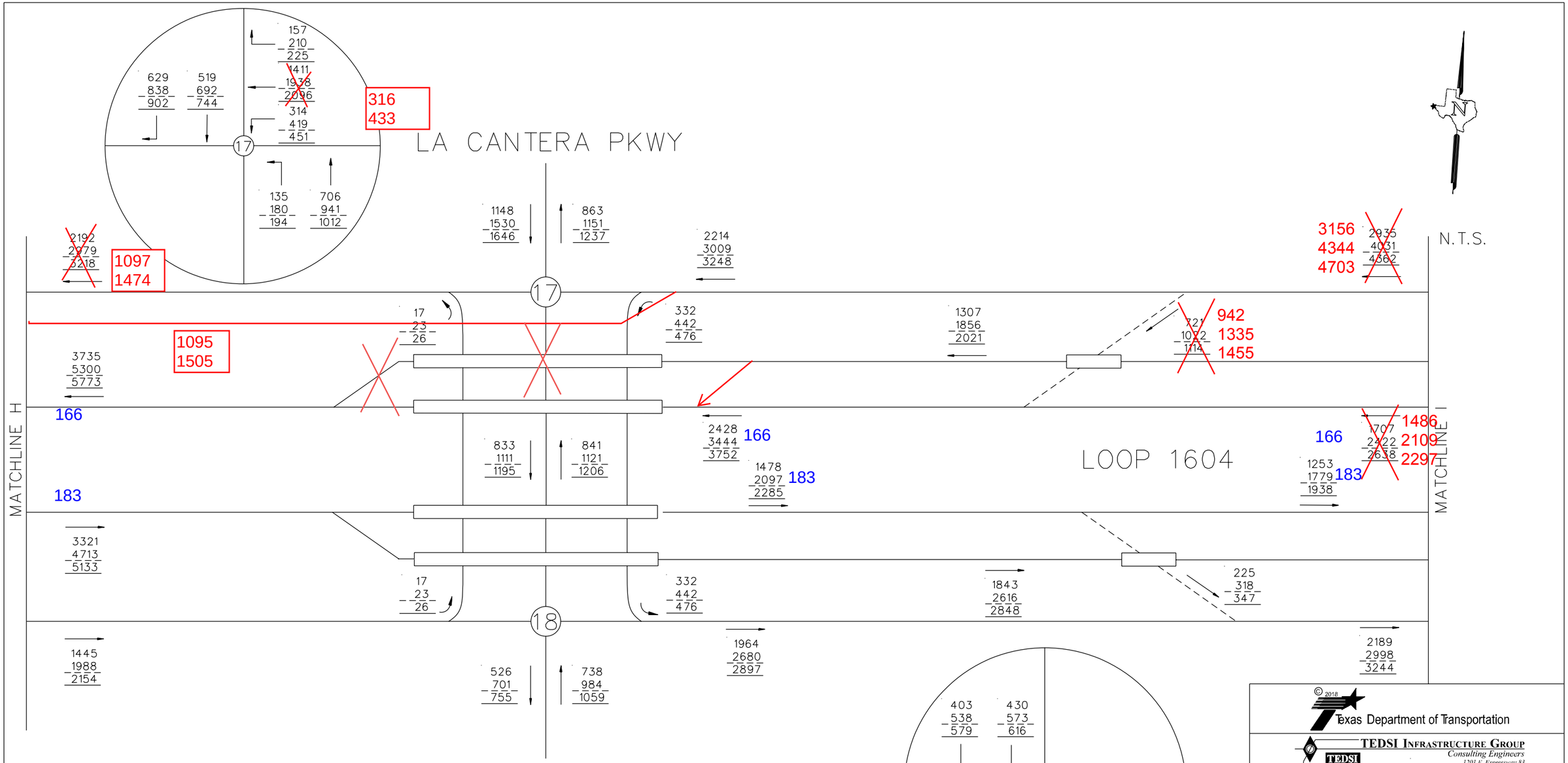

LEGEND

→ = TRAVEL DIRECTION

XXXXX = YEAR 2025 PM PEAK TRAFFIC

XXXXX = YEAR 2045 PM PEAK TRAFFIC

XXXXX = YEAR 2055 PM PEAK TRAFFIC

INTERIM REVIEW

THIS DOCUMENT IS RELEASED FOR THE PURPOSE OF INTERIM REVIEW UNDER THE AUTHORITY OF

ANDREW J. BALLARD, PE 59027 JUNE 28, 2019

IT IS NOT TO BE USED FOR CONSTRUCTION PURPOSES.

© 2018

Texas Department of Transportation

TEDSI INFRASTRUCTURE GROUP
Consulting Engineers
1201 E. Expressway 83
Mission, Texas 78572
(956) 424-7898
TBPE F-1640

JACOBS
JACOBS ENGINEERING GROUP INC. FIRM #2966

LOOP 1604
PM PEAK TRAFFIC PROJECTIONS
BUILD CONDITION

SHEET 9 OF 34

DESIGN CK	FED.RD. DIV.NO.			HIGHWAY NO.
CHECK PK				LOOP 1604
	STATE	DISTRICT	COUNTY	SHEET NO.
GRAPHICS CC	TX	SAN ANTONIO	BEXAR	9
CHECK PK	CONTROL	SECTION	JOB	
	2452	01	068	

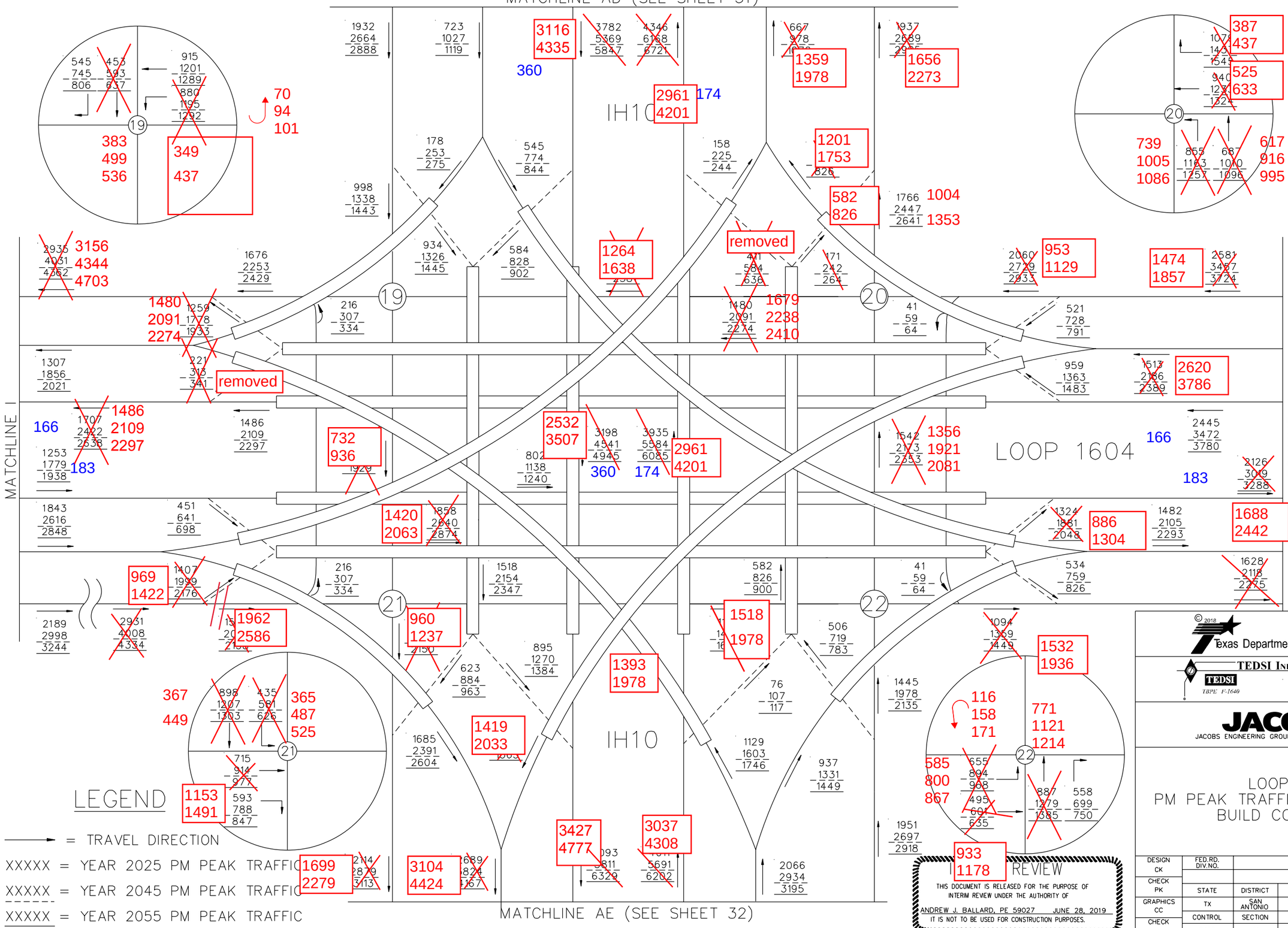

© 2018 Texas Department of Transportation

TEDSI INFRASTRUCTURE GROUP
Consulting Engineers
1201 E. Expressway 83
Mission, Texas 78572
(956) 424-7898
TBPE F-1640

JACOBS®
JACOBS ENGINEERING GROUP INC. FIRM #2966

LOOP 1604
PM PEAK TRAFFIC PROJECTIONS
BUILD CONDITION

SHEET 10 OF 34

INTERIM REVIEW
THIS DOCUMENT IS RELEASED FOR THE PURPOSE OF INTERIM REVIEW UNDER THE AUTHORITY OF ANDREW J. BALLARD, PE 59027 JUNE 28, 2019
IT IS NOT TO BE USED FOR CONSTRUCTION PURPOSES.

DESIGN CK	FED.RD. DIV.NO.			HIGHWAY NO.
CHECK PK				LOOP 1604
	STATE	DISTRICT	COUNTY	SHEET NO.
GRAPHICS CC	TX	SAN ANTONIO	BEXAR	10
CHECK PK	CONTROL	SECTION	JOB	
	2452	01	068	

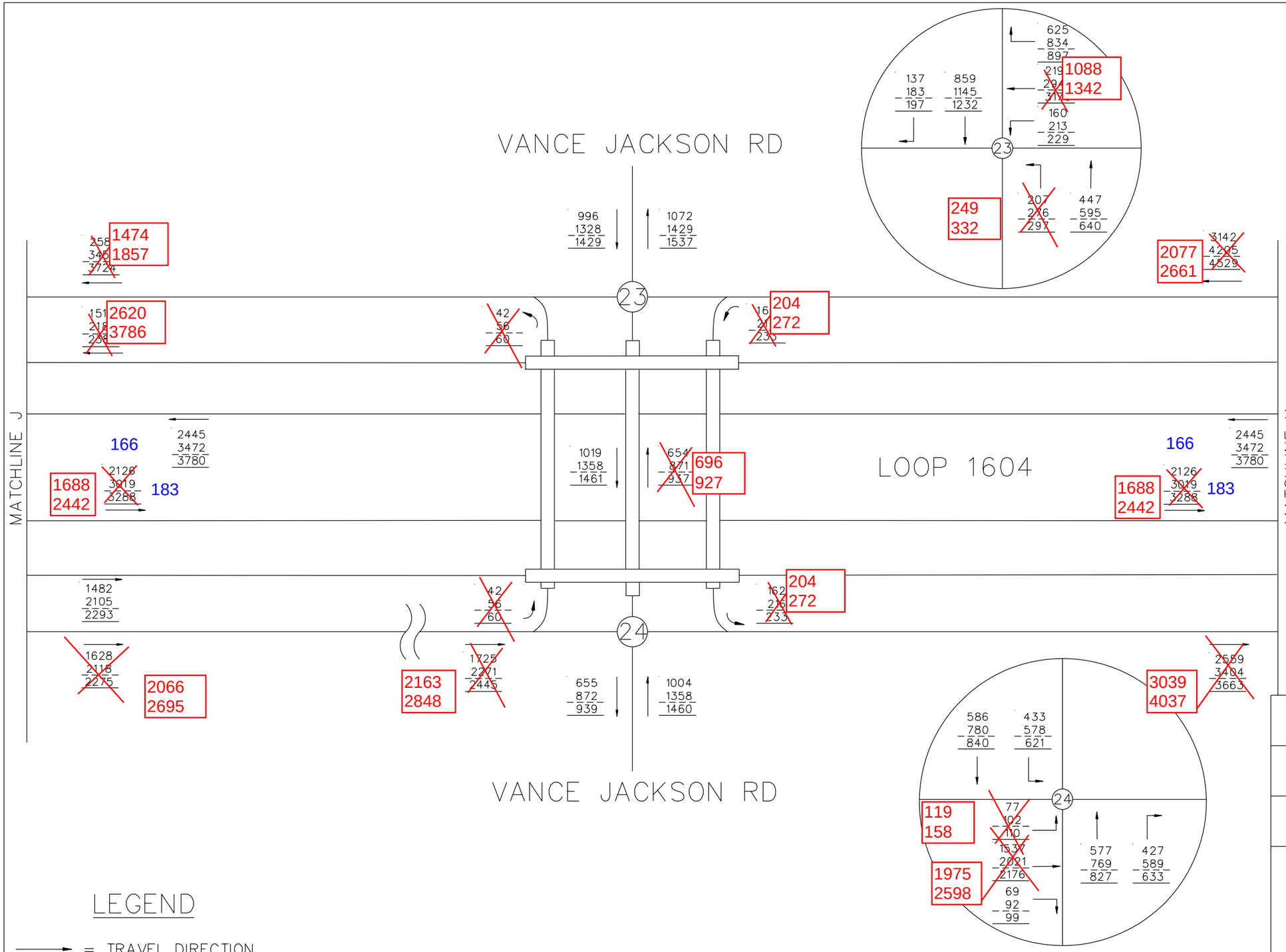

LEGEND

→ = TRAVEL DIRECTION

XXXXX = YEAR 2025 PM PEAK TRAFFIC

XXXXX = YEAR 2045 PM PEAK TRAFFIC

XXXXX = YEAR 2055 PM PEAK TRAFFIC

INTERIM REVIEW

THIS DOCUMENT IS RELEASED FOR THE PURPOSE OF INTERIM REVIEW UNDER THE AUTHORITY OF

ANDREW J. BALLARD, PE 59027 JUNE 28, 2019

IT IS NOT TO BE USED FOR CONSTRUCTION PURPOSES.

© 2018

Texas Department of Transportation

TEDSI INFRASTRUCTURE GROUP
Consulting Engineers
1201 E. Expressway 83
Mission, Texas 78572
(956) 424-7898
TBPE F-1640

JACOBS
JACOBS ENGINEERING GROUP INC. FIRM #2966

LOOP 1604
PM PEAK TRAFFIC PROJECTIONS
BUILD CONDITION

SHEET 11 OF 34

DESIGN CK	FED.RD. DIV.NO.			HIGHWAY NO.
CHECK PK				LOOP 1604
	STATE	DISTRICT	COUNTY	SHEET NO.
GRAPHICS CC	TX	SAN ANTONIO	BEXAR	11
CHECK PK	CONTROL	SECTION	JOB	
	2452	01	068	

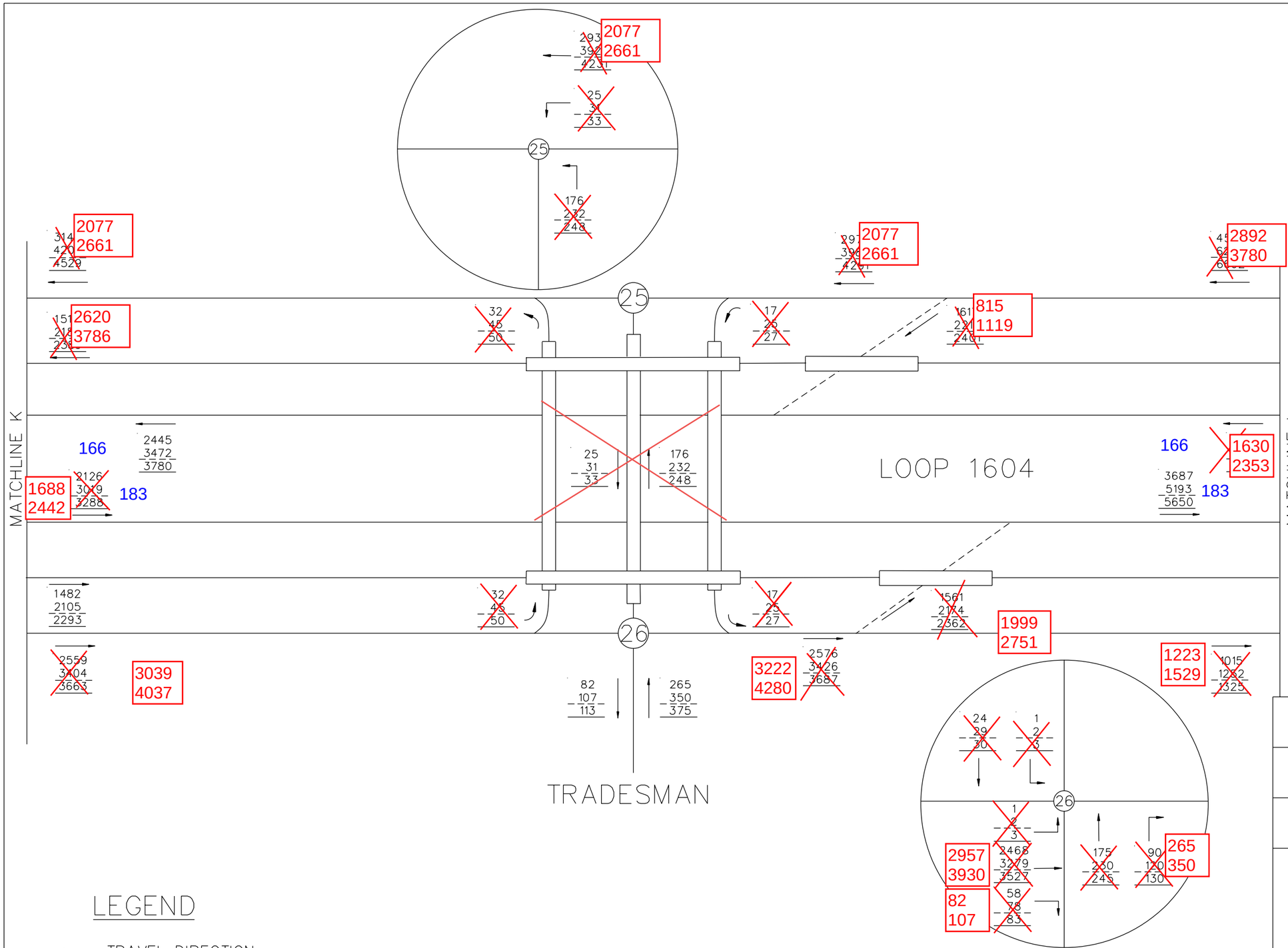

N.T.S.

LEGEND

→ = TRAVEL DIRECTION

XXXXX = YEAR 2025 PM PEAK TRAFFIC

XXXXX = YEAR 2045 PM PEAK TRAFFIC

XXXXX = YEAR 2055 PM PEAK TRAFFIC

INTERIM REVIEW

THIS DOCUMENT IS RELEASED FOR THE PURPOSE OF INTERIM REVIEW UNDER THE AUTHORITY OF

ANDREW J. BALLARD, PE 59027 JUNE 28, 2019

IT IS NOT TO BE USED FOR CONSTRUCTION PURPOSES.

© 2018

Texas Department of Transportation

TEDSI INFRASTRUCTURE GROUP
Consulting Engineers
1201 E. Expressway 83
Mission, Texas 78572
(956) 424-7898
TBPE F-1640

JACOBS
JACOBS ENGINEERING GROUP INC. FIRM #2966

LOOP 1604
PM PEAK TRAFFIC PROJECTIONS
BUILD CONDITION

SHEET 12 OF 34

DESIGN CK	FED.RD. DIV.NO.			HIGHWAY NO.
CHECK PK				LOOP 1604
	STATE	DISTRICT	COUNTY	SHEET NO.
GRAPHICS CC	TX	SAN ANTONIO	BEXAR	12
CHECK PK	CONTROL	SECTION	JOB	
	2452	01	068	

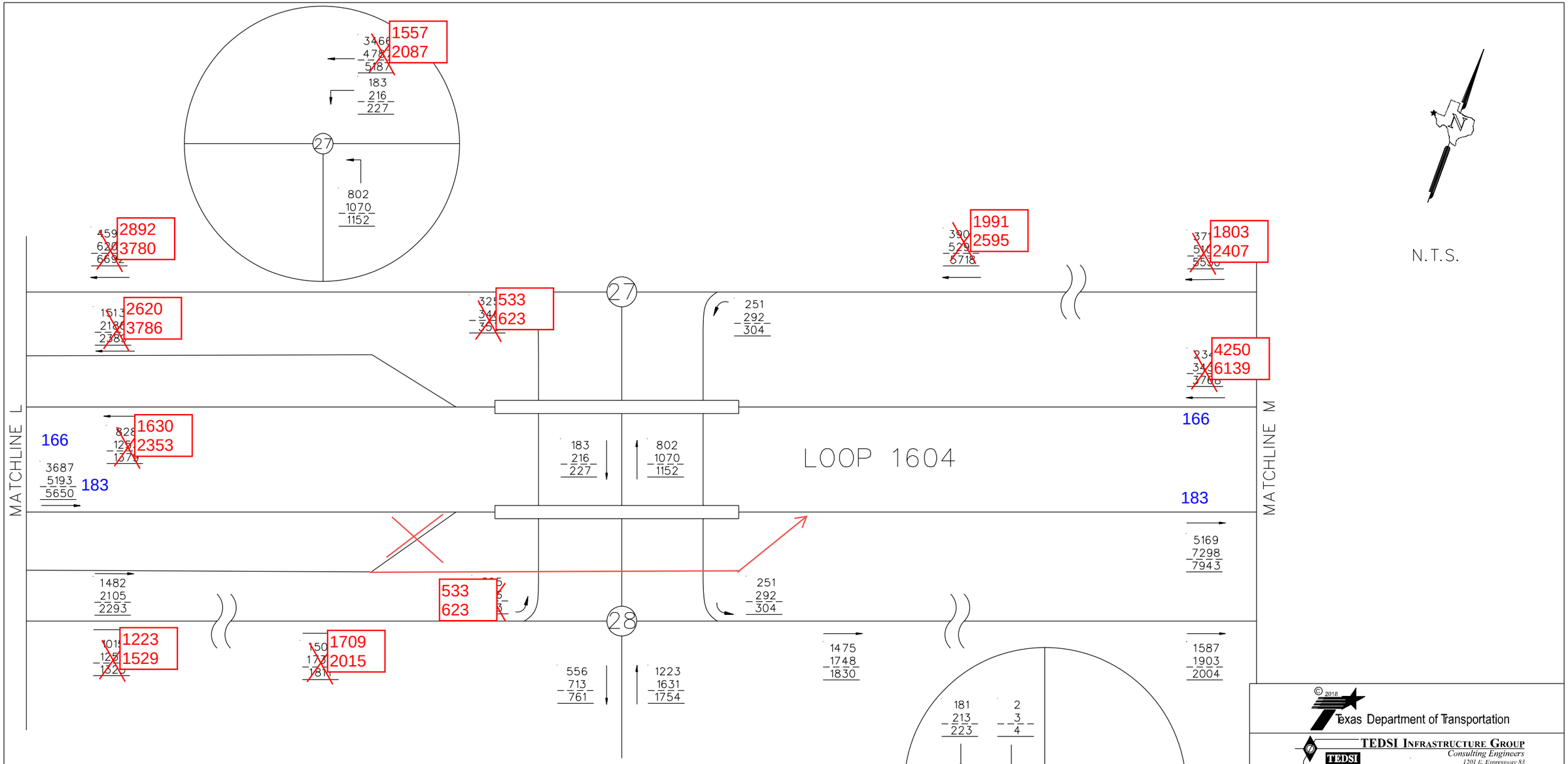

LEGEND

→ = TRAVEL DIRECTION

XXXXX = YEAR 2025 PM PEAK TRAFFIC

XXXXX = YEAR 2045 PM PEAK TRAFFIC

XXXXX = YEAR 2055 PM PEAK TRAFFIC

INTERIM REVIEW

THIS DOCUMENT IS RELEASED FOR THE PURPOSE OF INTERIM REVIEW UNDER THE AUTHORITY OF

ANDREW J. BALLARD, PE 59027 JUNE 28, 2019

IT IS NOT TO BE USED FOR CONSTRUCTION PURPOSES.

© 2018

Texas Department of Transportation

TEDSI INFRASTRUCTURE GROUP
Consulting Engineers
1201 E. Expressway 83
Mission, Texas 78572
(956) 424-7898
TBPE F-1640

JACOBS
JACOBS ENGINEERING GROUP INC. FIRM •2966

LOOP 1604
PM PEAK TRAFFIC PROJECTIONS
BUILD CONDITION

SHEET 13 OF 34

DESIGN CK	FED.RD. DIV.NO.			HIGHWAY NO.
				LOOP 1604
CHECK PK	STATE	DISTRICT	COUNTY	SHEET NO.
GRAPHICS CC	TX	SAN ANTONIO	BEXAR	13
CHECK PK	CONTROL	SECTION	JOB	
	2452	01	068	

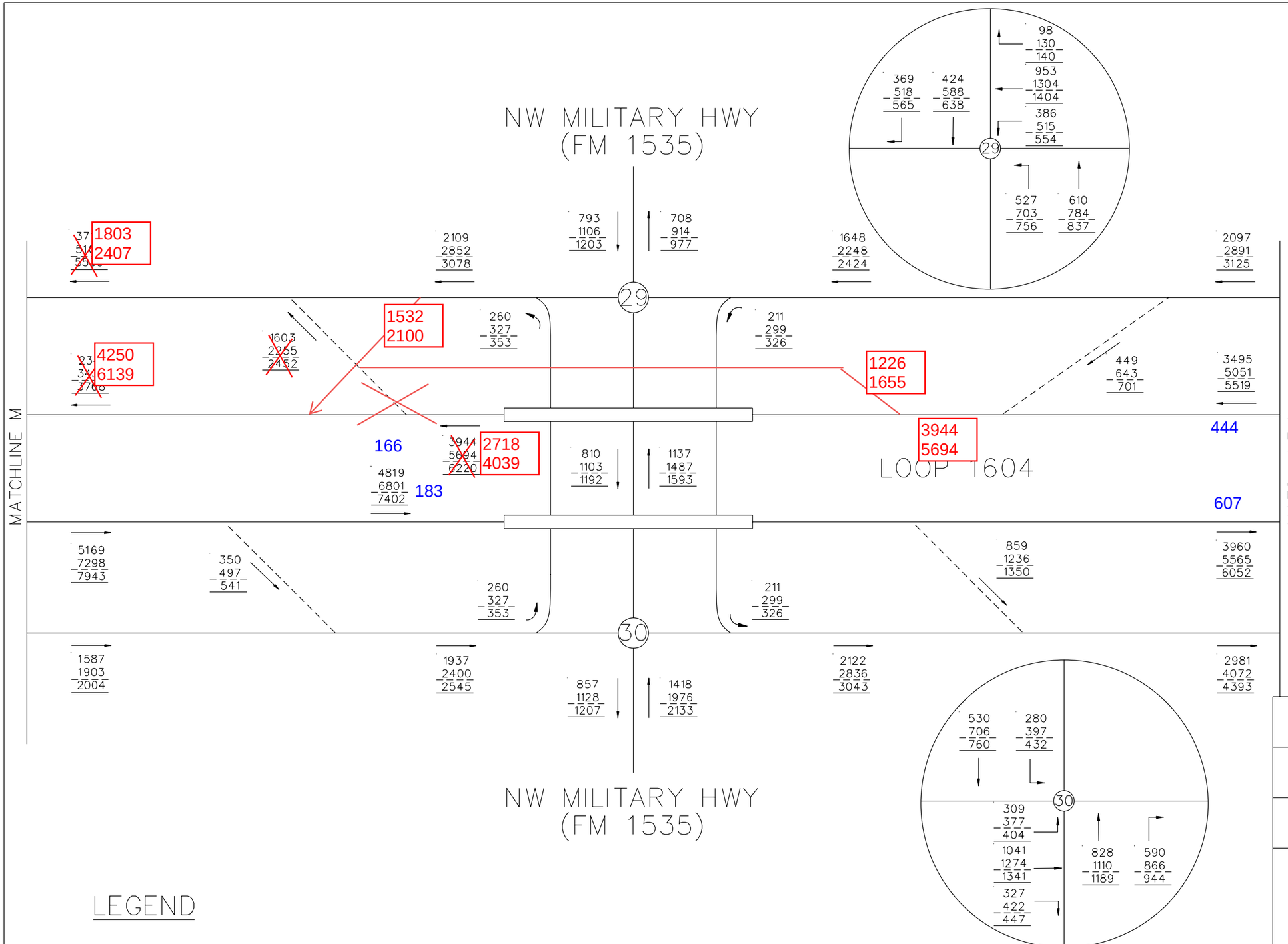

N.T.S.

LEGEND

→ = TRAVEL DIRECTION

XXXXX = YEAR 2025 PM PEAK TRAFFIC

XXXXX = YEAR 2045 PM PEAK TRAFFIC

XXXXX = YEAR 2055 PM PEAK TRAFFIC

INTERIM REVIEW

THIS DOCUMENT IS RELEASED FOR THE PURPOSE OF INTERIM REVIEW UNDER THE AUTHORITY OF

ANDREW J. BALLARD, PE 59027 JUNE 28, 2019

IT IS NOT TO BE USED FOR CONSTRUCTION PURPOSES.

© 2018

Texas Department of Transportation

TEDSI INFRASTRUCTURE GROUP
Consulting Engineers
1201 E. Expressway 83
Mission, Texas 78572
(956) 424-7898
TBPE F-1640

JACOBS®
JACOBS ENGINEERING GROUP INC. FIRM #2966

LOOP 1604
PM PEAK TRAFFIC PROJECTIONS
BUILD CONDITION

SHEET 14 OF 34

DESIGN CK	FED.RD. DIV.NO.			HIGHWAY NO.
CHECK PK				LOOP 1604
	STATE	DISTRICT	COUNTY	SHEET NO.
GRAPHICS CC	TX	SAN ANTONIO	BEXAR	14
CHECK PK	CONTROL	SECTION	JOB	
	2452	01	068	

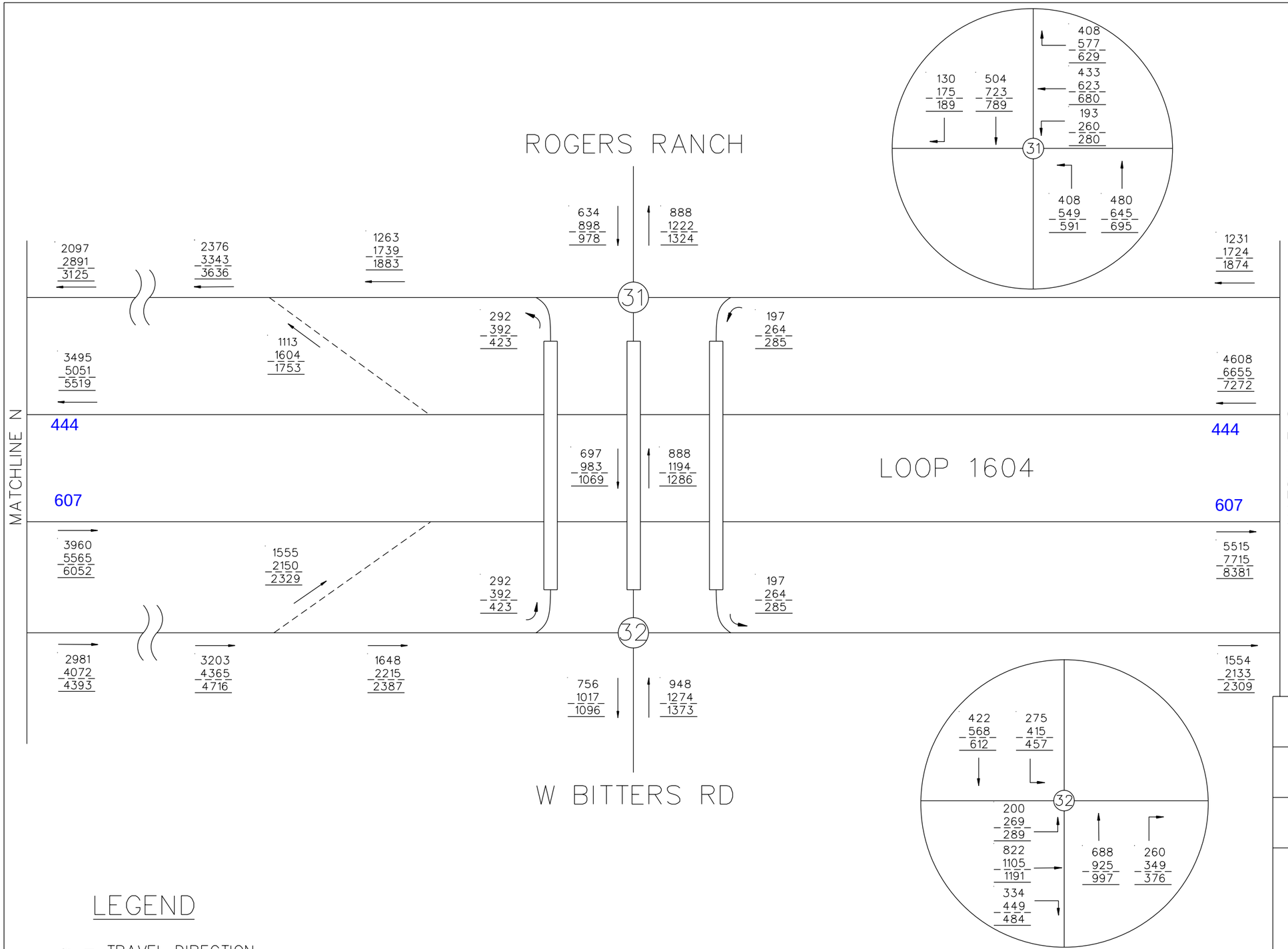

N.T.S.

LEGEND

→ = TRAVEL DIRECTION

XXXXX = YEAR 2025 PM PEAK TRAFFIC

XXXXX = YEAR 2045 PM PEAK TRAFFIC

XXXXX = YEAR 2055 PM PEAK TRAFFIC

INTERIM REVIEW

THIS DOCUMENT IS RELEASED FOR THE PURPOSE OF INTERIM REVIEW UNDER THE AUTHORITY OF

ANDREW J. BALLARD, PE 59027 JUNE 28, 2019

IT IS NOT TO BE USED FOR CONSTRUCTION PURPOSES.

© 2018

Texas Department of Transportation

TEDSI INFRASTRUCTURE GROUP
Consulting Engineers
1201 E. Expressway 83
Mission, Texas 78572
(956) 424-7898
TBPE F-1640

JACOBS®
JACOBS ENGINEERING GROUP INC. FIRM #2966

LOOP 1604
PM PEAK TRAFFIC PROJECTIONS
BUILD CONDITION

SHEET 15 OF 34

DESIGN CK	FED.RD. DIV.NO.			HIGHWAY NO.
CHECK PK				LOOP 1604
	STATE	DISTRICT	COUNTY	SHEET NO.
GRAPHICS CC	TX	SAN ANTONIO	BEXAR	15
CHECK PK	CONTROL	SECTION	JOB	
	2452	01	068	

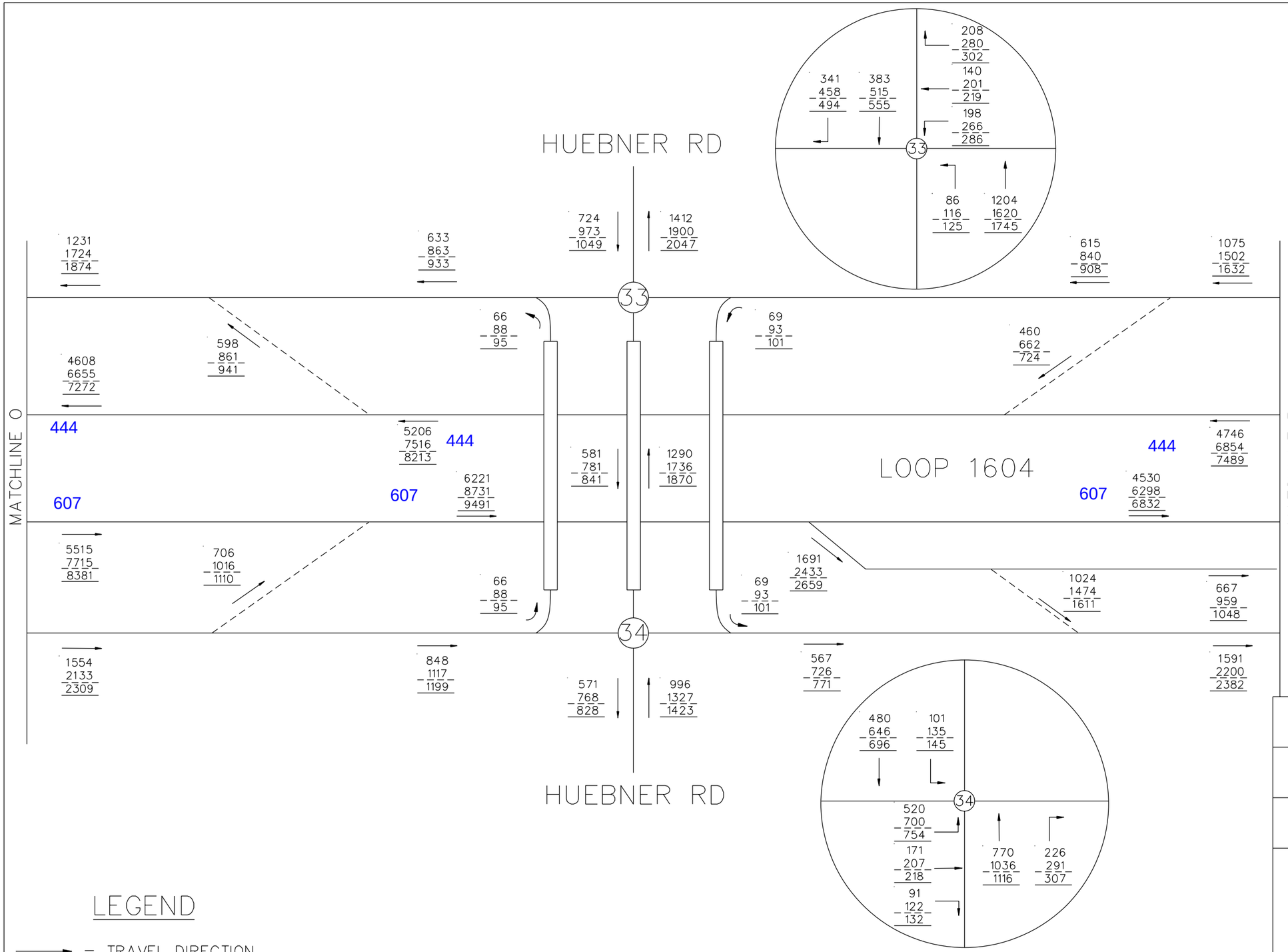

N.T.S.

LEGEND

→ = TRAVEL DIRECTION

XXXXX = YEAR 2025 PM PEAK TRAFFIC

XXXXX = YEAR 2045 PM PEAK TRAFFIC

XXXXX = YEAR 2055 PM PEAK TRAFFIC

INTERIM REVIEW

THIS DOCUMENT IS RELEASED FOR THE PURPOSE OF INTERIM REVIEW UNDER THE AUTHORITY OF

ANDREW J. BALLARD, PE 59027 JUNE 28, 2019

IT IS NOT TO BE USED FOR CONSTRUCTION PURPOSES.

© 2018

Texas Department of Transportation

TEDSI INFRASTRUCTURE GROUP
Consulting Engineers
1201 E. Expressway 83
Mission, Texas 78572
(956) 424-7698
TBPE F-1640

JACOBS
JACOBS ENGINEERING GROUP INC. FIRM #2966

LOOP 1604
PM PEAK TRAFFIC PROJECTIONS
BUILD CONDITION

SHEET 16 OF 34

DESIGN CK	FED.RD. DIV.NO.			HIGHWAY NO.
				LOOP 1604
CHECK PK	STATE	DISTRICT	COUNTY	SHEET NO.
GRAPHICS CC	TX	SAN ANTONIO	BEXAR	16
	CONTROL	SECTION	JOB	
CHECK PK	2452	01	068	

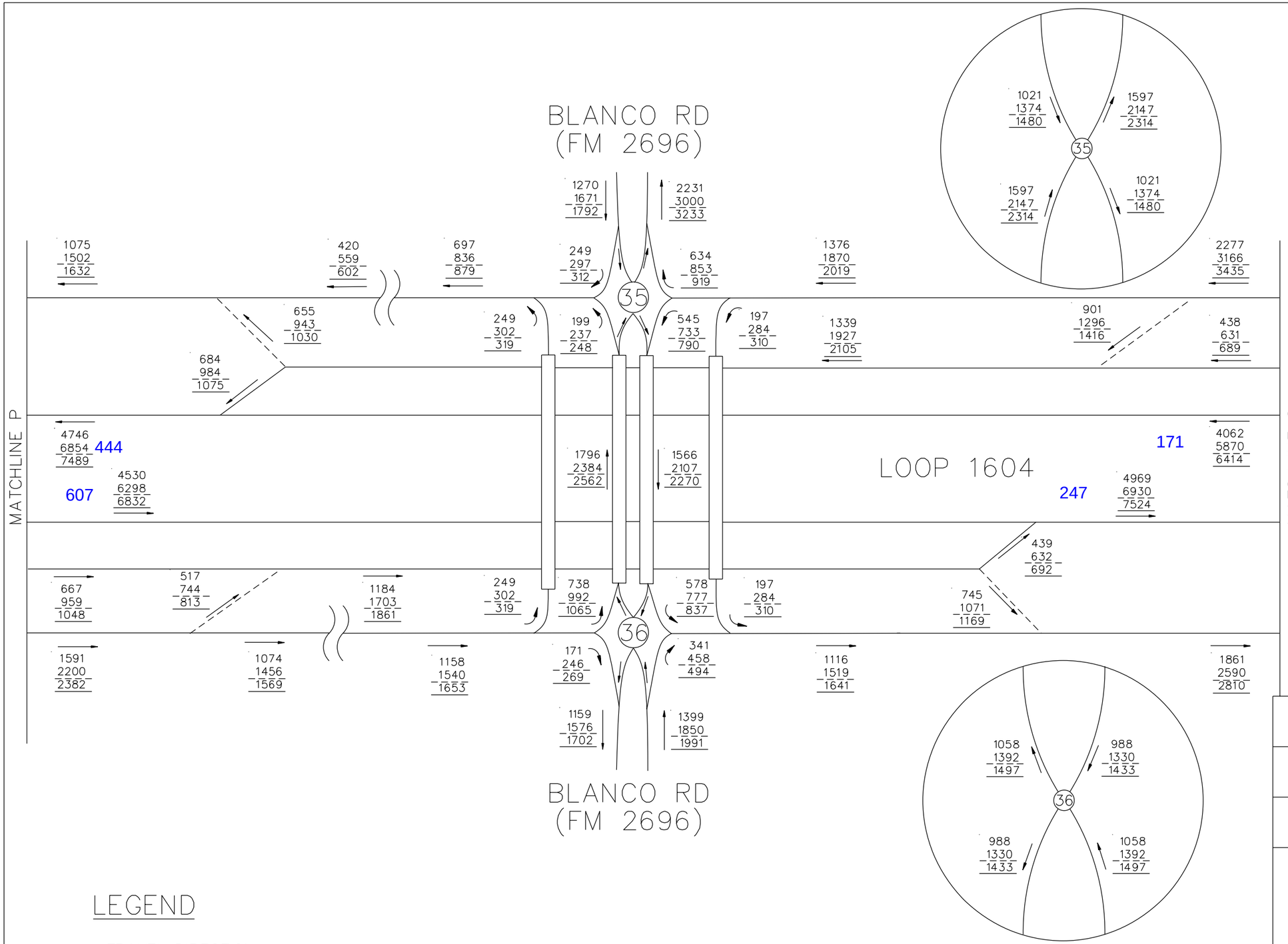

LEGEND

→ = TRAVEL DIRECTION

XXXXX = YEAR 2025 PM PEAK TRAFFIC

XXXXX = YEAR 2045 PM PEAK TRAFFIC

XXXXX = YEAR 2055 PM PEAK TRAFFIC

INTERIM REVIEW

THIS DOCUMENT IS RELEASED FOR THE PURPOSE OF INTERIM REVIEW UNDER THE AUTHORITY OF

ANDREW J. BALLARD, PE 59027 JUNE 28, 2019

IT IS NOT TO BE USED FOR CONSTRUCTION PURPOSES.

© 2018

Texas Department of Transportation

TEDSI INFRASTRUCTURE GROUP
Consulting Engineers
1201 E. Expressway 83
Mission, Texas 78572
(956) 424-7898
TBPE F-1640

JACOBS
JACOBS ENGINEERING GROUP INC. FIRM •2966

LOOP 1604
PM PEAK TRAFFIC PROJECTIONS
BUILD CONDITION

SHEET 17 OF 34

DESIGN CK	FED.RD. DIV.NO.			HIGHWAY NO.
CHECK PK				LOOP 1604
	STATE	DISTRICT	COUNTY	SHEET NO.
GRAPHICS CC	TX	SAN ANTONIO	BEXAR	17
	CONTROL	SECTION	JOB	
CHECK PK	2452	01	068	

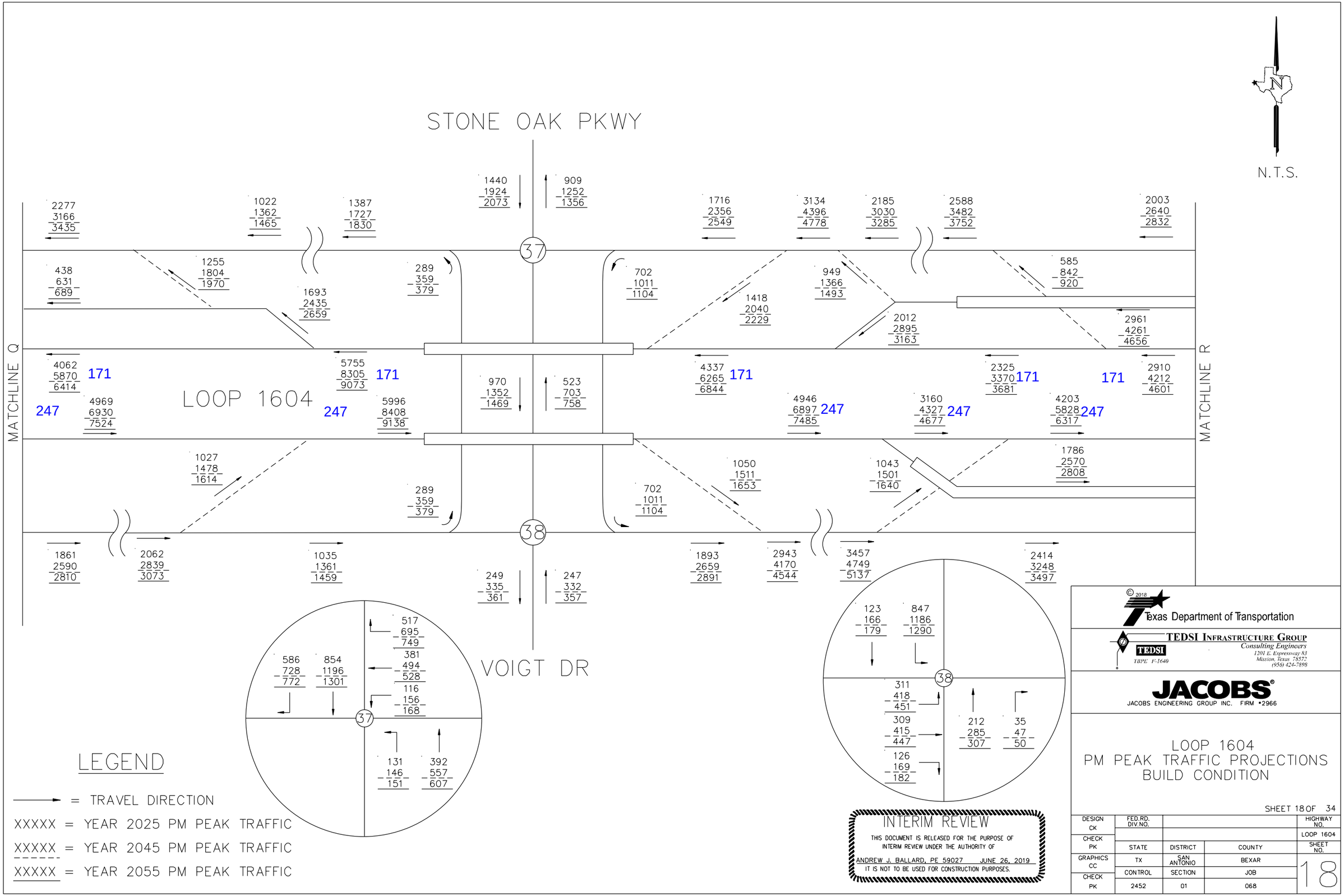
N.T.S.
STONE OAK PKWY
LOOP 1604
VOIGT DR
MATCHLINE Q
MATCHLINE R
37
38
2277 3166 3435
1022 1362 1465
1387 1727 1830
1440 1924 2073
909 1252 1356
1716 2356 2549
3134 4396 4778
2185 3030 3285
2588 3482 3752
2003 2640 2832
438 631 689
1255 1804 1970
1693 2435 2659
289 359 379
702 1011 1104
1418 2040 2229
949 1366 1493
2012 2895 3163
585 842 920
2961 4261 4656
4062 5870 6414
171
247
4969 6930 7524
5755 8305 9073
171
247
5996 8408 9138
970 1352 1469
523 703 758
4337 6265 6844
171
4946 6897 7485
247
3160 4327 4677
247
2325 3370 3681
171
4203 5828 6317
247
171
2910 4212 4601
1027 1478 1614
289 359 379
702 1011 1104
1050 1511 1653
1043 1501 1640
1786 2570 2808
1861 2590 2810
2062 2839 3073
1035 1361 1459
249 335 361
247 332 357
1893 2659 2891
2943 4170 4544
3457 4749 5137
2414 3248 3497
517 695 749
586 728 772
854 1196 1301
381 494 528
116 156 168
131 146 151
392 557 607
123 166 179
847 1186 1290
311 418 451
309 415 447
126 169 182
212 285 307
35 47 50
LEGEND
= TRAVEL DIRECTION
XXXXX = YEAR 2025 PM PEAK TRAFFIC
XXXXX = YEAR 2045 PM PEAK TRAFFIC
XXXXX = YEAR 2055 PM PEAK TRAFFIC
INTERIM REVIEW
THIS DOCUMENT IS RELEASED FOR THE PURPOSE OF INTERIM REVIEW UNDER THE AUTHORITY OF
ANDREW J. BALLARD, PE 59027 JUNE 26, 2019
IT IS NOT TO BE USED FOR CONSTRUCTION PURPOSES.
© 2018
Texas Department of Transportation
TEDSI INFRASTRUCTURE GROUP
Consulting Engineers
1201 E. Expressway 83
Mission, Texas 78572
(956) 424-7898
TBPE F-1640
JACOBS
JACOBS ENGINEERING GROUP INC. FIRM #2966
LOOP 1604
PM PEAK TRAFFIC PROJECTIONS
BUILD CONDITION
SHEET 18 OF 34
DESIGN CK
FED.RD. DIV.NO.
HIGHWAY NO.
LOOP 1604
CHECK PK
STATE
DISTRICT
COUNTY
SHEET NO.
GRAPHICS CC
TX
SAN ANTONIO
BEXAR
18
CONTROL
SECTION
JOB
CHECK PK
2452
01
068

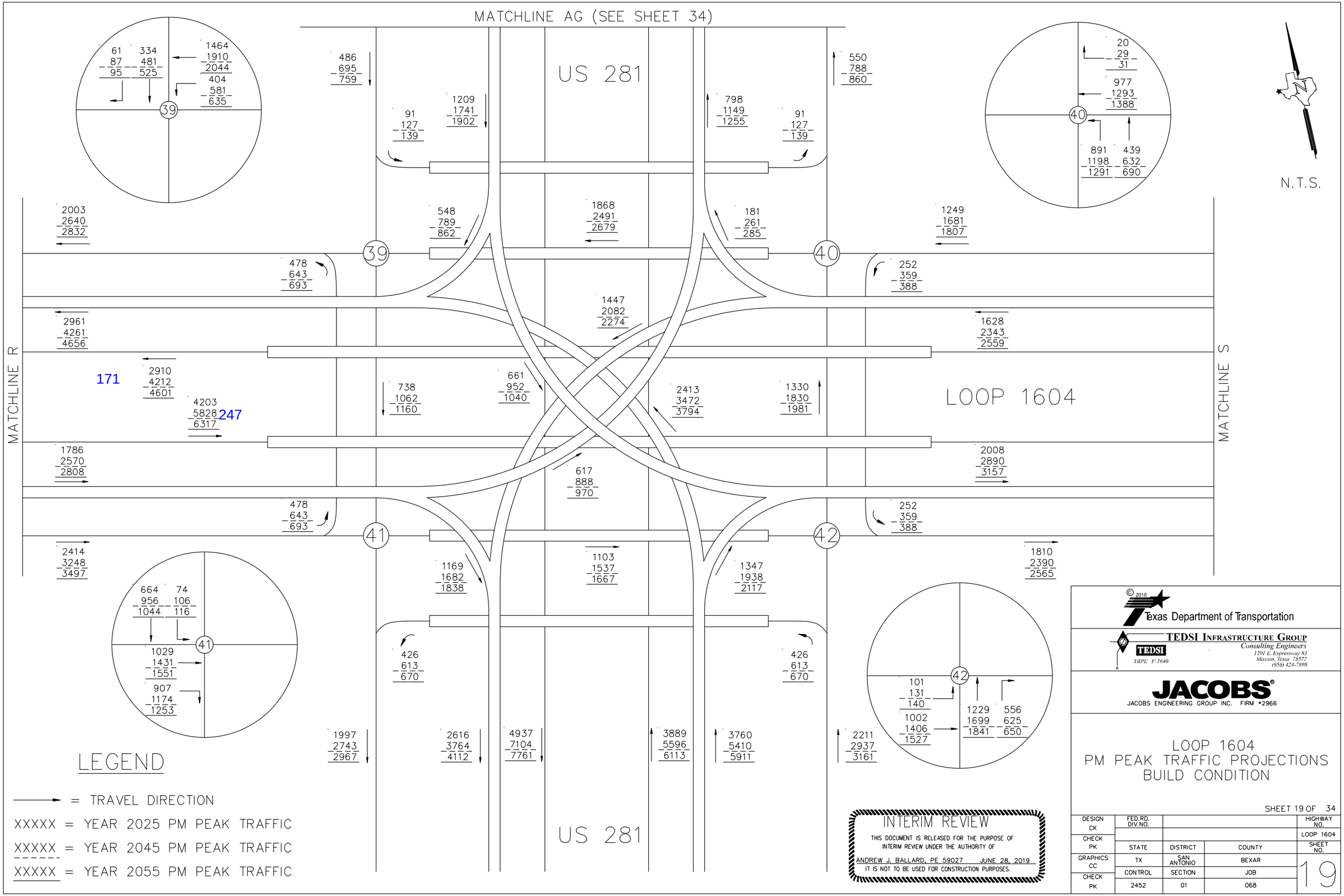
MATCHLINE AG (SEE SHEET 34)
US 281
LOOP 1604
MATCHLINE R
MATCHLINE S
N.T.S.
39
40
41
42
61 87 95
334 481 525
1464 1910 2044
404 581 635
20 29 31
977 1293 1388
891 1198 1291
439 632 690
664 956 1044
74 106 116
1029 1431 1551
907 1174 1253
101 131 140
1002 1406 1527
1229 1699 1841
556 625 650
2003 2640 2832
486 695 759
91 127 139
1209 1741 1902
798 1149 1255
550 788 860
548 789 862
1868 2491 2679
181 261 285
1249 1681 1807
478 643 693
252 359 388
1447 2082 2274
2961 4261 4656
1628 2343 2559
171
2910 4212 4601
4203 5828 6317
247
738 1062 1160
661 952 1040
2413 3472 3794
1330 1830 1981
1786 2570 2808
2008 2890 3157
617 888 970
478 643 693
252 359 388
2414 3248 3497
1810 2390 2565
1169 1682 1838
1103 1537 1667
1347 1938 2117
426 613 670
426 613 670
1997 2743 2967
2616 3764 4112
4937 7104 7761
3889 5596 6113
3760 5410 5911
2211 2937 3161
LEGEND
= TRAVEL DIRECTION
XXXXX = YEAR 2025 PM PEAK TRAFFIC
XXXXX = YEAR 2045 PM PEAK TRAFFIC
XXXXX = YEAR 2055 PM PEAK TRAFFIC
INTERIM REVIEW
THIS DOCUMENT IS RELEASED FOR THE PURPOSE OF INTERIM REVIEW UNDER THE AUTHORITY OF
ANDREW J. BALLARD, PE 59027 JUNE 28, 2019
IT IS NOT TO BE USED FOR CONSTRUCTION PURPOSES.
© 2018
Texas Department of Transportation
TEDSI INFRASTRUCTURE GROUP
Consulting Engineers
1201 E. Expressway 83
Mission, Texas 78572
(956) 424-7898
TBPE F-1640
JACOBS
JACOBS ENGINEERING GROUP INC. FIRM •2966
LOOP 1604
PM PEAK TRAFFIC PROJECTIONS
BUILD CONDITION
SHEET 19 OF 34
DESIGN CK
CHECK PK
GRAPHICS CC
CHECK PK
FED.RD. DIV.NO.
HIGHWAY NO.
LOOP 1604
STATE
DISTRICT
COUNTY
SHEET NO.
TX
SAN ANTONIO
BEXAR
19
CONTROL
SECTION
JOB
2452
01
068

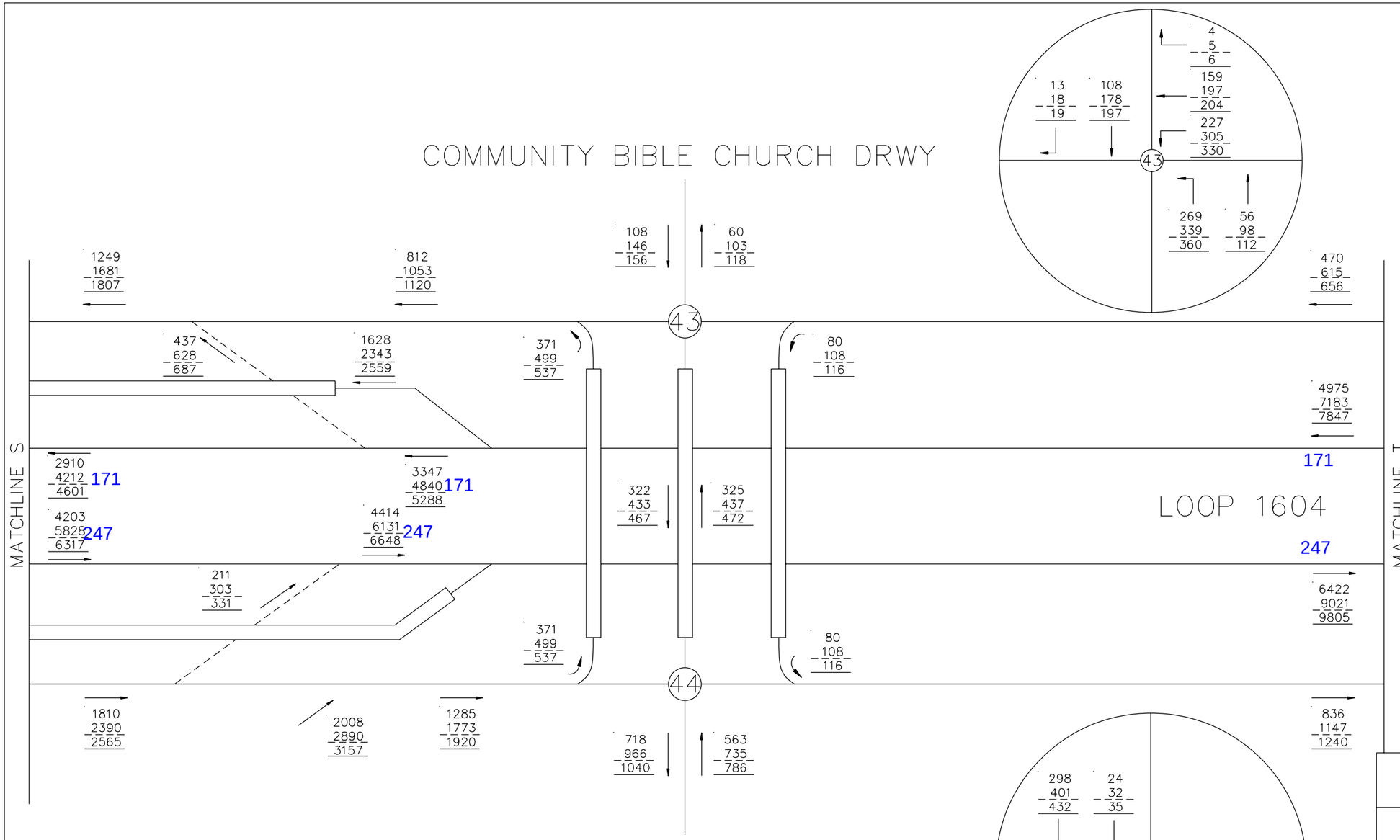

N.T.S.

LEGEND

→ = TRAVEL DIRECTION

XXXXX = YEAR 2025 PM PEAK TRAFFIC

XXXXX = YEAR 2045 PM PEAK TRAFFIC

XXXXX = YEAR 2055 PM PEAK TRAFFIC

INTERIM REVIEW

THIS DOCUMENT IS RELEASED FOR THE PURPOSE OF INTERIM REVIEW UNDER THE AUTHORITY OF

ANDREW J. BALLARD, PE 59027 JUNE 28, 2019

IT IS NOT TO BE USED FOR CONSTRUCTION PURPOSES.

© 2018

Texas Department of Transportation

TEDSI INFRASTRUCTURE GROUP
Consulting Engineers
1201 E. Expressway 83
Mission, Texas 78572
(956) 424-7898
TBPE F-1640

JACOBS®
JACOBS ENGINEERING GROUP INC. FIRM #2966

LOOP 1604
PM PEAK TRAFFIC PROJECTIONS
BUILD CONDITION

SHEET 20 OF 34

DESIGN CK	FED.RD. DIV.NO.			HIGHWAY NO.
CHECK PK				LOOP 1604
	STATE	DISTRICT	COUNTY	SHEET NO.
GRAPHICS CC	TX	SAN ANTONIO	BEXAR	20
CHECK PK	CONTROL	SECTION	JOB	
	2452	01	068	

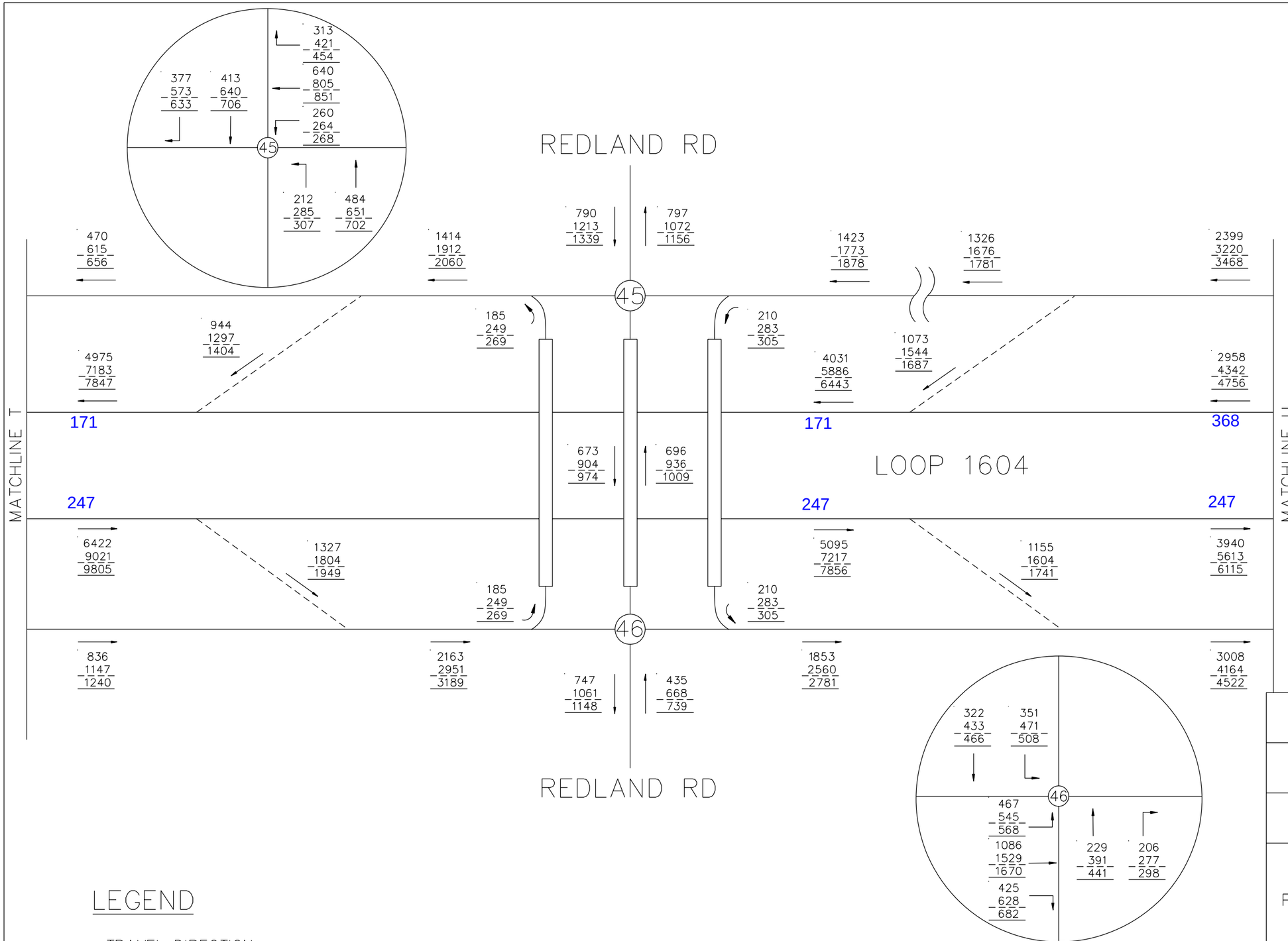

N.T.S.

LEGEND

→ = TRAVEL DIRECTION

XXXXX = YEAR 2025 PM PEAK TRAFFIC

XXXXX = YEAR 2045 PM PEAK TRAFFIC

XXXXX = YEAR 2055 PM PEAK TRAFFIC

INTERIM REVIEW

THIS DOCUMENT IS RELEASED FOR THE PURPOSE OF INTERIM REVIEW UNDER THE AUTHORITY OF

ANDREW J. BALLARD, PE 59027 JUNE 28, 2019

IT IS NOT TO BE USED FOR CONSTRUCTION PURPOSES.

© 2018

Texas Department of Transportation

TEDSI INFRASTRUCTURE GROUP
Consulting Engineers
1201 E. Expressway 83
Mission, Texas 78572
(956) 424-7898
TBPE F-1640

JACOBS
JACOBS ENGINEERING GROUP INC. FIRM #2966

LOOP 1604
PM PEAK TRAFFIC PROJECTIONS
BUILD CONDITION

SHEET 21 OF 34

DESIGN	FED.RD. DIV.NO.			HIGHWAY NO.
CK				LOOP 1604
CHECK	STATE	DISTRICT	COUNTY	SHEET NO.
PK	TX	SAN ANTONIO	BEXAR	21
GRAPHICS	CONTROL	SECTION	JOB	
CC	2452	01	068	
CHECK				
PK				

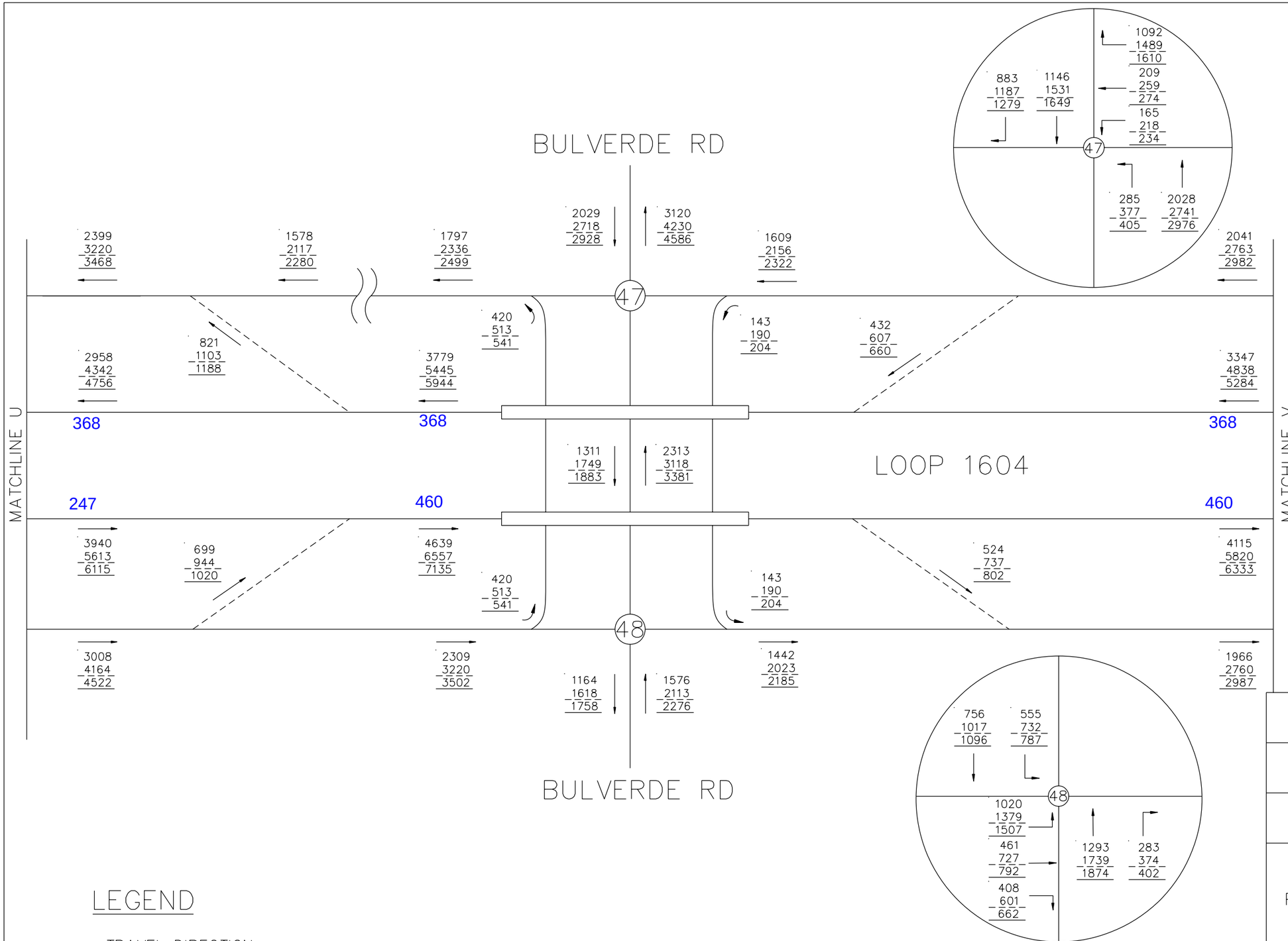

N.T.S.

LEGEND

→ = TRAVEL DIRECTION

XXXXX = YEAR 2025 PM PEAK TRAFFIC

XXXXX = YEAR 2045 PM PEAK TRAFFIC

XXXXX = YEAR 2055 PM PEAK TRAFFIC

INTERIM REVIEW

THIS DOCUMENT IS RELEASED FOR THE PURPOSE OF INTERIM REVIEW UNDER THE AUTHORITY OF

ANDREW J. BALLARD, PE 59027 JUNE 28, 2019

IT IS NOT TO BE USED FOR CONSTRUCTION PURPOSES.

© 2018 Texas Department of Transportation

TEDSI INFRASTRUCTURE GROUP
Consulting Engineers
1201 E. Expressway 83
Mission, Texas 78572
(956) 424-7898
TBPE F-1640

JACOBS
JACOBS ENGINEERING GROUP INC. FIRM #2966

LOOP 1604
PM PEAK TRAFFIC PROJECTIONS
BUILD CONDITION

SHEET 22 OF 34

DESIGN CK	FED.RD. DIV.NO.			HIGHWAY NO.
CHECK PK				LOOP 1604
	STATE	DISTRICT	COUNTY	SHEET NO.
GRAPHICS CC	TX	SAN ANTONIO	BEXAR	22
CHECK PK	CONTROL	SECTION	JOB	
	2452	01	068	

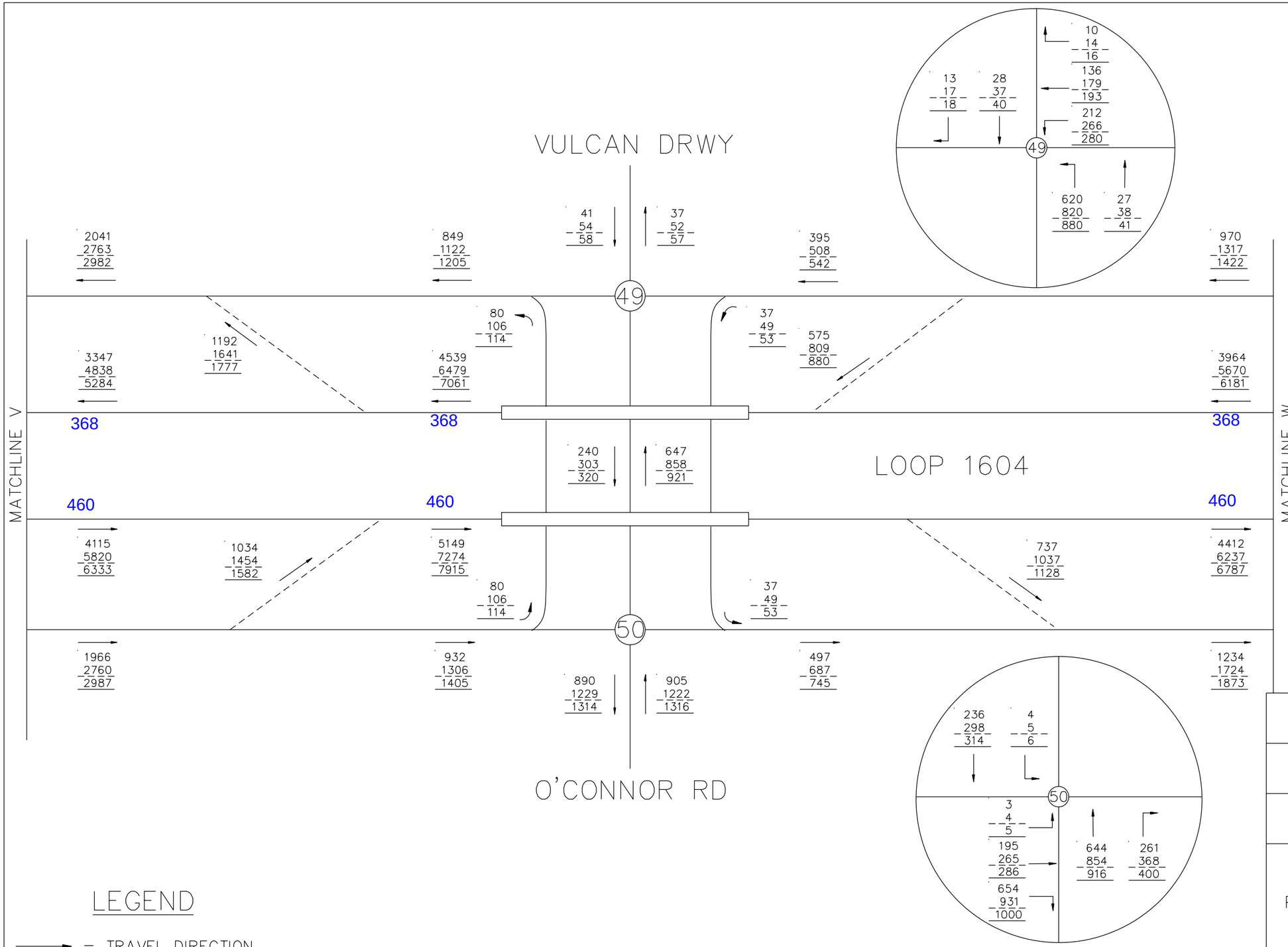

N.T.S.

LEGEND

→ = TRAVEL DIRECTION

XXXXX = YEAR 2025 PM PEAK TRAFFIC

XXXXX = YEAR 2045 PM PEAK TRAFFIC

XXXXX = YEAR 2055 PM PEAK TRAFFIC

INTERIM REVIEW

THIS DOCUMENT IS RELEASED FOR THE PURPOSE OF INTERIM REVIEW UNDER THE AUTHORITY OF

ANDREW J. BALLARD, PE 59027 JUNE 28, 2019

IT IS NOT TO BE USED FOR CONSTRUCTION PURPOSES.

© 2018

Texas Department of Transportation

TEDSI INFRASTRUCTURE GROUP
Consulting Engineers
1201 E. Expressway 83
Mission, Texas 78572
(956) 424-7898
TBPE F-1640

JACOBS
JACOBS ENGINEERING GROUP INC. FIRM #2966

LOOP 1604
PM PEAK TRAFFIC PROJECTIONS
BUILD CONDITION

SHEET 23 OF 34

DESIGN CK	FED.RD. DIV.NO.			HIGHWAY NO.
				LOOP 1604
CHECK PK	STATE	DISTRICT	COUNTY	SHEET NO.
GRAPHICS CC	TX	SAN ANTONIO	BEXAR	23
	CONTROL	SECTION	JOB	
CHECK PK	2452	01	068	

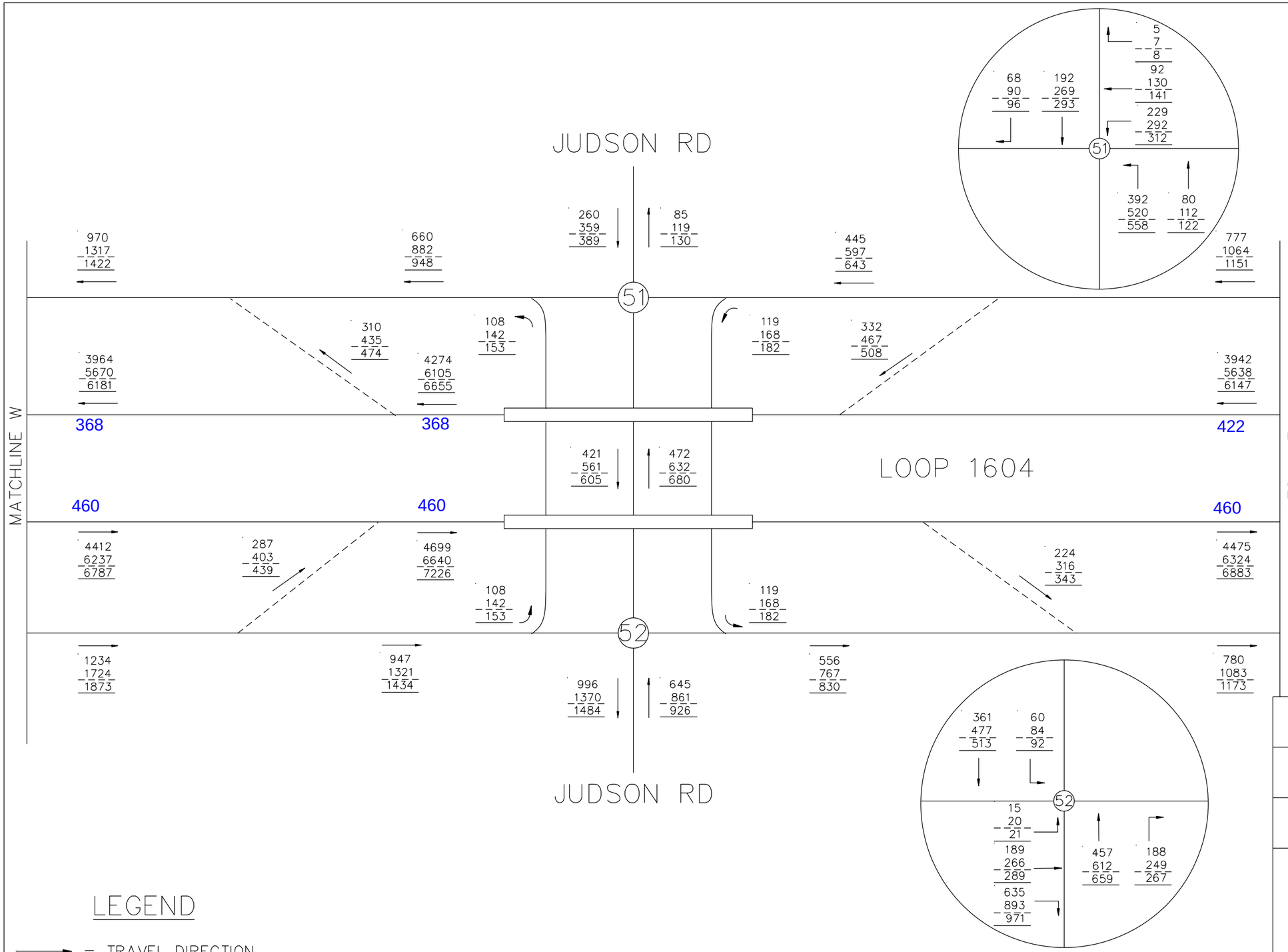

N.T.S.

LEGEND

→ = TRAVEL DIRECTION

XXXXX = YEAR 2025 PM PEAK TRAFFIC

XXXXX = YEAR 2045 PM PEAK TRAFFIC

XXXXX = YEAR 2055 PM PEAK TRAFFIC

INTERIM REVIEW

THIS DOCUMENT IS RELEASED FOR THE PURPOSE OF INTERIM REVIEW UNDER THE AUTHORITY OF

ANDREW J. BALLARD, PE 59027 JUNE 28, 2019

IT IS NOT TO BE USED FOR CONSTRUCTION PURPOSES.

© 2018

Texas Department of Transportation

TEDSI INFRASTRUCTURE GROUP
Consulting Engineers
1201 E. Expressway 83
Mission, Texas 78572
(956) 424-7898
TBPE F-1640

JACOBS
JACOBS ENGINEERING GROUP INC. FIRM #2966

LOOP 1604
PM PEAK TRAFFIC PROJECTIONS
BUILD CONDITION

SHEET 24 OF 34

DESIGN CK	FED.RD. DIV.NO.			HIGHWAY NO.
CHECK PK				LOOP 1604
	STATE	DISTRICT	COUNTY	SHEET NO.
GRAPHICS CC	TX	SAN ANTONIO	BEXAR	24
CHECK PK	CONTROL	SECTION	JOB	
	2452	01	068	

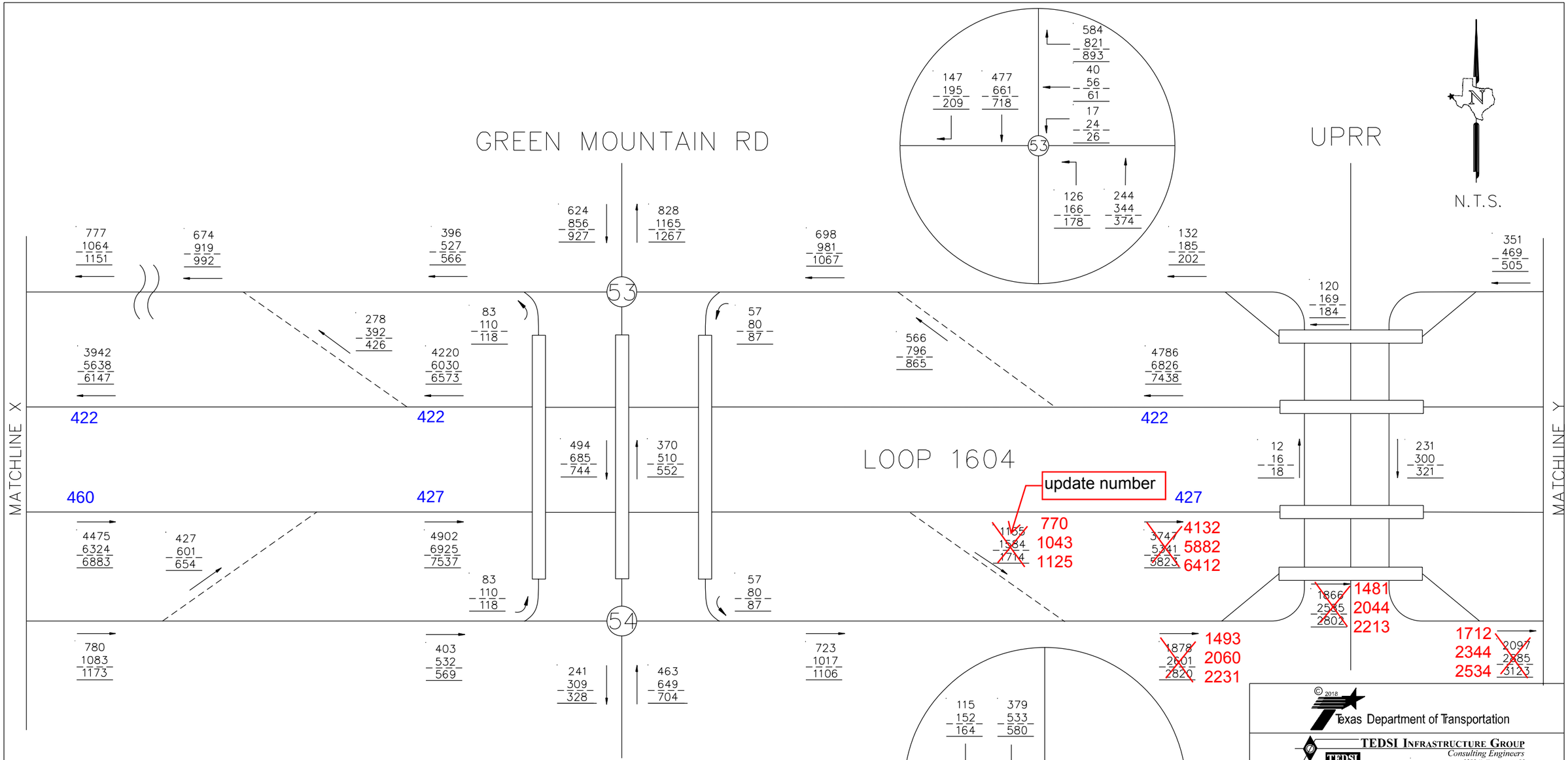

LEGEND

→ = TRAVEL DIRECTION

XXXXX = YEAR 2025 PM PEAK TRAFFIC

XXXXX = YEAR 2045 PM PEAK TRAFFIC

XXXXX = YEAR 2055 PM PEAK TRAFFIC

INTERIM REVIEW

THIS DOCUMENT IS RELEASED FOR THE PURPOSE OF INTERIM REVIEW UNDER THE AUTHORITY OF

ANDREW J. BALLARD, PE 59027 JUNE 28, 2019

IT IS NOT TO BE USED FOR CONSTRUCTION PURPOSES.

© 2018 Texas Department of Transportation

TEDSI INFRASTRUCTURE GROUP
Consulting Engineers
1201 E. Expressway 83
Mission, Texas 78572
(956) 424-7898
TBPE F-1640

JACOBS
JACOBS ENGINEERING GROUP INC. FIRM #2966

LOOP 1604
PM PEAK TRAFFIC PROJECTIONS
BUILD CONDITION

SHEET 25 OF 34

DESIGN CK	FED.RD. DIV.NO.			HIGHWAY NO.
				LOOP 1604
CHECK PK	STATE	DISTRICT	COUNTY	SHEET NO.
GRAPHICS CC	TX	SAN ANTONIO	BEXAR	25
	CONTROL	SECTION	JOB	
CHECK PK	2452	01	068	

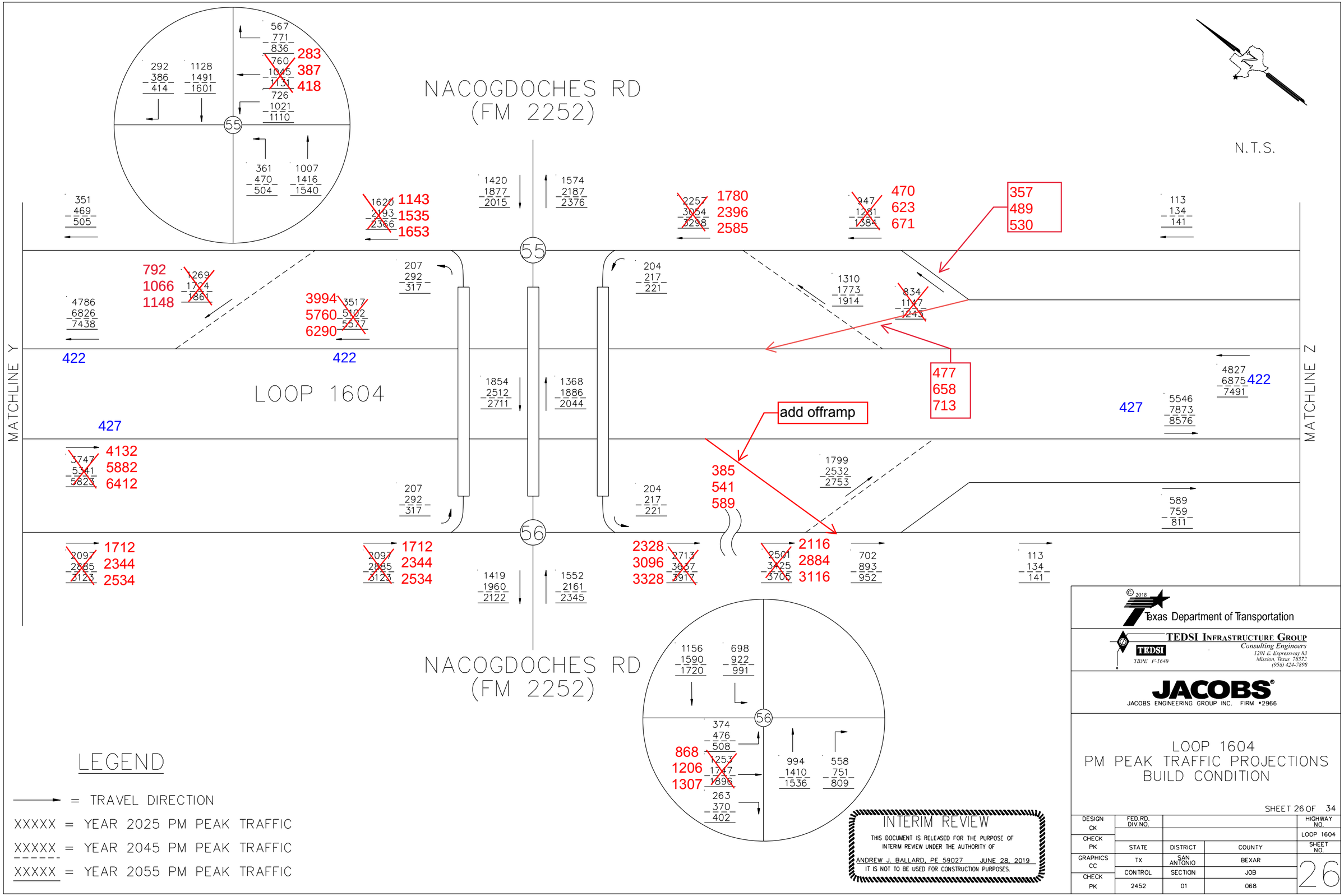
NACOGDOCHES RD
(FM 2252)
N.T.S.
LOOP 1604
MATCHLINE Y
MATCHLINE Z
55
56
add offramp
357
489
530
477
658
713
385
541
589
792
1066
1148
3994
5760
6290
422
427
4132
5882
6412
1712
2344
2534
2328
3096
3328
2116
2884
3116
1143
1535
1653
1780
2396
2585
470
623
671
Texas Department of Transportation
TEDSI INFRASTRUCTURE GROUP
Consulting Engineers
1201 E. Expressway 83
Mission, Texas 78572
(956) 424-7898
TBPE F-1640
JACOBS
JACOBS ENGINEERING GROUP INC. FIRM #2966
LOOP 1604
PM PEAK TRAFFIC PROJECTIONS
BUILD CONDITION
SHEET 26 OF 34
INTERIM REVIEW
THIS DOCUMENT IS RELEASED FOR THE PURPOSE OF INTERIM REVIEW UNDER THE AUTHORITY OF
ANDREW J. BALLARD, PE 59027 JUNE 28, 2019
IT IS NOT TO BE USED FOR CONSTRUCTION PURPOSES.
LEGEND
= TRAVEL DIRECTION
XXXXX = YEAR 2025 PM PEAK TRAFFIC
XXXXX = YEAR 2045 PM PEAK TRAFFIC
XXXXX = YEAR 2055 PM PEAK TRAFFIC
DESIGN CK
CHECK PK
GRAPHICS CC
CHECK PK
FED.RD. DIV.NO.
STATE
DISTRICT
COUNTY
HIGHWAY NO.
LOOP 1604
SHEET NO.
26
TX
SAN ANTONIO
BEXAR
CONTROL
SECTION
JOB
2452
01
068

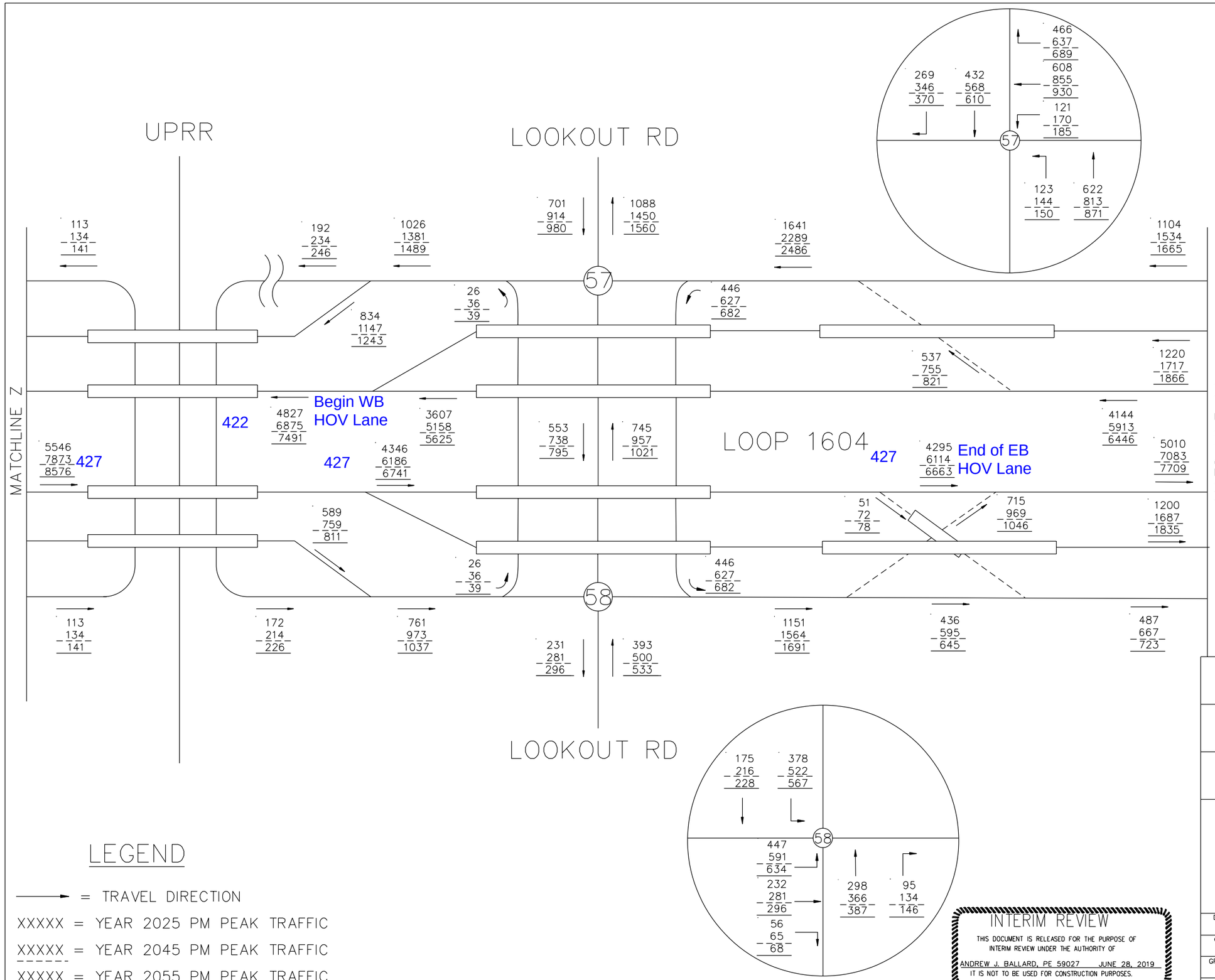

N.T.S.

LEGEND

→ = TRAVEL DIRECTION

XXXXX = YEAR 2025 PM PEAK TRAFFIC

XXXXX = YEAR 2045 PM PEAK TRAFFIC

XXXXX = YEAR 2055 PM PEAK TRAFFIC

INTERIM REVIEW

THIS DOCUMENT IS RELEASED FOR THE PURPOSE OF INTERIM REVIEW UNDER THE AUTHORITY OF ANDREW J. BALLARD, PE 59027 JUNE 28, 2019

IT IS NOT TO BE USED FOR CONSTRUCTION PURPOSES.

© 2018

Texas Department of Transportation

TEDSI INFRASTRUCTURE GROUP
Consulting Engineers
1201 E. Expressway 83
Mission, Texas 78572
(956) 424-7898
TBPE F-1640

JACOBS
JACOBS ENGINEERING GROUP INC. FIRM #2966

LOOP 1604
PM PEAK TRAFFIC PROJECTIONS
BUILD CONDITION

SHEET 27 OF 34

DESIGN CK	FED.RD. DIV.NO.			HIGHWAY NO.
CHECK PK				LOOP 1604
	STATE	DISTRICT	COUNTY	SHEET NO.
GRAPHICS CC	TX	SAN ANTONIO	BEXAR	27
CHECK PK	CONTROL	SECTION	JOB	
	2452	01	068	

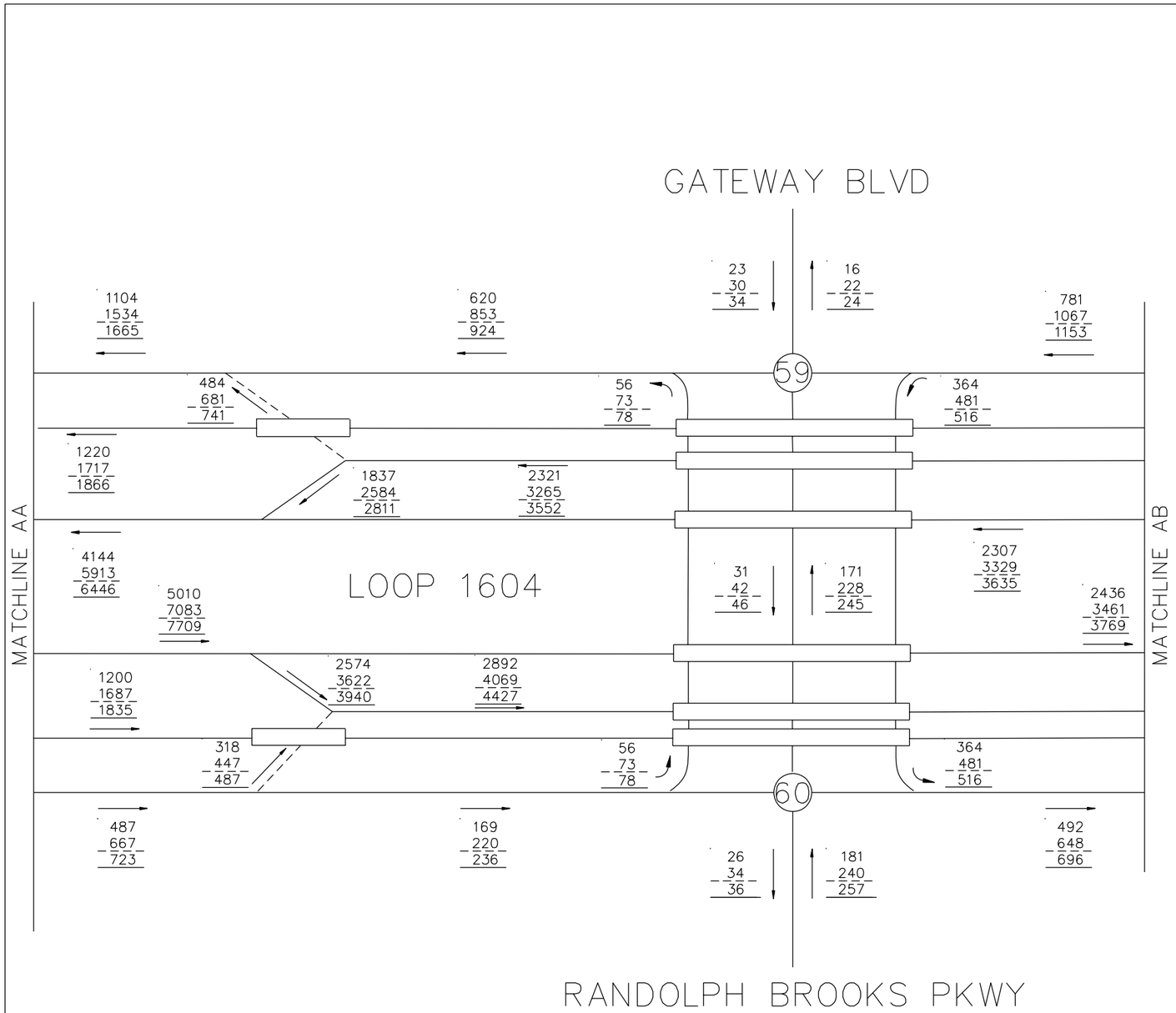

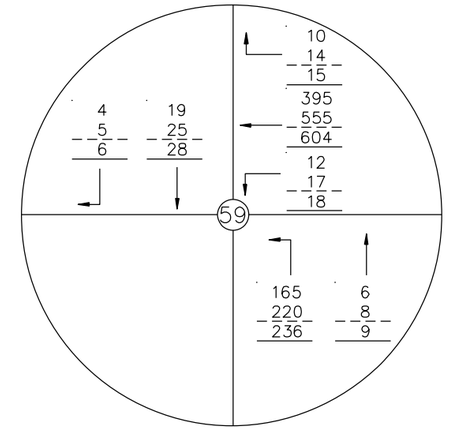

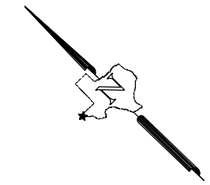

N.T.S.

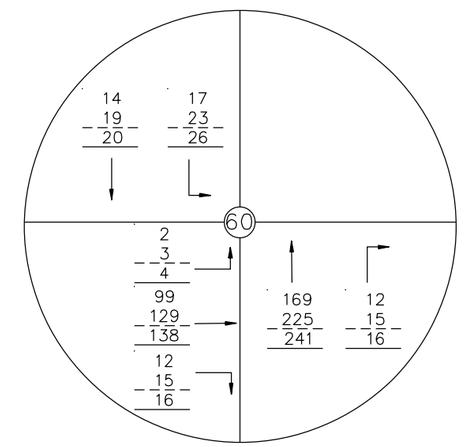

LEGEND

→ = TRAVEL DIRECTION

XXXXX = YEAR 2025 PM PEAK TRAFFIC

XXXXX = YEAR 2045 PM PEAK TRAFFIC

XXXXX = YEAR 2055 PM PEAK TRAFFIC

INTERIM REVIEW

THIS DOCUMENT IS RELEASED FOR THE PURPOSE OF INTERIM REVIEW UNDER THE AUTHORITY OF

ANDREW J. BALLARD, PE 59027 JUNE 28, 2019

IT IS NOT TO BE USED FOR CONSTRUCTION PURPOSES.

© 2018

Texas Department of Transportation

TEDSI INFRASTRUCTURE GROUP
Consulting Engineers
1201 E. Expressway 83
Mission, Texas 78572
(956) 424-7898
TBPE F-1640

JACOBS
JACOBS ENGINEERING GROUP INC. FIRM #2966

LOOP 1604
AM PEAK TRAFFIC PROJECTIONS
BUILD CONDITION

SHEET 28 OF 34

DESIGN CK	FED.RD. DIV.NO.			HIGHWAY NO.
CHECK PK				LOOP 1604
	STATE	DISTRICT	COUNTY	SHEET NO.
GRAPHICS CC	TX	SAN ANTONIO	BEXAR	28
CHECK PK	CONTROL	SECTION	JOB	
	2452	01	068	

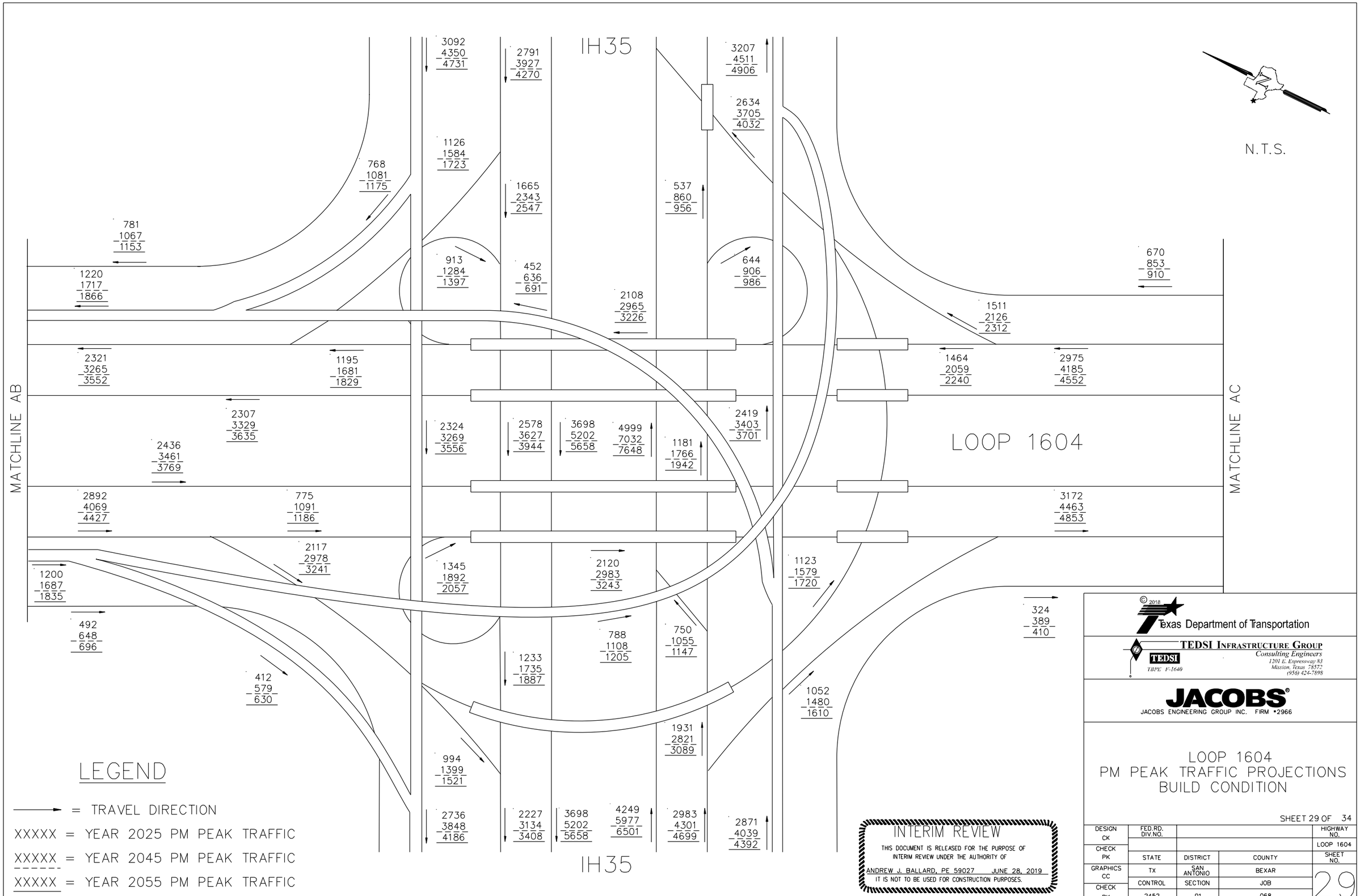
IH35
N.T.S.
MATCHLINE AB
MATCHLINE AC
LOOP 1604
3092 4350 4731
2791 3927 4270
3207 4511 4906
2634 3705 4032
1126 1584 1723
768 1081 1175
1665 2343 2547
537 860 956
781 1067 1153
913 1284 1397
452 636 691
644 906 986
670 853 910
1220 1717 1866
2108 2965 3226
1511 2126 2312
2321 3265 3552
1195 1681 1829
1464 2059 2240
2975 4185 4552
2307 3329 3635
2436 3461 3769
2324 3269 3556
2578 3627 3944
3698 5202 5658
4999 7032 7648
1181 1766 1942
2419 3403 3701
2892 4069 4427
775 1091 1186
3172 4463 4853
2117 2978 3241
1200 1687 1835
1345 1892 2057
2120 2983 3243
1123 1579 1720
492 648 696
788 1108 1205
750 1055 1147
324 389 410
412 579 630
1233 1735 1887
1052 1480 1610
1931 2821 3089
994 1399 1521
2736 3848 4186
2227 3134 3408
3698 5202 5658
4249 5977 6501
2983 4301 4699
2871 4039 4392
IH35
LEGEND
= TRAVEL DIRECTION
XXXXX = YEAR 2025 PM PEAK TRAFFIC
XXXXX = YEAR 2045 PM PEAK TRAFFIC
XXXXX = YEAR 2055 PM PEAK TRAFFIC
INTERIM REVIEW
THIS DOCUMENT IS RELEASED FOR THE PURPOSE OF INTERIM REVIEW UNDER THE AUTHORITY OF
ANDREW J. BALLARD, PE 59027 JUNE 28, 2019
IT IS NOT TO BE USED FOR CONSTRUCTION PURPOSES.
© 2018
Texas Department of Transportation
TEDSI INFRASTRUCTURE GROUP
Consulting Engineers
1201 E. Expressway 83
Mission, Texas 78572
(956) 424-7898
TBPE F-1640
JACOBS
JACOBS ENGINEERING GROUP INC. FIRM #2966
LOOP 1604
PM PEAK TRAFFIC PROJECTIONS
BUILD CONDITION
SHEET 29 OF 34
DESIGN CK
CHECK PK
GRAPHICS CC
CHECK PK
FED.RD. DIV.NO.
STATE
DISTRICT
COUNTY
HIGHWAY NO.
LOOP 1604
SHEET NO.
TX
SAN ANTONIO
BEXAR
CONTROL
SECTION
JOB
2452
01
068
29

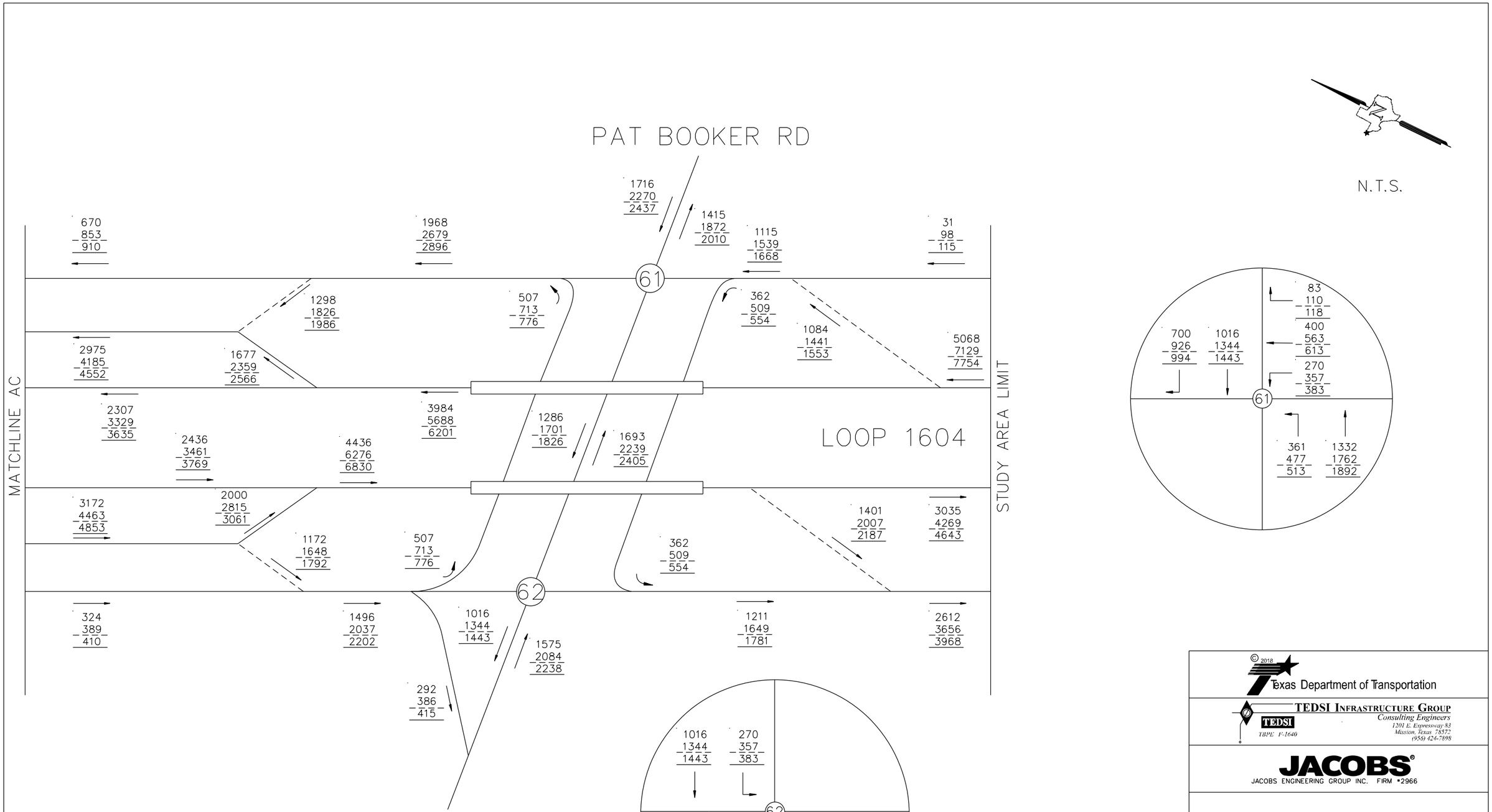

INTERIM REVIEW

THIS DOCUMENT IS RELEASED FOR THE PURPOSE OF INTERIM REVIEW UNDER THE AUTHORITY OF

ANDREW J. BALLARD, PE 59027 JUNE 28, 2019

IT IS NOT TO BE USED FOR CONSTRUCTION PURPOSES.

© 2018

Texas Department of Transportation

TEDSI INFRASTRUCTURE GROUP
Consulting Engineers
1201 E. Expressway 83
Mission, Texas 78572
(956) 424-7898
TBPE F-1640

JACOBS
JACOBS ENGINEERING GROUP INC. FIRM #2966

LOOP 1604
PM PEAK TRAFFIC PROJECTIONS
BUILD CONDITION

SHEET 30 OF 34

DESIGN CK	FED.RD. DIV.NO.			HIGHWAY NO.
CHECK PK				LOOP 1604
	STATE	DISTRICT	COUNTY	SHEET NO.
GRAPHICS CC	TX	SAN ANTONIO	BEXAR	30
CHECK PK	CONTROL	SECTION	JOB	
	2452	01	068	

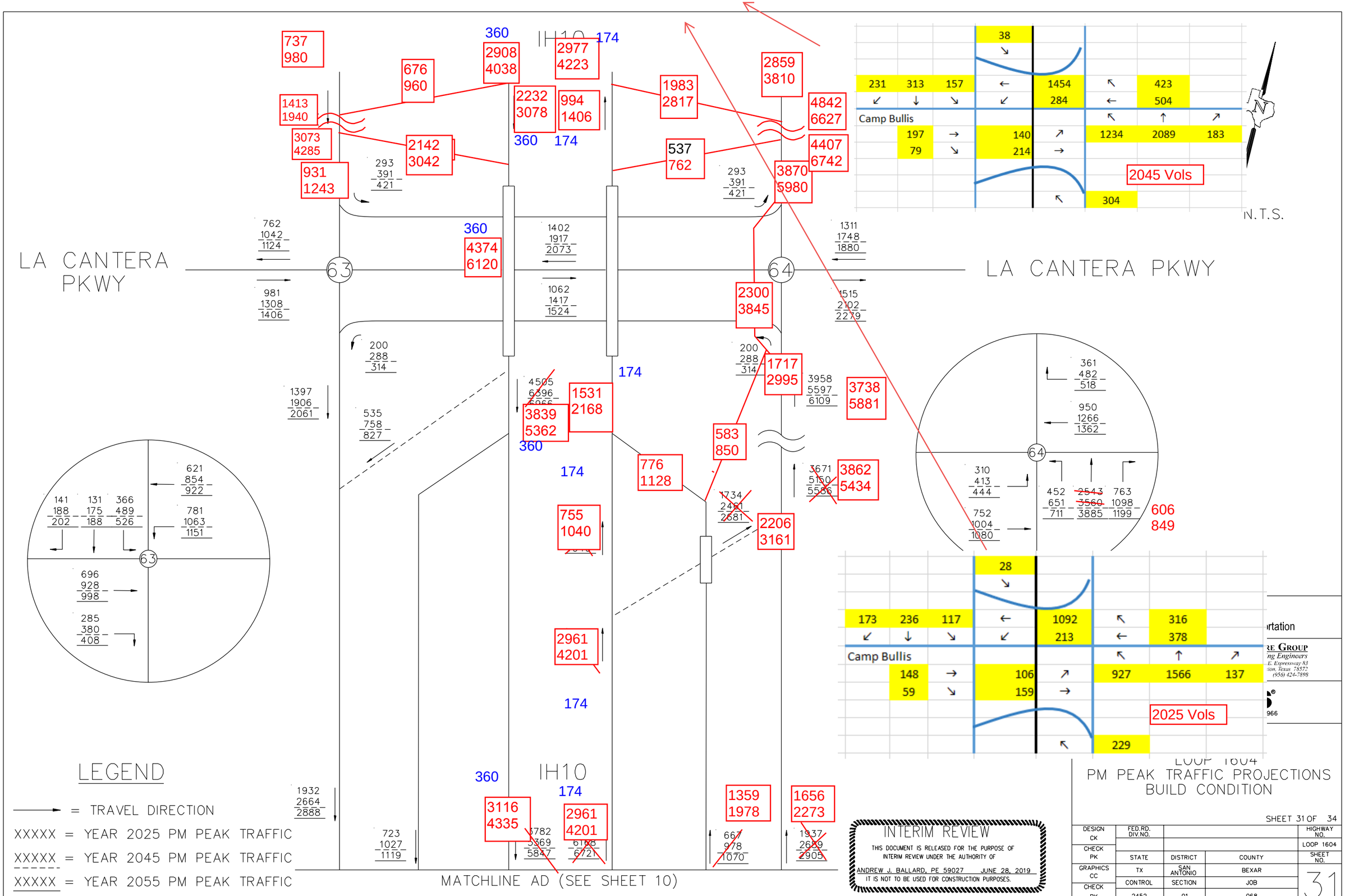
LA CANTERA PKWY
LA CANTERA PKWY
IH10
63
64
737 980
676 960
360 2908 4038
2977 4223 174
1413 1940
3073 4285
2142 3042
2232 3078
994 1406
360 174
931 1243
293 391 421
1983 2817
2859 3810
4842 6627
537 762
4407 6742
3870 5980
293 391 421
762 1042 1124
981 1308 1406
360 4374 6120
1402 1917 2073
1062 1417 1524
1311 1748 1880
1515 2102 2279
2300 3845
200 288 314
200 288 314
1717 2995
3958 5597 6109
3738 5881
174
1397 1906 2061
535 758 827
4505 6396 6966
1531 2168
3839 5362
360
583 850
776 1128
174
3671 5150 5586
3862 5434
1734 2461 2681
2206 3161
755 1040
2961 4201
174
621 854 922
141 188 202
131 175 188
366 489 526
781 1063 1151
696 928 998
285 380 408
361 482 518
950 1266 1362
310 413 444
752 1004 1080
452 651 711
2543 3560 3885
763 1098 1199
606 849
38
231 313 157
1454 284
423 504
Camp Bullis
197 79
140 214
1234 2089 183
2045 Vols
304
N.T.S.
28
173 236 117
1092 213
316 378
Camp Bullis
148 59
106 159
927 1566 137
2025 Vols
229
360
IH10
174
1932 2664 2888
3116 4335
2961 4201
1359 1978
1656 2273
723 1027 1119
3782 5369 5847
6168 6721
667 978 1070
1937 2629 2905
MATCHLINE AD (SEE SHEET 10)
LEGEND
= TRAVEL DIRECTION
XXXXX = YEAR 2025 PM PEAK TRAFFIC
XXXXX = YEAR 2045 PM PEAK TRAFFIC
XXXXX = YEAR 2055 PM PEAK TRAFFIC
INTERIM REVIEW
THIS DOCUMENT IS RELEASED FOR THE PURPOSE OF INTERIM REVIEW UNDER THE AUTHORITY OF
ANDREW J. BALLARD, PE 59027 JUNE 28, 2019
IT IS NOT TO BE USED FOR CONSTRUCTION PURPOSES.
LOOP 1604
PM PEAK TRAFFIC PROJECTIONS
BUILD CONDITION
SHEET 31 OF 34
DESIGN CK
CHECK PK
GRAPHICS CC
CHECK PK
FED.RD. DIV.NO.
STATE
TX
CONTROL
2452
DISTRICT
SAN ANTONIO
SECTION
01
COUNTY
BEXAR
JOB
068
HIGHWAY NO.
LOOP 1604
SHEET NO.
31

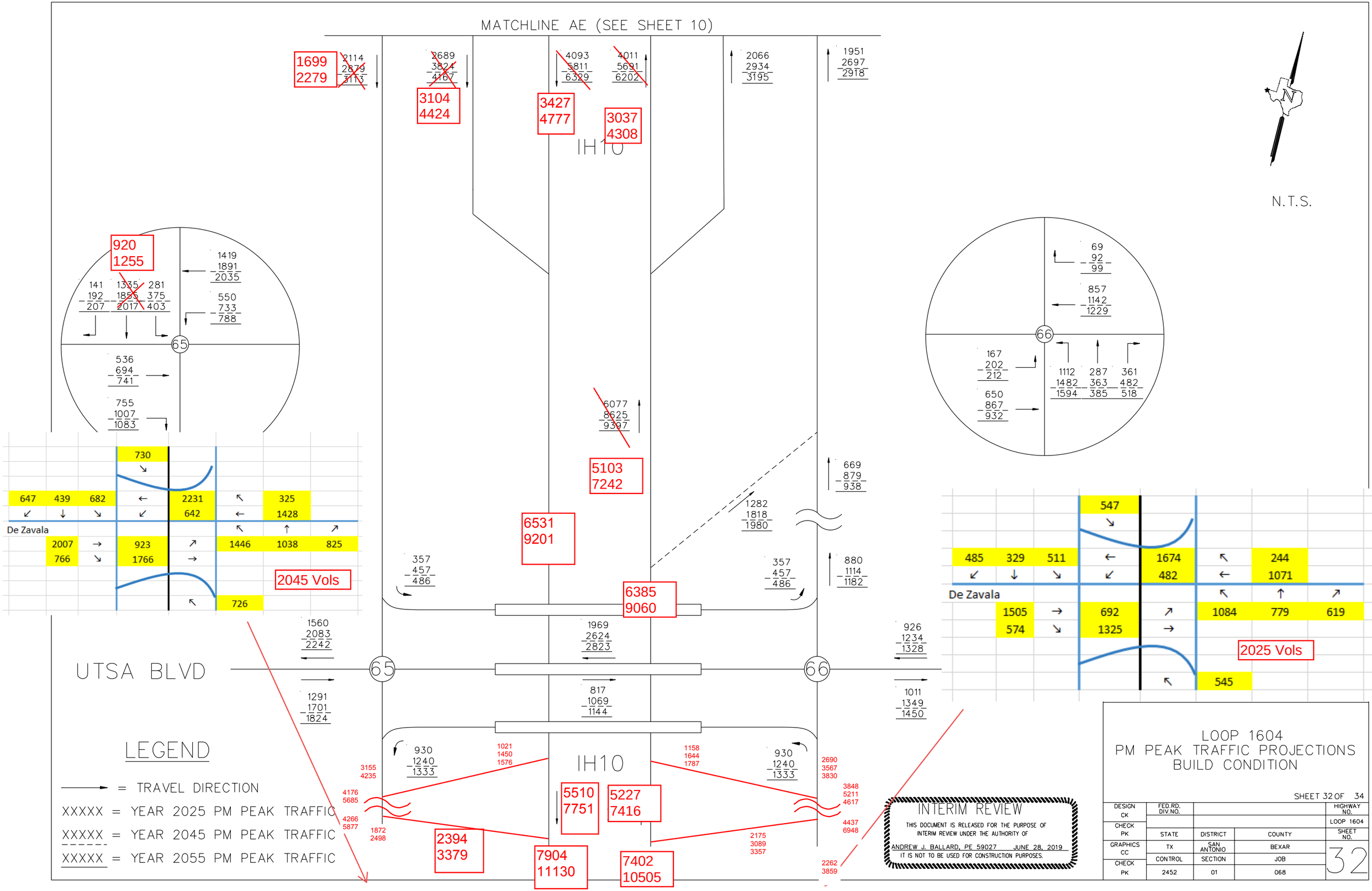
MATCHLINE AE (SEE SHEET 10)
N.T.S.
1699
2279
2114
2879
3113
2689
3824
4167
3104
4424
4093
5811
6329
4011
5691
6202
3427
4777
3037
4308
IH10
2066
2934
3195
1951
2697
2918
920
1255
1419
1891
2035
141
192
207
1335
1885
2017
281
375
403
550
733
788
65
536
694
741
755
1007
1083
730
647
439
682
2231
642
325
1428
De Zavala
2007
766
923
1766
1446
1038
825
2045 Vols
726
6077
8625
9397
5103
7242
6531
9201
669
879
938
1282
1818
1980
357
457
486
6385
9060
880
1114
1182
1560
2083
2242
1969
2624
2823
926
1234
1328
UTSA BLVD
1291
1701
1824
817
1069
1144
1011
1349
1450
930
1240
1333
1021
1450
1576
1158
1644
1787
3155
4235
4176
5685
4266
5877
1872
2498
5510
7751
5227
7416
2690
3567
3830
3848
5211
4617
4437
6948
2394
3379
7904
11130
7402
10505
2175
3089
3357
2262
3859
69
92
99
857
1142
1229
66
167
202
212
650
867
932
1112
1482
1594
287
363
385
361
482
518
547
485
329
511
1674
482
244
1071
De Zavala
1505
574
692
1325
1084
779
619
2025 Vols
545
LEGEND
= TRAVEL DIRECTION
XXXXX = YEAR 2025 PM PEAK TRAFFIC
XXXXX = YEAR 2045 PM PEAK TRAFFIC
XXXXX = YEAR 2055 PM PEAK TRAFFIC
INTERIM REVIEW
THIS DOCUMENT IS RELEASED FOR THE PURPOSE OF INTERIM REVIEW UNDER THE AUTHORITY OF
ANDREW J. BALLARD, PE 59027 JUNE 28, 2019
IT IS NOT TO BE USED FOR CONSTRUCTION PURPOSES.
LOOP 1604
PM PEAK TRAFFIC PROJECTIONS
BUILD CONDITION
SHEET 32 OF 34
DESIGN CK
CHECK PK
GRAPHICS CC
CHECK PK
FED.RD. DIV.NO.
STATE
DISTRICT
COUNTY
HIGHWAY NO.
LOOP 1604
SHEET NO.
TX
SAN ANTONIO
BEXAR
CONTROL
SECTION
JOB
2452
01
068
32

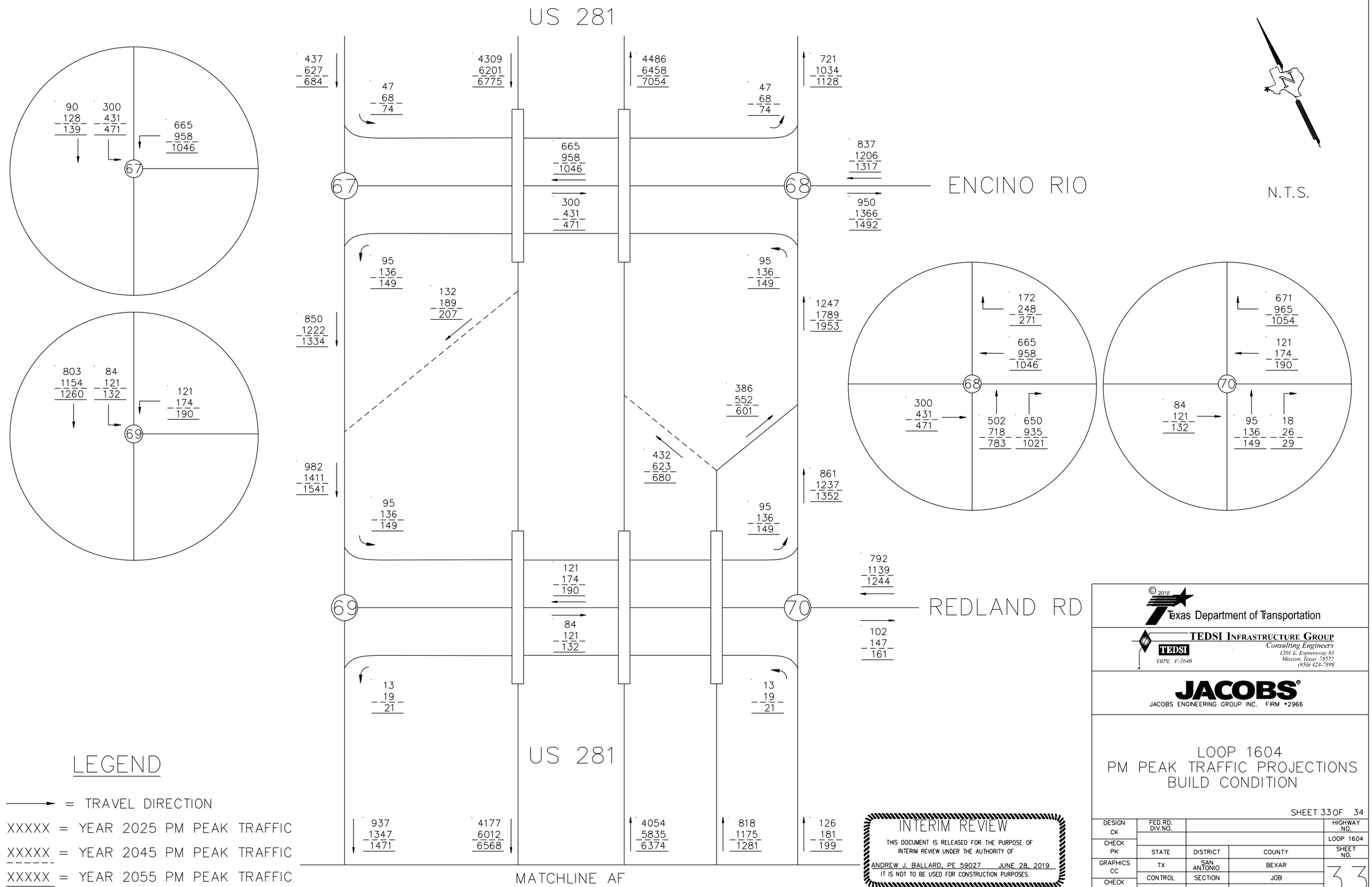
US 281
ENCINO RIO
REDLAND RD
N.T.S.
67
68
69
70
437 627 684
4309 6201 6775
4486 6458 7054
721 1034 1128
47 68 74
665 958 1046
300 431 471
837 1206 1317
950 1366 1492
95 136 149
132 189 207
850 1222 1334
1247 1789 1953
386 552 601
432 623 680
982 1411 1541
861 1237 1352
121 174 190
84 121 132
792 1139 1244
102 147 161
13 19 21
937 1347 1471
4177 6012 6568
4054 5835 6374
818 1175 1281
126 181 199
MATCHLINE AF
90 128 139
803 1154 1260
172 248 271
502 718 783
650 935 1021
671 965 1054
95 136 149
18 26 29
LEGEND
= TRAVEL DIRECTION
XXXXX = YEAR 2025 PM PEAK TRAFFIC
XXXXX = YEAR 2045 PM PEAK TRAFFIC
XXXXX = YEAR 2055 PM PEAK TRAFFIC
INTERIM REVIEW
THIS DOCUMENT IS RELEASED FOR THE PURPOSE OF INTERIM REVIEW UNDER THE AUTHORITY OF
ANDREW J. BALLARD, PE 59027 JUNE 28, 2019
IT IS NOT TO BE USED FOR CONSTRUCTION PURPOSES.
© 2018
Texas Department of Transportation
TEDSI INFRASTRUCTURE GROUP
Consulting Engineers
1201 E. Expressway 83
Mission, Texas 78572
(956) 424-7898
TBPE F-1640
JACOBS
JACOBS ENGINEERING GROUP INC. FIRM #2966
LOOP 1604
PM PEAK TRAFFIC PROJECTIONS
BUILD CONDITION
SHEET 33 OF 34
DESIGN CK
CHECK PK
GRAPHICS CC
CHECK PK
FED.RD. DIV.NO.
STATE
DISTRICT
COUNTY
TX
SAN ANTONIO
BEXAR
CONTROL
SECTION
JOB
2452
01
068
HIGHWAY NO.
LOOP 1604
SHEET NO.
33

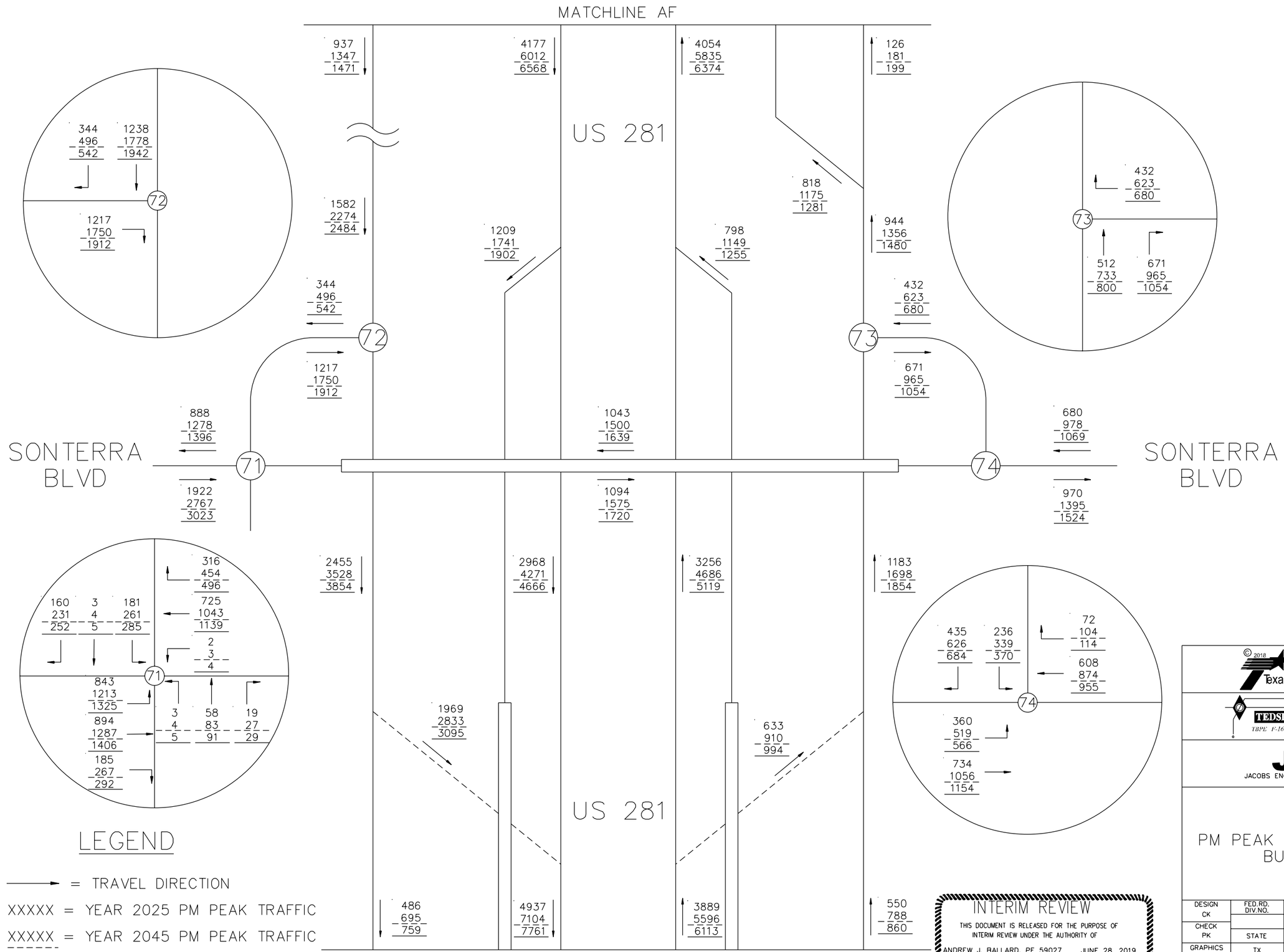

LEGEND

→ = TRAVEL DIRECTION

XXXXX = YEAR 2025 PM PEAK TRAFFIC

XXXXX = YEAR 2045 PM PEAK TRAFFIC

XXXXX = YEAR 2055 PM PEAK TRAFFIC

INTERIM REVIEW

THIS DOCUMENT IS RELEASED FOR THE PURPOSE OF INTERIM REVIEW UNDER THE AUTHORITY OF

ANDREW J. BALLARD, PE 59027 JUNE 28, 2019

IT IS NOT TO BE USED FOR CONSTRUCTION PURPOSES.

© 2018

Texas Department of Transportation

TEDSI INFRASTRUCTURE GROUP
Consulting Engineers
1201 E. Expressway 83
Mission, Texas 78572
(956) 424-7898
TBPE F-1640

JACOBS
JACOBS ENGINEERING GROUP INC. FIRM #2966

LOOP 1604
PM PEAK TRAFFIC PROJECTIONS
BUILD CONDITION

SHEET 34 OF 34

DESIGN CK	FED.RD. DIV.NO.			HIGHWAY NO.
CHECK PK				LOOP 1604
	STATE	DISTRICT	COUNTY	SHEET NO.
GRAPHICS CC	TX	SAN ANTONIO	BEXAR	34
	CONTROL	SECTION	JOB	
CHECK PK	2452	01	068	

APPENDIX C

Traffic Calculations

Loop 1604 Design Condition 2045 AM TNM Roadway Segment	Speed mph	AM Peak	# Lanes	DHV per lane	LD % mix	# of Auto each lane
Loop 1604 Mainlanes						
1604 ebml w of Braun OR	60	3715	2	1,857.5	0.98	1,820
1604 ebml w of Braun OR 4 ln	60	3715	4	928.8	0.98	910
1604 ebml Braun OR to HOV start	60	5377	5	1,075.4	0.98	1,054
1604 ebml HOV start to Haus OFR	60	4883	5	976.6	0.98	957
1604 ebml Haus OFR to Band OR	60	4232	4	1,058.0	0.98	1,037
1604 ebml Band OR to Haus OR	60	5974	5	1,194.8	0.98	1,171
1604 ebml Haus OR to Bab OFR	60	6837	6	1,139.5	0.98	1,117
1604 ebml n of Haus OR 5ln	60	6168	5	1,233.6	0.98	1,209
1604 ebml s of KSP OR	60	6168	4	1,542.0	0.98	1,511
1604 ebml KSP OR to Bren OFR	60	7457	5	1,491.4	0.98	1,462
1604 ebml Bren OFR to 10DC OFR	60	6851	5	1,370.2	0.98	1,343
1604 ebml 10DC OFR to FR OFR	60	3289	3	1,096.3	0.98	1,074
1604 ebml 10FR OFR to 1604 Feed	60	2934	3	978.0	0.98	958
1604 ebml at IH10	60	1585	3	528.3	0.98	518
1604 ebml E of I10 4 ln	60	2946	4	736.5	0.97	714
1604 ebml E of I10 3 ln	60	2946	3	982.0	0.97	953
1604 ebml 10FR OR to 10DC OR	60	4745	3	1,581.7	0.97	1,534
1604 ebml 10DC OR to Mil OFR	60	7782	5	1,556.4	0.97	1,510
1604 ebml Mil OFR to Bitters OFR	60	6710	4	1,677.5	0.97	1,627
1604 ebml Bitters OFR to Mil OR	60	5098	4	1,274.5	0.97	1,236
1604 ebml Mil OR to Bitters OR	60	6334	4	1,583.5	0.97	1,536
1604 ebml Bitters OR to Blanco OFR	60	7276	5	1,455.2	0.97	1,412
1604 ebml Blanco OFR to Hueb OR	60	4676	4	1,169.0	0.97	1,134
1604 ebml Hueb OR to Blanco OR	60	5881	4	1,470.3	0.97	1,426
1604 ebml Blanco OR to 281FR OFR	60	7885	5	1,577.0	0.97	1,530
1604 ebml 281FROFR to 281DCOF	60	6403	4	1,600.8	0.97	1,553
1604 ebml 281DC OFR to Voight OR	60	3337	3	1,112.3	0.97	1,079
1604 ebml at US281	60	4145	3	1,381.7	0.97	1,340
1604 ebml FR OR to 281DC OR	60	4499	4	1,124.8	0.967	1,088
1604 ebml 281DC OR to Red OFR	60	6598	5	1,319.6	0.967	1,276
1604 ebml Red OFR to Bulv OFR	60	5710	5	1,142.0	0.967	1,104
1604 ebml Bulv OFR to Red OR	60	4225	4	1,056.3	0.958	1,012
1604 ebml Red OR to OC OFR	60	4610	5	922.0	0.958	883
1604 ebml OC OFR to Bulv OR	60	4101	4	1,025.3	0.958	982
1604 ebml Bulv OR to Jud OFR	60	5848	5	1,169.6	0.958	1,120
1604 ebml Jud OFR to OC OR	60	5067	4	1,266.8	0.958	1,214
1604 ebml OC OR to GMT OFR	60	5558	5	1,111.6	0.958	1,065
1604 ebml GMT OFR to Jud OR	60	5170	4	1,292.5	0.958	1,238
1604 ebml Jud OR to Nac OFR	60	5757	5	1,151.4	0.958	1,103
1604 ebml Nac OFR to LO OFR	60	5003	4	1,250.8	0.958	1,198
1604 ebml LO OFR to Nac OR	60	4432	4	1,108.0	0.976	1,081
1604 ebml Nac OR to FR OFR	60	5342	4	1,335.5	0.976	1,303

Loop 1604 Design Condition 2045 AM

TNM Roadway Segment	Speed mph	AM Peak	# Lanes	DHV per lane	LD % mix	# of Auto each lane
1604 ebml FR OFR to LO OR	60	5006	3	1,668.7	0.976	1,629
1604 ebml LO OR to I35DC OFR	60	6770	4	1,692.5	0.976	1,652
1604 ebml at I35	60	3952	2	1,976.0	0.955	1,887
1604 wbml at I35	60	3208	2	1,604.0	0.955	1,532
1604 wbml I35DC OR to LO OFR 3ln	60	5771	3	1,923.7	0.976	1,877
1604 wbml I35DC OR to LO OFR 4ln	60	5771	4	1,442.8	0.976	1,408
1604 wbml LO OFR to HOV OR	60	5096	4	1,274.0	0.976	1,243
1604 wbml HOV OR to Nac OFR	60	6453	4	1,613.3	0.976	1,575
1604 wbml Nac OFR to FR OR	60	4639	4	1,159.8	0.958	1,111
1604 wbml FR OR to Nac OR	60	5708	4	1,427.0	0.958	1,367
1604 wbml Nac OR to GMT OFR	60	6330	5	1,266.0	0.958	1,213
1604 wbml GMT OFR to Jud OFR	60	5415	4	1,353.8	0.958	1,297
1604 wbml Jud OFR to GMT OR	60	4308	4	1,077.0	0.958	1,032
1604 wbml GMT OR to OC OFR	60	4488	5	897.6	0.958	860
1604 wbml OC OFR to Jud OR	60	4013	4	1,003.3	0.958	961
1604 wbml Jud OR to Bulv OFR	60	4828	5	965.6	0.958	925
1604 wbml Bulv OFR to OC OR	60	3909	4	977.3	0.958	936
1604 wbml OC OR to Redl OFR	60	5395	5	1,079.0	0.958	1,034
1604 wbml Redl OFR to Bulv OR	60	4914	4	1,228.5	0.958	1,177
1604 wbml Bulv OR to Redl OR 5ln	60	7407	5	1,481.4	0.967	1,433
1604 wbml Bulv OR to Redl OR 4ln	60	7407	4	1,851.8	0.967	1,791
1604 wbml Redl OR to 281DC OFR 5ln	60	9375	5	1,875.0	0.967	1,813
1604 wbml RedOR to 281DC OFR 4	60	9375	4	2,343.8	0.967	2,266
1604 wbml 281D OF to 281F OFR	60	6418	3	2,139.3	0.967	2,069
1604 wbml at US281	60	5761	3	1,920.3	0.97	1,863
1604 wbml SOP OFR to 281DC OR	60	4294	3	1,431.3	0.97	1,388
1604 wbml w of 281DC OR 5 ln	60	6345	5	1,269.0	0.97	1,231
1604 wbml w of 281DC OR 4 ln	60	6345	4	1,586.3	0.97	1,539
1604 wbml 281FROR to BlanOFR	60	7290	5	1,458.0	0.97	1,414
1604 wbml Blanco OFR to BP OR	60	5346	4	1,336.5	0.97	1,296
1604 wbml BP OR to Blanco OR	60	6051	4	1,512.8	0.97	1,467
1604 wbml Blanco OR to Rog OFR	60	7514	5	1,502.8	0.97	1,458
1604 wbml Rog OFR to Mil OFR	60	7064	4	1,766.0	0.97	1,713
1604 wbml Mil OFR to Rog OR	60	5565	4	1,391.3	0.97	1,350
1604 wbml Rog OR to LS OFR	60	6543	5	1,308.6	0.97	1,269
1604 wbml LS OFR to Mil OR	60	4966	4	1,241.5	0.97	1,204
1604 wbml Mil OR to 10DC OFR	60	7466	5	1,493.2	0.97	1,448
1604 wbml 10DC OFR to LS OR	60	3059	3	1,019.7	0.97	989
1604 wbml LS OR to Feeder OFR	60	3620	4	905.0	0.97	878
1604 wbml at IH10	60	1015	3	338.3	0.98	332
1604 wbml Feeder to FR OR	60	1015	3	338.3	0.98	332
1604 wbml 10DC OR to KSP OFR	60	3735	5	747.0	0.98	732
1604 wbml KS OFR to Bab OR	60	3301	4	825.3	0.98	809

Loop 1604 Design Condition 2045 AM

TNM Roadway Segment	Speed mph	AM Peak	# Lanes	DHV per lane	LD % mix	# of Auto each lane
1604 wbml Bab OR to Haus OFR	60	3456	5	691.2	0.98	677
1604 wbml Haus OFR to Band OFR	60	3247	5	649.4	0.98	636
1604 wbml w of Band OFR 4 ln	60	1816	4	454.0	0.98	445
1604 wbml w of Band OFR 3 ln	60	1816	3	605.3	0.98	593
1604 wbml HOV end to Haus OR	60	2890	3	963.3	0.98	944
1604 wbml Haus OR to Braun OFR	60	4140	4	1,035.0	0.98	1,014
1604 wbml w of Braun OFR 3 ln	60	3497	3	1,165.7	0.98	1,142
1604 wbml w of Braun OFR 2 ln	60	3497	2	1,748.5	0.98	1,714
1604 eb HOV Nac OFR to LO OFR	60	587	1	587.0	0.958	562
1604 wb HOV HOV OR to Nac OFR	60	379	1	379.0	0.976	370
1604 wb HOV Nac OFR to FR OR	60	379	1	379.0	0.976	370
1604 wb HOV FR OR to Nac OR	60	379	1	379.0	0.958	363
1604 wb HOV Nac OR to GMT OFR	60	379	1	379.0	0.958	363
1604 wb HOV GMT OFR to Jud OFR	60	379	1	379.0	0.958	363
1604 wb HOV Jud OFR to GMT OR	60	379	1	379.0	0.958	363
1604 wb HOV GMT OR to OC OFR	60	433	1	433.0	0.958	415
1604 wb HOV OC OFR to Jud OR	60	433	1	433.0	0.958	415
1604 wb HOV Jud OR to Bulv OFR	60	433	1	433.0	0.958	415
1604 wb HOV Bulv OFR to OC OR	60	433	1	433.0	0.958	415
1604 wb HOV OC OR to Redl OFR	60	433	1	433.0	0.958	415
1604 wb HOV Redl OFR to Bulv OR	60	433	1	433.0	0.958	415
1604 wb HOV Bulv OR to Redl OR 5ln	60	285	1	285.0	0.967	276
1604 wb HOV Bulv OR to Redl OR 4ln	60	285	1	285.0	0.967	276
1604 wb HOV Red OR 281DC OFR 5ln	60	285	1	285.0	0.967	276
1604 wb HOV RedOR to 281DC OFR 4	60	285	1	285.0	0.967	276
1604 wb HOV 281D OF to 281F OFR	60	285	1	285.0	0.967	276
1604 wb HOV at US281	60	285	1	285.0	0.97	276
1604 wb HOV SOP OFR to 281DC OR	60	285	1	285.0	0.97	276
1604 wb HOV w of 281DC OR 5 ln	60	285	1	285.0	0.97	276
1604 wb HOV w of 281DC OR 4 ln	60	285	1	285.0	0.97	276
1604 wb HOV 281FROR to BlancoOFR	60	285	1	285.0	0.97	276
1604 wb HOV Blanco OFR to BP OR	60	285	1	285.0	0.97	276
1604 wb HOV BP OR to Blanco OR	60	651	1	651.0	0.97	631
1604 wb HOV Blanco OR to Rog OFR	60	651	1	651.0	0.97	631
1604 wb HOV Rog OFR to Mil OFR	60	651	1	651.0	0.97	631
1604 wb HOV Mil OFR to Rog OR	60	651	1	651.0	0.97	631
1604 wb HOV Rog OR to LS OFR	60	651	1	651.0	0.97	631
1604 wb HOV LS OFR to Mil OR	60	545	1	545.0	0.97	529
1604 wb HOV Mil OR to 10DC OFR	60	545	1	545.0	0.97	529
1604 wb HOV 10DC OFR to LS OR	60	545	1	545.0	0.97	529
1604 wb HOV LS OR to Feeder OFR	60	545	1	545.0	0.97	529
1604 wb HOV at IH10	60	545	1	545.0	0.98	534
1604 wb HOV Feeder to FR OR	60	545	1	545.0	0.98	534

Loop 1604 Design Condition 2045 AM

TNM Roadway Segment	Speed mph	AM Peak	# Lanes	DHV per lane	LD % mix	# of Auto each lane
1604 wb HOV 10DC OR to KSP OFR	60	545	1	545.0	0.98	534
1604 wb HOV KS OFR to Bab OR	60	545	1	545.0	0.98	534
1604 wb HOV Bab OR to Haus OFR	60	1074	1	1,074.0	0.98	1,053
1604 wb HOV Haus OFR to Band OFR	60	1074	1	1,074.0	0.98	1,053
1604 wb HOV w of Band OFR 4 ln	60	1074	1	1,074.0	0.98	1,053
1604 wb HOV w of Band OFR 3 ln	60	1074	1	1,074.0	0.98	1,053
1604 eb HOV at US281	60	373	1	373.0	0.97	362
1604 eb HOV FR OR to 281DC OR	60	373	1	373.0	0.967	361
1604 eb HOV 281DC OR to Red OFR	60	373	1	373.0	0.967	361
1604 eb HOV Red OFR to Bulv OFR	60	373	1	373.0	0.967	361
1604 eb HOV Bulv OFR to Red OR	60	373	1	373.0	0.958	357
1604 eb HOV Red OR to OC OFR	60	605	1	605.0	0.958	580
1604 eb HOV OC OFR to Bulv OR	60	605	1	605.0	0.958	580
1604 eb HOV Bulv OR to Jud OFR	60	605	1	605.0	0.958	580
1604 eb HOV Jud OFR to OC OR	60	605	1	605.0	0.958	580
1604 eb HOV OC OR to GMT OFR	60	605	1	605.0	0.958	580
1604 eb HOV GMT OFR to Jud OR	60	605	1	605.0	0.958	580
1604 eb HOV Jud OR to Nac OFR	60	587	1	587.0	0.958	562
1604 eb HOV Blanco OFR to Hueb OR	60	764	1	764.0	0.97	741
1604 eb HOV Hueb OR to Blanco OR	60	373	1	373.0	0.97	362
1604 eb HOV Blanco OR to 281FR OFR	60	373	1	373.0	0.97	362
1604 eb HOV 281FROFR to 281DCOF	60	373	1	373.0	0.97	362
1604 eb HOV 281DC OFR to Voight OR	60	373	1	373.0	0.97	362
1604 eb HOV at IH10	60	507	1	507.0	0.98	497
1604 eb HOV E of I10 4 ln	60	507	1	507.0	0.97	492
1604 eb HOV E of I10 3 ln	60	507	1	507.0	0.97	492
1604 eb HOV 10FR OR to 10DC OR	60	507	1	507.0	0.97	492
1604 eb HOV 10DC OR to Mil OFR	60	507	1	507.0	0.97	492
1604 eb HOV Mil OFR to Bitters OFR	60	507	1	507.0	0.97	492
1604 eb HOV Bitters OFR to Mil OR	60	764	1	764.0	0.97	741
1604 eb HOV Mil OR to Bitters OR	60	764	1	764.0	0.97	741
1604 eb HOV Bit OR to Blanco OFR	60	764	1	764.0	0.97	741
1604 eb HOV HOV start to Haus OFR	60	494	1	494.0	0.98	484
1604 eb HOV Haus OFR to Band OR	60	494	1	494.0	0.98	484
1604 eb HOV Band OR to Haus OR	60	494	1	494.0	0.98	484
1604 eb HOV Haus OR to Bab OFR	60	494	1	494.0	0.98	484
1604 eb HOV n of Haus OR 5ln	60	494	1	494.0	0.98	484
1604 eb HOV s of KSP OR	60	494	1	494.0	0.98	484
1604 eb HOV KSP OR to Bren OFR	60	507	1	507.0	0.98	497
1604 eb HOV Bren OFR to 10DC OFR	60	507	1	507.0	0.98	497
1604 eb HOV 10DC OFR to FR OFR	60	507	1	507.0	0.98	497
1604 eb HOV 10FR OFR to 1604 Feed	60	507	1	507.0	0.98	497

Loop 1604 Design Condition 2045 AM

TNM Roadway Segment	Speed mph	AM Peak	# Lanes	DHV per lane	LD % mix	# of Auto each lane
IH 10 / Frontage Roads						
I10 nb HOV	65	323	1	323.0	0.97	313
I10 sb HOV	65	625	1	625.0	0.97	606
I10 nbml s of de Zavala OR	65	7825	4	1,956.3	0.979	1,915
I10 nbml s of OFR to 1604 FR	65	9150	5	1,830.0	0.979	1,792
I10 nbml 1604 OFR to I10 DC OR	65	7192	4	1,798.0	0.979	1,760
I10 nbml I10 DC OR to FR OFR	65	3936	3	1,312.0	0.979	1,284
I10 nbml btw FR ramps at 1604	65	3916	3	1,305.3	0.979	1,278
I10 nbml FR OR to LC OFR	70	3593	3	1,197.7	0.97	1,162
I10 nbml LC OFR to I10DC OR	70	2581	3	860.3	0.97	835
I10 nbml I10DC OR to CB OFR	70	4321	5	864.2	0.97	838
I10 nbml n of CB OFR 4 ln	70	2948	4	737.0	0.97	715
I10 nbml CB OFR to LC OR 3 ln	70	2948	3	982.7	0.97	953
I10 sbml FR OFR to DC OFR	65	8571	4	2,142.8	0.97	2,078
I10 sbml DC OFR to FR OFR	65	6370	3	2,123.3	0.97	2,060
I10 sbml FR OFR to HOV end	65	5620	3	1,873.3	0.97	1,817
I10 sbml HOV end to FR OR	65	6245	3	2,081.7	0.979	2,038
I10 sbml FR OR to DC OR	65	6963	3	2,321.0	0.979	2,272
I10 sbml s of DC OR	65	12842	5	2,568.4	0.979	2,514
I10 sbml s of de Zav OFR	65	11809	5	2,361.8	0.979	2,312
I10 nbfr s of UTSA	50	2783	3	927.7	0.974	904
I10 nbfr n of UTSA 3 ln	50	1042	3	347.3	0.974	338
I10 nbfr n of UTSA 2 ln	50	1042	2	521.0	0.974	507
I10 nbfr n of OFR to 1604FR	50	3000	3	1,000.0	0.974	974
I10 nbfr 1604 wbfr to LC OFR	50	1223	2	611.5	0.974	596
I10 nbfr LC OFR to LC bp	50	2235	4	558.8	0.974	544
I10 nbfr LC bp to LC	50	1094	3	364.7	0.974	355
I10 sbfr s of LC 3ln	50	947	3	315.7	0.974	307
I10 sbfr s of LC 2ln	50	947	2	473.5	0.974	461
I10 sbfr OFR to 1604 wbfr	50	1491	3	497.0	0.974	484
I10 sbfr n of UTSA 3ln	50	1956	3	652.0	0.974	635
I10 sbfr n of UTSA 2ln	50	1956	2	978.0	0.974	953
I10 sbfr n of UTSA 4ln	50	1956	4	489.0	0.974	476
I10 sbfr s of UTSA	50	3577	2	1,788.5	0.974	1,742
I10 sbml n of CB OR	70	4627	3	1,542.3	0.97	1,496
I10 sbml CB OR to FR OFR	70	9115	4	2,278.8	0.97	2,210
I10 nbfr LC bp to CB OFR 3 ln	50	1881	3	627.0	0.974	611
I10 nbfr LC bp to CB OFR 4 ln	50	1881	4	470.3	0.974	458
I10 nbfr LC to CB OFR	50	690	2	345.0	0.974	336
I10 nbfr CB OFR to LC OR	50	3254	3	1,084.7	0.974	1,056
I10 nbfr n of LC OR	50	779	3	259.7	0.974	253
I10 sbfr n of SumOaks OR	50	5661	3	1,887.0	0.974	1,838
I10 sbfr SumOaks OR to LC	50	1173	3	391.0	0.974	381

Loop 1604 Design Condition 2045 AM TNM Roadway Segment	Speed mph	AM Peak	# Lanes	DHV per lane	LD % mix	# of Auto each lane
LP 1604 Frontage Road						
1604 ebfr w of Bandera	40	2821	3	940.3	0.992	933
1604 ebfr e of Bandera 2 ln	40	4150	2	2,075.0	0.992	2,058
1604 ebfr e of Bandera to Hau OFR	40	4150	3	1,383.3	0.992	1,372
1604 ebfr Haus OFR to Band OR	40	4801	4	1,200.3	0.992	1,191
1604 ebfr Band OR to Haus	40	3059	3	1,019.7	0.992	1,012
1604 ebfr Haus to Haus OR	40	2819	3	939.7	0.992	932
1604 ebfr Haus OR to KSP	40	1956	2	978.0	0.992	970
1604 ebfr KSP to Bab OFR	40	3281	2	1,640.5	0.992	1,627
1604 ebfr Bab OFR to KSP OR	40	3950	3	1,316.7	0.992	1,306
1604 ebfr KSP OR to Babcock	40	2648	3	882.7	0.992	876
1604 ebfr Bab to Bren OFR	40	2654	3	884.7	0.992	878
1604 ebfr OFR to Brenan	40	3260	4	815.0	0.992	808
1604 ebfr Brenan to JP	40	3168	4	792.0	0.992	786
1604 ebfr JP to OFR	40	3567	3	1,189.0	0.992	1,179
1604 ebfr OFR to Feeder OR	40	3922	4	980.5	0.992	973
1604 ebfr Feeder OR to 10 ETA	40	1206	3	402.0	0.992	399
1604 ebfr 10FR ETA to VJ	40	3444	2	1,722.0	0.974	1,677
1604 ebfr VJ to Trade	40	4104	2	2,052.0	0.974	1,999
1604 ebfr Trade to LS	40	2167	2	1,083.5	0.974	1,055
1604 ebfr LS to Mil OFR	40	1235	2	617.5	0.974	601
1604 ebfr OFR to Mil	40	2024	3	674.7	0.974	657
1604 ebfr Mil to Bitters OFR	40	2322	2	1,161.0	0.974	1,131
1604 ebfr OFR to Mil OR	40	3677	3	1,225.7	0.974	1,194
1604 ebfr Mil OR to Bitters	40	1798	3	599.3	0.974	584
1604 ebfr Bitters to OR	40	1843	3	614.3	0.974	598
1604 ebfr OR to Hueb	40	796	2	398.0	0.974	388
1604 ebfr Hueb to Blanco OFR	40	1101	2	550.5	0.974	536
1604 ebfr OFR to Blanco BP	40	1998	3	666.0	0.974	649
1604 ebfr Blanco BP to Blanco	40	866	3	288.7	0.974	281
1604 ebfr Blanco to OFR	40	2405	2	1,202.5	0.974	1,171
1604 ebfr OFR to Blanco OR	40	4426	2	2,213.0	0.974	2,155
1604 ebfr OR to Voight	40	2120	2	1,060.0	0.974	1,032
1604 ebfr Voight to 281FR OFR	40	2111	2	1,055.5	0.974	1,028
1604 ebfr OFR to Voight OR	40	3593	3	1,197.7	0.974	1,167
1604 ebfr Voight OR to 281 sbfr	40	2785	3	928.3	0.974	904
1604 ebfr 281 nbfr to OR	40	1260	3	420.0	0.966	406
1604 ebfr OR to GC	40	921	3	307.0	0.966	297
1604 ebfr GC to Redl	40	448	2	224.0	0.966	216
1604 ebfr Redl to Bulv OFR	40	987	2	493.5	0.983	485
1604 ebfr Bulv OFR to Redl OR	40	2472	3	824.0	0.983	810
1604 ebfr OR to Bulv	40	1855	3	618.3	0.983	608

Loop 1604 Design Condition 2045 AM

TNM Roadway Segment	Speed mph	AM Peak	# Lanes	DHV per lane	LD % mix	# of Auto each lane
1604 ebfr Bulv to OC OFR	40	2152	2	1,076.0	0.983	1,058
1604 ebfr OC OFR to Bulv OR	40	2661	3	887.0	0.983	872
1604 ebfr Bulv OR to OC	40	914	3	304.7	0.983	299
1604 ebfr OC to Jud OFR	40	621	2	310.5	0.983	305
1604 ebfr Jud OFR to OC OR	40	1402	3	467.3	0.983	459
1604 ebfr OC OR to Jud	40	1039	3	346.3	0.983	340
1604 ebfr Jud to GMT OFR	40	693	2	346.5	0.983	341
1604 ebfr GMT OFR to Jud OR	40	1081	3	360.3	0.983	354
1604 ebfr Jud OR to GMT	40	512	3	170.7	0.983	168
1604 ebfr btw RR TAs	40	1799	2	899.5	0.983	884
1604 RR TA EB	40	105	1	105.0	0.983	103
1604 ebfr RR TA to Nac	40	1904	3	634.7	0.983	624
1604 ebfr Nac to OR	40	2821	2	1,410.5	0.988	1,394
1604 ebfr Nac OR to LO OFR	40	243	2	121.5	0.988	120
1604 ebfr LO OFR to WRRTA	40	747	2	373.5	0.988	369
1604 ebfr WRRTA to ERRTA	40	693	2	346.5	0.988	342
1604 ebfr LO OFR to LO	40	789	2	394.5	0.988	390
1604 RR TA1W EB	40	54	2	27.0	0.988	27
1604 RR TA1E EB	40	96	1	96.0	0.988	95
1604 ebfr LO OR to RBP OFR	40	715	2	357.5	0.988	353
1604 ebfr OFR to I35DC OR	40	934	2	467.0	0.988	461
1604 ebfr I35DC OR to RBP	40	638	2	319.0	0.988	315
1604 wbfr GW to I35DC OFR	40	531	2	265.5	0.988	262
1604 wbfr OFR to LO OFR	40	785	2	392.5	0.988	388
1604 wbfr OFR to LO	40	1460	3	486.7	0.988	481
1604 wbfr LO to WRRTA1	40	1537	2	768.5	0.988	759
1604 RR TA1E WB	40	89	2	44.5	0.988	44
1604 RR TA1W WB	40	54	2	27.0	0.988	27
1604 wbfr WRRTA2 to Nac OFR	40	641	3	213.7	0.988	211
1604 wbfr WRRTA1 to WRRTA2	40	1448	2	724.0	0.988	715
1604 wbfr Nac OFR to Nac	40	2247	4	561.8	0.988	555
1604 wbfr Nac to OR	40	871	2	435.5	0.983	428
1604 wbfr OR to E TA	40	249	2	124.5	0.983	122
1604 wbfr at TA	40	144	2	72.0	0.983	71
1604 RR TA WB	40	105	1	105.0	0.983	103
1604 wbfr GMT to Jud OFR	40	601	2	300.5	0.983	295
1604 wbfr Jud OFR to GMT OR	40	1708	3	569.3	0.983	560
1604 wbfr GMT OR to Jud	40	1474	3	491.3	0.983	483
1604 wbfr Jud to OC OFR	40	1845	2	922.5	0.983	907
1604 wbfr OC OFR to Jud OR	40	2320	3	773.3	0.983	760
1604 wbfr Jud OR to OC	40	1505	3	501.7	0.983	493
1604 wbfr OC to Bulv OFR	40	2327	2	1,163.5	0.983	1,144
1604 wbfr Bulv OFR to OC OR	40	3246	3	1,082.0	0.983	1,064

Loop 1604 Design Condition 2045 AM

TNM Roadway Segment	Speed mph	AM Peak	# Lanes	DHV per lane	LD % mix	# of Auto each lane
1604 wbfr OC OR to Bulv	40	1760	3	586.7	0.983	577
1604 wbfr Bulv to Redl OFR	40	3862	2	1,931.0	0.983	1,898
1604 wbfr Redl OFR to Bulv OR	40	4430	3	1,476.7	0.983	1,452
1604 wbfr Bulv OR to Redl	40	2085	3	695.0	0.983	683
1604 wbfr Redl to OR	40	2487	3	829.0	0.966	801
1604 wbfr OR to CBC	40	519	2	259.5	0.966	251
1604 wbfr CBC to 281 nbfr OFR	40	867	2	433.5	0.966	419
1604 wbfr OFR to 281 nbfr	40	1217	3	405.7	0.966	392
1604 wbfr 281 sbfr to 281FR OR	40	1674	2	837.0	0.974	815
1604 wbfr OR to SOP	40	2368	3	789.3	0.974	769
1604 wbfr SOP to OFR	40	1466	2	733.0	0.974	714
1604 wbfr OFR to SOP OR	40	2755	3	918.3	0.974	894
1604 wbfr OR to Blanco	40	1497	2	748.5	0.974	729
1604 wbfr Blanco to OFR	40	1677	2	838.5	0.974	817
1604 wbfr OFR to Blanco OR	40	2519	3	839.7	0.974	818
1604 wbfr Blanco OR to Hueb	40	1056	2	528.0	0.974	514
1604 wbfr Hueb to OFR	40	1335	2	667.5	0.974	650
1604 wbfr OFR to RogR	40	1785	3	595.0	0.974	580
1604 wbfr RogR to Mil OFR	40	2548	2	1,274.0	0.974	1,241
1604 wbfr Mil OFR to RogR OR	40	4229	3	1,409.7	0.974	1,373
1604 wbfr Rog OR to Mil	40	3251	3	1,083.7	0.974	1,055
1604 wbfr Mil to OR	40	3261	2	1,630.5	0.974	1,588
1604 wbfr Mil OR to LS OFR	40	761	2	380.5	0.974	371
1604 wbfr LS OFR to LS	40	2444	3	814.7	0.974	793
1604 wbfr LS to OR	40	2495	2	1,247.5	0.974	1,215
1604 wbfr OR to Trade	40	1934	2	967.0	0.974	942
1604 wbfr Trade to VJ	40	1934	2	967.0	0.974	942
1604 wbfr VJ to Feeder OR	40	1553	2	776.5	0.974	756
1604 wbfr Feeder to 10 ETA	40	1255	2	627.5	0.974	611
1604 wbfr 10 WTA to Feeder OFR	40	1019	2	509.5	0.992	505
1604 wbfr Feeder OFR to FR OR	40	3772	4	943.0	0.992	935
1604 wbfr FR OR to LC Bypass	40	3472	3	1,157.3	0.992	1,148
1604 wbfr LC Bypass to LC	40	2500	3	833.3	0.992	827
1604 wbfr LC to CH	40	514	3	171.3	0.992	170
1604 wbfr w of Brennan	40	316	2	158.0	0.992	157
1604 wbfr e of Babcock	40	1288	3	429.3	0.992	426
1604 wbfr Babcock to KSP OFR	40	1235	2	617.5	0.992	613
1604 wbfr KSP OFR to Bab OR	40	1669	3	556.3	0.992	552
1604 wbfr Bab OR to KSP	40	985	3	328.3	0.992	326
1604 wbfr KSP to Haus OFR	40	967	2	483.5	0.992	480
1604 wbfr Haus OFR to Haus	40	1176	3	392.0	0.992	389
1604 wbfr Haus to Bandera OFR	40	2071	2	1,035.5	0.992	1,027
1604 wbfr Bandera OFR to Haus OR	40	3502	4	875.5	0.992	868

Loop 1604 Design Condition 2045 AM

TNM Roadway Segment	Speed mph	AM Peak	# Lanes	DHV per lane	LD % mix	# of Auto each lane
1604 wbfr Haus OR to Bandera	40	2252	4	563.0	0.992	558
1604 wbfr Bandera to OFR	40	2117	2	1,058.5	0.992	1,050
Ramps						
EB 1604 Braun OR	45	1662	1	1,662.0	0.98	1,629
EB Hausman OFR	45	651	1	651.0	0.98	638
EB 1604 Bandera OR	45	1742	1	1,742.0	0.98	1,707
EB Hausman OR	45	863	1	863.0	0.98	846
EB Babcock OFR	45	669	2	334.5	0.98	328
EB KSP OR	45	1302	1	1,302.0	0.98	1,276
EB Brenan OFR	45	606	1	606.0	0.98	594
EB 10DC OFR	40	3562	2	1,781.0	0.98	1,745
EB 10FR OFR	45	355	1	355.0	0.98	348
EB Feeder OFR	45	1349	1	1,349.0	0.98	1,322
EB Feeder OR	45	1361	1	1,361.0	0.97	1,320
EB VJ OR	45	1799	1	1,799.0	0.97	1,745
EB 10DC OR	40	3037	2	1,518.5	0.97	1,473
EB Mil OFR	45	1072	1	1,072.0	0.97	1,040
EB Bitters OFR	45	1355	1	1,355.0	0.97	1,314
EB Mil OR	45	1236	1	1,236.0	0.97	1,199
EB Bitters OR	45	942	1	942.0	0.97	914
EB Blanco BP OFR	45	2600	2	1,300.0	0.97	1,261
EB Blanco BP OFR to FR	45	897	1	897.0	0.97	870
EB Blanco BP OR from FR	45	1132	1	1,132.0	0.97	1,098
EB Blanco BP1	45	1703	1	1,703.0	0.97	1,652
EB Blanco BP	45	2835	2	1,417.5	0.97	1,375
EB BP OR	45	814	1	814.0	0.97	790
EB BP OFR to FR	45	2021	1	2,021.0	0.97	1,960
EB Blanco OR	45	2004	1	2,004.0	0.97	1,944
EB 281FR OFR	45	1482	1	1,482.0	0.97	1,438
EB 281DC OFR	40	3066	2	1,533.0	0.97	1,487
EB Voight OR	45	808	1	808.0	0.97	784
EB 281FR OR	45	354	1	354.0	0.967	342
SBEB 281DC OR	40	613	1	613.0	0.967	593
NBEB 281DC OR	40	1486	1	1,486.0	0.967	1,437
EB 281DC OR	40	2099	1	2,099.0	0.967	2,030
EB Redl OFR	45	888	1	888.0	0.967	859
EB Bulv OFR	45	1485	2	742.5	0.958	711
EB Redl OR	45	617	1	617.0	0.958	591
EB OC OFR	45	509	1	509.0	0.958	488
EB Bulv OR	45	1747	1	1,747.0	0.958	1,674
EB Jud OFR	45	781	1	781.0	0.958	748
EB OC OR	45	491	1	491.0	0.958	470

Loop 1604 Design Condition 2045 AM

TNM Roadway Segment	Speed mph	AM Peak	# Lanes	DHV per lane	LD % mix	# of Auto each lane
EB GMT OFR	45	388	1	388.0	0.958	372
EB Jud OR	45	569	1	569.0	0.958	545
EB LO OFR	45	571	1	571.0	0.976	557
EB Nac OR	45	2578	1	2,578.0	0.976	2,516
EB RB OFR	45	336	1	336.0	0.976	328
EB LO OR	45	1177	1	1,177.0	0.976	1,149
EB I35DC OFR	40	2818	2	1,409.0	0.976	1,375
EB I35DC OR from FR	40	296	1	296.0	0.955	283
EB I35DC	40	3114	2	1,557.0	0.955	1,487
WB I35DC OR	40	2563	1	2,563.0	0.955	2,448
WB I35DC OFR	40	254	1	254.0	0.955	243
WB LO OFR	45	675	1	675.0	0.976	659
WB Nac OFR	45	1606	1	1,606.0	0.976	1,567
WB Nac OR	45	622	1	622.0	0.958	596
WB RR FR OR	45	861	1	861.0	0.958	825
WB Jud OFR	45	1107	1	1,107.0	0.958	1,061
WB GMT OR	45	234	1	234.0	0.958	224
WB OC OFR	45	475	1	475.0	0.958	455
WB Jud OR	45	815	1	815.0	0.958	781
WB Bulv OFR	45	919	1	919.0	0.958	880
WB OC OR	45	1486	1	1,486.0	0.958	1,424
WB Redl OFR	45	481	1	481.0	0.958	461
WB Bulv OR	45	2345	1	2,345.0	0.958	2,247
WB Redl OR	45	1968	1	1,968.0	0.967	1,903
WB 281DC OFR	40	2957	2	1,478.5	0.967	1,430
WB 281FR OFR	45	657	1	657.0	0.967	635
NBWB 281DC	40	3374	2	1,687.0	0.97	1,636
WB SOP OFR	45	1323	1	1,323.0	0.97	1,283
WB 281DC OR	40	2051	2	1,025.5	0.97	995
WB 281FR OR	45	945	1	945.0	0.97	917
WB Blanco OFR	45	1944	2	972.0	0.97	943
WB BP OFR to FR	45	1289	1	1,289.0	0.97	1,250
WB BP OR from FR	45	1258	1	1,258.0	0.97	1,220
WB BP 1	45	655	1	655.0	0.97	635
WB Blanco BP	45	1913	2	956.5	0.97	928
WB BP2 OFR to FR	45	842	1	842.0	0.97	817
WB BP OR	45	1071	1	1,071.0	0.97	1,039
WB Blanco OR	45	1463	1	1,463.0	0.97	1,419
WB Rog OFR	45	450	1	450.0	0.97	437
WB Mil OFR	45	1499	1	1,499.0	0.97	1,454
WB Rog OR	45	978	1	978.0	0.97	949
WB LS OFR	45	1683	1	1,683.0	0.97	1,633
WB Mil OR	45	2500	1	2,500.0	0.97	2,425

Loop 1604 Design Condition 2045 AM

TNM Roadway Segment	Speed mph	AM Peak	# Lanes	DHV per lane	LD % mix	# of Auto each lane
WB 10DC OFR	40	4407	2	2,203.5	0.97	2,137
WB LS OR	45	561	1	561.0	0.97	544
WB Feeder OFR	45	2605	1	2,605.0	0.97	2,527
WB Feeder OR from FR	45	148	1	148.0	0.98	145
WB LC Bypass	40	972	1	972.0	0.98	953
WB Feeder OFR to FR	45	2753	2	1,376.5	0.98	1,349
WB 10FR OR	45	300	1	300.0	0.98	294
WB 10DC OR 2 ln	40	2420	2	1,210.0	0.98	1,186
WB 10DC OR 3 ln	40	2420	3	806.7	0.98	791
WB KSP OFR	45	434	2	217.0	0.98	213
WB Babcock OR	45	684	1	684.0	0.98	670
WB Haus OFR	45	209	1	209.0	0.98	205
WB Bandera OFR	45	1431	2	715.5	0.98	701
WB Haus OR	45	1250	1	1,250.0	0.98	1,225
WB Braun OFR	45	643	1	643.0	0.98	630
10NB FR OFR	45	1958	1	1,958.0	0.979	1,917
10NB 1604FR OFR	45	20	1	20.0	0.979	20
10NB DC OFR	40	3256	2	1,628.0	0.979	1,594
10SB DCES	40	2953	2	1,476.5	0.979	1,445
10SB DCES1	40	5879	3	1,959.7	0.979	1,919
10SB DCES2	40	5879	2	2,939.5	0.979	2,878
10NB DCNE	40	1368	1	1,368.0	0.979	1,339
10SB OR from sbfr	45	718	1	718.0	0.979	703
10SB OFR to FR	45	750	1	750.0	0.97	728
10NB DC OR	40	2090	3	696.7	0.97	676
10NB DC OR 2	40	1740	2	870.0	0.97	844
DC Ramp to NBFR 2ln	45	1191	2	595.5	0.97	578
DC Ramp to NBFR 1ln	45	350	1	350.0	0.97	340
LC Bypass Ramp from FR	45	841	1	841.0	0.97	816
10NB de Zavala OR	45	1325	1	1,325.0	0.97	1,285
10NB LC OFR	45	1012	2	506.0	0.97	491
10SB 1604FR OFR	45	544	1	544.0	0.97	528
10SB DC OFR	40	2201	2	1,100.5	0.97	1,067
10SB de Zavala OFR	45	1033	1	1,033.0	0.97	1,002
LC ETA	25	892	1	892.0	0.992	885
LC WTA	25	12	1	12.0	0.992	12
Brenan ETA	25	154	1	154.0	0.992	153
Brenan WTA	25	29	1	29.0	0.992	29
Babcock ETA	25	309	1	309.0	0.992	307
Babcock WTA	25	192	1	192.0	0.992	190
1560 ETA	25	29	1	29.0	0.992	29
1560 WTA	25	287	1	287.0	0.992	285
Bandera ETA	25	1406	1	1,406.0	0.992	1,395

Loop 1604 Design Condition 2045 AM

TNM Roadway Segment	Speed mph	AM Peak	# Lanes	DHV per lane	LD % mix	# of Auto each lane
Bandera WTA	25	896	1	896.0	0.992	889
KSP ETA	25	127	1	127.0	0.992	126
KSP WTA	25	215	1	215.0	0.992	213
LS ETA	25	156	1	156.0	0.974	152
LS WTA	25	335	1	335.0	0.974	326
Mil ETA	25	922	1	922.0	0.974	898
Mil WTA	25	357	1	357.0	0.974	348
Blanco ETA	25	244	1	244.0	0.974	238
Blanco WTA	25	182	1	182.0	0.974	177
SO ETA	25	594	1	594.0	0.974	579
SO WTA	25	240	1	240.0	0.974	234
GC WTA	25	318	1	318.0	0.967	308
GC ETA	25	61	1	61.0	0.967	59
Redl ETA	25	145	1	145.0	0.967	140
Redl WTA	25	232	1	232.0	0.967	224
Bulv ETA	25	152	1	152.0	0.983	149
Bulv WTA	25	511	1	511.0	0.983	502
OC ETA	25	78	1	78.0	0.983	77
OC WTA	25	118	1	118.0	0.983	116
Jud ETA	25	168	1	168.0	0.983	165
Jud WTA	25	240	1	240.0	0.983	236
Nac ETA	25	130	1	130.0	0.983	128
Nac WTA	25	112	1	112.0	0.983	110
Hueb ETA	25	132	1	132.0	0.974	129
Hueb WTA	25	91	1	91.0	0.974	89
Bitters ETA	25	308	1	308.0	0.974	300
Bitters WTA	25	479	1	479.0	0.974	467
10NB CB OFR	45	1373	1	1,373.0	0.97	1,332
10NB LC OR	45	814	1	814.0	0.97	790
10SB SO OR	45	4488	1	4,488.0	0.97	4,353
LC STA	25	221	1	221.0	0.974	215
LC NTA	25	321	1	321.0	0.974	313
LO ETA	25	627	1	627.0	0.988	619
LO WTA	25	4	1	4.0	0.988	4
GMT ETA	25	200	1	200.0	0.988	198
GMT WTA	25	102	1	102.0	0.988	101
VJ ETA	25	389	1	389.0	0.988	384
Cross Streets						
SB Bandera n of 1604	45	2695	3	898.3	0.992	891
SB Bandera s of 1604	45	1923	3	641.0	0.992	636
SB Bandera at 1604	45	1705	3	568.3	0.992	564
NB Bandera n of 1604	45	1893	3	631.0	0.992	626

Loop 1604 Design Condition 2045 AM

TNM Roadway Segment	Speed mph	AM Peak	# Lanes	DHV per lane	LD % mix	# of Auto each lane
NB Bandera s of 1604	45	2455	4	613.8	0.992	609
NB Bandera at 1604	45	1418	4	354.5	0.992	352
SB 1560 n of 1604	45	2136	3	712.0	0.992	706
SB Hausman s of 1604	45	1747	2	873.5	0.992	867
SB Hausman at 1604	45	1846	3	615.3	0.992	610
NB 1560 n of 1604	45	526	2	263.0	0.992	261
NB Hausman s of 1604	45	792	3	264.0	0.992	262
NB Hausman at 1604	45	873	3	291.0	0.992	289
SB Babcock n of 1604	40	827	1	827.0	0.992	820
SB Babcock n of 1604 2 ln	40	827	2	413.5	0.992	410
SB Babcock s of 1604	40	910	1	910.0	0.992	903
SB Babcock at 1604	40	723	2	361.5	0.992	359
NB Babcock n of 1604	40	687	2	343.5	0.992	341
NB Babcock s of 1604	40	723	2	361.5	0.992	359
NB Babcock at 1604	40	647	2	323.5	0.992	321
SB CH n of 1604	30	769	1	769.0	0.992	763
SB Brennan s of 1604	20	925	2	462.5	0.992	459
SB Brennan at 1604	30	779	2	389.5	0.992	386
NB CH n of 1604	30	242	1	242.0	0.992	240
NB Brennan s of 1604	20	152	2	76.0	0.992	75
NB Brennan at 1604	30	223	2	111.5	0.992	111
SB LC n of 1604	40	278	2	139.0	0.992	138
SB JP s of 1604	20	1127	2	563.5	0.992	559
SB LC at 1604	40	998	3	332.7	0.992	330
NB LC n of 1604	40	1023	2	511.5	0.992	507
NB JP s of 1604	20	285	3	95.0	0.992	94
NB LC at 1604	40	637	3	212.3	0.992	211
SB VJ n of 1604	40	789	2	394.5	0.974	384
SB VJ at 1604	40	852	2	426.0	0.974	415
SB VJ s of 1604	40	573	2	286.5	0.974	279
NB VJ s of 1604	40	819	2	409.5	0.974	399
NB VJ at 1604	40	477	2	238.5	0.974	232
NB VJ n of 1604	40	406	2	203.0	0.974	198
SB LS at 1604	35	642	2	321.0	0.974	313
SB LS s of 1604	35	1718	2	859.0	0.974	837
NB LS s o 1604	35	837	2	418.5	0.974	408
NB LS at 1604	35	514	2	257.0	0.974	250

Loop 1604 Design Condition 2045 AM

TNM Roadway Segment	Speed mph	AM Peak	# Lanes	DHV per lane	LD % mix	# of Auto each lane
SB Mil n of 1604	45	1318	2	659.0	0.974	642
SB Mil at 1604	45	1214	2	607.0	0.974	591
SB Mil s of 1604	45	1555	2	777.5	0.974	757
NB Mil s of 1604	45	1595	2	797.5	0.974	777
NB Mil at 1604	45	1521	2	760.5	0.974	741
NB Mil n of 1604	45	1050	2	525.0	0.974	511
SB Rog n of 1604	30	1622	1	1,622.0	0.974	1,580
SB Bit at 1604	30	1087	1	1,087.0	0.974	1,059
SB Bit s of 1604	30	895	1	895.0	0.974	872
NB Bit s of 1604	30	975	1	975.0	0.974	950
NB Bit at 1604	30	951	1	951.0	0.974	926
NB Rog n of 1604	30	894	1	894.0	0.974	871
SB Hueb n of 1604	40	2137	2	1,068.5	0.974	1,041
SB Hueb at 1604	40	1703	2	851.5	0.974	829
SB Hueb s of 1604	40	1501	2	750.5	0.974	731
NB Hueb s of 1604	40	889	2	444.5	0.974	433
NB Hueb at 1604	40	827	2	413.5	0.974	403
NB Hueb n of 1604	40	941	2	470.5	0.974	458
SB Blanco n of 1604	45	3688	3	1,229.3	0.974	1,197
SB Blanco at 1604	45	3208	2	1,604.0	0.974	1,562
SB Blanco s of 1604	45	2163	2	1,081.5	0.974	1,053
NB Blanco s of 1604	45	1565	3	521.7	0.974	508
NB Blanco at 1604	45	1133	2	566.5	0.974	552
NB Blanco n of 1604	45	1371	2	685.5	0.974	668
SB SO n of 1604	40	2150	2	1,075.0	0.974	1,047
SB SO at 1604	40	1358	2	679.0	0.974	661
SB Voight s of 1604	25	234	1	234.0	0.974	228
NB Voight s of 1604	25	353	2	176.5	0.974	172
NB SO at 1604	40	1840	2	920.0	0.974	896
NB SO n of 1604	40	3180	2	1,590.0	0.974	1,549
SB CBC n of 1604	25	13	2	6.5	0.966	6
SB GC at 1604	30	216	2	108.0	0.966	104
SB GC s of 1604	30	546	2	273.0	0.966	264
NB GC s of 1604	30	449	2	224.5	0.966	217
NB GC at 1604	30	335	2	167.5	0.966	162
NB CBC n of 1604	25	41	1	41.0	0.966	40

Loop 1604 Design Condition 2045 AM

TNM Roadway Segment	Speed mph	AM Peak	# Lanes	DHV per lane	LD % mix	# of Auto each lane
SB Red n of 1604	40	921	2	460.5	0.966	445
SB Red at 1604	40	506	2	253.0	0.966	244
SB Red s of 1604	40	885	1	885.0	0.966	855
NB Red s of 1604	40	1044	1	1,044.0	0.966	1,009
NB Red at 1604	40	927	2	463.5	0.966	448
NB Red n of 1604	40	1027	2	513.5	0.966	496
SB Jud n of 1604	40	8	2	4.0	0.983	4
SB Jud at 1604	40	319	2	159.5	0.983	157
SB Jud s of 1604	40	859	2	429.5	0.983	422
NB Jud s of 1604	40	1088	2	544.0	0.983	535
NB Jud at 1604	40	822	2	411.0	0.983	404
NB Jud n of 1604	40	212	2	106.0	0.983	104
SB Bulv n of 1604	45	5057	2	2,528.5	0.983	2,486
SB Bulv at 1604	40	3109	2	1,554.5	0.983	1,528
SB Bulv s of 1604	40	2140	2	1,070.0	0.983	1,052
NB Bulv s of 1604	40	1740	2	870.0	0.983	855
NB Bulv at 1604	40	2053	2	1,026.5	0.983	1,009
NB Bulv n of 1604	45	2258	2	1,129.0	0.983	1,110
SB OC at 1604	40	269	2	134.5	0.983	132
SB OC s of 1604	40	926	2	463.0	0.983	455
NB OC s of 1604	40	1407	2	703.5	0.983	692
NB OC at 1604	40	1003	2	501.5	0.983	493
SB Nac n of 1604	45	2006	3	668.7	0.983	657
SB Nac at 1604	45	2613	3	871.0	0.983	856
SB Nac s of 1604	45	2058	2	1,029.0	0.983	1,012
NB Nac s of 1604	45	1277	2	638.5	0.983	628
NB Nac at 1604	45	933	3	311.0	0.983	306
NB Nac n of 1604	45	1684	2	842.0	0.983	828
SB GMT n of 1604	40	1028	1	1,028.0	0.983	1,011
SB GMT at 1604	40	869	2	434.5	0.983	427
SB GMT s of 1604	40	382	1	382.0	0.983	376
NB GMT s of 1604	40	279	1	279.0	0.983	274
NB GMT at 1604	40	285	2	142.5	0.983	140
NB GMT n of 1604	40	850	1	850.0	0.983	836

MD % mix	# of Medium Truck each lane	HD % mix	# of Heavy Truck each lane
0.011	20	0.009	17
0.011	10	0.009	8
0.011	12	0.009	10
0.011	11	0.009	9
0.011	12	0.009	10
0.011	13	0.009	11
0.011	13	0.009	10
0.011	14	0.009	11
0.011	17	0.009	14
0.011	16	0.009	13
0.011	15	0.009	12
0.011	12	0.009	10
0.011	11	0.009	9
0.011	6	0.009	5
0.009	7	0.021	15
0.009	9	0.021	21
0.009	14	0.021	33
0.009	14	0.021	33
0.009	15	0.021	35
0.009	11	0.021	27
0.009	14	0.021	33
0.009	13	0.021	31
0.009	11	0.021	25
0.009	13	0.021	31
0.009	14	0.021	33
0.009	14	0.021	34
0.009	10	0.021	23
0.009	12	0.021	29
0.009	10	0.024	27
0.009	12	0.024	32
0.009	10	0.024	27
0.012	13	0.03	32
0.012	11	0.03	28
0.012	12	0.03	31
0.012	14	0.03	35
0.012	15	0.03	38
0.012	13	0.03	33
0.012	16	0.03	39
0.012	14	0.03	35
0.012	15	0.03	38
0.007	8	0.017	19
0.007	9	0.017	23

MD % mix	# of Medium Truck each lane	HD % mix	# of Heavy Truck each lane
0.007	12	0.017	28
0.007	12	0.017	29
0.013	26	0.032	63
0.013	21	0.032	51
0.007	13	0.017	33
0.007	10	0.017	25
0.007	9	0.017	22
0.007	11	0.017	27
0.012	14	0.03	35
0.012	17	0.03	43
0.012	15	0.03	38
0.012	16	0.03	41
0.012	13	0.03	32
0.012	11	0.03	27
0.012	12	0.03	30
0.012	12	0.03	29
0.012	12	0.03	29
0.012	13	0.03	32
0.012	15	0.03	37
0.009	13	0.024	36
0.009	17	0.024	44
0.009	17	0.024	45
0.009	21	0.024	56
0.009	19	0.024	51
0.009	17	0.021	40
0.009	13	0.021	30
0.009	11	0.021	27
0.009	14	0.021	33
0.009	13	0.021	31
0.009	12	0.021	28
0.009	14	0.021	32
0.009	14	0.021	32
0.009	16	0.021	37
0.009	13	0.021	29
0.009	12	0.021	27
0.009	11	0.021	26
0.009	13	0.021	31
0.009	9	0.021	21
0.009	8	0.021	19
0.011	4	0.009	3
0.011	4	0.009	3
0.011	8	0.009	7
0.011	9	0.009	7

MD % mix	# of Medium Truck each lane	HD % mix	# of Heavy Truck each lane
0.011	8	0.009	6
0.011	7	0.009	6
0.011	5	0.009	4
0.011	7	0.009	5
0.011	11	0.009	9
0.011	11	0.009	9
0.011	13	0.009	10
0.011	19	0.009	16
0.012	7	0.03	18
0.007	3	0.017	6
0.007	3	0.017	6
0.012	5	0.03	11
0.012	5	0.03	11
0.012	5	0.03	11
0.012	5	0.03	11
0.012	5	0.03	13
0.012	5	0.03	13
0.012	5	0.03	13
0.012	5	0.03	13
0.012	5	0.03	13
0.012	5	0.03	13
0.009	3	0.024	7
0.009	3	0.024	7
0.009	3	0.024	7
0.009	3	0.024	7
0.009	3	0.024	7
0.009	3	0.021	6
0.009	3	0.021	6
0.009	3	0.021	6
0.009	3	0.021	6
0.009	3	0.021	6
0.009	3	0.021	6
0.009	6	0.021	14
0.009	6	0.021	14
0.009	6	0.021	14
0.009	6	0.021	14
0.009	6	0.021	14
0.009	5	0.021	11
0.009	5	0.021	11
0.009	5	0.021	11
0.009	5	0.021	11
0.011	6	0.009	5
0.011	6	0.009	5

MD % mix	# of Medium Truck each lane	HD % mix	# of Heavy Truck each lane
0.011	6	0.009	5
0.011	6	0.009	5
0.011	12	0.009	10
0.011	12	0.009	10
0.011	12	0.009	10
0.011	12	0.009	10
0.009	3	0.021	8
0.009	3	0.024	9
0.009	3	0.024	9
0.009	3	0.024	9
0.012	4	0.03	11
0.012	7	0.03	18
0.012	7	0.03	18
0.012	7	0.03	18
0.012	7	0.03	18
0.012	7	0.03	18
0.012	7	0.03	18
0.012	7	0.03	18
0.009	7	0.021	16
0.009	3	0.021	8
0.009	3	0.021	8
0.009	3	0.021	8
0.009	3	0.021	8
0.011	6	0.009	5
0.009	5	0.021	11
0.009	5	0.021	11
0.009	5	0.021	11
0.009	5	0.021	11
0.009	5	0.021	11
0.009	7	0.021	16
0.009	7	0.021	16
0.009	7	0.021	16
0.011	5	0.009	4
0.011	5	0.009	4
0.011	5	0.009	4
0.011	5	0.009	4
0.011	5	0.009	4
0.011	5	0.009	4
0.011	6	0.009	5
0.011	6	0.009	5
0.011	6	0.009	5
0.011	6	0.009	5

MD % mix	# of Medium Truck each lane	HD % mix	# of Heavy Truck each lane
0.007	2	0.023	7
0.007	4	0.023	14
0.008	16	0.013	25
0.008	15	0.013	24
0.008	14	0.013	23
0.008	10	0.013	17
0.008	10	0.013	17
0.007	8	0.023	28
0.007	6	0.023	20
0.007	6	0.023	20
0.007	5	0.023	17
0.007	7	0.023	23
0.007	15	0.023	49
0.007	15	0.023	49
0.007	13	0.023	43
0.008	17	0.013	27
0.008	19	0.013	30
0.008	21	0.013	33
0.008	19	0.013	31
0.016	15	0.01	9
0.016	6	0.01	3
0.016	8	0.01	5
0.016	16	0.01	10
0.016	10	0.01	6
0.016	9	0.01	6
0.016	6	0.01	4
0.016	5	0.01	3
0.016	8	0.01	5
0.016	8	0.01	5
0.016	10	0.01	7
0.016	16	0.01	10
0.016	8	0.01	5
0.016	29	0.01	18
0.007	11	0.023	35
0.007	16	0.023	52
0.016	10	0.01	6
0.016	8	0.01	5
0.016	6	0.01	3
0.016	17	0.01	11
0.016	4	0.01	3
0.016	30	0.01	19
0.016	6	0.01	4

MD % mix	# of Medium Truck each lane	HD % mix	# of Heavy Truck each lane
0.005	5	0.003	3
0.005	10	0.003	6
0.005	7	0.003	4
0.005	6	0.003	4
0.005	5	0.003	3
0.005	5	0.003	3
0.005	5	0.003	3
0.005	8	0.003	5
0.005	7	0.003	4
0.005	4	0.003	3
0.005	4	0.003	3
0.005	4	0.003	2
0.005	4	0.003	2
0.005	6	0.003	4
0.005	5	0.003	3
0.005	2	0.003	1
0.008	14	0.018	31
0.008	16	0.018	37
0.008	9	0.018	20
0.008	5	0.018	11
0.008	5	0.018	12
0.008	9	0.018	21
0.008	10	0.018	22
0.008	5	0.018	11
0.008	5	0.018	11
0.008	3	0.018	7
0.008	4	0.018	10
0.008	5	0.018	12
0.008	2	0.018	5
0.008	10	0.018	22
0.008	18	0.018	40
0.008	8	0.018	19
0.008	8	0.018	19
0.008	10	0.018	22
0.008	7	0.018	17
0.01	4	0.024	10
0.01	3	0.024	7
0.01	2	0.024	5
0.005	2	0.012	6
0.005	4	0.012	10
0.005	3	0.012	7

MD % mix	# of Medium Truck each lane	HD % mix	# of Heavy Truck each lane
0.005	5	0.012	13
0.005	4	0.012	11
0.005	2	0.012	4
0.005	2	0.012	4
0.005	2	0.012	6
0.005	2	0.012	4
0.005	2	0.012	4
0.005	2	0.012	4
0.005	1	0.012	2
0.005	4	0.012	11
0.005	1	0.012	1
0.005	3	0.012	8
0.004	6	0.008	11
0.004	0	0.008	1
0.004	1	0.008	3
0.004	1	0.008	3
0.004	2	0.008	3
0.004	0	0.008	0
0.004	0	0.008	1
0.004	1	0.008	3
0.004	2	0.008	4
0.004	1	0.008	3
0.004	1	0.008	2
0.004	2	0.008	3
0.004	2	0.008	4
0.004	3	0.008	6
0.004	0	0.008	0
0.004	0	0.008	0
0.004	1	0.008	2
0.004	3	0.008	6
0.004	2	0.008	4
0.005	2	0.012	5
0.005	1	0.012	1
0.005	0	0.012	1
0.005	1	0.012	1
0.005	2	0.012	4
0.005	3	0.012	7
0.005	2	0.012	6
0.005	5	0.012	11
0.005	4	0.012	9
0.005	3	0.012	6
0.005	6	0.012	14
0.005	5	0.012	13

MD % mix	# of Medium Truck each lane	HD % mix	# of Heavy Truck each lane
0.005	3	0.012	7
0.005	10	0.012	23
0.005	7	0.012	18
0.005	3	0.012	8
0.01	8	0.024	20
0.01	3	0.024	6
0.01	4	0.024	10
0.01	4	0.024	10
0.008	7	0.018	15
0.008	6	0.018	14
0.008	6	0.018	13
0.008	7	0.018	17
0.008	6	0.018	13
0.008	7	0.018	15
0.008	7	0.018	15
0.008	4	0.018	10
0.008	5	0.018	12
0.008	5	0.018	11
0.008	10	0.018	23
0.008	11	0.018	25
0.008	9	0.018	20
0.008	13	0.018	29
0.008	3	0.018	7
0.008	7	0.018	15
0.008	10	0.018	22
0.008	8	0.018	17
0.008	8	0.018	17
0.008	6	0.018	14
0.008	5	0.018	11
0.005	3	0.003	2
0.005	5	0.003	3
0.005	6	0.003	3
0.005	4	0.003	3
0.005	1	0.003	1
0.005	1	0.003	0
0.005	2	0.003	1
0.005	3	0.003	2
0.005	3	0.003	2
0.005	2	0.003	1
0.005	2	0.003	1
0.005	2	0.003	1
0.005	5	0.003	3
0.005	4	0.003	3

MD % mix	# of Medium Truck each lane	HD % mix	# of Heavy Truck each lane
0.005	3	0.003	2
0.005	5	0.003	3
0.011	18	0.009	15
0.011	7	0.009	6
0.011	19	0.009	16
0.011	9	0.009	8
0.011	4	0.009	3
0.011	14	0.009	12
0.011	7	0.009	5
0.011	20	0.009	16
0.011	4	0.009	3
0.011	15	0.009	12
0.009	12	0.021	29
0.009	16	0.021	38
0.009	14	0.021	32
0.009	10	0.021	23
0.009	12	0.021	28
0.009	11	0.021	26
0.009	8	0.021	20
0.009	12	0.021	27
0.009	8	0.021	19
0.009	10	0.021	24
0.009	15	0.021	36
0.009	13	0.021	30
0.009	7	0.021	17
0.009	18	0.021	42
0.009	18	0.021	42
0.009	13	0.021	31
0.009	14	0.021	32
0.009	7	0.021	17
0.009	3	0.024	8
0.009	6	0.024	15
0.009	13	0.024	36
0.009	19	0.024	50
0.009	8	0.024	21
0.012	9	0.03	22
0.012	7	0.03	19
0.012	6	0.03	15
0.012	21	0.03	52
0.012	9	0.03	23
0.012	6	0.03	15

MD % mix	# of Medium Truck each lane	HD % mix	# of Heavy Truck each lane
0.012	5	0.03	12
0.012	7	0.03	17
0.007	4	0.017	10
0.007	18	0.017	44
0.007	2	0.017	6
0.007	8	0.017	20
0.007	10	0.017	24
0.013	4	0.032	9
0.013	20	0.032	50
0.013	33	0.032	82
0.013	3	0.032	8
0.007	5	0.017	11
0.007	11	0.017	27
0.012	7	0.03	19
0.012	10	0.03	26
0.012	13	0.03	33
0.012	3	0.03	7
0.012	6	0.03	14
0.012	10	0.03	24
0.012	11	0.03	28
0.012	18	0.03	45
0.012	6	0.03	14
0.012	28	0.03	70
0.009	18	0.024	47
0.009	13	0.024	35
0.009	6	0.024	16
0.009	15	0.021	35
0.009	12	0.021	28
0.009	9	0.021	22
0.009	9	0.021	20
0.009	9	0.021	20
0.009	12	0.021	27
0.009	11	0.021	26
0.009	6	0.021	14
0.009	9	0.021	20
0.009	8	0.021	18
0.009	10	0.021	22
0.009	13	0.021	31
0.009	4	0.021	9
0.009	13	0.021	31
0.009	9	0.021	21
0.009	15	0.021	35
0.009	23	0.021	53

MD % mix	# of Medium Truck each lane	HD % mix	# of Heavy Truck each lane
0.009	20	0.021	46
0.009	5	0.021	12
0.009	23	0.021	55
0.011	2	0.009	1
0.011	11	0.009	9
0.011	15	0.009	12
0.011	3	0.009	3
0.011	13	0.009	11
0.011	9	0.009	7
0.011	2	0.009	2
0.011	8	0.009	6
0.011	2	0.009	2
0.011	8	0.009	6
0.011	14	0.009	11
0.011	7	0.009	6
0.008	16	0.013	25
0.008	0	0.013	0
0.008	13	0.013	21
0.008	12	0.013	19
0.008	16	0.013	25
0.008	24	0.013	38
0.008	11	0.013	18
0.008	6	0.013	9
0.007	5	0.023	17
0.007	5	0.023	16
0.007	6	0.023	20
0.007	4	0.023	14
0.007	2	0.023	8
0.007	6	0.023	19
0.007	9	0.023	30
0.007	4	0.023	12
0.007	4	0.023	13
0.007	8	0.023	25
0.007	7	0.023	24
0.005	4	0.003	3
0.005	0	0.003	0
0.005	1	0.003	0
0.005	0	0.003	0
0.005	2	0.003	1
0.005	1	0.003	1
0.005	0	0.003	0
0.005	1	0.003	1
0.005	7	0.003	4

MD % mix	# of Medium Truck each lane	HD % mix	# of Heavy Truck each lane
0.005	4	0.003	3
0.005	1	0.003	0
0.005	1	0.003	1
0.008	1	0.018	3
0.008	3	0.018	6
0.008	7	0.018	17
0.008	3	0.018	6
0.008	2	0.018	4
0.008	1	0.018	3
0.008	5	0.018	11
0.008	2	0.018	4
0.009	3	0.024	8
0.009	1	0.024	1
0.009	1	0.024	3
0.009	2	0.024	6
0.005	1	0.012	2
0.005	3	0.012	6
0.005	0	0.012	1
0.005	1	0.012	1
0.005	1	0.012	2
0.005	1	0.012	3
0.005	1	0.012	2
0.005	1	0.012	1
0.008	1	0.018	2
0.008	1	0.018	2
0.008	2	0.018	6
0.008	4	0.018	9
0.007	10	0.023	32
0.007	6	0.023	19
0.007	31	0.023	103
0.016	4	0.01	2
0.016	5	0.01	3
0.004	3	0.008	5
0.004	0	0.008	0
0.004	1	0.008	2
0.004	0	0.008	1
0.004	2	0.008	3
0.005	4	0.003	3
0.005	3	0.003	2
0.005	3	0.003	2
0.005	3	0.003	2

MD % mix	# of Medium Truck each lane	HD % mix	# of Heavy Truck each lane
0.005	3	0.003	2
0.005	2	0.003	1
0.005	4	0.003	2
0.005	4	0.003	3
0.005	3	0.003	2
0.005	1	0.003	1
0.005	1	0.003	1
0.005	1	0.003	1
0.005	4	0.003	2
0.005	2	0.003	1
0.005	5	0.003	3
0.005	2	0.003	1
0.005	2	0.003	1
0.005	2	0.003	1
0.005	2	0.003	1
0.005	4	0.003	2
0.005	2	0.003	1
0.005	2	0.003	1
0.005	1	0.003	1
0.005	0	0.003	0
0.005	1	0.003	0
0.005	1	0.003	0
0.005	3	0.003	2
0.005	2	0.003	1
0.005	3	0.003	2
0.005	0	0.003	0
0.005	1	0.003	1
0.008	3	0.018	7
0.008	3	0.018	8
0.008	2	0.018	5
0.008	3	0.018	7
0.008	2	0.018	4
0.008	2	0.018	4
0.008	3	0.018	6
0.008	7	0.018	15
0.008	3	0.018	8
0.008	2	0.018	5

MD % mix	# of Medium Truck each lane	HD % mix	# of Heavy Truck each lane
0.008	5	0.018	12
0.008	5	0.018	11
0.008	6	0.018	14
0.008	6	0.018	14
0.008	6	0.018	14
0.008	4	0.018	9
0.008	13	0.018	29
0.008	9	0.018	20
0.008	7	0.018	16
0.008	8	0.018	18
0.008	8	0.018	17
0.008	7	0.018	16
0.008	9	0.018	19
0.008	7	0.018	15
0.008	6	0.018	14
0.008	4	0.018	8
0.008	3	0.018	7
0.008	4	0.018	8
0.008	10	0.018	22
0.008	13	0.018	29
0.008	9	0.018	19
0.008	4	0.018	9
0.008	5	0.018	10
0.008	5	0.018	12
0.008	9	0.018	19
0.008	5	0.018	12
0.008	2	0.018	4
0.008	1	0.018	3
0.008	7	0.018	17
0.008	13	0.018	29
0.01	0	0.024	0
0.01	1	0.024	3
0.01	3	0.024	7
0.01	2	0.024	5
0.01	2	0.024	4
0.01	0	0.024	1

MD % mix	# of Medium Truck each lane	HD % mix	# of Heavy Truck each lane
0.01	5	0.024	11
0.01	3	0.024	6
0.01	9	0.024	21
0.01	10	0.024	25
0.01	5	0.024	11
0.01	5	0.024	12
0.005	0	0.012	0
0.005	1	0.012	2
0.005	2	0.012	5
0.005	3	0.012	7
0.005	2	0.012	5
0.005	1	0.012	1
0.005	13	0.012	30
0.005	8	0.012	19
0.005	5	0.012	13
0.005	4	0.012	10
0.005	5	0.012	12
0.005	6	0.012	14
0.005	1	0.012	2
0.005	2	0.012	6
0.005	4	0.012	8
0.005	3	0.012	6
0.005	3	0.012	8
0.005	4	0.012	10
0.005	5	0.012	12
0.005	3	0.012	8
0.005	2	0.012	4
0.005	4	0.012	10
0.005	5	0.012	12
0.005	2	0.012	5
0.005	2	0.012	5
0.005	1	0.012	3
0.005	1	0.012	2
0.005	4	0.012	10

Loop 1604 Design Condition 2045 PM

TNM Roadway Segment	Speed mph	PM Peak	# Lanes	DHV per lane	LD % mix	# of Auto each lane
Loop 1604 Mainlanes						
1604 ebml w of Braun OR	60	3854	2	1,927.0	0.98	1,888
1604 ebml w of Braun OR 4 ln	60	3854	4	963.5	0.98	944
1604 ebml Braun OR to HOV start	60	4818	5	963.6	0.98	944
1604 ebml HOV start to Haus OFR	60	4537	5	907.4	0.98	889
1604 ebml Haus OFR to Band OR	60	3297	4	824.3	0.98	808
1604 ebml Band OR to Haus OR	60	4869	5	973.8	0.98	954
1604 ebml Haus OR to Bab OFR	60	5307	6	884.5	0.98	867
1604 ebml n of Haus OR 5ln	60	4578	5	915.6	0.98	897
1604 ebml s of KSP OR	60	4578	4	1,144.5	0.98	1,122
1604 ebml KSP OR to Bren OFR	60	5308	5	1,061.6	0.98	1,040
1604 ebml Bren OFR to 10DC OFR	60	4530	5	906.0	0.98	888
1604 ebml 10DC OFR to FR OFR	60	1914	3	638.0	0.98	625
1604 ebml 10FR OFR to 1604 Feed	60	1596	3	532.0	0.98	521
1604 ebml at IH10	60	955	3	318.3	0.98	312
1604 ebml E of I10 4 ln	60	2259	4	564.8	0.97	548
1604 ebml E of I10 3 ln	60	2259	3	753.0	0.97	730
1604 ebml 10FR OR to 10DC OR	60	5010	3	1,670.0	0.97	1,620
1604 ebml 10DC OR to Mil OFR	60	7115	5	1,423.0	0.97	1,380
1604 ebml Mil OFR to Bitters OFR	60	6618	4	1,654.5	0.97	1,605
1604 ebml Bitters OFR to Mil OR	60	4958	4	1,239.5	0.97	1,202
1604 ebml Mil OR to Bitters OR	60	7108	4	1,777.0	0.97	1,724
1604 ebml Bitters OR to Blanco OFR	60	8124	5	1,624.8	0.97	1,576
1604 ebml Blanco OFR to Hueb OR	60	5691	4	1,422.8	0.97	1,380
1604 ebml Hueb OR to Blanco OR	60	6683	4	1,670.8	0.97	1,621
1604 ebml Blanco OR to 281FR OFR	60	8161	5	1,632.2	0.97	1,583
1604 ebml 281FROFR to 281DCOF	60	6650	4	1,662.5	0.97	1,613
1604 ebml 281DC OFR to Voight OR	60	4080	3	1,360.0	0.97	1,319
1604 ebml at US281	60	5581	3	1,860.3	0.97	1,805
1604 ebml FR OR to 281DC OR	60	5884	4	1,471.0	0.967	1,422
1604 ebml 281DC OR to Red OFR	60	8774	5	1,754.8	0.967	1,697
1604 ebml Red OFR to Bulv OFR	60	6970	5	1,394.0	0.967	1,348
1604 ebml Bulv OFR to Red OR	60	5366	4	1,341.5	0.958	1,285
1604 ebml Red OR to OC OFR	60	6097	5	1,219.4	0.958	1,168
1604 ebml OC OFR to Bulv OR	60	5360	4	1,340.0	0.958	1,284
1604 ebml Bulv OR to Jud OFR	60	6814	5	1,362.8	0.958	1,306
1604 ebml Jud OFR to OC OR	60	5777	4	1,444.3	0.958	1,384
1604 ebml OC OR to GMT OFR	60	6180	5	1,236.0	0.958	1,184
1604 ebml GMT OFR to Jud OR	60	5864	4	1,466.0	0.958	1,404
1604 ebml Jud OR to Nac OFR	60	6498	5	1,299.6	0.958	1,245
1604 ebml Nac OFR to LO OFR	60	5455	4	1,363.8	0.958	1,306
1604 ebml LO OFR to Nac OR	60	4914	4	1,228.5	0.976	1,199
1604 ebml Nac OR to FR OFR	60	7446	4	1,861.5	0.976	1,817

Loop 1604 Design Condition 2045 PM

TNM Roadway Segment	Speed mph	PM Peak	# Lanes	DHV per lane	LD % mix	# of Auto each lane
1604 ebml FR OFR to LO OR	60	5687	3	1,895.7	0.976	1,850
1604 ebml LO OR to I35DC OFR	60	7083	4	1,770.8	0.976	1,728
1604 ebml at I35	60	3461	2	1,730.5	0.955	1,653
1604 wbml at I35	60	3329	2	1,664.5	0.955	1,590
1604 wbml I35DC OR to LO OFR 3ln	60	5913	3	1,971.0	0.976	1,924
1604 wbml I35DC OR to LO OFR 4ln	60	5913	4	1,478.3	0.976	1,443
1604 wbml LO OFR to HOV OR	60	5158	4	1,289.5	0.976	1,259
1604 wbml HOV OR to Nac OFR	60	6453	4	1,613.3	0.976	1,575
1604 wbml Nac OFR to FR OR	60	4680	4	1,170.0	0.976	1,142
1604 wbml FR OR to Nac OR	60	5338	4	1,334.5	0.958	1,278
1604 wbml Nac OR to GMT OFR	60	6404	5	1,280.8	0.958	1,227
1604 wbml GMT OFR to Jud OFR	60	5608	4	1,402.0	0.958	1,343
1604 wbml Jud OFR to GMT OR	60	5216	4	1,304.0	0.958	1,249
1604 wbml GMT OR to OC OFR	60	5737	5	1,147.4	0.958	1,099
1604 wbml OC OFR to Jud OR	60	5302	4	1,325.5	0.958	1,270
1604 wbml Jud OR to Bulv OFR	60	6111	5	1,222.2	0.958	1,171
1604 wbml Bulv OFR to OC OR	60	4470	4	1,117.5	0.958	1,071
1604 wbml OC OR to Redl OFR	60	5077	5	1,015.4	0.958	973
1604 wbml Redl OFR to Bulv OR	60	3974	4	993.5	0.958	952
1604 wbml Bulv OR to Redl OR 5ln	60	5715	5	1,143.0	0.967	1,105
1604 wbml Bulv OR to Redl OR 4ln	60	5715	4	1,428.8	0.967	1,382
1604 wbml Redl OR to 281DC OFR 5ln	60	7012	5	1,402.4	0.967	1,356
1604 wbml RedOR to 281DC OFR 4	60	7012	4	1,753.0	0.967	1,695
1604 wbml 281D OF to 281F OFR	60	4669	3	1,556.3	0.967	1,505
1604 wbml at US281	60	4041	3	1,347.0	0.97	1,307
1604 wbml SOP OFR to 281DC OR	60	3199	3	1,066.3	0.97	1,034
1604 wbml w of 281DC OR 5 ln	60	6094	5	1,218.8	0.97	1,182
1604 wbml w of 281DC OR 4 ln	60	6094	4	1,523.5	0.97	1,478
1604 wbml 281FROR to BlanOFR	60	8134	5	1,626.8	0.97	1,578
1604 wbml Blanco OFR to BP OR	60	5699	4	1,424.8	0.97	1,382
1604 wbml BP OR to Blanco OR	60	6410	4	1,602.5	0.97	1,554
1604 wbml Blanco OR to Rog OFR	60	7072	5	1,414.4	0.97	1,372
1604 wbml Rog OFR to Mil OFR	60	6211	4	1,552.8	0.97	1,506
1604 wbml Mil OFR to Rog OR	60	4607	4	1,151.8	0.97	1,117
1604 wbml Rog OR to LS OFR	60	5250	5	1,050.0	0.97	1,019
1604 wbml LS OFR to Mil OR	60	3873	4	968.3	0.97	939
1604 wbml Mil OR to 10DC OFR	60	5973	5	1,194.6	0.97	1,159
1604 wbml 10DC OFR to LS OR	60	2187	3	729.0	0.97	707
1604 wbml LS OR to Feeder OFR	60	3306	4	826.5	0.97	802
1604 wbml at IH10	60	1943	3	647.7	0.98	635
1604 wbml Feeder to FR OR	60	1943	3	647.7	0.98	635
1604 wbml 10DC OR to KSP OFR	60	5134	5	1,026.8	0.98	1,006
1604 wbml KS OFR to Bab OR	60	4495	4	1,123.8	0.98	1,101

Loop 1604 Design Condition 2045 PM

TNM Roadway Segment	Speed mph	PM Peak	# Lanes	DHV per lane	LD % mix	# of Auto each lane
1604 wbml Bab OR to Haus OFR	60	5874	5	1,174.8	0.98	1,151
1604 wbml Haus OFR to Band OFR	60	5324	5	1,064.8	0.98	1,044
1604 wbml w of Band OFR 4 ln	60	4055	4	1,013.8	0.98	993
1604 wbml w of Band OFR 3 ln	60	4055	3	1,351.7	0.98	1,325
1604 wbml HOV end to Haus OR	60	4525	3	1,508.3	0.98	1,478
1604 wbml Haus OR to Braun OFR	60	6385	4	1,596.3	0.98	1,564
1604 wbml w of Braun OFR 3 ln	60	4547	3	1,515.7	0.98	1,485
1604 wbml w of Braun OFR 2 ln	60	4547	2	2,273.5	0.98	2,228
1604 eb HOV Nac OFR to LO OFR	60	427	1	427.0	0.958	409
1604 wb HOV HOV OR to Nac OFR	60	422	1	422.0	0.976	412
1604 wb HOV Nac OFR to FR OR	60	422	1	422.0	0.976	412
1604 wb HOV FR OR to Nac OR	60	422	1	422.0	0.958	404
1604 wb HOV Nac OR to GMT OFR	60	422	1	422.0	0.958	404
1604 wb HOV GMT OFR to Jud OFR	60	422	1	422.0	0.958	404
1604 wb HOV Jud OFR to GMT OR	60	422	1	422.0	0.958	404
1604 wb HOV GMT OR to OC OFR	60	368	1	368.0	0.958	353
1604 wb HOV OC OFR to Jud OR	60	368	1	368.0	0.958	353
1604 wb HOV Jud OR to Bulv OFR	60	368	1	368.0	0.958	353
1604 wb HOV Bulv OFR to OC OR	60	368	1	368.0	0.958	353
1604 wb HOV OC OR to Redl OFR	60	368	1	368.0	0.958	353
1604 wb HOV Redl OFR to Bulv OR	60	368	1	368.0	0.958	353
1604 wb HOV Bulv OR to Redl OR 5ln	60	171	1	171.0	0.967	165
1604 wb HOV Bulv OR to Redl OR 4ln	60	171	1	171.0	0.967	165
1604 wb HOV Red OR 281DC OFR 5ln	60	171	1	171.0	0.967	165
1604 wb HOV RedOR to 281DC OFR 4	60	171	1	171.0	0.967	165
1604 wb HOV 281D OF to 281F OFR	60	171	1	171.0	0.967	165
1604 wb HOV at US281	60	171	1	171.0	0.97	166
1604 wb HOV SOP OFR to 281DC OR	60	171	1	171.0	0.97	166
1604 wb HOV w of 281DC OR 5 ln	60	171	1	171.0	0.97	166
1604 wb HOV w of 281DC OR 4 ln	60	171	1	171.0	0.97	166
1604 wb HOV 281FROR to BlancoOFR	60	171	1	171.0	0.97	166
1604 wb HOV Blanco OFR to BP OR	60	171	1	171.0	0.97	166
1604 wb HOV BP OR to Blanco OR	60	444	1	444.0	0.97	431
1604 wb HOV Blanco OR to Rog OFR	60	444	1	444.0	0.97	431
1604 wb HOV Rog OFR to Mil OFR	60	444	1	444.0	0.97	431
1604 wb HOV Mil OFR to Rog OR	60	444	1	444.0	0.97	431
1604 wb HOV Rog OR to LS OFR	60	444	1	444.0	0.97	431
1604 wb HOV LS OFR to Mil OR	60	166	1	166.0	0.97	161
1604 wb HOV Mil OR to 10DC OFR	60	166	1	166.0	0.97	161
1604 wb HOV 10DC OFR to LS OR	60	166	1	166.0	0.97	161
1604 wb HOV LS OR to Feeder OFR	60	166	1	166.0	0.97	161
1604 wb HOV at IH10	60	166	1	166.0	0.98	163
1604 wb HOV Feeder to FR OR	60	166	1	166.0	0.98	163

Loop 1604 Design Condition 2045 PM

TNM Roadway Segment	Speed mph	PM Peak	# Lanes	DHV per lane	LD % mix	# of Auto each lane
1604 wb HOV 10DC OR to KSP OFR	60	166	1	166.0	0.98	163
1604 wb HOV KS OFR to Bab OR	60	166	1	166.0	0.98	163
1604 wb HOV Bab OR to Haus OFR	60	470	1	470.0	0.98	461
1604 wb HOV Haus OFR to Band OFR	60	470	1	470.0	0.98	461
1604 wb HOV w of Band OFR 4 ln	60	470	1	470.0	0.98	461
1604 wb HOV w of Band OFR 3 ln	60	470	1	470.0	0.98	461
1604 eb HOV at US281	60	247	1	247.0	0.97	240
1604 eb HOV FR OR to 281DC OR	60	247	1	247.0	0.967	239
1604 eb HOV 281DC OR to Red OFR	60	247	1	247.0	0.967	239
1604 eb HOV Red OFR to Bulv OFR	60	247	1	247.0	0.967	239
1604 eb HOV Bulv OFR to Red OR	60	247	1	247.0	0.958	237
1604 eb HOV Red OR to OC OFR	60	460	1	460.0	0.958	441
1604 eb HOV OC OFR to Bulv OR	60	460	1	460.0	0.958	441
1604 eb HOV Bulv OR to Jud OFR	60	460	1	460.0	0.958	441
1604 eb HOV Jud OFR to OC OR	60	460	1	460.0	0.958	441
1604 eb HOV OC OR to GMT OFR	60	460	1	460.0	0.958	441
1604 eb HOV GMT OFR to Jud OR	60	460	1	460.0	0.958	441
1604 eb HOV Jud OR to Nac OFR	60	427	1	427.0	0.958	409
1604 eb HOV Blanco OFR to Hueb OR	60	607	1	607.0	0.97	589
1604 eb HOV Hueb OR to Blanco OR	60	247	1	247.0	0.97	240
1604 eb HOV Blanco OR to 281FR OFR	60	247	1	247.0	0.97	240
1604 eb HOV 281FROFR to 281DCOF	60	247	1	247.0	0.97	240
1604 eb HOV 281DC OFR to Voight OR	60	247	1	247.0	0.97	240
1604 eb HOV at IH10	60	183	1	183.0	0.98	179
1604 eb HOV E of I10 4 ln	60	183	1	183.0	0.97	178
1604 eb HOV E of I10 3 ln	60	183	1	183.0	0.97	178
1604 eb HOV 10FR OR to 10DC OR	60	183	1	183.0	0.97	178
1604 eb HOV 10DC OR to Mil OFR	60	183	1	183.0	0.97	178
1604 eb HOV Mil OFR to Bitters OFR	60	183	1	183.0	0.97	178
1604 eb HOV Bitters OFR to Mil OR	60	607	1	607.0	0.97	589
1604 eb HOV Mil OR to Bitters OR	60	607	1	607.0	0.97	589
1604 eb HOV Bit OR to Blanco OFR	60	607	1	607.0	0.97	589
1604 eb HOV HOV start to Haus OFR	60	281	1	281.0	0.98	275
1604 eb HOV Haus OFR to Band OR	60	281	1	281.0	0.98	275
1604 eb HOV Band OR to Haus OR	60	281	1	281.0	0.98	275
1604 eb HOV Haus OR to Bab OFR	60	281	1	281.0	0.98	275
1604 eb HOV n of Haus OR 5ln	60	281	1	281.0	0.98	275
1604 eb HOV s of KSP OR	60	281	1	281.0	0.98	275
1604 eb HOV KSP OR to Bren OFR	60	183	1	183.0	0.98	179
1604 eb HOV Bren OFR to 10DC OFR	60	183	1	183.0	0.98	179
1604 eb HOV 10DC OFR to FR OFR	60	183	1	183.0	0.98	179
1604 eb HOV 10FR OFR to 1604 Feed	60	183	1	183.0	0.98	179

Loop 1604 Design Condition 2045 PM

TNM Roadway Segment	Speed mph	PM Peak	# Lanes	DHV per lane	LD % mix	# of Auto each lane
IH 10 / Frontage Roads						
I10 nb HOV	65	174	1	174.0	0.97	169
I10 sb HOV	65	360	1	360.0	0.97	349
I10 nbml s of de Zavala OR	65	7416	4	1,854.0	0.979	1,815
I10 nbml s of OFR to 1604 FR	65	9060	5	1,812.0	0.979	1,774
I10 nbml 1604 OFR to I10 DC OR	65	7242	4	1,810.5	0.979	1,772
I10 nbml I10 DC OR to FR OFR	65	4308	3	1,436.0	0.979	1,406
I10 nbml btw FR ramps at 1604	65	4027	3	1,342.3	0.979	1,314
I10 nbml FR OR to LC OFR	70	4027	3	1,342.3	0.97	1,302
I10 nbml LC OFR to I10DC OR	70	866	3	288.7	0.97	280
I10 nbml I10DC OR to CB OFR	70	1994	5	398.8	0.97	387
I10 nbml n of CB OFR 4 ln	70	1232	4	308.0	0.97	299
I10 nbml CB OFR to LC OR 3 ln	70	1232	3	410.7	0.97	398
I10 sbml FR OFR to DC OFR	65	5002	4	1,250.5	0.97	1,213
I10 sbml DC OFR to FR OFR	65	3975	3	1,325.0	0.97	1,285
I10 sbml FR OFR to HOV end	65	3147	3	1,049.0	0.97	1,018
I10 sbml HOV end to FR OR	65	3507	3	1,169.0	0.979	1,144
I10 sbml FR OR to DC OR	65	4777	3	1,592.3	0.979	1,559
I10 sbml s of DC OR	65	9201	5	1,840.2	0.979	1,802
I10 sbml s of de Zav OFR	65	7751	5	1,550.2	0.979	1,518
I10 nbfr s of UTSA	50	3567	3	1,189.0	0.974	1,158
I10 nbfr n of UTSA 3 ln	50	1114	3	371.3	0.974	362
I10 nbfr n of UTSA 2 ln	50	879	2	439.5	0.974	428
I10 nbfr n of OFR to 1604FR	50	2697	3	899.0	0.974	876
I10 nbfr 1604 wbfr to LC OFR	50	2273	2	1,136.5	0.974	1,107
I10 nbfr LC OFR to LC bp	50	5881	4	1,470.3	0.974	1,432
I10 nbfr LC bp to LC	50	2886	3	962.0	0.974	937
I10 sbfr s of LC 3ln	50	1906	3	635.3	0.974	619
I10 sbfr s of LC 2ln	50	1906	2	953.0	0.974	928
I10 sbfr OFR to 1604 wbfr	50	2664	3	888.0	0.974	865
I10 sbfr n of UTSA 3ln	50	2279	3	759.7	0.974	740
I10 sbfr n of UTSA 2ln	50	2279	2	1,139.5	0.974	1,110
I10 sbfr n of UTSA 4ln	50	2279	4	569.8	0.974	555
I10 sbfr s of UTSA	50	4235	2	2,117.5	0.974	2,062
I10 sbml n of CB OR	70	2718	3	906.0	0.97	879
I10 sbml CB OR to FR OFR	70	5760	4	1,440.0	0.97	1,397
I10 nbfr LC bp to CB OFR 3 ln	50	6742	3	2,247.3	0.974	2,189
I10 nbfr LC bp to CB OFR 4 ln	50	6742	4	1,685.5	0.974	1,642
I10 nbfr LC to CB OFR	50	2135	2	1,067.5	0.974	1,040
I10 nbfr CB OFR to LC OR	50	6627	3	2,209.0	0.974	2,152
I10 nbfr n of LC OR	50	3810	3	1,270.0	0.974	1,237
I10 sbfr n of SumOaks OR	50	4285	3	1,428.3	0.974	1,391
I10 sbfr SumOaks OR to LC	50	1243	3	414.3	0.974	404

Loop 1604 Design Condition 2045 PM TNM Roadway Segment	Speed mph	PM Peak	# Lanes	DHV per lane	LD % mix	# of Auto each lane
LP 1604 Frontage Road						
1604 ebfr w of Bandera	40	3123	3	1,041.0	0.992	1,033
1604 ebfr e of Bandera 2ln	40	3203	2	1,601.5	0.992	1,589
1604 ebfr e of Bandera to Hau OFR	40	3203	3	1,067.7	0.992	1,059
1604 ebfr Haus OFR to Band OR	40	4634	4	1,158.5	0.992	1,149
1604 ebfr Band OR to Haus	40	3062	3	1,020.7	0.992	1,013
1604 ebfr Haus to Haus OR	40	1445	3	481.7	0.992	478
1604 ebfr Haus OR to KSP	40	1007	2	503.5	0.992	499
1604 ebfr KSP to Bab OFR	40	1047	2	523.5	0.992	519
1604 ebfr Bab OFR to KSP OR	40	1776	3	592.0	0.992	587
1604 ebfr KSP OR to Babcock	40	1144	3	381.3	0.992	378
1604 ebfr Bab to Bren OFR	40	1218	3	406.0	0.992	403
1604 ebfr OFR to Brenan	40	1996	4	499.0	0.992	495
1604 ebfr Brenan to JP	40	1988	4	497.0	0.992	493
1604 ebfr JP to OFR	40	2680	3	893.3	0.992	886
1604 ebfr OFR to Feeder OR	40	2998	4	749.5	0.992	744
1604 ebfr Feeder OR to 10 ETA	40	2586	3	862.0	0.992	855
1604 ebfr 10FR ETA to VJ	40	2695	2	1,347.5	0.974	1,312
1604 ebfr VJ to Trade	40	4037	2	2,018.5	0.974	1,966
1604 ebfr Trade to LS	40	1529	2	764.5	0.974	745
1604 ebfr LS to Mil OFR	40	1903	2	951.5	0.974	927
1604 ebfr OFR to Mil	40	2400	3	800.0	0.974	779
1604 ebfr Mil to Bitters OFR	40	2836	2	1,418.0	0.974	1,381
1604 ebfr OFR to Mil OR	40	4365	3	1,455.0	0.974	1,417
1604 ebfr Mil OR to Bitters	40	2215	3	738.3	0.974	719
1604 ebfr Bitters to OR	40	2133	3	711.0	0.974	693
1604 ebfr OR to Hueb	40	1117	2	558.5	0.974	544
1604 ebfr Hueb to Blanco OFR	40	726	2	363.0	0.974	354
1604 ebfr OFR to Blanco BP	40	2200	3	733.3	0.974	714
1604 ebfr Blanco BP to Blanco	40	1540	3	513.3	0.974	500
1604 ebfr Blanco to OFR	40	1519	2	759.5	0.974	740
1604 ebfr OFR to Blanco OR	40	2590	2	1,295.0	0.974	1,261
1604 ebfr OR to Voight	40	1361	2	680.5	0.974	663
1604 ebfr Voight to 281FR OFR	40	2659	2	1,329.5	0.974	1,295
1604 ebfr OFR to Voight OR	40	4749	3	1,583.0	0.974	1,542
1604 ebfr Voight OR to 281 sbfr	40	3248	3	1,082.7	0.974	1,055
1604 ebfr 281 nbfr to OR	40	2390	3	796.7	0.966	770
1604 ebfr OR to GC	40	1773	3	591.0	0.966	571
1604 ebfr GC to Redl	40	1147	2	573.5	0.966	554
1604 ebfr Redl to Bulv OFR	40	2560	2	1,280.0	0.983	1,258
1604 ebfr Bulv OFR to Redl OR	40	4164	3	1,388.0	0.983	1,364
1604 ebfr OR to Bulv	40	3220	3	1,073.3	0.983	1,055

Loop 1604 Design Condition 2045 PM

TNM Roadway Segment	Speed mph	PM Peak	# Lanes	DHV per lane	LD % mix	# of Auto each lane
1604 ebfr Bulv to OC OFR	40	2023	2	1,011.5	0.983	994
1604 ebfr OC OFR to Bulv OR	40	2760	3	920.0	0.983	904
1604 ebfr Bulv OR to OC	40	1306	3	435.3	0.983	428
1604 ebfr OC to Jud OFR	40	687	2	343.5	0.983	338
1604 ebfr Jud OFR to OC OR	40	1724	3	574.7	0.983	565
1604 ebfr OC OR to Jud	40	1321	3	440.3	0.983	433
1604 ebfr Jud to GMT OFR	40	767	2	383.5	0.983	377
1604 ebfr GMT OFR to Jud OR	40	1083	3	361.0	0.983	355
1604 ebfr Jud OR to GMT	40	532	3	177.3	0.983	174
1604 ebfr btw RR TAs	40	2044	2	1,022.0	0.983	1,005
1604 RR TA EB	40	300	1	300.0	0.983	295
1604 ebfr RR TA to Nac	40	2344	3	781.3	0.983	768
1604 ebfr Nac to OR	40	3096	2	1,548.0	0.988	1,529
1604 ebfr Nac OR to LO OFR	40	2884	2	1,442.0	0.988	1,425
1604 ebfr LO OFR to WRRTA	40	893	2	446.5	0.988	441
1604 ebfr WRRTA to ERRTA	40	759	2	379.5	0.988	375
1604 ebfr LO OFR to LO	40	973	2	486.5	0.988	481
1604 RR TA1W EB	40	134	2	67.0	0.988	66
1604 RR TA1E EB	40	214	1	214.0	0.988	211
1604 ebfr LO OR to RBP OFR	40	595	2	297.5	0.988	294
1604 ebfr OFR to I35DC OR	40	667	2	333.5	0.988	329
1604 ebfr I35DC OR to RBP	40	220	2	110.0	0.988	109
1604 wbfr GW to I35DC OFR	40	853	2	426.5	0.988	421
1604 wbfr OFR to LO OFR	40	1534	2	767.0	0.988	758
1604 wbfr OFR to LO	40	2289	3	763.0	0.988	754
1604 wbfr LO to WRRTA1	40	1381	2	690.5	0.988	682
1604 RR TA1E WB	40	234	2	117.0	0.988	116
1604 RR TA1W WB	40	134	2	67.0	0.988	66
1604 wbfr WRRTA2 to Nac OFR	40	623	3	207.7	0.988	205
1604 wbfr WRRTA1 to WRRTA2	40	1147	2	573.5	0.988	567
1604 wbfr Nac OFR to Nac	40	2396	4	599.0	0.988	592
1604 wbfr Nac to OR	40	1535	2	767.5	0.983	754
1604 wbfr OR to E TA	40	469	2	234.5	0.983	231
1604 wbfr at TA	40	169	2	84.5	0.983	83
1604 RR TA WB	40	185	1	185.0	0.983	182
1604 wbfr GMT to Jud OFR	40	527	2	263.5	0.983	259
1604 wbfr Jud OFR to GMT OR	40	1064	3	354.7	0.983	349
1604 wbfr GMT OR to Jud	40	597	3	199.0	0.983	196
1604 wbfr Jud to OC OFR	40	882	2	441.0	0.983	434
1604 wbfr OC OFR to Jud OR	40	1317	3	439.0	0.983	432
1604 wbfr Jud OR to OC	40	508	3	169.3	0.983	166
1604 wbfr OC to Bulv OFR	40	1122	2	561.0	0.983	551
1604 wbfr Bulv OFR to OC OR	40	2763	3	921.0	0.983	905

Loop 1604 Design Condition 2045 PM

TNM Roadway Segment	Speed mph	PM Peak	# Lanes	DHV per lane	LD % mix	# of Auto each lane
1604 wbfr OC OR to Bulv	40	2156	3	718.7	0.983	706
1604 wbfr Bulv to Redl OFR	40	2336	2	1,168.0	0.983	1,148
1604 wbfr Redl OFR to Bulv OR	40	3220	3	1,073.3	0.983	1,055
1604 wbfr Bulv OR to Redl	40	1773	3	591.0	0.983	581
1604 wbfr Redl to OR	40	1912	3	637.3	0.966	616
1604 wbfr OR to CBC	40	615	2	307.5	0.966	297
1604 wbfr CBC to 281 nbfr OFR	40	1053	2	526.5	0.966	509
1604 wbfr OFR to 281 nbfr	40	1681	3	560.3	0.966	541
1604 wbfr 281 sbfr to 281FR OR	40	2640	2	1,320.0	0.974	1,286
1604 wbfr OR to SOP	40	2356	3	785.3	0.974	765
1604 wbfr SOP to OFR	40	1727	2	863.5	0.974	841
1604 wbfr OFR to SOP OR	40	3166	3	1,055.3	0.974	1,028
1604 wbfr OR to Blanco	40	1870	2	935.0	0.974	911
1604 wbfr Blanco to OFR	40	836	2	418.0	0.974	407
1604 wbfr OFR to Blanco OR	40	1502	3	500.7	0.974	488
1604 wbfr Blanco OR to Hueb	40	840	2	420.0	0.974	409
1604 wbfr Hueb to OFR	40	863	2	431.5	0.974	420
1604 wbfr OFR to RogR	40	1724	3	574.7	0.974	560
1604 wbfr RogR to Mil OFR	40	1739	2	869.5	0.974	847
1604 wbfr Mil OFR to RogR OR	40	3343	3	1,114.3	0.974	1,085
1604 wbfr Rog OR to Mil	40	2248	3	749.3	0.974	730
1604 wbfr Mil to OR	40	2852	2	1,426.0	0.974	1,389
1604 wbfr Mil OR to LS OFR	40	752	2	376.0	0.974	366
1604 wbfr LS OFR to LS	40	2595	3	865.0	0.974	843
1604 wbfr LS to OR	40	3780	2	1,890.0	0.974	1,841
1604 wbfr OR to Trade	40	2661	2	1,330.5	0.974	1,296
1604 wbfr Trade to VJ	40	2661	2	1,330.5	0.974	1,296
1604 wbfr VJ to Feeder OR	40	1857	2	928.5	0.974	904
1604 wbfr Feeder to 10 ETA	40	1129	2	564.5	0.974	550
1604 wbfr 10 WTA to Feeder OFR	40	2253	2	1,126.5	0.992	1,117
1604 wbfr Feeder OFR to FR OR	40	4344	4	1,086.0	0.992	1,077
1604 wbfr FR OR to LC Bypass	40	3009	3	1,003.0	0.992	995
1604 wbfr LC Bypass to LC	40	1504	3	501.3	0.992	497
1604 wbfr LC to CH	40	1474	3	491.3	0.992	487
1604 wbfr w of Brennan	40	1748	2	874.0	0.992	867
1604 wbfr e of Babcock	40	3253	3	1,084.3	0.992	1,076
1604 wbfr Babcock to KSP OFR	40	3754	2	1,877.0	0.992	1,862
1604 wbfr KSP OFR to Bab OR	40	4393	3	1,464.3	0.992	1,453
1604 wbfr Bab OR to KSP	40	2710	3	903.3	0.992	896
1604 wbfr KSP to Haus OFR	40	1984	2	992.0	0.992	984
1604 wbfr Haus OFR to Haus	40	2534	3	844.7	0.992	838
1604 wbfr Haus to Bandera OFR	40	4410	2	2,205.0	0.992	2,187
1604 wbfr Bandera OFR to Haus OR	40	5679	4	1,419.8	0.992	1,408

Loop 1604 Design Condition 2045 PM

TNM Roadway Segment	Speed mph	PM Peak	# Lanes	DHV per lane	LD % mix	# of Auto each lane
1604 wbfr Haus OR to Bandera	40	3692	4	923.0	0.992	916
1604 wbfr Bandera to OFR	40	3594	2	1,797.0	0.992	1,783
Ramps						
EB 1604 Braun OR	45	964	1	964.0	0.98	945
EB Hausman OFR	45	1240	1	1,240.0	0.98	1,215
EB 1604 Bandera OR	45	1572	1	1,572.0	0.98	1,541
EB Hausman OR	45	438	1	438.0	0.98	429
EB Babcock OFR	45	729	2	364.5	0.98	357
EB KSP OR	45	632	1	632.0	0.98	619
EB Brenan OFR	45	778	1	778.0	0.98	762
EB 10DC OFR	40	2616	2	1,308.0	0.98	1,282
EB 10FR OFR	45	318	1	318.0	0.98	312
EB Feeder OFR	45	641	1	641.0	0.98	628
EB Feeder OR	45	1304	1	1,304.0	0.97	1,265
EB VJ OR	45	2751	1	2,751.0	0.97	2,668
EB 10DC OR	40	2105	2	1,052.5	0.97	1,021
EB Mil OFR	45	497	1	497.0	0.97	482
EB Bitters OFR	45	1236	1	1,236.0	0.97	1,199
EB Mil OR	45	2150	1	2,150.0	0.97	2,086
EB Bitters OR	45	1016	1	1,016.0	0.97	986
EB Blanco BP OFR	45	2433	2	1,216.5	0.97	1,180
EB Blanco BP OFR to FR	45	1474	1	1,474.0	0.97	1,430
EB Blanco BP OR from FR	45	744	1	744.0	0.97	722
EB Blanco BP1	45	959	1	959.0	0.97	930
EB Blanco BP	45	1703	2	851.5	0.97	826
EB BP OR	45	632	1	632.0	0.97	613
EB BP OFR to FR	45	1071	1	1,071.0	0.97	1,039
EB Blanco OR	45	1478	1	1,478.0	0.97	1,434
EB 281FR OFR	45	1511	1	1,511.0	0.97	1,466
EB 281DC OFR	40	2570	2	1,285.0	0.97	1,246
EB Voight OR	45	1501	1	1,501.0	0.97	1,456
EB 281FR OR	45	303	1	303.0	0.967	293
SBEB 281DC OR	40	952	1	952.0	0.967	921
NBEB 281DC OR	40	1938	1	1,938.0	0.967	1,874
EB 281DC OR	40	2890	1	2,890.0	0.967	2,795
EB Redl OFR	45	1804	1	1,804.0	0.967	1,744
EB Bulv OFR	45	1604	2	802.0	0.958	768
EB Redl OR	45	944	1	944.0	0.958	904
EB OC OFR	45	737	1	737.0	0.958	706
EB Bulv OR	45	1454	1	1,454.0	0.958	1,393
EB Jud OFR	45	1037	1	1,037.0	0.958	993
EB OC OR	45	403	1	403.0	0.958	386

Loop 1604 Design Condition 2045 PM

TNM Roadway Segment	Speed mph	PM Peak	# Lanes	DHV per lane	LD % mix	# of Auto each lane
EB GMT OFR	45	316	1	316.0	0.958	303
EB Jud OR	45	601	1	601.0	0.958	576
EB LO OFR	45	541	1	541.0	0.976	528
EB Nac OR	45	2532	1	2,532.0	0.976	2,471
EB RB OFR	45	72	1	72.0	0.976	70
EB LO OR	45	969	1	969.0	0.976	946
EB I35DC OFR	40	1687	2	843.5	0.976	823
EB I35DC OR from FR	40	447	1	447.0	0.955	427
EB I35DC	40	1687	2	843.5	0.955	806
WB I35DC OR	40	1717	1	1,717.0	0.955	1,640
WB I35DC OFR	40	681	1	681.0	0.955	650
WB LO OFR	45	755	1	755.0	0.976	737
WB Nac OFR	45	1773	1	1,773.0	0.976	1,730
WB Nac OR	45	1066	1	1,066.0	0.958	1,021
WB RR FR OR	45	658	1	658.0	0.958	630
WB Jud OFR	45	392	1	392.0	0.958	376
WB GMT OR	45	467	1	467.0	0.958	447
WB OC OFR	45	435	1	435.0	0.958	417
WB Jud OR	45	809	1	809.0	0.958	775
WB Bulv OFR	45	1641	1	1,641.0	0.958	1,572
WB OC OR	45	607	1	607.0	0.958	582
WB Redl OFR	45	1103	1	1,103.0	0.958	1,057
WB Bulv OR	45	1544	1	1,544.0	0.958	1,479
WB Redl OR	45	1297	1	1,297.0	0.967	1,254
WB 281DC OFR	40	2343	2	1,171.5	0.967	1,133
WB 281FR OFR	45	628	1	628.0	0.967	607
NBWB 281DC	40	4261	2	2,130.5	0.97	2,067
WB SOP OFR	45	1366	1	1,366.0	0.97	1,325
WB 281DC OR	40	2895	2	1,447.5	0.97	1,404
WB 281FR OR	45	2040	1	2,040.0	0.97	1,979
WB Blanco OFR	45	2435	2	1,217.5	0.97	1,181
WB BP OFR to FR	45	1804	1	1,804.0	0.97	1,750
WB BP OR from FR	45	1296	1	1,296.0	0.97	1,257
WB BP 1	45	631	1	631.0	0.97	612
WB Blanco BP	45	1927	2	963.5	0.97	935
WB BP2 OFR to FR	45	943	1	943.0	0.97	915
WB BP OR	45	984	1	984.0	0.97	954
WB Blanco OR	45	662	1	662.0	0.97	642
WB Rog OFR	45	861	1	861.0	0.97	835
WB Mil OFR	45	1604	1	1,604.0	0.97	1,556
WB Rog OR	45	643	1	643.0	0.97	624
WB LS OFR	45	1655	1	1,655.0	0.97	1,605
WB Mil OR	45	2100	1	2,100.0	0.97	2,037

Loop 1604 Design Condition 2045 PM

TNM Roadway Segment	Speed mph	PM Peak	# Lanes	DHV per lane	LD % mix	# of Auto each lane
WB 10DC OFR	40	3786	2	1,893.0	0.97	1,836
WB LS OR	45	1119	1	1,119.0	0.97	1,085
WB Feeder OFR	45	1363	1	1,363.0	0.97	1,322
WB Feeder OR from FR	45	728	1	728.0	0.98	713
WB LC Bypass	40	1505	1	1,505.0	0.98	1,475
WB Feeder OFR to FR	45	2238	2	1,119.0	0.98	1,097
WB 10FR OR	45	1335	1	1,335.0	0.98	1,308
WB 10DC OR 2 ln	40	1856	2	928.0	0.98	909
WB 10DC OR 3 ln	40	1856	3	618.7	0.98	606
WB KSP OFR	45	639	2	319.5	0.98	313
WB Babcock OR	45	1683	1	1,683.0	0.98	1,649
WB Haus OFR	45	550	1	550.0	0.98	539
WB Bandera OFR	45	1269	2	634.5	0.98	622
WB Haus OR	45	1860	1	1,860.0	0.98	1,823
WB Braun OFR	45	1838	1	1,838.0	0.98	1,801
10NB FR OFR	45	1818	1	1,818.0	0.979	1,780
10NB 1604FR OFR	45	107	1	107.0	0.979	105
10NB DC OFR	40	2934	2	1,467.0	0.979	1,436
10SB DCES	40	2391	2	1,195.5	0.979	1,170
10SB DCES1	40	4424	3	1,474.7	0.979	1,444
10SB DCES2	40	4424	2	2,212.0	0.979	2,166
10NB DCNE	40	1331	1	1,331.0	0.979	1,303
10SB OR from sbfr	45	1326	1	1,326.0	0.979	1,298
10SB OFR to FR	45	884	1	884.0	0.97	857
10NB DC OR	40	1128	3	376.0	0.97	365
10NB DC OR 2	40	1978	2	989.0	0.97	959
DC Ramp to NBFR 2ln	45	850	2	425.0	0.97	412
DC Ramp to NBFR 1ln	45	850	1	850.0	0.97	825
LC Bypass Ramp from FR	45	2995	1	2,995.0	0.97	2,905
10NB de Zavala OR	45	1644	1	1,644.0	0.97	1,595
10NB LC OFR	45	3161	2	1,580.5	0.97	1,533
10SB 1604FR OFR	45	758	1	758.0	0.97	735
10SB DC OFR	40	1027	2	513.5	0.97	498
10SB de Zavala OFR	45	1450	1	1,450.0	0.97	1,407
LC ETA	25	442	1	442.0	0.992	438
LC WTA	25	23	1	23.0	0.992	23
Brenan ETA	25	66	1	66.0	0.992	65
Brenan WTA	25	166	1	166.0	0.992	165
Babcock ETA	25	88	1	88.0	0.992	87
Babcock WTA	25	184	1	184.0	0.992	183
1560 ETA	25	33	1	33.0	0.992	33
1560 WTA	25	688	1	688.0	0.992	682
Bandera ETA	25	982	1	982.0	0.992	974

Loop 1604 Design Condition 2045 PM

TNM Roadway Segment	Speed mph	PM Peak	# Lanes	DHV per lane	LD % mix	# of Auto each lane
Bandera WTA	25	587	1	587.0	0.992	582
KSP ETA	25	115	1	115.0	0.992	114
KSP WTA	25	33	1	33.0	0.992	33
LS ETA	25	292	1	292.0	0.974	284
LS WTA	25	623	1	623.0	0.974	607
Mil ETA	25	299	1	299.0	0.974	291
Mil WTA	25	327	1	327.0	0.974	318
Blanco ETA	25	284	1	284.0	0.974	277
Blanco WTA	25	302	1	302.0	0.974	294
SO ETA	25	1011	1	1,011.0	0.974	985
SO WTA	25	359	1	359.0	0.974	350
GC WTA	25	499	1	499.0	0.967	483
GC ETA	25	108	1	108.0	0.967	104
Redl ETA	25	283	1	283.0	0.967	274
Redl WTA	25	249	1	249.0	0.967	241
Bulv ETA	25	190	1	190.0	0.983	187
Bulv WTA	25	513	1	513.0	0.983	504
OC ETA	25	49	1	49.0	0.983	48
OC WTA	25	106	1	106.0	0.983	104
Jud ETA	25	168	1	168.0	0.983	165
Jud WTA	25	142	1	142.0	0.983	140
Nac ETA	25	217	1	217.0	0.983	213
Nac WTA	25	292	1	292.0	0.983	287
Hueb ETA	25	93	1	93.0	0.974	91
Hueb WTA	25	88	1	88.0	0.974	86
Bitters ETA	25	264	1	264.0	0.974	257
Bitters WTA	25	392	1	392.0	0.974	382
10NB CB OFR	45	762	1	762.0	0.97	739
10NB LC OR	45	2817	1	2,817.0	0.97	2,732
10SB SO OR	45	3042	1	3,042.0	0.97	2,951
LC STA	25	288	1	288.0	0.974	281
LC NTA	25	391	1	391.0	0.974	381
LO ETA	25	627	1	627.0	0.988	619
LO WTA	25	36	1	36.0	0.988	36
GMT ETA	25	80	1	80.0	0.988	79
GMT WTA	25	110	1	110.0	0.988	109
VJ ETA	25	272	1	272.0	0.988	269
Cross Streets						
SB Bandera n of 1604	45	2724	3	908.0	0.992	901
SB Bandera s of 1604	45	2814	3	938.0	0.992	930
SB Bandera at 1604	45	2061	3	687.0	0.992	682
NB Bandera n of 1604	45	3076	3	1,025.3	0.992	1,017
NB Bandera s of 1604	45	3148	4	787.0	0.992	781

Loop 1604 Design Condition 2045 PM

TNM Roadway Segment	Speed mph	PM Peak	# Lanes	DHV per lane	LD % mix	# of Auto each lane
NB Bandera at 1604	45	2482	4	620.5	0.992	616
SB 1560 n of 1604	45	1051	3	350.3	0.992	348
SB Hausman s of 1604	45	1388	2	694.0	0.992	688
SB Hausman at 1604	45	777	3	259.0	0.992	257
NB 1560 n of 1604	45	1841	2	920.5	0.992	913
NB Hausman s of 1604	45	2437	3	812.3	0.992	806
NB Hausman at 1604	45	2788	3	929.3	0.992	922
SB Babcock n of 1604	40	754	1	754.0	0.992	748
SB Babcock n of 1604 2 ln	40	754	2	377.0	0.992	374
SB Babcock s of 1604	40	902	1	902.0	0.992	895
SB Babcock at 1604	40	903	2	451.5	0.992	448
NB Babcock n of 1604	40	958	2	479.0	0.992	475
NB Babcock s of 1604	40	1408	2	704.0	0.992	698
NB Babcock at 1604	40	1512	2	756.0	0.992	750
SB CH n of 1604	30	558	1	558.0	0.992	554
SB Brennan s of 1604	20	413	2	206.5	0.992	205
SB Brennan at 1604	30	476	2	238.0	0.992	236
NB CH n of 1604	30	409	1	409.0	0.992	406
NB Brennan s of 1604	20	773	2	386.5	0.992	383
NB Brennan at 1604	30	744	2	372.0	0.992	369
SB LC n of 1604	40	1530	2	765.0	0.992	759
SB JP s of 1604	20	701	2	350.5	0.992	348
SB LC at 1604	40	1111	3	370.3	0.992	367
NB LC n of 1604	40	1151	2	575.5	0.992	571
NB JP s of 1604	20	984	3	328.0	0.992	325
NB LC at 1604	40	1121	3	373.7	0.992	371
SB VJ n of 1604	40	1328	2	664.0	0.974	647
SB VJ at 1604	40	1358	2	679.0	0.974	661
SB VJ s of 1604	40	872	2	436.0	0.974	425
NB VJ s of 1604	40	1358	2	679.0	0.974	661
NB VJ at 1604	40	927	2	463.5	0.974	451
NB VJ n of 1604	40	1429	2	714.5	0.974	696
SB LS at 1604	35	216	2	108.0	0.974	105
SB LS s of 1604	35	713	2	356.5	0.974	347
NB LS s o 1604	35	1631	2	815.5	0.974	794
NB LS at 1604	35	1070	2	535.0	0.974	521

Loop 1604 Design Condition 2045 PM

TNM Roadway Segment	Speed mph	PM Peak	# Lanes	DHV per lane	LD % mix	# of Auto each lane
SB Mil n of 1604	45	1106	2	553.0	0.974	539
SB Mil at 1604	45	1103	2	551.5	0.974	537
SB Mil s of 1604	45	1128	2	564.0	0.974	549
NB Mil s of 1604	45	1976	2	988.0	0.974	962
NB Mil at 1604	45	1487	2	743.5	0.974	724
NB Mil n of 1604	45	914	2	457.0	0.974	445
SB Rog n of 1604	30	898	1	898.0	0.974	875
SB Bit at 1604	30	983	1	983.0	0.974	957
SB Bit s of 1604	30	1017	1	1,017.0	0.974	991
NB Bit s of 1604	30	1274	1	1,274.0	0.974	1,241
NB Bit at 1604	30	1194	1	1,194.0	0.974	1,163
NB Rog n of 1604	30	1222	1	1,222.0	0.974	1,190
SB Hueb n of 1604	40	973	2	486.5	0.974	474
SB Hueb at 1604	40	781	2	390.5	0.974	380
SB Hueb s of 1604	40	768	2	384.0	0.974	374
NB Hueb s of 1604	40	1327	2	663.5	0.974	646
NB Hueb at 1604	40	1736	2	868.0	0.974	845
NB Hueb n of 1604	40	1900	2	950.0	0.974	925
SB Blanco n of 1604	45	1671	3	557.0	0.974	543
SB Blanco at 1604	45	2107	2	1,053.5	0.974	1,026
SB Blanco s of 1604	45	1576	2	788.0	0.974	768
NB Blanco s of 1604	45	1850	3	616.7	0.974	601
NB Blanco at 1604	45	2384	2	1,192.0	0.974	1,161
NB Blanco n of 1604	45	3000	2	1,500.0	0.974	1,461
SB SO n of 1604	40	1924	2	962.0	0.974	937
SB SO at 1604	40	1352	2	676.0	0.974	658
SB Voight s of 1604	25	335	1	335.0	0.974	326
NB Voight s of 1604	25	332	2	166.0	0.974	162
NB SO at 1604	40	703	2	351.5	0.974	342
NB SO n of 1604	40	1252	2	626.0	0.974	610
SB CBC n of 1604	25	146	2	73.0	0.966	71
SB GC at 1604	30	433	2	216.5	0.966	209
SB GC s of 1604	30	966	2	483.0	0.966	467
NB GC s of 1604	30	735	2	367.5	0.966	355
NB GC at 1604	30	437	2	218.5	0.966	211
NB CBC n of 1604	25	103	1	103.0	0.966	99
SB Red n of 1604	40	1213	2	606.5	0.966	586

Loop 1604 Design Condition 2045 PM

TNM Roadway Segment	Speed mph	PM Peak	# Lanes	DHV per lane	LD % mix	# of Auto each lane
SB Red at 1604	40	904	2	452.0	0.966	437
SB Red s of 1604	40	1061	1	1,061.0	0.966	1,025
NB Red s of 1604	40	668	1	668.0	0.966	645
NB Red at 1604	40	936	2	468.0	0.966	452
NB Red n of 1604	40	1072	2	536.0	0.966	518
SB Jud n of 1604	40	359	2	179.5	0.983	176
SB Jud at 1604	40	561	2	280.5	0.983	276
SB Jud s of 1604	40	1370	2	685.0	0.983	673
NB Jud s of 1604	40	861	2	430.5	0.983	423
NB Jud at 1604	40	632	2	316.0	0.983	311
NB Jud n of 1604	40	119	2	59.5	0.983	58
SB Bulv n of 1604	45	2718	2	1,359.0	0.983	1,336
SB Bulv at 1604	40	1749	2	874.5	0.983	860
SB Bulv s of 1604	40	1618	2	809.0	0.983	795
NB Bulv s of 1604	40	2113	2	1,056.5	0.983	1,039
NB Bulv at 1604	40	3118	2	1,559.0	0.983	1,532
NB Bulv n of 1604	45	4230	2	2,115.0	0.983	2,079
SB OC at 1604	40	303	2	151.5	0.983	149
SB OC s of 1604	40	1229	2	614.5	0.983	604
NB OC s of 1604	40	1222	2	611.0	0.983	601
NB OC at 1604	40	858	2	429.0	0.983	422
SB Nac n of 1604	45	1877	3	625.7	0.983	615
SB Nac at 1604	45	2512	3	837.3	0.983	823
SB Nac s of 1604	45	1960	2	980.0	0.983	963
NB Nac s of 1604	45	2161	2	1,080.5	0.983	1,062
NB Nac at 1604	45	1886	3	628.7	0.983	618
NB Nac n of 1604	45	2187	2	1,093.5	0.983	1,075
SB GMT n of 1604	40	856	1	856.0	0.983	841
SB GMT at 1604	40	685	2	342.5	0.983	337
SB GMT s of 1604	40	309	1	309.0	0.983	304
NB GMT s of 1604	40	649	1	649.0	0.983	638
NB GMT at 1604	40	510	2	255.0	0.983	251
NB GMT n of 1604	40	1165	1	1,165.0	0.983	1,145

MD % mix	# of Medium Truck each lane	HD % mix	# of Heavy Truck each lane
0.011	21	0.009	17
0.011	11	0.009	9
0.011	11	0.009	9
0.011	10	0.009	8
0.011	9	0.009	7
0.011	11	0.009	9
0.011	10	0.009	8
0.011	10	0.009	8
0.011	13	0.009	10
0.011	12	0.009	10
0.011	10	0.009	8
0.011	7	0.009	6
0.011	6	0.009	5
0.011	4	0.009	3
0.009	5	0.021	12
0.009	7	0.021	16
0.009	15	0.021	35
0.009	13	0.021	30
0.009	15	0.021	35
0.009	11	0.021	26
0.009	16	0.021	37
0.009	15	0.021	34
0.009	13	0.021	30
0.009	15	0.021	35
0.009	15	0.021	34
0.009	15	0.021	35
0.009	12	0.021	29
0.009	17	0.021	39
0.009	13	0.024	35
0.009	16	0.024	42
0.009	13	0.024	33
0.012	16	0.03	40
0.012	15	0.03	37
0.012	16	0.03	40
0.012	16	0.03	41
0.012	17	0.03	43
0.012	15	0.03	37
0.012	18	0.03	44
0.012	16	0.03	39
0.012	16	0.03	41
0.007	9	0.017	21
0.007	13	0.017	32

MD % mix	# of Medium Truck each lane	HD % mix	# of Heavy Truck each lane
0.007	13	0.017	32
0.007	12	0.017	30
0.013	22	0.032	55
0.013	22	0.032	53
0.007	14	0.017	34
0.007	10	0.017	25
0.007	9	0.017	22
0.007	11	0.017	27
0.007	8	0.017	20
0.012	16	0.03	40
0.012	15	0.03	38
0.012	17	0.03	42
0.012	16	0.03	39
0.012	14	0.03	34
0.012	16	0.03	40
0.012	15	0.03	37
0.012	13	0.03	34
0.012	12	0.03	30
0.012	12	0.03	30
0.009	10	0.024	27
0.009	13	0.024	34
0.009	13	0.024	34
0.009	16	0.024	42
0.009	14	0.024	37
0.009	12	0.021	28
0.009	10	0.021	22
0.009	11	0.021	26
0.009	14	0.021	32
0.009	15	0.021	34
0.009	13	0.021	30
0.009	14	0.021	34
0.009	13	0.021	30
0.009	14	0.021	33
0.009	10	0.021	24
0.009	9	0.021	22
0.009	9	0.021	20
0.009	11	0.021	25
0.009	7	0.021	15
0.009	7	0.021	17
0.011	7	0.009	6
0.011	7	0.009	6
0.011	11	0.009	9
0.011	12	0.009	10

MD % mix	# of Medium Truck each lane	HD % mix	# of Heavy Truck each lane
0.011	13	0.009	11
0.011	12	0.009	10
0.011	11	0.009	9
0.011	15	0.009	12
0.011	17	0.009	14
0.011	18	0.009	14
0.011	17	0.009	14
0.011	25	0.009	20
0.012	5	0.03	13
0.007	3	0.017	7
0.007	3	0.017	7
0.012	5	0.03	13
0.012	5	0.03	13
0.012	5	0.03	13
0.012	5	0.03	13
0.012	4	0.03	11
0.012	4	0.03	11
0.012	4	0.03	11
0.012	4	0.03	11
0.012	4	0.03	11
0.012	4	0.03	11
0.009	2	0.024	4
0.009	2	0.024	4
0.009	2	0.024	4
0.009	2	0.024	4
0.009	2	0.024	4
0.009	2	0.021	4
0.009	2	0.021	4
0.009	2	0.021	4
0.009	2	0.021	4
0.009	2	0.021	4
0.009	2	0.021	4
0.009	4	0.021	9
0.009	4	0.021	9
0.009	4	0.021	9
0.009	4	0.021	9
0.009	4	0.021	9
0.009	1	0.021	3
0.009	1	0.021	3
0.009	1	0.021	3
0.009	1	0.021	3
0.011	2	0.009	1
0.011	2	0.009	1

MD % mix	# of Medium Truck each lane	HD % mix	# of Heavy Truck each lane
0.011	2	0.009	1
0.011	2	0.009	1
0.011	5	0.009	4
0.011	5	0.009	4
0.011	5	0.009	4
0.011	5	0.009	4
0.009	2	0.021	5
0.009	2	0.024	6
0.009	2	0.024	6
0.009	2	0.024	6
0.012	3	0.03	7
0.012	6	0.03	14
0.012	6	0.03	14
0.012	6	0.03	14
0.012	6	0.03	14
0.012	6	0.03	14
0.012	6	0.03	14
0.012	5	0.03	13
0.009	5	0.021	13
0.009	2	0.021	5
0.009	2	0.021	5
0.009	2	0.021	5
0.009	2	0.021	5
0.011	2	0.009	2
0.009	2	0.021	4
0.009	2	0.021	4
0.009	2	0.021	4
0.009	2	0.021	4
0.009	2	0.021	4
0.009	5	0.021	13
0.009	5	0.021	13
0.009	5	0.021	13
0.011	3	0.009	3
0.011	3	0.009	3
0.011	3	0.009	3
0.011	3	0.009	3
0.011	3	0.009	3
0.011	3	0.009	3
0.011	2	0.009	2
0.011	2	0.009	2
0.011	2	0.009	2
0.011	2	0.009	2

MD % mix	# of Medium Truck each lane	HD % mix	# of Heavy Truck each lane
0.007	1	0.023	4
0.007	3	0.023	8
0.008	15	0.013	24
0.008	14	0.013	24
0.008	14	0.013	24
0.008	11	0.013	19
0.008	11	0.013	17
0.007	9	0.023	31
0.007	2	0.023	7
0.007	3	0.023	9
0.007	2	0.023	7
0.007	3	0.023	9
0.007	9	0.023	29
0.007	9	0.023	30
0.007	7	0.023	24
0.008	9	0.013	15
0.008	13	0.013	21
0.008	15	0.013	24
0.008	12	0.013	20
0.016	19	0.01	12
0.016	6	0.01	4
0.016	7	0.01	4
0.016	14	0.01	9
0.016	18	0.01	11
0.016	24	0.01	15
0.016	15	0.01	10
0.016	10	0.01	6
0.016	15	0.01	10
0.016	14	0.01	9
0.016	12	0.01	8
0.016	18	0.01	11
0.016	9	0.01	6
0.016	34	0.01	21
0.007	6	0.023	21
0.007	10	0.023	33
0.016	36	0.01	22
0.016	27	0.01	17
0.016	17	0.01	11
0.016	35	0.01	22
0.016	20	0.01	13
0.016	23	0.01	14
0.016	7	0.01	4

MD % mix	# of Medium Truck each lane	HD % mix	# of Heavy Truck each lane
0.005	5	0.003	3
0.005	8	0.003	5
0.005	5	0.003	3
0.005	6	0.003	3
0.005	5	0.003	3
0.005	2	0.003	1
0.005	3	0.003	2
0.005	3	0.003	2
0.005	3	0.003	2
0.005	2	0.003	1
0.005	2	0.003	1
0.005	2	0.003	1
0.005	2	0.003	1
0.005	4	0.003	3
0.005	4	0.003	2
0.005	4	0.003	3
0.008	11	0.018	24
0.008	16	0.018	36
0.008	6	0.018	14
0.008	8	0.018	17
0.008	6	0.018	14
0.008	11	0.018	26
0.008	12	0.018	26
0.008	6	0.018	13
0.008	6	0.018	13
0.008	4	0.018	10
0.008	3	0.018	7
0.008	6	0.018	13
0.008	4	0.018	9
0.008	6	0.018	14
0.008	10	0.018	23
0.008	5	0.018	12
0.008	11	0.018	24
0.008	13	0.018	28
0.008	9	0.018	19
0.01	8	0.024	19
0.01	6	0.024	14
0.01	6	0.024	14
0.005	6	0.012	15
0.005	7	0.012	17
0.005	5	0.012	13

MD % mix	# of Medium Truck each lane	HD % mix	# of Heavy Truck each lane
0.005	5	0.012	12
0.005	5	0.012	11
0.005	2	0.012	5
0.005	2	0.012	4
0.005	3	0.012	7
0.005	2	0.012	5
0.005	2	0.012	5
0.005	2	0.012	4
0.005	1	0.012	2
0.005	5	0.012	12
0.005	2	0.012	4
0.005	4	0.012	9
0.004	6	0.008	12
0.004	6	0.008	12
0.004	2	0.008	4
0.004	2	0.008	3
0.004	2	0.008	4
0.004	0	0.008	1
0.004	1	0.008	2
0.004	1	0.008	2
0.004	1	0.008	3
0.004	0	0.008	1
0.004	2	0.008	3
0.004	3	0.008	6
0.004	3	0.008	6
0.004	3	0.008	6
0.004	0	0.008	1
0.004	0	0.008	1
0.004	1	0.008	2
0.004	2	0.008	5
0.004	2	0.008	5
0.005	4	0.012	9
0.005	1	0.012	3
0.005	0	0.012	1
0.005	1	0.012	2
0.005	1	0.012	3
0.005	2	0.012	4
0.005	1	0.012	2
0.005	2	0.012	5
0.005	2	0.012	5
0.005	1	0.012	2
0.005	3	0.012	7
0.005	5	0.012	11

MD % mix	# of Medium Truck each lane	HD % mix	# of Heavy Truck each lane
0.005	4	0.012	9
0.005	6	0.012	14
0.005	5	0.012	13
0.005	3	0.012	7
0.01	6	0.024	15
0.01	3	0.024	7
0.01	5	0.024	13
0.01	6	0.024	13
0.008	11	0.018	24
0.008	6	0.018	14
0.008	7	0.018	16
0.008	8	0.018	19
0.008	7	0.018	17
0.008	3	0.018	8
0.008	4	0.018	9
0.008	3	0.018	8
0.008	3	0.018	8
0.008	5	0.018	10
0.008	7	0.018	16
0.008	9	0.018	20
0.008	6	0.018	13
0.008	11	0.018	26
0.008	3	0.018	7
0.008	7	0.018	16
0.008	15	0.018	34
0.008	11	0.018	24
0.008	11	0.018	24
0.008	7	0.018	17
0.008	5	0.018	10
0.005	6	0.003	3
0.005	5	0.003	3
0.005	5	0.003	3
0.005	3	0.003	2
0.005	2	0.003	1
0.005	4	0.003	3
0.005	5	0.003	3
0.005	9	0.003	6
0.005	7	0.003	4
0.005	5	0.003	3
0.005	5	0.003	3
0.005	4	0.003	3
0.005	11	0.003	7
0.005	7	0.003	4

MD % mix	# of Medium Truck each lane	HD % mix	# of Heavy Truck each lane
0.005	5	0.003	3
0.005	9	0.003	5
0.011	11	0.009	9
0.011	14	0.009	11
0.011	17	0.009	14
0.011	5	0.009	4
0.011	4	0.009	3
0.011	7	0.009	6
0.011	9	0.009	7
0.011	14	0.009	12
0.011	3	0.009	3
0.011	7	0.009	6
0.009	12	0.021	27
0.009	25	0.021	58
0.009	9	0.021	22
0.009	4	0.021	10
0.009	11	0.021	26
0.009	19	0.021	45
0.009	9	0.021	21
0.009	11	0.021	26
0.009	13	0.021	31
0.009	7	0.021	16
0.009	9	0.021	20
0.009	8	0.021	18
0.009	6	0.021	13
0.009	10	0.021	22
0.009	13	0.021	31
0.009	14	0.021	32
0.009	12	0.021	27
0.009	14	0.021	32
0.009	3	0.024	7
0.009	9	0.024	23
0.009	17	0.024	47
0.009	26	0.024	69
0.009	16	0.024	43
0.012	10	0.03	24
0.012	11	0.03	28
0.012	9	0.03	22
0.012	17	0.03	44
0.012	12	0.03	31
0.012	5	0.03	12

MD % mix	# of Medium Truck each lane	HD % mix	# of Heavy Truck each lane
0.012	4	0.03	9
0.012	7	0.03	18
0.007	4	0.017	9
0.007	18	0.017	43
0.007	1	0.017	1
0.007	7	0.017	16
0.007	6	0.017	14
0.013	6	0.032	14
0.013	11	0.032	27
0.013	22	0.032	55
0.013	9	0.032	22
0.007	5	0.017	13
0.007	12	0.017	30
0.012	13	0.03	32
0.012	8	0.03	20
0.012	5	0.03	12
0.012	6	0.03	14
0.012	5	0.03	13
0.012	10	0.03	24
0.012	20	0.03	49
0.012	7	0.03	18
0.012	13	0.03	33
0.012	19	0.03	46
0.009	12	0.024	31
0.009	11	0.024	28
0.009	6	0.024	15
0.009	19	0.021	45
0.009	12	0.021	29
0.009	13	0.021	30
0.009	18	0.021	43
0.009	11	0.021	26
0.009	16	0.021	38
0.009	12	0.021	27
0.009	6	0.021	13
0.009	9	0.021	20
0.009	8	0.021	20
0.009	9	0.021	21
0.009	6	0.021	14
0.009	8	0.021	18
0.009	14	0.021	34
0.009	6	0.021	14
0.009	15	0.021	35
0.009	19	0.021	44

MD % mix	# of Medium Truck each lane	HD % mix	# of Heavy Truck each lane
0.009	17	0.021	40
0.009	10	0.021	23
0.009	12	0.021	29
0.011	8	0.009	7
0.011	17	0.009	14
0.011	12	0.009	10
0.011	15	0.009	12
0.011	10	0.009	8
0.011	7	0.009	6
0.011	4	0.009	3
0.011	19	0.009	15
0.011	6	0.009	5
0.011	7	0.009	6
0.011	20	0.009	17
0.011	20	0.009	17
0.008	15	0.013	24
0.008	1	0.013	1
0.008	12	0.013	19
0.008	10	0.013	16
0.008	12	0.013	19
0.008	18	0.013	29
0.008	11	0.013	17
0.008	11	0.013	17
0.007	6	0.023	20
0.007	3	0.023	9
0.007	7	0.023	23
0.007	3	0.023	10
0.007	6	0.023	20
0.007	21	0.023	69
0.007	12	0.023	38
0.007	11	0.023	36
0.007	5	0.023	17
0.007	4	0.023	12
0.007	10	0.023	33
0.005	2	0.003	1
0.005	0	0.003	0
0.005	0	0.003	0
0.005	1	0.003	0
0.005	0	0.003	0
0.005	1	0.003	1
0.005	0	0.003	0
0.005	3	0.003	2
0.005	5	0.003	3

MD % mix	# of Medium Truck each lane	HD % mix	# of Heavy Truck each lane
0.005	3	0.003	2
0.005	1	0.003	0
0.005	0	0.003	0
0.008	2	0.018	5
0.008	5	0.018	11
0.008	2	0.018	5
0.008	3	0.018	6
0.008	2	0.018	5
0.008	2	0.018	5
0.008	8	0.018	18
0.008	3	0.018	6
0.009	4	0.024	12
0.009	1	0.024	3
0.009	3	0.024	7
0.009	2	0.024	6
0.005	1	0.012	2
0.005	3	0.012	6
0.005	0	0.012	1
0.005	1	0.012	1
0.005	1	0.012	2
0.005	1	0.012	2
0.005	1	0.012	3
0.005	1	0.012	4
0.008	1	0.018	2
0.008	1	0.018	2
0.008	2	0.018	5
0.008	3	0.018	7
0.007	5	0.023	18
0.007	20	0.023	65
0.007	21	0.023	70
0.016	5	0.01	3
0.016	6	0.01	4
0.004	3	0.008	5
0.004	0	0.008	0
0.004	0	0.008	1
0.004	0	0.008	1
0.004	1	0.008	2
0.005	5	0.003	3
0.005	5	0.003	3
0.005	3	0.003	2
0.005	5	0.003	3
0.005	4	0.003	2

MD % mix	# of Medium Truck each lane	HD % mix	# of Heavy Truck each lane
0.005	3	0.003	2
0.005	2	0.003	1
0.005	3	0.003	2
0.005	1	0.003	1
0.005	5	0.003	3
0.005	4	0.003	2
0.005	5	0.003	3
0.005	4	0.003	2
0.005	2	0.003	1
0.005	5	0.003	3
0.005	2	0.003	1
0.005	2	0.003	1
0.005	4	0.003	2
0.005	4	0.003	2
0.005	3	0.003	2
0.005	1	0.003	1
0.005	1	0.003	1
0.005	2	0.003	1
0.005	2	0.003	1
0.005	2	0.003	1
0.005	4	0.003	2
0.005	2	0.003	1
0.005	2	0.003	1
0.005	3	0.003	2
0.005	2	0.003	1
0.005	2	0.003	1
0.008	5	0.018	12
0.008	5	0.018	12
0.008	3	0.018	8
0.008	5	0.018	12
0.008	4	0.018	8
0.008	6	0.018	13
0.008	1	0.018	2
0.008	3	0.018	6
0.008	7	0.018	15
0.008	4	0.018	10

MD % mix	# of Medium Truck each lane	HD % mix	# of Heavy Truck each lane
0.008	4	0.018	10
0.008	4	0.018	10
0.008	5	0.018	10
0.008	8	0.018	18
0.008	6	0.018	13
0.008	4	0.018	8
0.008	7	0.018	16
0.008	8	0.018	18
0.008	8	0.018	18
0.008	10	0.018	23
0.008	10	0.018	21
0.008	10	0.018	22
0.008	4	0.018	9
0.008	3	0.018	7
0.008	3	0.018	7
0.008	5	0.018	12
0.008	7	0.018	16
0.008	8	0.018	17
0.008	4	0.018	10
0.008	8	0.018	19
0.008	6	0.018	14
0.008	5	0.018	11
0.008	10	0.018	21
0.008	12	0.018	27
0.008	8	0.018	17
0.008	5	0.018	12
0.008	3	0.018	6
0.008	1	0.018	3
0.008	3	0.018	6
0.008	5	0.018	11
0.01	1	0.024	2
0.01	2	0.024	5
0.01	5	0.024	12
0.01	4	0.024	9
0.01	2	0.024	5
0.01	1	0.024	2
0.01	6	0.024	15

MD % mix	# of Medium Truck each lane	HD % mix	# of Heavy Truck each lane
0.01	5	0.024	11
0.01	11	0.024	25
0.01	7	0.024	16
0.01	5	0.024	11
0.01	5	0.024	13
0.005	1	0.012	2
0.005	1	0.012	3
0.005	3	0.012	8
0.005	2	0.012	5
0.005	2	0.012	4
0.005	0	0.012	1
0.005	7	0.012	16
0.005	4	0.012	10
0.005	4	0.012	10
0.005	5	0.012	13
0.005	8	0.012	19
0.005	11	0.012	25
0.005	1	0.012	2
0.005	3	0.012	7
0.005	3	0.012	7
0.005	2	0.012	5
0.005	3	0.012	8
0.005	4	0.012	10
0.005	5	0.012	12
0.005	5	0.012	13
0.005	3	0.012	8
0.005	5	0.012	13
0.005	4	0.012	10
0.005	2	0.012	4
0.005	2	0.012	4
0.005	3	0.012	8
0.005	1	0.012	3
0.005	6	0.012	14

Loop 1604 Existing Condition 2018 AM TNM Roadway Segment	Speed mph	AM Peak	# Lanes	DHV per lane	LD % mix	# of Auto each lane
Loop 1604 Mainlanes						
1604 ebml w of Braun OR	70	1900	2	950.0	0.98	931
1604 ebml Braun OR to Bandera OR	70	2750	2	1,375.0	0.98	1,348
1604 ebml Bandera OR to Haus OFR	70	3550	2	1,775.0	0.98	1,740
1604 ebml Haus OFR to KSP 2 OR	70	3217	2	1,608.5	0.98	1,576
1604 ebml Haus OFR to KSP OR	70	3217	2	1,608.5	0.98	1,576
1604 ebml Bab OFR to Brenan OFR	70	4073	2	2,036.5	0.98	1,996
1604 ebml Brenan OFR to JP OR	70	3763	2	1,881.5	0.98	1,844
1604 ebml 10FR OFR to DC OFR	70	4021	2	2,010.5	0.98	1,970
1604 ebml at IH10	70	2213	2	1,106.5	0.98	1,084
1604 ebml DC OR to 10FR OR	70	3705	2	1,852.5	0.97	1,797
1604 ebml 10FR OR to LS OFR	70	4498	3	1,499.3	0.97	1,454
1604 ebml btw LS ramps	70	3833	2	1,916.5	0.97	1,859
1604 ebml Mil OFR to Bitters OFR	70	3938	2	1,969.0	0.97	1,910
1604 ebml Bitters OFR to Mil OR	70	3222	2	1,611.0	0.97	1,563
1604 ebml Mil OR to Bitters OR	70	3743	2	1,871.5	0.97	1,815
1604 ebml Bitters OR to Blanco OFR	70	4241	2	2,120.5	0.97	2,057
1604 ebml btw Blanco ramps	70	3767	2	1,883.5	0.97	1,827
1604 ebml Blanco OR to Voigt OFR	70	5256	3	1,752.0	0.97	1,699
1604 ebml Voigt OFR to 281FR OFR	70	4356	3	1,452.0	0.97	1,408
1604 ebml 281FR OFR to 281DC OFR	70	3288	3	1,096.0	0.97	1,063
1604 ebml 281DC OFR to Voight OR	70	2291	2	1,145.5	0.97	1,111
1604 ebml at US281	70	2718	2	1,359.0	0.97	1,318
1604 ebml GC OFR to 281DC OR	70	2413	2	1,206.5	0.967	1,167
1604 ebml 281DC OR to GC OR	70	3198	3	1,066.0	0.967	1,031
1604 ebml btw Redl ramps 3ln	70	3311	3	1,103.7	0.967	1,067
1604 ebml btw Redl ramps 2ln	70	3311	2	1,655.5	0.967	1,601
1604 ebml Redl OR to Bulv OFR	70	3566	2	1,783.0	0.967	1,724
1604 ebml btw Bulv ramps	70	2833	2	1,416.5	0.958	1,357
1604 ebml OC OR to Jud OFR	70	3637	2	1,818.5	0.958	1,742
1604 ebml btw Jud ramps	70	3246	2	1,623.0	0.958	1,555
1604 ebml Jud OR to GMT OFR	70	3531	2	1,765.5	0.958	1,691
1604 ebml btw GMT ramps	70	3337	2	1,668.5	0.958	1,598
1604 ebml Nac OFR to LO OFR	65	3398	2	1,699.0	0.958	1,628
1604 ebml RB OFR to LO OR	65	3796	2	1,898.0	0.976	1,852
1604 ebml LO OR to I35DC OFR	65	4333	3	1,444.3	0.976	1,410
1604 ebml at I35	65	2087	2	1,043.5	0.955	997
1604 wbml at I35	65	1606	2	803.0	0.955	767
1604 wbml I35DC OR to LO OFR	65	3758	2	1,879.0	0.976	1,834
1604 wbml LO OFR to Nac OFR	65	3420	2	1,710.0	0.976	1,669
1604 wbml LO OR to Nac OR	70	3044	2	1,522.0	0.958	1,458
1604 wbml btw GMT ramps	70	2884	2	1,442.0	0.958	1,381
1604 wbml GMT OR to Jud OFR	70	3001	2	1,500.5	0.958	1,437

Loop 1604 Existing Condition 2018 AM

TNM Roadway Segment	Speed mph	AM Peak	# Lanes	DHV per lane	LD % mix	# of Auto each lane
1604 wbml btw Jud ramps	70	2447	2	1,223.5	0.958	1,172
1604 wbml Jud OR to Vul OFR	70	2855	2	1,427.5	0.958	1,368
1604 wbml Vul OR to Bulv OR	70	2901	2	1,450.5	0.958	1,390
1604 wbml Bulv OR to Redl OFR	70	4140	2	2,070.0	0.967	2,002
1604 wbml btw Redl ramps	70	3886	2	1,943.0	0.967	1,879
1604 wbml Redl OR to 281DC OFR	70	4926	3	1,642.0	0.967	1,588
1604 wbml 281DC OFR to 281FR OFR	70	3609	2	1,804.5	0.967	1,745
1604 wbml at US281	70	3016	2	1,508.0	0.97	1,463
1604 wbml SOP OFR to 281DC OR	70	2241	2	1,120.5	0.97	1,087
1604 wbml 281DC OR to 281FR OR	70	2762	3	920.7	0.97	893
1604 wbml 281FR OR to Blanco OFR	70	3713	3	1,237.7	0.97	1,201
1604 wbml Blanco OFR to SOP OR	70	2333	2	1,166.5	0.97	1,132
1604 wbml SOP OR to Blanco OR	70	3093	2	1,546.5	0.97	1,500
1604 wbml Blanco OR to Rog OFR	70	4037	3	1,345.7	0.97	1,305
1604 wbml Rog OFR to Mil OFR	70	3667	2	1,833.5	0.97	1,778
1604 wbml Mil OFR to Rog OR	70	2445	2	1,222.5	0.97	1,186
1604 wbml Rog OR to Mil OR	70	3343	2	1,671.5	0.97	1,621
1604 wbml Mil OR to LS OFR	70	4360	3	1,453.3	0.97	1,410
1604 wbml btw LS ramps	70	4083	2	2,041.5	0.97	1,980
1604 wbml LS OR to 10FR OFR	70	4703	3	1,567.7	0.97	1,521
1604 wbml 10FR OFR to 10DC OFR	70	3924	3	1,308.0	0.97	1,269
1604 wbml at IH10	70	2068	2	1,034.0	0.98	1,013
1604 wbml 10FR OR to Bab OFR	70	2464	2	1,232.0	0.98	1,207
1604 wbml btw Bab ramps	70	2139	2	1,069.5	0.98	1,048
1604 wbml KS OFR to 1560 OR	70	2160	2	1,080.0	0.98	1,058
1604 wbml KS OFR to 1560 OR 2	70	2160	2	1,080.0	0.98	1,058
1604 wbml 1560 OR to Bandera OFR	70	2799	2	1,399.5	0.98	1,372
1604 wbml Ban OFR to Braun OFR	70	2067	2	1,033.5	0.98	1,013
1604 wbml w of Braun OFR	70	1738	2	869.0	0.98	852
IH 10 / Frontage Roads						
I10 nbml s of de Zavala OR	65	4720	4	1,180.0	0.979	1,155
I10 nbml s of OFR to 1604 FR	65	5396	5	1,079.2	0.979	1,057
I10 nbml 1604 OFR to UTSA OR	65	4434	4	1,108.5	0.979	1,085
I10 nbml n of UTSA OR	65	4688	3	1,562.7	0.979	1,530
I10 nbml 1604 to DC OR	70	2759	3	919.7	0.97	892
I10 nbml DC OR to LC OFR	70	3923	4	980.8	0.97	951
I10 nbml LC OFR to 1604FR OR	70	3381	3	1,127.0	0.97	1,093
I10 sbml 1604FR OFR to LC OR	65	5281	3	1,760.3	0.97	1,708
I10 sbml LC OR to DC OFR	65	5678	4	1,419.5	0.97	1,377
I10 sbml n of 1604	65	4617	3	1,539.0	0.97	1,493
I10 sbml n of 1604FR OR	65	6812	3	2,270.7	0.979	2,223
I10 sbml 1604FR OR to UTSA OFR	65	7765	4	1,941.3	0.979	1,900

Loop 1604 Existing Condition 2018 AM TNM Roadway Segment	Speed mph	AM Peak	# Lanes	DHV per lane	LD % mix	# of Auto each lane
I10 sbml s of UTSA OFR	65	7293	4	1,823.3	0.979	1,785
I10 sbml s of de Zav OFR	65	6766	4	1,691.5	0.979	1,656
I10 nbfr s of de Zavala OR	50	2386	3	795.3	0.974	775
I10 nbfr s of UTSA	50	1710	3	570.0	0.974	555
I10 nbfr UTSA to OR	50	680	3	226.7	0.974	221
I10 nbfr OR to 1604 OFR 3 ln	50	426	3	142.0	0.974	138
I10 nbfr OR to 1604 OFR 2ln	50	426	2	213.0	0.974	207
I10 nbfr OFR to 1604 ebfr	50	1388	3	462.7	0.974	451
I10 nbfr 1604 wbfr to OR	50	400	2	200.0	0.974	195
I10 nbfr OR to LC OFR 2ln	50	140	2	70.0	0.974	68
I10 nbfr OR to LC OFR 1ln	50	140	1	140.0	0.974	136
I10 nbfr OFR to LC	50	682	3	227.3	0.974	221
I10 sbfr LC to OR	50	585	3	195.0	0.974	190
I10 sbfr OR to 1604 OFR	50	188	2	94.0	0.974	92
I10 sbfr OFR to 1604 wbfr	50	643	2	321.5	0.974	313
I10 sbfr OR to UTSA OFR 3ln	50	622	3	207.3	0.974	202
I10 sbfr OR to UTSA OFR 2ln	50	622	2	311.0	0.974	303
I10 sbfr OFR to UTSA	50	795	4	198.8	0.974	194
I10 sbfr s of UTSA	50	1995	2	997.5	0.974	972
I10 nbml n of 1604FR OR 3ln	70	2868	3	956.0	0.97	927
I10 nbml n of 1604FR OR 2ln	70	2868	2	1,434.0	0.97	1,391
I10 sbml n of SumOaks OR 2ln	70	3889	2	1,944.5	0.97	1,886
I10 sbml n of SumOaks OR 3ln	70	3889	3	1,296.3	0.97	1,257
I10 sbml n of 1604FR OFR	70	5736	4	1,434.0	0.97	1,391
I10 nbfr LC to CB OFR	50	427	2	213.5	0.974	208
I10 nbfr CB OFR to LC OR	50	749	3	249.7	0.974	243
I10 nbfr n of LC OR	50	472	3	157.3	0.974	153
I10 sbfr n of SumOaks OR	50	1941	3	647.0	0.974	630
I10 sbfr SumOaks OR to LC	50	712	3	237.3	0.974	231
LP 1604 Frontage Road						
1604 ebfr w of Bandera (2ln)	45	1906	2	953.0	0.992	945
1604 ebfr w of Bandera (3ln)	45	1453	3	484.3	0.992	480
1604 ebfr Bandera to OR	45	2224	2	1,112.0	0.992	1,103
1604 ebfr Bandera OR to Haus	45	1424	2	712.0	0.992	706
1604 ebfr Haus to KSP	45	1636	2	818.0	0.992	811
1604 ebfr KSP to Bab OFR	45	1250	2	625.0	0.992	620
1604 ebfr OFR to Babcock	45	1592	3	530.7	0.992	526
1604 ebfr Bab to Bren OFR	45	1585	3	528.3	0.992	524
1604 ebfr OFR to Brenan	45	1895	4	473.8	0.992	470
1604 ebfr Brenan to JP	45	1827	4	456.8	0.992	453
1604 ebfr JP to OR	45	1986	3	662.0	0.992	657
1604 ebfr JP OR to 10FR OFR	45	1281	2	640.5	0.992	635

Loop 1604 Existing Condition 2018 AM

TNM Roadway Segment	Speed mph	AM Peak	# Lanes	DHV per lane	LD % mix	# of Auto each lane
1604 ebfr 10FR OFR to 10sbfr	45	1728	2	864.0	0.992	857
1604 ebfr 10FR OR to VJ	45	742	2	371.0	0.974	361
1604 ebfr VJ to Trade	45	1065	2	532.5	0.974	519
1604 ebfr Trade to LS OFR	45	956	2	478.0	0.974	466
1604 ebfr OFR to LS	45	1621	2	810.5	0.974	789
1604 ebfr LS to OR	45	1254	2	627.0	0.974	611
1604 ebfr OR to Mil OFR	45	601	2	300.5	0.974	293
1604 ebfr OFR to Mil	45	940	2	470.0	0.974	458
1604 ebfr Mil to Bitters OFR	55	1331	2	665.5	0.974	648
1604 ebfr OFR to Mil OR	55	2047	3	682.3	0.974	665
1604 ebfr OR to Bitters	55	950	2	475.0	0.974	463
1604 ebfr Bitters to OR	55	1086	2	543.0	0.974	529
1604 ebfr OR to Hueb	55	495	2	247.5	0.974	241
1604 ebfr Hueb to Blanco OFR	55	685	2	342.5	0.974	334
1604 ebfr OFR to Blanco	55	1159	2	579.5	0.974	564
1604 ebfr Blanco to OR	55	2071	2	1,035.5	0.974	1,009
1604 ebfr OR to Voight	55	582	2	291.0	0.974	283
1604 ebfr Voight to 281FR OFR	45	1281	2	640.5	0.974	624
1604 ebfr OFR to Voight OR	45	2349	3	783.0	0.974	763
1604 ebfr Voight OR to 281 sbfr	45	1922	3	640.7	0.974	624
1604 ebfr 281 nbfr to GC OFR	45	723	2	361.5	0.966	349
1604 ebfr OFR to GC	45	1028	3	342.7	0.966	331
1604 ebfr GC to OR	55	760	2	380.0	0.966	367
1604 ebfr OR to Redl	55	178	2	89.0	0.966	86
1604 ebfr Redl to OR	55	502	2	251.0	0.983	247
1604 ebfr OR to Bulv OFR	55	247	2	123.5	0.983	121
1604 ebfr OFR to Bulv	55	980	3	326.7	0.983	321
1604 ebfr Bulv to OR	55	1084	2	542.0	0.983	533
1604 ebfr OR to Jud OFR 2ln	55	106	2	53.0	0.983	52
1604 ebfr OR to Jud OFR 1ln	55	106	1	106.0	0.983	104
1604 ebfr OFR to Jud	55	569	2	284.5	0.983	280
1604 ebfr Jud to OR	55	390	2	195.0	0.983	192
1604 ebfr OR to GMT OFR 2ln	55	105	2	52.5	0.983	52
1604 ebfr OR to GMT OFR 1ln	55	105	1	105.0	0.983	103
1604 ebfr OFR to Nac	45	551	2	275.5	0.983	271
1604 ebfr LO OR to RBP OFR	45	507	2	253.5	0.988	250
1604 ebfr OFR to I35DC OR	45	593	2	296.5	0.988	293
1604 ebfr I35DC OR to RBP	40	445	2	222.5	0.988	220
1604 wbfr GW to I35DC OFR	45	305	2	152.5	0.988	151
1604 wbfr OFR to LO OFR	45	432	2	216.0	0.988	213
1604 wbfr OFR to LO	45	770	2	385.0	0.988	380
1604 wbfr Nac to OR	45	459	2	229.5	0.983	226
1604 wbfr OR to Jud OFR 2ln	55	204	2	102.0	0.983	100

Loop 1604 Existing Condition 2018 AM

TNM Roadway Segment	Speed mph	AM Peak	# Lanes	DHV per lane	LD % mix	# of Auto each lane
1604 wbfr OR to Jud OFR 1ln	55	204	1	204.0	0.983	201
1604 wbfr OFR to Jud	55	758	2	379.0	0.983	373
1604 wbfr Jud to OR	55	976	2	488.0	0.983	480
1604 wbfr OR to Vulc OFR	55	568	2	284.0	0.983	279
1604 wbfr OR to Bulv	55	1008	2	504.0	0.983	495
1604 wbfr Bulv to OR	55	2000	2	1,000.0	0.983	983
1604 wbfr OR to Redl OFR 2ln	55	907	2	453.5	0.983	446
1604 wbfr OR to Redl OFR 1ln	55	907	1	907.0	0.983	892
1604 wbfr OFR to Redl	55	1161	2	580.5	0.983	571
1604 wbfr Redl to OR	55	1411	2	705.5	0.966	682
1604 wbfr OR to CBC	45	371	2	185.5	0.966	179
1604 wbfr CBC to 281 nbfr OFR	45	651	2	325.5	0.966	314
1604 wbfr OFR to 281 nbfr	45	1060	3	353.3	0.966	341
1604 wbfr 281 sbfr to SOP OFR	45	1990	2	995.0	0.974	969
1604 wbfr OR to SOP	45	1362	3	454.0	0.974	442
1604 wbfr SOP to OFR	55	986	2	493.0	0.974	480
1604 wbfr OFR to SOP OR	55	2366	3	788.7	0.974	768
1604 wbfr OR to Blanco	55	1606	3	535.3	0.974	521
1604 wbfr Blanco to OR	55	1737	2	868.5	0.974	846
1604 wbfr OR to Hueb	55	793	2	396.5	0.974	386
1604 wbfr Hueb to OFR	55	921	2	460.5	0.974	449
1604 wbfr OFR to RogR	55	1291	2	645.5	0.974	629
1604 wbfr RogR to OFR	55	1723	2	861.5	0.974	839
1604 wbfr OFR to RogR OR	55	3034	3	1,011.3	0.974	985
1604 wbfr OR to Mil	55	2136	2	1,068.0	0.974	1,040
1604 wbfr Mil to OR	45	1973	2	986.5	0.974	961
1604 wbfr OR to LS OFR	45	956	2	478.0	0.974	466
1604 wbfr OFR to LS	45	1233	2	616.5	0.974	600
1604 wbfr LS to OR	45	1267	2	633.5	0.974	617
1604 wbfr OR to Trade	45	647	2	323.5	0.974	315
1604 wbfr Trade to VJ	45	703	2	351.5	0.974	342
1604 wbfr VJ to OFR	45	555	2	277.5	0.974	270
1604 wbfr OFR to 10 nbfr	45	1334	2	667.0	0.974	650
1604 wbfr 10 sbfr to 10DC OFR	45	588	2	294.0	0.992	292
1604 wbfr OFR to LC	45	1537	3	512.3	0.992	508
1604 wbfr LC to CH	45	451	3	150.3	0.992	149
1604 wbfr CH to Babcock	45	326	2	163.0	0.992	162
1604 wbfr Babcock to OR	45	630	3	210.0	0.992	208
1604 wbfr OR to KSP	45	280	2	140.0	0.992	139
1604 wbfr KSP to 1560 2ln	45	590	2	295.0	0.992	293
1604 wbfr KSP to 1560 3ln	45	590	3	196.7	0.992	195
1604 wbfr 1560 to Bandera OFR	45	469	2	234.5	0.992	233
1604 wbfr OFR to Bandera	45	1201	3	400.3	0.992	397

Loop 1604 Existing Condition 2018 AM

TNM Roadway Segment	Speed mph	AM Peak	# Lanes	DHV per lane	LD % mix	# of Auto each lane
1604 wbfr Bandera to OFR	50	1098	2	549.0	0.992	545
Ramps						
EB 1604 Braun OR	50	850	1	850.0	0.98	833
EB 1604 Bandera OR	50	800	1	800.0	0.98	784
EB Hausman OFR	40	333	1	333.0	0.98	326
EB KSP OR	50	1198	1	1,198.0	0.98	1,174
EB Babcock OFR	40	342	1	342.0	0.98	335
EB Brenan OFR	50	310	1	310.0	0.98	304
EB 10FR OFR	40	447	1	447.0	0.98	438
EB 10DC OFR	40	1808	1	1,808.0	0.98	1,772
EB 10DC OR	40	1492	1	1,492.0	0.97	1,447
EB 10FR OR	50	793	1	793.0	0.97	769
EB LS OFR	40	665	1	665.0	0.97	645
EB LS OR	50	653	1	653.0	0.97	633
EB Mil OFR	50	548	1	548.0	0.97	532
EB Bitters OFR	40	716	1	716.0	0.97	695
EB Mil OR	50	521	1	521.0	0.97	505
EB Bitters OR	50	498	1	498.0	0.97	483
EB Blanco OFR	50	474	1	474.0	0.97	460
EB Blanco OR	50	1489	1	1,489.0	0.97	1,444
EB Voight OFR	40	900	1	900.0	0.97	873
EB 281FR OFR	40	1068	1	1,068.0	0.97	1,036
EB 281DC OFR	40	997	1	997.0	0.97	967
EB Voight OR	50	427	1	427.0	0.97	414
EB GC OFR	50	305	1	305.0	0.967	295
EB 281DC OR	40	785	1	785.0	0.967	759
EB GC OR	50	582	1	582.0	0.967	563
EB Redl OFR	40	469	1	469.0	0.967	454
EB Redl OR	50	255	1	255.0	0.958	244
EB Bulv OFR	40	733	1	733.0	0.958	702
EB Jud OFR	40	391	1	391.0	0.958	375
EB Jud OR	50	285	1	285.0	0.958	273
EB GMT OFR	40	194	1	194.0	0.958	186
EB RB OFR	50	168	1	168.0	0.976	164
EB LO OR	50	537	1	537.0	0.976	524
EB I35DC OFR	40	2246	2	1,123.0	0.976	1,096
EB I35DC OR from FR	40	148	1	148.0	0.955	141
EB I35DC	40	2394	2	1,197.0	0.955	1,143
WB I35DC OR	40	2152	1	2,152.0	0.955	2,055
WB I35DC OFR	40	127	1	127.0	0.955	121
WB LO OFR	40	338	1	338.0	0.976	330
WB GMT OR	50	117	1	117.0	0.958	112

Loop 1604 Existing Condition 2018 AM

TNM Roadway Segment	Speed mph	AM Peak	# Lanes	DHV per lane	LD % mix	# of Auto each lane
WB Jud OFR	40	554	1	554.0	0.958	531
WB Jud OR	50	408	1	408.0	0.958	391
WB Bulv OR	50	1239	1	1,239.0	0.958	1,187
WB Redl OFR	40	254	1	254.0	0.958	243
WB Redl OR	50	1040	1	1,040.0	0.967	1,006
WB 281DC OFR	40	1317	1	1,317.0	0.967	1,274
WB 281FR OFR	40	593	1	593.0	0.967	573
NBWB 281DC	40	1220	2	610.0	0.97	592
WB SOP OFR	40	775	1	775.0	0.97	752
WB 281DC OR	40	521	1	521.0	0.97	505
WB 281FR OR	50	951	1	951.0	0.97	922
WB Blanco OFR	50	1380	1	1,380.0	0.97	1,339
WB SOP OR	50	760	1	760.0	0.97	737
WB Blanco OR	50	944	1	944.0	0.97	916
WB Rog OFR	40	370	1	370.0	0.97	359
WB Mil OFR	40	1222	1	1,222.0	0.97	1,185
WB Rog OR	50	898	1	898.0	0.97	871
WB Mil OR	50	1017	1	1,017.0	0.97	986
WB LS OFR	40	277	1	277.0	0.97	269
WB LS OR	50	620	1	620.0	0.97	601
WB 10FR OFR	40	779	1	779.0	0.97	756
WB 10DC OFR	40	1856	1	1,856.0	0.97	1,800
WB 10DC OR	40	1135	1	1,135.0	0.98	1,112
WB 10DC OFR to FR	40	210	1	210.0	0.98	206
WB Babcock OFR	40	325	1	325.0	0.98	319
WB Babcock OR	50	350	1	350.0	0.98	343
WB KS OFR	40	329	1	329.0	0.98	322
WB 1560 OR	50	639	1	639.0	0.98	626
WB Bandera OFR	40	732	1	732.0	0.98	717
WB Braun OFR	45	329	1	329.0	0.98	322
10NB UTSA OR	40	254	1	254.0	0.979	249
10NB 1604FR OFR	50	962	1	962.0	0.979	942
10NB DC OFR	40	1776	2	888.0	0.979	869
10NB DC OR	40	1164	1	1,164.0	0.97	1,129
10NB 1604FR OR	50	260	1	260.0	0.97	252
10NB LC OFR	40	542	2	271.0	0.97	263
10SB 1604FR OFR	40	455	1	455.0	0.97	441
10SB DC OFR	40	1061	1	1,061.0	0.97	1,029
10SB LC OR	50	397	1	397.0	0.97	385
10SB DC OR	40	2500	2	1,250.0	0.979	1,224
10SB 1604FR OR	50	953	1	953.0	0.979	933
10SB UTSA OFR	50	472	1	472.0	0.979	462
10SB de Zavala OFR	45	527	1	527.0	0.979	516

Loop 1604 Existing Condition 2018 AM

TNM Roadway Segment	Speed mph	AM Peak	# Lanes	DHV per lane	LD % mix	# of Auto each lane
10NB de Zavala OR	45	676	1	676.0	0.979	662
WB 10DC W	40	1345	1	1,345.0	0.98	1,318
LC ETA	25	456	1	456.0	0.992	452
LC WTA	25	6	1	6.0	0.992	6
Brenan ETA	25	79	1	79.0	0.992	78
Brenan WTA	25	15	1	15.0	0.992	15
Babcock ETA	25	158	1	158.0	0.992	157
Babcock WTA	25	98	1	98.0	0.992	97
1560 ETA	25	15	1	15.0	0.992	15
1560 WTA	25	147	1	147.0	0.992	146
Bandera ETA	25	287	1	287.0	0.992	285
Bandera WTA	25	103	1	103.0	0.992	102
LS ETA	25	80	1	80.0	0.974	78
LS WTA	25	33	1	33.0	0.974	32
Mil ETA	25	497	1	497.0	0.974	484
Blanco ETA	25	129	1	129.0	0.974	126
Blanco WTA	25	116	1	116.0	0.974	113
SO ETA	25	314	1	314.0	0.974	306
SO WTA	25	127	1	127.0	0.974	124
GC WTA	25	198	1	198.0	0.966	191
10NB CB OFR	40	773	1	773.0	0.97	750
10NB LC OR	50	277	1	277.0	0.97	269
10SB SO OR	50	1847	1	1,847.0	0.97	1,792
LC STA	25	113	1	113.0	0.974	110
LC NTA	25	164	1	164.0	0.974	160
Cross Streets						
SB Bandera n of 1604	45	1633	3	544.3	0.992	540
SB Bandera s of 1604	45	1165	3	388.3	0.992	385
SB Bandera at 1604	45	1545	3	515.0	0.992	511
NB Bandera n of 1604	45	1147	3	382.3	0.992	379
NB Bandera s of 1604	45	1487	4	371.8	0.992	369
NB Bandera at 1604	45	1280	4	320.0	0.992	317
SB 1560 n of 1604	45	1295	3	431.7	0.992	428
SB Hausman s of 1604	45	1059	2	529.5	0.992	525
SB Hausman at 1604	45	1119	3	373.0	0.992	370
NB 1560 n of 1604	45	319	2	159.5	0.992	158
NB Hausman s of 1604	45	480	3	160.0	0.992	159
NB Hausman at 1604	45	529	3	176.3	0.992	175
SB Babcock n of 1604	40	501	1	501.0	0.992	497

Loop 1604 Existing Condition 2018 AM

TNM Roadway Segment	Speed mph	AM Peak	# Lanes	DHV per lane	LD % mix	# of Auto each lane
SB Babcock n of 1604 2 ln	40	501	2	250.5	0.992	248
SB Babcock s of 1604	40	551	1	551.0	0.992	547
SB Babcock at 1604	40	438	2	219.0	0.992	217
NB Babcock n of 1604	40	416	2	208.0	0.992	206
NB Babcock s of 1604	40	438	2	219.0	0.992	217
NB Babcock at 1604	40	392	2	196.0	0.992	194
SB CH n of 1604	30	466	1	466.0	0.992	462
SB Brennan s of 1604	20	561	2	280.5	0.992	278
SB Brennan at 1604	30	472	2	236.0	0.992	234
NB CH n of 1604	30	146	1	146.0	0.992	145
NB Brennan s of 1604	20	92	2	46.0	0.992	46
NB Brennan at 1604	30	135	2	67.5	0.992	67
SB LC n of 1604	40	203	2	101.5	0.992	101
SB JP s of 1604	20	683	2	341.5	0.992	339
SB LC at 1604	40	605	3	201.7	0.992	200
NB LC n of 1604	40	620	2	310.0	0.992	308
NB JP s of 1604	20	173	3	57.7	0.992	57
NB LC at 1604	40	386	3	128.7	0.992	128
SB VJ n of 1604	40	478	2	239.0	0.974	233
SB VJ at 1604	40	669	2	334.5	0.974	326
SB VJ s of 1604	40	342	2	171.0	0.974	167
NB VJ s of 1604	40	496	2	248.0	0.974	242
NB VJ at 1604	40	289	2	144.5	0.974	141
NB VJ n of 1604	40	246	2	123.0	0.974	120
SB LS at 1604	35	229	2	114.5	0.974	112
SB LS s of 1604	35	840	2	420.0	0.974	409
NB LS s o 1604	35	507	2	253.5	0.974	247
NB LS at 1604	35	310	2	155.0	0.974	151
SB Mil n of 1604	45	647	2	323.5	0.974	315
SB Mil at 1604	45	754	2	377.0	0.974	367
SB Mil s of 1604	45	870	2	435.0	0.974	424
NB Mil s of 1604	45	1012	2	506.0	0.974	493
NB Mil at 1604	45	1002	2	501.0	0.974	488
NB Mil n of 1604	45	561	2	280.5	0.974	273
SB Rog n of 1604	30	1008	1	1,008.0	0.974	982
SB Bit at 1604	30	867	1	867.0	0.974	844
SB Bit s of 1604	30	515	1	515.0	0.974	502

Loop 1604 Existing Condition 2018 AM

TNM Roadway Segment	Speed mph	AM Peak	# Lanes	DHV per lane	LD % mix	# of Auto each lane
NB Bit s of 1604	30	606	1	606.0	0.974	590
NB Bit at 1604	30	822	1	822.0	0.974	801
NB Rog n of 1604	30	531	1	531.0	0.974	517
SB Hueb n of 1604	40	1328	2	664.0	0.974	647
SB Hueb at 1604	40	1186	2	593.0	0.974	578
SB Hueb s of 1604	40	978	2	489.0	0.974	476
NB Hueb s of 1604	40	553	2	276.5	0.974	269
NB Hueb at 1604	40	571	2	285.5	0.974	278
NB Hueb n of 1604	40	585	2	292.5	0.974	285
SB Blanco n of 1604	45	2270	3	756.7	0.974	737
SB Blanco at 1604	45	1995	2	997.5	0.974	972
SB Blanco s of 1604	45	1339	2	669.5	0.974	652
NB Blanco s of 1604	45	947	3	315.7	0.974	307
NB Blanco at 1604	45	704	2	352.0	0.974	343
NB Blanco n of 1604	45	835	2	417.5	0.974	407
SB SO n of 1604	40	1345	2	672.5	0.974	655
SB SO at 1604	40	844	2	422.0	0.974	411
SB Voight s of 1604	25	145	1	145.0	0.974	141
NB Voight s of 1604	25	220	2	110.0	0.974	107
NB SO at 1604	40	1082	2	541.0	0.974	527
NB SO n of 1604	40	1772	2	886.0	0.974	863
SB CBC n of 1604	25	7	2	3.5	0.966	3
SB GC at 1604	30	171	2	85.5	0.966	83
SB GC s of 1604	30	314	2	157.0	0.966	152
NB GC s of 1604	30	343	2	171.5	0.966	166
NB GC at 1604	30	270	2	135.0	0.966	130
NB CBC n of 1604	25	24	1	24.0	0.966	23
SB Red n of 1604	40	573	2	286.5	0.966	277
SB Red at 1604	40	405	2	202.5	0.966	196
SB Red s of 1604	40	467	1	467.0	0.966	451
NB Red s of 1604	40	637	1	637.0	0.966	615
NB Red at 1604	40	720	2	360.0	0.966	348
NB Red n of 1604	40	638	2	319.0	0.966	308
SB Jud n of 1604	40	4	2	2.0	0.983	2
SB Jud at 1604	40	288	2	144.0	0.983	142
SB Jud s of 1604	40	508	2	254.0	0.983	250
NB Jud s of 1604	40	651	2	325.5	0.983	320

Loop 1604 Existing Condition 2018 AM

TNM Roadway Segment	Speed mph	AM Peak	# Lanes	DHV per lane	LD % mix	# of Auto each lane
NB Jud at 1604	40	610	2	305.0	0.983	300
NB Jud n of 1604	40	108	2	54.0	0.983	53
SB Bulv n of 1604	45	2625	2	1,312.5	0.983	1,290
SB Bulv at 1604	40	1706	2	853.0	0.983	838
SB Bulv s of 1604	40	1142	2	571.0	0.983	561
NB Bulv s of 1604	40	997	2	498.5	0.983	490
NB Bulv at 1604	40	1457	2	728.5	0.983	716
NB Bulv n of 1604	45	1384	2	692.0	0.983	680

MD % mix	# of Medium Truck each lane	HD % mix	# of Heavy Truck each lane
0.011	10	0.009	9
0.011	15	0.009	12
0.011	20	0.009	16
0.011	18	0.009	14
0.011	18	0.009	14
0.011	22	0.009	18
0.011	21	0.009	17
0.011	22	0.009	18
0.011	12	0.009	10
0.009	17	0.021	39
0.009	13	0.021	31
0.009	17	0.021	40
0.009	18	0.021	41
0.009	14	0.021	34
0.009	17	0.021	39
0.009	19	0.021	45
0.009	17	0.021	40
0.009	16	0.021	37
0.009	13	0.021	30
0.009	10	0.021	23
0.009	10	0.021	24
0.009	12	0.021	29
0.009	11	0.024	29
0.009	10	0.024	26
0.009	10	0.024	26
0.009	15	0.024	40
0.009	16	0.024	43
0.012	17	0.03	42
0.012	22	0.03	55
0.012	19	0.03	49
0.012	21	0.03	53
0.012	20	0.03	50
0.012	20	0.03	51
0.007	13	0.017	32
0.007	10	0.017	25
0.013	14	0.032	33
0.013	10	0.032	26
0.007	13	0.017	32
0.007	12	0.017	29
0.012	18	0.03	46
0.012	17	0.03	43
0.012	18	0.03	45

MD % mix	# of Medium Truck each lane	HD % mix	# of Heavy Truck each lane
0.012	15	0.03	37
0.012	17	0.03	43
0.012	17	0.03	44
0.009	19	0.024	50
0.009	17	0.024	47
0.009	15	0.024	39
0.009	16	0.024	43
0.009	14	0.021	32
0.009	10	0.021	24
0.009	8	0.021	19
0.009	11	0.021	26
0.009	10	0.021	24
0.009	14	0.021	32
0.009	12	0.021	28
0.009	17	0.021	39
0.009	11	0.021	26
0.009	15	0.021	35
0.009	13	0.021	31
0.009	18	0.021	43
0.009	14	0.021	33
0.009	12	0.021	27
0.011	11	0.009	9
0.011	14	0.009	11
0.011	12	0.009	10
0.011	12	0.009	10
0.011	12	0.009	10
0.011	15	0.009	13
0.011	11	0.009	9
0.011	10	0.009	8
0.008	9	0.013	15
0.008	9	0.013	14
0.008	9	0.013	14
0.008	13	0.013	20
0.007	6	0.023	21
0.007	7	0.023	23
0.007	8	0.023	26
0.007	12	0.023	40
0.007	10	0.023	33
0.007	11	0.023	35
0.008	18	0.013	30
0.008	16	0.013	25

MD % mix	# of Medium Truck each lane	HD % mix	# of Heavy Truck each lane
0.008	15	0.013	24
0.008	14	0.013	22
0.016	13	0.01	8
0.016	9	0.01	6
0.016	4	0.01	2
0.016	2	0.01	1
0.016	3	0.01	2
0.016	7	0.01	5
0.016	3	0.01	2
0.016	1	0.01	1
0.016	2	0.01	1
0.016	4	0.01	2
0.016	3	0.01	2
0.016	2	0.01	1
0.016	5	0.01	3
0.016	3	0.01	2
0.016	5	0.01	3
0.016	3	0.01	2
0.016	16	0.01	10
0.007	7	0.023	22
0.007	10	0.023	33
0.007	14	0.023	45
0.007	9	0.023	30
0.007	10	0.023	33
0.016	3	0.01	2
0.016	4	0.01	2
0.016	3	0.01	2
0.016	10	0.01	6
0.016	4	0.01	2
0.005	5	0.003	3
0.005	2	0.003	1
0.005	6	0.003	3
0.005	4	0.003	2
0.005	4	0.003	2
0.005	3	0.003	2
0.005	3	0.003	2
0.005	3	0.003	2
0.005	2	0.003	1
0.005	2	0.003	1
0.005	3	0.003	2
0.005	3	0.003	2

MD % mix	# of Medium Truck each lane	HD % mix	# of Heavy Truck each lane
0.005	4	0.003	3
0.008	3	0.018	7
0.008	4	0.018	10
0.008	4	0.018	9
0.008	6	0.018	15
0.008	5	0.018	11
0.008	2	0.018	5
0.008	4	0.018	8
0.008	5	0.018	12
0.008	5	0.018	12
0.008	4	0.018	9
0.008	4	0.018	10
0.008	2	0.018	4
0.008	3	0.018	6
0.008	5	0.018	10
0.008	8	0.018	19
0.008	2	0.018	5
0.008	5	0.018	12
0.008	6	0.018	14
0.008	5	0.018	12
0.01	4	0.024	9
0.01	3	0.024	8
0.01	4	0.024	9
0.01	1	0.024	2
0.005	1	0.012	3
0.005	1	0.012	1
0.005	2	0.012	4
0.005	3	0.012	7
0.005	0	0.012	1
0.005	1	0.012	1
0.005	1	0.012	3
0.005	1	0.012	2
0.005	0	0.012	1
0.005	1	0.012	1
0.005	1	0.012	3
0.004	1	0.008	2
0.004	1	0.008	2
0.004	1	0.008	2
0.004	1	0.008	1
0.004	1	0.008	2
0.004	2	0.008	3
0.005	1	0.012	3
0.005	1	0.012	1

MD % mix	# of Medium Truck each lane	HD % mix	# of Heavy Truck each lane
0.005	1	0.012	2
0.005	2	0.012	5
0.005	2	0.012	6
0.005	1	0.012	3
0.005	3	0.012	6
0.005	5	0.012	12
0.005	2	0.012	5
0.005	5	0.012	11
0.005	3	0.012	7
0.01	7	0.024	17
0.01	2	0.024	4
0.01	3	0.024	8
0.01	4	0.024	8
0.008	8	0.018	18
0.008	4	0.018	8
0.008	4	0.018	9
0.008	6	0.018	14
0.008	4	0.018	10
0.008	7	0.018	16
0.008	3	0.018	7
0.008	4	0.018	8
0.008	5	0.018	12
0.008	7	0.018	16
0.008	8	0.018	18
0.008	9	0.018	19
0.008	8	0.018	18
0.008	4	0.018	9
0.008	5	0.018	11
0.008	5	0.018	11
0.008	3	0.018	6
0.008	3	0.018	6
0.008	2	0.018	5
0.008	5	0.018	12
0.005	1	0.003	1
0.005	3	0.003	2
0.005	1	0.003	0
0.005	1	0.003	0
0.005	1	0.003	1
0.005	1	0.003	0
0.005	1	0.003	1
0.005	1	0.003	1
0.005	1	0.003	1
0.005	2	0.003	1

MD % mix	# of Medium Truck each lane	HD % mix	# of Heavy Truck each lane
0.005	3	0.003	2
0.011	9	0.009	8
0.011	9	0.009	7
0.011	4	0.009	3
0.011	13	0.009	11
0.011	4	0.009	3
0.011	3	0.009	3
0.011	5	0.009	4
0.011	20	0.009	16
0.009	13	0.021	31
0.009	7	0.021	17
0.009	6	0.021	14
0.009	6	0.021	14
0.009	5	0.021	12
0.009	6	0.021	15
0.009	5	0.021	11
0.009	4	0.021	10
0.009	4	0.021	10
0.009	13	0.021	31
0.009	8	0.021	19
0.009	10	0.021	22
0.009	9	0.021	21
0.009	4	0.021	9
0.009	3	0.024	7
0.009	7	0.024	19
0.009	5	0.024	14
0.009	4	0.024	11
0.012	3	0.03	8
0.012	9	0.03	22
0.012	5	0.03	12
0.012	3	0.03	9
0.012	2	0.03	6
0.007	1	0.017	3
0.007	4	0.017	9
0.007	8	0.017	19
0.013	2	0.032	5
0.013	16	0.032	38
0.013	28	0.032	69
0.013	2	0.032	4
0.007	2	0.017	6
0.012	1	0.03	4

MD % mix	# of Medium Truck each lane	HD % mix	# of Heavy Truck each lane
0.012	7	0.03	17
0.012	5	0.03	12
0.012	15	0.03	37
0.012	3	0.03	8
0.009	9	0.024	25
0.009	12	0.024	32
0.009	5	0.024	14
0.009	5	0.021	13
0.009	7	0.021	16
0.009	5	0.021	11
0.009	9	0.021	20
0.009	12	0.021	29
0.009	7	0.021	16
0.009	8	0.021	20
0.009	3	0.021	8
0.009	11	0.021	26
0.009	8	0.021	19
0.009	9	0.021	21
0.009	2	0.021	6
0.009	6	0.021	13
0.009	7	0.021	16
0.009	17	0.021	39
0.011	12	0.009	10
0.011	2	0.009	2
0.011	4	0.009	3
0.011	4	0.009	3
0.011	4	0.009	3
0.011	7	0.009	6
0.011	8	0.009	7
0.011	4	0.009	3
0.008	2	0.013	3
0.008	8	0.013	13
0.008	7	0.013	12
0.007	8	0.023	27
0.007	2	0.023	6
0.007	2	0.023	6
0.007	3	0.023	10
0.007	7	0.023	24
0.007	3	0.023	9
0.008	10	0.013	16
0.008	8	0.013	12
0.008	4	0.013	6
0.008	4	0.013	7

MD % mix	# of Medium Truck each lane	HD % mix	# of Heavy Truck each lane
0.008	5	0.013	9
0.011	15	0.009	12
0.005	2	0.003	1
0.005	0	0.003	0
0.005	0	0.003	0
0.005	0	0.003	0
0.005	1	0.003	0
0.005	0	0.003	0
0.005	0	0.003	0
0.005	1	0.003	0
0.005	1	0.003	1
0.005	1	0.003	0
0.008	1	0.018	1
0.008	0	0.018	1
0.008	4	0.018	9
0.008	1	0.018	2
0.008	1	0.018	2
0.008	3	0.018	6
0.008	1	0.018	2
0.01	2	0.024	5
0.007	5	0.023	18
0.007	2	0.023	6
0.007	13	0.023	42
0.016	2	0.01	1
0.016	3	0.01	2
0.005	3	0.003	2
0.005	2	0.003	1
0.005	3	0.003	2
0.005	2	0.003	1
0.005	2	0.003	1
0.005	2	0.003	1
0.005	2	0.003	1
0.005	3	0.003	2
0.005	2	0.003	1
0.005	1	0.003	0
0.005	1	0.003	0
0.005	1	0.003	1
0.005	3	0.003	2

MD % mix	# of Medium Truck each lane	HD % mix	# of Heavy Truck each lane
0.005	1	0.003	1
0.005	3	0.003	2
0.005	1	0.003	1
0.005	1	0.003	1
0.005	1	0.003	1
0.005	1	0.003	1
0.005	2	0.003	1
0.005	1	0.003	1
0.005	1	0.003	1
0.005	1	0.003	0
0.005	0	0.003	0
0.005	0	0.003	0
0.005	1	0.003	0
0.005	2	0.003	1
0.005	1	0.003	1
0.005	2	0.003	1
0.005	0	0.003	0
0.005	1	0.003	0
0.008	2	0.018	4
0.008	3	0.018	6
0.008	1	0.018	3
0.008	2	0.018	4
0.008	1	0.018	3
0.008	1	0.018	2
0.008	1	0.018	2
0.008	3	0.018	8
0.008	2	0.018	5
0.008	1	0.018	3
0.008	3	0.018	6
0.008	3	0.018	7
0.008	3	0.018	8
0.008	4	0.018	9
0.008	4	0.018	9
0.008	2	0.018	5
0.008	8	0.018	18
0.008	7	0.018	16
0.008	4	0.018	9

MD % mix	# of Medium Truck each lane	HD % mix	# of Heavy Truck each lane
0.008	5	0.018	11
0.008	7	0.018	15
0.008	4	0.018	10
0.008	5	0.018	12
0.008	5	0.018	11
0.008	4	0.018	9
0.008	2	0.018	5
0.008	2	0.018	5
0.008	2	0.018	5
0.008	6	0.018	14
0.008	8	0.018	18
0.008	5	0.018	12
0.008	3	0.018	6
0.008	3	0.018	6
0.008	3	0.018	8
0.008	5	0.018	12
0.008	3	0.018	8
0.008	1	0.018	3
0.008	1	0.018	2
0.008	4	0.018	10
0.008	7	0.018	16
0.01	0	0.024	0
0.01	1	0.024	2
0.01	2	0.024	4
0.01	2	0.024	4
0.01	1	0.024	3
0.01	0	0.024	1
0.01	3	0.024	7
0.01	2	0.024	5
0.01	5	0.024	11
0.01	6	0.024	15
0.01	4	0.024	9
0.01	3	0.024	8
0.005	0	0.012	0
0.005	1	0.012	2
0.005	1	0.012	3
0.005	2	0.012	4

MD % mix	# of Medium Truck each lane	HD % mix	# of Heavy Truck each lane
0.005	2	0.012	4
0.005	0	0.012	1
0.005	7	0.012	16
0.005	4	0.012	10
0.005	3	0.012	7
0.005	2	0.012	6
0.005	4	0.012	9
0.005	3	0.012	8

Loop 1604 Existing Condition 2018 PM TNM Roadway Segment	Speed mph	PM Peak	# Lanes	DHV per lane	LD % mix	# of Auto each lane	MD % mix
Loop 1604 Mainlanes							
1604 ebml w of Braun OR	70	1971	2	985.5	0.98	966	0.011
1604 ebml Braun OR to Bandera OR	70	2464	2	1,232.0	0.98	1,207	0.011
1604 ebml Bandera OR to Haus OFR	70	3268	2	1,634.0	0.98	1,601	0.011
1604 ebml Haus OFR to KSP OR 2	70	2634	2	1,317.0	0.98	1,291	0.011
1604 ebml Haus OFR to KSP OR	70	2634	2	1,317.0	0.98	1,291	0.011
1604 ebml Babcock OFR to Brenan OFR	70	2808	2	1,404.0	0.98	1,376	0.011
1604 ebml Brenan OFR to JP OR	70	2410	2	1,205.0	0.98	1,181	0.011
1604 ebml 10FR OFR to DC OFR	70	2942	2	1,471.0	0.98	1,442	0.011
1604 ebml at IH10	70	1429	2	714.5	0.98	700	0.011
1604 ebml DC OR to 10FR OR	70	2229	2	1,114.5	0.97	1,081	0.009
1604 ebml 10FR OR to LS OFR	70	3232	3	1,077.3	0.97	1,045	0.009
1604 ebml btw LS ramps	70	2902	2	1,451.0	0.97	1,407	0.009
1604 ebml Mil OFR to Bitters OFR	70	3611	2	1,805.5	0.97	1,751	0.009
1604 ebml Bitters OFR to Mil OR	70	2958	2	1,479.0	0.97	1,435	0.009
1604 ebml Mil OR to Bitters OR	70	3808	2	1,904.0	0.97	1,847	0.009
1604 ebml Bitters OR to Blanco OFR	70	4345	2	2,172.5	0.97	2,107	0.009
1604 ebml btw Blanco ramps	70	3566	2	1,783.0	0.97	1,730	0.009
1604 ebml Blanco OR to Voigt OFR	70	4681	3	1,560.3	0.97	1,514	0.009
1604 ebml Voigt OFR to 281FR OFR	70	4174	3	1,391.3	0.97	1,350	0.009
1604 ebml 281FR OFR to 281DC OFR	70	3320	3	1,106.7	0.97	1,073	0.009
1604 ebml 281DC OFR to Voight OR	70	2431	2	1,215.5	0.97	1,179	0.009
1604 ebml at US281	70	3075	2	1,537.5	0.97	1,491	0.009
1604 ebml GC OFR to 281DC OR	70	2598	2	1,299.0	0.967	1,256	0.009
1604 ebml 281DC OR to GC OR	70	3622	3	1,207.3	0.967	1,167	0.009
1604 ebml btw Redl ramps 3ln	70	3530	3	1,176.7	0.967	1,138	0.009
1604 ebml btw Redl ramps 2ln	70	3530	2	1,765.0	0.967	1,707	0.009
1604 ebml Redl OR to Bulv OFR	70	4060	2	2,030.0	0.967	1,963	0.009
1604 ebml btw Bulv ramps	70	3282	2	1,641.0	0.958	1,572	0.012
1604 ebml OC OR to Jud OFR	70	3878	2	1,939.0	0.958	1,858	0.012
1604 ebml btw Jud ramps	70	3359	2	1,679.5	0.958	1,609	0.012
1604 ebml Jud OR to GMT OFR	70	3660	2	1,830.0	0.958	1,753	0.012
1604 ebml btw GMT ramps	70	3502	2	1,751.0	0.958	1,677	0.012
1604 ebml Nac OFR to LO OFR	65	3419	2	1,709.5	0.958	1,638	0.012
1604 ebml RB OFR to LO OR	65	3991	2	1,995.5	0.976	1,948	0.007
1604 ebml LO OR to I35DC OFR	65	4431	3	1,477.0	0.976	1,442	0.007
1604 ebml at I35	65	1773	2	886.5	0.955	847	0.013
1604 wbml at I35	65	1764	2	882.0	0.955	842	0.013
1604 wbml I35DC OR to LO OFR	65	3917	2	1,958.5	0.976	1,911	0.007
1604 wbml LO OFR to Nac OFR	65	3539	2	1,769.5	0.976	1,727	0.007
1604 wbml LO OR to Nac OR	70	3070	2	1,535.0	0.958	1,471	0.012
1604 wbml btw GMT ramps	70	3127	2	1,563.5	0.958	1,498	0.012
1604 wbml GMT OR to Jud OFR	70	3361	2	1,680.5	0.958	1,610	0.012
1604 wbml btw Jud ramps	70	3165	2	1,582.5	0.958	1,516	0.012

Loop 1604 Existing Condition 2018 PM TNM Roadway Segment	Speed mph	PM Peak	# Lanes	DHV per lane	LD % mix	# of Auto each lane	MD % mix
1604 wbml Jud OR to Vul OFR	70	3570	2	1,785.0	0.958	1,710	0.012
1604 wbml Vul OR to Bulv OR	70	2878	2	1,439.0	0.958	1,379	0.012
1604 wbml Bulv OR to Redl OFR	70	3694	2	1,847.0	0.967	1,786	0.009
1604 wbml btw Redl ramps	70	3207	2	1,603.5	0.967	1,551	0.009
1604 wbml Redl OR to 281DC OFR	70	3819	3	1,273.0	0.967	1,231	0.009
1604 wbml 281DC OFR to 281FR OFR	70	2719	2	1,359.5	0.967	1,315	0.009
1604 wbml at US281	70	2249	2	1,124.5	0.97	1,091	0.009
1604 wbml SOP OFR to 281DC OR	70	1804	2	902.0	0.97	875	0.009
1604 wbml 281DC OR to 281FR OR	70	2917	3	972.3	0.97	943	0.009
1604 wbml 281FR OR to Blanco OFR	70	4258	3	1,419.3	0.97	1,377	0.009
1604 wbml Blanco OFR to SOP OR	70	2821	2	1,410.5	0.97	1,368	0.009
1604 wbml SOP OR to Blanco OR	70	3524	2	1,762.0	0.97	1,709	0.009
1604 wbml Blanco OR to Rog OFR	70	3957	3	1,319.0	0.97	1,279	0.009
1604 wbml Rog OFR to Mil OFR	70	3408	2	1,704.0	0.97	1,653	0.009
1604 wbml Mil OFR to Rog OR	70	2171	2	1,085.5	0.97	1,053	0.009
1604 wbml Rog OR to Mil OR	70	2794	2	1,397.0	0.97	1,355	0.009
1604 wbml Mil OR to LS OFR	70	3444	3	1,148.0	0.97	1,114	0.009
1604 wbml btw LS ramps	70	3144	2	1,572.0	0.97	1,525	0.009
1604 wbml LS OR to 10FR OFR	70	4088	3	1,362.7	0.97	1,322	0.009
1604 wbml 10FR OFR to 10DC OFR	70	3072	3	1,024.0	0.97	993	0.009
1604 wbml at IH10	70	1586	2	793.0	0.98	777	0.011
1604 wbml 10FR OR to Bab OFR	70	2899	2	1,449.5	0.98	1,421	0.011
1604 wbml btw Bab ramps	70	2665	2	1,332.5	0.98	1,306	0.011
1604 wbml KS OFR to 1560 OR	70	2889	2	1,444.5	0.98	1,416	0.011
1604 wbml KS OFR to 1560 OR 2	70	2889	2	1,444.5	0.98	1,416	0.011
1604 wbml 1560 OR to Bandera OFR	70	3914	2	1,957.0	0.98	1,918	0.011
1604 wbml Bandera OFR to Braun OFR	70	3265	2	1,632.5	0.98	1,600	0.011
1604 wbml w of Braun OFR	70	2325	2	1,162.5	0.98	1,139	0.011
IH 10 / Frontage Roads							
I10 nbml s of de Zavala OR	65	4501	4	1,125.3	0.979	1,102	0.008
I10 nbml s of OFR to 1604 FR	65	5340	5	1,068.0	0.979	1,046	0.008
I10 nbml 1604 OFR to UTSA OR	65	4187	4	1,046.8	0.979	1,025	0.008
I10 nbml n of UTSA OR	65	4495	3	1,498.3	0.979	1,467	0.008
I10 nbml 1604 to DC OR	70	2737	3	912.3	0.97	885	0.007
I10 nbml DC OR to LC OFR	70	4006	4	1,001.5	0.97	971	0.007
I10 nbml LC OFR to 1604FR OR	70	2560	3	853.3	0.97	828	0.007
I10 sbml 1604FR OFR to LC OR	65	3276	3	1,092.0	0.97	1,059	0.007
I10 sbml LC OR to DC OFR	65	4032	4	1,008.0	0.97	978	0.007
I10 sbml n of 1604	65	3328	3	1,109.3	0.97	1,076	0.007
I10 sbml n of 1604FR OR	65	5288	3	1,762.7	0.979	1,726	0.008
I10 sbml 1604FR OR to UTSA OFR	65	6027	4	1,506.8	0.979	1,475	0.008
I10 sbml s of UTSA OFR	65	5406	4	1,351.5	0.979	1,323	0.008
I10 sbml s of de Zav OFR	65	4666	4	1,166.5	0.979	1,142	0.008

Loop 1604 Existing Condition 2018 PM TNM Roadway Segment	Speed mph	PM Peak	# Lanes	DHV per lane	LD % mix	# of Auto each lane	MD % mix
I10 nbfr s of de Zavala OR	50	3036	3	1,012.0	0.974	986	0.016
I10 nbfr s of UTSA	50	2197	3	732.3	0.974	713	0.016
I10 nbfr UTSA to OR	50	784	3	261.3	0.974	255	0.016
I10 nbfr OR to 1604 OFR 3 ln	50	231	3	77.0	0.974	75	0.016
I10 nbfr OR to 1604 OFR 2ln	50	231	2	115.5	0.974	112	0.016
I10 nbfr OFR to 1604 ebfr	50	1384	3	461.3	0.974	449	0.016
I10 nbfr 1604 wbfr to OR	50	1098	2	549.0	0.974	535	0.016
I10 nbfr OR to LC OFR 2ln	50	453	2	226.5	0.974	221	0.016
I10 nbfr OR to LC OFR 1ln	50	453	1	453.0	0.974	441	0.016
I10 nbfr OFR to LC	50	2153	3	717.7	0.974	699	0.016
I10 sbfr LC to OR	50	1086	3	362.0	0.974	353	0.01
I10 sbfr OR to 1604 OFR	50	330	2	165.0	0.974	161	0.01
I10 sbfr OFR to 1604 wbfr	50	712	2	356.0	0.974	347	0.01
I10 sbfr OR to UTSA OFR 3ln	50	480	3	160.0	0.974	156	0.016
I10 sbfr OR to UTSA OFR 2ln	50	480	2	240.0	0.974	234	0.016
I10 sbfr OFR to UTSA	50	1101	4	275.3	0.974	268	0.016
I10 sbfr s of UTSA	50	2264	2	1,132.0	0.974	1,103	0.016
I10 nbml n of 1604FR OR 3ln	70	1125	3	375.0	0.97	364	0.007
I10 nbml n of 1604FR OR 2ln	70	1125	2	562.5	0.97	546	0.007
I10 sbml n of SumOaks OR 2ln	70	2986	2	1,493.0	0.97	1,448	0.007
I10 sbml n of SumOaks OR 3ln	70	2986	3	995.3	0.97	965	0.007
I10 sbml n of 1604FR OFR	70	3658	4	914.5	0.97	887	0.007
I10 nbfr LC to CB OFR	50	1856	2	928.0	0.974	904	0.016
I10 nbfr CB OFR to LC OR	50	3548	3	1,182.7	0.974	1,152	0.016
I10 nbfr n of LC OR	50	2309	3	769.7	0.974	750	0.016
I10 sbfr n of SumOaks OR	50	1085	3	361.7	0.974	352	0.016
I10 sbfr SumOaks OR to LC	50	753	3	251.0	0.974	244	0.016
LP 1604 Frontage Road							
1604 ebfr w of Bandera (2ln)	45	1679	2	839.5	0.992	833	0.005
1604 ebfr w of Bandera (3ln)	45	1679	3	559.7	0.992	555	0.005
1604 ebfr Bandera to OR	45	1771	2	885.5	0.992	878	0.005
1604 ebfr Bandera OR to Haus	45	1079	2	539.5	0.992	535	0.005
1604 ebfr Haus to KSP	45	795	2	397.5	0.992	394	0.005
1604 ebfr KSP to Bab OFR	45	265	2	132.5	0.992	131	0.005
1604 ebfr OFR to Babcock	45	638	3	212.7	0.992	211	0.005
1604 ebfr Bab to Bren OFR	45	697	3	232.3	0.992	230	0.005
1604 ebfr OFR to Brenan	45	1095	4	273.8	0.992	272	0.005
1604 ebfr Brenan to JP	45	1106	4	276.5	0.992	274	0.005
1604 ebfr JP to OR	45	1527	3	509.0	0.992	505	0.005
1604 ebfr JP OR to 10FR OFR	45	508	2	254.0	0.992	252	0.005
1604 ebfr 10FR OFR to 10sbfr	45	1576	2	788.0	0.992	782	0.005
1604 ebfr 10FR OR to VJ	45	763	2	381.5	0.974	372	0.008
1604 ebfr VJ to Trade	45	1437	2	718.5	0.974	700	0.008

Loop 1604 Existing Condition 2018 PM TNM Roadway Segment	Speed mph	PM Peak	# Lanes	DHV per lane	LD % mix	# of Auto each lane	MD % mix
1604 ebfr Trade to LS OFR	45	1452	2	726.0	0.974	707	0.008
1604 ebfr OFR to LS	45	1782	2	891.0	0.974	868	0.008
1604 ebfr LS to OR	45	1944	2	972.0	0.974	947	0.008
1604 ebfr OR to Mil OFR	45	981	2	490.5	0.974	478	0.008
1604 ebfr OFR to Mil	45	1235	2	617.5	0.974	601	0.008
1604 ebfr Mil to Bitters OFR	55	1404	2	702.0	0.974	684	0.008
1604 ebfr OFR to Mil OR	55	2227	3	742.3	0.974	723	0.008
1604 ebfr OR to Bitters	55	1377	2	688.5	0.974	671	0.008
1604 ebfr Bitters to OR	55	1263	2	631.5	0.974	615	0.008
1604 ebfr OR to Hueb	55	726	2	363.0	0.974	354	0.008
1604 ebfr Hueb to Blanco OFR	55	508	2	254.0	0.974	247	0.008
1604 ebfr OFR to Blanco	55	1371	2	685.5	0.974	668	0.008
1604 ebfr Blanco to OR	55	1311	2	655.5	0.974	638	0.008
1604 ebfr OR to Voight	55	374	2	187.0	0.974	182	0.008
1604 ebfr Voight to 281FR OFR	45	1496	2	748.0	0.974	729	0.008
1604 ebfr OFR to Voight OR	45	2839	3	946.3	0.974	922	0.008
1604 ebfr Voight OR to 281 sbfr	45	2195	3	731.7	0.974	713	0.008
1604 ebfr 281 nbfr to GC OFR	45	1751	2	875.5	0.966	846	0.01
1604 ebfr OFR to GC	45	1914	3	638.0	0.966	616	0.01
1604 ebfr GC to OR	55	1556	2	778.0	0.966	752	0.01
1604 ebfr OR to Redl	55	822	2	411.0	0.966	397	0.01
1604 ebfr Redl to OR	55	1590	2	795.0	0.983	781	0.005
1604 ebfr OR to Bulv OFR	55	1060	2	530.0	0.983	521	0.005
1604 ebfr OFR to Bulv	55	1838	3	612.7	0.983	602	0.005
1604 ebfr Bulv to OR	55	1152	2	576.0	0.983	566	0.005
1604 ebfr OR to Jud OFR 2ln	55	157	2	78.5	0.983	77	0.005
1604 ebfr OR to Jud OFR 1ln	55	157	1	157.0	0.983	154	0.005
1604 ebfr OFR to Jud	55	676	2	338.0	0.983	332	0.005
1604 ebfr Jud to OR	55	406	2	203.0	0.983	200	0.005
1604 ebfr OR to GMT OFR 2ln	55	155	2	77.5	0.983	76	0.005
1604 ebfr OR to GMT OFR 1ln	55	155	1	155.0	0.983	152	0.005
1604 ebfr OFR to Nac	45	769	2	384.5	0.983	378	0.005
1604 ebfr LO OR to RBP OFR	45	319	2	159.5	0.988	158	0.004
1604 ebfr OFR to I35DC OR	45	355	2	177.5	0.988	175	0.004
1604 ebfr I35DC OR to RBP	40	131	2	65.5	0.988	65	0.004
1604 wbfr GW to I35DC OFR	45	454	2	227.0	0.988	224	0.004
1604 wbfr OFR to LO OFR	45	795	2	397.5	0.988	393	0.004
1604 wbfr OFR to LO	45	1173	2	586.5	0.988	579	0.004
1604 wbfr Nac to OR	45	725	2	362.5	0.983	356	0.005
1604 wbfr OR to Jud OFR 2ln	55	145	2	72.5	0.983	71	0.005
1604 wbfr OR to Jud OFR 1ln	55	145	1	145.0	0.983	143	0.005
1604 wbfr OFR to Jud	55	341	2	170.5	0.983	168	0.005
1604 wbfr Jud to OR	55	509	2	254.5	0.983	250	0.005
1604 wbfr OR to Vulc OFR	55	104	2	52.0	0.983	51	0.005

Loop 1604 Existing Condition 2018 PM TNM Roadway Segment	Speed mph	PM Peak	# Lanes	DHV per lane	LD % mix	# of Auto each lane	MD % mix
1604 wbfr OR to Bulv	55	1137	2	568.5	0.983	559	0.005
1604 wbfr Bulv to OR	55	1272	2	636.0	0.983	625	0.005
1604 wbfr OR to Redl OFR 2ln	55	456	2	228.0	0.983	224	0.005
1604 wbfr OR to Redl OFR 1ln	55	456	1	456.0	0.983	448	0.005
1604 wbfr OFR to Redl	55	943	2	471.5	0.983	463	0.005
1604 wbfr Redl to OR	55	1013	2	506.5	0.966	489	0.01
1604 wbfr OR to CBC	45	401	2	200.5	0.966	194	0.01
1604 wbfr CBC to 281 nbfr OFR	45	704	2	352.0	0.966	340	0.01
1604 wbfr OFR to 281 nbfr	45	1174	3	391.3	0.966	378	0.01
1604 wbfr 281 sbfr to SOP OFR	45	2103	2	1,051.5	0.974	1,024	0.008
1604 wbfr OR to SOP	45	1551	3	517.0	0.974	504	0.008
1604 wbfr SOP to OFR	55	1387	2	693.5	0.974	675	0.008
1604 wbfr OFR to SOP OR	55	2459	3	819.7	0.974	798	0.008
1604 wbfr OR to Blanco	55	1756	3	585.3	0.974	570	0.008
1604 wbfr Blanco to OR	55	1252	2	626.0	0.974	610	0.008
1604 wbfr OR to Hueb	55	542	2	271.0	0.974	264	0.008
1604 wbfr Hueb to OFR	55	557	2	278.5	0.974	271	0.008
1604 wbfr OFR to RogR	55	1106	2	553.0	0.974	539	0.008
1604 wbfr RogR to OFR	55	1156	2	578.0	0.974	563	0.008
1604 wbfr OFR to RogR OR	55	2393	3	797.7	0.974	777	0.008
1604 wbfr OR to Mil	55	1533	2	766.5	0.974	747	0.008
1604 wbfr Mil to OR	45	1842	2	921.0	0.974	897	0.008
1604 wbfr OR to LS OFR	45	1192	2	596.0	0.974	581	0.008
1604 wbfr OFR to LS	45	1492	2	746.0	0.974	727	0.008
1604 wbfr LS to OR	45	2026	2	1,013.0	0.974	987	0.008
1604 wbfr OR to Trade	45	1082	2	541.0	0.974	527	0.008
1604 wbfr Trade to VJ	45	1216	2	608.0	0.974	592	0.008
1604 wbfr VJ to OFR	45	763	2	381.5	0.974	372	0.008
1604 wbfr OFR to 10 nbfr	45	1779	2	889.5	0.974	866	0.008
1604 wbfr 10 sbfr to 10DC OFR	45	1429	2	714.5	0.992	709	0.005
1604 wbfr OFR to LC	45	1548	3	516.0	0.992	512	0.005
1604 wbfr LC to CH	45	1528	3	509.3	0.992	505	0.005
1604 wbfr CH to Babcock	45	1817	2	908.5	0.992	901	0.005
1604 wbfr Babcock to OR	45	2145	3	715.0	0.992	709	0.005
1604 wbfr OR to KSP	45	1298	2	649.0	0.992	644	0.005
1604 wbfr KSP to 1560 2ln	45	1489	2	744.5	0.992	739	0.005
1604 wbfr KSP to 1560 3ln	45	1489	3	496.3	0.992	492	0.005
1604 wbfr 1560 to Bandera OFR	45	1418	2	709.0	0.992	703	0.005
1604 wbfr OFR to Bandera	45	2067	3	689.0	0.992	683	0.005
1604 wbfr Bandera to OFR	50	2045	2	1,022.5	0.992	1,014	0.005
Ramps							
EB 1604 Braun OR	50	493	1	493.0	0.98	483	0.011
EB 1604 Bandera OR	50	804	1	804.0	0.98	788	0.011

Loop 1604 Existing Condition 2018 PM

TNM Roadway Segment	Speed mph	PM Peak	# Lanes	DHV per lane	LD % mix	# of Auto each lane	MD % mix
EB Hausman OFR	40	634	1	634.0	0.98	621	0.011
EB KSP OR	50	547	1	547.0	0.98	536	0.011
EB Babcock OFR	40	373	1	373.0	0.98	366	0.011
EB Brenan OFR	50	398	1	398.0	0.98	390	0.011
EB 10FR OFR	40	487	1	487.0	0.98	477	0.011
EB 10DC OFR	40	1513	1	1,513.0	0.98	1,483	0.011
EB 10DC OR	40	800	1	800.0	0.97	776	0.009
EB 10FR OR	50	1003	1	1,003.0	0.97	973	0.009
EB LS OFR	40	330	1	330.0	0.97	320	0.009
EB LS OR	50	963	1	963.0	0.97	934	0.009
EB Mil OFR	50	254	1	254.0	0.97	246	0.009
EB Bitters OFR	40	653	1	653.0	0.97	633	0.009
EB Mil OR	50	850	1	850.0	0.97	825	0.009
EB Bitters OR	50	537	1	537.0	0.97	521	0.009
EB Blanco OFR	50	779	1	779.0	0.97	756	0.009
EB Blanco OR	50	1115	1	1,115.0	0.97	1,082	0.009
EB Voight OFR	40	507	1	507.0	0.97	492	0.009
EB 281FR OFR	40	854	1	854.0	0.97	828	0.009
EB 281DC OFR	40	889	1	889.0	0.97	862	0.009
EB Voight OR	50	644	1	644.0	0.97	625	0.009
EB GC OFR	50	477	1	477.0	0.967	461	0.009
EB 281DC OR	40	1024	1	1,024.0	0.967	990	0.009
EB GC OR	50	734	1	734.0	0.967	710	0.009
EB Redl OFR	40	826	1	826.0	0.967	799	0.009
EB Redl OR	50	530	1	530.0	0.958	508	0.012
EB Bulv OFR	40	778	1	778.0	0.958	745	0.012
EB Jud OFR	40	519	1	519.0	0.958	497	0.012
EB Jud OR	50	301	1	301.0	0.958	288	0.012
EB GMT OFR	40	158	1	158.0	0.958	151	0.012
EB RB OFR	50	36	1	36.0	0.976	35	0.007
EB LO OR	50	440	1	440.0	0.976	429	0.007
EB I35DC OFR	40	2658	2	1,329.0	0.976	1,297	0.007
EB I35DC OR from FR	40	224	1	224.0	0.955	214	0.013
EB I35DC	40	2882	2	1,441.0	0.955	1,376	0.013
WB I35DC OR	40	2153	1	2,153.0	0.955	2,056	0.013
WB I35DC OFR	40	341	1	341.0	0.955	326	0.013
WB LO OFR	40	378	1	378.0	0.976	369	0.007
WB GMT OR	50	234	1	234.0	0.958	224	0.012
WB Jud OFR	40	196	1	196.0	0.958	188	0.012
WB Jud OR	50	405	1	405.0	0.958	388	0.012
WB Bulv OR	50	816	1	816.0	0.958	782	0.012
WB Redl OFR	40	487	1	487.0	0.958	467	0.012
WB Redl OR	50	612	1	612.0	0.967	592	0.009
WB 281DC OFR	40	1100	1	1,100.0	0.967	1,064	0.009

Loop 1604 Existing Condition 2018 PM

TNM Roadway Segment	Speed mph	PM Peak	# Lanes	DHV per lane	LD % mix	# of Auto each lane	MD % mix
WB 281FR OFR	40	470	1	470.0	0.967	454	0.009
NBWB 281DC	40	1835	2	917.5	0.97	890	0.009
WB SOP OFR	40	445	1	445.0	0.97	432	0.009
WB 281DC OR	40	1113	1	1,113.0	0.97	1,080	0.009
WB 281FR OR	50	1341	1	1,341.0	0.97	1,301	0.009
WB Blanco OFR	50	1437	1	1,437.0	0.97	1,394	0.009
WB SOP OR	50	703	1	703.0	0.97	682	0.009
WB Blanco OR	50	433	1	433.0	0.97	420	0.009
WB Rog OFR	40	549	1	549.0	0.97	533	0.009
WB Mil OFR	40	1237	1	1,237.0	0.97	1,200	0.009
WB Rog OR	50	623	1	623.0	0.97	604	0.009
WB Mil OR	50	650	1	650.0	0.97	631	0.009
WB LS OFR	40	300	1	300.0	0.97	291	0.009
WB LS OR	50	944	1	944.0	0.97	916	0.009
WB 10FR OFR	40	1016	1	1,016.0	0.97	986	0.009
WB 10DC OFR	40	1486	1	1,486.0	0.97	1,441	0.009
WB 10DC OR	40	719	1	719.0	0.98	705	0.011
WB 10DC OFR to FR	40	713	1	713.0	0.98	699	0.011
WB Babcock OFR	40	234	1	234.0	0.98	229	0.011
WB Babcock OR	50	847	1	847.0	0.98	830	0.011
WB KS OFR	40	623	1	623.0	0.98	611	0.011
WB 1560 OR	50	1025	1	1,025.0	0.98	1,005	0.011
WB Bandera OFR	40	649	1	649.0	0.98	636	0.011
WB Braun OFR	45	940	1	940.0	0.98	921	0.011
10NB UTSA OR	40	308	1	308.0	0.979	302	0.008
10NB 1604FR OFR	50	1153	1	1,153.0	0.979	1,129	0.008
10NB DC OFR	40	1758	2	879.0	0.979	861	0.008
10NB DC OR	40	1269	1	1,269.0	0.97	1,231	0.007
10NB 1604FR OR	50	645	1	645.0	0.97	626	0.007
10NB LC OFR	40	1446	2	723.0	0.97	701	0.007
10SB 1604FR OFR	40	382	1	382.0	0.97	371	0.007
10SB DC OFR	40	704	1	704.0	0.97	683	0.007
10SB LC OR	50	756	1	756.0	0.97	733	0.007
10SB DC OR	40	1960	2	980.0	0.979	959	0.008
10SB 1604FR OR	50	739	1	739.0	0.979	723	0.008
10SB UTSA OFR	50	621	1	621.0	0.979	608	0.008
10SB de Zavala OFR	45	740	1	740.0	0.979	724	0.008
10NB de Zavala OR	45	839	1	839.0	0.979	821	0.008
WB 10DC W	40	1432	1	1,432.0	0.98	1,403	0.011
LC ETA	25	268	1	268.0	0.992	266	0.005
LC WTA	25	12	1	12.0	0.992	12	0.005
Brenan ETA	25	40	1	40.0	0.992	40	0.005
Brenan WTA	25	85	1	85.0	0.992	84	0.005
Babcock ETA	25	45	1	45.0	0.992	45	0.005

Loop 1604 Existing Condition 2018 PM

TNM Roadway Segment	Speed mph	PM Peak	# Lanes	DHV per lane	LD % mix	# of Auto each lane	MD % mix
Babcock WTA	25	94	1	94.0	0.992	93	0.005
1560 ETA	25	17	1	17.0	0.992	17	0.005
1560 WTA	25	352	1	352.0	0.992	349	0.005
Bandera ETA	25	502	1	502.0	0.992	498	0.005
Bandera WTA	25	300	1	300.0	0.992	298	0.005
LS ETA	25	70	1	70.0	0.974	68	0.008
LS WTA	25	37	1	37.0	0.974	36	0.008
Mil ETA	25	153	1	153.0	0.974	149	0.008
Blanco ETA	25	150	1	150.0	0.974	146	0.008
Blanco WTA	25	229	1	229.0	0.974	223	0.008
SO ETA	25	534	1	534.0	0.974	520	0.008
SO WTA	25	258	1	258.0	0.974	251	0.008
GC WTA	25	310	1	310.0	0.966	299	0.01
10NB CB OFR	40	2080	1	2,080.0	0.97	2,018	0.007
10NB LC OR	50	1239	1	1,239.0	0.97	1,202	0.007
10SB SO OR	50	672	1	672.0	0.97	652	0.007
LC STA	25	152	1	152.0	0.974	148	0.016
LC NTA	25	237	1	237.0	0.974	231	0.016
Cross Streets							
SB Bandera n of 1604	45	1651	3	550.3	0.992	546	0.005
SB Bandera s of 1604	45	1624	3	541.3	0.992	537	0.005
SB Bandera at 1604	45	1759	3	586.3	0.992	582	0.005
NB Bandera n of 1604	45	1864	3	621.3	0.992	616	0.005
NB Bandera s of 1604	45	1907	4	476.8	0.992	473	0.005
NB Bandera at 1604	45	2152	4	538.0	0.992	534	0.005
SB 1560 n of 1604	45	637	3	212.3	0.992	211	0.005
SB Hausman s of 1604	45	841	2	420.5	0.992	417	0.005
SB Hausman at 1604	45	471	3	157.0	0.992	156	0.005
NB 1560 n of 1604	45	1145	2	572.5	0.992	568	0.005
NB Hausman s of 1604	45	1476	3	492.0	0.992	488	0.005
NB Hausman at 1604	45	1689	3	563.0	0.992	558	0.005
SB Babcock n of 1604	40	502	1	502.0	0.992	498	0.005
SB Babcock n of 1604 2 ln	40	502	2	251.0	0.992	249	0.005
SB Babcock s of 1604	40	536	1	536.0	0.992	532	0.005
SB Babcock at 1604	40	547	2	273.5	0.992	271	0.005
NB Babcock n of 1604	40	592	2	296.0	0.992	294	0.005
NB Babcock s of 1604	40	853	2	426.5	0.992	423	0.005
NB Babcock at 1604	40	916	2	458.0	0.992	454	0.005
SB CH n of 1604	30	338	1	338.0	0.992	335	0.005
SB Brennan s of 1604	20	250	2	125.0	0.992	124	0.005

Loop 1604 Existing Condition 2018 PM

TNM Roadway Segment	Speed mph	PM Peak	# Lanes	DHV per lane	LD % mix	# of Auto each lane	MD % mix
SB Brennan at 1604	30	288	2	144.0	0.992	143	0.005
NB CH n of 1604	30	248	1	248.0	0.992	246	0.005
NB Brennan s of 1604	20	469	2	234.5	0.992	233	0.005
NB Brennan at 1604	30	451	2	225.5	0.992	224	0.005
SB LC n of 1604	40	927	2	463.5	0.992	460	0.005
SB JP s of 1604	20	425	2	212.5	0.992	211	0.005
SB LC at 1604	40	673	3	224.3	0.992	223	0.005
NB LC n of 1604	40	697	2	348.5	0.992	346	0.005
NB JP s of 1604	20	596	3	198.7	0.992	197	0.005
NB LC at 1604	40	679	3	226.3	0.992	225	0.005
SB VJ n of 1604	40	805	2	402.5	0.974	392	0.008
SB VJ at 1604	40	954	2	477.0	0.974	465	0.008
SB VJ s of 1604	40	529	2	264.5	0.974	258	0.008
NB VJ s of 1604	40	811	2	405.5	0.974	395	0.008
NB VJ at 1604	40	562	2	281.0	0.974	274	0.008
NB VJ n of 1604	40	866	2	433.0	0.974	422	0.008
SB LS at 1604	35	80	2	40.0	0.974	39	0.008
SB LS s of 1604	35	382	2	191.0	0.974	186	0.008
NB LS s o 1604	35	988	2	494.0	0.974	481	0.008
NB LS at 1604	35	647	2	323.5	0.974	315	0.008
SB Mil n of 1604	45	536	2	268.0	0.974	261	0.008
SB Mil at 1604	45	631	2	315.5	0.974	307	0.008
SB Mil s of 1604	45	708	2	354.0	0.974	345	0.008
NB Mil s of 1604	45	1152	2	576.0	0.974	561	0.008
NB Mil at 1604	45	1059	2	529.5	0.974	516	0.008
NB Mil n of 1604	45	502	2	251.0	0.974	244	0.008
SB Rog n of 1604	30	495	1	495.0	0.974	482	0.008
SB Bit at 1604	30	712	1	712.0	0.974	693	0.008
SB Bit s of 1604	30	632	1	632.0	0.974	616	0.008
NB Bit s of 1604	30	792	1	792.0	0.974	771	0.008
NB Bit at 1604	30	986	1	986.0	0.974	960	0.008
NB Rog n of 1604	30	719	1	719.0	0.974	700	0.008
SB Hueb n of 1604	40	605	2	302.5	0.974	295	0.008
SB Hueb at 1604	40	543	2	271.5	0.974	264	0.008
SB Hueb s of 1604	40	477	2	238.5	0.974	232	0.008
NB Hueb s of 1604	40	850	2	425.0	0.974	414	0.008
NB Hueb at 1604	40	1134	2	567.0	0.974	552	0.008
NB Hueb n of 1604	40	1181	2	590.5	0.974	575	0.008

Loop 1604 Existing Condition 2018 PM

TNM Roadway Segment	Speed mph	PM Peak	# Lanes	DHV per lane	LD % mix	# of Auto each lane	MD % mix
SB Blanco n of 1604	45	1069	3	356.3	0.974	347	0.008
SB Blanco at 1604	45	1310	2	655.0	0.974	638	0.008
SB Blanco s of 1604	45	957	2	478.5	0.974	466	0.008
NB Blanco s of 1604	45	1189	3	396.3	0.974	386	0.008
NB Blanco at 1604	45	1523	2	761.5	0.974	742	0.008
NB Blanco n of 1604	45	1865	2	932.5	0.974	908	0.008
SB SO n of 1604	40	1200	2	600.0	0.974	584	0.008
SB SO at 1604	40	778	2	389.0	0.974	379	0.008
SB Voight s of 1604	25	208	1	208.0	0.974	203	0.008
NB Voight s of 1604	25	206	2	103.0	0.974	100	0.008
NB SO at 1604	40	437	2	218.5	0.974	213	0.008
NB SO n of 1604	40	747	2	373.5	0.974	364	0.008
SB CBC n of 1604	25	90	2	45.0	0.966	43	0.01
SB GC at 1604	30	336	2	168.0	0.966	162	0.01
SB GC s of 1604	30	600	2	300.0	0.966	290	0.01
NB GC s of 1604	30	488	2	244.0	0.966	236	0.01
NB GC at 1604	30	272	2	136.0	0.966	131	0.01
NB CBC n of 1604	25	33	1	33.0	0.966	32	0.01
SB Red n of 1604	40	738	2	369.0	0.966	356	0.01
SB Red at 1604	40	738	2	369.0	0.966	356	0.01
SB Red s of 1604	40	624	1	624.0	0.966	603	0.01
NB Red s of 1604	40	565	1	565.0	0.966	546	0.01
NB Red at 1604	40	737	2	368.5	0.966	356	0.01
NB Red n of 1604	40	667	2	333.5	0.966	322	0.01
SB Jud n of 1604	40	189	2	94.5	0.983	93	0.005
SB Jud at 1604	40	408	2	204.0	0.983	201	0.005
SB Jud s of 1604	40	729	2	364.5	0.983	358	0.005
NB Jud s of 1604	40	498	2	249.0	0.983	245	0.005
NB Jud at 1604	40	447	2	223.5	0.983	220	0.005
NB Jud n of 1604	40	60	2	30.0	0.983	29	0.005
SB Bulv n of 1604	45	1674	2	837.0	0.983	823	0.005
SB Bulv at 1604	40	1177	2	588.5	0.983	578	0.005
SB Bulv s of 1604	40	990	2	495.0	0.983	487	0.005
NB Bulv s of 1604	40	1302	2	651.0	0.983	640	0.005
NB Bulv at 1604	40	2175	2	1,087.5	0.983	1,069	0.005
NB Bulv n of 1604	45	2537	2	1,268.5	0.983	1,247	0.005

# of Medium Truck each lane	HD % mix	# of Heavy Truck each lane
11	0.009	9
14	0.009	11
18	0.009	15
14	0.009	12
14	0.009	12
15	0.009	13
13	0.009	11
16	0.009	13
8	0.009	6
10	0.021	23
10	0.021	23
13	0.021	30
16	0.021	38
13	0.021	31
17	0.021	40
20	0.021	46
16	0.021	37
14	0.021	33
13	0.021	29
10	0.021	23
11	0.021	26
14	0.021	32
12	0.024	31
11	0.024	29
11	0.024	28
16	0.024	42
18	0.024	49
20	0.03	49
23	0.03	58
20	0.03	50
22	0.03	55
21	0.03	53
21	0.03	51
14	0.017	34
10	0.017	25
12	0.032	28
11	0.032	28
14	0.017	33
12	0.017	30
18	0.03	46
19	0.03	47
20	0.03	50
19	0.03	47

# of Medium Truck each lane	HD % mix	# of Heavy Truck each lane
21	0.03	54
17	0.03	43
17	0.024	44
14	0.024	38
11	0.024	31
12	0.024	33
10	0.021	24
8	0.021	19
9	0.021	20
13	0.021	30
13	0.021	30
16	0.021	37
12	0.021	28
15	0.021	36
10	0.021	23
13	0.021	29
10	0.021	24
14	0.021	33
12	0.021	29
9	0.021	22
9	0.009	7
16	0.009	13
15	0.009	12
16	0.009	13
16	0.009	13
22	0.009	18
18	0.009	15
13	0.009	10
9	0.013	15
9	0.013	14
8	0.013	14
12	0.013	19
6	0.023	21
7	0.023	23
6	0.023	20
8	0.023	25
7	0.023	23
8	0.023	26
14	0.013	23
12	0.013	20
11	0.013	18
9	0.013	15

# of Medium Truck each lane	HD % mix	# of Heavy Truck each lane
16	0.01	10
12	0.01	7
4	0.01	3
1	0.01	1
2	0.01	1
7	0.01	5
9	0.01	5
4	0.01	2
7	0.01	5
11	0.01	7
4	0.01	4
2	0.01	2
4	0.01	4
3	0.01	2
4	0.01	2
4	0.01	3
18	0.01	11
3	0.023	9
4	0.023	13
10	0.023	34
7	0.023	23
6	0.023	21
15	0.01	9
19	0.01	12
12	0.01	8
6	0.01	4
4	0.01	3
4	0.003	3
3	0.003	2
4	0.003	3
3	0.003	2
2	0.003	1
1	0.003	0
1	0.003	1
1	0.003	1
1	0.003	1
1	0.003	1
3	0.003	2
1	0.003	1
4	0.003	2
3	0.018	7
6	0.018	13

# of Medium Truck each lane	HD % mix	# of Heavy Truck each lane
6	0.018	13
7	0.018	16
8	0.018	17
4	0.018	9
5	0.018	11
6	0.018	13
6	0.018	13
6	0.018	12
5	0.018	11
3	0.018	7
2	0.018	5
5	0.018	12
5	0.018	12
1	0.018	3
6	0.018	13
8	0.018	17
6	0.018	13
9	0.024	21
6	0.024	15
8	0.024	19
4	0.024	10
4	0.012	10
3	0.012	6
3	0.012	7
3	0.012	7
0	0.012	1
1	0.012	2
2	0.012	4
1	0.012	2
0	0.012	1
1	0.012	2
2	0.012	5
1	0.008	1
1	0.008	1
0	0.008	1
1	0.008	2
2	0.008	3
2	0.008	5
2	0.012	4
0	0.012	1
1	0.012	2
1	0.012	2
1	0.012	3
0	0.012	1

# of Medium Truck each lane	HD % mix	# of Heavy Truck each lane
3	0.012	7
3	0.012	8
1	0.012	3
2	0.012	5
2	0.012	6
5	0.024	12
2	0.024	5
4	0.024	8
4	0.024	9
8	0.018	19
4	0.018	9
6	0.018	12
7	0.018	15
5	0.018	11
5	0.018	11
2	0.018	5
2	0.018	5
4	0.018	10
5	0.018	10
6	0.018	14
6	0.018	14
7	0.018	17
5	0.018	11
6	0.018	13
8	0.018	18
4	0.018	10
5	0.018	11
3	0.018	7
7	0.018	16
4	0.003	2
3	0.003	2
3	0.003	2
5	0.003	3
4	0.003	2
3	0.003	2
4	0.003	2
2	0.003	1
4	0.003	2
3	0.003	2
5	0.003	3
5	0.009	4
9	0.009	7

# of Medium Truck each lane	HD % mix	# of Heavy Truck each lane
7	0.009	6
6	0.009	5
4	0.009	3
4	0.009	4
5	0.009	4
17	0.009	14
7	0.021	17
9	0.021	21
3	0.021	7
9	0.021	20
2	0.021	5
6	0.021	14
8	0.021	18
5	0.021	11
7	0.021	16
10	0.021	23
5	0.021	11
8	0.021	18
8	0.021	19
6	0.021	14
4	0.024	11
9	0.024	25
7	0.024	18
7	0.024	20
6	0.03	16
9	0.03	23
6	0.03	16
4	0.03	9
2	0.03	5
0	0.017	1
3	0.017	7
9	0.017	23
3	0.032	7
19	0.032	46
28	0.032	69
4	0.032	11
3	0.017	6
3	0.03	7
2	0.03	6
5	0.03	12
10	0.03	24
6	0.03	15
6	0.024	15
10	0.024	26

# of Medium Truck each lane	HD % mix	# of Heavy Truck each lane
4	0.024	11
8	0.021	19
4	0.021	9
10	0.021	23
12	0.021	28
13	0.021	30
6	0.021	15
4	0.021	9
5	0.021	12
11	0.021	26
6	0.021	13
6	0.021	14
3	0.021	6
8	0.021	20
9	0.021	21
13	0.021	31
8	0.009	6
8	0.009	6
3	0.009	2
9	0.009	8
7	0.009	6
11	0.009	9
7	0.009	6
10	0.009	8
2	0.013	4
9	0.013	15
7	0.013	11
9	0.023	29
5	0.023	15
5	0.023	17
3	0.023	9
5	0.023	16
5	0.023	17
8	0.013	13
6	0.013	10
5	0.013	8
6	0.013	10
7	0.013	11
16	0.009	13
1	0.003	1
0	0.003	0
0	0.003	0
0	0.003	0
0	0.003	0

# of Medium Truck each lane	HD % mix	# of Heavy Truck each lane
0	0.003	0
0	0.003	0
2	0.003	1
3	0.003	2
2	0.003	1
1	0.018	1
0	0.018	1
1	0.018	3
1	0.018	3
2	0.018	4
4	0.018	10
2	0.018	5
3	0.024	7
15	0.023	48
9	0.023	28
5	0.023	15
2	0.01	2
4	0.01	2
3	0.003	2
3	0.003	2
3	0.003	2
3	0.003	2
2	0.003	1
3	0.003	2
1	0.003	1
2	0.003	1
1	0.003	0
3	0.003	2
2	0.003	1
3	0.003	2
3	0.003	2
1	0.003	1
3	0.003	2
1	0.003	1
1	0.003	1
2	0.003	1
2	0.003	1
2	0.003	1
1	0.003	0

# of Medium Truck each lane	HD % mix	# of Heavy Truck each lane
1	0.003	0
1	0.003	1
1	0.003	1
1	0.003	1
2	0.003	1
1	0.003	1
1	0.003	1
2	0.003	1
1	0.003	1
1	0.003	1
3	0.018	7
4	0.018	9
2	0.018	5
3	0.018	7
2	0.018	5
3	0.018	8
0	0.018	1
2	0.018	3
4	0.018	9
3	0.018	6
2	0.018	5
3	0.018	6
3	0.018	6
5	0.018	10
4	0.018	10
2	0.018	5
4	0.018	9
6	0.018	13
5	0.018	11
6	0.018	14
8	0.018	18
6	0.018	13
2	0.018	5
2	0.018	5
2	0.018	4
3	0.018	8
5	0.018	10
5	0.018	11

# of Medium Truck each lane	HD % mix	# of Heavy Truck each lane
3	0.018	6
5	0.018	12
4	0.018	9
3	0.018	7
6	0.018	14
7	0.018	17
5	0.018	11
3	0.018	7
2	0.018	4
1	0.018	2
2	0.018	4
3	0.018	7
0	0.024	1
2	0.024	4
3	0.024	7
2	0.024	6
1	0.024	3
0	0.024	1
4	0.024	9
4	0.024	9
6	0.024	15
6	0.024	14
4	0.024	9
3	0.024	8
0	0.012	1
1	0.012	2
2	0.012	4
1	0.012	3
1	0.012	3
0	0.012	0
4	0.012	10
3	0.012	7
2	0.012	6
3	0.012	8
5	0.012	13
6	0.012	15

APPENDIX D

Non-Feasible/Non-Reasonable Barriers

The following figure shows the location of modeled noise barriers that were determined to not be both feasible and reasonable, per TxDOT traffic noise policy. The barrier name shown on the figure corresponds to the barrier name label included in the TNM file.

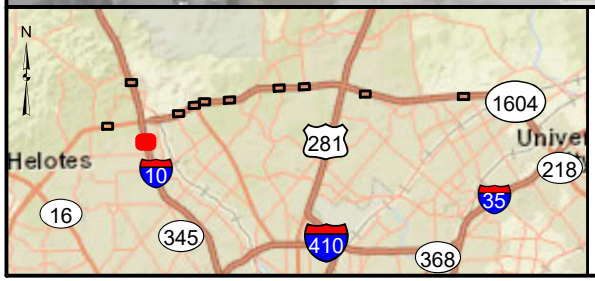

Figure 3

Noise Receiver and Non-Feasible Barrier Locations

Loop 1604 from SH 16 to I-35

Map 1 of 9

Legend

- Benefited Receiver
- Impacted Receiver
- No Impact Receiver
- Non-Feasible Noise Barrier
- Existing Right-of-Way
- Drainage Easement

N

0 100 200

Feet

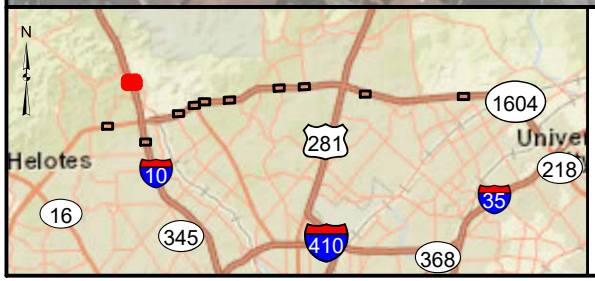

Figure 3

Noise Receiver and Non-Feasible Barrier Locations

Loop 1604 from SH 16 to I-35

Map 2 of 9

Legend

- Benefited Receiver
- Impacted Receiver
- No Impact Receiver
- Non-Feasible Noise Barrier
- Existing Right-of-Way

N

0 100 200

Feet

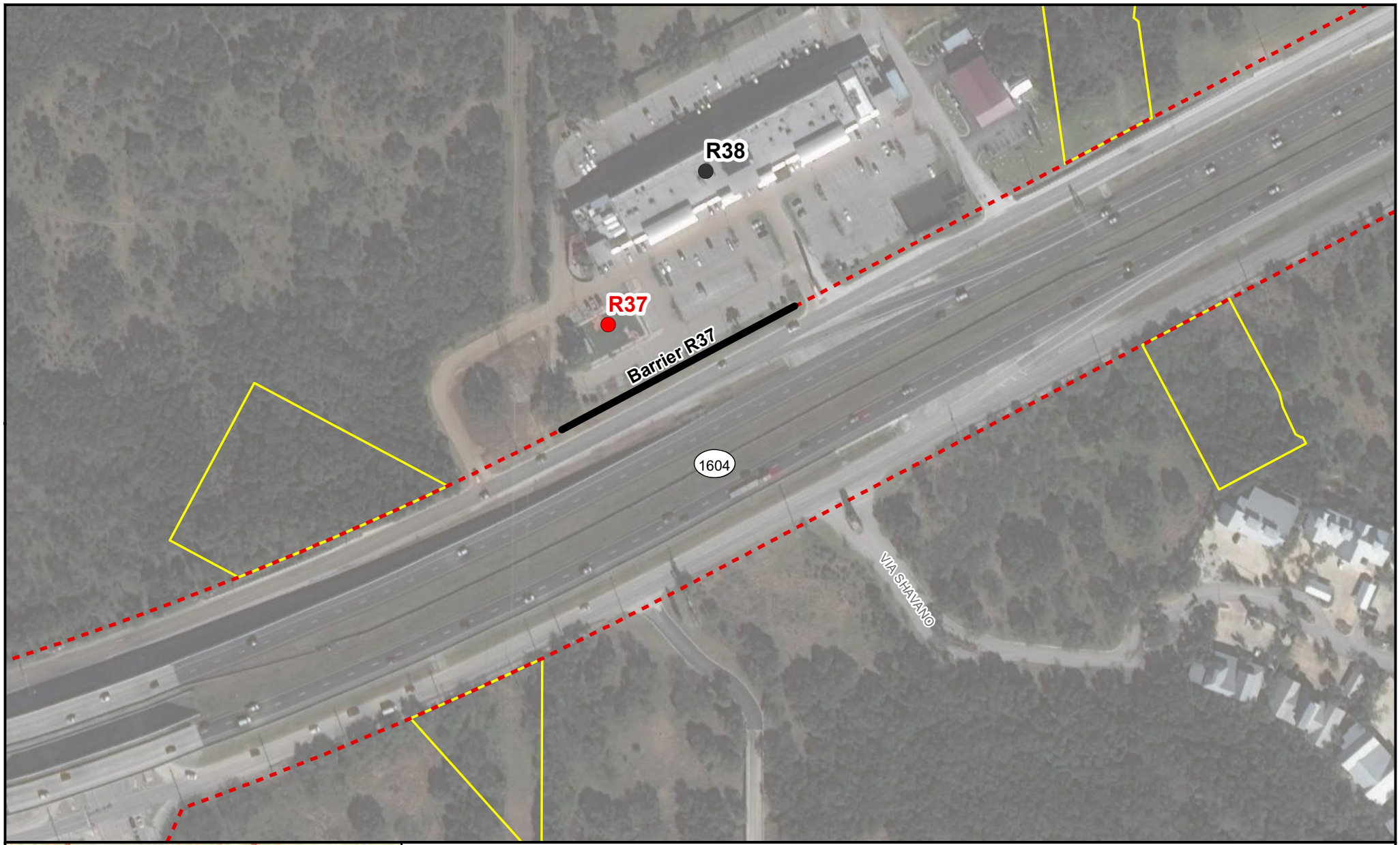

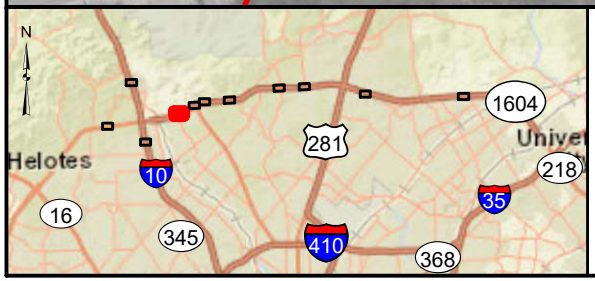

Figure 3

Noise Receiver and Non-Feasible Barrier Locations

Loop 1604 from SH 16 to I-35

Map 3 of 9

Legend

- Benefited Receiver
- Impacted Receiver
- No Impact Receiver
- Non-Feasible Noise Barrier
- Existing Right-of-Way
- Drainage Easement

N

0 100 200

Feet

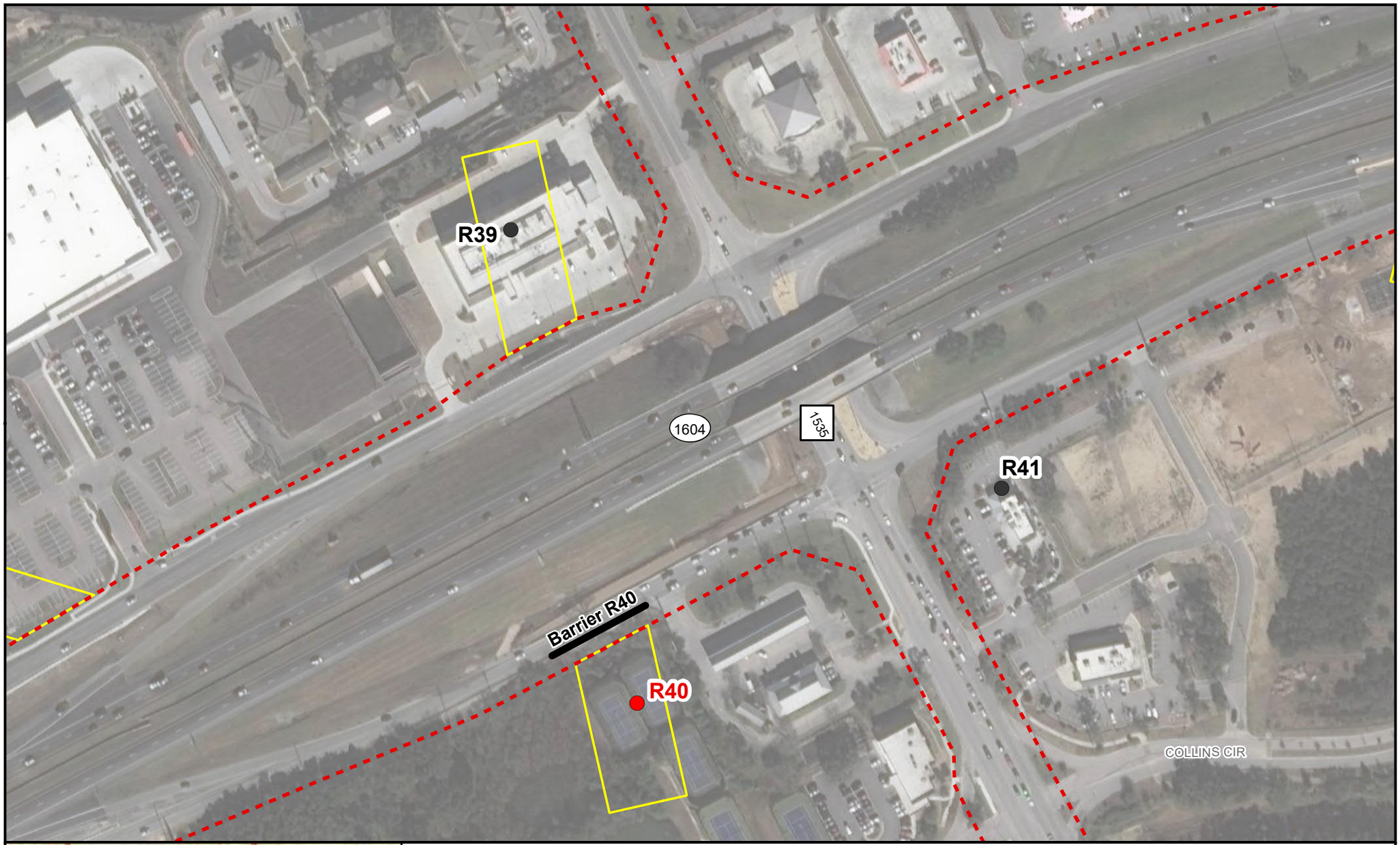

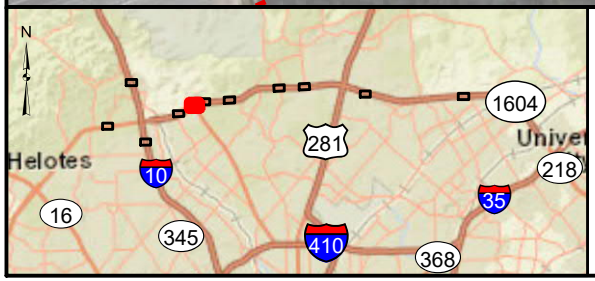

Figure 3

Noise Receiver and Non-Feasible Barrier Locations

Loop 1604 from SH 16 to I-35

Map 4 of 9

Legend

- Benefited Receiver
- Impacted Receiver
- No Impact Receiver
- Non-Feasible Noise Barrier
- Existing Right-of-Way
- Drainage Easement

N

0 100 200

Feet

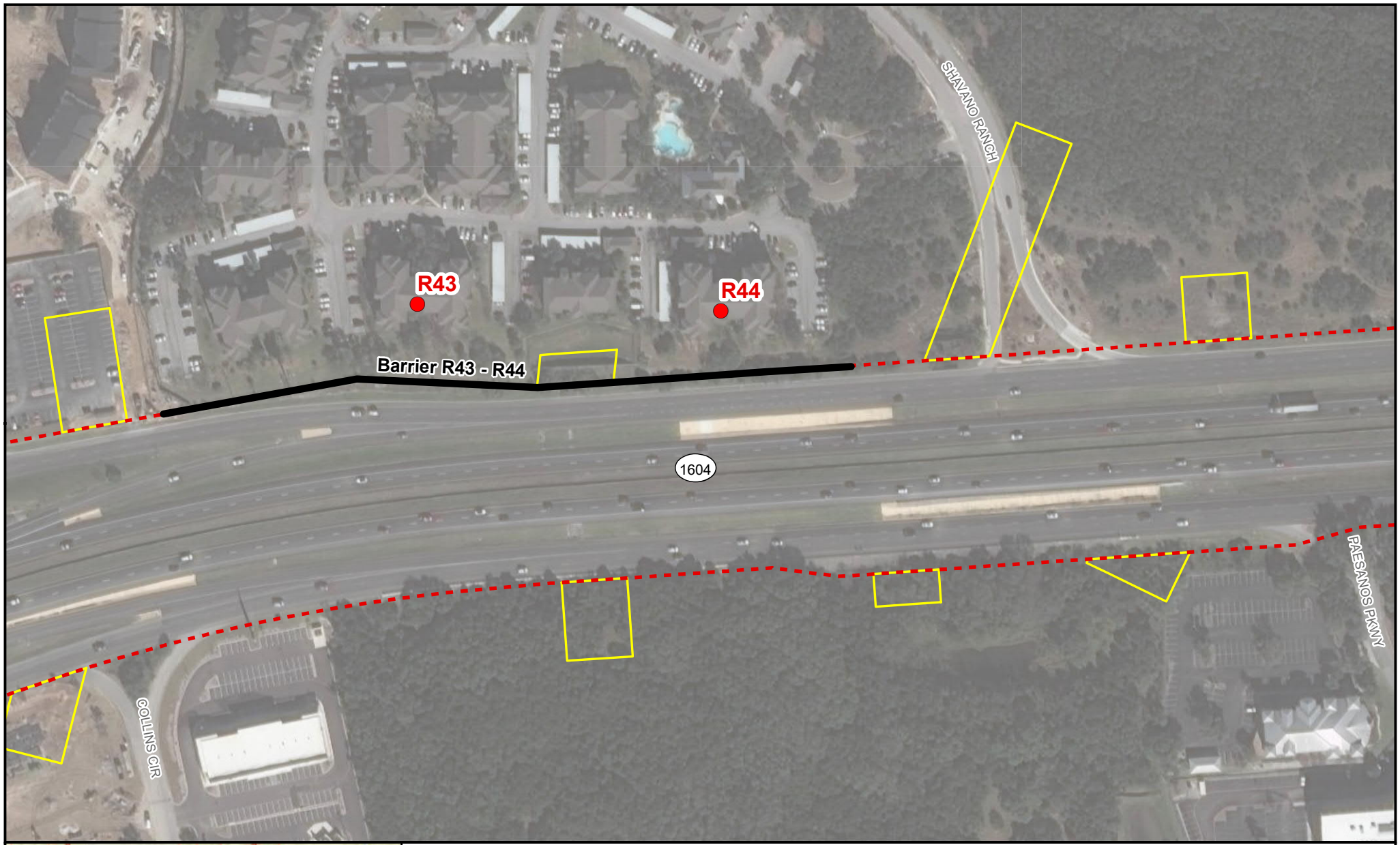

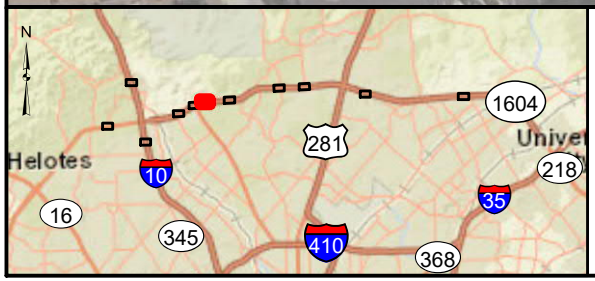

Figure 3

Noise Receiver and Non-Feasible Barrier Locations

Loop 1604 from SH 16 to I-35

Map 5 of 9

Legend

- Benefited Receiver
- Impacted Receiver
- No Impact Receiver
- Non-Feasible Noise Barrier
- Existing Right-of-Way
- Drainage Easement

N

0 100 200

Feet

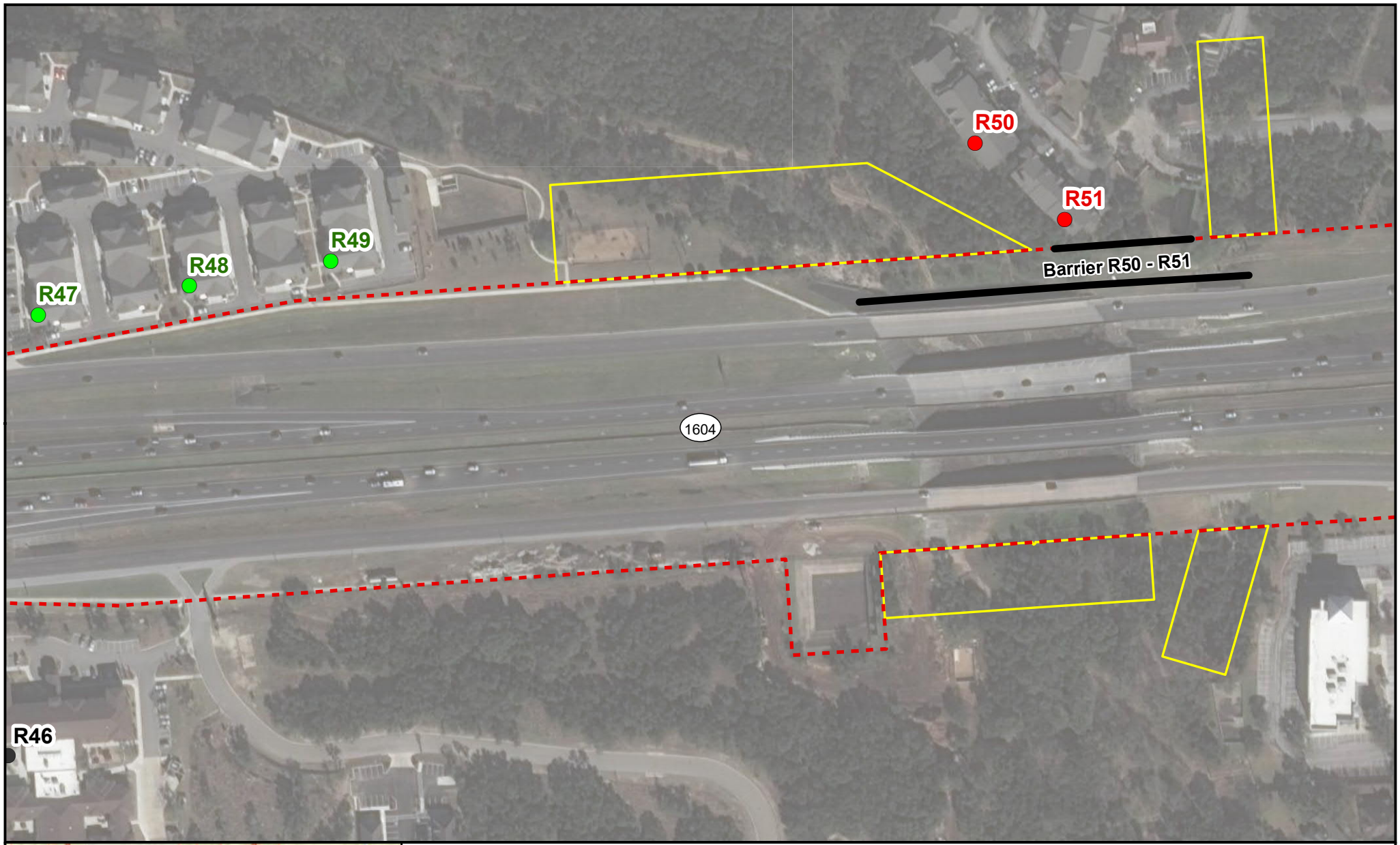

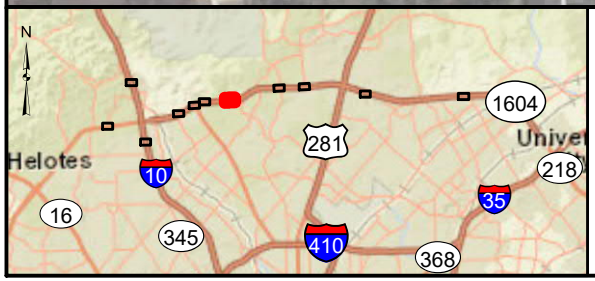

Figure 3

Noise Receiver and Non-Feasible Barrier Locations

Loop 1604 from SH 16 to I-35

Map 6 of 9

Legend

- Benefited Receiver
- Impacted Receiver
- No Impact Receiver
- Non-Feasible Noise Barrier
- Existing Right-of-Way
- Drainage Easement

N

0 100 200

Feet

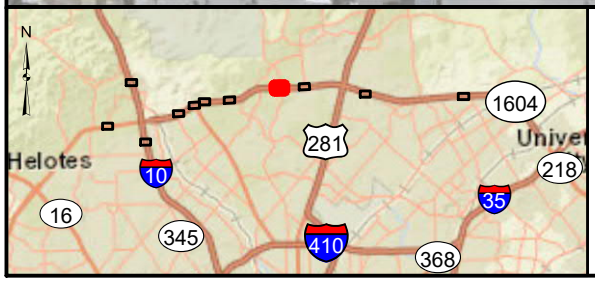

Figure 3

Noise Receiver and Non-Feasible Barrier Locations

Loop 1604 from SH 16 to I-35

Map 7 of 9

Legend

- Benefited Receiver
- Impacted Receiver
- No Impact Receiver
- Non-Feasible Noise Barrier
- Existing Right-of-Way

N

0 100 200

Feet

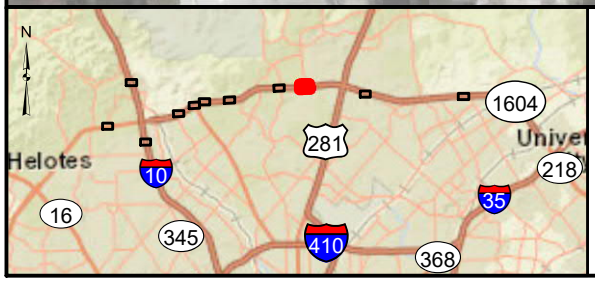

Figure 3

Noise Receiver and Non-Feasible Barrier Locations

Loop 1604 from SH 16 to I-35

Map 8 of 9

Legend

- Benefited Receiver
- Impacted Receiver
- No Impact Receiver
- Non-Feasible Noise Barrier
- Existing Right-of-Way
- Drainage Easement

N

0 100 200

Feet

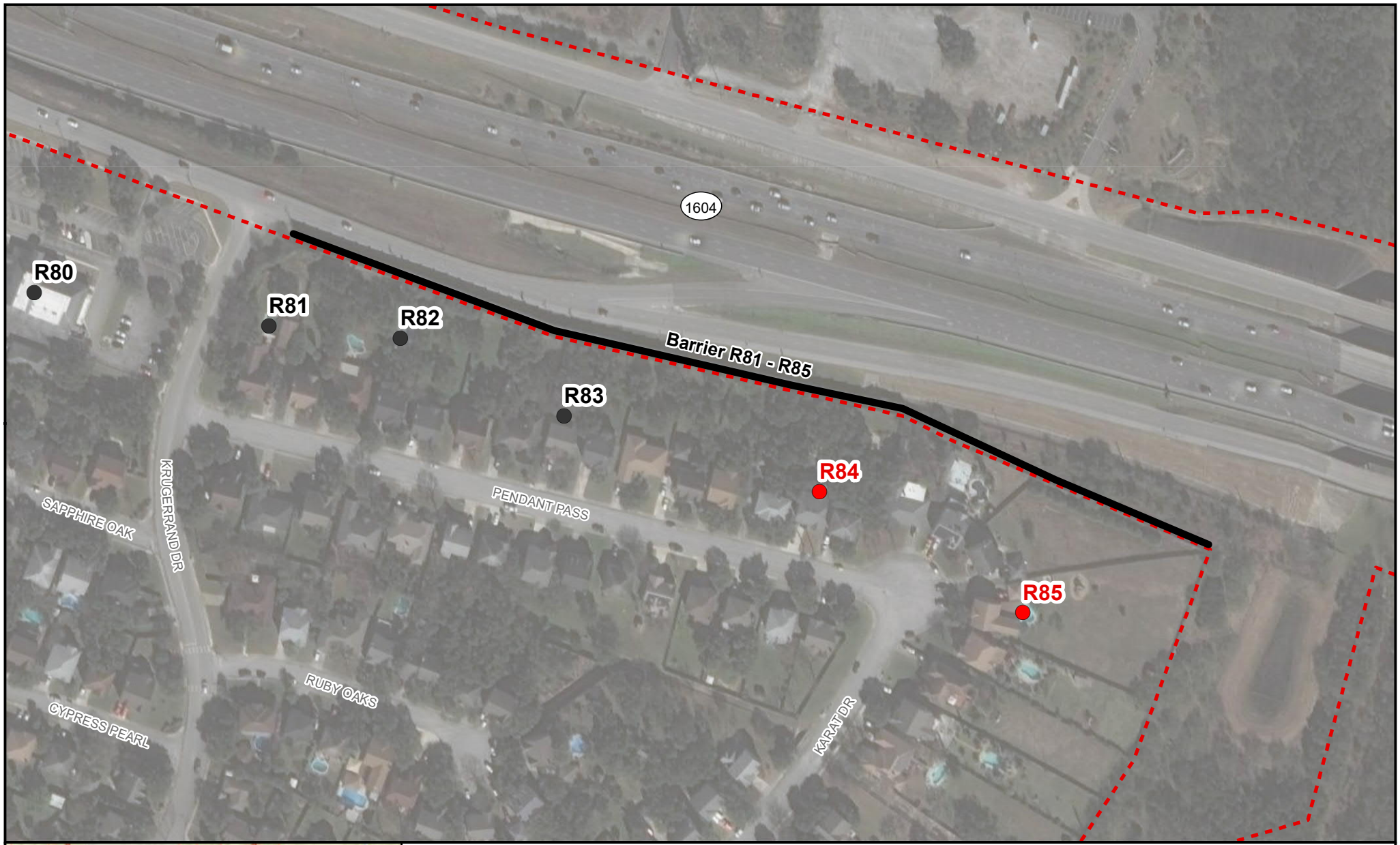

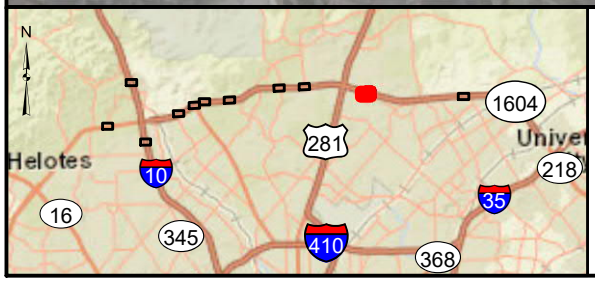

Figure 3

Noise Receiver and Non-Feasible Barrier Locations

Loop 1604 from SH 16 to I-35

Map 9 of 9

Legend

- Benefited Receiver
- Impacted Receiver
- No Impact Receiver
- Non-Feasible Noise Barrier
- Existing Right-of-Way

N

0 100 200

Feet