TEXAS DEPARTMENT OF TRANSPORTATION
SCHEMATIC LAYOUT
LOOP 1604 - BEXAR COUNTY
OFFICE OF THE DISTRICT ENGINEER
SAN ANTONIO, TEXAS
CSJ: 1479-01-024 & 2255-01-027
LIMITS: US 281 TO FM 1303
LENGTH = 8.1 MILES
DESIGN SPEED: MAINLANES = 60 MPH
FRONTAGE ROADS = 40 MPH
RAMPS = 40 MPH
FUNCTIONAL CLASS: 4 LANE DIVIDED URBAN ARTERIAL

APPROVED:

DIST

JONATHAN BOHL P.E.
DIRECTOR OF TRANSPORTATION PLANNING AND DEVELOPMENT
TXDOT SAN ANTONIO DISTRICT

APPROVED BY DESIGN DIVISION
LETTER DATED

APPROVED:

DIST

CLAYTON SMITH, P.E.
ADVANCED TRANSPORTATION PLANNING
TXDOT SAN ANTONIO DISTRICT

APPROVED BY T. H. H. A.
LETTER DATED

APPROVED:

DIST

MARIO JORGE, P.E.
DISTRICT ENGINEER
TXDOT SAN ANTONIO DISTRICT

NOT A BIDDING DOCUMENT
CARL L. MANGE, P.E.
TEXAS P.E. #102480

DATE

LOCATION MAP
Not To Scale

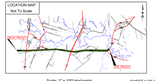

Scale: 1" = 100' Horizontal

SHEET 1 OF 3

LJA Engineering, Inc.

RPS klotz associates

1160 Dairy Ashford, Suite 500, Houston, Texas 77079
T. 281.589.7329 • email@klotz.com • Texas PE Firm Reg. #F-929

© 2017 LJA Texas, Klotz Klotz Associates, Inc. Unauthorized use of any of these drawings without the written consent of LJA Texas, Klotz Klotz Associates, Inc. is prohibited.

PRELIMINARY
SUBJECT TO CHANGE

1"=100'

LEGEND
PROP PAVEMENT
PROP SIDEWALK
PROP BRIDGE STRUCTURE
PROP RETAINING WALL
PROP CURB
PROP CONCRETE FLUME
PROP TOP OF WAY LINE
PROP EASEMENT
PROPOSED LOOP WATER MAIN

EXIST PAVEMENT
EXIST SIDEWALK
EXIST BRIDGE STRUCTURE
EXIST RETAINING WALL
EXIST CURB
EXIST CONCRETE FLUME
EXIST TOP OF WAY LINE
EXIST EASEMENT
EXISTING LOOP WATER MAIN

PROP BRIDGE
(SEE PLAN & ELEVATION SHEETS)

RAMP W1
RAMP W2
RAMP E1
RAMP E2
EXIST BRIDGE
PROP RET WALL
EXIST RET WALL
EXIST SIDEWALK
EXIST CURB
EXIST FLUME
PROP SIDEWALK
PROP CURB
PROP FLUME
PROP TOP OF WAY LINE
PROP EASEMENT
PROPOSED LOOP WATER MAIN

281
LEAL RD
ROCKPORT RD
FM 3499
FM 1937
BANDERA ROAD
LOOP 1604
SAN ANTONIO RIVER AUTHORITY
SAN COSME CREEK
SAN ANTONIO RIVER
SALADO CREEK
SAN COSME CREEK TRIB A
SAN COSME CREEK TRIB A SPILLWAY
LOOKOUT CANYON
BRIDGE
RAILROAD BRIDGE
TRAIL
BUS STATION
LOOKOUT CANYON PARK
CAMPOS JUSTICA SOCCER FIELDS
MATCH LINE STA 1167+00

San Antonio Floodplain
100 Year

APPROX SIGN LOCATION STA 1012+20

SIGN PROJECT
EXIST LP 1604
FROM US 281
TO FM 3499

1604 WEST OF US 281
STA 1040+00 TO STA 1050+00

LOOP 1604 BRIDGES OVER US 281
STA 1075+90

INTERIM 281 UNDER PROP 1604 WB BRIDGE

LOOP 1604 AT US 281
STA 1077+00 TO STA 1082+00

EXIST US 281 TO FM 1937
STA 1106+50 TO STA 1167+00

US 281 TO FM 3499
STA 1106+50 TO STA 1119+00

FM 3499 TO FM 1937
STA 1135+00 TO STA 1167+00

TEXAS DEPARTMENT OF TRANSPORTATION
SCHEMATIC LAYOUT
LOOP 1604 - BEXAR COUNTY
OFFICE OF THE DISTRICT ENGINEER
SAN ANTONIO, TEXAS
CSJ: 1479-01-024 & 2255-01-027
LIMITS: US 90 TO FM 1303
LENGTH = 8.1 MILES

DESIGN SPEED: MAINLANES = 60 MPH
FRONTAGE ROADS = 45 MPH
RAMPS = 40 MPH

FUNCTIONAL CLASS: 4 LANE DIVIDED URBAN ARTERIAL

APPROVED:

DIRECTOR OF TRANSPORTATION PLANNING AND DEVELOPMENT
TXDOT SAN ANTONIO DISTRICT

DATE

APPROVED: BY DESIGN DIVISION
LETTER DATED

APPROVED:

ADVANCED TRANSPORTATION PLANNING
TXDOT SAN ANTONIO DISTRICT

DATE

APPROVED: BY T.T.H.R.A.
LETTER DATED

APPROVED:

DISTRICT ENGINEER
TXDOT SAN ANTONIO DISTRICT

DATE

NOT A BIDDING DOCUMENT
CARL L. MARKS, P.E.
TEXAS P.E. #102380

DATE

LOCATION MAP
Not To Scale

Scale: 1" = 100' Horizontal

SHEET 2 OF 3

LJA Engineering, Inc.

RPS klotz associates
1160 Dairy Ashford, Suite 500, Houston, Texas 77079
T. 281.589.7337 • email@klotz.com • Texas PE Firm Reg. #F-929

© 2017 LJA Texas, Klotz Klotz, LP. Unauthorized Use Limited to Project Specific Use Only. All Rights Reserved.

PRELIMINARY
SUBJECT TO CHANGE

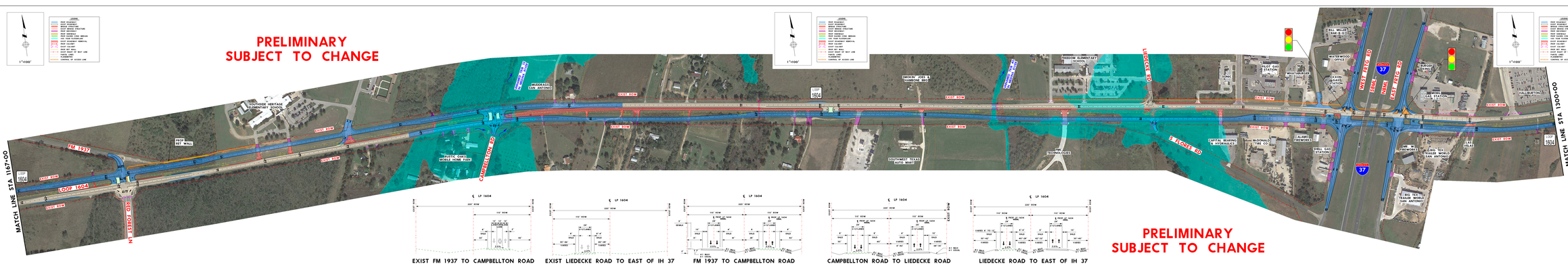

PRELIMINARY
SUBJECT TO CHANGE

TEXAS DEPARTMENT OF TRANSPORTATION
SCHEMATIC LAYOUT
LOOP 1604 - BEXAR COUNTY
OFFICE OF THE DISTRICT ENGINEER
SAN ANTONIO, TEXAS

CSJ: 1479-01-024 & 2255-01-027

LIMITS: US 281 TO FM 1303
LENGTH = 8.1 MILES

DESIGN SPEED: MAINLANES = 60 MPH
FRONTAGE ROADS = 45 MPH
RAMPS = 45 MPH

FUNCTIONAL CLASS: 4 LANE DIVIDED URBAN ARTERIAL

APPROVED:

______________, 2017

JONATHAN BEAN, P.E.
DIRECTOR OF TRANSPORTATION PLANNING AND DEVELOPMENT
TXDOT SAN ANTONIO DISTRICT

APPROVED: BY DESIGN DIVISION
LETTER DATED

APPROVED:

______________, 2017

CLAYTON RIPPS, P.E.
ADVANCED TRANSPORTATION PLANNING
TXDOT SAN ANTONIO DISTRICT

APPROVED: BY F. H. W. A.
LETTER DATED

APPROVED:

______________, 2017

MARIO JORGE, P.E.
DISTRICT ENGINEER
TXDOT SAN ANTONIO DISTRICT

NOT A BIDDING DOCUMENT
CHRIS S. MUNDIE, P.E.
TEXAS P.E. #102280

DATE

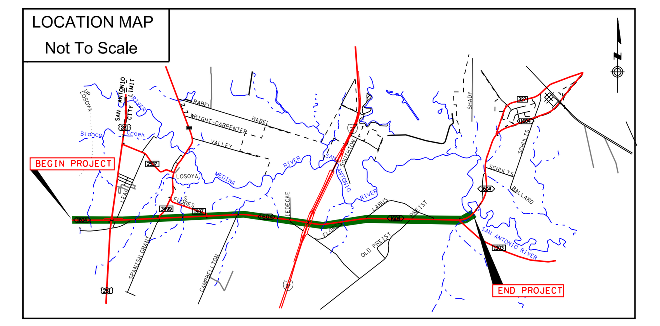

Scale: 1" = 100' Horizontal

SHEET 3 OF 3

LJA Engineering, Inc.
FRN - F-1386

RPS klotz associates
1160 Dairy Ashford, Suite 500, Houston, Texas 77079
T 281.589.7257 • email@klotz.com • Texas PE Firm Reg. #F-929

© 2017 by Texas Department of Transportation; (512)416-2055; all rights reserved

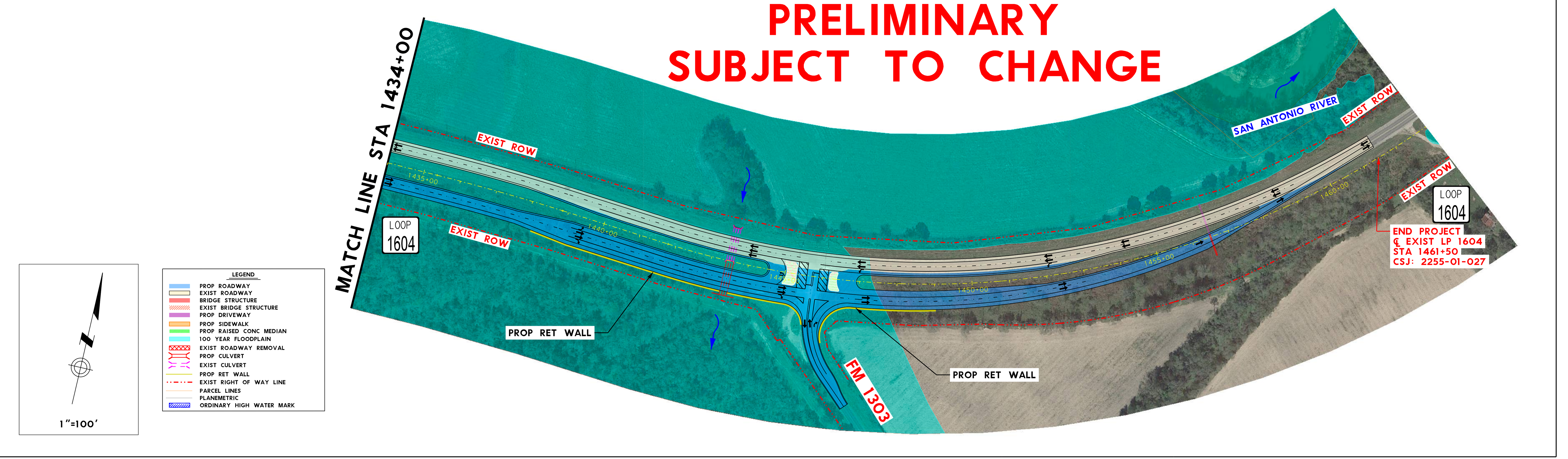

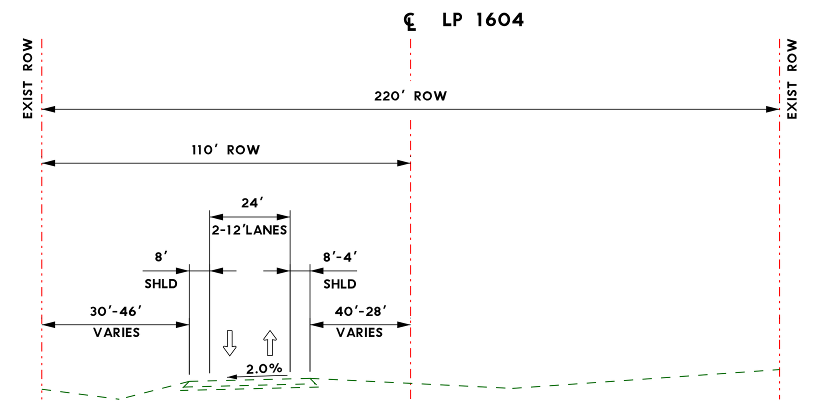

EXIST EAST OF IH 37 TO LABUS ROAD
STA 1300+00 TO STA 1435+00

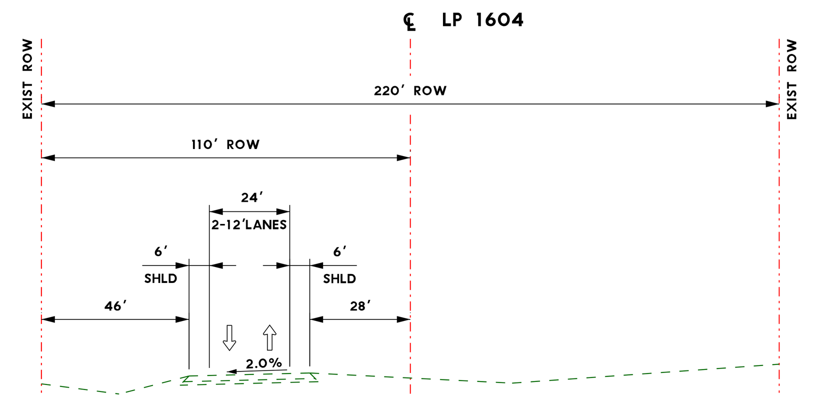

EXIST LABUS RD TO FM 1303
STA 1445+75 TO STA 1465+96

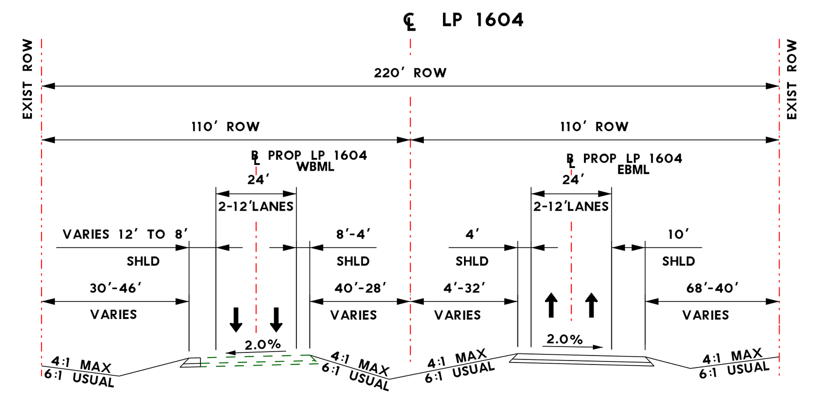

EAST OF IH 37 TO LABUS ROAD
STA 1300+00 TO STA 1435+00

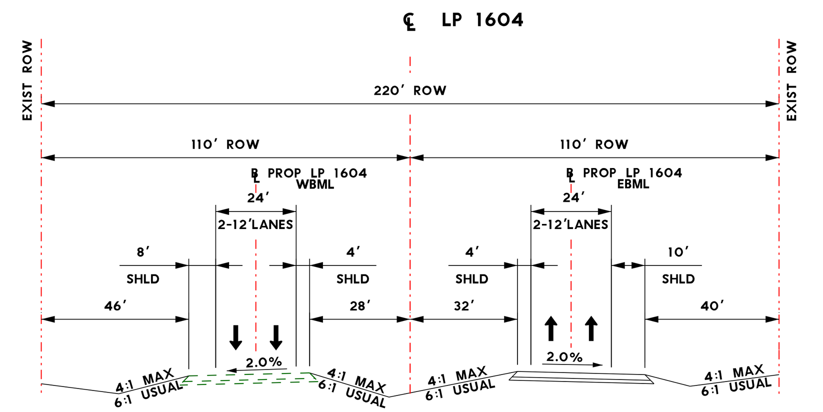

LABUS RD TO FM 1303
STA 1435+00 TO STA 1453+00