Texas Department of Transportation

DESIGN-BUILD SPECIFICATIONS

Items 10-30

Attachment 14-1

Utility Adjustment Forms

November 9, 2018

Texas Department of Transportation
Form PFD ROW-U-AdjCheck
REV 08/2018

UTILITY ADJUSTMENT CHECKLIST

(To be included with Utility Assembly Submittal)

U-No.: _____

District: _____

Utility Owner: _____

County(ies): _____

CSJ No(s).: R-_____ C-_____

Project Limits: _____ to _____

Federal ROW Project No.: _____

Reimbursement (*check one (1) box*): Actual Cost ☐ Lump Sum ☐ Non-Reimbursable ☐

Alternate Procedure Approval Date: _____

Description of Work (*Approximate from/to stationing and line type*):

Estimated Start Date: _____, 20_____

Estimated Completion or Duration: _____, 20_____

Estimated Total Adjustment Costs: $0.00

Estimated Betterment (*in dollars and calculated %*): $0.00 0%

Estimated Accrued Depreciation: $0.00

Estimated Salvage: $0.00

Credits and Vouchers: $0.00

Eligibility Ratio (*calculated and supported %*) $0.00 0%

Noteworthy Issues/Items: _____

ASSEMBLY PACKAGE

1. Have the required number of Utility Adjustment Assemblies of which the TxDOT Copy is color coded, been submitted?

   Yes ☐ No ☐ N/A ☐

2. Have the following forms been submitted?

PUAA/UAAA:	Yes ☐	No ☐	N/A ☐
UJUA:	Yes ☐	No ☐	N/A ☐
Statement - Contract Work:	Yes ☐	No ☐	N/A ☐
U-1 Affidavit:	Yes ☐	No ☐	N/A ☐
Quitclaim Deed:	Yes ☐	No ☐	N/A ☐
UM/UDC Sign Off:	Yes ☐	No ☐	N/A ☐

3. Are all forms submitted complete and correct for the situation/circumstance of the Utility Adjustment?

   Yes ☐ No ☐ N/A ☐

TRANSMITTAL MEMO

4. If the Adjustment has unique characteristics, does the transmittal include explanations and clarifications?

   Yes ☐ No ☐ N/A ☐

5. Has a recommendation for approval been stated?

   Yes ☐ No ☐ N/A ☐

6. If the Utility Adjustment is in more than one (1) RCSJ (Local Jurisdictional Boundary), have the percentages in each jurisdiction been detailed?

   Yes ☐ No ☐ N/A ☐

UTILITY ADJUSTMENT AGREEMENT

7. Have language modifications to the utility agreement been approved by TxDOT?

Yes ☐ No ☐ N/A ☐

8. Has the Utility consultant-engineering contract been reviewed and approved by the Developer's Utility Manager (UM)?

Yes ☐ No ☐ N/A ☐

UTILITY ADJUSTMENT PLANS AND SPECIFICATIONS

9. Plans folded so as to fit into 8.5" x 11" file?

Yes ☐ No ☐ N/A ☐

10. Have the Utility Adjustments been designed for the Proposed Configuration?

Yes ☐ No ☐ N/A ☐

11. Project or vicinity plan provided?

Yes ☐ No ☐ N/A ☐

12. Have the plans for the Utility Adjustment been sealed by a Registered Professional Engineer (PE)?

Yes ☐ No ☐ N/A ☐

13. Has the Utility Owner signed the cover sheet of the plans verifying review and approval, if Developer is responsible for Engineering on either Owner Managed or Developer Managed Agreement?

Yes ☐ No ☐ N/A ☐

14. Backfill requirements met (item 400 referenced)?

Yes ☐ No ☐ N/A ☐

15. If excavation is required, do the plans included a note on OSHA trench excavation protection?

Yes ☐ No ☐ N/A ☐

16. Is a note provided in the plans that the adjustment will conform with the TMUTCD?

Yes ☐ No ☐ N/A ☐

17. If the adjustment involves a plastic water, sanitary sewer, or gas line, has a metal detection wire been included in the estimate or with detailed in the plans?

Yes ☐ No ☐ N/A ☐

18. Has Barlow's Formula information been submitted for un-encased high pressure pipelines? (The Barlow's calculation must be provided by the utility owner. The following information is required to complete Barlow's formula. S=Yield Strength, Wall thickness = t, Outside Diameter = D, Design Factor = F. Maximum Operating Pressure must also be given and compared to the pressure calculated with Barlow's. The Barlow calculation must be shown with the submission.)

Yes ☐ No ☐ N/A ☐

19. If the pipeline is un-encased, is there adequate coating, wrapping and cathodic protection?

Yes ☐ No ☐ N/A ☐

20. Information on plans sufficient and adequate to:

Determine necessity and justification of proposed work?

Yes ☐ No ☐ N/A ☐

Demonstrate Utility Accommodation Rules compliance?

Yes ☐ No ☐ N/A ☐

Indicate highway stationing, existing and proposed ROW, offsets from proposed ROW, existing and proposed grades, and edge of pavement lines?

Yes ☐ No ☐ N/A ☐

Provide any other necessary or essential information such as pressure, flow, offset, type, condition, wall thickness, specifications etc.?

Yes ☐ No ☐ N/A ☐

21. Is this Utility Adjustment within ROW project limits or directly related to work required within project limits?

Yes ☐ No ☐ N/A ☐

22. Are any of the proposed utility facilities installed longitudinally within a control of access?

Yes ☐ No ☐ N/A ☐

COST ESTIMATE

23. Has the Developer's Utility Design Coordinator located on the plans the major items of material listed on the estimate by scaling or stationing?

Yes ☐ No ☐ N/A ☐

24. If the agreed sum method has been marked, has a detailed, itemized estimate and matching plans been provided?

Yes ☐ No ☐ N/A ☐

25. Is the estimate properly and adequately itemized and detailed?

Yes ☐ No ☐ N/A ☐

26. Are overheads and loadings checked for reasonableness?

Yes ☐ No ☐ N/A ☐

27. Replacement utility ROW charges justified and supported?

Yes ☐ No ☐ N/A ☐

28. Eligibility ratio calculated and recommended?

Yes ☐ No ☐ N/A ☐

29. Betterment credit applicable?

Yes ☐ No ☐ N/A ☐

If yes, is credit calculated and applied properly?

Yes ☐ No ☐ N/A ☐

30. Accrued Depreciation credit applicable?

Yes ☐ No ☐ N/A ☐

If yes, is credit calculated and applied properly?

Yes ☐ No ☐ N/A ☐

31. Salvage credit applicable?

Yes ☐ No ☐ N/A ☐

If yes, is credit applied properly?

Yes ☐ No ☐ N/A ☐

32. Estimate extensions checked?

Yes ☐ No ☐ N/A ☐

AFFIDAVIT OF PROPERTY INTEREST

33. Proof of compensable property interest established by utility where applicable?

Yes ☐ No ☐ N/A ☐

If yes, according to the "**Real Property Interest**" paragraph of the PUAA:

Does the estimate detail reimbursement for "New Property" interest?

Yes ☐ No ☐ N/A ☐

Does the estimate detail compensation for relinquishing "Existing Property" interest?

Yes ☐ No ☐ N/A ☐

Did the utility owner provide a letter stating that they will quitclaim their property interest at no costs or an agreed sum if new utility property interests are not being acquired?

Yes ☐ No ☐ N/A ☐

34. Have the parcel ID numbers to be Quitclaimed been identified?

Yes ☐ No ☐ N/A ☐

35. Has the owner provided a signed letter of intent to Quitclaim, and has a copy of the correct Quitclaim Deed(s) been submitted?

Yes ☐ No ☐ N/A ☐

R.O.W. MAPS

36. Approved and current ROW Maps on file with project office?

Yes ☐ No ☐ N/A ☐

37. Have the existing and proposed utility facilities been plotted on the ROW map and attached to this assembly?

Yes ☐ No ☐ N/A ☐

COMMENTS: _____

Prepared by: _____ _____
Utility Design Coordinator Date

Recommended for Approval by: _____ _____
Quality Control Date

Approved by: _____ _____
Utility Manager Date

County: _____
ROW CSJ No.: _____
Const. CSJ No.: _____
Highway: _____
Fed. Proj. No.: _____
Limits: _____ to _____

PROJECT UTILITY ADJUSTMENT AGREEMENT
(DB Contractor-Managed)

Agreement No.: _____-U-_____

THIS AGREEMENT, by and between [DB Contractor], hereinafter identified as the "**DB Contractor**" and [Utility Owner], hereinafter identified as the "**Owner**", is as follows:

WITNESSETH

WHEREAS, the STATE OF TEXAS, acting by and through the Texas Department of Transportation, hereinafter identified as "TxDOT", is authorized to design, construct, operate, maintain, and improve projects as part of the state highway system throughout the State of Texas, all in conformance with the applicable provisions of Chapters 201, 203, 222, 223, 224 and 228 of the Texas Transportation Code, as amended; and

WHEREAS, TxDOT proposes to construct a project identified as [Project Name] (the "Project") and classified as either Interstate, Toll or Traditional (meaning eligibility based on existing compensable interest in the land occupied by the facility to be relocated within the proposed highway right of way limits) as indicated below (*check one (1) box*). Reimbursement will be authorized by the type of project selected below in conformance with §203.092 of the Transportation Code,

☐ Interstate

☐ Toll

☐ Traditional

; and

WHEREAS, pursuant to that certain Design-Build Contract ("DBC") by and between TxDOT and the DB Contractor with respect to the Project, the DB Contractor has undertaken the obligation to design, construct, finance, operate and maintain the Project and adhere to all requirements in the DBC; and

WHEREAS, the DB Contractor's duties pursuant to the DBC include causing the relocation, removal or other necessary adjustment of existing Utilities impacted by the Project (collectively, "Adjustment"), subject to the provisions herein; and

WHEREAS, the Project may receive Federal funding, financing and/or credit assistance; and

WHEREAS, the DB Contractor has notified the Owner that certain of its facilities and appurtenances (the "Owner Utilities") are in locational conflict with the Project (and/or with the Ultimate Configuration of the Project), and the Owner has requested that the DB Contractor undertake the Adjustment of the Owner Utilities as necessary to accommodate the Project (and the Ultimate Configuration) and the Owner agrees that the "Project" will be constructed in accordance with §203.092 of the Texas Transportation Code, as amended, and 23 CFR 645 Subpart A (Utility Relocations, Adjustments and Reimbursement); and

WHEREAS, the Owner Utilities and the proposed Adjustment of the Owner Utilities are described as follows *[insert below a description of the affected facilities (by type, size and location) as well as a brief description of the nature of the Adjustment work to be performed (e.g., "adjust 12" waterline from approximately Highway Station 100+00 to approximately Highway Station 200+00)]*:

_____; and

WHEREAS, the Owner recognizes that time is of the essence in completing the work contemplated herein; and

WHEREAS, the DB Contractor and the Owner desire to implement the Adjustment of the Owner Utilities by entering into this Agreement.

AGREEMENT

NOW, THEREFORE, in consideration of these premises and of the mutual covenants and agreements of the parties hereto and other good and valuable consideration, the receipt and sufficiency of which being hereby acknowledged, the DB Contractor and the Owner agree as follows:

1. **Preparation of Plans.** [*Check one (1) box that applies:*]

☐ The DB Contractor has hired engineering firm(s) acceptable to the Owner to perform all engineering services needed for the preparation of plans, required specifications, and cost estimates, attached hereto as Exhibit A (collectively, the "Plans"), for the proposed Adjustment of the Owner Utilities. The DB Contractor represents and warrants that the Plans conform to the most recent Utility Accommodation Rules issued by the Texas Department of Transportation ("TxDOT"), as set forth in 43 Texas Administrative Code Part 1, Chapter 21, Subchapter C, *et seq.* (the "UAR"). By its execution of this Agreement or by the signing of the Plans, the Owner hereby approves and confirms that the Plans are in compliance with the "standards" described in Paragraph 3(a)(4).

☐ The Owner has provided plans, required specifications and cost estimates, attached hereto as Exhibit A (collectively, the "Plans"), for the proposed Adjustment of the Owner Utilities. The Owner represents and warrants that the Plans conform to the most recent Utility Accommodation Rules issued by the Texas Department of Transportation ("TxDOT"), as set forth in 43 Texas Administrative Code Part 1, Chapter 21, Subchapter C, *et seq.* (the "UAR"). By its execution of this Agreement, the DB Contractor and the Owner hereby approve the Plans. The Owner also has provided to the DB Contractor a Utility plan view map illustrating the location of existing and proposed Utility facilities on the DB Contractor's right of way map of the Project. With regard to its preparation of the Plans, the Owner represents as follows *[check one (1) box that applies]*:

☐ The Owner's employees were utilized to prepare the Plans, and the charges therefore do not exceed the Owner's typical costs for such work.

☐ The Owner utilized consulting engineers to prepare the Plans, and the fees for such work are not based upon a percentage of construction costs. Further, such fees encompass only the work necessary to prepare the Plans for Adjustment of the Owner Utilities described herein, and do not include fees for work done on any other project. The fees of the consulting engineers are reasonable and are comparable to the fees typically charged by consulting engineers in the locale of the Project for comparable work for the Owner.

2. **Review by TxDOT.** The parties hereto acknowledge and agree as follows:

(a) Upon execution of this Agreement by the DB Contractor and the Owner, the DB Contractor will submit this Agreement, together with the attached Plans, to TxDOT for its review and approval as part of a package referred to as a "Utility Assembly". The parties agree to cooperate in good faith to modify this Agreement and/or the Plans, as necessary and mutually acceptable to all parties, to respond to any comments made by TxDOT thereon. Without limiting the generality of the foregoing:

(1) The Owner agrees to respond (with comment and/or acceptance) to any modified Plans and/or Agreement prepared by the DB Contractor in response to TxDOT comments within **14 Business Days** after receipt of such modifications; and

(2) If the Owner originally prepared the Plans, the Owner agrees to modify the Plans in response to TxDOT comments and to submit such modified Plans to the DB Contractor for its comment and/or approval (and re-submittal to TxDOT for its comment and/or approval) within **14 Business Days** after receipt of TxDOT's comments.

The Owner's failure to timely respond to any modified Plans submitted by the DB Contractor pursuant to this paragraph shall be deemed the Owner's approval of same. If the Owner fails to timely prepare modified Plans which are its responsibility hereunder, then the DB Contractor shall have the right to modify the Plans for the Owner's approval as if the DB Contractor had originally prepared the Plans. The process set forth in this paragraph will be repeated until the Owner, the DB Contractor and TxDOT have all approved this Agreement and the Plans.

(b) The parties hereto acknowledge and agree that TxDOT's review, comments and approval of a Utility Assembly or any component thereof shall constitute TxDOT's approval of the location and manner in which a Utility Assembly will be installed, adjusted, or relocated within the State Highway right of way (the "ROW"), subject to the DB Contractor and the Owner's satisfactory performance of the Adjustment work in accordance with the approved Plans. TxDOT has no duty to review Owner Utilities or components for their quality or adequacy to provide the intended Utility service.

3. **Design and Construction Standards.**

(a) All design and construction performed for the Adjustment work which is the subject of this Agreement shall comply with and conform to the following:

(1) All applicable local and State Laws, regulations, decrees, ordinances and policies, including the UAR, the *Utility Manual* issued by TxDOT (to the extent its requirements are mandatory for the Utility Adjustment necessitated by the Project, as communicated to the Owner by the DB Contractor or TxDOT), the requirements of the DBC, and the policies of TxDOT;

(2) All Federal Laws, regulations, decrees, ordinances and policies applicable to projects receiving Federal funding, financing and/or credit assistance, including without limitation, 23 CFR 645 Subpart A and B; and the Buy America provisions of 23 U.S.C. §313 and 23 CFR 635.410. The Utility Owner shall supply, upon request by the DB Contractor or TxDOT, proof of compliance with the aforementioned Laws, rules and regulations prior to the commencement of construction;

(3) The terms of all governmental permits or other approvals, as well as any private approvals of third parties necessary for such work;

(4) The standard specifications, standards of practice, and construction methods (collectively, "standards") which the Owner customarily applies to Utility facilities comparable to the Owner Utilities that are constructed by the Owner or for the Owner by its contractors at the Owner's expense, which standards are current at the time this Agreement is signed by the Owner, and which the Owner has submitted to the DB Contractor in writing; and

(5) Owner agrees that all service matters must be placed outside of the State ROW.

(b) Such design and construction also shall be consistent and compatible with:

(1) The DB Contractor's current design and construction of the Project;

(2) The Ultimate Configuration for the Project; and

(3) Any other Utilities being installed in the same vicinity.

The Owner acknowledges receipt of Project plans and Ultimate Configuration documents from the DB Contractor as necessary to comply with the foregoing. In case of any inconsistency among any of the standards referenced in this Agreement, the most stringent standard shall apply.

(c) The plans, specifications, and cost estimates contained in Exhibit A shall identify and detail all Utility facilities that the Owner intends to abandon in place rather than remove, including material type, quantity, size, age and condition. No facilities containing hazardous or contaminated materials may be abandoned, but shall be specifically

identified and removed in accordance with the requirements of subparagraph (a). It is understood and agreed that the DB Contractor shall not pay for the assessment and remediation or other corrective action relating to soil and ground water contamination caused by the Utility facility prior to the removal.

4. **Responsibility for Costs of Adjustment Work.** With the exception of any Betterment (hereinafter defined), the parties shall allocate the cost of any Adjustment between themselves as identified in Exhibit A and in accordance with §203.092 of the Texas Transportation Code. An allocation percentage may be determined by application of an eligibility ratio, if appropriate, as detailed in Exhibit A.

5. **Construction by the DB Contractor.**

(a) The Owner hereby requests that the DB Contractor perform the construction necessary to adjust the Owner Utilities and the DB Contractor hereby agrees to perform such construction. All construction work hereunder shall be performed in a good and workmanlike manner, and in accordance with the Plans (except as modified pursuant to Paragraph 16).

(b) The DB Contractor shall retain such contractor or contractors as are necessary to adjust the Owner Utilities.

(c) The DB Contractor shall obtain all permits necessary for the construction to be performed by the DB Contractor hereunder, and the Owner shall cooperate in that process as needed.

6. **Reimbursement of Owner's Indirect Costs.**

(a) DB Contractor agrees to reimburse the Owner its share, if applicable, of the Owner's indirect costs (e.g., engineering, inspection, testing, ROW) as identified in Exhibit A. When requested by the Owner, monthly progress payments will be made. The monthly payment will not exceed 90% of the estimated indirect work done to date. Once the indirect work is complete, final payment of the eligible indirect costs will be made. Intermediate payments shall not be construed as final payment for any items included in the intermediate payment.

(b) The Owner's indirect costs associated with Adjustment of the Owner Utilities shall be developed pursuant to the method checked and described below [*check only one (1) box*]:

☐ (1) Actual related indirect costs accumulated in accordance with:

(i) A work order accounting procedure prescribed by the applicable Federal or State regulatory body, or

(ii) Established accounting procedure developed by the Owner and which the Owner uses in its regular operations

*(either (i) or (ii) referred to as "**Actual Cost**")*, OR

☐ (2) The agreed sum of $_____ ("**Agreed Sum**") as supported by the analysis of the Owner's estimated costs attached hereto as part of Exhibit A.

(c) All indirect costs charged to the DB Contractor by the Owner shall be reasonable and shall be computed using rates and schedules not exceeding those applicable to similar work performed by or for the Owner at the Owner's expense. The DB Contractor's performance of the Adjustment work hereunder and payment of the DB Contractor's share of the Owner's costs pursuant to this Agreement, if applicable, shall be full compensation to the Owner for all costs incurred by the Owner in adjusting the Owner Utilities (including without limitation, costs of relinquishing and/or acquiring right of way).

7. **Advancement of Funds by Owner for Construction Costs.**

(a) Advancement of Owner's share, if any, of estimated costs, Exhibit A shall identify all estimated engineering and construction-related costs, including labor, material, equipment and other miscellaneous construction items. Exhibit A shall also identify the Owner's and DB Contractor's respective shares of the estimated costs. The Owner shall advance to the DB Contractor its allocated share, if any, of the estimated costs for construction and engineering work to be performed by the DB Contractor, in accordance with the following terms:

☐ The Adjustment of the Owner's Utilities does not require advancement of funds.

☐ The Adjustment of the Owner's Utilities does require advancement of funds and the terms agreed to between the DB Contractor and the Owner are listed below.

[Insert terms of advance funding to be agreed between DB Contractor and Owner]

_____

(b) Adjustment Based on Actual Costs or Agreed Sum

[*Check the one (1) appropriate provision, if advancement of funds is required*]:

☐ The Owner is responsible for its share of the DB Contractor's actual cost for the Adjustment, including the identified Betterment. Accordingly, upon completion of all Adjustment work to be performed by both parties pursuant to this Agreement, (i) the Owner shall pay to the DB Contractor the amount, if any, by which the actual cost of the Betterment (as determined in Paragraph 9(b)) *plus* the actual cost of Owner's share of the Adjustment (based on the allocation set forth in Exhibit A) exceeds the estimated cost advanced by the Owner, or (ii) the DB Contractor shall refund to the Owner the amount, if any, by which such advance exceeds such actual cost, as applicable.

☐ The Agreed Sum is the agreed and final amount due for the Adjustment, including any Betterment, under this Agreement. Accordingly, no adjustment (either up or down) of such amount shall be made based on actual costs.

8. **Invoices.** On invoices prepared by either the Owner or the DB Contractor, all costs developed using the "**Actual Cost**" method described in Paragraph 6(b)(1) shall be itemized in a format allowing for comparisons to the approved estimates, including listing each of the services performed, the amount of time spent and the date on which the service was performed. The original and three (3) copies of each invoice, together with (i) such supporting information to substantiate all invoices as reasonably requested, and (ii) such waivers and releases of liens as the other party may reasonably require, shall be submitted to the other party at the address for notices stated in Paragraph 21, unless otherwise directed pursuant to Paragraph 22.

The Owner and the DB Contractor shall make commercially reasonable efforts to submit final invoices no later than 120 days after completion of work. The Owner and the DB Contractor hereby acknowledge and agree that any costs submitted to the other party within 12 months following completion of all Adjustment work to be performed by the parties pursuant to this Agreement shall be deemed to have been abandoned and waived.

9. **Betterment and Salvage.**

(a) For purposes of this Agreement, the term "Betterment" means any upgrading of an Owner Utility being adjusted that is not attributable to the construction of the Project and is made solely for the benefit of and at the election of the Owner, including but not limited to an increase in the capacity, capability, efficiency or function of the adjusted Utility over that provided by the existing Utility or an expansion of the existing Utility; *provided, however*, that the following are not considered Betterments:

(1) Any upgrading which is required for accommodation of the Project;

(2) Replacement devices or materials that are of equivalent standards although not identical;

(3) Replacement of devices or materials no longer regularly manufactured with the next highest grade or size;

(4) Any upgrading required by applicable Laws, regulations or ordinances;

(5) Replacement devices or materials which are used for reasons of economy (e.g., non-stocked items that may be uneconomical to purchase); or

(6) Any upgrading required by the Owner's written "standards" meeting the requirements of Paragraph 3(a)(4) and deemed to be of direct benefit to the Project.

[*Include the following for fiber optic Owner Utilities only:*] Extension of an adjustment to the nearest splice boxes shall not be considered a Betterment if required by the Owner in order to maintain its written telephony standards.

(b) It is understood and agreed that the DB Contractor shall not pay for any Betterments and that the Owner shall be solely responsible therefor. No Betterment may be performed hereunder which is incompatible with the Project or the Ultimate Configuration or which

cannot be performed within the other constraints of applicable Law, any applicable governmental approvals, including without limitation the scheduling requirements thereunder.

Accordingly, the parties agree as follows [*check the one (1) box that applies, and complete if appropriate*]:

☐ The Adjustment of the Owner Utilities pursuant to the Plans does not include any Betterment.

☐ The Adjustment of the Owner Utilities pursuant to the Plans includes a Betterment to the Owner Utilities by reason of *[Insert explanation, e.g. "replacing 12" pipe with 24" pipe]*: _____.

The DB Contractor has provided to the Owner comparative estimates for (i) all work to be performed by the DB Contractor pursuant to this Agreement, including work attributable to the Betterment, and (ii) the cost to perform such work without the Betterment, which estimates are hereby approved by the Owner. The estimated cost of the DB Contractor's work hereunder which is attributable to Betterment is $_____, calculated by *subtracting* (ii) from (i). The percentage of the total cost of the DB Contractor's work hereunder which is attributable to Betterment is _____%, calculated by *subtracting* (ii) from (i), which remainder is *divided* by (i).

(c) If Paragraph 9(b) identifies Betterment, the Owner shall advance to the DB Contractor, at least **14 Business Days** prior to the date scheduled for commencement of construction for Adjustment of the Owner Utilities, the estimated cost attributable to Betterment as set forth in Paragraph 9(b). Should the Owner fail to advance payment to the DB Contractor **14 Business Days** prior to commencement of the Adjustment construction, the DB Contractor shall have the option of commencing and completing (without delay) the Adjustment work without installation of the applicable Betterment. *[If Paragraph 9(b) identifies Betterment, check the one (1) appropriate provision]*:

☐ The estimated cost stated in Paragraph 9(b) is the agreed and final amount due for Betterment hereunder, and accordingly no adjustment (either up or down) of such amount shall be made based on actual costs.

☐ The Owner is responsible for the DB Contractor's actual cost for the identified Betterment. Accordingly, upon completion of all Adjustment work to be performed by both parties pursuant to this Agreement, (i) the Owner shall pay to the DB Contractor the amount, if any, by which the actual cost of the Betterment (determined as provided below in this paragraph) exceeds the estimated cost advanced by the Owner, or (ii) the DB Contractor shall refund to the Owner the amount, if any, by which such advance exceeds such actual cost, as applicable. Any additional payment by the Owner shall be due within **60 calendar days** after the Owner's receipt of the DB Contractor's invoice therefor, together with supporting documentation; any refund shall be due within **60 calendar days** after completion of the Adjustment work hereunder. The actual cost of Betterment incurred by the DB Contractor shall be calculated by *multiplying* (i) the

Betterment percentage stated in Paragraph 9(b), by (ii) the actual cost of all work performed by the DB Contractor pursuant to this Agreement (including work attributable to the Betterment), as invoiced by the DB Contractor to the Owner.

(d) If Paragraph 9(b) identifies Betterment, the amount allocable to Betterment in the Owner's indirect costs shall be determined by applying the percentage of the Betterment calculated in Paragraph 9(b) to the Owner's indirect costs. The Owner's invoice to the DB Contractor for the DB Contractor's share of the Owner's indirect costs, shall credit the DB Contractor with any Betterment amount determined pursuant to this Paragraph 9(d).

(e) For any Adjustment from which the Owner recovers any materials and/or parts and retains or sells the same, after application of any applicable Betterment credit, the Owner's invoice to the DB Contractor for its costs shall credit the DB Contractor with the salvage value for such materials and/or parts.

(f) The determinations and calculations of Betterment described in this Paragraph 9 shall exclude right of way acquisition costs. Betterment in connection with right of way acquisition is addressed in Paragraph 15.

10. **Management of the Adjustment Work.** The DB Contractor will provide project management during the Adjustment of the Owner Utilities.

11. **Utility Investigations.** At the DB Contractor's request, the Owner shall assist the DB Contractor in locating any Utilities (including appurtenances) which are owned and/or operated by the Owner and may be impacted by the Project. Without limiting the generality of the foregoing, in order to help assure that neither the adjusted Owner Utilities nor existing, unadjusted Utilities owned or operated by the Utility Owner are damaged during construction of the Project, the Owner shall mark in the field the location of all such Utilities horizontally on the ground in advance of Project construction in the immediate area of such Utilities.

12. **Inspection and Acceptance by the Owner.**

(a) Throughout the Adjustment construction hereunder, the Owner shall provide adequate inspectors for such construction. The work shall be inspected by the Owner's inspector(s) at least once each working day, and more often if such inspections are deemed necessary by Owner. Further, upon request by the DB Contractor or its Subcontractors, the Owner shall furnish an inspector at any reasonable time in which construction is underway pursuant to this Agreement, including occasions when construction is underway in excess of the usual 40 hour work week and at such other times as reasonably required. The Owner agrees to promptly notify the DB Contractor of any concerns resulting from any such inspection.

(b) The Owner shall perform a final inspection of the adjusted Owner Utilities, including conducting any tests as are necessary or appropriate, within **five (5) Business Days** after completion of construction hereunder. The Owner shall accept such construction if it is consistent with the performance standards described in Paragraph 3, by giving written notice of such acceptance to the DB Contractor within said **five (5) day** period. If the Owner does not accept the construction, then the Owner shall, not later than the

expiration of said **five (5) day** period, notify the DB Contractor in writing of its grounds for non-acceptance and suggestions for correcting the problem, and if the suggested corrections are justified, the DB Contractor will comply. The Owner shall re-inspect any revised construction (and retest if appropriate) and give notice of acceptance, no later than **five (5) Business Days** after completion of corrective work. The Owner's failure to inspect and to give any required notice of acceptance or non-acceptance within the specified time period shall be deemed accepted.

(c) From and after the Owner's acceptance (or deemed acceptance) of an adjusted Owner Utility, the Owner agrees to accept ownership of, and full operation and maintenance responsibility for, such Owner Utility.

13. **Design Changes.** The DB Contractor will be responsible for additional Adjustment design and construction costs necessitated by design changes to the Project, upon the terms specified herein.

14. **Field Modifications.** The DB Contractor shall provide the Owner with documentation of any field modifications, including Utility Adjustment Field Modifications as well as minor changes described in Paragraph 16(b), occurring in the Adjustment of the Owner Utilities.

15. **Real Property Interests.**

(a) The Owner has provided, or upon execution of this Agreement shall promptly provide to the DB Contractor, documentation acceptable to TxDOT indicating any right, title or interest in real property claimed by the Owner with respect to the Owner Utilities in their existing location(s). Such claims are subject to TxDOT's approval as part of its review of the DB Contractor Utility Assembly as described in Paragraph 2. Claims approved by TxDOT as to rights or interests are referred to herein as "**Existing Utility Property Interests**".

(b) If acquisition of any new easement or other interest in real property ("**Replacement Utility Property Interest**") is necessary for the Adjustment of any Owner Utilities, then the Owner shall be responsible for undertaking such acquisition. The Owner shall implement each acquisition hereunder expeditiously so that related Adjustment construction can proceed in accordance with the DB Contractor's Project schedules. The DB Contractor shall be responsible for its share (as specified in Paragraph 4) of the actual and reasonable acquisition costs of any such Replacement Utility Property Interest (including without limitation the Owner's reasonable overhead charges and reasonable legal costs as well as compensation paid to the landowner), excluding any costs attributable to Betterment as described in Paragraph 15(c), and subject to the provisions of Paragraph 15(e); *provided, however*, that all acquisition costs shall be subject to the DB Contractor's prior written approval. Eligible acquisition costs shall be segregated from other costs on the Owner's estimates and invoices. Any such Replacement Utility Property Interest shall have a written valuation and shall be acquired in accordance with applicable Law.

(c) The DB Contractor shall pay its share only for a replacement in kind of an Existing Utility Property Interest (e.g., in width and type), unless a Replacement Utility Property Interest exceeding such standard:

(1) Is required in order to accommodate the Project or by compliance with applicable Law; or

(2) Is called for by the DB Contractor in the interest of overall Project economy.

Any Replacement Utility Property Interest which is not the DB Contractor's responsibility pursuant to the preceding sentence shall be considered Betterment to the extent that it upgrades the Existing Utility Property Interest which it replaces, or in its entirety if the related Owner Utility was not installed pursuant to an Existing Utility Property Interest. Betterment costs shall be solely the Owner's responsibility.

(d) For each Existing Utility Property Interest located within the Project right of way, upon completion of the related Adjustment work and its acceptance by the Owner, the Owner agrees to execute a quitclaim deed or other appropriate documentation relinquishing such Existing Utility Property Interest to TxDOT, unless the affected Owner Utility is remaining in its original location or is being reinstalled in a new location within the area subject to such Existing Utility Property Interest. If the Owner's facilities are remaining within the existing property interest, a Utility Joint Use Acknowledgement will be required. All quitclaim deeds or other relinquishment documents shall be subject to TxDOT's approval as part of its review of the Utility Assembly as described in Paragraph 2. For each such Existing Utility Property Interest relinquished by the Owner, the DB Contractor shall do one (1) of the following to compensate the Owner for such Existing Utility Property Interest, as appropriate:

(1) If the Owner acquires a Replacement Utility Property Interest for the affected Owner Utility, the DB Contractor shall reimburse the Owner for the DB Contractor's share of the Owner's actual and reasonable acquisition costs in accordance with Paragraph 15(b), subject to Paragraph 15(c); or

(2) If the Owner does not acquire a Replacement Utility Property Interest for the affected Owner Utility, the DB Contractor shall compensate the Owner for the DB Contractor's share of the market value of such relinquished Existing Utility Property Interest, as mutually agreed between the Owner and the DB Contractor and supported by a written valuation.

The compensation, if any, provided to the Owner pursuant to either subparagraph (i) or (ii) above shall constitute complete compensation to the Owner for the relinquished Existing Utility Property Interest and any Replacement Utility Property Interest, and not further compensation shall be due to the Owner from the DB Contractor or TxDOT on account of such Existing Utility Property Interest or Replacement Utility Property Interest.

(e) All Utility Joint Use Acknowledgments (UJUA) or Utility Installation Requests, Form 1082 shall be subject to TxDOT approval as part of its review of the Utility Assembly as described in Paragraph 2. A Utility Joint Use Acknowledgment is required where an Existing Utility Property Interest exists and the existing or proposed Utility will remain or be adjusted within the boundaries of the Existing Utility Property Interest. All other accommodations not located on Existing Utility Property Interests will require a Utility Installation Request, Form 1082.

16. **Amendments and Modifications.** This Agreement may be amended or modified only by a written instrument executed by the parties hereto, in accordance with Paragraph 16(a) or Paragraph 16(b) below:

    (a) Except as otherwise provided in Paragraph 16(b), any amendment or modification to this Agreement or the Plans attached hereto shall be implemented by a Utility Adjustment Agreement Amendment ("**UAAA**") in the form of Exhibit B hereto (PFD ROW-U-UAAA-DM). The UAAA form can be used for a new scope of work with concurrence of the DB Contractor and TxDOT as long as the design and construction responsibilities have not changed. Each UAAA is subject to the review and approval of TxDOT, prior to its becoming effective for any purpose and prior to any work being initiated thereunder. The Owner agrees to keep and track costs for each UAAA separately from other work being performed.

    (b) For purposes of this Paragraph 16(b), "**Utility Adjustment Field Modification**" shall mean any horizontal or vertical design change from the Plans included in a Utility Assembly previously approved by TxDOT, due either to design of the Project or to conditions not accurately reflected in the approved Utility Assembly (e.g., shifting the alignment of an 8 inch water line to miss a modified or new roadway drainage structure). A Utility Adjustment Field Modification agreed upon by the DB Contractor and the Owner does not require a UAAA, provided that the modified Plans have been submitted to TxDOT for its review and comment. A minor change (e.g., an additional water valve, an added Utility marker at a ROW line, a change in vertical bend, etc.) will not be considered a Utility Adjustment Field Modification and will not require a UAAA, but shall be shown in the documentation required pursuant to Paragraph 14.

    (c) This Agreement does not alter and shall not be construed in any way to alter the obligations, responsibilities, benefits, rights, remedies, and claims between the DB Contractor and TxDOT to design and construct the Project, including the Adjustment.

17. **Entire Agreement.** This Agreement embodies the entire agreement between the parties and there are no oral or written agreements between the parties or any representations made which are not expressly set forth herein.

18. **Assignment; Binding Effect; TxDOT as Third-Party Beneficiary.** Neither the Owner nor the DB Contractor may assign any of its rights or delegate any of its duties under this Agreement without the prior written consent of the other party and of TxDOT, which consent may not be unreasonably withheld or delayed; *provided, however*, that the DB Contractor may assign any of its rights and/or delegate any of its duties to TxDOT or to any other entity engaged by TxDOT to fulfill the DB Contractor's obligations, at any time without the prior consent of the Owner.

    This Agreement shall bind the Owner, the DB Contractor and their successors and permitted assigns, and nothing in this Agreement nor in any approval subsequently provided by any party hereto shall be construed as giving any benefits, rights, remedies, or claims to any other person, firm, corporation or other entity, including, without limitation, any contractor or other party retained for the Adjustment work or the public in general; *provided, however*, that the Owner and the DB Contractor agree that although TxDOT is not a party to this Agreement, TxDOT is intended to be a third-party beneficiary to this Agreement.

19. **Breach by the Parties.**

(a) If the Owner claims that the DB Contractor has breached any of its obligations under this Agreement, the Owner will notify the DB Contractor and TxDOT in writing of such breach, and the DB Contractor shall have **30 days** following receipt of such notice in which to cure such breach, before the Owner may invoke any remedies which may be available to it as a result of such breach; *provided, however*, that both during and after such period TxDOT shall have the right, but not the obligation, to cure any breach by the DB Contractor. Without limiting the generality of the foregoing:

(1) TxDOT shall have no liability to the Owner for any act or omission committed by the DB Contractor in connection with this Agreement, including without limitation any claimed defect in any design or construction work supplied by the DB Contractor or by its Subcontractors; and

(2) In no event shall TxDOT be responsible for any repairs or maintenance to the Owner Utilities adjusted pursuant to this Agreement.

(b) If the DB Contractor claims that the Owner has breached any of its obligations under this Agreement, the DB Contractor will notify the Owner and TxDOT in writing of such breach, and the Owner shall have **30 days** following receipt of such notice in which to cure such breach, before the DB Contractor may invoke any remedies which may be available to it as a result of such breach.

20. **Traffic Control.** The DB Contractor shall provide traffic control or shall reimburse the Owner for the DB Contractor's share (if any, as specified in Paragraph 4) of the costs for traffic control made necessary by the Adjustment work performed by either the DB Contractor or the Owner pursuant to this Agreement, in compliance with the requirements of the Texas *Manual on Uniform Traffic Control Devices*. Betterment percentages calculated in Paragraph 9 shall also apply to traffic control costs.

21. **Notices.** Except as otherwise expressly provided in this Agreement, all notices or communications pursuant to this Agreement shall be sent or delivered to the following:

Owner:	Address Line #1 Address Line #2 City, State Zip Phone: ( ) - Fax: ( ) -
DB Contractor:	Address Line #1 Address Line #2 City, State Zip Phone: ( ) - Fax: ( ) -

A party sending notice of default of this Agreement to another party shall also send a copy of such notice to TxDOT at the following address:

Texas Department of Transportation
Attention: Project Finance, Debt & Strategic Contracts Division
125 E 11th Street
Austin, TX 78701-2483

Any notice or demand required herein shall be given (a) personally, (b) by certified or registered mail, postage prepaid, return receipt requested, or (c) by reliable messenger or overnight courier to the appropriate address set forth above. Any notice served personally shall be deemed delivered upon receipt, and any notice served by certified or registered mail or by reliable messenger or overnight courier shall be deemed delivered on the date of receipt as shown on the addressee's registry or certification of receipt or on the date receipt is refused as shown on the records or manifest of the U.S. Postal Service or such courier. Any party may designate any other address for this purpose by written notice to all other parties; TxDOT may designate another address by written notice to all parties.

22. **Approvals.** Any acceptance, approval, or any other like action (collectively "**Approval**") required or permitted to be given by the DB Contractor, the Owner or TxDOT pursuant to this Agreement:

(a) Must be in writing to be effective (except if deemed granted pursuant hereto);

(b) Shall not be unreasonably withheld or delayed; and if Approval is withheld, such withholding shall be in writing and shall state with specificity the reason for withholding such Approval, and every effort shall be made to identify with as much detail as possible what changes are required for Approval; and

(c) Except for approvals by TxDOT, and except as may be specifically provided otherwise in this Agreement, shall be deemed granted if no response is provided to the party requesting an Approval within the time period prescribed by this Agreement (or if no time period is prescribed, then **14 calendar days**), commencing upon actual receipt by the party from which an Approval is requested or required, of a request for Approval from the requesting party. All requests for Approval shall be sent out by the requesting party to the other party in accordance with Paragraph 21.

23. **Time.**

(a) Time is of the essence in the performance of this Agreement.

(b) All references to "days" herein shall be construed to refer to calendar days, unless otherwise stated.

(c) No party shall be liable to another party for any delay in performance under this Agreement from any cause beyond its control and without its fault or negligence ("**Force Majeure**"), such as acts of God, acts of civil or military authority, fire, earthquake, strike, unusually severe weather, floods or power blackouts.

24. **Continuing Performance.** In the event of a dispute, the Owner and the DB Contractor agree to continue their respective performance hereunder to the extent feasible in light of the dispute, including paying billings, and such continuation of efforts and payment of billings shall not be construed as a waiver of any legal right.

25. **Equitable Relief.** The DB Contractor and the Owner acknowledge and agree that delays in Adjustment of the Owner Utilities will impact the public convenience, safety and welfare, and that (without limiting the parties' remedies hereunder) monetary damages would be inadequate to compensate for delays in the construction of the Project. Consequently, the parties hereto (and TxDOT as well, as a third-party beneficiary) shall be entitled to specific performance or other equitable relief in the event of any breach of this Agreement which threatens to delay construction of the Project; *provided, however*, that the fact that specific performance or other equitable relief may be granted shall not prejudice any claims for payment or otherwise related to performance of the Adjustment work hereunder.

26. **Authority.** The Owner and the DB Contractor each represent and warrant to the other party that the warranting party possesses the legal authority to enter into this Agreement and that it has taken all actions necessary to exercise that authority and to lawfully authorize its undersigned signatory to execute this Agreement and to bind such party to its terms. Each person executing this Agreement on behalf of a party warrants that he or she is duly authorized to enter into this Agreement on behalf of such party and to bind it to the terms hereof.

27. **Cooperation.** The parties acknowledge that the timely completion of the Project will be influenced by the ability of the Owner (and its contractors) and the DB Contractor to coordinate their activities, communicate with each other, and respond promptly to reasonable requests. Subject to the terms and conditions of this Agreement, the Owner and the DB Contractor agree to take all steps reasonably required to coordinate their respective duties hereunder in a manner consistent with the DB Contractor's current and future construction schedules for the Project.

28. **Termination.** If the Project is canceled or modified so as to eliminate the necessity of the Adjustment work described herein, then the DB Contractor shall notify the Owner in writing and the DB Contractor reserves the right to thereupon terminate this Agreement. Upon such termination, the parties shall negotiate in good faith an amendment that shall provide mutually acceptable terms and conditions for handling the respective rights and liabilities of the parties relating to such termination.

29. **Nondiscrimination.** Each party hereto agrees, with respect to the work performed by such party pursuant to this Agreement that such party shall not discriminate on the grounds of race, color, sex, national origin or disability in the selection and/or retention of contractors and consultants, including procurement of materials and leases of equipment.

30. **Applicable Law, Jurisdiction and Venue.** This Agreement shall be governed by the Laws of the State of Texas, without regard to the Conflict of Laws principles thereof. Venue for any action brought to enforce this Agreement or relating to the relationship between any of the parties shall be the District Court of _____ County, Texas [or the United States District Court for the Western District of Texas (Austin)].

31. **Relationship of the Parties.** This Agreement does not in any way, and shall not be construed to, create a principal/agent or joint venture relationship between the parties hereto and under no circumstances shall the Owner or the DB Contractor be considered as or represent itself to be an agent of the other.

32. **Waiver of Consequential Damages.** No party hereto shall be liable to any other party to this Agreement, whether in contract, tort, equity, or otherwise (including negligence, warranty, indemnity, strict liability, or otherwise) for any punitive, exemplary, special, indirect, incidental, or consequential damages, including, without limitation, loss of profits or revenues, loss of use, claims of customers, or loss of business opportunity.

33. **Captions.** The captions and headings of the various paragraphs of this Agreement are for convenience and identification only, and shall not be deemed to limit or define the content of their respective paragraphs.

34. **Counterparts.** This Agreement may be executed in any number of counterparts. Each such counterpart hereof shall be deemed to be an original instrument but all such counterparts together shall constitute one (1) and the same instrument.

35. **Effective Date.** This Agreement shall become effective upon the later of (a) the date of signing by the last party (either the Owner or DB Contractor) signing this Agreement, and (b) the date of TxDOT's approval as indicated by the signature of TxDOT's representative below.

APPROVED BY:

TEXAS DEPARTMENT OF TRANSPORTATION

By: _____
[Printed Name]

By: _____
Authorized Signature

District Engineer (or designee)

Date: _____

OWNER

By: _____
[Print Owner Name]

By: _____
Duly Authorized Representative

[Title]
[Company]

Date: _____

DB CONTRACTOR

By: _____
[Print Name]

By: _____
Duly Authorized Representative

[Title]
[Company]

Date: _____

County: _____
ROW CSJ No.: _____
Const. CSJ No.: _____
Highway: _____
Fed. Proj. No.: _____
Limits: _____ to _____

EXHIBIT A

PLANS, SPECIFICATIONS, COST ESTIMATES AND ALLOCATION

County: _____
ROW CSJ No.: _____
Const. CSJ No.: _____
Highway: _____
Fed. Proj. No.: _____
Limits: _____ to _____

EXHIBIT B

UTILITY ADJUSTMENT AGREEMENT AMENDMENT
(PFD ROW-U-UAAA-DM)

County: _____
ROW CSJ No.: _____
Const. CSJ No.: _____
Highway: _____
Fed. Proj. No.: _____
Limits: _____ to _____

UTILITY ADJUSTMENT AGREEMENT AMENDMENT
(DB Contractor-Managed)

(**Amendment No. _____ to Agreement No.: _____** -U-_____)

THIS AMENDMENT TO PROJECT UTILITY ADJUSTMENT AGREEMENT (this "Amendment"), by and between, [DB Contractor] hereinafter identified as the "**DB Contractor**" and [Utility Owner], hereinafter identified as the "**Owner**", is as follows:

WITNESSETH

WHEREAS, the STATE of TEXAS, acting by and through the Texas Department of Transportation, hereinafter identified as "**TxDOT**", proposes to construct the project identified above (the "Project", as more particularly described in the "Original Agreement", defined below); and

WHEREAS, pursuant to that certain Design-Build Contract ("DBC") by and between TxDOT and the DB Contractor with respect to the Project, the DB Contractor has undertaken the obligation to design, construct, and potentially maintain the Project, including causing the removal, relocation, or other necessary adjustment of existing Utilities impacted by the Project (collectively, "Adjustment"); and

WHEREAS, the Owner and DB Contractor are parties to that certain executed Project Utility Adjustment Agreement (PUAA) designated by the "Agreement No." indicated above, as amended by previous amendments, if any (the "Original Agreement"), which provides for the Adjustment of certain Utilities owned and/or operated by the Owner (the "Owner Utilities"); and

WHEREAS, the parties are required to utilize this Amendment form in order to modify the Original Agreement to add the Adjustment of Owner Utilities facilities not covered by the Original Agreement; and

WHEREAS, the parties desire to amend the Original Agreement to add additional Owner Utility facility(ies), on the terms and conditions hereinafter set forth.

NOW, THEREFORE, in consideration of the agreements contained herein, the parties hereto agree as follows:

1. **Amendment**. The Original Agreement is hereby amended as follows:

1.1 **Plans**.

(a) The description of the Owner Utilities and the proposed Adjustment of the Owner Utilities in the Original Agreement is hereby amended to add the following Utility facility(ies) ("**Additional Owner Utilities**") and proposed Adjustment(s) to the Owner Utilities described in the Original Agreement *[insert below a description of the affected facilities (by type, size and location) as well as a brief description of the nature of the Adjustment work to be performed (e.g., "adjust 12" waterline from approximately Highway Station 100+00 to approximately Highway Station 200+00)]*: _____.

(b) The Plans, as defined in Paragraph 1 of the Original Agreement, are hereby amended to add thereto the Plans, specifications and cost estimates attached hereto as Exhibit A; and

(c) The Plans attached hereto as Exhibit A, along with this Amendment, shall be submitted upon execution to TxDOT in accordance with Paragraph 2 of the Original Agreement, and Paragraph 2 shall apply to this Amendment and the Plans attached hereto in the same manner as if this Amendment were the Original Agreement. If the Owner claims an Existing Utility Property Interest for any of the Additional Owner Utilities, documentation with respect to such claim shall be submitted to TxDOT as part of this Amendment and the attached Plans, in accordance with Paragraph 15(a) of the Original Agreement.

1.2 **Reimbursement of Owner's Indirect Costs.** For purposes of Paragraph 6 of the Original Agreement, the following terms apply to the Additional Owner Utilities and proposed Adjustment:

(a) DB Contractor agrees to reimburse the Owner its share of the Owner's indirect costs (e.g., engineering, inspection, testing, ROW) as identified in Exhibit A. When requested by the Owner, monthly progress payments will be made. The monthly payment will not exceed 90% of the estimated indirect work done to date. Once the indirect work is complete, final payment of the eligible indirect costs will be made. Intermediate payments shall not be construed as final payment for any items included in the intermediate payment.

(b) The Owner's indirect costs associated with Adjustment of the Owner Utilities shall be developed pursuant to the method checked and described below *[check only one (1) box]*:

☐ (1) Actual related indirect costs accumulated in accordance with:

(i) A work order accounting procedure prescribed by the applicable Federal or State regulatory body; or

(ii) Established accounting procedure developed by the Owner and which the Owner uses in its regular operations;

(either (i) or (ii) referred to as "**Actual Cost**"*)*, or

☐ (2) The agreed sum of $_____ ("**Agreed Sum**") as supported by the analysis of the Owner's estimated costs attached hereto as part of Exhibit A.

1.3 **Advancement of Funds by Owner for Construction Costs.**

(a) Advancement of Owner's share, if any, of estimated costs. Exhibit A shall identify all estimated engineering and construction-related costs, including labor, material, equipment and other miscellaneous construction items. Exhibit A shall also identify the Owner's and DB Contractor's respective shares of the estimated costs.

The Owner shall advance to the DB Contractor its allocated share, if any, of the estimated costs for construction and engineering work to be performed by DB Contractor, in accordance with the following terms:

☐ The Adjustment of the Owner's Utilities does not require advancement of funds.

☐ The Adjustment of the Owner's Utilities does require advancement of funds and the terms agreed to between the DB Contractor and Owner are listed below.

[Insert terms of advance funding to be agreed between DB Contractor and Owner.]

_____

(b) Adjustment Based on Actual Costs or Agreed Sum.

[Check the one (1) appropriate provision, if advancement of funds is required]:

☐ The Owner is responsible for its share of the DB Contractor Actual Cost for the Adjustment, including the identified Betterment. Accordingly, upon completion of all Adjustment work to be performed by both parties pursuant to this Amendment:

(i) The Owner shall pay to the DB Contractor the amount, if any, by which the Actual Cost of the Betterment (as determined in Paragraph 9(b)) *plus* the Actual Cost of Owner's share of the Adjustment (based on the allocation set forth in Exhibit A) exceeds the estimated cost advanced by the Owner; or

(ii) The DB Contractor shall refund to the Owner the amount, if any, by which such advance exceeds such Actual Cost, as applicable.

☐ The Agreed Sum is the agreed and final amount due for the Adjustment, including any Betterment, under this Amendment. Accordingly, no adjustment (either up or down) of such amount shall be made based on Actual Costs.

1.4 **Responsibility for Costs of Adjustment Work.** For purposes of Paragraph 4 of the Original Agreement, responsibility for the Agreed Sum or Actual Cost, as applicable, of all Adjustment work to be performed pursuant to this Amendment shall be allocated between the DB Contractor and the Owner as identified in Exhibit A hereto and in accordance with §203.092 of the Texas Transportation Code. An allocation percentage may be determined by application of an eligibility ratio, if appropriate, as detailed in Exhibit A; *provided however*, that any portion of an Agreed Sum or Actual Cost attributable to Betterment shall be allocated 100% to the Owner in accordance with Paragraph 9 of the Original Agreement.

1.5 **Betterment**.

(a) Paragraph 9(b) (Betterment and Salvage) of the Original Agreement is hereby amended to add the following *[Check the one (1) box that applies, and complete if appropriate]*:

☐ The Adjustment of the Additional Owner Utilities, pursuant to the Plans as amended herein, does not include any Betterment.

☐ The Adjustment of the Additional Owner Utilities, pursuant to the Plans as amended herein, includes Betterment to the Additional Owner Utilities by reason of *[insert explanation, e.g. "replacing 12" pipe with 24" pipe]*: _____.

The DB Contractor has provided to the Owner comparative estimates for (i) all work to be performed by the DB Contractor pursuant to this Amendment, including work attributable to the Betterment, and (ii) the cost to perform such work without the Betterment, which estimates are hereby approved by the Owner. The estimated cost of the DB Contractor work under this Amendment which is attributable to Betterment is $_____, calculated by *subtracting* (ii) from (i). The percentage of the total cost of the DB Contractor work under this Amendment which is attributable to Betterment is _____%, calculated by *subtracting* (ii) from (i), which remainder is *divided* by (i).

(b) If the above Paragraph 1.5(a) identifies Betterment, the Owner shall advance to the DB Contractor, at least **14 days** prior to the date scheduled for commencement of construction for Adjustment of the Additional Owner Utilities, the estimated cost attributable to Betterment as set forth in Paragraph 1.5(a) of this Amendment. If the Owner fails to advance payment to the DB Contractor on

or before the foregoing deadline, the DB Contractor shall have the option of commencing and completing (without delay) the Adjustment work without installation of the applicable Betterment. *[Check the one (1) appropriate provision]*:

☐ The estimated cost stated in Paragraph 1.5(a) of this Amendment is the agreed and final amount due for Betterment under this Amendment, and accordingly no adjustment (either up or down) of such amount shall be made based on actual costs.

☐ The Owner is responsible for the DB Contractor Actual Cost for the identified Betterment. Accordingly, upon completion of all Adjustment work to be performed by both parties pursuant to this Amendment, (i) the Owner shall pay to the DB Contractor the amount, if any, by which the Actual Cost of the Betterment (determined as provided below in this paragraph) exceeds the estimated cost advanced by the Owner, or (ii) the DB Contractor shall refund to the Owner the amount, if any, by which such advance exceeds such Actual Cost, as applicable. Any additional payment by the Owner shall be due within **60 days** after the Owner's receipt of the DB Contractors invoice therefor, together with supporting documentation; any refund shall be due within **60 days** after completion of the Adjustment work under this Amendment. The Actual Cost of Betterment incurred by the DB Contractor shall be calculated by *multiplying* (i) the Betterment percentage stated in Paragraph 1.5(a) of this Amendment, by (ii) the Actual Cost of all work performed by the DB Contractor pursuant to this Amendment (including work attributable to the Betterment), as invoiced by the DB Contractor to the Owner.

(c) The determinations and calculations of Betterment described in this Amendment shall exclude right of way acquisition costs. Betterment in connection with right of way acquisition is addressed in Paragraph 15 of the Original Agreement.

1.6 **Miscellaneous**.

(a) The Owner and the DB Contractor agree to refer to this Amendment, designated by the "Amendment No." and "Agreement Number" indicated on page 1 above, on all future correspondence regarding the Adjustment work that is the subject of this Amendment and to track separately all costs relating to this Amendment and the Adjustment work described herein.

(b) *[Include any other proposed amendments allowed by applicable Law.]*

_____

2. **General.**

(a) All capitalized terms used in this Amendment shall have the meanings assigned to them in the Original Agreement, except as otherwise stated herein.

(b) This Amendment may be executed in any number of counterparts. Each such counterpart hereof shall be deemed to be an original instrument but all such counterparts together shall constitute one (1) and the same instrument.

(c) Except as amended hereby, the Original Agreement shall remain in full force and effect. In no event shall the responsibility, as between the Owner and the DB Contractor, for the preparation of the Plans and the Adjustment of the Owner Utilities be deemed to be amended hereby.

(d) This Amendment shall become effective upon the later of (a) the date of signing by the last party (either the Owner or the DB Contractor) signing this Amendment, and (b) the completion of TxDOT's review and approval as indicated by the signature of TxDOT's representative below.

APPROVED BY:

TEXAS DEPARTMENT OF TRANSPORTATION

By: _____
[Printed Name]

By: _____
Authorized Signature

District Engineer (or designee)

Date: _____

OWNER

By: _____
[Print Name]

By: _____
Duly Authorized Representative Signature

[Title]
[Company]

Date: _____

DB CONTRACTOR

By: _____
[Print Name]

By: _____
Duly Authorized Representative

[Title]
[Company]

Date: _____

County: _____
ROW CSJ No.: _____
Const. CSJ No.: _____
Highway: _____
Fed. Proj. No.: _____
Limits: _____ to _____

PROJECT UTILITY ADJUSTMENT AGREEMENT
(Owner-Managed)

Agreement No.: _____-U-_____

THIS AGREEMENT, by and between [DB Contractor], hereinafter identified as the "**DB Contractor**" and [Utility Owner], hereinafter identified as the "**Owner**", is as follows:

WITNESSETH

WHEREAS, the STATE OF TEXAS, acting by and through the Texas Department of Transportation, hereinafter identified as "TxDOT", is authorized to design, construct, operate, maintain, and improve projects as part of the state highway system throughout the State of Texas, all in conformance with the applicable provisions of Chapters 201, 203, 222, 223, 224 and 228 of the Texas Transportation Code, as amended; and

WHEREAS, TxDOT proposes to construct a project identified as the [Project Name] (the "Project") and classified as either Interstate, Toll or Traditional (meaning eligibility based on existing compensable interest in the land occupied by the facility to be relocated within the proposed highway right of way limits) as indicated below (*check one (1) box*). Reimbursement will be authorized by the type of project selected below in conformance with Transportation Code 203.092,

☐ Interstate

☐ Toll

☐ Traditional

;and

WHEREAS, pursuant to that certain Design-Build Contract ("DBC") by and between TxDOT and the DB Contractor with respect to the Project, the DB Contractor has undertaken the obligation to design, construct, finance, operate and maintain the Project and adhere to all requirements in the DBC; and

WHEREAS, the DB Contractor's duties pursuant to the DBC include causing the relocation, removal, or other necessary adjustment of existing Utilities impacted by the Project (collectively, "Adjustment"), subject to the provisions herein; and

WHEREAS, the Project may receive Federal funding, financing and/or credit assistance; and

WHEREAS, the DB Contractor has notified the Owner that certain of its facilities and appurtenances (the "Owner Utilities") are in locational conflict with the Project (and/or the Ultimate Configuration of the

Project), and the Owner has decided to undertake the Adjustment of the Owner Utilities and agrees that the "Project" will be constructed in accordance with §203.092 of the Texas Transportation Code, as amended, and 23 CFR 645 Subpart A (Utility Relocations, Adjustments and Reimbursement); and

WHEREAS, the Owner Utilities and the proposed Adjustment of the Owner Utilities are described as follows *[insert below a description of the affected facilities (by type, size and location) as well as a brief description of the nature of the Adjustment work to be performed (e.g., "adjust 12" waterline from approximately Highway Station 100+00 to approximately Highway Station 200+00")]:*

_____; and

WHEREAS, the Owner recognizes that time is of the essence in completing the work contemplated herein; and

WHEREAS, the DB Contractor and the Owner desire to implement the Adjustment of the Owner Utilities by entering into this Agreement.

AGREEMENT

NOW, THEREFORE, in consideration of these premises and of the mutual covenants and agreements of the parties hereto and other good and valuable consideration, the receipt and sufficiency of which being hereby acknowledged, the DB Contractor and the Owner agree as follows:

1. **Preparation of Plans.** [*Check one (1) box that applies:*]

☐ The DB Contractor has hired engineering firm(s) acceptable to the Owner to perform all engineering services needed for the preparation of plans, required specifications, and cost estimates, attached hereto as Exhibit A (collectively, the "Plans"), for the proposed Adjustment of the Owner Utilities. The DB Contractor represents and warrants that the Plans conform to the most recent Utility Accommodation Rules issued by the Texas Department of Transportation ("TxDOT"), set forth in 43 Texas Administrative Code, Part 1, Chapter 21, Subchapter C, *et seq*. (the "UAR"). By its execution of this Agreement or by the signing of the Plans, the Owner hereby approves and confirms that the Plans are in compliance with the "standards" described in Paragraph 3(a)(4).

☐ The Owner has provided plans, required specifications and cost estimates, attached hereto as Exhibit A (collectively, the "Plans"), for the proposed Adjustment of the Owner Utilities. The Owner represents and warrants that the Plans conform to the Utility Accommodation Rules issued by the Texas Department of Transportation ("TxDOT"), as set forth in 43 Texas Administrative Code Part 1, Chapter 21, Subchapter C, *et seq*. (the "UAR"). By its execution of this Agreement, the DB Contractor and the Owner hereby approve the Plans. The Owner also has provided to the DB Contractor a Utility plan view map illustrating the location of existing and proposed Utility facilities on the DB Contractor's right of way map of the Project. With regard to its preparation of the Plans, the Owner represents as follows *[check one (1) box that applies]*:

☐ The Owner's employees were utilized to prepare the Plans, and the charges therefore do not exceed the Owner's typical costs for such work.

☐ The Owner utilized consulting engineers to prepare the Plans, and the fees for such work are not based upon a percentage of construction costs. Further, such fees encompass only the work necessary to prepare the Plans for Adjustment of the Owner Utilities described herein, and do not include fees for work done on any other project. The fees of the consulting engineers are reasonable and are comparable to the fees typically charged by consulting engineers in the locale of the Project for comparable work for the Owner.

2. **Review by TxDOT**. The parties hereto acknowledge and agree as follows:

(a) Upon execution of this Agreement by the DB Contractor and the Owner, the DB Contractor will submit this Agreement, together with the attached Plans, to TxDOT for its review and approval as part of a package referred to as a "Utility Assembly". The parties agree to cooperate in good faith to modify this Agreement and/or the Plans, as necessary and mutually acceptable to all parties, to respond to any comments made by TxDOT thereon. Without limiting the generality of the foregoing:

(1) The Owner agrees to respond (with comment and/or acceptance) to any modified Plans and/or Agreement prepared by the DB Contractor in response to TxDOT comments within **14 business days** after receipt of such modifications; and

(2) If the Owner originally prepared the Plans, the Owner agrees to modify the Plans in response to TxDOT comments and to submit such modified Plans to the DB Contractor for its comment and/or approval (and resubmit to TxDOT for its comment and/or approval) within **14 business days** after receipt of TxDOT's comments.

The Owner's failure to timely respond to any modified Plans submitted by the DB Contractor pursuant to this paragraph shall be deemed the Owner's approval of same. If the Owner fails to timely prepare modified Plans which are its responsibility hereunder, then the DB Contractor shall have the right to modify the Plans for the Owner's approval as if the DB Contractor had originally prepared the Plans. The DB Contractor shall be responsible for providing Plans to and obtaining comments on and approval of the Plans from the DB Contractor. The process set forth in this paragraph will be repeated until the Owner, the DB Contractor and TxDOT have all approved this Agreement and the Plans.

(b) The parties hereto acknowledge and agree that TxDOT's review, comments, and/or approval of a Utility Assembly or any component thereof shall constitute TxDOT's approval of the location and manner in which a Utility Assembly will be installed, adjusted, or relocated within the State Highway right of way (the "ROW"), subject to the DB Contractor and Owner's satisfactory performance of the Adjustment work in accordance with the approved Plans. TxDOT has no duty to review Owner facilities or components for their quality or adequacy to provide the intended Utility service.

3. **Design and Construction Standards**.

(a) All design and construction performed for the Adjustment work which is the subject of this Agreement shall comply with and conform to the following:

(1) All applicable local and State Laws, regulations, decrees, ordinances and policies, including the UAR, the Utility Manual issued by TxDOT (to the extent its requirements are mandatory for the Utility Adjustment necessitated by the Project, communicated to the Owner by the DB Contractor or TxDOT), the requirements of the DBC, and the policies of TxDOT;

(2) All Federal Laws, regulations, decrees, ordinances and policies applicable to projects receiving Federal funding, financing and/or credit assistance, including without limitation 23 CFR 645 Subparts A and B and the Buy America provisions of 23 U.S.C § 313 and 23 CFR 635.410. The Utility Owner shall supply, upon request by the DB Contractor or TxDOT, proof of compliance with the aforementioned Laws, rules and regulations prior to the commencement of construction;

(3) The terms of all governmental permits or other approvals, as well as any private approvals of third parties necessary for such work;

(4) The standard specifications, standards of practice, and construction methods (collectively, "standards") which the Owner customarily applies to facilities comparable to the Owner Utilities that are constructed by the Owner or for the Owner by its contractors at the Owner's expense, which standards are current at the time this Agreement is signed by the Owner, and which the Owner has submitted to the DB Contractor in writing; and

(5) Owner agrees that all service meters must be placed outside of the State ROW.

(b) Such design and construction also shall be consistent and compatible with:

(1) The DB Contractor's current design and construction of the Project;

(2) The Ultimate Configuration for the Project; and

(3) Any other utilities being installed in the same vicinity.

The Owner acknowledges receipt from the DB Contractor of Project plans and Ultimate Configuration documents as necessary to comply with the foregoing. In case of any inconsistency among any of the standards referenced in this Agreement, the most stringent standard shall apply.

(c) The plans, specifications, and cost estimates contained in Exhibit A shall identify and detail all Utility facilities that the Owner intends to abandon in place rather than remove, including material type, quantity, size, age, and condition. No facilities containing hazardous or contaminated materials may be abandoned, but shall be specifically identified and removed in accordance with the requirements of subparagraph (a). It is understood and agreed that the DB Contractor shall not pay for the assessment and

remediation or other corrective action relating to soil and ground water contamination caused by the utility facility prior to the removal.

4. **Construction by the Owner; Scheduling**.

(a) The Owner hereby agrees to perform the construction necessary to adjust the Owner Utilities. All construction work hereunder shall be performed in a good and workmanlike manner, and in accordance with the Plans (except as modified pursuant to Paragraph 17). The Owner agrees that during the Adjustment of the Owner Utilities, the Owner and its contractors will coordinate their work with the DB Contractor so as not to interfere with the performance of work on the Project by the DB Contractor or by any other party. "Interfere" means any action or inaction that interrupts, interferes, delays or damages Project work.

(b) The Owner may utilize its own employees or may retain such contractor or contractors as are necessary to adjust the Owner Utilities, through the procedures set forth in Form "Statement Covering Contract Work" attached hereto as Exhibit C. If the Owner utilizes its own employees for the Construction work portion of the Adjustment of Owner Utilities, this form is not required.

(c) The Owner shall obtain all permits necessary for the construction to be performed by the Owner hereunder, and the DB Contractor shall cooperate in that process as needed. The Owner shall submit a traffic control plan to the DB Contractor as required for Adjustment work to be performed on existing road rights of way.

(d) The Owner shall commence its construction for Adjustment of each Owner Utility hereunder promptly after (i) receiving written notice to proceed therewith from the DB Contractor, and (ii) any Project right of way necessary for such Adjustment has been acquired either by DB Contractor (for adjusted facilities to be located within the Project right of way) or by the Owner (for adjusted facilities to be located outside of the Project right of way), or a right-of-entry permitting Owner's construction has been obtained from the landowner by the DB Contractor or by the Owner with the DB Contractor's prior approval. The Owner shall notify the DB Contractor at least 72 hours prior to commencing construction for the Adjustment of each Owner Utility hereunder.

(e) The Owner shall expeditiously stake the survey of the proposed locations of the Owner Utilities being adjusted, on the basis of the final approved Plans. The DB Contractor shall verify that the Owner's Utilities, whether moving to a new location or remaining in place, clear the planned construction of the Project as staked in the field as well as the Ultimate Configuration.

(f) The Owner shall complete all of the Utility reconstruction and relocation work, including final testing and acceptance thereof *[check one (1) box that applies]*:

☐ On or before **[Month] [Day]**, **20[19]**.

☐ A duration not to exceed _____ calendar days upon notice to proceed by the DB Contractor.

(g) The amount of reimbursement due to the Owner pursuant to this Agreement for the affected Adjustment(s) shall be reduced by 10% for each 30-day period (and by a pro rata amount of said 10% for any portion of a 30-day period) by which the final completion and acceptance date for the affected Adjustment(s) exceeds the applicable deadline. The provisions of this Paragraph 4(g) shall not limit any other remedy available to the DB Contractor at Law or in equity as a result of the Owner's failure to meet any deadline hereunder.

The above reduction applies except to the extent due to:

(1) Force Majeure as described in Paragraph 24(c);

(2) Any act or omission of the DB Contractor, if the Owner fails to meet any deadline established pursuant to Paragraph 4(f); or

(3) If the DB Contractor and/or TxDOT determine, in their sole discretion, that a delay in the relocation work is the result of circumstances beyond the control of the Owner or Owner's contractor and the DB Contractor will not reduce the reimbursement.

5. **Costs of the Work**.

(a) The Owner's costs for Adjustment of each Owner Utility shall be derived from:

(1) The accumulated total of costs incurred by the Owner for design and construction of such Adjustment, *plus*

(2) The Owner's other related costs to the extent permitted pursuant to Paragraph 5(b) (including without limitation the eligible engineering costs incurred by the Owner for design prior to execution of this Agreement), *plus*

(3) The Owner's right of way acquisition costs, if any, which are reimbursable pursuant to Paragraph 16.

(b) The Owner's costs associated with Adjustment of the Owner Utilities shall be developed pursuant to the method checked and described below *[check only one (1) box]*:

☐ (1) Actual costs accumulated in accordance with a work order accounting procedure prescribed by the applicable Federal or State regulatory body ("**Actual Cost**");

☐ (2) Actual costs accumulated in accordance with an established accounting procedure developed by the Owner and which the Owner uses in its regular operations ("**Actual Cost**"); or

☐ (3) The agreed sum of $_____ ("**Agreed Sum**"), as supported by the analysis of estimated costs attached hereto as part of Exhibit A.

6. **Responsibility for Costs of Adjustment Work**. The Agreed Sum or Actual Cost, as applicable, of all work to be performed pursuant to this Agreement shall be allocated between the DB Contractor and the Owner as identified in Exhibit A and in accordance with § 203.092 of the Texas Transportation Code. An allocation percentage may be determined by application of an eligibility ratio, if appropriate, as detailed in Exhibit A; *provided, however*, that any portion of an Agreed Sum or Actual Cost attributable to Betterment shall be allocated 100% to the Owner in accordance with Paragraph 10. All costs charged to the DB Contractor by the Owner shall be reasonable and shall be computed using rates and schedules not exceeding those applicable to similar work performed by or for the Owner at the Owner's expense. Payment of the costs allocated to the DB Contractor pursuant to this Agreement (if any) shall be full compensation to the Owner for all costs incurred by the Owner in Adjusting the Owner Utilities (including without limitation costs of relinquishing and/or acquiring right of way).

7. **Billing, Payment, Records and Audits: Actual Cost Method**. The following provisions apply if the Owner's costs are developed under procedure (1) or (2) described in Paragraph 5(b):

   (a) After (i) completion of all Adjustment work to be performed pursuant to this Agreement, (ii) the DB Contractor's final inspection of the Adjustment work by Owner hereunder (and resolution of any deficiencies found), and (iii) receipt of an invoice complying with the applicable requirements of Paragraph 9, the DB Contractor shall pay to the Owner an amount equal to 90% of the DB Contractor's share of the Owner's costs as shown in such final invoice (less amounts previously paid, and applicable credits). After completion of the DB Contractor's audit referenced in Paragraph 7(c) and the parties' mutual determination of any necessary adjustment to the final invoice resulting therefrom, the DB Contractor shall make any final payment due so that total payments will equal the total amount of the DB Contractor's share reflected on such final invoice (as adjusted, if applicable).

   (b) When requested by the Owner and properly invoiced in accordance with Paragraph 9, the DB Contractor shall make intermediate payments to the Owner based upon the progress of the work completed at not more than monthly intervals, and such payments shall not exceed 90% of the DB Contractor's share of the Owner's eligible costs as shown in each such invoice (less applicable credits). Intermediate payments shall not be construed as final payment for any items included in the intermediate payment.

   (c) The Owner shall maintain complete and accurate cost records for all work performed pursuant to this Agreement. The Owner shall maintain such records for four (4) years after receipt of final payment hereunder. The DB Contractor and their respective representatives shall be allowed to audit such records during the Owner's regular business hours. Unsupported charges will not be considered eligible for reimbursement. The parties shall mutually agree upon (and shall promptly implement by payment or refund, as applicable) any financial adjustment found necessary by the DB Contractor's audit. TxDOT, the Federal Highway Administration (FHWA), and their respective representatives also shall be allowed to audit such records upon reasonable notice to the Owner, during the Owner's regular business hours.

8. **Billing and Payment: Agreed Sum Method**. If the Owner's costs are developed under procedure (3) described in Paragraph 5(b), then the DB Contractor shall pay its share of the Agreed Sum to the Owner after completion of:

   (a) All Adjustment work to be performed pursuant to this Agreement;

   (b) The DB Contractor's final inspection of the Adjustment work by Owner hereunder (and resolution of any deficiencies found); and

   (c) The receipt of an invoice complying with the applicable requirements of Paragraph 9.

9. **Invoices**. If the Owner's costs are developed under procedure (1) or (2) described in Paragraph 5(b), then Owner shall list each of the services performed, the amount of time spent and the date on which the service was performed. The original and three (3) copies of each invoice shall be submitted to the DB Contractor at the address for notices stated in Paragraph 22, unless otherwise directed by the DB Contractor pursuant to Paragraph 23, together with:

   (a) Such supporting information to substantiate all invoices as reasonably requested by the DB Contractor; and

   (b) Such waivers or releases of liens as the DB Contractor may reasonably require.

   The Owner shall make commercially reasonable efforts to submit final invoices not later than 120 days after completion of work. Final invoices shall include any necessary quitclaim deeds pursuant to Paragraph 16, and all applicable record drawings accurately representing the Adjustment as installed. The Owner hereby acknowledges and agrees that any right it may have for reimbursement of any of its costs not submitted to the DB Contractor within 12 months following completion of all Adjustment work to be performed by both parties pursuant to this Agreement shall be deemed to have been abandoned and waived. Invoices shall clearly delineate total costs and those costs that are reimbursable pursuant to the terms of this Agreement.

10. **Betterment**.

   (a) For purposes of this Agreement, the term "Betterment" means any upgrading of an Owner Utility being adjusted that is not attributable to the construction of the Project and is made solely for the benefit of and at the election of the Owner, including but not limited to an increase in the capacity, capability, efficiency or function of the adjusted Utility over that provided by the existing Utility facility or an expansion of the existing Utility facility; provided, however, that the following are not considered Betterments:

      (1) Any upgrading which is required for accommodation of the Project;

      (2) Replacement devices or materials that are of equivalent standards although not identical;

      (3) Replacement of devices or materials no longer regularly manufactured with the next highest grade or size;

      (4) Any upgrading required by applicable Laws, regulations or ordinances;

(5) Replacement devices or materials which are used for reasons of economy (e.g., non-stocked items may be uneconomical to purchase); or

(6) Any upgrading required by the Owner's written "standards" meeting the requirements of Paragraph 3(a)(4) and deemed to be of direct benefit to the Project.

[Include the following for fiber optic Owner Utilities only:] Extension of an Adjustment to the nearest splice boxes shall not be considered a Betterment if required by the Owner in order to maintain its written telephony standards.

(b) It is understood and agreed that the DB Contractor will not pay for any Betterments and that the Owner shall not be entitled to payment therefor. No Betterment may be performed in connection with the Adjustment of the Owner Utilities which is incompatible with the Project or the Ultimate Configuration or which cannot be performed within the other constraints of applicable Law and any applicable governmental approvals, including without limitation the scheduling requirements thereunder. Accordingly, the parties agree as follows *[check the one (1) box that applies and complete if appropriate]*:

☐ The Adjustment of the Owner Utilities pursuant to the Plans does not include any Betterment.

☐ The Adjustment of the Owner Utilities pursuant to the Plans includes Betterment to the Owner Utilities by reason of *[insert explanation, e.g. "replacing 12" pipe with 24" pipe]*: _____. The Owner has provided to the DB Contractor comparative estimates for (i) all costs for work to be performed by the Owner pursuant to this Agreement, including work attributable to the Betterment, and (ii) the cost to perform such work without the Betterment, which estimates are hereby approved by the DB Contractor. The estimated amount of the Owner's costs for work hereunder which is attributable to Betterment is $_____, calculated by *subtracting* (ii) from (i). The percentage of the total cost of the Owner's work hereunder which is attributable to Betterment is _____%, calculated by *subtracting* (ii) from (i), which remainder shall be *divided* by (i).

(c) If Paragraph 10(b) identifies Betterment, then the following shall apply:

(1) If the Owner's costs are developed under procedure (3) described in Paragraph 5(b), then the Agreed Sum stated in that Paragraph includes any credits due to the DB Contractor on account of the identified Betterment, and no further adjustment shall be made on account of same.

(2) If the Owner's costs are developed under procedure (1) or (2) described in Paragraph 5(b), the parties agree as follows *[If Paragraph 10(b) identifies Betterment and the Owner's costs are developed under procedure (1) or (2), check the one (1) appropriate provision]*:

☐ The estimated cost stated in Paragraph 10(b) is the agreed and final amount due for Betterment hereunder. Accordingly, each intermediate invoice submitted pursuant to Paragraph 7(b) shall include a credit for an

appropriate percentage of the agreed Betterment amount, proportionate to the percentage of completion reflected in such invoice. The final invoice submitted pursuant to Paragraph 7(a) shall reflect the full amount of the agreed Betterment credit. For each invoice described in this paragraph, the credit for Betterment shall be applied before calculating the DB Contractor's share (pursuant to Paragraph 6) of the cost of the Adjustment work. No other adjustment (either up or down) shall be made based on actual Betterment costs.

☐ The Owner is responsible for the actual cost of the identified Betterment, determined by *multiplying* (a) the Betterment percentage stated in Paragraph 10(b), by (b) the actual cost of all work performed by the Owner pursuant to this Agreement (including work attributable to the Betterment), as invoiced by the Owner to the DB Contractor. Accordingly, each invoice submitted pursuant to either Paragraph 7(a) or Paragraph 7(b) shall credit the DB Contractor with an amount calculated by *multiplying* (x) the Betterment percentage stated in Paragraph 10(b), by (y) the amount billed on such invoice.

(d) The determinations and calculations of Betterment described in this Paragraph 10 shall exclude right of way acquisition costs. Betterment in connection with right of way acquisition is addressed in Paragraph 16.

11. **Salvage**. For any Adjustment from which the Owner recovers any materials and/or parts and retains or sells the same, after application of any applicable Betterment credit, the DB Contractor is entitled to a credit for the salvage value of such materials and/or parts. If the Owner's costs are developed under procedure (1) or (2) described in Paragraph 5(b), then the final invoice submitted pursuant to Paragraph 7(a) shall credit the DB Contractor with the full salvage value. If the Owner's costs are developed under procedure (3) described in Paragraph 5(b), then the Agreed Sum includes any credit due to the DB Contractor on account of salvage.

12. **Utility Investigations**. At the DB Contractor's request, the Owner shall assist the DB Contractor in locating any Utilities (including appurtenances) which are owned and/or operated by Owner and may be impacted by the Project. Without limiting the generality of the foregoing, in order to help assure that neither the adjusted Owner Utilities nor existing, unadjusted Utilities owned or operated by the Owner are damaged during construction of the Project, the Owner shall mark in the field the location of all such Utilities horizontally on the ground in advance of Project construction in the immediate area of such Utilities.

13. **Inspection and Ownership of Owner Utilities**.

(a) The DB Contractor shall have the right, at its own expense, to inspect the Adjustment work performed by the Owner or its contractors, during and upon completion of construction. All inspections of work shall be completed and any comment provided within **five (5) business days** after request for inspection is received.

(b) The Owner shall accept full responsibility for all future repairs and maintenance of said Owner Utilities. In no event shall the DB Contractor or TxDOT become responsible for making any repairs or maintenance, or for discharging the cost of same. The provisions of this Paragraph 13(b) shall not limit any rights which the Owner may have against the DB

Contractor if either party respectively damages any Owner Utility as a result of its respective Project activities.

14. **Design Changes**. The DB Contractor will be responsible for additional Adjustment design and responsible for additional construction costs necessitated by design changes to the Project made after approval of the Plans, upon the terms specified herein.

15. **Field Modifications**. The Owner shall provide the DB Contractor with documentation of any field modifications, including Utility Adjustment Field Modifications as well as minor changes as described in Paragraph 17(b), occurring in the Adjustment of the Owner Utilities.

16. **Real Property Interests**.

(a) The Owner has provided, or upon execution of this Agreement shall promptly provide to the DB Contractor, documentation acceptable to TxDOT indicating any right, title or interest in real property claimed by the Owner with respect to the Owner Utilities in their existing location(s). Such claims are subject to TxDOT's approval as part of its review of the DB Contractor's Utility Assembly as described in Paragraph 2. Claims approved by TxDOT as to rights or interests are referred to herein as "**Existing Utility Property Interests**".

(b) If acquisition of any new easement or other interest in real property ("**Replacement Utility Property Interest**") is necessary for the Adjustment of any Owner Utilities, then the Owner shall be responsible for undertaking such acquisition. The Owner shall implement each acquisition hereunder expeditiously so that related Adjustment construction can proceed in accordance with the DB Contractor's Project schedules. The DB Contractor shall be responsible for its share (if any, as specified in Paragraph 6) of the actual and reasonable acquisition costs of any such Replacement Utility Property Interest (including without limitation the Owner's reasonable overhead charges and reasonable legal costs as well as compensation paid to the landowner), excluding any costs attributable to Betterment as described in Paragraph 16(c), and subject to the provisions of Paragraph 16(e); *provided, however*, that all acquisition costs shall be subject to the DB Contractor's prior written approval. Eligible acquisition costs shall be segregated from other costs on the Owner's estimates and invoices. Any such Replacement Utility Property Interest shall have a written valuation and shall be acquired in accordance with applicable Law.

(c) The DB Contractor shall pay its share only for a replacement in kind of an Existing Utility Property Interest (e.g., in width and type), unless a Replacement Utility Property Interest exceeding such standard:

(1) Is required in order to accommodate the Project or by compliance with applicable Law; or

(2) Is called for by the DB Contractor in the interest of overall Project economy.

Any Replacement Utility Property Interest which is not the DB Contractor's cost responsibility pursuant to the preceding sentence shall be considered a Betterment to the extent that it upgrades the Existing Utility Property Interest which it replaces, or in its

entirety if the related Owner Utility was not installed pursuant to an Existing Utility Property Interest. Betterment costs shall be solely the Owner's responsibility.

(d) For each Existing Utility Property Interest located within the Project right of way, upon completion of the related Adjustment work and its acceptance by the Owner, the Owner agrees to execute a quitclaim deed or other appropriate documentation relinquishing such Existing Utility Property Interest to TxDOT, unless the affected Owner Utility is remaining in its original location or is being reinstalled in a new location within the area subject to such Existing Utility Property Interest. All quitclaim deeds or other relinquishment documents shall be subject to TxDOT's approval as part of its review of the Utility Assembly as described in Paragraph 2. For each Existing Utility Property Interest relinquished by the Owner, the DB Contractor shall do one (1) of the following to compensate the Owner for such Existing Utility Property Interest, as appropriate:

(1) If the Owner acquires a Replacement Utility Property Interest for the affected Owner Utility, the DB Contractor shall reimburse the Owner for the DB Contractor's share of the Owner's actual and reasonable acquisition costs in accordance with Paragraph 16(b) and subject to Paragraph 16(c); or

(2) If the Owner does not acquire a Replacement Utility Property Interest for the affected Owner Utility, the DB Contractor shall compensate the Owner for the DB Contractor's share of the market value of such relinquished Existing Utility Property Interest, as mutually agreed between the Owner and the DB Contractor and supported by a written valuation.

The compensation, if any, provided to the Owner pursuant to either subparagraph (i) or subparagraph (ii) above shall constitute complete compensation to the Owner for the relinquished Existing Utility Property Interest and any Replacement Utility Property Interest, and no further compensation shall be due to the Owner from the DB Contractor or TxDOT on account of such Existing Utility Property Interest or Replacement Utility Property Interest.

(e) All Utility Joint Use Acknowledgments (UJUA) or Utility Installation Requests (UIR), Form 1082 shall be subject to TxDOT approval as part of its review of the Utility Assembly as described in Paragraph 2. A Utility Joint Use Acknowledgment is required where an Existing Utility Property Interest exists and the existing or proposed Utility will remain or be adjusted within the boundaries of the Existing Utility Property Interest. All other accommodations not located on Existing Utility Property Interests will require a Utility Installation Request, Form 1082.

17. **Amendments and Modifications**. This Agreement may be amended or modified only by a written instrument executed by the parties hereto, in accordance with Paragraph 17(a) or Paragraph 17(b) below:

(a) Except as otherwise provided in Paragraph 17(b), any amendment or modification to this Agreement or the Plans attached hereto shall be implemented by a Utility Adjustment Agreement Amendment ("**UAAA**") in the form of Exhibit B hereto (PFD ROW-U-UAAA-OM). The UAAA form can be used for a new scope of work with concurrence of the DB Contractor and TxDOT as long as the Design and Construction responsibilities have not changed. Each UAAA is subject to the review and approval of TxDOT, prior to

its becoming effective for any purpose and prior to any work being initiated thereunder. The Owner agrees to keep and track costs for each UAAA separately from other work being performed.

(b) For purposes of this Paragraph 17(b), "**Utility Adjustment Field Modification**" shall mean any horizontal or vertical design change from the Plans included in a Utility Assembly previously approved by TxDOT, due either to design of the Project or to conditions not accurately reflected in the approved Utility Assembly (e.g., shifting the alignment of an 8 inch water line to miss a modified or new roadway drainage structure). A Utility Adjustment Field Modification agreed upon by the DB Contractor and the Owner does not require a UAAA, provided that the modified Plans have been submitted to TxDOT for its review and comment. A minor change (e.g., an additional water valve, an added Utility marker at a ROW line, a change in vertical bend, etc.) will not be considered a Utility Adjustment Field Modification and will not require a UAAA, but shall be shown in the documentation required pursuant to Paragraph 15.

18. **Entire Agreement**. This Agreement embodies the entire agreement between the parties and there are no oral or written agreements between the parties or any representations made which are not expressly set forth herein.

19. **Assignment; Binding Effect; TxDOT as Third Party Beneficiary**. The Owner and the DB Contractor may not assign any of its rights or delegate any of its duties under this Agreement without the prior written consent of the other parties and of TxDOT, which consent may not be unreasonably withheld or delayed; *provided, however*, that the DB Contractor may assign any of its rights and/or delegate any of its duties to TxDOT or to any other entity with which TxDOT contracts to fulfill the DB Contractor's obligations at any time without the prior consent of the Owner.

This Agreement shall bind the Owner, the DB Contractor and their successors and permitted assigns, and nothing in this Agreement nor in any approval subsequently provided by any party hereto shall be construed as giving any benefits, rights, remedies, or claims to any other person, firm, corporation or other entity, including, without limitation, any contractor or other party retained for the Adjustment work or the public in general; *provided, however*, that the Owner and the DB Contractor agree that although TxDOT is not a party to this Agreement, TxDOT is intended to be a third-party beneficiary to this Agreement.

20. **Breach by the Parties**.

(a) If the Owner claims that the DB Contractor has breached any of its obligations under this Agreement, the Owner will notify the DB Contractor and TxDOT in writing of such breach, and the DB Contractor shall have **30 days** following receipt of such notice in which to cure such breach, before the Owner may invoke any remedies which may be available to it as a result of such breach; *provided, however*, that both during and after such period TxDOT shall have the right, but not the obligation, to cure any breach by the DB Contractor. Without limiting the generality of the foregoing:

(1) TxDOT shall have no liability to the Owner for any act or omission committed by the DB Contractor in connection with this Agreement; and

(2) In no event shall TxDOT be responsible for any repairs or maintenance to the Owner Utilities adjusted pursuant to this Agreement.

(b) If the DB Contractor claims that the Owner has breached any of its obligations under this Agreement, the DB Contractor will notify the Owner and TxDOT in writing of such breach, and the Owner shall have **30 days** following receipt of such notice in which to cure such breach, before the DB Contractor or the DB Contractor may invoke any remedies which may be available to it as a result of such breach.

21. **Traffic Control**. The DB Contractor shall provide traffic control or shall reimburse the Owner for the DB Contractor's share (if any, as specified in Paragraph 6) of the costs for traffic control made necessary by the Adjustment work performed by either the DB Contractor or the Owner pursuant to this Agreement, in compliance with the requirements of the Texas Manual on *Uniform Traffic Control Devices*. Betterment percentages calculated in Paragraph 10 shall also apply to the traffic control costs.

22. **Notices**. Except as otherwise expressly provided in this Agreement, all notices or communications pursuant to this Agreement shall be sent or delivered to the following:

Owner:
Address Line #1
Address Line #2
City, State Zip
Phone: ( ) -
Fax: ( ) -

DB Contractor:
Address Line #1
Address Line #2
City, State Zip
Phone: ( ) -
Fax: ( ) -

A party sending a notice of default of this Agreement to another party shall also send a copy of such notice to TxDOT at the following address:

Texas Department of Transportation
Attention: Project Finance, Debt & Strategic Contracts Division
125 E. 11th Street
Austin, Texas 78701-2483

Any notice or demand required herein shall be given (a) personally, (b) by certified or registered mail, postage prepaid, return receipt requested, or (c) by reliable messenger or overnight courier to the appropriate address set forth above. Any notice served personally shall be deemed delivered upon receipt and served by certified or registered mail or by reliable messenger or overnight courier shall be deemed delivered on the date of receipt as shown on the addressee's registry or certification of receipt or on the date receipt is refused as shown on the records or manifest of the U.S. Postal Service or such courier. Any party may designate any other address for this purpose by written notice to all other parties; TxDOT may designate another address by written notice to all parties.

23. **Approvals**. Any acceptance, approval, or any other like action (collectively "**Approval**") required or permitted to be given by either the DB Contractor or the Owner pursuant to this Agreement:

    (a) Must be in writing to be effective (except if deemed granted pursuant hereto);

    (b) Shall not be unreasonably withheld or delayed; and if Approval is withheld, such withholding shall be in writing and shall state with specificity the reason for withholding such Approval, and every effort shall be made to identify with as much detail as possible what changes are required for Approval; and

    (c) Except for approvals by TxDOT, and except as may be specifically provided otherwise in this Agreement, shall be deemed granted if no response is provided to the party requesting an Approval within the time period prescribed by this Agreement (or if no time period is prescribed, then **14 calendar days**), commencing upon actual receipt by the party from which an Approval is requested or required, of a request for Approval from the requesting party. All requests for Approval shall be sent out by the requesting party to the other party in accordance with Paragraph 22.

24. **Time; Force Majeure**.

    (a) Time is of the essence in the performance of this Agreement.

    (b) All references to "days" herein shall be construed to refer to calendar days, unless otherwise stated.

    (c) No party shall be liable to another party for any delay in performance under this Agreement from any cause beyond its control and without its fault or negligence ("**Force Majeure**"), such as acts of God, acts of civil or military authority, fire, earthquake, strike, unusually severe weather, floods or power blackouts. If any such event of Force Majeure occurs, the Owner agrees, if requested by the DB Contractor, to accelerate its efforts hereunder if reasonably feasible in order to regain lost time, so long as the DB Contractor agrees to reimburse the Owner for the reasonable and actual costs of such efforts.

25. **Continuing Performance**. In the event of a dispute, the Owner and the DB Contractor agree to continue their respective performance hereunder to the extent feasible in light of the dispute, including paying billings, and such continuation of efforts and payment of billings shall not be construed as a waiver of any legal right.

26. **Equitable Relief**. The DB Contractor and the Owner acknowledge and agree that delays in Adjustment of the Owner Utilities will impact the public convenience, safety and welfare, and that (without limiting the parties' remedies hereunder) monetary damages would be inadequate to compensate for delays in the construction of the Project. Consequently, the parties hereto (and TxDOT as well, as a third party beneficiary) shall be entitled to specific performance or other equitable relief in the event of any breach of this Agreement which threatens to delay construction of the Project; *provided, however*, that the fact that specific performance or other equitable relief may be granted shall not prejudice any claims for payment or otherwise related to performance of the Adjustment work hereunder.

27. **Authority**. The Owner and the DB Contractor each represent and warrant to the other party that the warranting party possesses the legal authority to enter into this Agreement and that it has taken all actions necessary to exercise that authority and to lawfully authorize its undersigned signatory to execute this Agreement and to bind such party to its terms. Each person executing this Agreement on behalf of a party warrants that he or she is duly authorized to enter into this Agreement on behalf of such party and to bind it to the terms hereof.

28. **Cooperation**. The parties acknowledge that the timely completion of the Project will be influenced by the ability of the Owner (and its contractors) and the DB Contractor to coordinate their activities, communicate with each other, and respond promptly to reasonable requests. Subject to the terms and conditions of this Agreement, the Owner and the DB Contractor agree to take all steps reasonably required to coordinate their respective duties hereunder in a manner consistent with the DB Contractor's current and future construction schedules for the Project. The Owner further agrees to require its contractors to coordinate their respective work hereunder with the DB Contractor.

29. **Termination**. If the Project is canceled or modified so as to eliminate the necessity of the Adjustment work described herein, then the DB Contractor shall notify the Owner in writing and the DB Contractor reserves the right to thereupon terminate this Agreement. Upon such termination, the parties shall negotiate in good faith an amendment that shall provide mutually acceptable terms and conditions for handling the respective rights and liabilities of the parties relating to such termination.

30. **Nondiscrimination**. Each party hereto agrees, with respect to the work performed by such party pursuant to this Agreement that such party shall not discriminate on the grounds of race, color, sex, national origin or disability in the selection and/or retention of contractors and consultants, including procurement of materials and leases of equipment.

31. **Applicable Law, Jurisdiction and Venue**. This Agreement shall be governed by the Laws of the State of Texas, without regard to the conflict of laws principles thereof. Venue for any action brought to enforce this Agreement or relating to the relationship between any of the parties shall be the District Court of _____ County, Texas [or the United States District Court for the Western District of Texas (Austin)].

32. **Relationship of the Parties.** This Agreement does not in any way, and shall not be construed to, create a principal/agent or joint venture relationship between the parties hereto and under no circumstances shall the Owner or the DB Contractor be considered as or represent itself to be an agent of the other.

33. **Waiver of Consequential Damages**. No party hereto shall be liable to any other party to this Agreement, whether in contract, tort, equity, or otherwise (including negligence, warranty, indemnity, strict liability, or otherwise), for any punitive, exemplary, special, indirect, incidental, or consequential damages, including, without limitation, loss of profits or revenues, loss of use, claims of customers, or loss of business opportunity.

34. **Captions**. The captions and headings of the various paragraphs of this Agreement are for convenience and identification only, and shall not be deemed to limit or define the content of their respective paragraphs.

35. **Counterparts**. This Agreement may be executed in any number of counterparts. Each such counterpart hereof shall be deemed to be an original instrument but all such counterparts together shall constitute one (1) and the same instrument.

36. **Effective Date**. This Agreement shall become effective upon the later of (a) the date of signing by the last party (either the Owner or the DB Contractor) signing this Agreement, and (b) the date of TxDOT's approval as indicated by the signature of TxDOT's representative below.

APPROVED BY:

TEXAS DEPARTMENT OF TRANSPORTATION

By: _____
[Printed Name]

By: _____
Authorized Signature

District Engineer (or designee)

Date: _____

OWNER

By: _____
[Print Owner Name]

By: _____
Duly Authorized Representative

[Title]
[Company]

Date: _____

DB CONTRACTOR

By: _____
[Print Name]

By: _____
Duly Authorized Representative

[Title]
[Company]

Date: _____

County: _____
ROW CSJ No.: _____
Const. CSJ No.: _____
Highway: _____
Fed. Proj. No.: _____
Limits: _____ to _____

EXHIBIT A

PLANS, SPECIFICATIONS, COST ESTIMATES AND ALLOCATION

County: _____
ROW CSJ No.: _____
Const. CSJ No.: _____
Highway: _____
Fed. Proj. No.: _____
Limits: _____ to _____

EXHIBIT B

UTILITY ADJUSTMENT AGREEMENT AMENDMENT
(PFD ROW-U-UAAA-OM)

County: _____
ROW CSJ No.: _____
Const. CSJ No.: _____
Highway: _____
Fed. Proj. No.: _____
Limits: _____ to _____

UTILITY ADJUSTMENT AGREEMENT AMENDMENT
(Owner-Managed)

(**Amendment No. _____ to Agreement No.**: _____- U -_____)

THIS AMENDMENT TO PROJECT UTILITY ADJUSTMENT AGREEMENT (this "Amendment"), by and between, [DB Contractor] hereinafter identified as the "**DB Contractor**" and [Utility Owner], hereinafter identified as the "**Owner**", is as follows:

WITNESSETH

WHEREAS, the STATE of TEXAS, acting by and through the Texas Department of Transportation, hereinafter identified as "**TxDOT**", proposes to construct the project identified above (the "Project", as more particularly described in the "Original Agreement", defined below); and

WHEREAS, pursuant to that certain Design-Build Contract ("DBC") by and between TxDOT and the DB Contractor with respect to the Project, the DB Contractor has undertaken the obligation to design, construct, and potentially maintain the Project, including causing the removal, relocation, or other necessary adjustment of existing Utilities impacted by the Project (collectively, "Adjustment"); and

WHEREAS, the Owner and DB Contractor are parties to that certain executed Project Utility Adjustment Agreement (PUAA) designated by the "Agreement No." indicated above, as amended by previous amendments, if any (the "Original Agreement"), which provides for the Adjustment of certain Utilities owned and/or operated by the Owner (the "Owner Utilities"); and

WHEREAS, the parties are required to utilize this Amendment form in order to modify the Original Agreement to add the Adjustment of Owner Utilities facilities not covered by the Original Agreement; and

WHEREAS, the parties desire to amend the Original Agreement to add additional Owner Utility facility(ies), on the terms and conditions hereinafter set forth.

NOW, THEREFORE, in consideration of the agreements contained herein, the parties hereto agree as follows:

1. **Amendment**. The Original Agreement is hereby amended as follows:

Plans.

(a) The description of the Owner Utilities and the proposed Adjustment of the Owner Utilities in the Original Agreement is hereby amended to add the following Utility facility(ies) ("**Additional Owner Utilities**") and proposed Adjustment(s) *[insert below a*

description of the affected facilities (by type, size and location) as well as a brief description of the nature of the Adjustment work to be performed (e.g., "adjust 12" waterline from approximately Highway Station 100+00 to approximately Highway Station 200+00")]: _____.

(b) The Plans, as defined in Paragraph 1 of the Original Agreement, are hereby amended to add thereto the Plans, specifications and cost estimates attached hereto as Exhibit A.

(c) The Plans attached hereto as Exhibit A, along with this Amendment, shall be submitted upon execution to TxDOT in accordance with Paragraph 2 of the Original Agreement, and Paragraph 2 shall apply to this Amendment and the Plans attached hereto in the same manner as if this Amendment were the Original Agreement. If the Owner claims an Existing Utility Property Interest for any of the Additional Owner Utilities, documentation with respect to such claim shall be submitted to TxDOT as part of this Amendment and the attached Plans, in accordance with Paragraph 16(a) of the Original Agreement.

(d) Paragraph 4(f) of the Original Agreement is hereby amended to add the following deadline for the Adjustment of the Additional Owner Utilities *[check one (1) box that applies]*:

☐ Owner shall complete all of the Utility reconstruction and relocation work, including final testing and acceptance thereof, on or before **[Month] [Day], 2019**.

☐ Owner shall complete all of the Utility reconstruction and relocation work, including final testing and acceptance thereof, within _____ **calendar days** after delivery to Owner of a notice to proceed by DB Contractor;

(e) For purposes of Paragraph 5(b) of the Original Agreement, the Owner's costs associated with Adjustment of the Additional Owner Utilities shall be developed pursuant to the method checked and described below *[check only one (1) box]*:

☐ (1) Actual costs accumulated in accordance with a work order accounting procedure prescribed by the applicable Federal or State regulatory body ("**Actual Cost**");

☐ (2) Actual costs accumulated in accordance with an established accounting procedure developed by the Owner and which the Owner uses in its regular operations ("**Actual Cost**"); or

☐ (3) The agreed sum of $_____("**Agreed Sum**"), as supported by the analysis of estimated costs attached hereto as part of Exhibit A.

(f) For purposes of Paragraph 6 of the Original Agreement, responsibility for the Agreed Sum or Actual Cost, as applicable, of all Adjustment work to be performed pursuant to this Amendment shall be allocated between the DB Contractor and the Owner as identified in Exhibit A and in accordance with §203.092 of the Texas Transportation Code. An allocation percentage may be determined by application of an eligibility ratio,

if appropriate, as detailed in Exhibit A; *provided, however*, that any portion of an Agreed Sum or Actual Cost attributable to Betterment shall be allocated 100% to the Owner in accordance with Paragraph 10 of the Original Agreement.

(g) Paragraph 10(b) of the Original Agreement is hereby amended to add the following *[Check the one (1) box that applies]*:

☐ The Adjustment of the Additional Owner Utilities, pursuant to the Plans as amended herein, does not include any Betterment.

☐ The Adjustment of the Additional Owner Utilities, pursuant to the Plans as amended herein, includes Betterment to the Additional Owner Utilities by reason of *[insert explanation, e.g. "replacing 12" pipe with 24" pipe]*: _____.

The Owner has provided to the DB Contractor comparative estimates for (i) all costs for work to be performed by the Owner pursuant to this Amendment, including work attributable to the Betterment, and (ii) the cost to perform such work without Betterment, which estimates are hereby approved by the DB Contractor. The estimated amount of the Owner's costs for work under this Agreement which is attributable to Betterment is $_____, calculated by *subtracting* (ii) from (i). The percentage of the total cost of the Owner's work hereunder which is attributable to Betterment is _____%, calculated by *subtracting* (ii) from (i) which remainder shall be *divided* by (i).

(h) The following shall apply to any Betterment described in Paragraph 1(g) of this Amendment:

(i) If the Owner's costs are developed under procedure (3) described in Paragraph 1(e) of this Amendment, then the Agreed Sum stated in that Paragraph includes any credits due to the DB Contractor on account of the identified Betterment, and no further adjustment shall be made on account of same.

(ii) If the Owner's costs are developed under procedure (1) or (2) described in Paragraph 1(e) of this Amendment, the parties agree as follows *[check the one (1) appropriate provision]*:

☐ The estimated cost stated in Paragraph 1(g) of this Amendment is the agreed and final amount due for Betterment under this Amendment. Accordingly, each intermediate invoice submitted for Adjustment(s) of the Additional Owner Utilities pursuant to Paragraph 7(b) of the Original Agreement shall credit the DB Contractor with an appropriate amount of the agreed Betterment amount, proportionate to the percentage of completion reflected in such invoice. The final invoice submitted for Adjustment(s) of the Additional Owner Utilities pursuant to Paragraph 7(a) of the Original Agreement shall reflect the full amount of the agreed Betterment credit. For each invoice described in this paragraph, the credit for Betterment shall be applied before calculating the DB Contractor's share (pursuant to Paragraph 1(e) of this Amendment) of the cost of the Adjustment work. No other adjustment (either up or down) shall be made based on actual Betterment costs.

☐ The Owner is responsible for the Actual Cost of the identified Betterment, determined by *multiplying* (a) the Betterment percentage stated in Paragraph 1(g) of this Amendment, by (b) the actual cost of all work performed by the Owner pursuant to this Amendment (including work attributable to the Betterment), as invoiced by the Owner to the DB Contractor. Accordingly, each invoice submitted for Adjustment of the Additional Owner Utilities pursuant to either Paragraph 7(a) or Paragraph 7(b) of the Original Agreement shall credit the DB Contractor with an amount calculated by *multiplying* (x) the Betterment percentage stated in Paragraph 1(g) of this Amendment, by (y) the amount billed on such invoice.

(i) The determinations and calculations of Betterment described in this Amendment shall exclude right of way acquisition costs. Betterment in connection with ROW acquisition is addressed in Paragraph 16 of the Original Agreement.

(j) Owner and the DB Contractor agree to refer to this Amendment, designated by the "Amendment No." and "Agreement number" indicated on page 1 above, on all future correspondence regarding the Adjustment work that is the subject of this Amendment and to track separately all costs relating to this Amendment and the Adjustment work described herein.

(k) *[Include any other proposed amendments in compliance with the applicable Law.]*

_____

2. **General**.

(a) All capitalized terms used in this Amendment shall have the meanings assigned to them in the Original Agreement, except as otherwise stated herein.

(b) This Amendment may be executed in any number of counterparts. Each such counterpart hereof shall be deemed to be an original instrument but all such counterparts together shall constitute one (1) and the same instrument.

(c) Except as amended hereby, the Original Agreement shall remain in full force and effect. In no event shall the responsibility, as between the Owner and the DB Contractor, for the preparation of the Plans and the Adjustment of the Owner Utilities be deemed to be amended hereby.

(d) This Amendment shall become effective upon the later of (a) the date of signing by the last party (either the Owner or the DB Contractor) signing this Amendment, and (b) the completion of TxDOT's review and approval as indicated by the signature of TxDOT's representative below.

APPROVED BY:

TEXAS DEPARTMENT OF TRANSPORTATION

By: _____
[Printed Name]

By: _____
Authorized Signature

District Engineer (or designee)

Date: _____

OWNER

By: _____
[Print Owner Name]

By: _____
Duly Authorized Representative

[Title]
[Company]

Date: _____

DB CONTRACTOR

By: _____
[Print Name]

By: _____
Duly Authorized Representative

[Title]
[Company]

Date: _____

County: _____
ROW CSJ No.: _____
Const. CSJ No.: _____
Highway: _____
Fed. Proj. No.: _____
Limits: _____ to _____

EXHIBIT C

STATEMENT COVERING CONTRACT WORK

STATEMENT COVERING UTILITY CONSTRUCTION CONTRACT WORK

(AS APPEARING IN ESTIMATE)

U-No. _____

District: _____

County: _____ ROW CSJ No.: _____

Federal Project No.: _____ Highway No.: _____

I, _____, a duly authorized and qualified representative of _____, hereinafter referred to as **Owner**, am fully cognizant of the facts and make the following statements in respect to work which will or may be done on a contract basis as appears in the estimate to which this statement is attached.

It is more economical and/or expedient for **Owner** to contract this adjustment, or **Owner** is not adequately staffed or equipped to perform the necessary work on this project with its own forces to the extent as indicated on the estimate.

Procedure to be Used in Contracting Work

☐ A. Solicitation for bids is to be accomplished through open advertising and contract is to be awarded to the lowest qualified bidder who submits a proposal in conformity with the requirements and specifications for the work to be performed.

☐ B. Solicitation for bids is to be accomplished by circulating to a list of pre-qualified contractors or known qualified contractors and such contract is to be awarded to the lowest qualified bidder who submits a proposal in conformity with the requirements and specifications for the work to be performed. Such presently known contractors are listed below:

1. _____
2. _____
3. _____
4. _____
5. _____

☐ C. The work is to be performed under an existing continuing contract under which certain work is regularly performed for **Owner** and under which the lowest available costs are developed. (If only part of the contract work is to be done under an existing contract, give detailed information by attachment hereto.)

☐ D. The utility proposes to contract outside the foregoing requirements and therefore evidence in

support of its proposal is attached to the estimate in order to obtain the concurrence of the State, and the Federal Highway Administration Division Engineer where applicable, prior to taking action thereon (approval of the agreement shall be considered as approval of such proposal).

☐ E. The utility plans and specifications, with the consent of the State, will be included in the construction contract awarded by the State.

_____ _____
[Signature of Officer/Representative] Date

_____
[Title of Officer/Representative]

DB Contractor's Utility Design Coordinator

Utility No Conflict Sign-Off Form

Utility Design Coordinator: _____

Date plans received: _____

Utility Company: _____

Assembly "U" number: _____

Type of Utilities: _____

Date on Utility's plans: _____ No. of sheets in Utility's plans: _____

I, _____, the Utility Design Coordinator (UDC) on behalf of the DB Contractor (_____) certify that a review of the above referenced Utility Plans concerning the proposed highway improvements on the _____ has been completed and have not identified any conflicts between the Utility's proposed relocation and any design features.

Design features include but are not limited to pavement structures, drainage facilities, bridges, retaining walls, traffic signals, illumination, signs, foundations, duct/conduit, ground boxes, erosion control facilities, water quality facilities and other DB Contractor-Managed Utilities.

Any design changes to the _____ after the signing of this form will be coordinated through the DB Contractor's Utility Manager and the affected Utility Owner.

☐ Check box if any areas of concern and insert comments below:

Utility Design Coordinator: (UDC)

_____ (Signature)

_____ Date

_____ (Print Name)

Utility Coordination Firm:

_____ (Print Name)

This form must be completed/signed and included in each Utility Assembly submitted to the Texas Department of Transportation.

DB Contractor's Utility Manager

Utility No Conflict Sign-Off Form

Utility Manager: _____

Date plans received: _____

Utility Company: _____

Assembly "U" number: _____

Type of Utilities: _____

Date on Utility's plans: _____ No. of sheets in Utility's plans: _____

I, _____, the Utility Manager (UM) working on behalf of the DB Contractor (_____) certify that a review of the above referenced Utility Plans concerning the proposed highway improvements on the _____ has been completed and have not identified any conflicts between the Utility's proposed relocation and any existing and/or proposed Utilities.

The proposed Utility Plans conform to Title 43 of the Texas Administrative Code, Section 21.31 – 21.56 of the Utility Accommodation Rules.

☐ Check box if any areas of concern and insert comments below:

Utility Manager: (UM)

_____ (Signature) _____ Date

_____ (Print Name)

Utility Design Coordinator: (UDC)

_____ (Signature) _____ Date

_____ (Print Name)

Utility Coordination Firm:

_____ (Print Name)

This form must be completed/signed and included in each Utility Assembly submitted to the Texas Department of Transportation.

Utility Installation Request

PERMIT NUMBER		
GLOBAL POSITIONING SYSTEM COORDINATES (GPS) NORTH AMERICAN DATUM 1983, (1993 ADJUSTMENT) IN DECIMAL DEGREES(DD)		
	LATITUDE (DD)	LONGITUDE (DD)
BEGIN		
END		

To the Texas Transportation Commission

c/o District Engineer, Texas Department of Transportation Date: _____

_____, Texas

Formal notice is hereby given that _____

proposes to place a _____

line within the right of way of _____, RM _____, Displ. _____, to RM _____, Displ. _____, in _____ County Texas, MNT Sec. No. _____ as follows: (give location, length, general design, etc. Use additional sheet as needed)

_____

_____

_____

We will construct and maintain the line on the highway right of way as shown on the attached drawing and in accordance with the rules, regulations and policies of the Texas Department of Transportation (TxDOT), and all governing laws, including, but not limited to, the "Texas Engineering Practice Act," "Federal Clean Water Act," the "National Endangered Species Act," "Americans with Disabilities Act," and the "Federal Historic Preservation Act." Upon request by TxDOT at any time, we will submit to TxDOT proof of compliance with all governing laws, rules and regulations before commencement of construction. Plans shall include the design, proposed location, vertical elevations, and horizontal alignments of the facility based on the department's survey datum, the relationship to existing highway facilities and the right of way line, traffic safety and access procedures, and location of existing utilities that may be affected by the proposed utility facility. The location and description of the proposed line and appurtenances is more fully shown by a complete set of drawings attached to this Utility Installation Request (Request). We will give plans to TxDOT for each future proposed modification or expansion to our facility and TxDOT will have 30 days to review and approve the plans prior to commencement of the work. A new Request may be required as a condition of approval. Our organization will use Best Management Practices to minimize erosion and sedimentation resulting from the proposed installation, and we will revegetate the project area as indicated under "Revegetation Special Provisions." We will also ensure that traffic control measures complying with applicable portions of the Texas Manual of Uniform Traffic Control Devices will be installed and maintained for the duration of this installation.

When installing, modifying or maintaining our utility on controlled access facilities, we shall conform to the Texas Transportation Code, Title 6 Roadways, Chapter 203, Subchapter C, Control of Access, §203.031 (http://www.statutes. legis.state.tx.us/). We shall limit access for servicing this installation to access via (a) frontage roads where provided, (b) nearby or adjacent public roads or streets, (c) trails along or near the highway right of way lines, connecting only to an intersecting road; from any one or all of which entry may be made to the outer portion of the highway right of way for normal service and maintenance operations. Our rights of access to the through traffic roadways and ramps shall be subject to the same rules and regulations that apply to the general public.

It is expressly understood that TxDOT does not purport hereby to grant any right, claim, title or easement in or upon highway right of way. TxDOT may require us to relocate this line, subject to the provisions of governing laws, by giving us at least 30 days written notice. We understand a new Request will be required for the relocation. We will notify TxDOT prior to commencement of any operation which requires pruning of trees so that TxDOT may provide specifications to govern performance of work, including trimming, topping, tree balance, type of cuts, painting cuts and

clean up. We understand that these specifications are intended to preserve TxDOT's considerable investment in highway beautification plantings and by reducing damage due to trimming and to protect known endangered species.

Our installation shall not damage any part of the roadway structure or associated appurtenances. We will make adequate provisions to cause minimum inconveniences to the traveling public and adjacent property owners. We will not open-cut driveways or intersecting roadways without specific written permission from the owner.

Following approval, we will begin construction on or after _____
Month / Day / Year

We understand TxDOT may place additional provisions and requirements as listed below, based upon, but not limited to, the type of utility being installed, local site conditions, soil types and traffic.

Additional Provisions and Requirements (for TxDOT input only)
• **General Special Provisions:**
☒ Are attached.
☐ Are not attached.
• **As-built Plans/Certifications of Construction:**
☐ Are required and shall be certified as accurate by an authorized representative of the company.
☐ Are required and shall be signed and sealed by a State of Texas Licensed Professional Engineer.
☐ Are not required
☐ Certification that utility was installed as approved
• **Re-vegetation Special Provisions:** In order to minimize erosion and sedimentation resulting from the proposed installation, the project area will be re-vegetated:
☐ In accordance with TxDOT's Standard Specification Item 164 which specifies the appropriate grass seed mix to be used; **or**
☐ As indicated on the attachment.
TxDOT Representative to be notified 48 hours prior to beginning construction:

If approved, we understand we will assume all risks associated with this installation within the TxDOT right of way. These risks include injuries to our workers, damage to contiguous utility lines that may be in the area and injuries or damage resulting from our failure to properly install and maintain the line.

If the character, use or function of our installation is materially changed from that approved under this Request, we will notify TxDOT within 30 days after the change. In the event of a voluntary or involuntary loss of public utility status, or other legal authority for longitudinal placement of the utility facility in the highway, or there is an abandonment of the facility without the approval of TxDOT, we will, at our expense, remove the unauthorized portion of the facility from the right of way.

If installation of the line is not begun prior to the 91st calendar day from date of issuance, we acknowledge that, unless otherwise extended, TxDOT's approval of this Request will automatically **expire**, and we will be required to resubmit our Request. All Request submissions, whether due to expiration of approval under this paragraph or new Requests for modifications and relocations shall be in accordance with the governing laws, rules, regulations and policies existing at the time of submission. In the event we fail to comply with any or all of the requirements as set forth in this Request, the State may take such action as it deems appropriate to compel our compliance.

By signing as/for the requestor below, I certify that I am authorized to represent the requestor, that I agree to the provisions and requirements included in this Utility Installation Request, and our commencement of construction will further attest to our review and acceptance of said additional provisions and requirements.

REQUESTOR	**APPROVED BY TXDOT**
Date:	Date:
By:	By:
Signature:	Signature:
Title:	Title: **District Engineer (or designee)**
Address:	Address:
City State Zip Code	City State Zip Code
( )	
Area Code Telephone Number	Area Code Telephone Number

GENERAL SPECIAL PROVISION

1. Requestor agrees to perform all project coordination, scheduling, notifications, permit requirements and submittals through TxDOT's designated design-build contractor or Developer listed below:

[Insert contractors contact information]

UTILITY JOINT USE ACKNOWLEDGMENT
REIMBURSABLE UTILITY ADJUSTMENT

Agreement No.: _____

ROW CSJ:	_____	County:	_____
District:	_____	Highway:	_____
Fed. Proj. No.:	_____	Limits:	
Projected Letting Date:	_____	From _____ to _____	

WHEREAS, the State of Texas, ("**State**"), acting by and through the Texas Department of Transportation ("**TxDOT**"), proposes to make certain highway improvements on that section of the above-indicated highway; and

WHEREAS, the _____, ("**Utility**"), proposes to adjust or relocate certain of its facilities, if applicable, and retain title to any property rights it may have on, along or across, and within or over such limits of the highway right of way as indicated by the location map attached hereto.

NOW, THEREFORE, in consideration of the covenants and acknowledgments herein contained, the parties mutually agree as follows:

It is agreed that joint usage for both highway and utility purposes will be made of the area within the highway right of way limits as such area is defined and to the extent indicated on the aforementioned plans or sketches. Nothing in this Acknowledgment shall serve to modify or extinguish any compensable property interest vested in the **Utility** within the above described area. If the facilities shown in the aforementioned plans need to be altered or modified or new facilities constructed to either accommodate the proposed highway improvements or as part of **Utility's** future proposed changes to its own facilities, **Utility** agrees to notify **TxDOT** at least 30 days prior thereto, and to furnish necessary plans showing location and type of construction, unless an emergency situation occurs and immediate action is required. If an emergency situation occurs and immediate action is required, **Utility** agrees to notify **TxDOT** promptly. If such alteration, modification or new construction is in using said highway, **TxDOT** shall have the right, after receipt of such notice, to prescribe such regulations as necessary for the protection of the highway facility and the traveling public using said highway. Such regulations shall not extend, however, to requiring the placement of intended overhead lines underground or the routing of any lines outside of the area of joint usage above described.

If **Utility's** facilities are located along a controlled access highway, **Utility** agrees that ingress and egress for servicing its facilities will be limited to frontage roads where provided, nearby or adjacent public roads and streets, or trails along or near the highway right of way lines which only connect to an intersecting road. Entry may be made to the outer portion of the highway right of way from any one or all access points. Where supports, manholes or other appurtenances of the **Utility's** facilities are located in medians or interchange areas, access from the through-traffic roadways or ramps will be allowed by permit issued by the **State** to the **Utility** setting forth the conditions for policing and other controls to protect highway users. In an emergency situation, if the means of access or service operations as herein provided will not permit emergency repairs as required for the safety and welfare of the public, the **Utility** shall have a temporary right of access to and from the through-traffic roadways and ramps as necessary to accomplish the required repairs, provided **TxDOT** is notified immediately highway traffic. Except as expressly provided herein, the **Utility's** rights of access to the through-traffic roadways and/or ramps shall be subject to the same rules and regulations that apply to the general public.

If **Utility's** facilities are located along a non-controlled access highway, the **Utility's** rights of ingress and egress to the through-traffic roadways and/or ramps are subject to the same rules and regulations that apply to the general public.

Participation in actual costs incurred by the Utility for any future adjustment, removal or relocation of utility facilities required by highway construction shall be in accordance with applicable laws of the State of Texas.

Utility will, by written notice, advise **TxDOT** of the beginning and completion dates of the adjustment, removal or relocation, and thereafter, agrees to perform such work diligently, and to conclude said adjustment, removal or relocation by the stated completion date. The completion date shall be extended for delays caused by events outside **Utility's** control, including an event of Force Majeure, which shall include a strike, war or act of war (whether an actual declaration of war is made or not), insurrection, riot, act of public enemy, accident, fire, flood or other act of God, sabotage, or any other event in which **Utility** has exercised all due care in the prevention thereof so that the causes or other events are beyond the control and without the fault or negligence of **Utility**.

It is expressly understood that **Utility** conducts the new installation, adjustment, removal and/or relocation at its own risk and that **TxDOT** makes no warranties or representations regarding the existence or location of utilities currently within its right of way.

The **Utility** and the **State**, by execution of this Acknowledgment, do not waive or relinquish any right that they may have under the law.

The signatories to this Acknowledgment warrant that each has the authority to enter into this Acknowledgment on behalf of the party represented.

IN WITNESS WHEREOF, the parties hereto have affixed their signatures.

UTILITY

Utility: _____
Name of Utility

By: _____
Authorized Signature

_____
Print or Type Name

Title: _____

Date: _____

EXECUTION RECOMMENDED:

_____
District Engineer (or designee), Dallas District

THE STATE OF TEXAS

Executed and approved for the Texas Transportation Commission for the purpose and effect of activating and/or carrying out the orders, established policies or work programs heretofore approved and authorized by the Texas Transportation Commission.

By: _____
District Engineer (or designee)

Date: _____

Texas Department of Transportation

DESIGN-BUILD SPECIFICATIONS

Items 10-30

Attachment 15-1

Possession and Use Agreement for Transportation Purposes with Additional Payment of Independent Consideration

November 9, 2018

POSSESSION AND USE AGREEMENT FOR TRANSPORTATION PURPOSES WITH ADDITIONAL PAYMENT OF INDEPENDENT CONSIDERATION

STATE OF TEXAS	§	ROW CSJ:
	§	Parcel No.:
COUNTY OF	§	Project No.:

This Possession and Use Agreement For Transportation Purposes (the "Agreement") between the State of Texas, acting by and through the Texas Department of Transportation (the "State") , and (the "Grantor" whether one or more), grants to the State, its contractors, agents and all others deemed necessary by the State, an irrevocable right to possession and use of the Grantor's property for the purpose of constructing a portion of Highway No. (the "Highway Construction Project"). The property subject to this Agreement is described more fully in field notes and plat map (attached as "Exhibit A") and made a part of this Agreement by reference (the "Property").

1. For the consideration paid by the State which is set forth in Paragraphs 2 and 3 below, the receipt and sufficiency of which is acknowledged, the Grantor grants, bargains, sells and conveys to the State of Texas the right of entry and exclusive possession and use of the Property for the purpose of constructing a highway and appurtenances thereto and the right to remove any improvements. Authorized activities include surveying, inspection, environmental studies, archeological studies, clearing, demolition, construction of permanent improvements, relocating, replacing, and improving existing utility facilities, locating new utility facilities, and other work required to be performed in connection with the Highway Construction Project. This Possession and Use Agreement will extend to the State, its contractors and assigns, owners of any existing utilities on the Property and those which may be lawfully permitted on the Property by the State in the future, and all others deemed necessary by the State for the purpose of the Highway Construction Project. This grant will allow the construction, relocation, replacement, repair, improvement, operation and maintenance of utilities on the Property.

2. In full consideration for this irrevocable grant of possession and use and other Grantor covenants, warranties, and obligations under this Agreement, the State will tender to the Grantor the sum of Dollars ($). The Grantor agrees that this sum represents adequate and full compensation for the possession and use of the Property. The State will be entitled to take possession and use of the Property upon tender of payment. The parties agree that the sum tendered represents percent of the State's approved value, which assumes no adverse environmental conditions affecting the value of the Property. The approved value is the State's determination of the just compensation owed to the Grantor for the real property interest to be acquired by the State in the Property, encumbered with the improvements thereon, if any, and damages to the remainder, if any, save and except all oil, gas and sulphur. The parties agree that the sum tendered to Grantor will be deducted from any final settlement amount, Special Commissioners' award or court judgment. In the event the amount of the final settlement or judgment for acquisition of the Property is less than the amount the State has paid for the possession and use of the Property, then the Grantor agrees that the original amount tendered represents an overpayment for the difference and, upon written notice from the State, the Grantor will promptly refund the overpayment to the State.

3. As additional consideration, the State will tender to the Grantor the sum of Dollars ($), the receipt and sufficiency of which is acknowledged. The parties agree that the sum tendered under this Paragraph 3:

   (i) is independent consideration for the possession and use of Grantor's Property and represents no part of the State's compensation to be paid for the anticipated purchase of the Property; and
   (ii) will not be refunded to the State upon any acquisition of the Property by the State.

4. The effective date of this Agreement will be the date on which payment pursuant to Paragraphs 2 and 3 above was tendered to the Grantor by the State, or disbursed to the Grantor by a title company acting as escrow agent for the transaction, (the "Effective Date").

5. The Grantor warrants and represents that the title to the Property is free and clear of all liens and encumbrances or that proper releases will be executed for the Property prior to funds being disbursed under this Agreement. The Grantor further warrants that no other person or entity owns an interest in the fee title to the Property and further agrees to indemnify the State from all unreleased or undisclosed liens, claims or encumbrances affecting the Property.

6. The parties agree that the valuation date for determining the amount of just compensation for the real property interest proposed to be acquired by the State in the Property, for negotiation or eminent domain proceeding purposes, will be the Effective Date of this Agreement.

7. This Agreement is made with the understanding that the State will continue to proceed with acquisition of a real property interest in the Property. The Grantor reserves all rights of compensation for the title and interest in and to the Property which the Grantor holds as of the time immediately prior to the Effective Date of this Agreement. This Agreement shall in no way prejudice the Grantor's rights to receive full and just compensation as allowed by law for all of the Grantor's interests in and to the Property to be acquired by the State, encumbered with the improvements thereon, if any, and damages, if any, to the remainder of the Grantor's interest in any larger tract of which the Property is a part (the "Remainder"), if any; all as the Property exists on the Effective Date of this Agreement. The State's removal or construction of improvements on the Property shall in no way affect the fair market value of the Property in determining compensation due to the Grantor in the eminent domain proceedings. There will be no project impact upon the appraised value of the Property. This grant will not prejudice the Grantor's rights to any relocation benefits for which Grantor may be eligible.

8. In the event the State institutes or has instituted eminent domain proceedings, the State will not be liable to the Grantor for interest upon any award or judgment as a result of such proceedings for any period of time prior to the date of the award. Payment of any interest may be deferred by the State until entry of judgment.

9. The purpose of this Agreement is to allow the State to proceed with its Highway Construction Project without delay and to allow the Grantor to have the use at this time of a percentage of the estimated compensation for the State's acquisition of a real property interest in the Property. The Grantor expressly acknowledges that the proposed Highway Construction Project is for a valid public use and voluntarily waives any right the Grantor has or may have, known or unknown, to contest the jurisdiction of the court in any condemnation proceeding for acquisition of the Property related to the Highway Construction Project, based upon claims that the condemning authority has no authority to

acquire the Property through eminent domain, has no valid public use for the Property, or that acquisition of the Property is not necessary for the public use.

10. The Grantor reserves all of the oil, gas and sulphur in and under the land herein conveyed but waives all right of ingress and egress to the surface for the purpose of exploring, developing, mining or drilling. The extraction of oil, gas and minerals may not affect the geological stability of the surface. Nothing in this reservation will affect the title and rights of the State to take and use all other minerals and materials thereon, and thereunder.

11. The undersigned Grantor agrees to pay as they become due, all ad valorem property taxes and special assessments assessed against Property, including prorated taxes for the year in which the State takes title to the Property.

12. Notwithstanding the acquisition of right of possession to the Property by the State in a condemnation proceeding by depositing the Special Commissioners' award into the registry of the court, less any amounts tendered to the Grantor pursuant to Paragraph 2 above, this Agreement shall continue to remain in effect until the State acquires title to the Property either by negotiation, settlement, or final court judgment.

13. This Agreement will also extend to and bind the heirs, devisees, executors, administrators, legal representatives, successors in interest and assigns of the parties.

14. It is agreed the State will record this document.

15. Other conditions: .

To have and to hold the Agreement herein described and conveyed, together with all the rights and appurtenances belonging to the State of Texas and its assigns forever, for the purposes and subject to the limitations set forth above.

GRANTOR:

By: _____

Printed Name: _____

Title: _____
(if GRANTOR is an entity other than an individual person)

Date: _____

By: _____

Printed Name: _____

Title: _____
(if GRANTOR is an entity other than an individual person)

Date: _____

Acknowledgement

State of Texas
County of

This instrument was acknowledged before me on _____

by_____.

_____
Notary Public's Signature

Corporate Acknowledgment

State of Texas
County of

This instrument was acknowledged before me on _____by

_____, _____

of _____, a _____

corporation, on behalf of said corporation.

_____
Notary Public's Signature

THE STATE OF TEXAS

Executed by and approved for the Texas Transportation Commission for the purpose and effect of activating and/or carrying out the orders, established policies or work programs heretofore approved and authorized by the Texas Transportation Commission.

By: _____
Right of Way Manager

Date:_____

Texas Department of Transportation

DESIGN-BUILD SPECIFICATIONS

Items 10-30

Attachment 15-2

Possession and Use Agreement for Transportation Purposes

November 9, 2018

POSSESSION AND USE AGREEMENT FOR TRANSPORTATION PURPOSES

STATE OF TEXAS	§	ROW CSJ:
	§	Parcel No.:
COUNTY OF	§	Project No.:

This Possession and Use Agreement For Transportation Purposes (the "Agreement") between the State of Texas, acting by and through the Texas Department of Transportation (the "State") , and (the "Grantor" whether one or more), grants to the State, its contractors, agents and all others deemed necessary by the State, an irrevocable right to possession and use of the Grantor's property for the purpose of constructing a portion of Highway No. (the "Highway Construction Project"). The property subject to this Agreement is described more fully in field notes and plat map (attached as "Exhibit A") and made a part of this Agreement by reference (the "Property").

1. For the consideration paid by the State which is set forth in Paragraph 2 below, the receipt and sufficiency of which is acknowledged, the Grantor grants, bargains, sells and conveys to the State of Texas the right of entry and exclusive possession and use of the Property for the purpose of constructing a highway and appurtenances thereto and the right to remove any improvements. Authorized activities include surveying, inspection, environmental studies, archeological studies, clearing, demolition, construction of permanent improvements, relocating, replacing, and improving existing utility facilities, locating new utility facilities, and other work required to be performed in connection with the Highway Construction Project. This Possession and Use Agreement will extend to the State, its contractors and assigns, owners of any existing utilities on the Property and those which may be lawfully permitted on the Property by the State in the future, and all others deemed necessary by the State for the purpose of the Highway Construction Project. This grant will allow the construction, relocation, replacement, repair, improvement, operation and maintenance of utilities on the Property.

2. In full consideration for this irrevocable grant of possession and use and other Grantor covenants, warranties, and obligations under this Agreement, the State will tender to the Grantor the sum of Dollars ($). The Grantor agrees that this sum represents adequate and full compensation for the possession and use of the Property. The State will be entitled to take possession and use of the Property upon tender of payment. The parties agree that the sum tendered represents percent of the State's approved value, which assumes no adverse environmental conditions affecting the value of the Property. The approved value is the State's determination of the just compensation owed to the Grantor for the real property interest to be acquired by the State in the Property, encumbered with the improvements thereon, if any, and damages to the remainder, if any, save and except all oil, gas and sulphur. The parties agree that the sum tendered to Grantor will be deducted from any final settlement amount, Special Commissioners' award or court judgment. In the event the amount of the final settlement or judgment for acquisition of the Property is less than the amount the State has paid for the possession and use of the Property, then the Grantor agrees that the original amount tendered represents an overpayment for the difference and, upon written notice from the State, the Grantor will promptly refund the overpayment to the State.

3. The effective date of this Agreement will be the date on which payment pursuant to Paragraph 2 above

was tendered to the Grantor by the State, or disbursed to the Grantor by a title company acting as escrow agent for the transaction, (the "Effective Date").

4. The Grantor warrants and represents that the title to the Property is free and clear of all liens and encumbrances or that proper releases will be executed for the Property prior to funds being disbursed under this Agreement. The Grantor further warrants that no other person or entity owns an interest in the fee title to the Property and further agrees to indemnify the State from all unreleased or undisclosed liens, claims or encumbrances affecting the Property.

5. The parties agree that the valuation date for determining the amount of just compensation for the real property interest proposed to be acquired by the State in the Property, for negotiation or eminent domain proceeding purposes, will be the Effective Date of this Agreement.

6. This Agreement is made with the understanding that the State will continue to proceed with acquisition of a real property interest in the Property. The Grantor reserves all rights of compensation for the title and interest in and to the Property which the Grantor holds as of the time immediately prior to the Effective Date of this Agreement. This Agreement shall in no way prejudice the Grantor's rights to receive full and just compensation as allowed by law for all of the Grantor's interests in and to the Property to be acquired by the State, encumbered with the improvements thereon, if any, and damages, if any, to the remainder of the Grantor's interest in any larger tract of which the Property is a part (the "Remainder"), if any; all as the Property exists on the Effective Date of this Agreement. The State's removal or construction of improvements on the Property shall in no way affect the fair market value of the Property in determining compensation due to the Grantor in the eminent domain proceedings. There will be no project impact upon the appraised value of the Property. This grant will not prejudice the Grantor's rights to any relocation benefits for which Grantor may be eligible.

7. In the event the State institutes or has instituted eminent domain proceedings, the State will not be liable to the Grantor for interest upon any award or judgment as a result of such proceedings for any period of time prior to the date of the award. Payment of any interest may be deferred by the State until entry of judgment.

8. The purpose of this Agreement is to allow the State to proceed with its Highway Construction Project without delay and to allow the Grantor to have the use at this time of a percentage of the estimated compensation for the State's acquisition of a real property interest in the Property. The Grantor expressly acknowledges that the proposed Highway Construction Project is for a valid public use and voluntarily waives any right the Grantor has or may have, known or unknown, to contest the jurisdiction of the court in any condemnation proceeding for acquisition of the Property related to the Highway Construction Project, based upon claims that the condemning authority has no authority to acquire the Property through eminent domain, has no valid public use for the Property, or that acquisition of the Property is not necessary for the public use.

9. The Grantor reserves all of the oil, gas and sulphur in and under the land herein conveyed but waives all right of ingress and egress to the surface for the purpose of exploring, developing, mining or drilling. The extraction of oil, gas and minerals may not affect the geological stability of the surface. Nothing in this reservation will affect the title and rights of the State to take and use all other minerals and materials thereon, and thereunder.

10. The undersigned Grantor agrees to pay as they become due, all ad valorem property taxes and special assessments assessed against Property, including prorated taxes for the year in which the State takes title to the Property.

11. Notwithstanding the acquisition of right of possession to the Property by the State in a condemnation proceeding by depositing the Special Commissioners' award into the registry of the court, less any amounts tendered to the Grantor pursuant to Paragraph 2 above, this Agreement shall continue to remain in effect until the State acquires title to the Property either by negotiation, settlement, or final court judgment.

12. This Agreement will also extend to and bind the heirs, devisees, executors, administrators, legal representatives, successors in interest and assigns of the parties.

13. It is agreed the State will record this document.

14. Other conditions: .

To have and to hold the Agreement herein described and conveyed, together with all the rights and appurtenances belonging to the State of Texas and its assigns forever, for the purposes and subject to the limitations set forth above.

GRANTOR:

By: _____

Printed Name: _____

Title: _____
(if GRANTOR is an entity other than an individual person)

Date: _____

By: _____

Printed Name: _____

Title: _____
(if GRANTOR is an entity other than an individual person)

Date: _____

THE STATE OF TEXAS

Executed by and approved for the Texas Transportation Commission for the purpose and effect of activating and/or carrying out the orders, established policies or work programs heretofore approved and authorized by the Texas Transportation Commission.

By: _____
Right of Way Manager

Date:_____

Acknowledgement

State of Texas
County of

This instrument was acknowledged before me on _____

by_____.

_____
Notary Public's Signature

Corporate Acknowledgment

State of Texas
County of

This instrument was acknowledged before me on _____by

_____, _____

of _____, a _____

corporation, on behalf of said corporation.

_____
Notary Public's Signature

Texas Department of Transportation

DESIGN-BUILD SPECIFICATIONS

Items 10-30

Attachment 27-1

Baseline Performance and Measurement Table During Construction

November 9, 2018

DESIGN-BUILD SPECIFICATIONS ATTACHMENT 27-1 - BASELINE PERFORMANCE AND MEASUREMENT TABLE DURING CONSTRUCTION

ELEMENT CATEGORY	REF	ELEMENT	PERFORMANCE OBJECTIVE	DEFECT REMEDY PERIOD			INSPECTION AND MEASUREMENT METHOD	REF	MEASUREMENT RECORD	TARGET
				Cat 1	Cat 1	Cat 2				
				Hazard Mitigation	Permanent Remedy	Permanent Repair				
0) ROADWAY - EXISTING PAVEMENT WITHIN MAINTENANCE LIMITS										
	0.1	Obstructions and Debris	Roadway and clear zone free from obstructions and debris	2 hrs	N/A	N/A	Visual Inspection	0.1.1	Number of obstructions and debris	Nil
	0.2	Pavement	All roadways have a smooth surface course (including bridge decks, covers, gratings, frames and boxes) with adequate skid resistance and free from Defects.	24 hrs	28 days	28 days	Failures including potholes, base failures, punchouts and concrete pavement failures	0.2.1	Occurrence of any failure	Nil
	0.3	Temporary Pavement/Cross Overs	Crossovers and other paved areas are free of Defects.	24 hrs	28 days	28 days	Failures including potholes, base failures, punchouts and concrete pavement failures	0.3.1	Occurrence of any failure	Nil
	0.4	Edge Dropoffs	No edge dropoffs	24 hrs	28 days	28 days	Physical measurement of edge drop-off level compared to adjacent surface	0.4.1	Instances of edge drop-off greater than 2" (Number)	Nil
1) ROADWAY - NEW ALIGNMENTS ON RECONSTRUCTED PAVEMENT WITHIN MAINTENANCE LIMITS										
							Unless stated otherwise, measurements shall be conducted using procedures, techniques, and measuring equipment consistent with TxDOT's Pavement Management Information System Rater's Manual. Unless otherwise stated, pavement performance measurement records relate to 0.1-mile sections as described in the Pavement Management Information System Rater's Manual.			
	1.1	Ruts	All roadways are free from surface depressions in wheel path exceeding measurement record thresholds.	24 hours	28 days	28 days	a. Depth as measured using an automated device in compliance with TxDOT Standards.	1.1.1	Percentage of wheel path length with ruts greater than 1/4" in depth in each Performance Section. • Mainlanes, shoulders, and ramps - less than or equal to 3% • Cross streets - less than or equal to 3% • Frontage roads - less than or equal to 10%	100%
							b. 10-ft straight edge used to measure rut depth for localized areas.	1.1.2	No depth of rut at any location greater than 1/2".	100%
	1.2	Ride quality	All roadways have a smooth surface course (including bridge deck approaches, covers, gratings, frames and boxes).	24 hours	28 days	28 days	a. Measurement of International Roughness Index (IRI) according to TxDOT standard Tex-1001-S, Operating Inertial Profilers and Evaluating Pavement Profiles.	1.2.1	Section 1: For 100% of all Performance Sections measured excluding Performance Sections with bridge deck and/or bridge approach slab, average IRI is less than or equal to: • Mainlanes, ramps - 95" per mile • Cross Streets - 95" per mile • Frontage roads - 105" per mile Section 2A: For 100% of all Performance Sections measured excluding Performance Sections with bridge deck and/or bridge approach slab, average IRI is less than or equal to no more than 30 in/mi increase above the IRI measured after completing the Next Generation Concrete Surface treatment during the construction phase.	100%

ELEMENT CATEGORY	REF	ELEMENT	PERFORMANCE OBJECTIVE	DEFECT REMEDY PERIOD			INSPECTION AND MEASUREMENT METHOD	REF	MEASUREMENT RECORD	TARGET
				Cat 1	Cat 1	Cat 2				
				Hazard Mitigation	Permanent Remedy	Permanent Repair				
							b. 10-ft straightedge used to measure discontinuities for localized areas.	1.2.2	For 100% of all Performance Sections measured in localized areas, excluding bridge decks and the 100' length of pavement on either side of the bridge decks, maximum 1/8" variation of the pavement surface from the testing edge of the straightedge between any two straightedge contact points with the pavement surface.	100%
	1.2	Ride Quality						1.2.3	For 100% of all Performance Sections that include a bridge deck and/or bridge approach slab, maximum 1/4" variation of the pavement surface from the testing edge of the straightedge between any two straightedge contact points with the pavement surface, measured at any location within the 100 feet length of pavement on either side of the bridge deck. For clarification this measurement shall allow one contact point of the straightedge on the traveled surface supported by the structure and the other contact point on the pavement approach to the structure.	100%
							a. Measurement of International Roughness Index (IRI) according to TxDOT standard Tex-1001-S, Operating Inertial Profilers and Evaluating Pavement Profiles.	1.2.4	For 100% of all mainlane Performance Sections that include a bridge deck and/or bridge approach slab, excluding the IRI profile lengths on bridge deck and the 100 feet of pavement on either side of the bridge deck, average IRI for each Performance Section is less than or equal to 95" per mile.	100%
								1.2.5	For 100% of all Performance Sections, no localized roughness deviations calculated in accordance with the method set forth in Section 7 of TEX-1001-S exceeding 0.15" or less than -0.15" (positive deviations are bumps and negative deviations are dips).	100%
	1.3	Not used								
	1.4	Not used								
	1.5	Not used								
	1.6	Failures	All roadways are free from failures.	24 hours	28 days	N/A	Physical measurement	1.6.1	No failures exceeding the failure criteria set forth in the TxDOT PMIS Rater's Manual, including potholes, base failures, punchouts and jointed concrete pavement failures.	100%
	1.7	Edge drop-offs	All roadways are free from edge drop-offs exceeding measurement record thresholds.	24 hours	28 days	28 days	Physical measurement	1.7.1	No edge drop-off greater than 2".	100%
	1.8	Wet weather crash performance	Road users warned of potential skidding hazards.	24 hours	28 days	N/A	Visual inspection	1.8.1	Road Users warned of potential skidding hazard where a requirement for corrective action is identified.	100%
	1.9	Joints in concrete	All joints exceeding measurement record thresholds in concrete paving are sealed. No tied longitudinal joint separation exceeding measurement record thresholds.	24 hours	28 days	28 days	Visual inspection	1.9.1	No unsealed joints with width greater than 1/4".	100%
								1.9.2	No tied longitudinal joint width greater than 1/4"	100%

ELEMENT CATEGORY	REF	ELEMENT	PERFORMANCE OBJECTIVE	DEFECT REMEDY PERIOD			INSPECTION AND MEASUREMENT METHOD	REF	MEASUREMENT RECORD	TARGET
				Cat 1	Cat 1	Cat 2				
				Hazard Mitigation	Permanent Remedy	Permanent Repair				
			No longitudinal or transverse joint discontinuity / faulting exceeding measurement record thresholds.					1.9.3	No individual longitudinal or transverse joint with discontinuity / faulting greater than 1/4" between two sides of any joint.	100%
			No expansion joint separation exceeding measurement record thresholds.					1.9.4	No expansion joint width greater than 1.0".	100%

ELEMENT CATEGORY	REF	ELEMENT	PERFORMANCE OBJECTIVE	DEFECT REMEDY PERIOD			INSPECTION AND MEASUREMENT METHOD	REF	MEASUREMENT RECORD	TARGET
				Cat 1	Cat 1	Cat 2				
				Hazard Mitigation	Permanent Remedy	Permanent Repair				
2) DRAINAGE										
	2.1	Pipes, ditches, channels, catch basins, inlets, manholes and outfalls	Each element of the drainage system is maintained in its proper function by cleaning, clearing and/or emptying as appropriate including any vegetation, debris and silt from the point at which water drains from the travel way to the outfall or drainage way.	24 hours	28 days	28 days	Visual inspection	2.1.1	Performance objective met.	100%
	2.2	Drainage treatment devices	Drainage treatment and balancing systems, flow and spillage control devices function correctly, are free of silt and debris and their location and means of operation is recorded adequately to permit their correct operation in Emergency.	24 hours	28 days	28 days	Visual inspection	2.2.1	Performance objective met.	100%
	2.3	Travel way	The travel way is free from water to the extent that such water would represent a hazard because of its position or depth.	24 hours	28 days	6 months	Visual inspection	2.3.1	Performance objective met.	100%
	2.4	Discharge systems	Surface water discharge systems perform their proper function and discharge to groundwater and waterways complies with the relevant legislation and permits.	24 hours	28 days	3 months	Visual inspection	2.4.1	Performance objective met.	100%
	2.5	Protected species	Named species and habitats are protected.	24 hours	28 days	6 months	Visual inspection	2.5.1	Performance objective met.	100%
	2.6	Erosion	Address erosion greater than 12” deep along ditches, swales, ponds, and channels.	24 hours	28 days	28 days	Visual inspection	2.6.1	Performance objective met.	100%
	2.7	Channels and ditches – Permanent Erosion Control Measures	Where permanent erosion control measures such as rock or concrete riprap are utilized: free of undermined or damaged erosion control measures.	24 hours	28 days	28 days	Visual inspection	2.7.1	Performance objective met.	100%

ELEMENT CATEGORY	REF	ELEMENT	PERFORMANCE OBJECTIVE	DEFECT REMEDY PERIOD			INSPECTION AND MEASUREMENT METHOD	REF	MEASUREMENT RECORD	TARGET
				Cat 1	Cat 1	Cat 2				
				Hazard Mitigation	Permanent Remedy	Permanent Repair				
3) STRUCTURES										
	3.1	Structure components (Structures having an opening measured along the center of the roadway of more than 20 feet between faces of abutments or spring lines of arches or extreme ends of the openings for multiple box culverts or multiple pipes that are 60 inches or more in diameter and that have a clear distance between openings of less than half of the smallest pipe diameter)	(i) Substructures and superstructures are free of: • undesirable vegetation • debris • blocked drains, weep pipes, manholes and chambers • blocked drainage holes in structural components • defects in joint sealants • defects in pedestrian protection measure • scour damage • corrosion of rebar • paint system failures • impact damage (ii) Expansion joints free of: • dirt, debris and vegetation • defects in drainage system • loose nuts and bolts • defects in gaskets and/or seals (iii) The deck drainage system is free of all debris and operates as intended. (iv) Parapets free of: • loose nuts and bolts • blockages of hollow section drain holes • undesirable vegetation • impact damage • concrete spalling	24 hours	28 days	6 months	(a) The National Bridge Inspection Standards (NBIS) of the Code of Federal Regulations, 23 Highways – Part 650 (b) The TxDOT Bridge Inspection Manual (c) The Federal Highway Administration's Bridge Inspector's Reference Manual (d) Visual Inspection	3.1.1	Performance objective is met and records maintained as required in the TxDOT Bridge Inspection Manual.	100%
			v) Bearings and bearing seats are: • properly aligned horizontally and vertically • clean and in full contact with each other (vi) Sliding and roller surfaces are clean and greased to ensure satisfactory performance. Additional advice contained in bearing manufacturers' instructions in the structure maintenance manual is followed. (vii) Special finishes are clean and perform to the appropriate standards. (viii) All non-structural items such as hoists and electrical fixings, operate correctly, are clean and lubricated as appropriate, in accordance with the manufacturer's recommendations and certification of lifting devices is maintained.					3.1.2	Condition rating equal to or greater than seven (7) for any deck, superstructure or substructure.	
	3.2	Non-bridge class culverts	Non-bridge class culverts are free of: • vegetation, debris and silt • defects in sealant at movement joints • scour damage • corrosion of rebar • impact damage	24 hours	28 days	28 days	Visual inspection	3.2.1	Performance objective met.	100%
	3.3	Not Used								

ELEMENT CATEGORY	REF	ELEMENT	PERFORMANCE OBJECTIVE	DEFECT REMEDY PERIOD			INSPECTION AND MEASUREMENT METHOD	REF	MEASUREMENT RECORD	TARGET
				Cat 1	Cat 1	Cat 2				
				Hazard Mitigation	Permanent Remedy	Permanent Repair				
	3.4	Gantries and high-masts	Sign signal gantries, high-masts are structurally sound and free of: • loose nuts and bolts • defects in surface protection systems	24 hours	28 days	6 months	Visual inspection	3.4.1	Performance objective met.	100%
	3.5	Access points	All hatches and points of access have fully operational and lockable entryways.	24 hours	28 days	6 months	Visual Inspection	3.5.1	Performance objective met.	100%
	3.6	Retaining walls	Retaining walls are free of: • undesirable vegetation • defects in sealed joints • defects in pedestrian protection • scour damage • corrosion of rebar • paint system failure • concrete spalling • impact damage • blocked weep holes Parapets are free of: • loose nuts and bolts • blockage of drain holes • undesirable vegetation • impact damage • concrete spalling	24 hours	28 days	28 days	Visual inspection	3.6.1	Performance objective met.	100%

ELEMENT CATEGORY	REF	ELEMENT	PERFORMANCE OBJECTIVE	DEFECT REMEDY PERIOD			INSPECTION AND MEASUREMENT METHOD	REF	MEASUREMENT RECORD	TARGET
				Cat 1	Cat 1	Cat 2				
				Hazard Mitigation	Permanent Remedy	Permanent Repair				
4) PAVEMENT MARKINGS, OBJECT MARKERS, BARRIER MARKERS AND DELINEATORS										
	4.1	Pavement markings	Pavement markings are: • clean and visible during the day and at night • whole and complete and of the correct color, type, width and length • placed to meet the TMUTCD and TxDOT's Pavement Marking Standard Sheets	24 hours	28 days	28 days	**a) Markings - General**			
							Visual inspection (to include a record of visibility of markings under low beam headlights.)	4.1.1	Performance Requirement met	100%
							b) Profile Markings			
							Visual inspection	4.1.2	Performance Requirement met	100%
	4.2	Raised reflective markers	Raised reflective pavement markers are: • clean and clearly visible • of the correct color and type • reflective or retroreflective in accordance with TxDOT standards • correctly located, aligned and at the correct level • are firmly fixed • are in a condition that will ensure that they remain at the correct level.	24 hours	28 days	6 months	Visual inspection	4.2.1	Performance Requirement met	100%
	4.3	Delineators & markers	Object markers and delineators are: • clean and visible • of the correct color and type • legible and reflective • straight and vertical	24 hours	28 days	28 days	Visual inspection	4.3.1	Performance Requirement met	100%
5) CURBS, GUARDRAILS, SAFETY BARRIERS AND IMPACT ATTENUATORS										
	5.1	Curbs	Curbs are free of separation and are in proper grade and alignment.	24 hours	28 days	28 days	Visual inspection	5.1.1	Performance Requirement met	100%
	5.2	Guardrails and safety barriers	All guardrails, safety barriers, and concrete barriers are maintained free of defects and are appropriately placed. New permanent guardrail and safety barriers are correctly installed at the correct height and distance from roadway or obstacles.	24 hours	28 days	28 days	Visual inspection	5.2.1	Performance Requirement met	100%
	5.3	Impact attenuators	All impact attenuators are appropriately placed, correctly installed, and free of damage.	24 hours	28 days	6 months	Visual inspection	5.3.1	Performance Requirement met	100%

ELEMENT CATEGORY	REF	ELEMENT	PERFORMANCE OBJECTIVE	DEFECT REMEDY PERIOD			INSPECTION AND MEASUREMENT METHOD	REF	MEASUREMENT RECORD	TARGET
				Cat 1	Cat 1	Cat 2				
				Hazard Mitigation	Permanent Remedy	Permanent Repair				
6) TRAFFIC SIGNS										
	6.1	General – All signs	(i) Signs are clean, correctly located, clearly visible, legible, reflective, at the correct height and free from structural and electrical defects (ii) Identification markers are provided, correctly located, visible, clean and legible (iii) Sign mounting posts are vertical, structurally sound and rust free (iv) All break-away sign mounts are clear of silt or other debris that could impede break-away features and shall have correct stub heights (v) Obsolete and redundant signs are removed or replaced as appropriate (vi) Visibility distances meet the stated requirements (vii) Sign information is of the correct size, location, type and wording to meet its intended purpose and any statutory requirements (viii) All structures and elements of the signing system are kept clean and free from debris and have clear access provided (ix) All replacement and repair materials and equipment are in accordance with the requirements of the TMUTCD	24 hours	28 days	28 days	Visual inspection	6.1.1	Performance Requirement met	100%
	6.2	Warning and regulatory signs	Requirements as 6.1, plus: Warning and regulatory signs are clean, legible and undamaged.	2 hours	24 hours	N/A	Visual inspection	6.2.1	Performance Requirement met	100%
7) TRAFFIC SIGNALS										
	7.1	General	(i) Traffic signals and their associated equipment shall be: • clean and visible • correctly aligned and operational • free from damage caused by accident or vandalism • bulbs are not burned out (ii) Signal timing and operation is correct (iv) Comply with National Electric Code regulations. (iii) Traffic signals are structurally sound. (v) Signals have identification markers and the telephone number for reporting faults are correctly located, clearly visible, clean and legible. (vi) Contingency plans are in place to rectify Category 1 Defects not immediately repairable to assure alternative traffic control is provided during a period of failure.	2 hours	24 hours	28 days	Visual inspection	7.1.1	Performance Requirement met	100%
	7.2	Pedestrian elements and vehicle detectors	All pedestrian elements and vehicle detectors are correctly positioned and fully functional.	24 hours	28 days	28 days	Visual inspection	7.2.1	Performance Requirement met	100%

ELEMENT CATEGORY	REF	ELEMENT	PERFORMANCE OBJECTIVE	DEFECT REMEDY PERIOD			INSPECTION AND MEASUREMENT METHOD	REF	MEASUREMENT RECORD	TARGET
				Cat 1	Cat 1	Cat 2				
				Hazard Mitigation	Permanent Remedy	Permanent Repair				
8) LIGHTING										
	8.1	Roadway lighting – General	i) All lighting is free from defects and provides acceptable uniform lighting quality ii) Lanterns are clean, clearly visible and correctly positioned iii) Lighting units are free from accidental damage or vandalism iv) Columns are upright, correctly founded, visually acceptable and structurally sound	24 hours	28 days	28 days	Night time inspection or automated logs	8.1.1	Performance Requirement met	100%
	8.2	Sign lighting	Sign lighting is fully operational.	24 hours	28 days	28 days	Night time inspection or automated logs	8.2.1	Performance Requirement met	100%
	8.3	Electrical supply	Electricity supply, feeder pillars, cabinets, switches and fittings are electrically, mechanically and structurally sound and functioning.	24 hours	7 days	28 days	Testing to meet National Electric Code regulations, visual inspection	8.4.1	Performance Requirement met	100%
	8.4	Access panels	All access panels in place and secure at all times.	24 hours	7 days	28 days	Visual Inspection	8.5.1	Performance Requirement met	100%
	8.5	High-mast lighting	(i) All high-mast luminaries functioning on each pole (ii) All obstruction lights are present and working (if required) (iii) Compartment door is secure with all bolts in place (iv) All winch and safety equipment are correctly functioning and maintained without rusting or corrosion (for structural requirements refer to Element Category 3)	24 hours	7 days	28 days	Night time inspections or automated logs	8.6.1	Performance Requirement met	100%
9) FENCES, WALLS AND SOUND ABATEMENT										
	9.1	General	Integrity and structural condition of fences, walls and/or sound abatement elements are maintained and are free of: • blocked weep holes • undesirable vegetation • defects in joint sealants • defects in pedestrian protection • scour damage • corrosion of rebar • paint system failure • concrete spalling • impact damage	24 hours	28 days	28 days	Visual inspection and structural assessment if visual inspection warrants	9.1.1	Performance Requirement met	100%

ELEMENT CATEGORY	REF	ELEMENT	PERFORMANCE OBJECTIVE	DEFECT REMEDY PERIOD			INSPECTION AND MEASUREMENT METHOD	REF	MEASUREMENT RECORD	TARGET
				Cat 1	Cat 1	Cat 2				
				Hazard Mitigation	Permanent Remedy	Permanent Repair				
10) ROADSIDE MANAGEMENT (comply with specified minimum condition)										
	10.1	Vegetated areas – Except landscaped areas – General	Vegetation is maintained so that: (i) Height of grass and weeds is kept within the limits described for rural or urban areas. Mowing begins before vegetation reaches the maximum height. (ii) Spot mowing at intersections, ramps or other areas maintains visibility of appurtenances and sight distance. (iii) Grass or vegetation does not encroach into or on paved shoulders, mainlanes, sidewalks, islands, riprap, traffic barrier or curbs. (iv) A herbicide program is undertaken in accordance with the TxDOT Roadside Vegetation Manual and the TxDOT Herbicide Operations Manual to control noxious weeds and to eliminate grass in pavement or concrete. (v) A full width mowing cycle is completed after the first frost (vi) Wildflowers are preserved utilizing the guidelines in the mowing specifications and TxDOT Roadside Vegetation Management Manual	24 hours	7 days	28 days	Physical measurement	10.1.1	Urban Areas - Individual measurement areas have 95% of height of grass and weeds between 5" and 18". Rural areas - Individual measurement areas have 95% of height of grass and weeds between 5" and 30".	100%
							Visual inspection	10.1.2	Other performance objectives met.	100%
	10.2	Landscaped areas	(i) All landscaped areas are maintained to their originally constructed condition. Landscaped areas are as designated in the Plans. (ii) Mowing, litter pickup, irrigation system maintenance and operation, plant maintenance, pruning, insect, disease and pest control, fertilization, mulching, bed maintenance, watering is undertaken as per Maintenance Management Plan. (iii) The height of grass and weeds is kept between 2" and 8". Mowing begins before vegetation reaches 8". (iv) Damaged or dead vegetation is replaced	24 hours	7 days	28 days	Visual inspection	10.2.1	Performance objective met.	100%
	10.3	Fire hazards	Fire hazards are controlled.	24 hours	7 days	28 days	Visual inspection	10.3.1	Performance objective met.	100%

ELEMENT CATEGORY	REF	ELEMENT	PERFORMANCE OBJECTIVE	DEFECT REMEDY PERIOD			INSPECTION AND MEASUREMENT METHOD	REF	MEASUREMENT RECORD	TARGET
				Cat 1	Cat 1	Cat 2				
				Hazard Mitigation	Permanent Remedy	Permanent Repair				
	10.4	Trees, brush and ornamentals	(i) Trees, brush and ornamentals on the right of way, except in established no mow areas, are trimmed in accordance with TxDOT standards. (ii) Trees, brush and ornamentals are trimmed to insure they do not interfere with vehicles or sight distance, or inhibit the visibility of signs. (iii) Dead trees, brush, ornamentals and branches are removed. Potentially dangerous trees or limbs are removed. (iv) All undesirable trees and vegetation are removed. Diseased trees or limbs are treated or removed by licensed contractors.	24 hours	7 days	28 days	Visual inspection	10.4.1	Performance objective met.	100%
	10.5	Wetlands	Wetlands are managed in accordance with the permit requirements	24 hours	7 days	28 days	Visual inspection and records of compliance	10.5.1	Performance objective met.	100%
	10.6	Sidewalks and pedestrian curb ramps	Compliance with TxDOT Design Standards and Americans with Disabilities Act (ADA) requirements and maintain at a standard to be free of defects as follows: (i) unsealed cracks or joints (ii) broken sections (iii) vertical displacement or misalignment	24 hours	7 days	28 days	Visual inspection	10.6.1	Performance objective met.	100%
11) REST AREAS AND PICNIC AREAS (NOT USED)										
12) EARTHWORKS, EMBANKMENTS AND CUTTINGS										
	12.1	Slope failure	All structural or natural failures of the embankment and cut slopes of the Project are repaired.	24 hours	28 days	6 months	Visual inspection	12.1.1	Performance objective met.	100%
	12.2	Slopes - General	Slopes are maintained in general conformance to the original graded cross-sections, the replacement of landscaping materials, reseeding and re-vegetation for erosion control purposes and removal and disposal of all eroded materials from the roadway and shoulders.	24 hours	28 days	6 months	Visual inspection	12.2.1	Performance objective met.	100%
	12.3	Slopes – Erosion	Slopes are maintained to prevent erosion leading to further deterioration.	24 hours	28 days	3 months	Visual inspection	12.3.1	No erosion greater than six inches deep.	100%
	12.4	Slopes - Permanent Erosion Control Measures	Where permanent erosion control measures such as rock or concrete riprap are utilized: no undermined or damaged erosion control measures and keep concrete slope protection joints sealed and free from vegetation.	24 hours	28 days	3 months	Visual inspection	12.4.1	Performance objective met.	100%

ELEMENT CATEGORY	REF	ELEMENT	PERFORMANCE OBJECTIVE	DEFECT REMEDY PERIOD			INSPECTION AND MEASUREMENT METHOD	REF	MEASUREMENT RECORD	TARGET
				Cat 1	Cat 1	Cat 2				
				Hazard Mitigation	Permanent Remedy	Permanent Repair				
13) ITS EQUIPMENT										
	13.1	ITS Equipment - Maintenance	All ITS equipment is fully functional and housing is functioning and free of defects. i) All equipment and cabinet identification numbers are visible, sites are well drained and access is clear. ii) Steps, handrails and accesses are kept in a good condition. iii) Access to all communication hubs, ground boxes, cabinets and sites is clear. iv) All drainage is operational and all external fixtures and fittings are in a satisfactory condition. v) All communications cable markers, cable joint markers and duct markers are visible and missing markers are replaced. vi) Backup power supply system is available at all times.	24 hours	14 days	28 days	Visual inspection and records of existing malfunctions	13.1.1	ITS equipment is fully functional and and Performance Requirement met.	100%
	13.2	Dynamic Message Sign Equipment	Dynamic Message Signs are free from faults such as: i) Any signal displaying a message which is deemed to be a safety hazard. ii) Failure of system to clear sign settings when appropriate. iii) 2 or more contiguous sign failures that prevent control office setting strategic diversions. iv) Signs displaying an incorrect message.	2 hours	24 hours	14 days	Visual inspection and records of existing malfunctions	13.2.1	Dynamic message sign is fully functional and Performance Requirement met.	100%
	13.3	CCTV Equipment	CCTV Systems are free from serious faults that significantly limit the availability of the operators to monitor the area network, such as: i) Failure of CCTV Systems to provide control offices with access and control of CCTV images. ii) Failure of a CCTV camera or its video transmission system. iii) Failure of a Pan / Tilt unit or its control system. iv) Moisture ingress onto CCTV camera lens. v) Faults that result in significant degradation of CCTV images.	2 hours	24 hours	14 days	Visual inspection and records of existing malfunctions	13.3.1	CCTV system is fully functional and Performance Requirement met	100%
	13.4	Vehicle Detection Equipment	All equipment free of defects and operational problems such as: i) Inoperable loops ii) Malfunctioning camera controllers	2 hours	24 hours	28 days	Visual inspection and records of existing malfunctions	13.4.1	Vehicle detection equipment is fully functional and Performance Requirement met	100%
14) TOLLING FACITLITIES AND BUILDINGS (NOT USED)										

ELEMENT CATEGORY	REF	ELEMENT	PERFORMANCE OBJECTIVE	DEFECT REMEDY PERIOD			INSPECTION AND MEASUREMENT METHOD	REF	MEASUREMENT RECORD	TARGET
				Cat 1	Cat 1	Cat 2				
				Hazard Mitigation	Permanent Remedy	Permanent Repair				
15) AMENITY										
	15.1	Graffiti	Graffiti is removed in a manner and using materials that restore the surface to a like appearance similar to adjoining surfaces (i) Category 1 Defect – Obscene, apparent gang-related, or highly visible graffiti (ii) Category 2 Defect – Graffiti other than Category 1 Defect	4 hours	4 hours	1 week	Visual inspection	15.1.1	Graffiti is not present	100%
	15.2	Animals	All dead or injured animals are removed	2 hours	N/A	N/A	Visual inspection	15.2.1	Dead or injured animals are not present.	100%
	15.3	Abandoned vehicles and equipment	All abandoned vehicles and equipment are removed	1 hour	3 days	N/A	Visual inspection	15.3.1	Abandoned vehicles or equipment are not present.	100%
16) SNOW AND ICE CONTROL										
	16.1	Travel lanes	Pretreat travel way with brine solution prior to potential snow and ice event	12 hours	N/A	N/A	Visual inpsection	16.1.1	Pretreat travel way with brine solution a minimum 12 hours but no more than 24 hours prior to potential snow and ice event.	100%
			Maintain travel way free from snow and ice	2 hours	N/A	N/A	Records of all snow and ice controls	16.1.2	Response times are met for all snow and ice controls: (i) Maximum 1 hr response time to complete manning and loading of spreading vehicles (ii) Maximum 2 hrs from departure from loading point to complete treatment and return to loading point (iii) Maximum 1 hr response time for snow and ice clearance vehicles to depart from base	100%
17) INCIDENT RESPONSE										
	17.1	General	(i) Monitor the Project and respond to Incidents in accordance with the Maintenance Management Plan (MMP). (ii) Monitor the Project and respond to Incidents involving Hazardous Materials in accordance with the Maintenance Management Plan. (iii) Evaluate structural damage to structures and liaise with emergency services to ensure safe working environment while clearing the Incident.	1 hour	N/A	N/A	Records of all incident and emergency responses	17.1.1	Response times are met for 98% of Incidents measured on a 1 year rolling basis and no complaints from Emergency Services.	100%
	17.2	Temporary and permanent remedy	(i) Propose and implement temporary measures or permanent remedies to Defects arising from the Incident. Iii) Ensure the structural safety of any structures affected by the Incident.	24 hours	28 days	N/A	Review and inspection of the Incident site	17.2.1	Performance objective met.	100%
18) SWEEPING AND CLEANING										
	18.1	Obstructions and debris	Roadway and clear zone free from obstructions and debris including at a minimum objects, luminaire poles, and tires.	2 hours	N/A	N/A	Visual Inspection	19.1.1	No obstructions and debris on roadway and clear zone.	100%

ELEMENT CATEGORY	REF	ELEMENT	PERFORMANCE OBJECTIVE	DEFECT REMEDY PERIOD			INSPECTION AND MEASUREMENT METHOD	REF	MEASUREMENT RECORD	TARGET
				Cat 1	Cat 1	Cat 2				
				Hazard Mitigation	Permanent Remedy	Permanent Repair				
	18.2	Sweeping	i) Keep all channels, hard shoulders, gore areas, ramps, intersections, islands and frontage roads swept clean ii) Clear and remove debris from traffic lanes, hard shoulders, verges and central reservations, footways and cycle ways iii) Remove all sweepings without stockpiling in the right of way and dispose of at approved tip.	24 hours	3 days	N/A	Visual Inspection	19.2.1	No buildup of dirt, ice, rock, debris, etc. on roadways and bridges to accumulate greater than 18" wide or 1/2" deep.	100%
	18.3	Litter	i) Keep the right of way in a neat condition, remove litter regularly. ii) Pick up large litter items before mowing operations. Iii) Dispose of all litter and debris collected at an approved solid waste site.	24 hours	3 days	N/A	Visual Inspection	19.3.1	No more than 30 pieces of litter (rural) and 50 pieces of litter (urban) per roadside mile shall be visible when traveling at highway speed.	100%

NOTES FOR PERFORMANCE AND MEASUREMENT TABLE DURING CONSTRUCTION

1. “Cat 1 Hazard Mitigation” shall be an action taken by DB Contractor to mitigate a hazard to Users or imminent risk of damage or deterioration to property or the environment.

2. “Cat 1 Permanent Remedy” shall be an action taken by DB Contractor to restore the condition of an Maintenance Element following “Cat 1 Hazard Mitigation” of a Category 1 Defect: (a) to the standard required for new construction; or (b) to a condition such that the Target is achieved for each “Measurement Record”.

3. “Cat 2 Permanent Repair” shall be an action taken by DB Contractor to restore the condition of an Maintenance Element for which a Category 2 Defect has been recorded: (a) to the standard required for new construction; or (b) to a condition such that the Target is achieved for each “Measurement Record”.

Texas Department of Transportation

DESIGN-BUILD SPECIFICATIONS

Items 10-30

Attachment 27-2

Maintenance Limits

November 9, 2018

LBJ EAST DESIGN BUILD – MAINTENANCE LIMITS

"Through collaboration and leadership, we deliver a safe, reliable, and integrated transportation system that enables the movement of people and goods."

DALLAS DISTRICT

0977_071918

SOURCE: Texas Department of Transportation.

TxDOT graphic

Texas Department of Transportation

DESIGN-BUILD SPECIFICATIONS

Items 10-30

Attachment 27-3

Maintenance Management Plan

November 9, 2018

Maintenance Management Plan

NAME OF PROJECT
Contract #XXXXX

Day Month Year

Prepared By: DB Contractor's Name
Street Address
Suite XXX
City Name, Texas XXXX

MAINTENANCE MANAGEMENT PLAN

For The

NAME OF PROJECT

Approved By:

_____ _____

First Name Last Name
Maintenance Manager (MM) **Date**

_____ _____

First Name Last Name
Maintenance Quality Manager (MQCM) **Date**

_____ _____

First Name Last Name
TxDOT's Authorized Representative **Date**

Record of Revisions

Rev.	Date Issued	Pages Affected	Comments
0	XX/XX/XXXX	All	Initial Issue
1	XX/XX/XXXX	XX-XX	Add brief comment regarding revision

Instructions to DB Contractor:

(These instructions to be removed from completed MMP)

1. This Maintenance Management Plan (MMP) template defines the structure and required contents of the MMP. Use this template for each version and revision of the MMP submitted to TxDOT for approval.
2. Include the DB Contractor's processes to achieve compliance with the obligations in the Contract Documents including the Performance Requirements. Describe who is responsible for each activity.
3. Processes should be clear, auditable, measurable, and achievable. Include control points at which the DB Contractor causes its own personnel or independent parties to verify that the work is in compliance with the contract. Identify points in the processes at which TxDOT is given the opportunity to witness or approve the work.
4. Identify the procedures (i.e. detailed steps) that will be utilized (see Appendix 13 for a listing of procedures that are needed at a minimum).
5. The MMP shall apply to Maintenance Work before Final Acceptance and an updated version of this plan shall apply if TxDOT instructs a Capital Maintenance Agreement (CMA).
6. Describe the MMP updating process so that TxDOT knows who will be performing what actions when.
7. The MMP is part of the Project Management Plan (PMP). Section 5.2.1 of the DBA General Conditions sets forth TxDOT's approval rights and the conditions attached to its approval of the PMP.
8. Do not duplicate the DB Specifications within the MMP. Where necessary, cross reference relevant parts of the DB Specifications.
9. Include within the MMP all Proposal Commitments and how TxDOT will be able to verify the Proposal Commitments have been fulfilled.
10. Ensure the MMP is consistent with the Preliminary MMP included with the Proposal.
11. Instructions to the DB Contractor are shown in this template in parentheses and italics and shall be removed prior to submittal of the MMP to TxDOT.
12. Include within the MMP a Project-specific timeline showing contract milestones, MMP and PMP versions and updates and MMP submittal milestones.
13. Include references to all policies from the QMP applicable to Maintenance Work.

TABLE OF CONTENTS

1. GENERAL MANAGEMENT AND ADMINISTRATION 1

1.1 Organization and Personnel 1

1.1.1 DB Contractor Maintenance Organization Chart 1

1.1.2 Qualifications, Experience necessary and training requirements for DB Contractor staff positions 2

1.1.3 Personnel Training and Certification 2

1.2 Communication Protocols 3

1.2.1 Communications with TxDOT and other Governmental Entities 3

1.2.1.1 Coordination during ITS integration and ITS operations 4

1.2.1.2 Oversize / Overweight Permits 4

1.2.2 Coordination with Utilities, Stakeholders and other 3rd Parties 4

1.2.3 Internal Communications 5

1.2.4 Public Information and Communications 5

1.3 Project Meetings 5

1.4 Document Control and Information Management 5

1.5 Procurement and Subcontractors 6

1.6 Offices and Equipment 6

2. EMERGENCY RESPONSE 7

2.1 Incident and Emergency Management Plan 7

2.2 Snow and Ice Control Plan 9

2.3 Severe Weather Evacuation Plan 9

3. ENVIRONMENTAL COMPLIANCE 10

3.1 Governmental Approvals and Permits 10

3.2 Hazardous Material Management Plan 10

3.3 SW3P Implementation 11

3.4 Spill Prevention and Countermeasures Plan 11

3.5 Pollution Prevention Plan (P2), Recycling Plan, and Waste Management 11

3.6 Truck Routes, Hazardous Material Routes and related Approvals 11

3.7 Environmental Compliance and Mitigation Plan 11

4. MAINTENANCE STANDARDS AND MAINTENANCE LIMITS 12

4.1 Maintenance Limits, Layout and Limits of Performance Sections 12

5. COMPLIANCE WITH PERFORMANCE REQUIREMENTS 12
5.1 Performance and Measurement Tables 12
5.2 Maintenance Management System (MMS) 12
5.2.1 Software 12
5.2.2 Software Updates and Compatibility with TxDOT's MMS 13
5.2.3 Documentation and Forms 13
5.3 Defects and Inspections 13
6. MAINTENANCE SAFETY PLAN 14
7. TRAFFIC MANAGEMENT PLAN 14
7.1 Descriptions, Qualifications, Duties and Responsibilities of Traffic Personnel 14
7.2 Processes for Lane Closures and Traffic Control Plans 15
7.3 Public Information and Communications Plan 15
APPENDIX 1: STAFF REQUIREMENTS TABLE 16
APPENDIX 2: STAFF NAMES CONTACT DETAILS AND QUALIFICATIONS 16
APPENDIX 3: CONTACT DETAILS FOR TXDOT AND THIRD PARTIES 16
APPENDIX 4: PERMITS FOR GOVERNMENT AGENCIES AND THIRD PARTIES 17
APPENDIX 5: [NOT USED] 17
APPENDIX 6: MAINTENANCE LIMITS AND LIMITS OF PERFORMANCE SECTIONS 17
APPENDIX 7: [NOT USED] 17
APPENDIX 8: [NOT USED] 17
APPENDIX 9: PERFORMANCE AND MEASUREMENT TABLES 17
APPENDIX 10: MAINTENANCE FACILITY LOCATION 17
APPENDIX 11: [NOT USED] 18
APPENDIX 12: MAINTENANCE MANAGEMENT SYSTEM DETAILS 18
APPENDIX 13: MMP PROCEDURES 19
APPENDIX 14: TEMPLATE FOR TYPICAL PROCEDURE 20
APPENDIX 15: FORMS FOR MAINTENANCE PROCEDURES 22
APPENDIX 16: QUALITY POLICIES AND PROCEDURES 22

1. GENERAL MANAGEMENT AND ADMINISTRATION

1.1 Organization and Personnel

1.1.1 DB Contractor Maintenance Organization Chart

Figure 1.1 below shows the organization chart for Maintenance Work before Final Acceptance.

[Describe the organizational structure and how it will enable the DB Contractor's obligations for Maintenance Work to be met. Describe the reporting lines to TxDOT and internally. Describe the roles and responsibilities assigned to each position. Identify Major Subcontractors and describe the Maintenance Work to be performed by them.

Figure 1.1: Organization Chart for Maintenance Work before Final Acceptance

[Insert organization chart showing reporting lines to include at a minimum:

- *TxDOT Project Manager*
- *DB Contractor corporate management team*
- *DB Contractor Project Manager**
- *Maintenance Manager**
- *Maintenance Quality Manager**
- *Maintenance Safety Manager**
- *Individual responsible for customer service**
- *Individual responsible for training program**
- *Individual responsible for ensuring maintenance and life cycle issues are captured in the design with link to design and construction teams**
- *Field crews responsible for Routine Maintenance*
- *Field crews responsible for patrols, inspections, defect identification, categorization and remedy*
- *Field crews responsible for Incident and Emergency Management*

For each individual (*) identify the employing organization. Show positions and activities to be undertaken by Major Subcontractors.]

Appendix 1 shows every staff position delivering Maintenance Work in connection with the Project together with the TxDOT employee counterpart(s) with whom each staff member will regularly interact.

[Include at a minimum the individuals marked with (*) on Figures 1.1 and 1.2, including individuals employed by subcontractors]

1.1.2 Qualifications, Experience necessary and training requirements for DB Contractor staff positions

Appendix 2 shows the individual(s) assigned to staff positions with their positions, contact information (email and mobile phone number), education/qualifications, role, and summary of previous experience.

[Include at a minimum the individuals required to be identified on the organization chart, including individuals employed by subcontractors]

1.1.3 Personnel Training and Certification

Table 1.1 defines responsibility for development and implementation of training programs, who will be conducting the training and certification process for each staff position, including maintenance personnel, subcontractors and maintenance crew members on the topics below.

Forms documenting evidence of attendance and frequency/schedule of training updates to be attended by all relevant staff are shown in Appendix 15.

Table 1.1: Training Program Matrix

Training Program	Person responsible to develop and deliver	Staff positions requiring training	Frequency of training	Link to training program
Maintenance Management Plan training				
Inspections, Defect identification and categorization of Defects				
Hazardous materials, Response and mitigation of incidents involving contamination or waste, OSHA 1910.120 (HAZWOPER Training)				
Maintenance Safety Plan, equipment use, all safety-related activities and enforcement of safety operations				
CPR and first aid				
Work zone traffic control and flaggers in work zones				
Environmental impacts associated with Maintenance Work				
Operating railroad requirements prior to performing Maintenance Work or other activities affecting railroad property				
[Other training programs (details to be added by DB Contractor)]				

[Include at a minimum training requirements for the individuals required to be identified on the organization chart, including individuals employed by subcontractors]

1.2 Communication Protocols

[Insert the required information below and refer to appropriate chapter and section from the PMP for all sub-sections of 1.2 (1.2.1 – 1.2.4).]

1.2.1 Communications with TxDOT and other Governmental Entities

Refer to the following procedures in Appendix 13:

- MMP-001 –Submittals and Coordination with TxDOT, Other Agencies and Third Parties

For processes on meetings, reporting, written updates and immediate notifications on priority issues refer to *[Chapter X, Section X]* of the PMP.
Contact details for TxDOT, Government Entities, third parties, other stakeholders and their consultant offices with whom the DB Contractor will communicate are listed in Appendix 3.

[Within MMP-001 identify all adjacent highway agencies and address all interfaces with adjacent and connecting roadways.]

1.2.1.1 Coordination during ITS integration and ITS operations

For ITS integration before Final Acceptance refer to *[Chapter X, Section X]* of the PMP.

The following are maintenance interfaces with ETCS:

[List the points of interfaces and include reference to diagrams or drawings showing interface lines and demarcations of responsibility for each tolling zone. Include updates consistent with progress of design].

The contact details for the Toll Services Integrator are as follows:

[List the contact details here]

1.2.1.2 Oversize / Overweight Permits

The process for requests for permitting, issuance of permits and enforcement of permits through TxDOT is included in the following procedure in Appendix 13:

- MMP-002 –Agency Coordination for Oversize Loads

[State how TxDMV will be notified of closures associated with permits and how updates for roadway clearances during construction will be provided.]

1.2.2 Coordination with Utilities, Stakeholders and other 3rd Parties

Refer to the following procedures in Appendix 13:

- MMP-001 –Submittals and Coordination with TxDOT, Other Agencies and Third Parties

Table 1.2 below shows:

- Utilities, stakeholders and other third parties;
- In-house staff and specialized resources from the maintenance team responsible for coordination (including development and compliance with processes and the production of documentation) for each utility, stakeholder and other 3rd Party; and
- Reference to procedures contained in Appendix 13 specific to each named entity.

Table 1.2: Coordination with Governmental Entities, Stakeholders, Utilities, and Third Parties

Entity, Utility, stakeholder or third party	DB Contractor Personnel responsible for coordination	Reference to Procedure (specific to the named entity)

[Insert Governmental Entity, utility and stakeholder or third party coordination responsibilities and processes for Maintenance Work before Final Acceptance. Include reference to individual procedures applicable to each entity, covering the following:

- *Notification to entity of upcoming Maintenance Services that may affect the entity's operations, e.g. Maintenance Services affecting adjacent business of utility interest*
- *Application by entity for access to inspect, repair, renew or replace its equipment within the Maintenance Limits]*

1.2.3 Internal Communications

For internal communications processes and responsible personnel before Final Acceptance, refer to *[Chapter X, Section X]* of the PMP.

For internal communications processes and responsible personnel after Final Acceptance, refer to

- MMP-001 –Submittals and Coordination with TxDOT, Other Agencies and Third Parties

1.2.4 Public Information and Communications

Refer to Section 7.3

1.3 Project Meetings

[Refer to appropriate chapter and section from the PMP for meetings in connection with Maintenance Work.]

The meeting types, topics, required participants and frequencies of meetings in connection with Maintenance Work shall be in accordance with Table 1.6.

Table 1.6 Meetings In Connection with Maintenance Work

Meeting Type	Frequency	Attendees
Monthly Maintenance Work review meeting	Monthly	TxDOT, Maintenance Manager, other senior personnel

[Insert details of all other meetings in connection with the Maintenance Work including mandatory meetings required by TxDOT.]

1.4 Document Control and Information Management

[Refer to appropriate chapter and section from the PMP for document control and information management in connection with Maintenance Work.]

Document Control and information management for Maintenance Work shall be as identified in Table 1.7.

Table 1.7: Document Control and Information Management

Person responsible for compliance with TxDOT Maintenance and Inspection of Records requirements	*[Insert name of individual or staff position]*
Procedures applicable	*[Insert references to applicable procedures]*
Document management EDMS software system	*[Insert details of software and reference to manuals]*
Person responsible for the storage and retention of Maintenance Records	*[Insert name of individual or staff position]*
[Insert other requirements applicable to document control and information management]	

1.5 Procurement and Subcontractors

Maintenance Work activities that will be subcontracted are shown in Table 1.8 below.

Table 1.8: Details of Subcontractors Performing Maintenance Work

Name of Subcontractor and start date	Key contact details	Work responsibility

[Add details of each subcontractor within the time periods permitted in the DBA.]

1.6 Offices and Equipment

Refer to the following procedure in Appendix 13:

- MMP-004 – Maintenance of Facilities, Vehicles and Equipment Plan

The physical location and layout of the Maintenance Facility is shown in Appendix 10.

[Provide location and map (if different than the Roadway Maintenance office) of the maintenance facility for equipment maintenance and storage and for the de-icing material storage, if applicable.]

[Provide spare parts, special tools and equipment list including an auditable parts and spares inventory adequate to address the maintenance obligations and compatible with the Maintenance Management System and a list of vendors for equipment and maintenance services.]

[Provide current versions and procedures, functionality, software maintenance requirements and access protocols for all specialist software employed by DB Contractor in connection with the Maintenance Services.]

The physical address is *[insert address]*

The 24-hour contact number is *[insert number].*

2. EMERGENCY RESPONSE

2.1 Incident and Emergency Management Plan

The Incident and Emergency Management Plan (IEMP) contains the approach to Incident or Emergency management consistent with *Section 27.4.1 of the DB Specifications*, training requirements and staffing requirements for response to Incidents and Emergencies, and includes protocols, processes, and guidelines to mitigate the impacts, respond to and recover from all such events. The IEMP has been prepared in coordination with and including input from the following organizations:

[Insert Project-specific list of consultees, dates of consultation and evidence of actively seeking input and feedback, to include TxDOT, Emergency Services, owners of Related Transportation Facilities and applicable Governmental Entities.]

The command structure for Incident Management is shown in Figure 2.1.

Figure 2.1: Command Structure for Incident Management

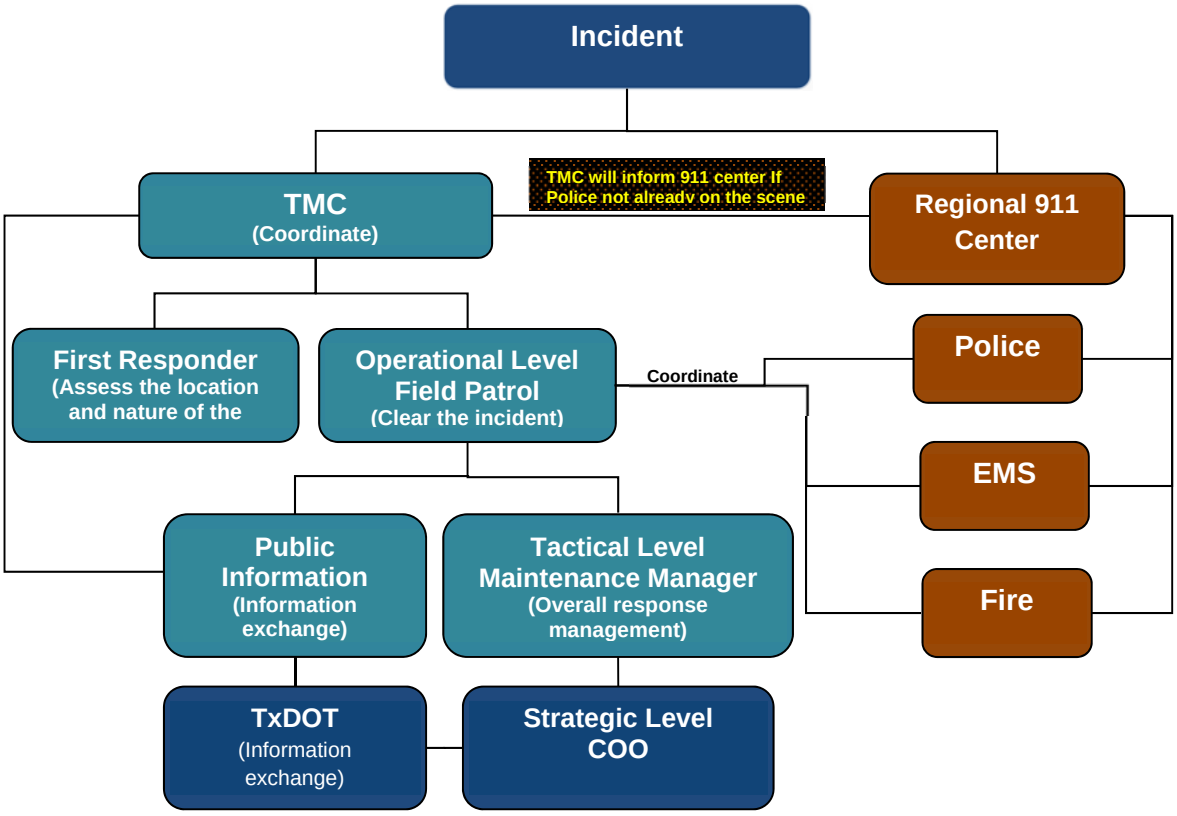

[Replace example Command Structure by Project-specific chart of equivalent detail that includes Project-specific details of Emergency Services and TxDOT contacts]

The following procedures in Appendix 13 are part of the IEMP:

- MMP-005 –Emergency and Incident Management.
- MMP-006 – Incident Damage Reports, Third Party Claims and Repairs
- MMP-007 – Complaint Review and Response
- MMP-008 – Customer Satisfaction Data Collection System

[Include within the IEMP, processes and responsibilities for:

(i) Identification of Incidents of differing categories (minor, major, critical) and notification of Emergency Services providers

(ii) Rapid and reliable establishment of traffic control for Incident management

(iii) Removal by towing and recovery of stalled, broken down, wrecked or otherwise incapacitated vehicles from the travel lane, including coordination with Emergency Services/law enforcement

(iv) Clearance of Incident and return affected lanes to normal use within the specified period of arriving at the Incident site

(v) Cleanup of debris, oil, broken glass and other such objects foreign to the roadway surface

(v) Notification of the public of traffic issues related to Incidents

(vi) Seeking feedback from TxDOT, emergency services and law enforcement and improving processes to improve response times.

(vii) *contact methods, personnel available, and response times for any Emergency condition requiring attention during off-hours*

(viii) identification and containment of all Hazardous Material spills and appropriate disposal of such materials.]

2.2 Snow and Ice Control Plan

The Snow and Ice Control Plan (SICP) contains operational processes for performing snow and ice control work. The SICP complies with all applicable Law, codes, and regulations governing the operation of equipment on public highways. The SICP will be updated at least annually to incorporate any changes in strategy and equipment levels designed to rectify any non-compliances in snow and ice removal operations during the preceding winter season.

The following procedure contained in Appendix 13 is part of the Snow and Ice Control Plan (SICP).

- MMP-009 – Snow and Ice Control / Clean-up Plan.

[Include within the SICP processes and responsibilities for:

(i) Receiving weather forecasts and making decisions for snow and ice control and pretreatment based upon analysis of data received

(ii) Advance preparation and call-out

(iii) Training in connection with snow and ice control

(iv) Record keeping/ reporting including maintaining records of compliance with the Performance Requirements

(v) Environmental management and processes for using preventative measures, involving use of anti-icing and de-icing chemicals such as salt and alternative substances, including storage and application

(vi) A list of the equipment and materials available for snow and ice control including its current location and methods to guarantee its availability for use.]

2.3 Severe Weather Evacuation Plan

The Severe Weather Evacuation Plan (SWEP) contains operational processes for evacuation. The SWEP complies with all applicable Law, codes, and regulations governing the operation of

equipment on public highways. The SWEP will be updated at least annually to incorporate any changes in strategy and evacuation routes during the previous year.

The following procedure in Appendix 13 is part of the SWEP:

- MMP-010 – Severe Weather Evacuation Plan.

[Include within the SWEP a process and the individual responsible for each of the following:

(i) Receiving weather forecasts and making decisions for evacuation based upon analysis of data received

(ii) Advance preparation and call-out

(iii) Training in connection with evacuation processes

(iv) Record keeping / reporting including maintaining records of compliance with the Performance Requirements

(v) Develop evacuations zones and evacuation guides with routes.]

3. ENVIRONMENTAL COMPLIANCE

3.1 Governmental Approvals and Permits

The required permits for government agencies and third parties as part of the Maintenance Work are included in Appendix 4.

3.2 Hazardous Material Management Plan

The Hazardous Materials Management Plan (HMMP) governs the safe handling, storage, treatment and/or disposal of Hazardous Materials, whether encountered at or brought onto the Project by the DB Contractor, encountered or brought onto the Project by a third party, or otherwise.
The following designated individuals are responsible for management of Hazardous Materials, including development of processes compliant with all applicable Environmental Laws:

[Include names, contact details and applicable certifications and licenses of designated individuals]

The following designated individual is responsible to ensure that:

- All personnel delivering the Maintenance Work who may be expected to handle Hazardous Materials have been trained and certified at least to the minimum requirements established under the guidelines of OSHA 1910.120 (HAZWOPER Training)
- All applicable certifications, licenses, authorizations and Governmental Approvals for DB Contractor personnel handling Hazardous Materials are current and valid.

[Include name, contact details and applicable certifications and licenses of designated individual]

The following procedure in Appendix 13 is part of the HMPP.

- MMP-011 – Hazardous Material Management Plan.

The HMPP is at *[Chapter X, Section X]* of the PMP.

3.3 SW3P Implementation

Maintenance Work will be undertaken in compliance with the TCEQ Texas Pollutant Discharge Elimination System (TPDES) Construction General Permit in accordance with the TxDOT Storm Water Management and Guidelines for Construction Activities Manual.

Refer to the following procedure in Appendix 13:

- MMP-012 Implementation of SW3P After Final Acceptance

The SW3P is at *[Chapter X, Section X]* of the PMP.

3.4 Spill Prevention and Countermeasures Plan

The following procedure is part of the Spill Prevention and Countermeasures Plan:

- MMP-013: Implementation of Spill Prevention and Countermeasures Plan

The Spill Prevention and Countermeasures Plan (SPCP) is at *[Chapter X, Section X]* of the PMP.

3.5 Pollution Prevention Plan (P2), Recycling Plan, and Waste Management

The Pollution Prevention (P2) Plan is prepared in accordance with the Texas Waste Reduction Policy Act. Refer to the following procedures in Appendix 13:

- MMP-014 Implementation of Pollution Prevention Plan
- MMP-015 Implementation of Waste Management
- MMP-016 Implementation of Recycling Plan

The Pollution Prevention Plan is at *[Chapter X, Section X]* of the PMP.

3.6 Truck Routes, Hazardous Material Routes and related Approvals

Truck Routes, Haz-Mat Routes and associated approvals are at *[Chapter X, Section X]* of the PMP.

3.7 Environmental Compliance and Mitigation Plan

Refer to the following procedures in Appendix 13:

- MMP-017 – Implementation of Environmental Procedures and Training
- MMP-018 – Mitigation Procedures for Impacts to Neighboring Facilities

The Environmental Compliance and Mitigation Plan (ECMP) includes compliance strategies and processes to be employed in accordance with the requirements of applicable Environmental

Laws and Environmental Approvals. Maintenance Work will be undertaken in compliance with the ECMP and the Environmental Commitments.

Refer to section 1.1.3 for education and training requirements for all project personnel. The ECMP is at *[Chapter X, Section X]* of the PMP.

[Include processes and responsibilities for:

(i) Conveying a commitment to the Project's environmental quality to all employees;

(ii) Conveying a commitment to zero tolerance for violations; and

(iii) Ensuring that environmental requirements are reflected in maintenance processes.]

4. MAINTENANCE STANDARDS AND MAINTENANCE LIMITS

4.1 Maintenance Limits, Layout and Limits of Performance Sections

Schematic Drawings showing the Maintenance Limits and the extents of the Performance Sections are included in Appendix 6, consistent with the requirements of *Section 27.1 of the DB Specifications*.

[Include processes and responsibilities for:

(i) Periodically validating that the Maintenance Limits are correctly and clearly identified in the field

(ii) Liaison with TxDOT and Governmental Entities at least annually to review the Maintenance Limits, identify any jurisdictional gaps or inefficiencies and recommend solutions]

5. COMPLIANCE WITH PERFORMANCE REQUIREMENTS

5.1 Performance and Measurement Tables

Appendix 9 to the MMP contains the most recent approved versions of the Performance and Measurement Tables.

5.2 Maintenance Management System (MMS)

Refer to the following procedure in Appendix 13:

- MMP-020 – Establishing Maintenance Management System

5.2.1 Software

The software for the MMS is *[Insert the name of the software]*. The individual responsible for maintaining the system and ensuring required access for TxDOT is *[Insert name of individual]*

Appendix 12 includes a link to the MMS software user guide including:

- Customization undertaken in connection with the Project
- Sample reports of the MMS software that provides evidence of compliance.
- Links to MMS training including a record of the most recent MMS demonstration provided to TxDOT.

5.2.2 Software Updates and Compatibility with TxDOT's MMS

Version *[..]* of the software will be initially used. Software updates will be noted under this section and update details will be available at the software's manual in Appendix 12. The MMS software is fully compatible with TxDOT's MMS as demonstrated at the software's manual (pages *[..]*) and at the data transferability process and reports that can be found in Appendix 12.

5.2.3 Documentation and Forms

Documentation and Forms needed to verify and enter the field gathered data to the MMS software can be found in Appendix 12.

5.3 Defects and Inspections

Refer to the following procedures in Appendix 13:

- MMP-021 – Defect Categorization and Repair
- MMP-022 – Maintenance Inspection Plan
- MMP-023 – Maintenance Repair Submittal Plan

[Include within the above processes and responsibilities for:

(i) Training of responsible personnel to identify and to categorize Defects discovered during inspection. This shall include training specific to the identification and recording of Category 1 Defects.

(ii) Tracking and reporting of Defects including fault detection logs, software output

(iii) Generation of corrective action work orders through the MMS including how backlog of corrective maintenance and repair activities will be populated and monitored in the MMS

(iv) Action by Defect category type, to include a description of how the actions are carried out stating the responsible individuals and the processes for specific Defect types with examples

(v) How Defects will be remedied, with examples provided for all common Defects, stating necessary notification and the individuals to be notified for such Defect remedy.

(vi) Documentation including how Defects will be entered, updated and closed in the Maintenance Management System.

(vii) Verification of the satisfactory completion of Maintenance Services and restoration of asset condition

(viii) Discovery of maintenance trends to determine the need for adjustments in the weekly, monthly and annual maintenance plan to address changing project conditions

(ix) Inspection and testing of Project items and the identification and classification of Defects and inspection failures.

(x) Monitoring instrumentation according to applicable specification

(xi) Field inspections of completed Maintenance Services and for preparing daily reports to document all inspections performed

(xii) Identification of inspection agencies and organizations, including information on each agency's capability to provide the specific services required, certifications held, and equipment

(xiii) Preparation and submittal of the Baseline Element Condition Report (BECR)

(xiv) Hazard mitigation for any Category 1 Defect in a Maintained Element of which the DB Contractor is aware through its own inspections, from a third party or through notification by TxDOT

(xv) Proposal to TxDOT of a repair method for any Defect]

6. MAINTENANCE SAFETY PLAN

Refer to the following procedure in Appendix 13:

- MMP-026 – Implementation of Safety Plan

The Maintenance Safety Plan describes the DB Contractor's policies, plans, training programs, and work site controls to ensure the health and safety of personnel involved in the Project and the general public affected by the Project during the Maintenance Period. The Maintenance Safety Plan is designed to preserve the safety of Users, adjacent communities, transportation workers and Emergency Services. Coordination with applicable Traffic Management Centers (TMCs) will occur as described in section 1.2 of the MMP.

7. TRAFFIC MANAGEMENT PLAN

Refer to the following procedure in Appendix 13:

- MMP-027 –Traffic Collection and Reporting

7.1 Descriptions, Qualifications, Duties and Responsibilities of Traffic Personnel

The qualifications and duties of the traffic engineering manager, traffic control coordinator, traffic safety officer, and other personnel with traffic control responsibilities are shown in Table 7.1.

Table 7.1: Qualifications and Duties of Traffic Personnel for Maintenance Work

Traffic Personnel Title	Required Qualifications	Description of Duties

Refer to Chapter 1 of the MMP for Personnel Training and Certification of patrol staff in health and safety, traffic control, incident management, and identification of Defects.

7.2 Processes for Lane Closures and Traffic Control Plans

The Traffic Management Plan is at *[Chapter X, Section X]* of the PMP.

Refer to the following procedure in Appendix 13:

- MMP-028 – Lane Closures and Traffic Control

7.3 Public Information and Communications Plan

Refer to the following procedure in Appendix 13:

- MMP-029 – Implementation of Public Information and Communications Plan

The Public Information and Communications Plan is in *[Chapter X, Section X]* of the PMP.

APPENDIX 1: STAFF REQUIREMENTS TABLE

[Insert personnel details for Maintenance Work]

Key personnel or other personnel position	Number of employees in category	Dates required in connection with Project	% of time to be allocated to Project	Corresponding TxDOT person

APPENDIX 2: STAFF NAMES CONTACT DETAILS AND QUALIFICATIONS

[Insert contact details, qualifications and training record for Maintenance Work]

Key Personnel or other personnel position	Staff name and start date	Contact details	Education, qualifications and experience	Link to training record in connection with Project
			[Insert details or link to resume]	

APPENDIX 3: CONTACT DETAILS FOR TXDOT AND THIRD PARTIES

[Insert contact details for Maintenance Work]

Organization	Contact name, e-mail and address	Business Phone
TxDOT *[List all TxDOT contacts in connection with Project]*		
Governmental Entities *[list all Governmental Entities]*		
Traffic Management Centers (TMC)		
Utilities *[list all utilities]*		
[Other third parties]		

APPENDIX 4: PERMITS FOR GOVERNMENT AGENCIES AND THIRD PARTIES

Permit Name	Agency/Reason for Permit	Description of Permit	Date of expiry / revision
[List all Permits Required in connection with Project]			

APPENDIX 5: [NOT USED]

APPENDIX 6: MAINTENANCE LIMITS AND LIMITS OF PERFORMANCE SECTIONS

[Include Schematic drawings that show the Maintenance Limits and the limits of the Performance Sections before Final Acceptance in accordance with Section 27.1 of the DB Specifications]

APPENDIX 7: [NOT USED]

APPENDIX 8: [NOT USED]

APPENDIX 9: PERFORMANCE AND MEASUREMENT TABLES

[Insert the latest version of the Performance and Measurement Tables]

APPENDIX 10: MAINTENANCE FACILITY LOCATION

[Insert a map showing the location of the Maintenance Facility]

APPENDIX 11: [NOT USED]

APPENDIX 12: MAINTENANCE MANAGEMENT SYSTEM DETAILS

[Insert the required details of the MMS]

APPENDIX 13: MMP PROCEDURES

MMP procedures are shown below. *[Add additional procedures as necessary and provide cross references to the applicable section of the MMP]*

MMP Procedure Number	MMP Procedure Name
MMP-001	Submittals and Coordination with TxDOT, Other Agencies and Third Parties
MMP-002	Agency Coordination for Oversize Loads
MMP-003	Not Used
MMP-004	Maintenance of Facilities, Vehicles, and Equipment Plan
MMP-005	Emergency and Incident Management
MMP-006	Incident Damage Reports, Third Party Claims and Repairs
MMP-007	Complaint Review and Response
MMP-008	Customer Satisfaction Data Collection System
MMP-009	Snow and Ice Control Plan
MMP-010	Severe Weather Evacuation Plan
MMP-011	Hazardous Materials Management Plan
MMP-012	Implementation of SW3P after Substantial Completion
MMP-013	Implementation of Spill Prevention and Countermeasures Plan
MMP-014	Implementation of Pollution Prevention Plan
MMP-015	Implementation of Waste Management
MMP-016	Implementation of Recycling Plan
MMP-017	Implementation of Environmental Procedures and Training
MMP-018	Mitigation Procedures for Impacts to Neighboring Facilities
MMP-019	Not Used
MMP-020	Establishing Maintenance Management System
MMP-021	Defect Categorization and Repair
MMP-022	Maintenance Inspection Plan
MMP-023	Maintenance Repair Submittal Plan
MMP-024	Not Used
MMP-025	Not Used
MMP-026	Implementation of Safety Plan
MMP-027	Traffic Collection and Reporting
MMP-028	Lane Closures and Traffic Control
MMP-029	Implementation of Public Information & Communications Plan
MMP-030	Not Used
MMP-031	Not Used
MMP-032	Updating MMP Plan

APPENDIX 14: TEMPLATE FOR TYPICAL PROCEDURE

1. PURPOSE AND NEED

[List the reason for the procedure's implementation.]

1.1 Methodologies

[List the methodologies to be defined as part of the procedure.]

2. SCOPE

[Define the limits of the procedure. Define individuals or workgroups to whom the procedure applies.]

3. DEFINED TERMS

- *[List the terms defined as part of the procedure]*

4. STEPS IN PROCEDURE

[Describe the procedure, in detail. List all steps. Assign individual responsibility for implementing the procedure]

[Include tables, flowcharts and figures as applicable.]

5. DOCUMENT CONTROL

[List the methods by which the procedure will be documented and archived. Define the location at which the procedure's records will be filed.]

REFERENCES

[Reference applicable documents within the contract with specific section and page locations.]

Approved By:

_____ _____

First Name Last Name
Maintenance Manager (MM) **Date**

_____ _____

First Name Last Name
Procedure Owner **Date**

RECORD OF REVISIONS

Rev.	Date Issued	Pages Affected	Comments
0	*XX/XX/XXXX*	*All*	*Initial Issue*
1	*XX/XX/XXXX*	*XX-XX*	*Add brief comment regarding revision*

APPENDIX 15: FORMS FOR MAINTENANCE PROCEDURES

[Where maintenance procedures listed in Appendix 13 require separate forms, include on table below. The form number shall directly relate to the procedure number. Change and complete as needed and provide references to Section of the MMP.]

MMP Form Number	MMP Form Name
	Trip Inspection Form
	Equipment Inspection Form
	Purchase Order Form
	Daily Roadway Inspection Form
	Monthly Roadway Inspection Form
	Lighting Inspection form
	Repair Log for Inspections
	Incident Report Form
	Incident Call Log
	Training Attendance Form
	[Add additional forms as required]

APPENDIX 16: QUALITY POLICIES AND PROCEDURES

[Insert here the quality policies and procedures applicable to the Maintenance Work]

Texas Department of Transportation

DESIGN-BUILD SPECIFICATIONS Items 10-30

Attachment 29-1

Toll Facility Responsibility Matrix

November 9, 2018

Attachment 29-1

Toll Facility Responsibility Matrix

LEGEND		WORK DESCRIPTION	
Primary Responsibility[1]	A	1	2
Support/Coordination Responsibility[2]	B	Design/Procure	Install and/or Construct
No Responsibility	C		

Element/Task/Component/Sub-system	DB Contractor		Systems Integrator (SI)		Comments Other Responsibility/Information
	1	2	1	2	
FACILITIES					
1. Toll Zone layout design	A	N/A	B	N/A	See Section 29.3 of DB Specifications and Attachment 29-2 (Typical Toll Zone Layout).
2. Electrical conduit and conductor between the following limits: • from metered power service to electrical ground box (adjacent to metered power service) • from electrical ground box (adjacent to metered power service) to electrical ground box (adjacent to concrete pad foundation for roadside equipment) • from electrical ground box (adjacent to concrete pad foundation for roadside equipment) to roadside toll equipment	A	A	B	B	DB Contractor to furnish and install all required conduit and ground boxes.

Element/Task/Component/Sub-system	DB Contractor		Systems Integrator (SI)		Comments Other Responsibility/Information
	1	2	1	2	
3. Electrical conductor between the following limits: • from electrical ground box (adjacent to concrete pad foundation for roadside equipment) to backup power systems • from electrical ground box (adjacent to concrete pad foundation for roadside equipment) to electrical ground box (adjacent to toll gantry) • from electrical ground box (adjacent to toll gantry) to ETCS Elements	C	B	A	A	DB Contractor shall coordinate access to roadway for installation.
4. Electrical conductor conduit between the following limits: • from electrical ground box (adjacent to concrete pad foundation for roadside equipment) to fuel tank for backup power systems • from electrical ground box (adjacent to concrete pad foundation for roadside equipment) to electrical ground box (adjacent to toll gantry) • from electrical ground box (adjacent to toll gantry) to ETCS Elements	A	A	B	B	DB Contractor to furnish and install all required conduit and ground boxes.
5. Concrete encased duct bank for tolling communication cable and conduit for the length of the corridor	A	A	B	B	

Element/Task/Component/Sub-system	DB Contractor		Systems Integrator (SI)		Comments Other Responsibility/Information
	1	2	1	2	
6. Tolling communication cable and conduit in concrete encased duct bank for the length of the corridor	A	A	B	B	DB Contractor to provide fiber with 4 strands single mode dedicated fiber to each toll zone (e.g. 24 toll zones would require 96 fiber strands). No daisy chaining. DB Contractor to install pull strings, fiber optic markers, test stations and tracer wire with fiber optic cables
7. Tolling communication cable and conduit from concrete encased duct bank to communication termination cabinet	A	A	B	B	DB Contractor to provide and test tolling communication cable to termination cabinets adjacent to each toll zone equipment cabinet pad.
8. Tolling communication termination cabinet and concrete pad	A	A	B	B	DB Contractor to provide termination cabinet and concrete pad.
9. Tolling communication cable between the following limits: • from tolling communication termination cabinet to roadside equipment cabinets • from tolling communication termination cabinet to tolling communication ground box • from tolling communication ground boxes to ETCS Elements • from tolling communication ground box to loop sensor ground box • from loop sensor ground box to in-pavement loop sensors	C	B	A	A	

Element/Task/Component/Sub-system	DB Contractor		Systems Integrator (SI)		Comments Other Responsibility/Information
	1	2	1	2	
10. Tolling communication cable conduit between the following limits: • from tolling communication termination cabinet to roadside equipment cabinets • from tolling communication termination cabinet to tolling communication ground box • from tolling communication ground boxes to ETCS Elements • from tolling communication ground boxes to loop sensor ground box • from loop sensor ground box to in-pavement loops sensors	A	A	B	B	DB Contractor to furnish and install all required conduit and ground boxes.
11. In-pavement loop sensors	C	B	A	A	DB Contractor to provide access to SI to saw cut and install in-pavement loop sensors.
12. Conduit stub ups for loop sensors	A	A	B	B	SI to provide stub up locations to DB Contractor.
13. Roadside toll equipment cabinets (including power, communication and HVAC systems)	C	B	A	A	SI to install complete. DB Contractor will coordinate access to roadway for installations.
14. Concrete pad foundation for roadside toll equipment cabinets	A	A	B	B	SI to provide requirements for pads/foundations to be incorporated in DB Contractor's design. DB Contractor to design and construct pads/foundations.
15. Concrete riprap at concrete pad foundation for roadside toll equipment cabinets	A	A	B	B	
16. Complete backup power systems: generators, automatic transfer switches, fuel tanks, and electrical conductor	C	B	A	A	DB Contractor shall coordinate access to roadway for installation.

Element/Task/Component/Sub-system	DB Contractor		Systems Integrator (SI)		Comments Other Responsibility/Information
	1	2	1	2	
17. Concrete pad/foundation (including level grading and earthwork) for fuel tank for backup power systems	A	A	B	B	DB Contractor to furnish and install pads and conduit.
18. Battery backup system for the lane controllers/tolling equipment at Toll Zones	C	B	A	A	DB Contractor will coordinate access to roadway for installations.
19. Toll Zone maintenance drive	A	A	B	B	DB Contractor to design and construct maintenance driveways.
20. Concrete traffic barrier and foundation, barrier end treatments, Toll Zone drainage, grading/earthwork, SW3P and retaining walls within Toll Zone	A	A	B	B	All non-pavement reinforcement (barrier, etc.) within the Toll Zone shall be epoxy coated.
21. Toll gantry structures and foundations (includes columns and trusses)	A	A	B	B	SI to provide specific requirements for gantries and foundations to be incorporated in DB Contractor's design. DB Contractor to design and construct gantries and foundations.
22. Lightning protection and grounding ring	A	A	B	B	DB Contractor to furnish and install required lightning protection and grounding. DB Contractor shall supply shop drawings for SI review.
23. Toll equipment mounted on gantries	B	B	A	A	SI to install any required equipment on gantries.
24. Toll equipment mounts/brackets on gantries	B	B	A	A	SI to install any required equipment mounts on gantries. SI to coordinate with DB during the design phase to incorporate any required framing to support equipment mounts.
25. Toll Zone pavement structure, using special pavement section and conduit stub ups for pavement loop sensors, conduit, and ground boxes, see Attachment 29-3 (Toll Zone Pavement Details)	A	A	B	B	SI to provide pavement loop details with stub-up locations. SI will coordinate with DB Contractor for joint layouts. DB Contractor to construct Stub Ups to terminate in junction boxes, provided by DB Contractor, adjacent to toll zone pavement.

Element/Task/Component/Sub-system	DB Contractor		Systems Integrator (SI)		Comments Other Responsibility/Information
	1	2	1	2	
26. Signing (except for toll zone maintenance drive signing)	A	A	B	C	DB Contractor shall be responsible for all signing on the project with the exception of toll zone maintenance signing.
27. Toll zone maintenance drive signing	B	B	A	A	SI shall be responsible for toll zone maintenance drive signing.
28. Network diagrams	A	A	B	B	DB Contractor shall provide network diagrams for tolling infrastructure for SI review.
29. Traffic control/safe work zone	A	A	B	B	SI to provide DB Contractor detailed lane closure requirements for installation and testing of ETCS locations. DB Contractor to provide TCP and implementation of lane closures for SI work, in accordance with Item 26, "Traffic Control."
ELECTRONIC TOLL COLLECTION SYSTEM (ETCS) SUB-SYSTEMS					
30. Automatic Vehicle Classification System and Image Capturing System (ICS) Hardware	C	B	A	A	DB Contractor will coordinate access to roadway for installations.
31. Computer rack system, routers, hubs, switches, firewalls, VPN, modems, patch/distribution panels	C	B	A	A	DB Contractor will coordinate access to roadway for installations.
32. Toll plaza host computer	C	C	A	A	
33. Lane controller hardware	C	B	A	A	DB Contractor will coordinate access to roadway for installations on DB Contractor provided structures.
34. Communication equipment	C	B	A	A	DB Contractor will coordinate access to roadway for installations.
35. Support equipment at TxDOT designated customer service center	C	C	A	A	
36. Commissioning and site acceptance testing	C	B	A	A	DB Contractor will coordinate access to roadway for testing.

Element/Task/Component/Sub-system	DB Contractor		Systems Integrator (SI)		Comments Other Responsibility/Information
	1	2	1	2	
37. Lane controller software	C	C	A	A	
38. Plaza computer software	C	C	A	A	
39. Host computer software	C	C	A	A	
40. Toll collection system application software	C	C	A	A	
41. Maintenance Online Management System Software	C	C	A	A	
42. Operational test	C	C	A	A	
43. Training: (user and maintenance)	C	C	A	A	
44. Documentation: (user and maintenance)	C	C	A	A	
45. Documentation: ETCS installation/electrical design and plans	C	C	A	A	
46. Documentation: civil as-built drawings	A	A	C	C	
47. Documentation: ETCS as-built drawings, and SI contract closeout documents	C	C	A	A	
48. FCC licenses/regulations as applies to toll systems	C	C	A	A	

1. *Primary Responsibility: Work which the identified party shall perform in accordance with the requirements of the Design-Build Contract*
2. *Support/Coordination Responsibility: Providing and or obtaining input on Work requirements by/from the identified party*

Texas Department of Transportation

DESIGN-BUILD SPECIFICATIONS
Items 10-30

Attachment 29-2
Typical Toll Zone Layout

November 9, 2018

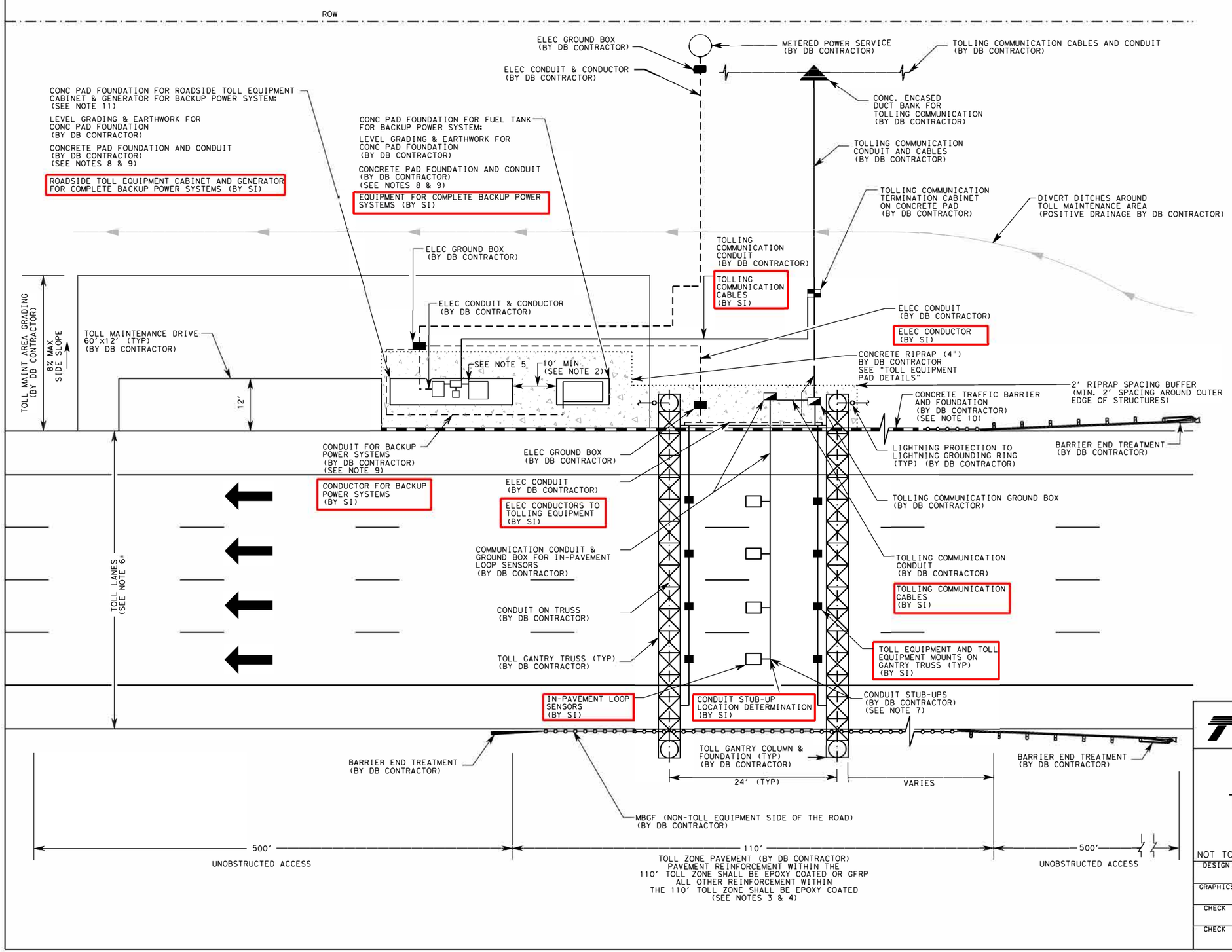

LEGEND

- ELEC GROUND BOX (BY DB CONTRACTOR)
- TOLLING COMMUNICATION GROUND BOX (BY DB CONTRACTOR)
- TOLLING COMMUNICATION TERMINATION CABINET (BY DB CONTRACTOR)
- ELEC CONDUIT & CONDUCTORS
- METERED POWER SERVICE (BY DB CONTRACTOR)
- PAVEMENT LOOP SENSOR (BY SI)
- DUCT BANK FOR TOLLING COMMUNICATION (BY DB CONTRACTOR)
- TOLLING COMMUNICATION CONDUIT & CABLES
- XXX SI RESPONSIBILITIES

NOTES:

1. ALL CONDUIT BY DB CONTRACTOR.
2. MINIMUM 10' BUFFER REQUIRED BETWEEN ROADSIDE TOLL EQUIPMENT CONC PAD FOUNDATION AND FUEL TANK CONC PAD FOUNDATION.
3. TOLLING PAVEMENT WITHIN THE 110' DIMENSIONED LENGTH SHALL CONFORM TO REQUIREMENTS SHOWN IN THE "TOLL ZONE PAVEMENT DETAILS".
4. ALL NON-PAVEMENT REINFORCEMENT WITHIN THE 110' TOLL ZONE SHALL BE EPOXY COATED (e.g. BARRIER, MISC CONC, PAVEMENT, ETC).
5. ROADSIDE TOLL EQUIPMENT CABINETS (POWER, COMM, HVAC) TO BE PLACED BY SI.
6. REFER TO DB SPECIFICATIONS FOR ROADWAY GEOMETRY & LANE CONFIGURATION.
7. CONDUIT STUB-UPS BY DB CONTRACTOR, INSTALLED PER SI SPECIFICATIONS.
8. CONCRETE PADS FOR ROADSIDE TOLL EQUIPMENT CABINET AND FUEL TANK SHALL BE LEVEL, NO SLOPE.
9. CONDUIT TO EXTEND A MINIMUM OF 3" ABOVE CONCRETE PAD FOR BACKUP POWER SYSTEMS.
10. RIGID BARRIER PROTECTION SHALL BE PROVIDED BY THE DB CONTRACTOR FOR THE BACKUP POWER SYSTEMS CONCRETE PAD.
11. ROADSIDE TOLL EQUIPMENT SHALL BE LOCATED NO MORE THAN 100' FROM THE FURTHEST TOLLED LANE.

Texas Department of Transportation
© 2018

TYPICAL TOLL ZONE LAYOUT

NOT TO SCALE

DESIGN	FED. RD. DIV. NO.	STATE PROJECT NO.		HIGHWAY NO.
GRAPHICS				
	STATE	DISTRICT	COUNTY	SHEET NO.
CHECK				
CHECK	CONTROL	SECTION	JOB	

Texas Department of Transportation

DESIGN-BUILD SPECIFICATIONS
Items 10-30

Attachment 29-3
Toll Zone Pavement Details

November 9, 2018

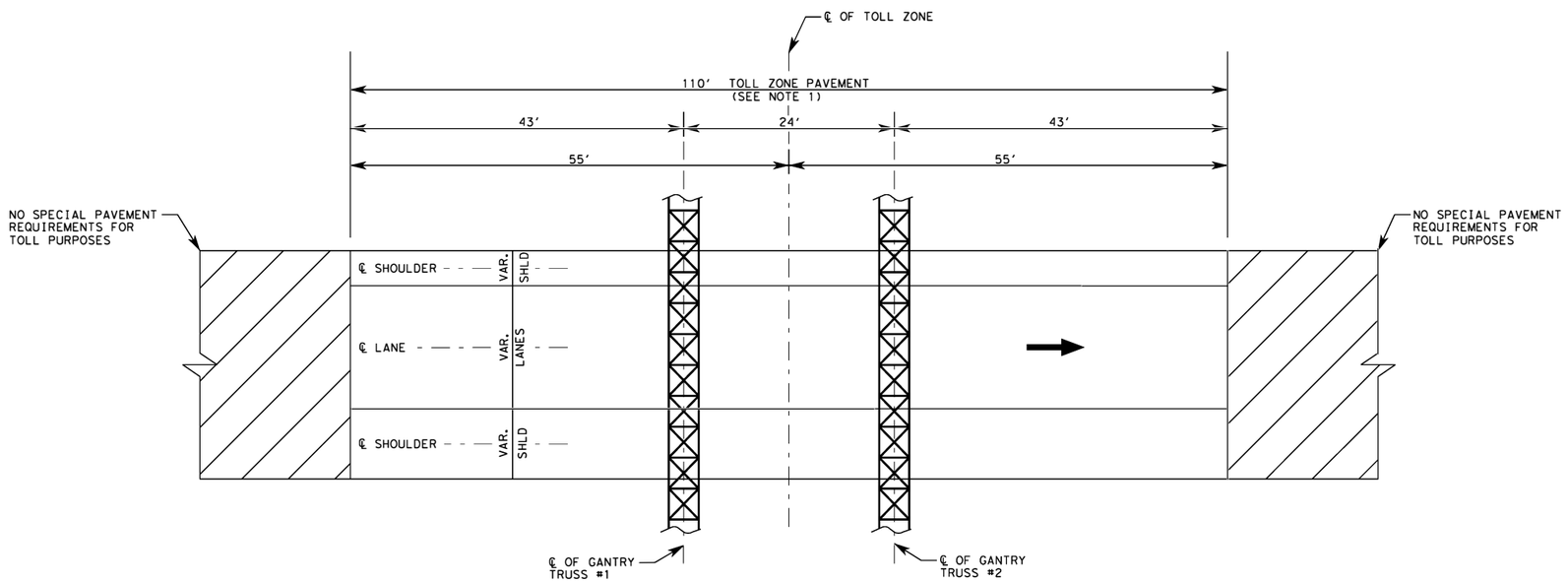

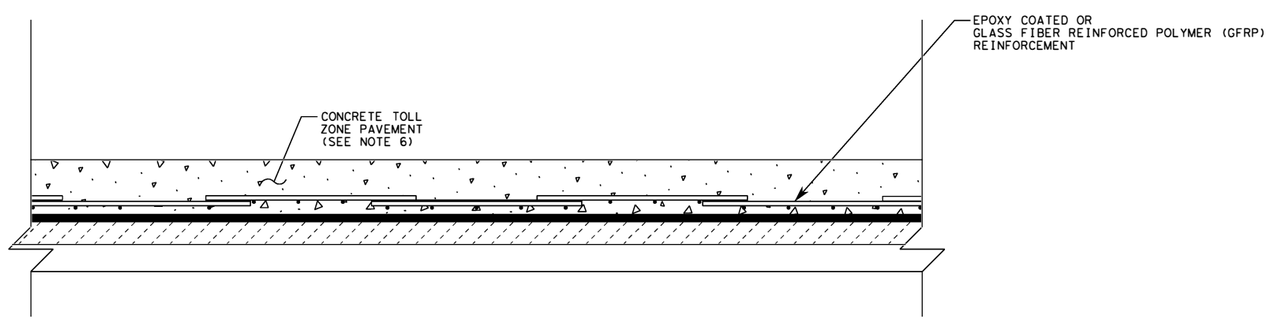

NOTES:

1. NO CONSTRUCTION JOINTS ARE ALLOWED WITHIN THE TOLL ZONE PAVEMENT AREA. LONGITUDINAL AND TRANSVERSE EXPANSION JOINTS ARE ONLY ALLOWED PER JOINT AND STUBUP DETAIL SHEETS.
2. ALL PAVEMENT REINFORCEMENT WITHIN THE TOLL ZONE SHOULD BE EPOXY COATED OR GFRP.
3. NON-PAVEMENT REINFORCEMENT MUST BE EPOXY COATED WITHIN TOLL ZONE LIMITS.
4. ALL ACCESSORIES SUCH AS TIES, BAR CHAIRS, SUPPORTS OR CLIPS SHALL BE NON-FERROUS, PLASTIC, PRECAST MORTAR OR CONCRETE BLOCK SUPPORTS OR AS APPROVED BY THE ENGINEER.
5. CONSTRUCTION JOINTS SHALL NOT CROSS PAVEMENT LOOPS.
6. TYPICAL PAVEMENT SHOWN FOR REFERENCE ONLY. PAVEMENT DESIGN SHALL BE PERFORMED BY DB CONTRACTOR.

Texas Department of Transportation
© 2018

TOLL ZONE PAVEMENT DETAILS

NOT TO SCALE

DESIGN	FED. RD. DIV. NO.	STATE PROJECT NO.		HIGHWAY NO.
GRAPHICS				
	STATE	DISTRICT	COUNTY	SHEET NO.
CHECK				
CHECK	CONTROL	SECTION	JOB	

Texas Department of Transportation

DESIGN-BUILD SPECIFICATIONS
Items 10-30

Attachment 29-4
Toll Gantry Requirements

November 9, 2018

NOTES:

1. CONDUIT IN CONCRETE COLUMNS WILL VARY DEPENDING ON COLUMN DIMENSIONS AND OTHER DESIGN CONSIDERATIONS.

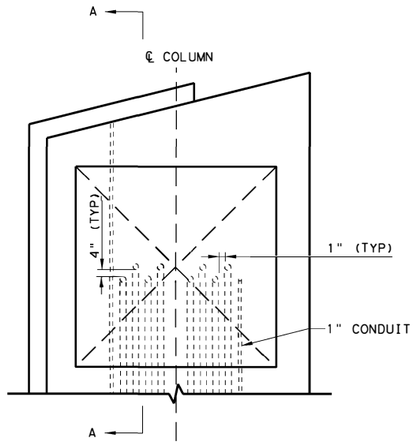

1 TYPICAL CONDUIT LAYOUT (FRONT ELEVATION VIEW)
SCALE: NTS

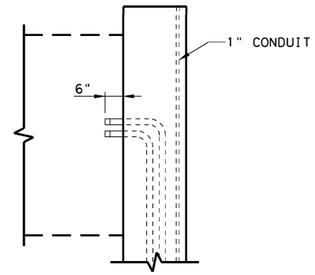

2 TYPICAL CONDUIT LAYOUT (SECTION A-A)
SCALE: NTS

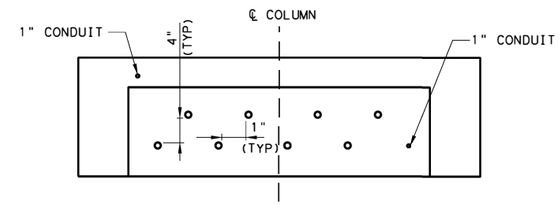

3 TYPICAL COLUMN CONDUIT LAYOUT (PLAN VIEW)
SCALE: NTS

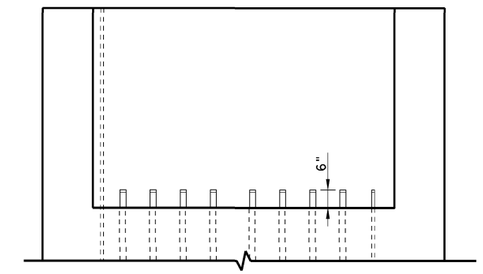

4 TYPICAL COLUMN ELEVATION VIEW
SCALE: NTS

TYPICAL CONDUIT DETAILS FOR CONCRETE COLUMNS

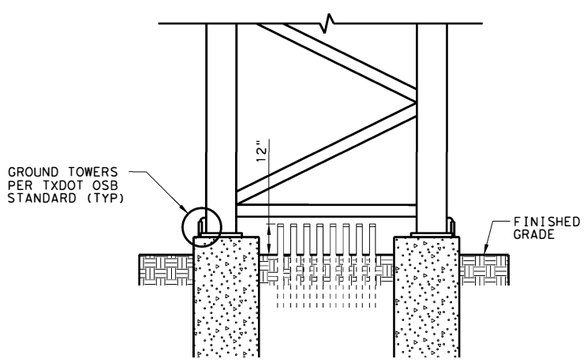

5 TYPICAL OSB TOWER DETAIL (ELEVATION VIEW)
SCALE: NTS

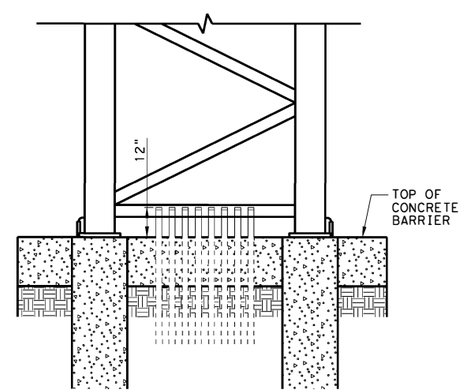

6 TYPICAL OSB TOWER DETAIL IN BARRIER (ELEVATION VIEW)
SCALE: NTS

TYPICAL CONDUIT DETAILS FOR TRUSS STRUCTURES

Texas Department of Transportation
© 2018

TOLL GANTRY REQUIREMENTS

NOT TO SCALE — SHEET 1 OF 3

DESIGN	FED. RD. DIV. NO.	STATE PROJECT NO.		HIGHWAY NO.
GRAPHICS				
	STATE	DISTRICT	COUNTY	SHEET NO.
CHECK				
CHECK	CONTROL	SECTION	JOB	

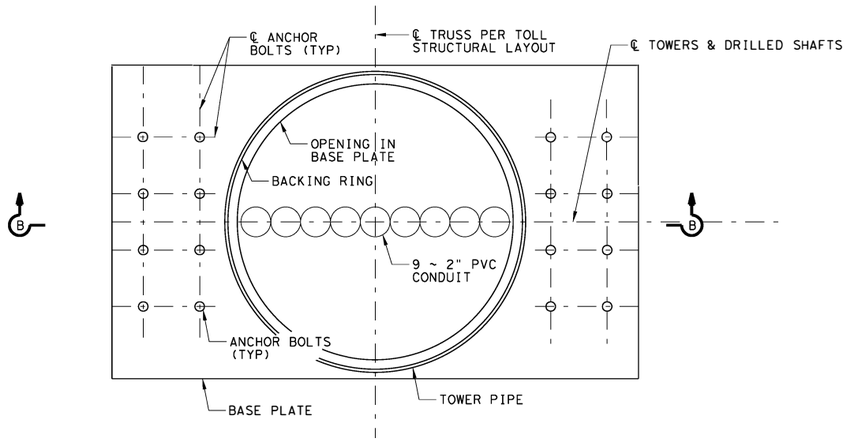

1 TYPICAL CONDUIT LAYOUT (PLAN VIEW)
SCALE: NTS

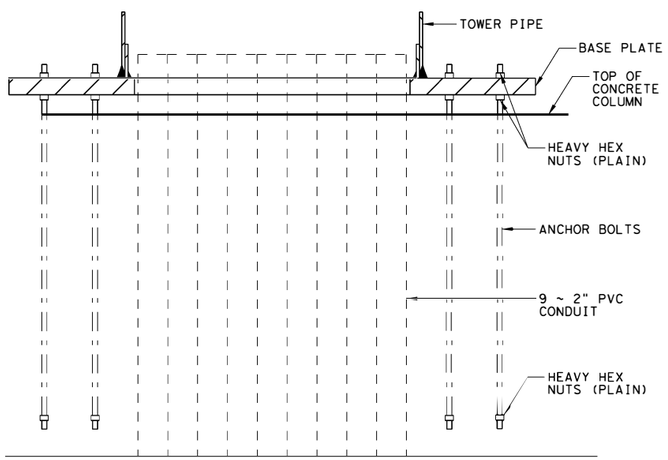

2 TOWER BASE PLATE (SECTION B-B)
SCALE: NTS

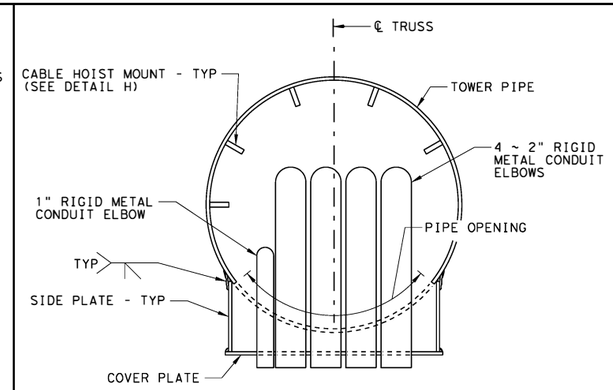

3 SINGLE CANTILEVER EXIT BOX DETAIL (PLAN VIEW)
SCALE: NTS

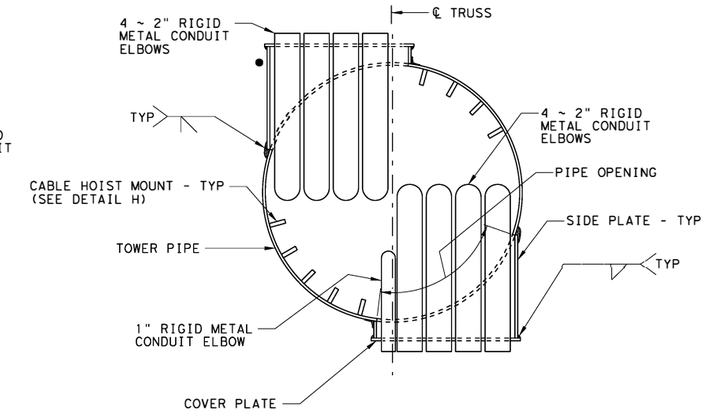

4 DOUBLE CANTILEVER EXIT BOX DETAIL (PLAN VIEW)
SCALE: NTS

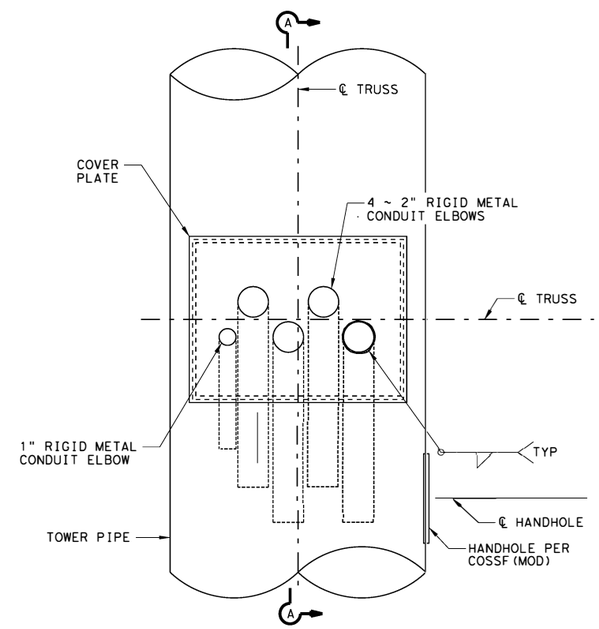

5 SINGLE CANTILEVER EXIT BOX DETAIL (ELEVATION VIEW)
SCALE: NTS

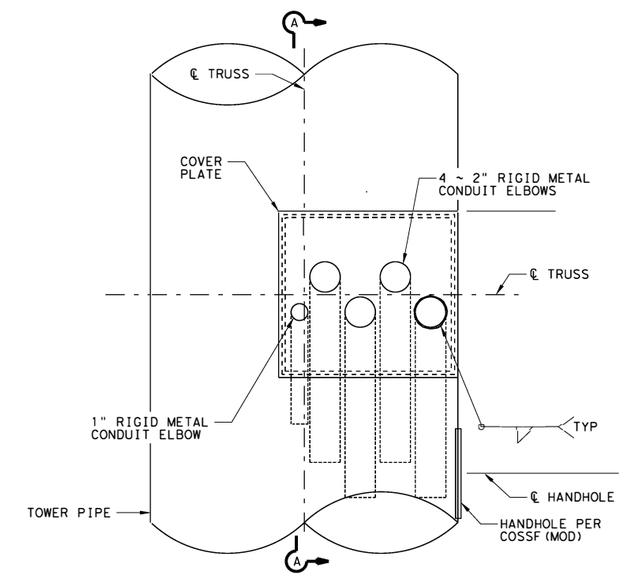

6 DOUBLE CANTILEVER EXIT BOX DETAIL (ELEVATION VIEW)
SCALE: NTS

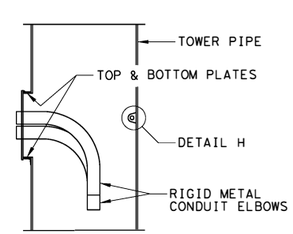

7 SECTION A-A
SCALE: NTS

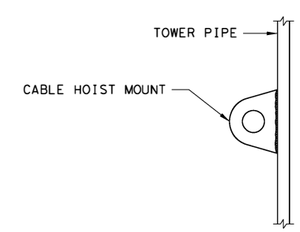

8 DETAIL H
SCALE: NTS

Texas Department of Transportation
© 2018

TOLL GANTRY REQUIREMENTS

NOT TO SCALE — SHEET 2 OF 3

DESIGN	FED. RD. DIV. NO.	STATE PROJECT NO.		HIGHWAY NO.
GRAPHICS				
	STATE	DISTRICT	COUNTY	SHEET NO.
CHECK				
CHECK	CONTROL	SECTION	JOB	

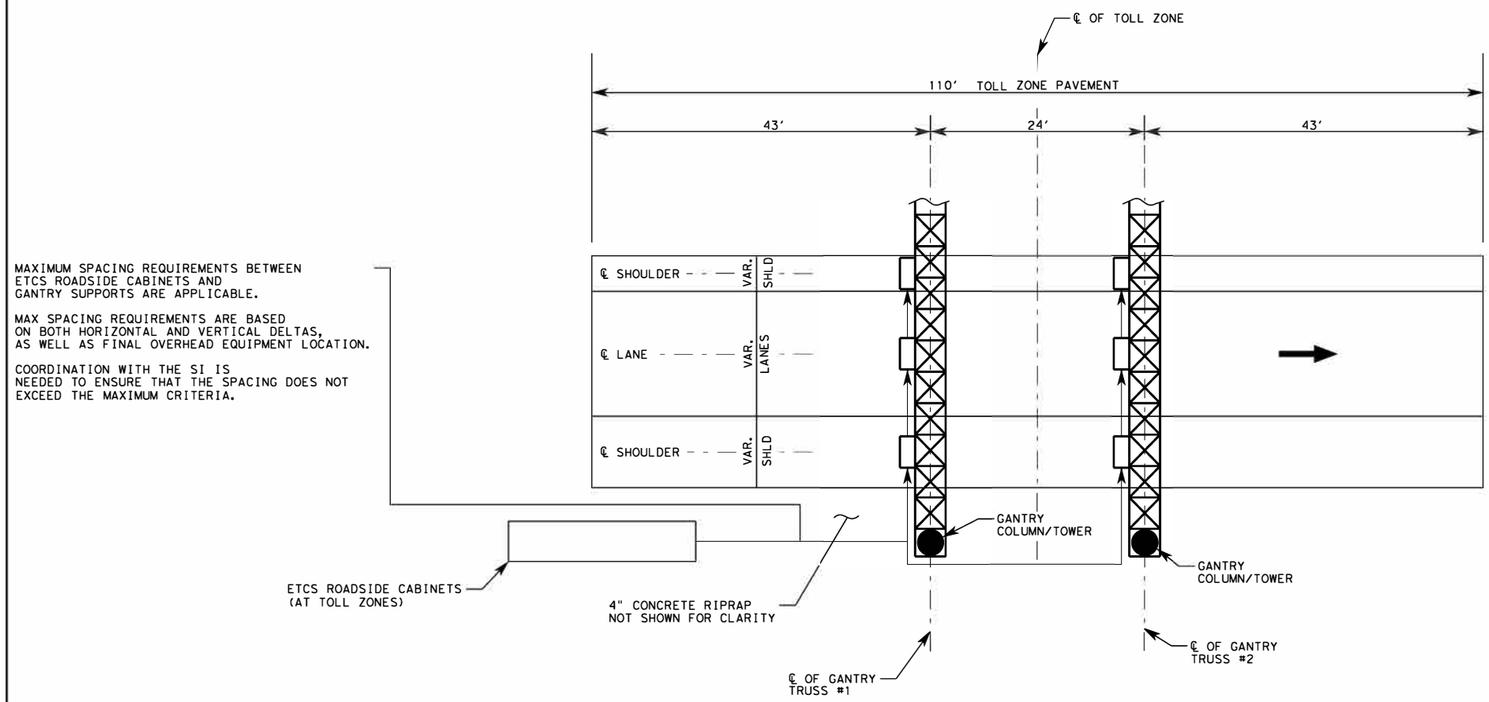

NOTES:

1. ALL STRUCTURAL FOUNDATIONS, GEOTECHNICAL ANALYSIS, LIGHTNING PROTECTION, AESTHETIC TREATMENT, COLUMNS/ TOWERS AND OVERHEAD SPANS SHALL BE THE RESPONSIBILITY OF THE DB CONTRACTOR.
2. DB CONTRACTOR SHALL PROVIDE BARRIER FOR THE TOLL GANTRY OR A GANTRY COLUMN THAT IS CRASHWORTHY.

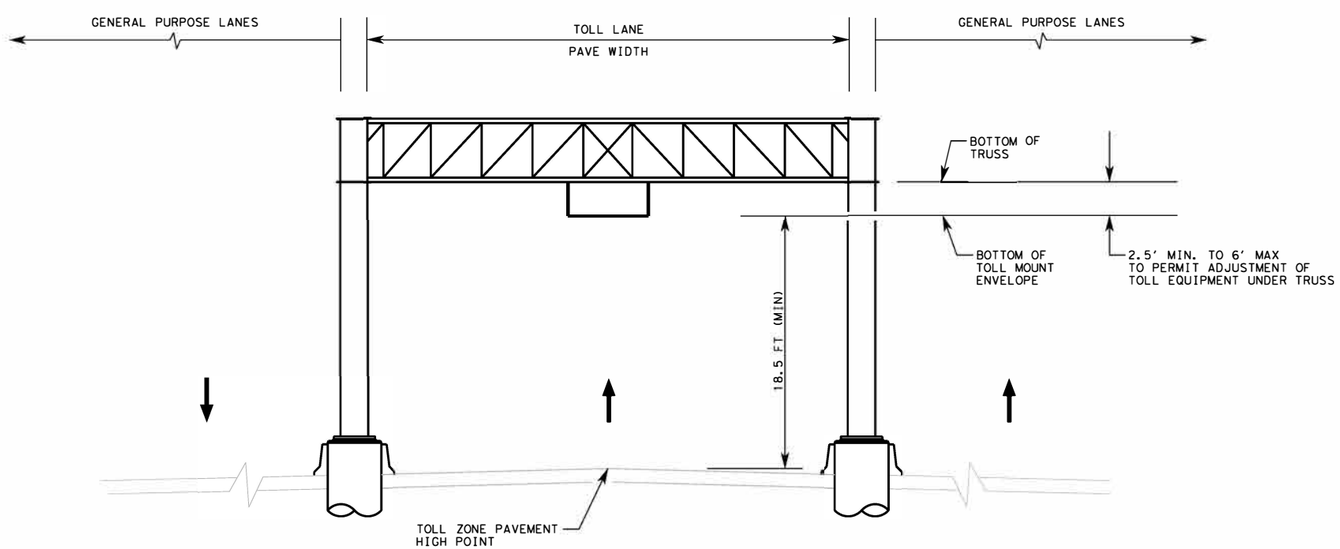

Texas Department of Transportation
© 2018

TOLL GANTRY REQUIREMENTS

NOT TO SCALE

SHEET 3 OF 3

DESIGN	FED. RD. DIV. NO.	STATE PROJECT NO.		HIGHWAY NO.
GRAPHICS				
	STATE	DISTRICT	COUNTY	SHEET NO.
CHECK				
CHECK	CONTROL	SECTION	JOB	

Texas Department of Transportation

DESIGN-BUILD SPECIFICATIONS
Items 10-30

Attachment 29-5
Toll Equipment Pad Details

November 9, 2018

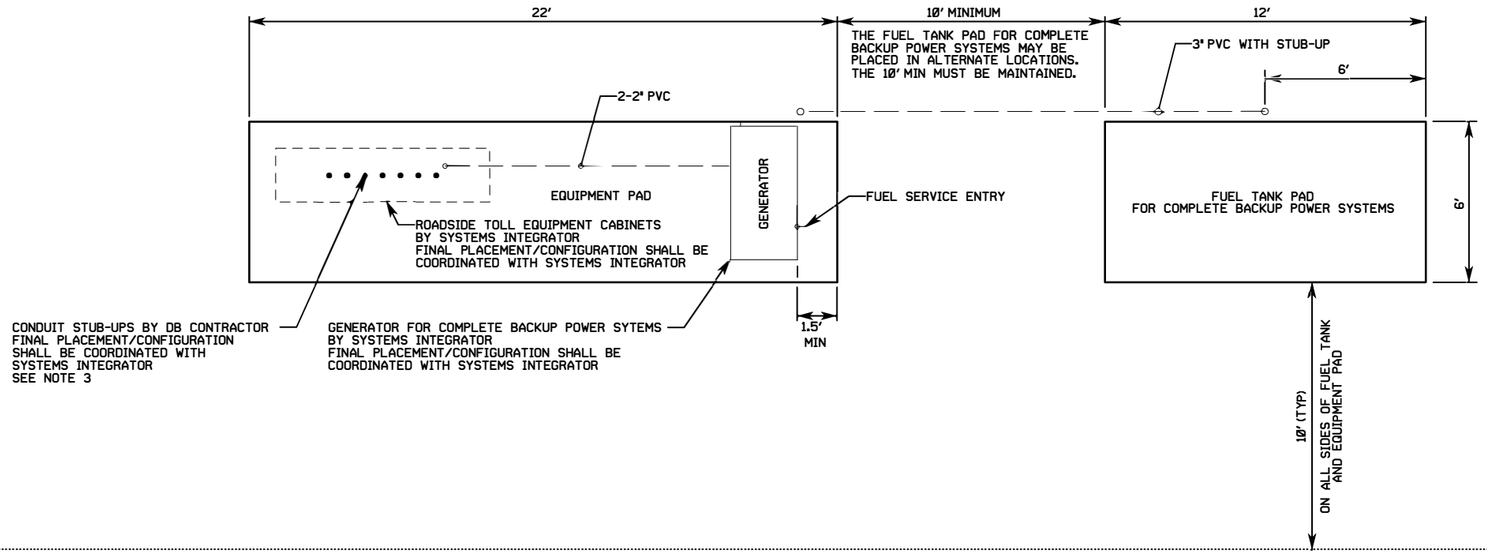

ROADSIDE CONCRETE PAD AND RIPRAP CONFIGURATION

N.T.S.

NOTES:

1. BUILD PADS TO BE LEVEL, NO SLOPE
2. CONCRETE SHALL BE CL "A"
3. CONDUIT TO EXTEND A MINIMUM OF 3" ABOVE PAD.
4. PLACE CONCRETE IN ACCORDANCE WITH ITEM 420, IN THE 2014 SPECIFICATION BOOK. FOR RIPRAP, PLACE 4", CL "B" IN ACCORDANCE WITH ITEM 432, IN THE 2014 SPECIFICATION BOOK.
5. UNLESS OTHERWISE SHOWN ON THE PLANS OR DIRECTED, PAD WILL BE 6" DEEP AND REINFORCED.
6. RIPRAP FOR VEGETATION CONTROL SHALL BE SLOPED FOR POSITIVE DRAINAGE.

RIPRAP LIMITS
BY DB CONTRACTOR
RIPRAP SHALL EXTEND 10' AROUND ALL SIDES OF THE EQUIPMENT AND FUEL TANK PADS. THE RIPRAP AROUND THE EQUIPMENT AND FUEL TANK PADS SHALL BE EXTENDED TO PROVIDE VEGETATION CONTROL FOR THE OTHER TOLL ZONE INFRASTRUCTURE (GANTRIES, ETC.)

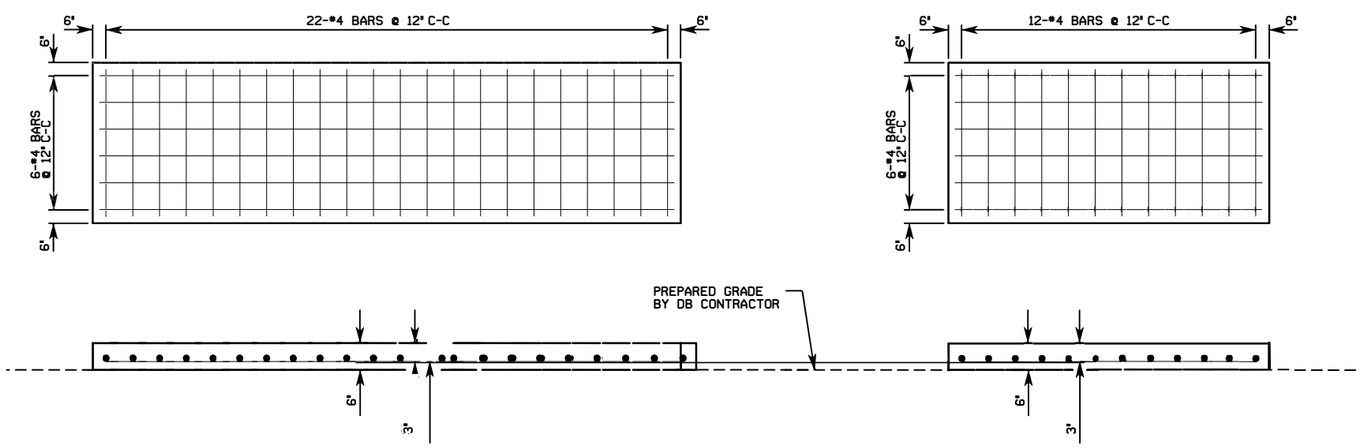

CONCRETE PAD REBAR DETAIL

N.T.S.

Texas Department of Transportation
© 2018

TOLL EQUIPMENT PAD DETAILS

NOT TO SCALE

DESIGN	FED.RD. DIV.NO.	STATE PROJECT NO.		HIGHWAY NO.
GRAPHICS				
	STATE	DISTRICT	COUNTY	SHEET NO.
CHECK				
CHECK	CONTROL	SECTION	JOB	

Texas Department of Transportation

DESIGN-BUILD SPECIFICATIONS
Items 10-30

Attachment 30-1
Managed Lane Facility Responsibility Matrix

November 9, 2018

Attachment 30-1

Managed Lane Facility Responsibility Matrix

For Managed Lanes Projects, all responsibilities contained in Attachment 29-1 (Toll Facility Responsibility Matrix) apply in addition to the responsibilities specified in this Attachment 30-1 (Managed Lane Facility Responsibility Matrix).

LEGEND		WORK DESCRIPTION	
Primary Responsibility	A	1	2
Support/Coordination Responsibility	B	Design/Procure	Install and/or Construct
No Responsibility	C		

Element/Task/Component/Sub-system	DB Contractor		Systems Integrator (SI)		Comments Other Responsibility/Information
	1	2	1	2	
FACILITIES					
1. ETCS speed/volume detection and Toll Rate DMS site layout design	A	N/A	B	N/A	See Section 30.3 of DB Specifications and Attachment 30-2 (Typical ETCS Speed/Volume Detection Site).
2. Electrical conduit and conductor from metered power service to SI provided controller cabinet	A	A	B	B	
3. Electrical conductor from controller cabinet to ETCS speed/volume detection equipment and/or Toll Rate DMS	C	B	A	A	DB Contractor shall coordinate access to roadway for installation.
4. Electrical conductor conduit from controller cabinet to ETCS speed/volume detection equipment and/or Toll Rate DMS	A	A	B	B	DB Contractor to furnish and install required conduit.

Element/Task/Component/Sub-system	DB Contractor		Systems Integrator (SI)		Comments Other Responsibility/Information
	1	2	1	2	
5. Tolling communication conduit and cable from tolling communication trunk line to DB Contractor provided communications ground box adjacent to controller cabinet concrete pad	A	A	B	B	DB Contractor to provide and test tolling communication cable to termination cabinets adjacent to each toll zone equipment cabinet pad.
6. Controller cabinet including 8-hour battery backup systems for Toll Rate DMS sites	C	B	A	A	SI to provide controller cabinets adjacent to each ETCS speed/volume detection site and Toll Rate DMS site.
7. Concrete pad/foundation and conduits for controller cabinet	A	A	B	B	SI to provide specific requirements for pads and conduit to be incorporated into DB Contractor's design. DB Contractor to furnish and install pads and conduit.
8. Tolling communication cable between the following limits: • from DB Contractor provided communications ground box adjacent to controller cabinet concrete pad to controller cabinet • from controller cabinet to ETCS speed/volume detection equipment and Toll Rate DMS	C	B	A	A	SI to pull communication cables from communications ground box to controller cabinet and install communication cables between ETCS Elements and controller cabinet.
9. Tolling communication cable conduit between the following limits: • from DB Contractor provided communications ground box adjacent to controller cabinet concrete pad to controller cabinet • from controller cabinet to ETCS speed/volume detection equipment and Toll Rate DMS	A	A	B	B	DB Contractor to furnish and install required conduit.

Element/Task/Component/Sub-system	DB Contractor		Systems Integrator (SI)		Comments Other Responsibility/Information
	1	2	1	2	
10. Overhead support structures and foundations for ETCS speed/volume detection equipment and Toll Rate DMS (includes columns)	A	A	B	B	SI to provide specific requirements for overhead support structures and foundations to be incorporated in DB Contractor's design. DB Contractor to design and construct overhead support structures and foundations.
11. ETCS speed/volume detection equipment mounts on overhead support structure	B	B	A	A	SI to install any required equipment mounts on overhead support structures. SI to coordinate with DB during the design phase to incorporate any required framing to support equipment mounts.
12. Static portion of Toll Rate DMS signs	A	A	B	C	
13. Toll Rate DMS modules	B	B	A	A	SI to install, connect, and terminate Toll Rate DMS message panels and controllers including communication wiring and power wiring from the Toll Rate DMS to the controllers in the controller cabinet.
14. ETCS speed/volume detection equipment	C	B	A	A	SI to provide equipment mounts, wiring and cables. SI to perform all ETCS speed/volume detection equipment installation and terminations, and make the connections to the electronics in the controller cabinets.
15. Traffic control/safe work zone	A	A	B	B	SI to provide DB Contractor detailed lane closure requirements for installation and testing of ETCS locations. DB Contractor to provide TCP and implementation of lane closures for SI work, in accordance with Item 26, "Traffic Control."

1. *Primary Responsibility: Work which the identified party shall perform in accordance with the requirements of the Design-Build Contract*
2. *Support/Coordination Responsibility: Providing and or obtaining input on Work requirements by/from the identified party*

Texas Department of Transportation

DESIGN-BUILD SPECIFICATIONS
Items 10-30

Attachment 30-2
Typical Details

November 9, 2018

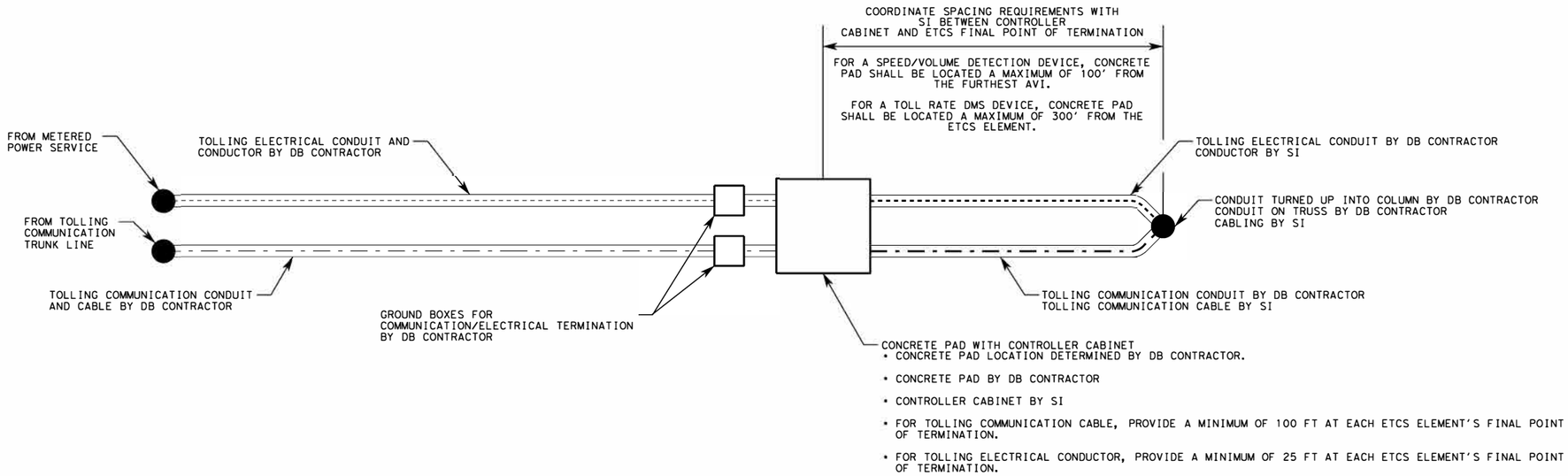

WORK DESCRIPTION AT SPEED/VOLUME AND TOLL RATE DMS SITES

1. THE DB CONTRACTOR WILL PROVIDE AND PLACE ALL CONDUIT.
2. THE SI WILL PROVIDE AND PLACE ALL TOLLING COMMUNICATION CABLE, CONDUCTOR, AND MISCELLANEOUS CABLING FROM THE CONCRETE PAD WITH CONTROLLER CABINET TO THE ETCS FINAL POINT OF TERMINATION.
3. THE SI WILL PROVIDE AND PLACE ALL SPEED AND VOLUME DETECTION EQUIPMENT.

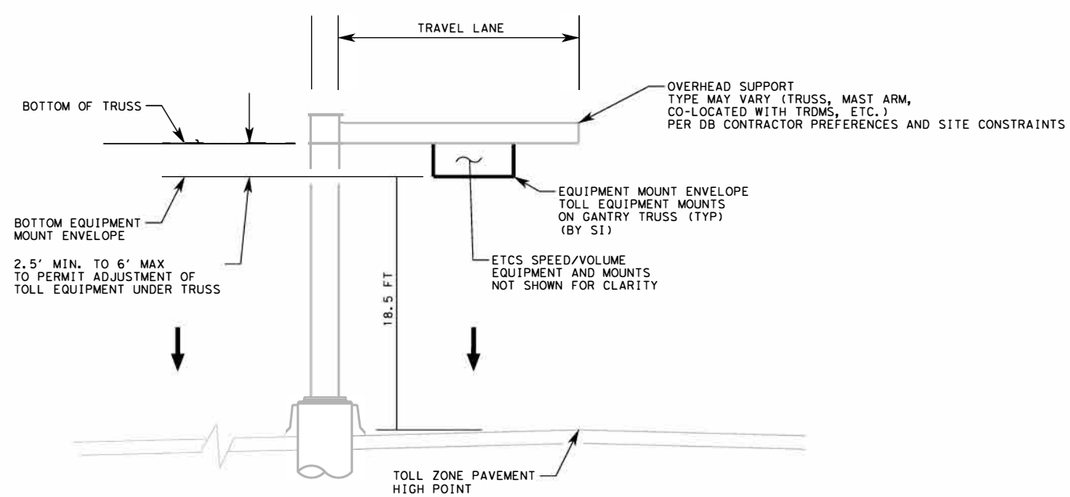

ETCS SPEED / VOLUME EQUIPMENT MOUNTING DETAIL

Texas Department of Transportation
© 2018

TYPICAL DETAILS
ETCS SPEED/
VOLUME DETECTION ZONE
AND
TOLL RATE DMS SITES

NOT TO SCALE

DESIGN	FED. RD. DIV. NO.	STATE PROJECT NO.		HIGHWAY NO.
GRAPHICS				
	STATE	DISTRICT	COUNTY	SHEET NO.
CHECK				
CHECK	CONTROL	SECTION	JOB	