FED. RD. DIV. NO.	FEDERAL AID PROJECT NO.		SHEET NO.
6	IM 0335(151)		1
STATE	STATE DIST.	COUNTY	
TEXAS	2	TARRANT	
CONT.	SECT.	JOB	HIGHWAY NO.
0014	16	255, ETC	IH 35W

STATE OF TEXAS
DEPARTMENT OF TRANSPORTATION

PLANS OF PROPOSED
STATE HIGHWAY IMPROVEMENT

FEDERAL AID PROJECT: IM 0335(151)

TARRANT COUNTY

IH-35W (URBAN FREEWAY)

VOLUME 1

LIMITS: FROM NORTH TARRANT PARKWAY TO IH 820

NET LENGTH OF PROJECT = 18,900.00 FT = 3.580 MI.

FUNCTIONAL CLASS: URBAN FREEWAY
DESIGN SPEED: 70 MPH MANAGED/GENERAL PUROOSE LANES
45 MPH RAMPS & MANAGED LANE RAMPS
40-45 MPH DIRECT CONNECTORS
40 MPH FRONTAGE ROADS
35 MPH CROSS STREETS

ADT	2010	2030
NORTH TARRANT PKWY TO US 287 SPLIT	115,100	178,700
US 287 SPLIT TO IH 820	174,900	269,800

INDEX OF SHEETS

SHEET NO.	DESCRIPTION
1	TITLE SHEET
2	INDEX OF SHEETS

TDLR INSPECTION REQUIRED

LOCATION	ROADWAY	BRIDGE	TOTAL
CSJ 0014-16-255	13,860.99 FT = 2.626 MI.	576.91 FT = 0.109 MI.	14,437.90 FT = 2.735 MI.
CSJ 0081-12-045	4,462.10 FT = 0.845 MI.	-	4,462.10 FT = 0.845 MI.
TOTAL	18,523.09 FT = 3.475 MI.	576.91 FT = 0.109 MI.	18,900.00 FT = 3.580 MI.
CSJ 0014-16-267	(ROW AND UTILITIES)	-	14,437.90 FT = 2.735 MI.

FOR THE CONSTRUCTION OF A FREEWAY FACILITY CONSISTING OF WIDENING, GRADING, DRAINAGE, STRUCTURES, SURFACE, AND STRIPING.

FINAL PLANS

LETTING DATE: _____
DATE CONTRACTOR BEGAN WORK: _____
DATE WORK WAS COMPLETED & ACCEPTED: _____
FINAL CONTRACT COST: _____
CONTRACTOR: _____

N

SCALE: 1" = 2 MILES (0 1 2)

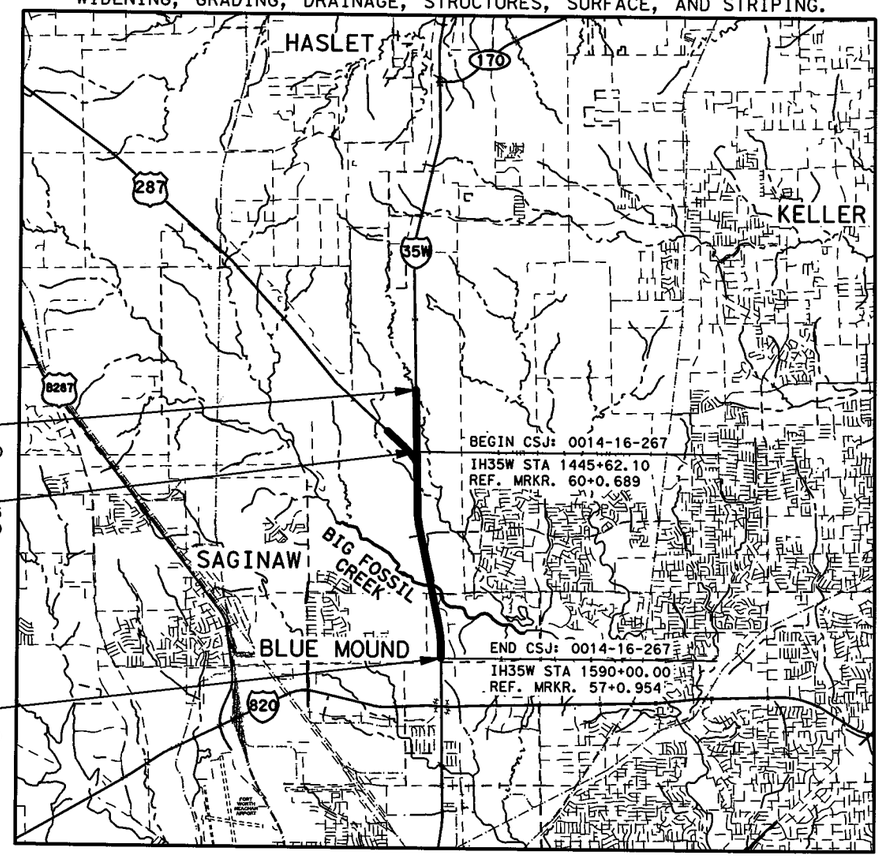

BEGIN PROJECT
CSJ: 0081-12-045
IH 35W STA 1401+00.00
REF. MRKR. 61+0.534

END CSJ: 0081-12-045
BEGIN CSJ: 0014-16-255
IH 35W STA 1445+62.10
REF. MRKR. 60+0.689

END PROJECT
CSJ: 0014-16-255
IH 35W STA 1590+00.00
REF. MRKR. 57+0.954

BEGIN CSJ: 0014-16-267
IH35W STA 1445+62.10
REF. MRKR. 60+0.689

END CSJ: 0014-16-267
IH35W STA 1590+00.00
REF. MRKR. 57+0.954

EXCEPTIONS: NONE
EQUATIONS: NONE
RAILROADS: NONE

STATE OF TEXAS — M. N. MOZAFFAR — 85191 — LICENSED PROFESSIONAL ENGINEER

STATE OF TEXAS — KURT W. AUNGST — 90848 — LICENSED PROFESSIONAL ENGINEER

I. S. ENGINEERS, LLC

KENNEDY CONSULTING

SUBMITTED BY 7/13/2012
M.N.M
PROJECT MANAGER

SUBMITTED BY 7/13/12
KWA
DEPUTY PROJECT MANAGER

TEXAS DEPARTMENT OF TRANSPORTATION

SUBMITTED FOR LETTING
AREA ENGINEER

RECOMMENDED FOR LETTING
DISTRICT DESIGN ENGINEER

APPROVED FOR LETTING
DIRECTOR, TRAFFIC OPERATIONS DIVISION

RECOMMENDED FOR LETTING
DISTRICT ENGINEER

APPROVED FOR LETTING
DIRECTOR, DESIGN DIVISION

SPECIFICATIONS ADOPTED BY THE TEXAS DEPARTMENT OF TRANSPORTATION, JUNE 1, 2004 AND SPECIFICATION ITEMS LISTED AND DATED AS FOLLOWS, SHALL GOVERN ON THIS PROJECT: REQUIRED CONTRACT PROVISIONS FOR ALL FEDERAL-AID CONSTRUCTION CONTRACTS (FORM FHWA 1273, MARCH 1994).

DRAWING DATE: 7/13/2012 FILENAME: S3BTITLE01.dgn

COUNTY TARRANT PROJ. NO. _____
HWY. NO. _____ LETTING DATE _____
DATE ACCEPTED _____

©2012 by Texas Department of Transportation; all rights reserved.

SHEET NO.	DESCRIPTION

VOLUME I

I. GENERAL

1	TITLE SHEET
2-6	INDEX OF SHEETS
7	PROJECT LAYOUT KEY MAP
8-17	PROJECT LAYOUTS
18-23	TYPICAL SECTIONS - EXISTING
24-54	TYPICAL SECTIONS - PROPOSED
55, 55A-55C, 56	TYPICAL SECTIONS - MISCELLANEOUS DETAILS
57, 57A-57_	GENERAL NOTES
58, 58A-58_	ESTIMATE AND QUANTITY SUMMARY
59-91	QUANTITY SUMMARY - TRAFFIC CONTROL
92	QUANTITY SUMMARY - REMOVAL
93-97, 97A-97B	QUANTITY SUMMARY - PAVEMENT
98-100A	QUANTITY SUMMARY - EARTHWORK
101-102	QUANTITY SUMMARY - MANAGED LN & GEN PURPOSE LN - ROADWAY ITEMS
103	QUANTITY SUMMARY - DIRECT CONNECTOR & RAMP - ROADWAY ITEMS
104-105	QUANTITY SUMMARY - FRONTAGE ROAD - ROADWAY ITEMS
106	QUANTITY SUMMARY - CROSS STREET - ROADWAY ITEMS
107	DRIVEWAY & MISCELLANEOUS
108	QUANTITY SUMMARY - RETAINING WALL
109-126	SUMMARY OF DRAINAGE QUANTITIES
127	QUANTITY SUMMARY - EROSION CONTROL
128-132	QUANTITY SUMMARY - BRIDGES
133-135	QUANTITY SUMMARY - SIGN ASSEMBLIES
136-137, 137A-137B	QUANTITY SUMMARY - STRIPING ITEMS
138	QUANTITY SUMMARY - DELINEATION ITEMS
139-143	ILLUMINATION SUMMARY
144-149	ITS SUMMARY
150-154	TRAFFIC SIGNAL SUMMARY
155-159	UTILITY SUMMARY
160-169	SUMMARY OF SMALL SIGNS
170-175	SUMMARY OF LARGE SIGNS

VOLUME II

II. TRAFFIC CONTROL PLAN

176	TITLE SHEET
177-181	INDEX OF SHEETS
182-183, 183A	CONSTRUCTION SEQUENCE NARRATIVE
184-193	OVERALL CONSTRUCTION SEQUENCE LAYOUT
194	ADVANCE WARNING SIGNS
195-204	CONSTRUCTION SEQUENCE LAYOUT - PHASE 1 STEP 1
205-208	TCP SECTION - PHASE 1 STEP 1
209-232	TRAFFIC CONTROL PLAN - PHASE 1 STEP 1
233	DETOUR RAMP 35S-BB
234-243	CONSTRUCTION SEQUENCE LAYOUT - PHASE 1 STEP 2
244-247	TCP SECTION - PHASE 1 STEP 2
248-271	TRAFFIC CONTROL PLAN - PHASE 1 STEP 2
272	TCP SECTION - PHASE 1 STEP 2B
273-274, 274A	TRAFFIC CONTROL PLAN - PHASE 1 STEP 2B
275	DETOUR DC 35S-287W
276-285	CONSTRUCTION SEQUENCE LAYOUT - PHASE 1 STEP 3
286-289	TCP SECTION - PHASE 1 STEP 3
290-313	TRAFFIC CONTROL PLAN - PHASE 1 STEP 3
314-323	CONSTRUCTION SEQUENCE LAYOUT - PHASE 2 STEP 1
324-327	TCP SECTION - PHASE 2 STEP 1
328-351	TRAFFIC CONTROL PLAN - PHASE 2 STEP 1
352-353	TRAFFIC CONTROL PLAN - PHASE 2 STEP 1B
354-355	TRAFFIC CONTROL PLAN - PHASE 2 STEP 1C
356-365	CONSTRUCTION SEQUENCE LAYOUT - PHASE 2 STEP 2
366-369	TCP SECTION - PHASE 2 STEP 2
370-393	TRAFFIC CONTROL PLAN - PHASE 2 STEP 2
393A	TRAFFIC CONTROL PLAN - PHASE 2 STEP 2B
394	DETOUR RAMP 35N-WCB
395-404	CONSTRUCTION SEQUENCE LAYOUT - PHASE 2 STEP 3
405-408	TCP SECTION - PHASE 2 STEP 3
409-432	TRAFFIC CONTROL PLAN - PHASE 2 STEP 3
432A-432C	TRAFFIC CONTROL PLAN - PHASE 2 STEP 3B
433-442	CONSTRUCTION SEQUENCE LAYOUT - PHASE 3 STEP 1
443-446	TCP SECTION - PHASE 3 STEP 1
447-470	TRAFFIC CONTROL PLAN - PHASE 3 STEP 1
470A-470B	TRAFFIC CONTROL PLAN - PHASE 3 STEP 1B
471	DETOUR RAMP NTP-35S
472	DETOUR DC 287E-35S
473-482	CONSTRUCTION SEQUENCE LAYOUT - PHASE 3 STEP 2
483-486	TCP SECTION - PHASE 3 STEP 2
487-510	TRAFFIC CONTROL PLAN - PHASE 3 STEP 2

SHEET NO.	DESCRIPTION

VOLUME II (CONT'D)

II. TRAFFIC CONTROL PLAN

510A	TCP SECTION - PHASE 3 STEP 2B
510B-510I	TRAFFIC CONTROL PLAN - PHASE 3 STEP 2B
511-520	CONSTRUCTION SEQUENCE LAYOUT - PHASE 4 STEP 1
521-524	TCP SECTION - PHASE 4 STEP 1
525-548	TRAFFIC CONTROL PLAN - PHASE 4 STEP 1
549-558	CONSTRUCTION SEQUENCE LAYOUT - PHASE 4 STEP 2
559-562	TCP SECTION - PHASE 4 STEP 2
563-586	TRAFFIC CONTROL PLAN - PHASE 4 STEP 2
587-596	CONSTRUCTION SEQUENCE LAYOUT - PHASE 5
597-600	TCP SECTION - PHASE 5
601-624	TRAFFIC CONTROL PLAN - PHASE 5
624A-624C	TRAFFIC CONTROL PLAN - PHASE 5B
625-630, 630A-630E	OFFSITE DETOUR PLAN
631	TEMPORARY RETAINING WALL DETAIL SHEET
632	CONSTRUCTION SEQUENCE FOR MISC DRIVEWAYS

STANDARDS

633-644	**BC(1)-07 THRU BC(12)-07
645	**WZ(TD)-03
646-647	**WZ(BTS-1)-03 AND WZ(BTS-2)-03
648	**WZ(STPM)-03
649	**WZ(UL)-03
650	**OMIT
651	**TCP(1-2)-12
652	**TCP(1-4)-12
653	**TCP(2-1)-12
654-656	**TCP(2-4)-12 THRU TCP (2-6)-12
657-658	**TCP(3-2)-98 AND TCP (3-3)-98
659-665	**TCP(6-1)-98A THRU TCP (6-7)-98A
666	**TCP(6-8)-98
667	**OMIT
668-669	**LPCB-10(TYPE1) AND LPCB-10(TYPE2)
670, 670A	**SSCB(2)-10
670B	**SSCB(5)-10
671	**REACT(W)-03

VOLUME III

III. ROADWAY DETAILS

672	TITLE SHEET
673-677	INDEX OF SHEETS
678-700	REMOVAL PLANS
701-704	HORIZONTAL AND VERTICAL CONTROL
705-720	HORIZONTAL ALIGNMENT DATA
721-723	ROADWAY PLAN AND PROFILE - MANAGED LANE TRANSITIONS
724-738	ROADWAY PLAN AND PROFILE - MANAGED LANES
739-742	ROADWAY PLAN AND PROFILE - GENERAL PURPOSE LANE TRANSITIONS
743-764	ROADWAY PLAN AND PROFILE - GENERAL PURPOSE LANES
765-766	ROADWAY PLAN AND PROFILE - GENERAL PURPOSE LANE TRANSITION
767-777	ROADWAY PLAN AND PROFILE - NORTHBOUND FRONTAGE ROAD
778-789	ROADWAY PLAN AND PROFILE - SOUTHBOUND FRONTAGE ROAD
790-809	ROADWAY PLAN AND PROFILE - RAMPS
810-823	ROADWAY PLAN AND PROFILE - DIRECT CONNECTORS
824-825	ROADWAY PLAN AND PROFILE - US 287
826-827	ROADWAY PLAN AND PROFILE - BASSWOOD BLVD
828-829	ROADWAY PLAN AND PROFILE - WESTERN CENTER BLVD
830	ROADWAY PLAN AND PROFILE - FOSSIL CREEK BLVD
831-832	SUPERELEVATION DATA
833-834	METAL BEAM GUARD FENCE SUMMARY
834A	CRASH CUSHION SUMMARY SHEET
835-836, 836A, 837, 837A, 838, 838A, 839-840	INTERSECTION LAYOUT
841-848	DRIVEWAY PROFILES
849-851	DRIVEWAY DETAILS
852-868	GORE CONTOUR PLANS
869-875	RIPRAP LAYOUT
876	RIPRAP DETAIL
877-878	U-TURN MEDIAN DETAILS
879-881	TRAFFIC ISLAND DETAILS
882-883	SUPPLEMENTAL GRADING
884-890	MISCELLANEOUS ROADWAY DETAILS
891-892	BTD (HOU)

SHEET NO.	DESCRIPTION

VOLUME III (CONT'D)

III. ROADWAY DETAILS

STANDARDS

893	*MBGF-09
894	*MBGF-11
895	*GF(31)-11
896	*GF(31)LS-11
897	*GF(31)DAT-11
898	*GF(31)TR-11
899	*GF(31)TL2-11
900	*GF(31)MS-11
901	*SGT(7S)31-11
902	*CRCP(1)-11
903	*TE(HMAC)-11
904	*BED-11
905	*PCTB(1)-04
906	*SSCB(1)-10
907	*SSCB(1F)-10
908	*SSCB(3)-10
909-910	*CSB(1)-10
911	*CSB(2)-10
912	*CDD-08(FW)
913	*CP-TD-03(FW)
914	*CP-TEP-03 (FW)
915	*RS(1)-10
916	*JS-03(FW)
917	*CC-CG(FW)
918-921	*PED-12
922	*PRD-06
923	*TRF
924-925	*SSTR
926	*CSWD-08(FW)
927	*CRVC (FW)
928	*LPD-00 (FW)
929	*REACT(N)-12
930	*SMTC(W)-06
931	*HEART-10

IV. RETAINING WALL DETAILS

932-934	RETAINING WALLS KEYMAP
935	RETAINING WALLS - PLAN AND PROFILE - NB01-A
936	RETAINING WALLS - TYPICAL SECTIONS - NB01-A
937	RETAINING WALLS - PLAN AND PROFILE - NB01-R
938	RETAINING WALLS - TYPICAL SECTIONS - NB01-R
939	RETAINING WALLS - PLAN AND PROFILE - NB02-A
940	RETAINING WALLS - TYPICAL SECTIONS - NB02-A

STATE OF TEXAS
KURT W. AUNGST
90848
LICENSED
PROFESSIONAL ENGINEER

* THE STANDARD SHEETS SPECIFICALLY IDENTIFIED ABOVE HAVE BEEN SELECTED BY ME OR UNDER MY RESPONSIBLE SUPERVISION AS BEING APPLICABLE TO THIS PROJECT.

KURT W. AUNGST, P.E. , P.E. 8/30/12 DATE

STATE OF TEXAS
M. N. MOZAFFAR
85191
LICENSED
PROFESSIONAL ENGINEER

** THE STANDARD SHEETS SPECIFICALLY IDENTIFIED ABOVE HAVE BEEN SELECTED BY ME OR UNDER MY RESPONSIBLE SUPERVISION AS BEING APPLICABLE TO THIS PROJECT.

M. N. MOZAFFAR, P.E. , P.E. 8/30/12 DATE

KENNEDY CONSULTING
TBPE REGISTRATION NO. F-926

I. S. ENGINEERS, LLC
TBPE REG. # F-11657

Texas Department of Transportation
© 2012

IH 35W FROM NORTH TARRANT PKWY TO IH 820

INDEX OF SHEETS

SHEET 1 OF 5

DESIGN	FED.RD. DIV.NO.	FEDERAL AID PROJECT NO.		HIGHWAY NO.
KCI	6	(SEE TITLE SHEET)		IH 35W
GRAPHICS	STATE	DISTRICT	COUNTY	SHEET NO.
KCI	TEXAS	FTW	TARRANT	2
CHECK	CONTROL	SECTION	JOB	
KCI	0014	16	255, ETC.	

FILENAME: S3BINDEX11.dgn

DRAWING DATE: 8/30/2012

SHEET NO.	DESCRIPTION

VOLUME III (CONT'D)

IV. RETAINING WALL DETAILS

941-943	RETAINING WALLS - PLAN AND PROFILE - NB02-L
944	RETAINING WALLS - TYPICAL SECTIONS - NB02-L
945-947	RETAINING WALLS - PLAN AND PROFILE - NB02-R
948	RETAINING WALLS - TYPICAL SECTIONS - NB02-R
949	RETAINING WALLS - PLAN AND PROFILE - NB03-A
950	RETAINING WALLS - TYPICAL SECTIONS - NB03-A
951	RETAINING WALLS - PLAN AND PROFILE - NB03-L
952	RETAINING WALLS - TYPICAL SECTIONS - NB03-L
953-956	RETAINING WALLS - PLAN AND PROFILE - NB03-R
957	RETAINING WALLS - TYPICAL SECTIONS - NB03-R
958-959	RETAINING WALLS - PLAN AND PROFILE - NB04
960	RETAINING WALLS - TYPICAL SECTIONS - NB04
961-962	RETAINING WALL - STRUCTURAL LAYOUT - NB04
963	RETAINING WALLS - PLAN AND PROFILE - NB05-A
964	RETAINING WALLS - TYPICAL SECTIONS - NB05-A
965-967	RETAINING WALLS - PLAN AND PROFILE - NB05-L
968	RETAINING WALLS - TYPICAL SECTIONS - NB05-L
969-971	RETAINING WALLS - PLAN AND PROFILE - NB05-R
972	RETAINING WALLS - TYPICAL SECTIONS - NB05-R
973	RETAINING WALLS - PLAN AND PROFILE - NB06-A
974	RETAINING WALLS - TYPICAL SECTIONS - NB06-A
975-978	RETAINING WALLS - PLAN AND PROFILE - NB06-L
979	RETAINING WALLS - TYPICAL SECTIONS - NB06-L
980-983	RETAINING WALLS - PLAN AND PROFILE - NB06-R
984	RETAINING WALLS - TYPICAL SECTIONS - NB06-R
985	RETAINING WALLS - PLAN AND PROFILE - NB07-A2
986	RETAINING WALLS - TYPICAL SECTIONS - NB07-A2
987-988	RETAINING WALLS - PLAN AND PROFILE - NB07-L
989	RETAINING WALLS - TYPICAL SECTIONS - NB07-L
990	RETAINING WALLS - PLAN AND PROFILE - NB08-A
991	RETAINING WALLS - TYPICAL SECTIONS - NB08-A
992-995	RETAINING WALLS - PLAN AND PROFILE - NB08-L
996	RETAINING WALLS - TYPICAL SECTIONS - NB08-L
997-999	RETAINING WALLS - PLAN AND PROFILE - NB09
1000	RETAINING WALLS - TYPICAL SECTIONS - NB09
1001-1004	RETAINING WALLS - PLAN AND PROFILE - NB10
1005	RETAINING WALLS - TYPICAL SECTIONS - NB10
1006	RETAINING WALLS - PLAN AND PROFILE - SB01-A
1007	RETAINING WALLS - TYPICAL SECTIONS - SB01-A
1008-1010	RETAINING WALLS - PLAN AND PROFILE - SB01-L
1011	RETAINING WALLS - TYPICAL SECTIONS - SB01-L
1012-1014	RETAINING WALLS - PLAN AND PROFILE - SB01-R
1015	RETAINING WALLS - TYPICAL SECTIONS - SB01-R
1016	RETAINING WALLS - PLAN AND PROFILE - SB02-A
1017	RETAINING WALLS - TYPICAL SECTIONS - SB02-A
1018-1020	RETAINING WALLS - PLAN AND PROFILE - SB02-L
1021	RETAINING WALLS - TYPICAL SECTIONS - SB02-L
1022	RETAINING WALLS - PLAN AND PROFILE - SB02-R
1023	RETAINING WALLS - TYPICAL SECTIONS - SB02-R
1024-1027	RETAINING WALLS - PLAN AND PROFILE - SB03
1028	RETAINING WALLS - TYPICAL SECTIONS - SB03
1029-1032	RETAINING WALL - STRUCTURAL LAYOUT - SB03
1033	RETAINING WALLS - PLAN AND PROFILE - SB04-A
1034	RETAINING WALLS - TYPICAL SECTIONS - SB04-A
1035-1037	RETAINING WALLS - PLAN AND PROFILE - SB04-L
1038	RETAINING WALLS - TYPICAL SECTIONS - SB04-L
1039-1042	RETAINING WALLS - PLAN AND PROFILE - SB04-R
1043	RETAINING WALLS - TYPICAL SECTIONS - SB04-R
1044	RETAINING WALLS - PLAN AND PROFILE - SB05-A
1045	RETAINING WALLS - TYPICAL SECTIONS - SB05-A
1046-1048	RETAINING WALLS - PLAN AND PROFILE - SB05-L
1049	RETAINING WALLS - TYPICAL SECTIONS - SB05-L
1050-1052	RETAINING WALLS - PLAN AND PROFILE - SB05-R
1053	RETAINING WALLS - TYPICAL SECTIONS - SB05-R
1054	RETAINING WALLS - PLAN AND PROFILE - SB06-A2
1055	RETAINING WALLS - TYPICAL SECTIONS - SB06-A2
1056-1057	RETAINING WALLS - PLAN AND PROFILE - SB06-R
1058	RETAINING WALLS - TYPICAL SECTIONS - SB06-R
1059	RETAINING WALLS - PLAN AND PROFILE - SB07-A
1060	RETAINING WALLS - TYPICAL SECTIONS - SB07-A
1061-1064	RETAINING WALLS - PLAN AND PROFILE - SB07-R
1065	RETAINING WALLS - TYPICAL SECTIONS - SB07-R
1066-1068	RETAINING WALLS - PLAN AND PROFILE - SB08
1069	RETAINING WALLS - TYPICAL SECTIONS - SB08
1070	RETAINING WALLS - PLAN AND PROFILE - SB09
1071	RETAINING WALLS - TYPICAL SECTIONS - SB09
1072-1073	RETAINING WALLS - MISCELLANEOUS DETAILS
1073A	RETAINING WALLS - WALL FINISH DETAILS

SHEET NO.	DESCRIPTION

VOLUME III (CONT'D)

IV. RETAINING WALL DETAILS

1073B	RETAINING WALLS - UNDERDRAIN DETAILS
1074-1076	RETAINING WALLS - GEOTECHNICAL RECOMMENDATIONS
1077-1080	RETAINING WALLS - SOIL NAIL DETAILS
1081-1085	RETAINING WALLS - DRILLED SHAFT DETAILS
1086-1087	RETAINING WALLS - MISCELLANEOUS STRUCTURAL DETAILS
1088-1101	BORING PLAN
1102-1124, 1124A-1124Q	BORING LOGS

STANDARDS

1125	*RW(EM)
1126	*RW(BTR)
1127	*RW(MSE)(MOD)
1128	*RW(TRF)
1129	*RW 1(L)C (MOD)
1130	*RW2

VOLUME IV

V. DRAINAGE DETAILS

1131	TITLE SHEET
1132-1136	INDEX OF SHEETS
1137	OVERALL DRAINAGE AREA MAP - BIG FOSSIL CREEK, STREAM BFC-2, STREAM BFC-2A, TRIBUTARY TO STREAM BFC-2A
1138	DRAINAGE AREA MAP CULVERT STA. 1547+54.76 AND STA. 1561+34.47
1139-1140	HYDRAULIC DATA SHEET - TRIB TO STREAM BFC-2A
1141-1144	HYDRAULIC DATA SHEET - STREAM BFC-2
1145-1152	HYDRAULIC DATA SHEET - BIG FOSSIL CREEK
1153	HYDRAULIC DATA SHEET - CULVERT 3
1154	HYDRAULIC DATA SHEET - CULVERT 4
1155	CULVERT 1 LAYOUT - TRIB TO STREAM BFC-2A
1156-1159	CULVERT 2 LAYOUT - STREAM BFC-2
1160	CULVERT 3 LAYOUT - 35W ML STA. 1547+54.36
1161-1162	CULVERT 4 LAYOUT - 35W ML STA. 1561+34.47
1163	CULVERT 5 LAYOUT - 35W ML STA. 1602+26.16
1164	HORIZONTAL ALIGNMENT DATA - DRAINAGE CHANNELS
1165-1166	CULVERT 1 CHANNEL LAYOUT - TRIB TO STREAM BFC-2A
1167-1170	CULVERT 2 CHANNEL LAYOUT - STREAM BFC-2
1171-1173	DETENTION POND LAYOUT & DETAILS
1174-1175	CULVERT 3 - TEMPORARY SPECIAL SHORING
1176-1185	INTERIOR DRAINAGE AREA MAP
1186-1188	DRAINAGE COMPUTATIONS - RUNOFF COMPUTATIONS
1189-1191	DRAINAGE COMPUTATIONS - ON-GRADE INLET COMPUTATIONS
1192-1195	DRAINAGE COMPUTATIONS - SAG INLET COMPUTATIONS
1196-1204	DRAINAGE COMPUTATIONS - CONVEYANCE COMPUTATIONS
1205-1232	DRAINAGE PLAN & PROFILE - IH 35W MANAGED LANES
1233-1248	DRAINAGE PLAN & PROFILE - IH 35W GENERAL PURPOSE LANES
1249-1256	DRAINAGE PLAN & PROFILE - NBFR
1257-1265	DRAINAGE PLAN & PROFILE - SBFR
1266-1267	DRAINAGE PLAN & PROFILE - 35S-287W DIRECT CONNECTOR
1268-1269	DRAINAGE PLAN & PROFILE - US 287
1270	DRAINAGE PLAN & PROFILE - WESTERN CENTER BLVD
1271-1282	DRAINAGE PROFILES - LATERALS
1283	DRAINAGE DETAILS - MISCELLANEOUS DRAINAGE DETAILS
1284-1285	MECHANICALLY STABILIZED EARTH WALL PIPE BACKFILL DIAGRAM

STANDARDS

1286	**SCC-MD
1287	**SCC-7
1288	**SCP-MD
1289	**SCP-7
1290	**SCP-8
1291	**MC-MD
1292	**MC-6-16
1293	**BCS
1294	**PW
1295	**CH-PW-S (SPL)
1296	**CI(1)-02(FW)
1297	**DI-1-02 (FW)
1298-1299	**GI-1-02 (FW)
1300	**MH-1-02 (FW)
1301	**MH-M
1302	**SET (1) (FW)
1303	**SET (2) (FW)
1304	**SETP-PD

SHEET NO.	DESCRIPTION

VOLUME IV (CONT'D)

STANDARDS

1306-1307	**BD-3 (MOD)
1308	**BD-1 (MOD)
1309	**CH-PW-O
1310	**CH-PW-S
1311	**SCP-3
1312	**SCP-4
1313	**JB-1-02 (FW)
1314-1315	**IL-H-L
1315A-1315B	**SETB-CD
1315C-1315D.	**SETB-PD

VI. UTILITIES

1316-1338	EXISTING UTILITY LAYOUTS
1339	WATER GENERAL NOTES
1340	WASTEWATER GENERAL NOTES
1341	PROJECT SPECIFIC NOTES
1342	WASTEWATER BYPASS PUMPING PLAN
1343	SHUTDOWN AND SEQUENCING NOTES
1344-1345	EXISTING WATER LINE AND ISOLATION VALVE LOCATION MAP
1346	EXISTING WASTEWATER LINE LOCATION MAP
1347	PROPOSED WATER LINE LOCATION MAP
1348	PROPOSED WASTEWATER LINE LOCATION MAP
1349	CONTROL POINT LOCATIONS FOR PROPOSED WATER AND WASTEWATER LINES
1350	EXISTING WATER LINES TO BE ABANDONED
1351	EXISTING WASTEWATER LINES TO BE ABANDONED
1352-1353	OVERALL LOCATION MAP SHOWING PERMANENT AND TEMPORARY CONSTRUCTION EASEMENTS AND PERMITS
1354-1356	PROPOSED WATER LINE A
1357-1358	PROPOSED WATER LINE B
1359	PROPOSED WATER LINE C
1360-1362	PROPOSED WASTEWATER LINE A
1363	PROPOSED WASTEWATER LINE B
1364-1372	WATER LINE DETAILS
1373-1379	WASTEWATER LINE DETAILS
1380	PAVEMENT DETAILS

STATE OF TEXAS
KURT W. AUNGST
90848
LICENSED
PROFESSIONAL ENGINEER

* THE STANDARD SHEETS SPECIFICALLY IDENTIFIED ABOVE HAVE BEEN SELECTED BY ME OR UNDER MY RESPONSIBLE SUPERVISION AS BEING APPLICABLE TO THIS PROJECT.

KURT W. AUNGST, P.E. , P.E. 8/22/12 DATE

STATE OF TEXAS
M. N. MOZAFFAR
85191
LICENSED
PROFESSIONAL ENGINEER

** THE STANDARD SHEETS SPECIFICALLY IDENTIFIED ABOVE HAVE BEEN SELECTED BY ME OR UNDER MY RESPONSIBLE SUPERVISION AS BEING APPLICABLE TO THIS PROJECT.

M. N. MOZAFFAR, P.E. , P.E. 8/22/2012 DATE

KENNEDY CONSULTING
TBPE REGISTRATION NO. F-926

I. S. ENGINEERS, LLC
TBPE REG. # F-11657

Texas Department of Transportation
© 2012

IH 35W FROM NORTH TARRANT PKWY TO IH 820

INDEX OF SHEETS

SHEET 2 OF 5

DESIGN KCI	FED.RD. DIV.NO.	FEDERAL AID PROJECT NO.		HIGHWAY NO.
GRAPHICS KCI	6	(SEE TITLE SHEET)		IH 35W
CHECK KCI	STATE	DISTRICT	COUNTY	SHEET NO.
	TEXAS	FTW	TARRANT	3
CHECK KCI	CONTROL	SECTION	JOB	
	0014	16	255, ETC.	

SHEET NO.	DESCRIPTION

VOLUME IV (CONT'D)

VI. UTILITIES

1381-1382	TRAFFIC CONTROL PLANS PHASE 1
1383-1384	TRAFFIC CONTROL PLANS PHASE 2
1385-1388	TRAFFIC CONTROL PLANS PHASE 3
1389	TRAFFIC CONTROL PLANS SANITARY SEWER PHASE 1
1390-1391	EROSION CONTROL
1392	EROSION CONTROL DETAILS

VOLUME V

VII. BRIDGES

1393	TITLE SHEET
1394-1398	INDEX OF SHEETS
1399-1401	BRIDGE LAYOUT - NB IH 35W TO WB US 287
1402	FOUNDATION LAYOUT
1403	EST. QUANTITIES AND BEARING SEAT ELEV.
1404-1405	ABUTMENT NO. 1
1406-1407	ABUTMENT NO. 6
1408-1410	INTERIOR BENT NO. 2 & 5
1411-1412	INTERIOR BENT NO. 3
1413-1414	INTERIOR BENT NO. 4
1415	COLUMN DETAILS TYPE A
1416	COLUMN DETAILS TYPE B
1417	FOOTING DETAILS TYPE A
1418	FOOTING DETAILS TYPE B
1419	GIRDER LAYOUT (SPAN 1)
1420-1421	120.00' PRESTRESSED CONCRETE I-GIRDER UNIT
1422-1427	493.00' CONTINUOUS PLATE GIRDER UNIT
1428	GIRDER LAYOUT (SPAN 5)
1429-1430	112.00' PRESTRESSED CONCRETE I-GIRDER UNIT
1431-1434	BRIDGE LAYOUT - NB IH 35W ML TO WB US 287
1435-1436	FOUNDATION LAYOUT
1437	EST. QUANTITIES AND BEARING SEAT ELEV.
1438-1439	ABUTMENT NO. 1
1440-1441	ABUTMENT NO. 9
1442-1445	INTERIOR BENT NO. 2, 7 AND 8
1446-1448	INTERIOR BENT NO. 3 & 6
1449-1450	INTERIOR BENT NO. 4
1451-1453	INTERIOR BENT NO. 5
1454	COLUMN DETAILS TYPE A
1455	COLUMN DETAILS TYPE B
1456	COLUMN DETAILS TYPE C
1457	COLUMN DETAILS TYPE D
1458	FOOTING DETAILS TYPE A
1459	FOOTING DETAILS TYPE B
1460	FOOTING DETAILS TYPE C
1461	FOOTING DETAILS TYPE D
1462	GIRDER LAYOUT (SPANS 1 - 2)
1463-1464	236.00' PRESTRESSED CONCRETE I-GIRDER UNIT
1465-1470	440.00' CONTINUOUS PLATE GIRDER UNIT
1471-1476	172.00' PLATE GIRDER UNIT
1477	GIRDER LAYOUT (SPANS 6 - 8)
1478-1479	381.00' PRESTRESSED CONCRETE I-GIRDER UNIT
1480-1482	BRIDGE LAYOUT - EB US 287 TO SB IH 35W ML
1483	FOUNDATION LAYOUT
1484	EST. QUANTITIES AND BEARING SEAT ELEV.
1485-1486	ABUTMENT NO. 1
1487-1488	ABUTMENT NO. 8
1489-1490	INTERIOR BENT NO. 2 & 3
1491-1493	INTERIOR BENT NO. 4
1494-1495	INTERIOR BENT NO. 5
1496-1497	INTERIOR BENT NO. 6
1498-1499	INTERIOR BENT NO. 7
1500	COLUMN DETAILS - TYPE A
1501	COLUMN DETAILS - TYPE B
1502	COLUMN DETAILS - TYPE C
1503	COLUMN DETAILS - TYPE D
1504	FOOTING DETAILS - TYPE A
1505	FOOTING DETAILS - TYPE B
1506	FOOTING DETAILS - TYPE C
1507	FOOTING DETAILS - TYPE D
1508-1510	BRIDGE DRAIN DETAILS
1511	GIRDER LAYOUT (SPANS 1 - 3)
1512-1513	390.00' PRESTRESSED CONCRETE I-GIRDER UNIT
1514-1520	220.00' CONTINUOUS PLATE GIRDER UNIT
1521	GIRDER LAYOUT (SPANS 5 - 7)
1522-1523	305.00' PRESTRESSED CONCRETE I-GIRDER UNIT
1524	BRIDGE LAYOUT - BASSWOOD BLVD NS TURNAROUND - IH 35W UNDERPASS

SHEET NO.	DESCRIPTION

VOLUME V (CONT'D)

VII. BRIDGES

1525	ESTIMATED QUANTITIES AND BEARING SEAT ELEV.
1526	FOUNDATION LAYOUT
1527-1528	ABUTMENT NO. 1
1529-1530	ABUTMENT NO. 5
1531	INTERIOR BENT NO. 2
1532	INTERIOR BENT NO. 3
1533	INTERIOR BENT NO. 4
1534	GIRDER LAYOUT (SPANS 1 & 2)
1535-1536	201.00' PRESTRESSED CONCRETE I-GIRDER UNIT (SPANS 1 & 2)
1537	GIRDER LAYOUT (SPANS 3 & 4)
1538-1539	201.00' PRESTRESSED CONCRETE I-GIRDER UNIT (SPANS 3 & 4)
1540	APPROACH SLAB DETAILS
1541	BRIDGE END DETAILS
1542	BRIDGE LAYOUT - BASSWOOD BLVD SN TURNAROUND - IH 35W UNDERPASS
1543	ESTIMATED QUANTITIES AND BEARING SEAT ELEV.
1544	FOUNDATION LAYOUT
1545-1546	ABUTMENT NO. 1
1547-1548	ABUTMENT NO. 5
1549	INTERIOR BENT NO. 2
1550	INTERIOR BENT NO. 3
1551	INTERIOR BENT NO. 4
1552	GIRDER LAYOUT (SPANS 1 & 2)
1553-1554	201.00' PRESTRESSED CONCRETE I-GIRDER UNIT (SPANS 1 & 2)
1555	GIRDER LAYOUT (SPANS 3 & 4)
1556-1557	201.00' PRESTRESSED CONCRETE I-GIRDER UNIT (SPANS 3 & 4)
1558	APPROACH SLAB DETAILS
1559	BRIDGE END DETAILS
1560-1562	BRIDGE LAYOUT - SB IH35W ENTRANCE RAMP TO MANAGED LANES
1563	EST. QUANTITIES AND BEARING SEAT ELEV.
1564	FOUNDATION LAYOUT
1565	FOOTING DETAILS - BENTS 2, 3, 7 & 8
1566	FOOTING DETAILS - BENTS 4 & 6
1567	FOOTING DETAILS - BENT 5
1568	ABUTMENT NO. 1
1569	ABUTMENT NO. 9
1570-1571	INTERIOR BENT NO. 2
1572-1573	INTERIOR BENT NO. 3
1574-1575	INTERIOR BENT NO. 4
1576-1580	INTERIOR BENT NO. 5
1581-1582	INTERIOR BENT NO. 6
1583-1584	INTERIOR BENT NO. 7
1585-1586	INTERIOR BENT NO. 8
1587-1588	GIRDER LAYOUT
1589-1594	353.00' PLATE GIRDER UNIT
1595-1596	348.00' PRESTR. CONCRETE I-GIRDER UNIT
1597-1598	354.00' PRESTR. CONCRETE I-GIRDER UNIT
1599	BRIDGE DRAIN DETAILS
1600-1603	BRIDGE LAYOUT - NB IH35W EXIT RAMP FROM MANAGED LANES
1604	EST. QUANTITIES AND BEARING SEAT ELEV.
1605-1606	FOUNDATION LAYOUT
1607	FOOTING DETAILS - BENTS 2-4, 9-10
1608	FOOTING DETAILS - BENTS 5, 6 & 8
1609	FOOTING DETAILS - BENT 7
1610	ABUTMENT NO. 1
1611	ABUTMENT NO. 11
1612-1613	INTERIOR BENTS NO. 2 - 4
1614-1615	INTERIOR BENT NO. 5
1616-1617	INTERIOR BENT NO. 6
1618-1622	INTERIOR BENT NO. 7
1623-1624	INTERIOR BENT NO. 8
1625-1626	INTERIOR BENT NO. 9
1627-1628	INTERIOR BENT NO. 10
1629-1630	GIRDER LAYOUT
1631-1637	564.00' PLATE GIRDER UNIT
1638-1639	472.00' PRESTRESSED CONCRETE I-GIRDER UNIT
1640-1641	354.00' PRESTRESSED CONCRETE I-GIRDER UNIT
1642-1644	BRIDGE DRAIN DETAILS
1645	AS-BUILT BRIDGE LAYOUT - RAMP D OVER RAMP C
1646	ESTIMATED QUANTITIES
1647	AS-BUILT ABUTMENT
1648	AS-BUILT BRIDGE LAYOUT - RAMP A OVER RAMP B
1649	ESTIMATED QUANTITIES
1650	AS-BUILT ABUTMENT
1651	BRIDGE LAYOUT - NB FRONTAGE RD - OVER BIG FOSSIL CK
1652	PHASING DETAILS
1653	FOUNDATION LAYOUT
1654	EST. QUANTITIES AND BEARING SEAT ELEV.
1655-1656	ABUTMENT NO. 1
1657-1658	ABUTMENT NO. 4

STATE OF TEXAS
KURT W. AUNGST
90848
LICENSED
PROFESSIONAL ENGINEER

* THE STANDARD SHEETS SPECIFICALLY IDENTIFIED ABOVE HAVE BEEN SELECTED BY ME OR UNDER MY RESPONSIBLE SUPERVISION AS BEING APPLICABLE TO THIS PROJECT.

KURT W. AUNGST, P.E. , P.E. 7/13/12 DATE

STATE OF TEXAS
M. N. MOZAFFAR
85191
LICENSED
PROFESSIONAL ENGINEER

** THE STANDARD SHEETS SPECIFICALLY IDENTIFIED ABOVE HAVE BEEN SELECTED BY ME OR UNDER MY RESPONSIBLE SUPERVISION AS BEING APPLICABLE TO THIS PROJECT.

M. N. MOZAFFAR, P.E. , P.E. 7/13/12 DATE

KENNEDY CONSULTING
TBPE REGISTRATION NO. F-926

I. S. ENGINEERS, LLC
TBPE REG. # F-11657

Texas Department of Transportation
© 2012

IH 35W FROM NORTH TARRANT PKWY TO IH 820

INDEX OF SHEETS

SHEET 3 OF 5

DESIGN	FED. RD. DIV. NO.	FEDERAL AID PROJECT NO.		HIGHWAY NO.
KCI	6	(SEE TITLE SHEET)		IH 35W
GRAPHICS KCI	STATE	DISTRICT	COUNTY	SHEET NO.
CHECK KCI	TEXAS	FTW	TARRANT	4
CHECK KCI	CONTROL 0014	SECTION 16	JOB 255, ETC.	

FILENAME: S3BINDEX13.dgn

DRAWING DATE: 7/13/2012

SHEET NO.	DESCRIPTION

VOLUME V (CONT'D)

VII. BRIDGES

1659-1660	INTERIOR BENT NO. 2 & 3
1661	GIRDER LAYOUT (SPANS 1 - 3)
1662-1663	209.50' PRESTRESSED CONCRETE I-GIRDER UNIT
1664	BRIDGE LAYOUT - SB FRONTAGE RD - OVER BIG FOSSIL CK
1665	PHASING DETAILS
1666	FOUNDATION LAYOUT
1667	EST. QUANTITIES AND BEARING SEAT ELEV.
1668-1669	ABUTMENT NO. 1
1670-1671	ABUTMENT NO. 4
1672-1673	INTERIOR BENT NO. 2
1674-1675	INTERIOR BENT NO. 3
1676	GIRDER LAYOUT (SPANS 1 - 3)
1677-1678	211.50' PRESTRESSED CONCRETE I-GIRDER UNIT
1679	BRIDGE LAYOUT - NB IH 35W - OVER BIG FOSSIL CK
1680-1681	PHASING DETAILS
1682-1683	AS-BUILT - BRIDGE LAYOUT - BIG FOSSIL CREEK BRIDGE - NORTHBOUND
1684	FOUNDATION LAYOUT
1685	EST. QUANTITIES AND BEARING SEAT ELEV.
1686-1688	ABUTMENT NO. 1
1689-1691	ABUTMENT NO. 4
1692-1694	INTERIOR BENT NO. 2 AND 3
1695	GIRDER LAYOUT SPANS 1 - 3
1696-1698	213.15' PRESTRESSED CONCRETE I-GIRDER UNIT
1699-1700	APPROACH SLAB DETAILS
1701	BRIDGE LAYOUT - SB IH 35W - OVER BIG FOSSIL CK
1702-1703	PHASING DETAILS
1704-1705	AS-BUILT - BRIDGE LAYOUT - BIG FOSSIL CREEK BRIDGE - SOUTHBOUND
1706	FOUNDATION LAYOUT
1707	EST. QUANTITIES AND BEARING SEAT ELEV.
1708-1709	ABUTMENT NO. 1
1710-1711	ABUTMENT NO. 4
1712	INTERIOR BENT NO. 2
1713	INTERIOR BENT NO. 3
1714	GIRDER LAYOUT (SPANS 1 - 3)
1715-1716	213.15' PRESTRESSED CONCRETE I-GIRDER UNIT
1717-1718	APPROACH SLAB DETAILS
1719	BRIDGE LAYOUT - SB IH35W ENTR RAMP TO GP - OVER BIG FOSSIL CREEK
1720	BRIDGE TYPICAL SECTION
1721	EST. QUANTITIES AND BEARING SEAT ELEV.
1722	FOUNDATION LAYOUT
1723	ABUTMENT NO. 1
1724	ABUTMENT NO. 4
1725	MISCELLANEOUS ABUTMENT DETAILS
1726	INTERIOR BENTS NO. 2 & 3
1727	GIRDER LAYOUT (SPANS 1 - 3)
1728-1729	218.65' PRESTRESSED CONCRETE I-GIRDER UNIT
1730	BRIDGE LAYOUT - NB IH35W EXIT RAMP FROM GP - OVER BIG FOSSIL CREEK
1731	BRIDGE TYPICAL SECTION
1732	EST. QUANTITIES AND BEARING SEAT ELEV.
1733	FOUNDATION LAYOUT
1734	ABUTMENT NO. 1
1735	ABUTMENT NO. 4
1736	MISCELLANEOUS ABUTMENT DETAILS
1737	INTERIOR BENTS NO. 2 & 3
1738	GIRDER LAYOUT (SPANS 1 - 3)
1739-1740	246.90' PRESTRESSED CONCRETE I-GIRDER UNIT
1741	BRIDGE LAYOUT - NB IH 35W GP, ML AND EX R - OVER WESTERN CENTER BLVD
1742	PHASING DETAILS
1743	AS-BUILT BRIDGE LAYOUT
1744	AS-BUILT BRIDGE LAYOUT TYP SECTION
1745	FOUNDATION LAYOUT
1746-1747	ABUTMENT 1 DETAILS
1748-1749	ABUTMENT 4 DETAILS
1750	INTERIOR BENT NO. 2
1751	INTERIOR BENT NO. 3
1752	GIRDER LAYOUT
1753-1754	267.30' PRESTRESSED CONCRETE I-GIRDER UNIT
1755-1756	ABUTMENT 1 DETAILS
1757-1758	ABUTMENT 4 DETAILS
1759	INTERIOR BENT NO. 2
1760	INTERIOR BENT NO. 3
1761	GIRDER LAYOUT
1762-1763	267.30' PRESTRESSED CONCRETE I-GIRDER UNIT
1764	BRIDGE LAYOUT - SB IH 35W GP, ML AND ENT R - OVER WESTERN CENTER BLVD
1765	PHASING DETAILS
1766	AS-BUILT BRIDGE LAYOUT
1767	AS-BUILT BRIDGE LAYOUT TYP SECTION
1768	FOUNDATION LAYOUT
1769-1770	ABUTMENT 1 DETAILS
1771-1772	ABUTMENT 4 DETAILS

SHEET NO.	DESCRIPTION

VOLUME V (CONT'D)

VII. BRIDGES

1773	INTERIOR BENT NO. 2
1774	INTERIOR BENT NO. 3
1775	GIRDER LAYOUT
1776-1777	267.30' PRESTRESSED CONCRETE I-GIRDER UNIT
1778	ESTIMATED QUANTITIES

STANDARDS

1779	**BAS-A
1780	**BAS-C
1781-1782	**BMCS
1783-1784	**BRSM
1785-1786	**BRSM (MOD)
1787	**BS-EJCP
1788-1790	**C221
1791-1794	**C402 (MOD)
1795	**CRR
1796	**BAT-CTFB-08(FW)
1797	**CSB(3)-10
1798-1799	**FD
1800-1801	**IGD
1802-1804	**IGEB
1805-1807	**IGEB (MOD)
1808	**IGMS
1809-1814	**IGND
1815	**IGTS
1816	**MEBR(C)
1817	**MEBR(S)
1818-1821	**PCP
1822	**PCP-FAB
1823-1824	**PMDF
1825	**SBMS
1826	**SBTS
1827-1828	**SEJ-A
1829-1831	**SGEB
1832-1834	**SGMD
1835-1836	**SSCB(2)-10
1837-1838	**SSTR
1839-1841	**T401

VOLUME VI

VIII. TRAFFIC ITEMS

1842	TITLE SHEET
1843-1847	INDEX OF SHEETS
1848	TRAFFIC SIGNAL PLANS - EXISTING CONDITIONS LAYOUT - SBFR AT BASSWOOD BLVD
1849	TRAFFIC SIGNAL PLANS - PROPOSED INTERSECTION LAYOUT
1850	TRAFFIC SIGNAL PLANS - SUMMARY CHARTS
1851	TRAFFIC SIGNAL PLANS - TERMINATION & PHASING
1852	TRAFFIC SIGNAL PLANS - SIGNS LAYOUT
1853	EXISTING CONDITIONS TRAFFIC SIGNAL LAYOUT - NBFR AT BASSWOOD BLVD
1854	TRAFFIC SIGNAL PLANS - PROPOSED INTERSECTION LAYOUT
1855	TRAFFIC SIGNAL PLANS - SUMMARY CHARTS
1856	TRAFFIC SIGNAL PLANS - TERMINATION & PHASING
1857	TRAFFIC SIGNAL PLANS - SIGNS LAYOUT
1858	EXISTING CONDITIONS TRAFFIC SIGNAL LAYOUT - SBFR AT WESTERN CENTER BLVD
1859	TRAFFIC SIGNAL PLANS - TEMPORARY INTERSECTION LAYOUT
1860	TRAFFIC SIGNAL PLANS - TEMP SIGNAL SUMMARY CHARTS
1861	TRAFFIC SIGNAL PLANS - TEMP SIGNAL TERMINATION & PHASING
1862	TRAFFIC SIGNAL PLANS - TEMP SIGNAL SIGN LAYOUT
1863	TRAFFIC SIGNAL PLANS - PROPOSED INTERSECTION LAYOUT
1864	TRAFFIC SIGNAL PLANS - SUMMARY CHARTS
1865	TRAFFIC SIGNAL PLANS - TERMINATION & PHASING
1866	TRAFFIC SIGNAL PLANS - SIGNS LAYOUT
1867	TRAFFIC SIGNAL PLANS - EXISTING CONDITIONS LAYOUT - NBFR AT WESTERN CENTER BLVD
1868	TRAFFIC SIGNAL PLANS - TEMPORARY INTERSECTION LAYOUT
1869	TRAFFIC SIGNAL PLANS - TEMP SIGNAL SUMMARY CHARTS
1870	TRAFFIC SIGNAL PLANS - TEMP SIGNAL TERMINATION & PHASING
1871	TRAFFIC SIGNAL PLANS - TEMP SIGNAL SIGNS LAYOUT
1872	TRAFFIC SIGNAL PLANS - PROPOSED INTERSECTION LAYOUT
1873	TRAFFIC SIGNAL PLANS - SUMMARY CHARTS

SHEET NO.	DESCRIPTION

VOLUME VI (CONT'D)

VIII. TRAFFIC ITEMS

1874	TRAFFIC SIGNAL PLANS - TERMINATION & PHASING
1875	TRAFFIC SIGNAL PLANS - SIGNS LAYOUT
1876	CITY OF FORT WORTH - FIGURE 4 MOVEMENT DIAGRAM
1877	TRAFFIC SIGNAL DETAILS - SIGNAL HEADS AND PED POLE DETAILS

STANDARDS

1878-1879	**SMA-80(1)-12 AND SMA-80(2)-12
1880	**LUM-A-12
1881	**CFA-12
1882-1883	**MA-C-12 AND MA-D-12
1884	**MA-DPD-12
1885	**TS-FD-12
1886-1887	**VDZ(1)-05(FTW) AND VDZ(2)-05(FTW)
1888	**AS-GNBOX
1889-1890	**TEMPORARY SIGNAL TYPICAL DETAIL SHEET
1891	**TYPE 170 CABINET INSTALLATION DETAILS
1892-1915	ILLUMINATION PLAN
1916	LUMINAIRE SUMMARY
1917	UNDERPASS CONDUIT SUMMARY
1918-1919	CONDUIT SUMMARY
1920	GROUND BOX SUMMARY
1921	ELECTRICAL SERVICE SUMMARY

STANDARDS

1922-1926	**ED(1)-03 THRU ED(5)-03
1927	**ED(6)-03(FTW)
1928-1929	**ED(7)-03 AND ED(8)-03
1930-1931	**RID(LUM1)-07 AND RID(LUM2)-07
1932	**RID(FND)-11
1933	**RID(UP)-07
1934	**RID(IF)-07
1935-1938	**RIP(1)-11 THRU RIP(4)-11
1939-1947	**HMID(1)-03 THRU HMID(9)-03
1948-1949	**HMIP(1)-98 AND HMIP(2)-98
1950-1951	**HMIF(1)-98 AND HMIF(2)-98

STATE OF TEXAS
KURT W. AUNGST
90848
LICENSED
PROFESSIONAL ENGINEER

* THE STANDARD SHEETS SPECIFICALLY IDENTIFIED ABOVE HAVE BEEN SELECTED BY ME OR UNDER MY RESPONSIBLE SUPERVISION AS BEING APPLICABLE TO THIS PROJECT.

KURT W. AUNGST, P.E. , P.E. 8/29/12 DATE

STATE OF TEXAS
M. N. MOZAFFAR
85191
LICENSED
PROFESSIONAL ENGINEER

** THE STANDARD SHEETS SPECIFICALLY IDENTIFIED ABOVE HAVE BEEN SELECTED BY ME OR UNDER MY RESPONSIBLE SUPERVISION AS BEING APPLICABLE TO THIS PROJECT.

M. N. MOZAFFAR, P.E. , P.E. 8/29/12 DATE

KCI KENNEDY CONSULTING
TBPE REGISTRATION NO. F-926

I. S. ENGINEERS, LLC
TBPE REG. # F-11657

Texas Department of Transportation
© 2012

IH 35W FROM NORTH TARRANT PKWY TO IH 820

INDEX OF SHEETS

SHEET 4 OF 5

DESIGN	FED.RD. DIV.NO.	FEDERAL AID PROJECT NO.		HIGHWAY NO.
KCI	6	(SEE TITLE SHEET)		IH 35W
GRAPHICS KCI	STATE	DISTRICT	COUNTY	SHEET NO.
CHECK KCI	TEXAS	FTW	TARRANT	5
CHECK KCI	CONTROL	SECTION	JOB	
	0014	16	255, ETC.	

FILENAME: S3BINDEX14.dgn

DRAWING DATE: 8/28/2012

SHEET NO.	DESCRIPTION

VOLUME VI (CONT'D)

VIII. TRAFFIC ITEMS

1952-1973	SIGN LAYOUTS
1974-2017	SIGN SUPPORT LAYOUTS
2018-2028	LARGE GUIDE SIGN DETAILS
2029-2030	SMALL SIGN DETAILS
2031	LARGE SIGNS SCHEDULE & QUANTITIES

STANDARDS

2032	*WV&IZ-96
2033-2034	*OSB-Z4I
2035-2036	*HOSB-Z4I
2037	*OSBC
2038-2039	*OSBT
2040	*OSB-FD
2041	*OSB-FD-SC
2042	*HCOSS-Z1-10
2043	*COSS AND OSB-SZ
2044	*COSS-Z3 AND Z3I-10
2045	*COSS-Z4 AND Z4I-10
2046-2047	*COSSD
2048	*COSSF
2049	*COSS-FD
2050	*SMD(GEN)-08
2051-2053	*SMD(SLIP-1)-08 THRU SMD(SLIP-3)-08
2054	*SMD(TWT)-08
2055	*SMD(FRP)-08
2056	*SMD(TY G)-08
2057-2060	*SMD(2-1)-08 THRU SMD(2-4)-08
2061	*SMD(2-6)-01
2062-2063	*SMD(8W1)-08 AND SMD(8W2)-08
2064-2068	*TSR(1)-08 THRU TSR(5)-08

2069-2092	PAVEMENT MARKINGS & DELINEATION

STANDARDS

2093	*D&OM(1)-10
2094-2097	*D&OM(2)-04 THRU D&OM(5)-04
2098	*D&OM(VIA)-04
2099-2102	*FPM(1)-12 THRU FPM(4)-12
2103-2106	*PM(1)-12 THRU PM(4)-12
2107	*BLPM-10
2108	*WZ(DERD)-03

2109-2133	ITS PLAN
2134	OMIT
2135-2137	ITS PLAN
2138	ITS DETAIL SHEET - CCTV COVERAGE MAP
2139-2162, 2162A, 2163-2167, 2167A, 2168-2176	ITS ELEVATION CROSS SECTIONS
2177-2189	ITS DETAIL SHEET
2190	TOLL LAYOUT - PROJECT SATELLITE BUILDING
2190A	CLF-10 (MOD)
2191-2194	ITS DETAIL SHEET
2195	TOLL LAYOUT - RAMP 35EX-MLS
2196-2198	TOLLING DETAILS
2199	TOLL LAYOUT - DC 287E-MLS
2200-2202	TOLLING DETAILS
2203	TOLL LAYOUT - RAMP BB-MLS
2204-2206	TOLLING DETAILS
2207	TOLL LAYOUT - MAINLANE
2208-2211	TOLLING DETAILS

IX. EROSION CONTROL

2212-2213	EPIC
2214	STORM WATER POLLUTION PREVENTION PLAN (SW3P)
2215-2237	EROSION CONTROL PLAN

STANDARDS

2238-2240	**EC(1)-09 THRU EC(3)-09

STATE OF TEXAS
KURT W. AUNGST
90848
LICENSED
PROFESSIONAL ENGINEER

* THE STANDARD SHEETS SPECIFICALLY IDENTIFIED ABOVE HAVE BEEN SELECTED BY ME OR UNDER MY RESPONSIBLE SUPERVISION AS BEING APPLICABLE TO THIS PROJECT.

KURT W. AUNGST, P.E. , P.E. 8/29/12 DATE

STATE OF TEXAS
M. N. MOZAFFAR
85191
LICENSED
PROFESSIONAL ENGINEER

** THE STANDARD SHEETS SPECIFICALLY IDENTIFIED ABOVE HAVE BEEN SELECTED BY ME OR UNDER MY RESPONSIBLE SUPERVISION AS BEING APPLICABLE TO THIS PROJECT.

M. N. MOZAFFAR, P.E. , P.E. 8/29/12 DATE

KENNEDY CONSULTING
TBPE REGISTRATION NO. F-926

I. S. ENGINEERS, LLC
TBPE REG. # F-11657

Texas Department of Transportation
© 2012

IH 35W FROM NORTH TARRANT PKWY TO IH 820

INDEX OF SHEETS

SHEET 5 OF 5

DESIGN	FED.RD. DIV.NO.	FEDERAL AID PROJECT NO.		HIGHWAY NO.
KCI	6	(SEE TITLE SHEET)		IH 35W
GRAPHICS KCI	STATE	DISTRICT	COUNTY	SHEET NO.
CHECK KCI	TEXAS	FTW	TARRANT	6
CHECK KCI	CONTROL 0014	SECTION 16	JOB 255, ETC.	

FILENAME: S3BINDEX15.dgn

DRAWING DATE: 8/29/2012

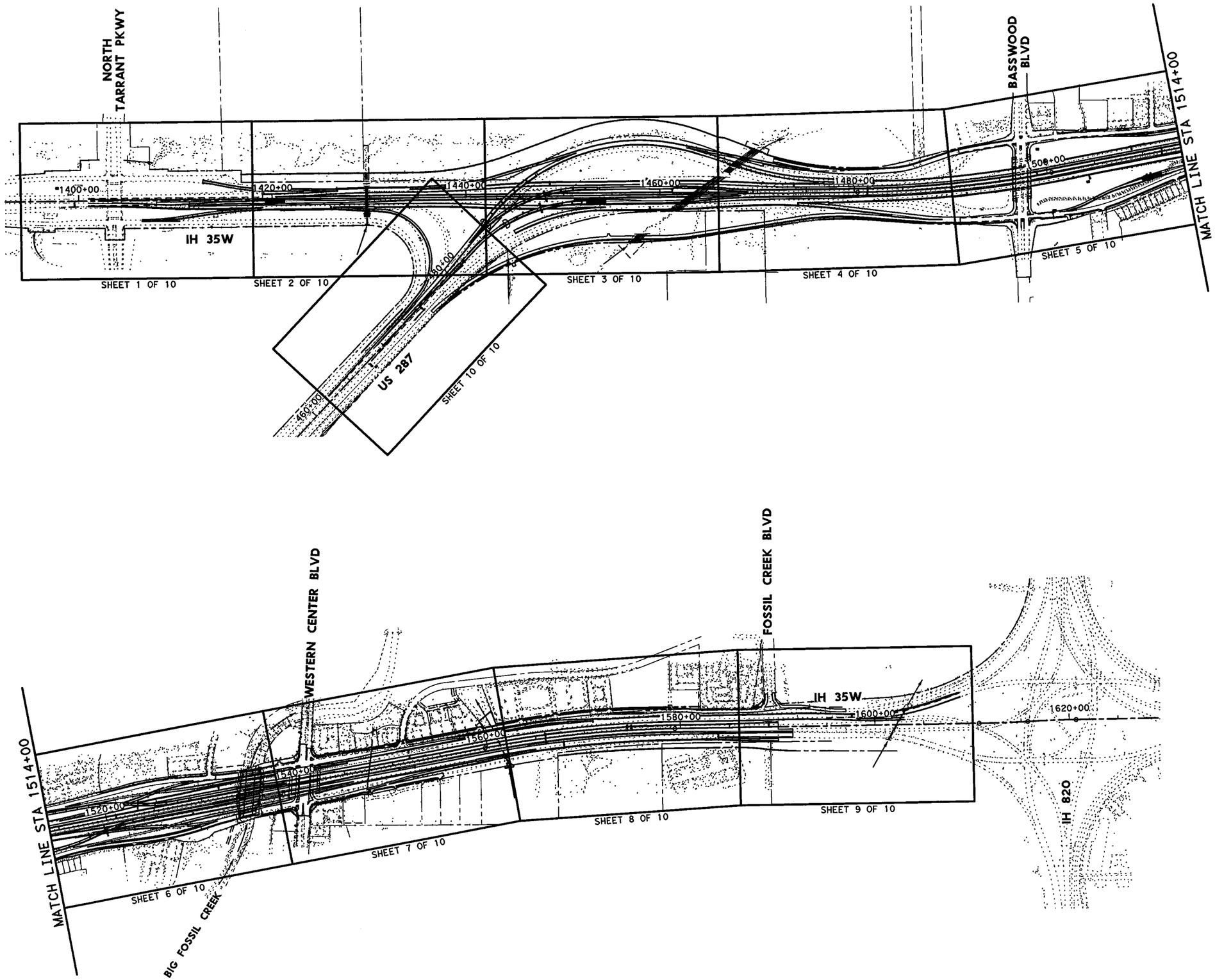

HORZ 0' 250' 500' 1000'

SCALE IN FEET

STATE OF TEXAS
KURT W. AUNGST
90848
LICENSED
PROFESSIONAL ENGINEER

7/31/12

KENNEDY CONSULTING
TBPE REGISTRATION NO. F-926

Texas Department of Transportation
© 2012

IH 35W FROM NORTH TARRANT PKWY TO IH 820

PROJECT LAYOUT
KEY MAP

SCALE: 1" = 1000'

SHEET 1 OF 1

DESIGN	FED. RD. DIV. NO.	FEDERAL AID PROJECT NO.		HIGHWAY NO.
KCI	6	(SEE TITLE SHEET)		IH 35W
GRAPHICS	STATE	DISTRICT	COUNTY	SHEET NO.
KCI	TEXAS	FTW	TARRANT	7
CHECK	CONTROL	SECTION	JOB	
KCI	0014	16	255, ETC.	
CHECK				
KCI				

FILENAME: S38PLKM.dgn

DRAWING DATE: 7/30/2012

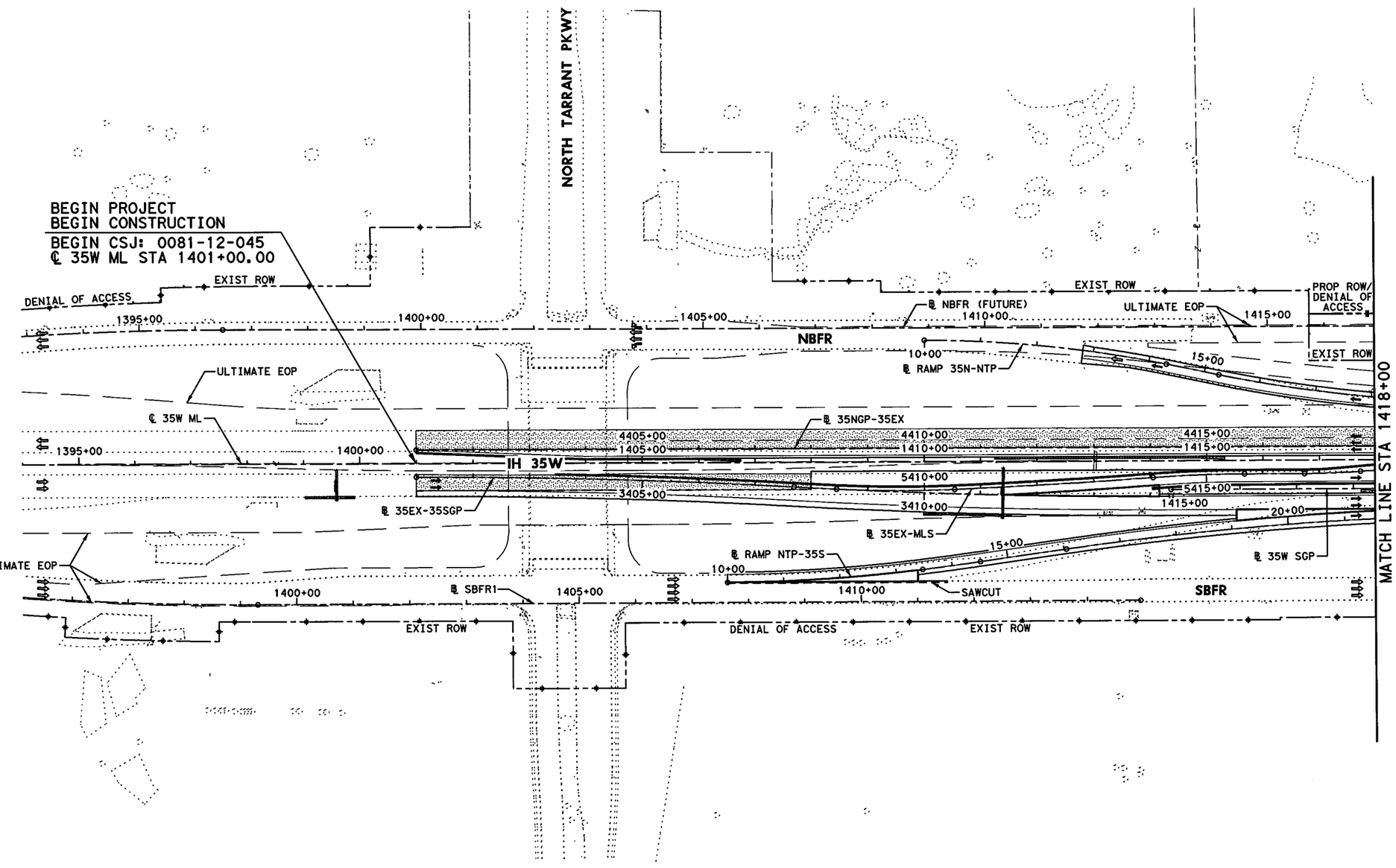

0' 50' 100' 200'
SCALE IN FEET

STATE OF TEXAS
KURT W. AUNGST
90848
LICENSED
PROFESSIONAL ENGINEER
7/31/12

KENNEDY CONSULTING
TBPE REGISTRATION NO. F-926

Texas Department of Transportation
© 2012

IH 35W FROM NORTH TARRANT PKWY TO IH 820

PROJECT LAYOUT
BEGIN PROJECT TO STA 1418+00

SCALE = 1" = 200' SHEET 1 OF 10

DESIGN	FED. RD. DIV. NO.	FEDERAL AID PROJECT NO.		HIGHWAY NO.
KCI	6	(SEE TITLE SHEET)		IH 35W
GRAPHICS	STATE	DISTRICT	COUNTY	SHEET NO.
KCI	TEXAS	FTW	TARRANT	8
CHECK	CONTROL	SECTION	JOB	
KCI	0014	16	255, ETC.	

FILENAME: S38PL01.dgn
DRAWING DATE: 7/31/2012

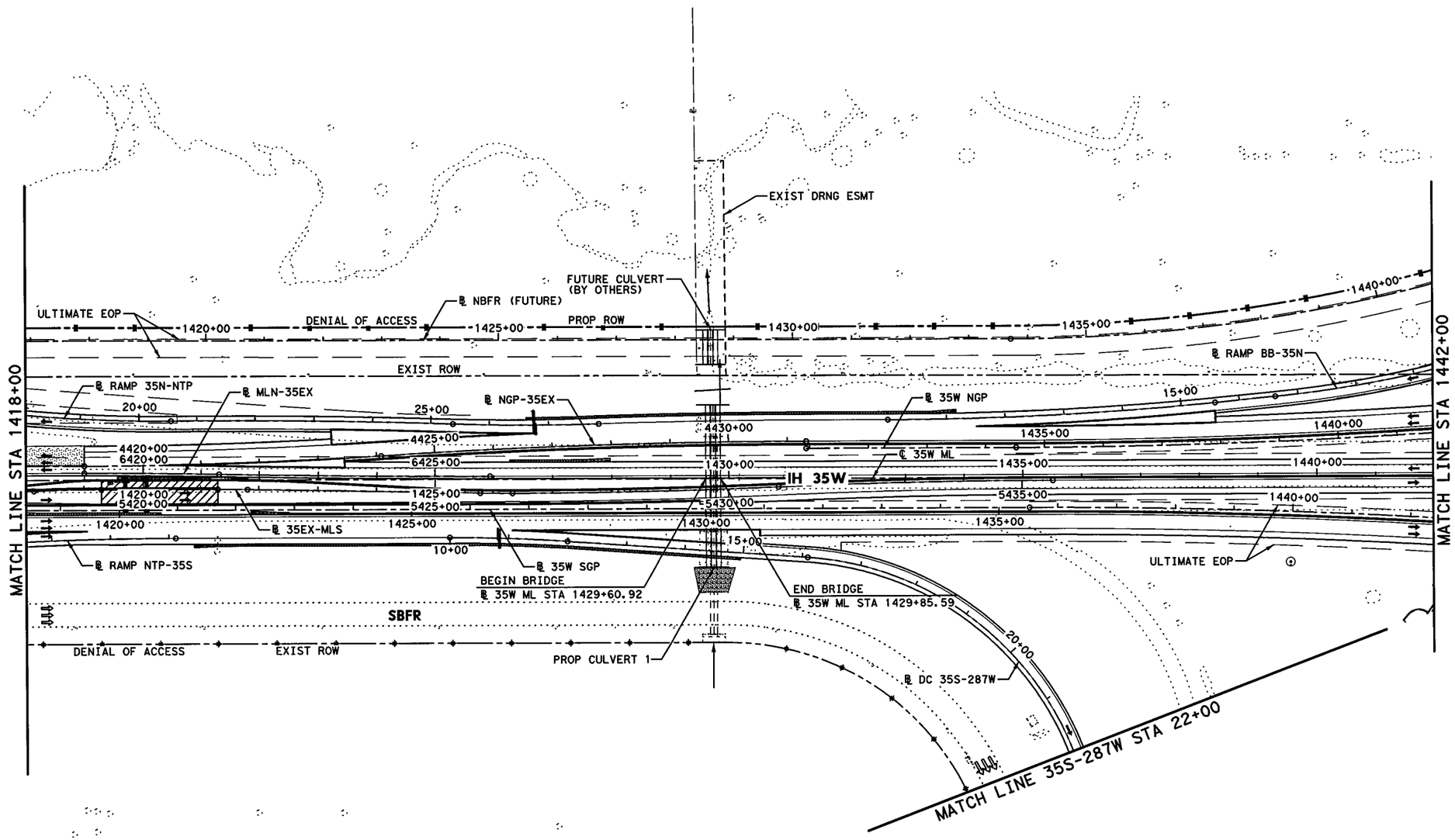

0' 50' 100' 200'

SCALE IN FEET

STATE OF TEXAS
KURT W. AUNGST
90848
LICENSED
PROFESSIONAL ENGINEER

7/31/12

KENNEDY CONSULTING
TBPE REGISTRATION NO. F-926

Texas Department of Transportation
© 2012

IH 35W FROM NORTH TARRANT PKWY TO IH 820

PROJECT LAYOUT
STA 1418+00 TO STA 1442+00

SCALE = 1" = 200'

SHEET 2 OF 10

DESIGN	FED. RD. DIV. NO.	FEDERAL AID PROJECT NO.		HIGHWAY NO.
KCI	6	(SEE TITLE SHEET)		IH 35W
GRAPHICS	STATE	DISTRICT	COUNTY	SHEET NO.
KCI	TEXAS	FTW	TARRANT	9
CHECK	CONTROL	SECTION	JOB	
KCI	0014	16	255, ETC.	

FILENAME: S3BPL02.dgn

DRAWING DATE: 7/30/2012

END CSJ: 0081-12-045
BEGIN CSJ: 0014-16-255
℄ 35W ML STA 1445+62.10

PROP ROW
DENIAL OF ACCESS
EXIST ROW
ULTIMATE EOP
℄ DC 35N-287W
℄ NBFR (FUTURE)
℄ RAMP BB-287W
END BRIDGE
℄ DC 35N-287W STA 56+32.00
BEGIN BRIDGE
35W ML STA 1463+17.24
END BRIDGE
℄ DC MLN-287W STA 61+62.00
RET WALL "NB01-A"
RET WALL "NB01-R"
RET WALL "NB02-R"
RET WALL "NB02-L"
RET WALL "NB02-A"
℄ RAMP BB-35N
℄ DC MLN-287W
℄ 35W NGP
IH 35W
℄ 35W ML
℄ 35W SGP
RET WALL "SB01-L"
RET WALL "SB01-R"
RET WALL "SB01-A"
END BRIDGE
℄ DC 287E-MLS STA 59+65.00
℄ 287
℄ DC 287E-MLS
℄ DC 287E-35S
SAWCUT
PROP CULVERT 2
℄ SBFRI
SBFR
PROP ROW
PROP DRNG ESMT
END BRIDGE
℄ 35W ML STA 1464+34.10
MATCH LINE STA 1442+00
MATCH LINE STA 1466+00
MATCH LINE US 287 STA 486+00
BEGIN BRIDGE
℄ DC MLN-287W STA 49+33.00
BEGIN BRIDGE
℄ DC 287E-MLS STA 50+50.00
BEGIN BRIDGE
℄ DC 35N-287W STA 49+07.00

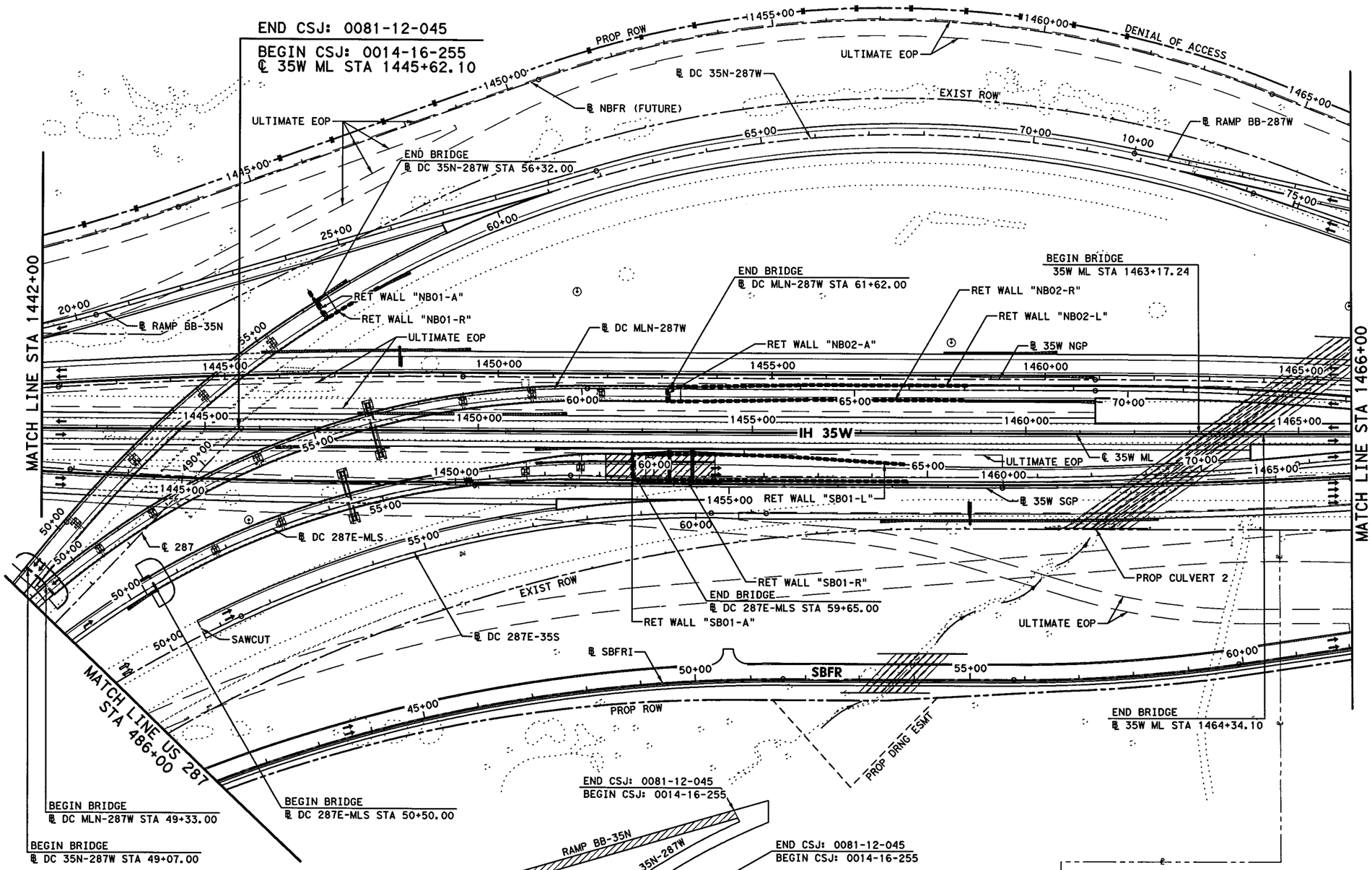

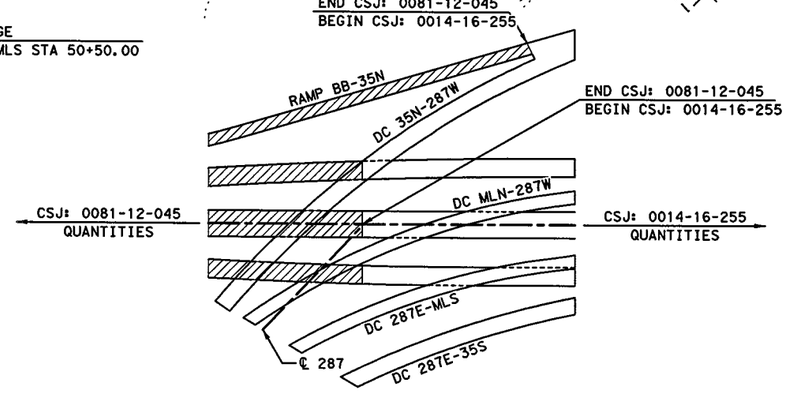

CSJ QUANTITY LIMITS
NOT TO SCALE

0' 50' 100' 200'
SCALE IN FEET

STATE OF TEXAS
KURT W. AUNGST
90848
LICENSED
PROFESSIONAL ENGINEER
7/11/12

KENNEDY CONSULTING
TBPE REGISTRATION NO. F-926

Texas Department of Transportation
© 2012

IH 35W FROM NORTH TARRANT PKWY TO IH 820

PROJECT LAYOUT
STA 1442+00 TO STA 1466+00

SCALE = 1" = 200'
SHEET 3 OF 10

DESIGN	FED. RD. DIV. NO.	FEDERAL AID PROJECT NO.		HIGHWAY NO.
KCI	6	(SEE TITLE SHEET)		IH 35W
GRAPHICS	STATE	DISTRICT	COUNTY	SHEET NO.
KCI	TEXAS	FTW	TARRANT	10
CHECK	CONTROL	SECTION	JOB	
KCI	0014	16	255, ETC.	

FILENAME: S3BPL03.dgn
DRAWING DATE: 7/13/2012

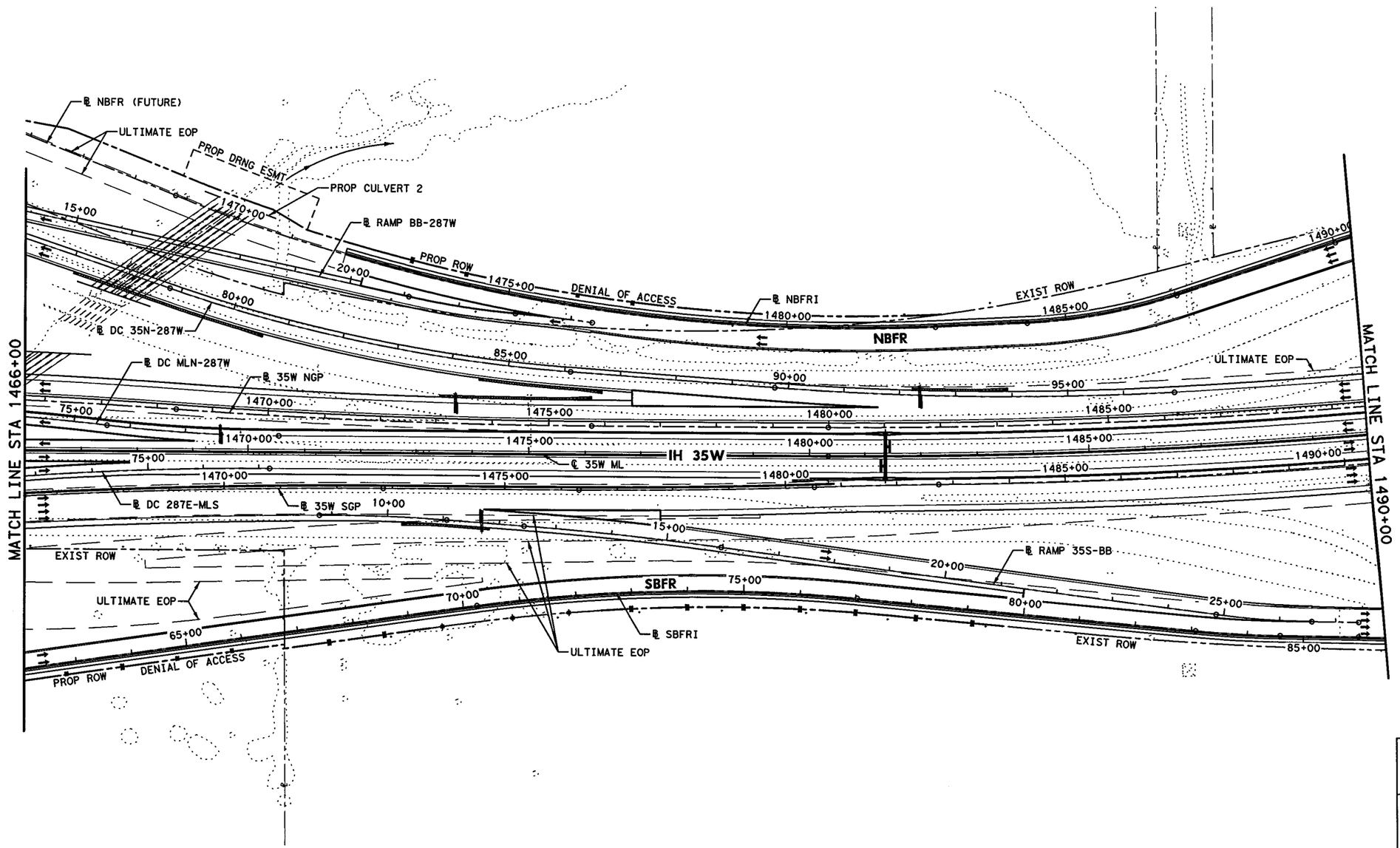

STATE OF TEXAS
KURT W. AUNGST
90848
LICENSED
PROFESSIONAL ENGINEER
7/11/12

KENNEDY CONSULTING
TBPE REGISTRATION NO. F-926

Texas Department of Transportation
© 2012

IH 35W FROM NORTH TARRANT PKWY TO IH 820

PROJECT LAYOUT
STA 1466+00 TO STA 1490+00

SCALE = 1" = 200'

SHEET 4 OF 10

DESIGN	FED. RD. DIV. NO.	FEDERAL AID PROJECT NO.		HIGHWAY NO.
KCI	6	(SEE TITLE SHEET)		IH 35W
GRAPHICS	STATE	DISTRICT	COUNTY	SHEET NO.
KCI	TEXAS	FTW	TARRANT	11
CHECK	CONTROL	SECTION	JOB	
KCI	0014	16	255, ETC.	

DRAWING DATE: 7/13/2012 FILENAME: S3BPL04.dgn

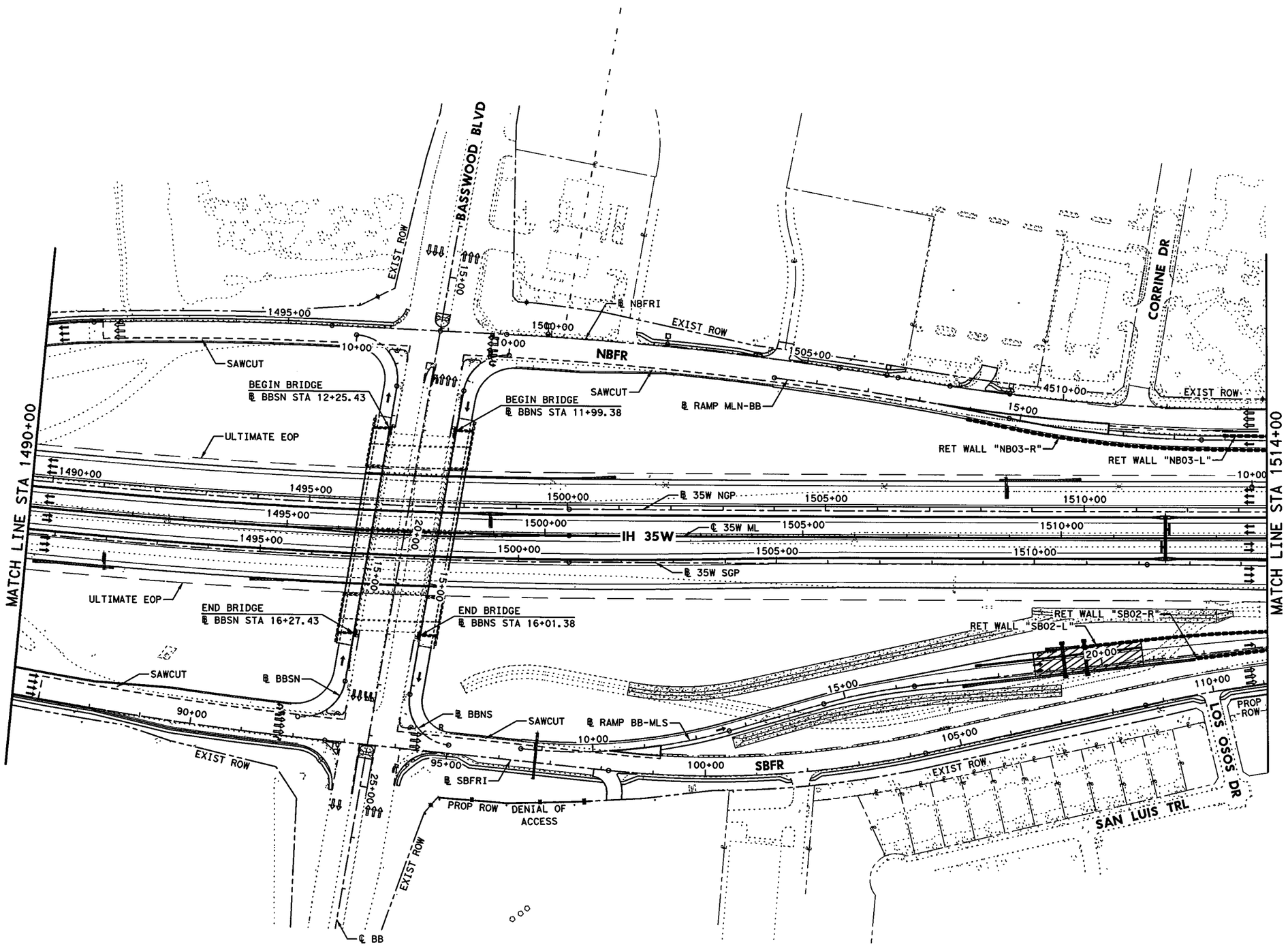

0' 50' 100' 200'

SCALE IN FEET

STATE OF TEXAS
KURT W. AUNGST
90848
LICENSED
PROFESSIONAL ENGINEER

7/11/12

KENNEDY CONSULTING
TBPE REGISTRATION NO. F-926

Texas Department of Transportation
© 2012

IH 35W FROM NORTH TARRANT PKWY TO IH 820

PROJECT LAYOUT
STA 1490+00 TO STA 1514+00

SCALE = 1" = 200'

SHEET 5 OF 10

DESIGN	FED. RD. DIV. NO.	FEDERAL AID PROJECT NO.		HIGHWAY NO.
KCI	6	(SEE TITLE SHEET)		IH 35W
GRAPHICS KCI	STATE	DISTRICT	COUNTY	SHEET NO.
CHECK KCI	TEXAS	FTW	TARRANT	12
CHECK KCI	CONTROL	SECTION	JOB	
	0014	16	255, ETC.	

FILENAME: S3BPL05.dgn

DRAWING DATE: 7/13/2012

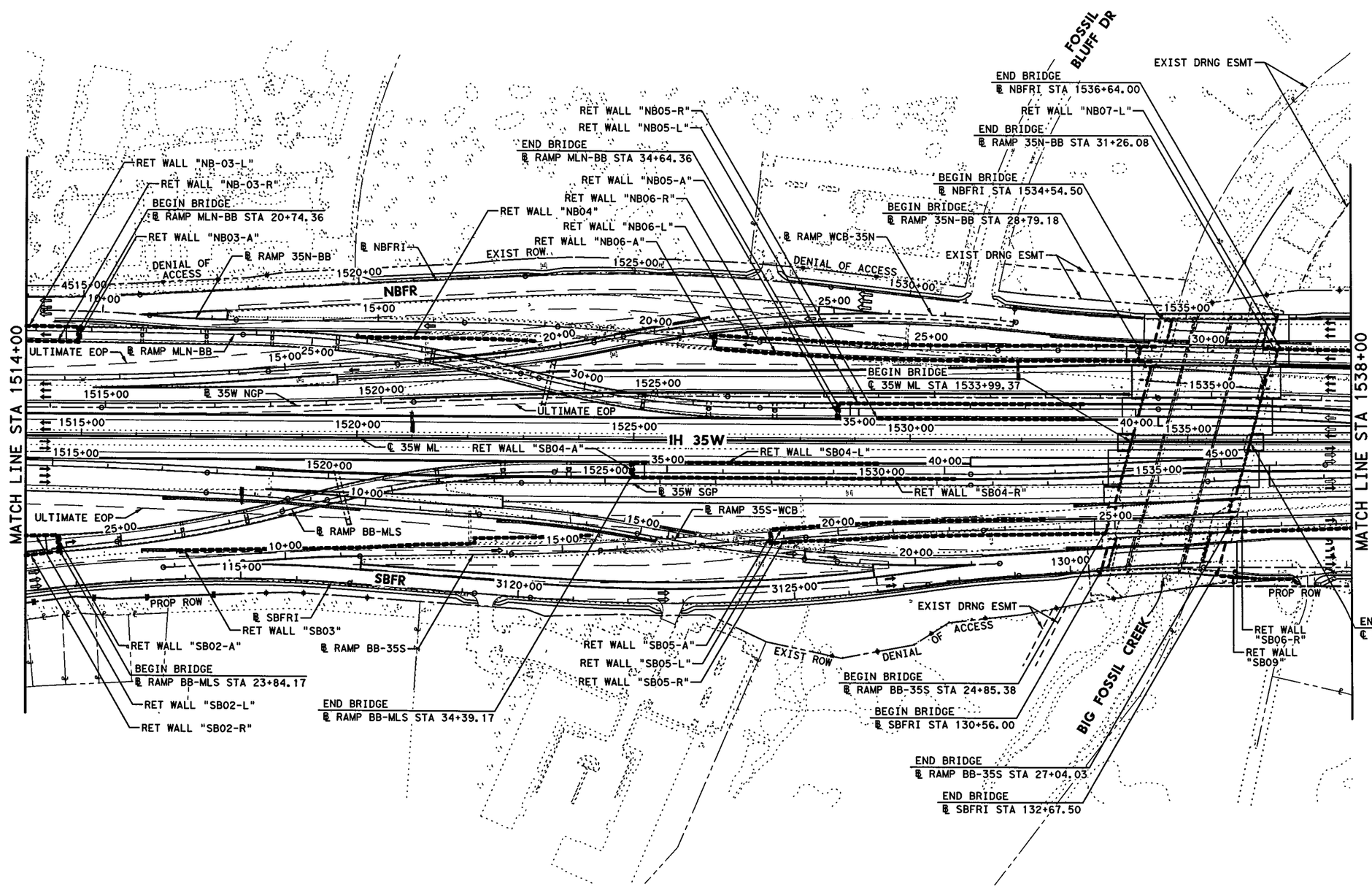

0' 50' 100' 200'
SCALE IN FEET

STATE OF TEXAS
KURT W. AUNGST
90848
LICENSED PROFESSIONAL ENGINEER
7/11/12

KENNEDY CONSULTING
TBPE REGISTRATION NO. F-926

Texas Department of Transportation
© 2012

IH 35W FROM NORTH TARRANT PKWY TO IH 820

PROJECT LAYOUT
STA 1514+00 TO STA 1538+00

SCALE = 1" = 200' SHEET 6 OF 10

DESIGN	FED. RD. DIV. NO.	FEDERAL AID PROJECT NO.		HIGHWAY NO.
KCI	6	(SEE TITLE SHEET)		IH 35W
GRAPHICS	STATE	DISTRICT	COUNTY	SHEET NO.
KCI	TEXAS	FTW	TARRANT	13
CHECK	CONTROL	SECTION	JOB	
KCI	0014	16	255, ETC.	

DRAWING DATE: 7/13/2012 FILENAME: S3BPL06.dgn

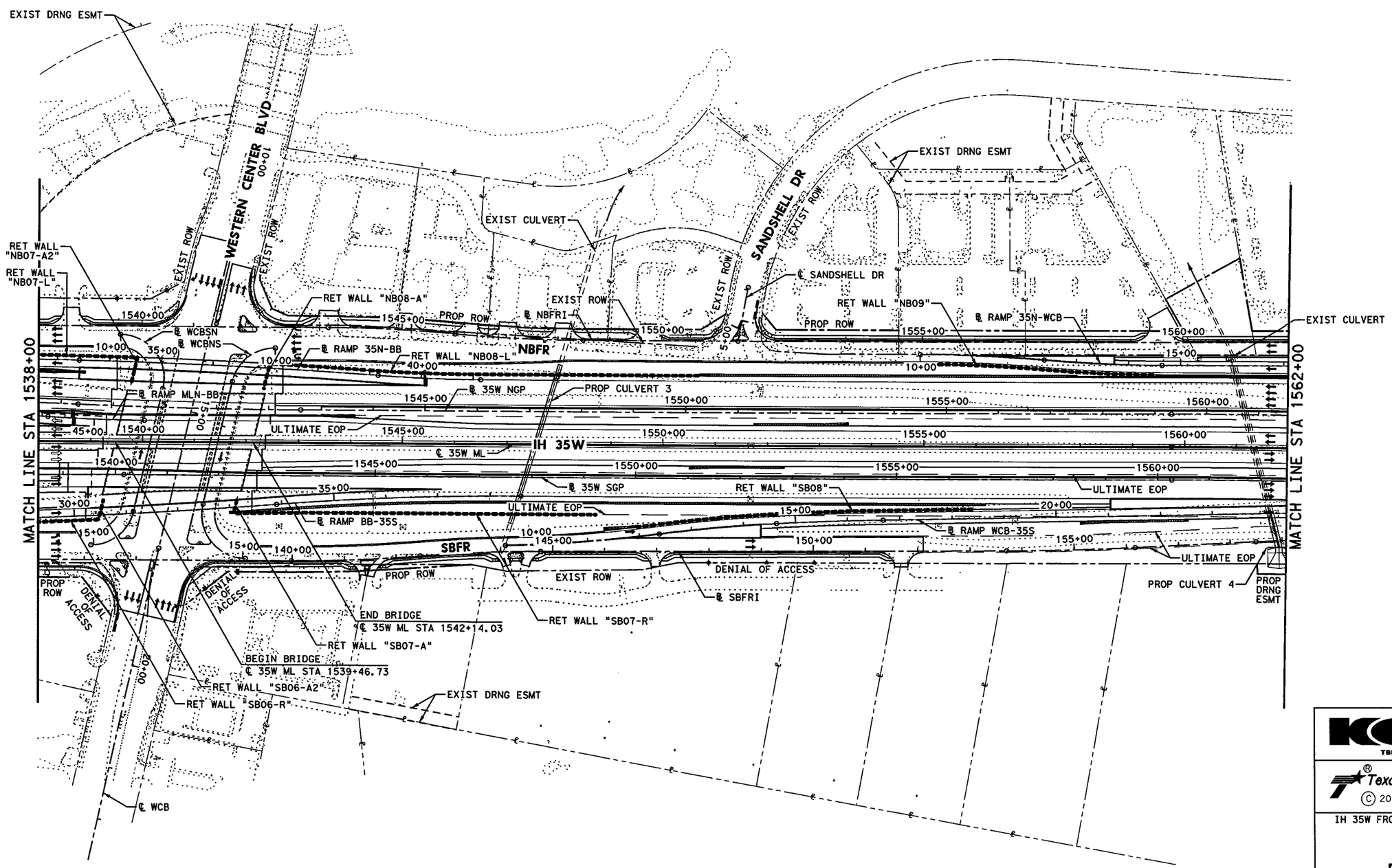

STATE OF TEXAS
KURT W. AUNGST
90848
LICENSED PROFESSIONAL ENGINEER
7/11/12

KENNEDY CONSULTING
TBPE REGISTRATION NO. F-926

Texas Department of Transportation
© 2012

IH 35W FROM NORTH TARRANT PKWY TO IH 820

PROJECT LAYOUT
STA 1538+00 TO STA 1562+00

SCALE = 1" = 200'

SHEET 7 OF 10

DESIGN	FED. RD. DIV. NO.	FEDERAL AID PROJECT NO.		HIGHWAY NO.
KCI	6	(SEE TITLE SHEET)		IH 35W
GRAPHICS KCI	STATE	DISTRICT	COUNTY	SHEET NO.
CHECK KCI	TEXAS	FTW	TARRANT	14
CHECK KCI	CONTROL	SECTION	JOB	
	0014	16	255, ETC.	

DRAWING DATE: 7/13/2012 FILENAME: S3BPL07.dgn

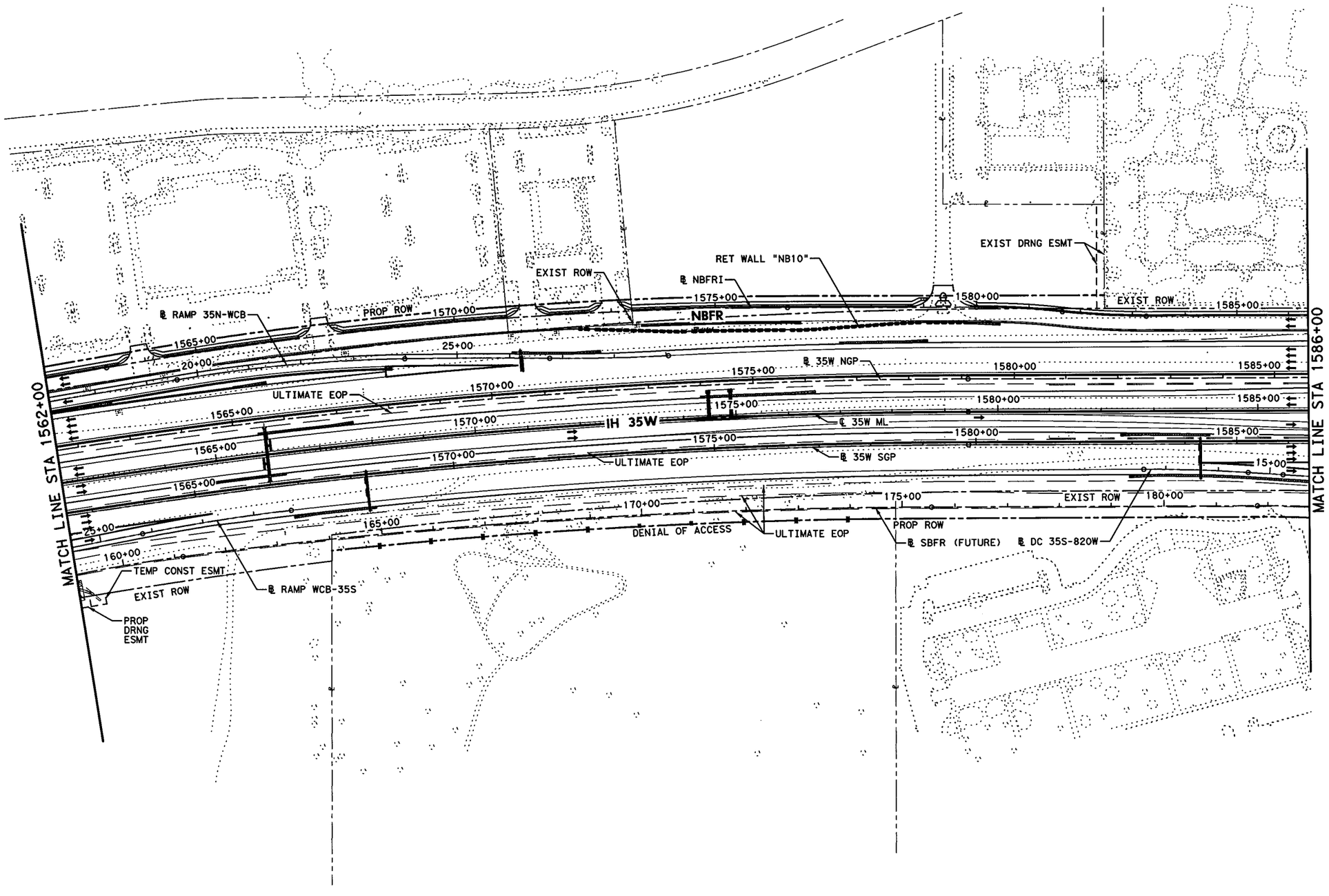

0' 50' 100' 200'

SCALE IN FEET

STATE OF TEXAS
KURT W. AUNGST
90848
LICENSED
PROFESSIONAL ENGINEER

7/31/12

KENNEDY CONSULTING
TBPE REGISTRATION NO. F-926

Texas Department of Transportation
© 2012

IH 35W FROM NORTH TARRANT PKWY TO IH 820

PROJECT LAYOUT
STA 1562+00 TO STA 1586+00

SCALE = 1" = 200'

SHEET 8 OF 10

DESIGN	FED. RD. DIV. NO.	FEDERAL AID PROJECT NO.		HIGHWAY NO.
KCI	6	(SEE TITLE SHEET)		IH 35W
GRAPHICS KCI	STATE	DISTRICT	COUNTY	SHEET NO.
CHECK KCI	TEXAS	FTW	TARRANT	15
CHECK KCI	CONTROL	SECTION	JOB	
	0014	16	255, ETC.	

FILENAME: S3BPL08.dgn

DRAWING DATE: 7/31/2012

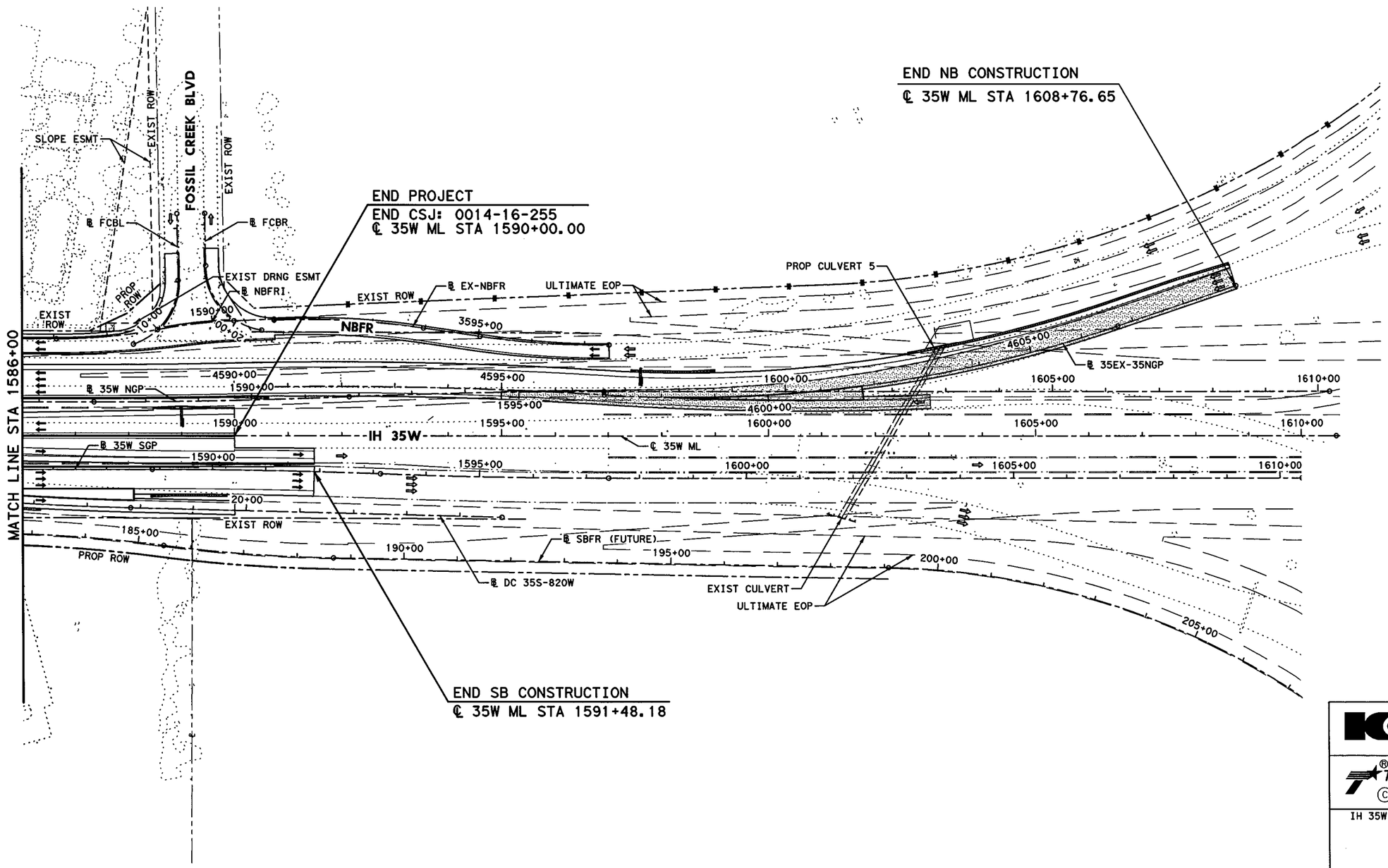

0' 50' 100' 200'
SCALE IN FEET

STATE OF TEXAS
KURT W. AUNGST
90848
LICENSED
PROFESSIONAL ENGINEER
7/31/12

KENNEDY CONSULTING
TBPE REGISTRATION NO. F-926

Texas Department of Transportation
© 2012

IH 35W FROM NORTH TARRANT PKWY TO IH 820

PROJECT LAYOUT
STA 1586+00 TO END PROJECT

SCALE = 1" = 200'

SHEET 9 OF 10

DESIGN	FED. RD. DIV. NO.	FEDERAL AID PROJECT NO.		HIGHWAY NO.
KCI	6	(SEE TITLE SHEET)		IH 35W
GRAPHICS KCI	STATE	DISTRICT	COUNTY	SHEET NO.
CHECK KCI	TEXAS	FTW	TARRANT	16
CHECK KCI	CONTROL	SECTION	JOB	
	0014	16	255, ETC.	

FILENAME: S3BPL09.dgn

DRAWING DATE: 7/30/2012

0' 50' 100' 200'
SCALE IN FEET

BEGIN CONSTRUCTION
℄ 287 STA 462+35.84

MATCH LINE 35S-287W STA 22+00

DENIAL OF ACCESS

EXIST ROW

WBFR

℄ DC 35S-287W

℄ DC 35N-287W

℄ DC MLN-287W

40+00 35+00 30+00 25+00 40+00 45+00

465+00 470+00 475+00 480+00 485+00

US 287

℄ 287

40+00 45+00

℄ DC 287E-MLS

40+00 45+00

20+00 25+00 30+00

℄ DC 287E-35S

EXIST ROW

℄ EX-SBFR

35+00

PROP ROW

SBFR

EXIST ROW

℄ SBFRI

40+00

MATCH LINE US 287 STA 486+00

END: CSJ 0081-12-045
BEGIN CSJ: 0014-16-255

CSJ: 0081-12-045
QUANTITIES

DC 35S-287W

CSJ: 0014-16-255
QUANTITIES

℄ 287

SBFR

CSJ QUANTITY LIMITS

STATE OF TEXAS
KURT W. AUNGST
90848
LICENSED
PROFESSIONAL ENGINEER

7/11/12

KENNEDY CONSULTING
TBPE REGISTRATION NO. F-926

Texas Department of Transportation
© 2012

IH 35W FROM NORTH TARRANT PKWY TO IH 820

PROJECT LAYOUT
US 287 STA 462+00 TO STA 486+00

SCALE = 1" = 200'

SHEET 10 OF 10

DESIGN	FED. RD. DIV. NO.	FEDERAL AID PROJECT NO.		HIGHWAY NO.
KCI	6	(SEE TITLE SHEET)		IH 35W
GRAPHICS	STATE	DISTRICT	COUNTY	SHEET NO.
KCI	TEXAS	FTW	TARRANT	17
CHECK	CONTROL	SECTION	JOB	
KCI	0014	16	255, ETC.	

FILENAME: S3BPL10.dgn

DRAWING DATE: 7/13/2012

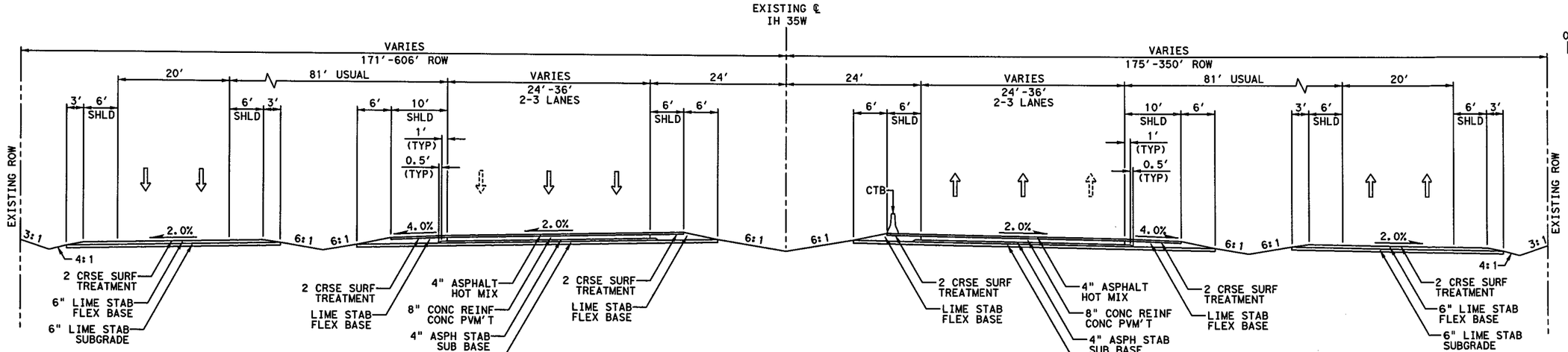

NOTE:
NO FRONTAGE RD FROM
STA 1401+00 TO 1463+50

NOTE:
1. SEE "EXISTING SBFR TYPICAL SECTION" BELOW FOR ℄ 35W ML STA 1401+00 TO STA 1435+00

0' 10' 20'
SCALE IN FEET

EXISTING IH 35W TYPICAL SECTION

℄ 35W ML STA 1401+00.00 TO STA 1506+00.00

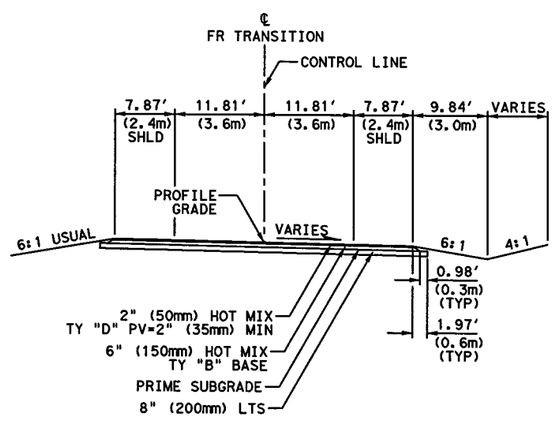

EXISTING NB & SB FRONTAGE ROAD TRANSITION TYPICAL SECTION

℄ NBFRI STA 1485+00.00 TO STA 1495+00.00
℄ SBFRI STA 80+00.00 TO STA 90+00.00

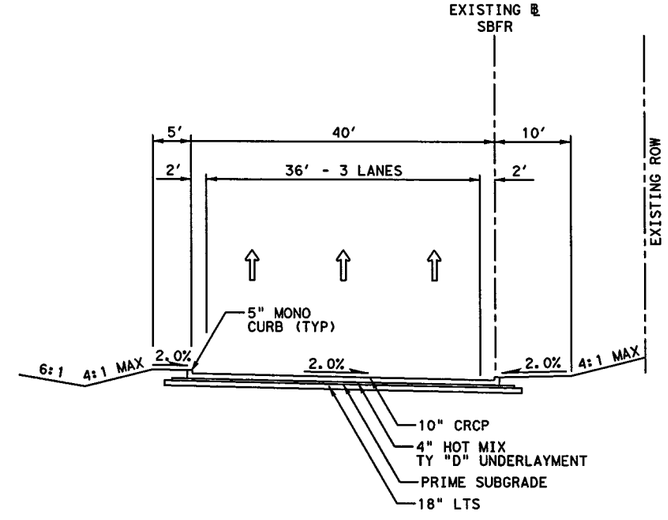

EXISTING SBFR TYPICAL SECTION

℄ 35W ML STA 1401+00.00 TO STA 1435+00.00

STATE OF TEXAS
SYED S. HAQ
94660
LICENSED
PROFESSIONAL ENGINEER
Syed Sajidul Haq
07/13/12

KENNEDY CONSULTING
TBPE REGISTRATION NO. F-926

Texas Department of Transportation
© 2012

IH 35W FROM NORTH TARRANT PKWY TO IH 820

TYPICAL SECTIONS
EXISTING IH 35W

SCALE 1" = 20' SHEET 1 OF 3

DESIGN	FED. RD. DIV. NO.	FEDERAL AID PROJECT NO.		HIGHWAY NO.
KCI	6	(SEE TITLE SHEET)		IH 35W
GRAPHICS	STATE	DISTRICT	COUNTY	SHEET NO.
KCI	TEXAS	FTW	TARRANT	18
CHECK	CONTROL	SECTION	JOB	
KCI	0014	16	255, ETC.	

FILENAME: S3BTYP01.dgn
DRAWING DATE: 7/13/2012

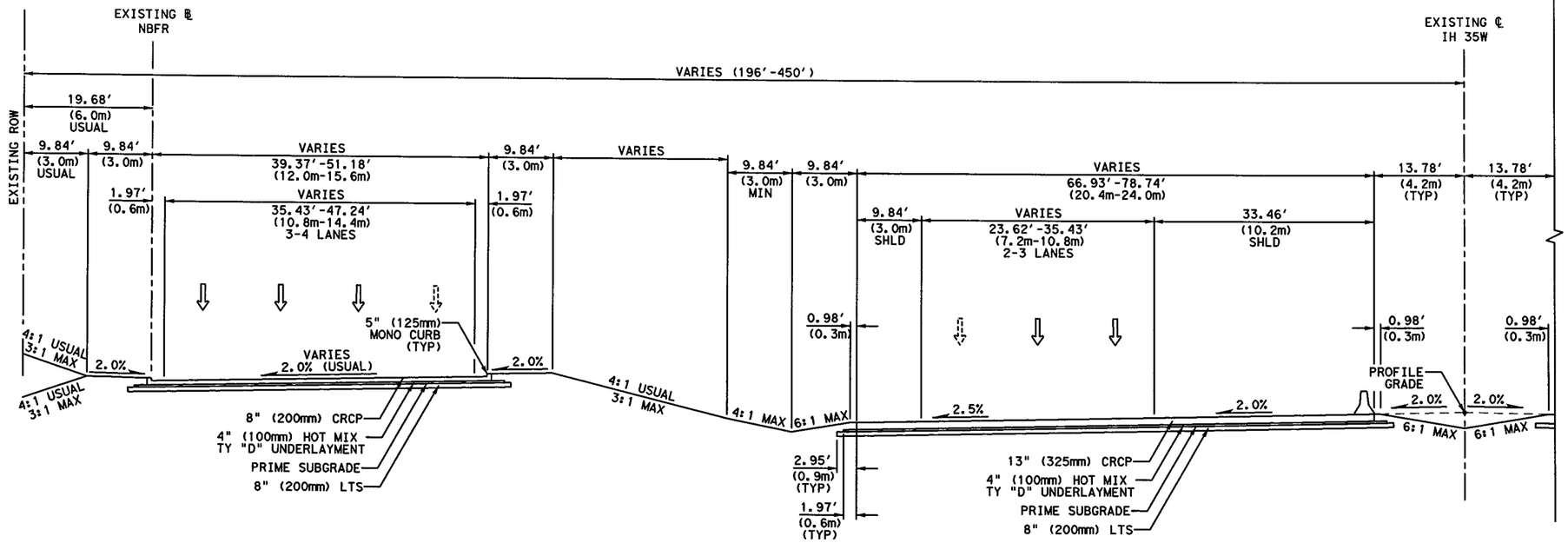

EXISTING IH 35W TYPICAL SECTION

℄ 35W ML STA 1506+00.00 TO STA 1553+75.00

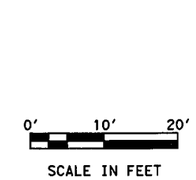

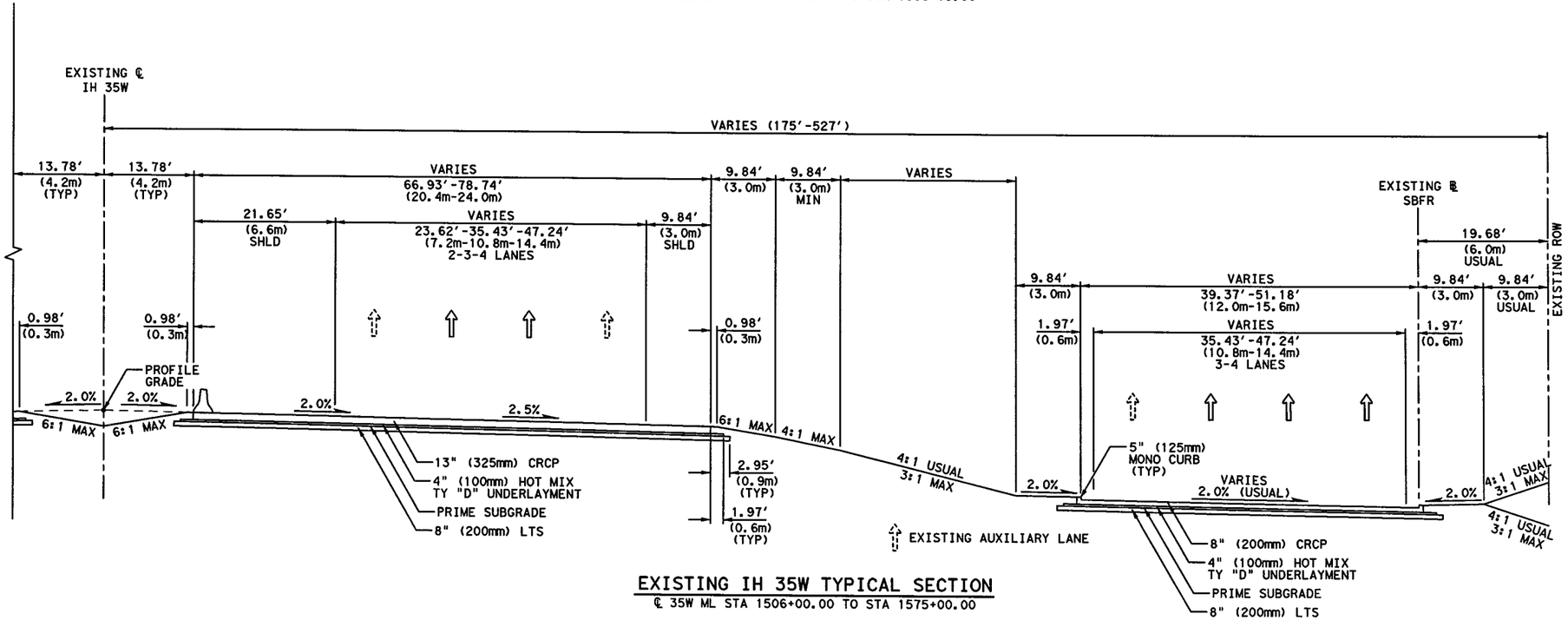

EXISTING IH 35W TYPICAL SECTION

℄ 35W ML STA 1506+00.00 TO STA 1575+00.00

STATE OF TEXAS
SYED S. HAQ
94660
LICENSED
PROFESSIONAL ENGINEER

Syed Sajidul Haq
07/13/12

KENNEDY CONSULTING
TBPE REGISTRATION NO. F-926

Texas Department of Transportation
© 2012

IH 35W FROM NORTH TARRANT PKWY TO IH 820

TYPICAL SECTIONS

EXISTING IH 35W

SCALE 1" = 20'

SHEET 2 OF 3

DESIGN	FED. RD. DIV. NO.	FEDERAL AID PROJECT NO.		HIGHWAY NO.
KCI	6	(SEE TITLE SHEET)		IH 35W
GRAPHICS KCI	STATE	DISTRICT	COUNTY	SHEET NO.
CHECK KCI	TEXAS	FTW	TARRANT	19
CHECK KCI	CONTROL	SECTION	JOB	
	0014	16	255, ETC.	

FILENAME: S3BTYP02.dgn

DRAWING DATE: 7/13/2012

0' 10' 20'
SCALE IN FEET

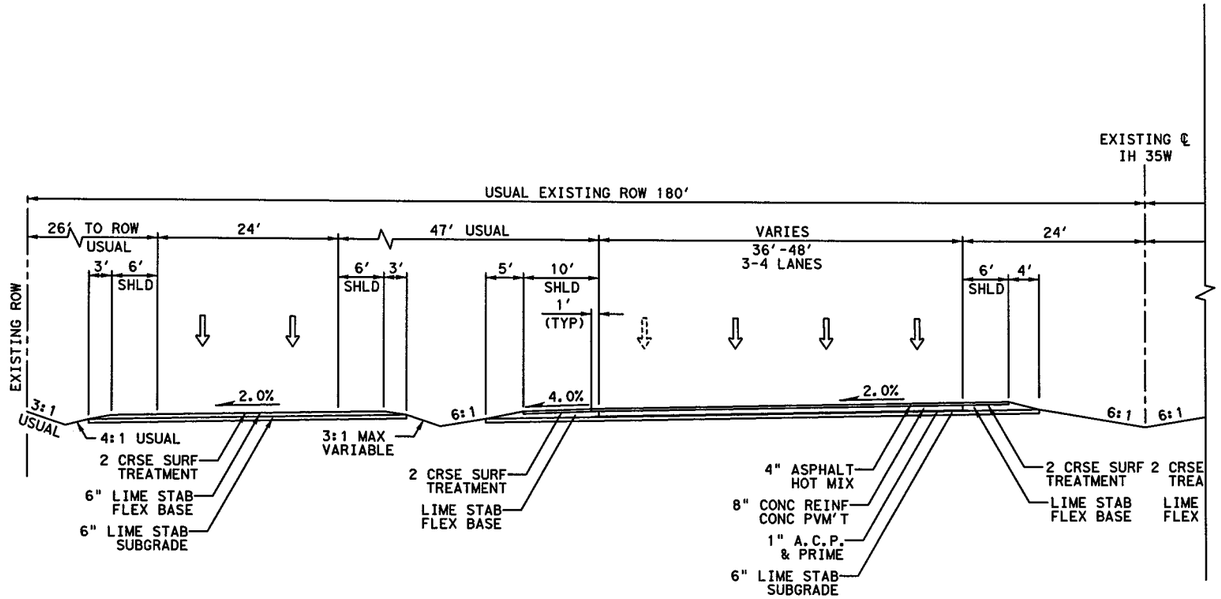

EXISTING IH 35W TYPICAL SECTION

℄ 35W ML STA 1553+75.00 TO STA 1590+00.00

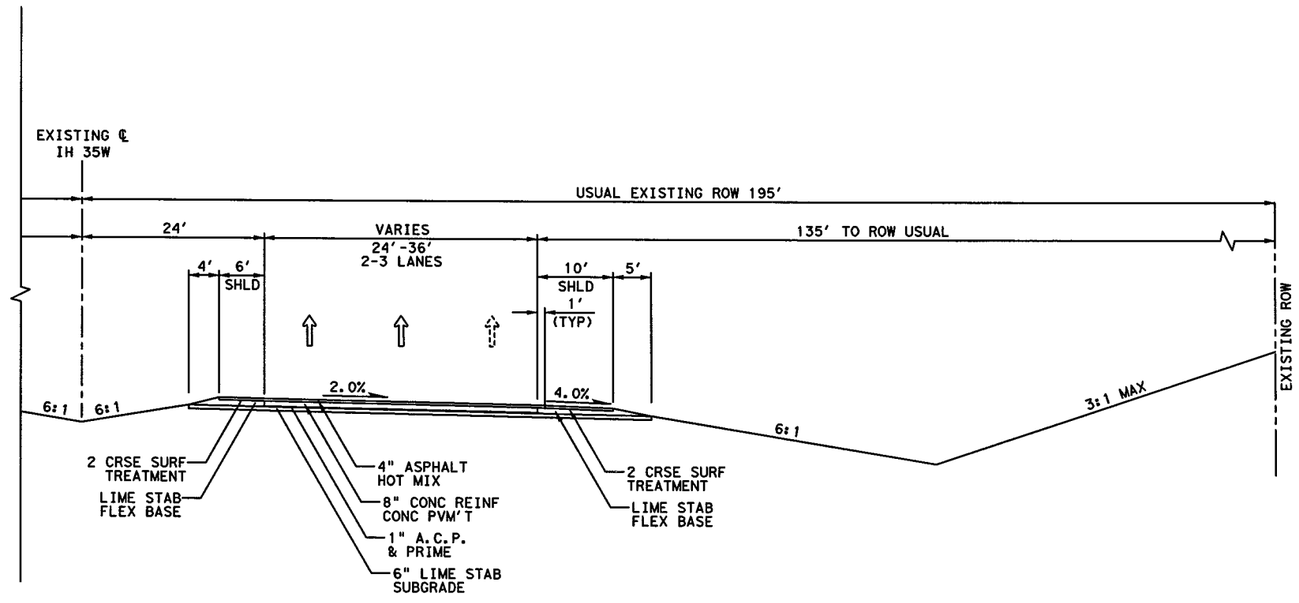

EXISTING IH 35W TYPICAL SECTION

℄ 35W ML STA 1575+00.00 TO STA 1590+00.00

STATE OF TEXAS
SYED S. HAQ
94660
LICENSED
PROFESSIONAL ENGINEER
Syed Sajidul Haq
07/13/12

KENNEDY CONSULTING
TBPE REGISTRATION NO. F-926

Texas Department of Transportation
© 2012

IH 35W FROM NORTH TARRANT PKWY TO IH 820

TYPICAL SECTIONS

EXISTING IH 35W

SCALE 1" = 20' SHEET 3 OF 3

DESIGN	FED. RD. DIV. NO.	FEDERAL AID PROJECT NO.		HIGHWAY NO.
KCI	6	(SEE TITLE SHEET)		IH 35W
GRAPHICS KCI	STATE	DISTRICT	COUNTY	SHEET NO.
CHECK KCI	TEXAS	FTW	TARRANT	20
CHECK KCI	CONTROL 0014	SECTION 16	JOB 255, ETC.	

FILENAME: S3BTYP03.dgn

DRAWING DATE: 7/13/2012

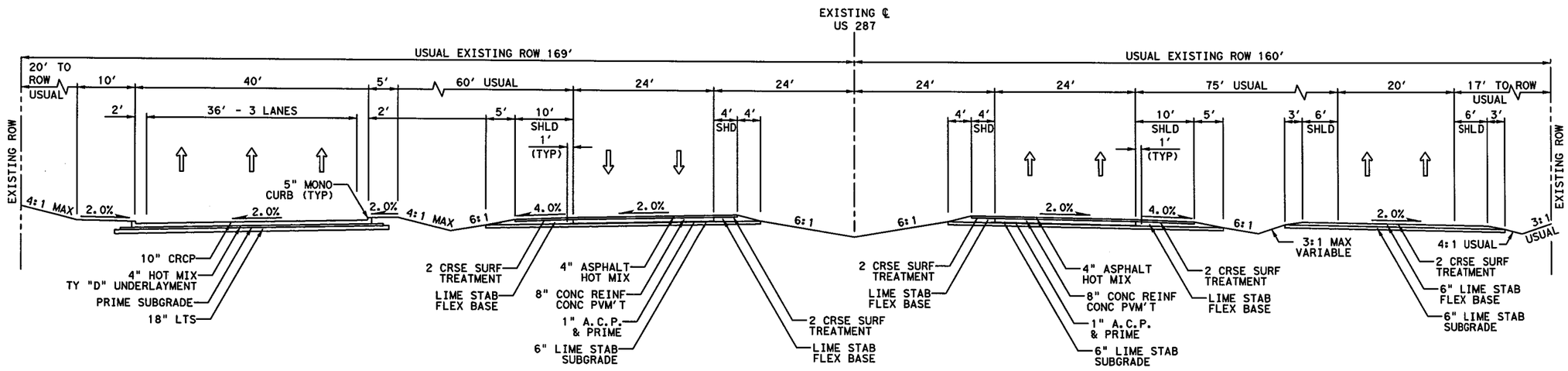

0′ 10′ 20′
SCALE IN FEET

EXISTING US 287 TYPICAL SECTION

℄ US 287 STA 465+55.00 TO STA 473+36.00

STATE OF TEXAS
SYED S. HAQ
94660
LICENSED
PROFESSIONAL ENGINEER

Syed Sajidul Haq
07/13/12

KENNEDY CONSULTING
TBPE REGISTRATION NO. F-926

Texas Department of Transportation
© 2012

IH 35W FROM NORTH TARRANT PKWY TO IH 820

TYPICAL SECTIONS
EXISTING US 287

SCALE 1" = 20′ SHEET 1 OF 1

DESIGN	FED. RD. DIV. NO.	FEDERAL AID PROJECT NO.		HIGHWAY NO.
KCI	6	(SEE TITLE SHEET)		IH 35W
GRAPHICS KCI	STATE	DISTRICT	COUNTY	SHEET NO.
CHECK KCI	TEXAS	FTW	TARRANT	21
CHECK KCI	CONTROL	SECTION	JOB	
	0014	16	255, ETC.	

DRAWING DATE: 7/13/2012 FILENAME: S3BTYP04.dgn

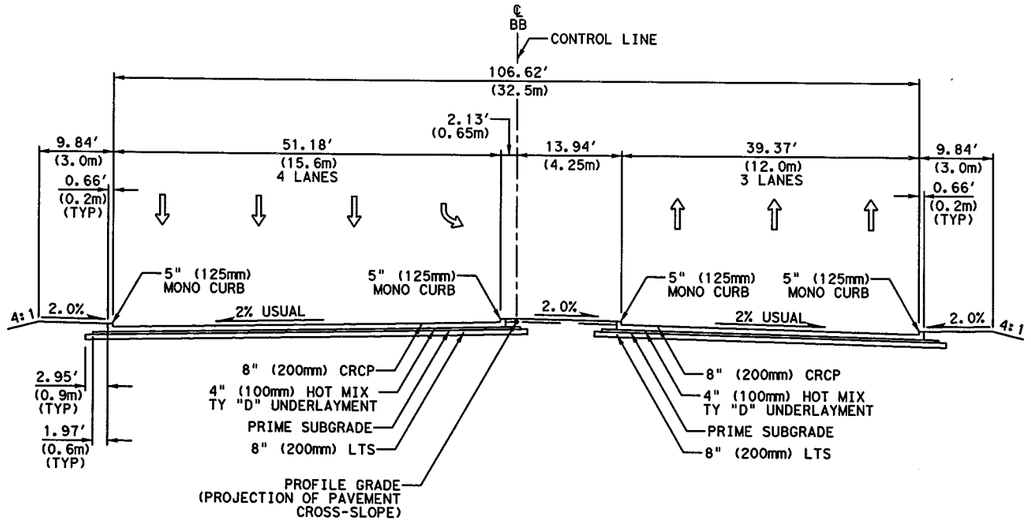

EXISTING BASSWOOD BOULEVARD SECTION W/LEFT TURN LANE

℄ BB STA 16+70.00 TO STA 18+25.00

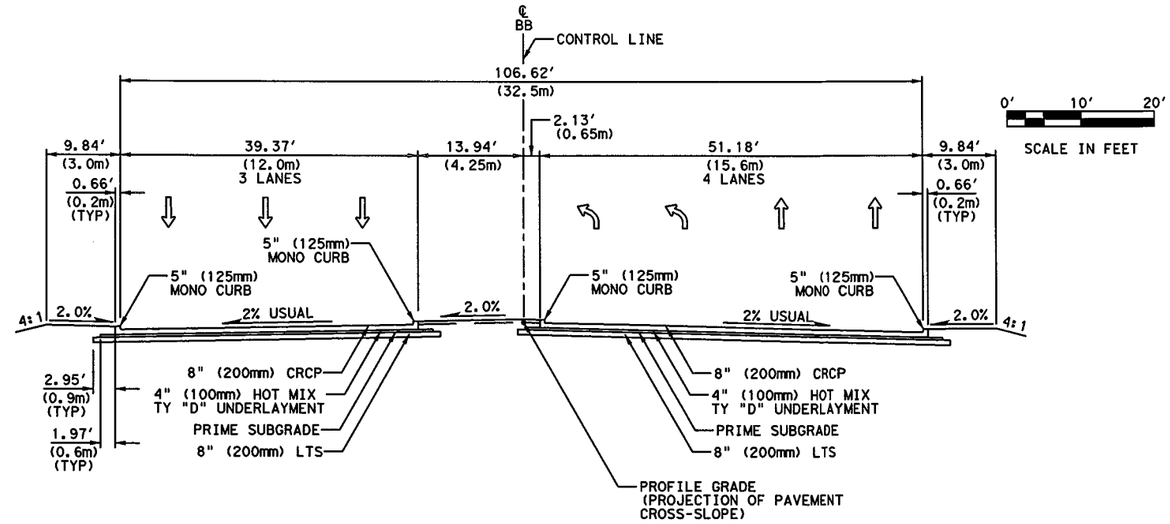

EXISTING BASSWOOD BOULEVARD SECTION W/LEFT TURN LANE

℄ BB STA 21+75.00 TO STA 23+55.00

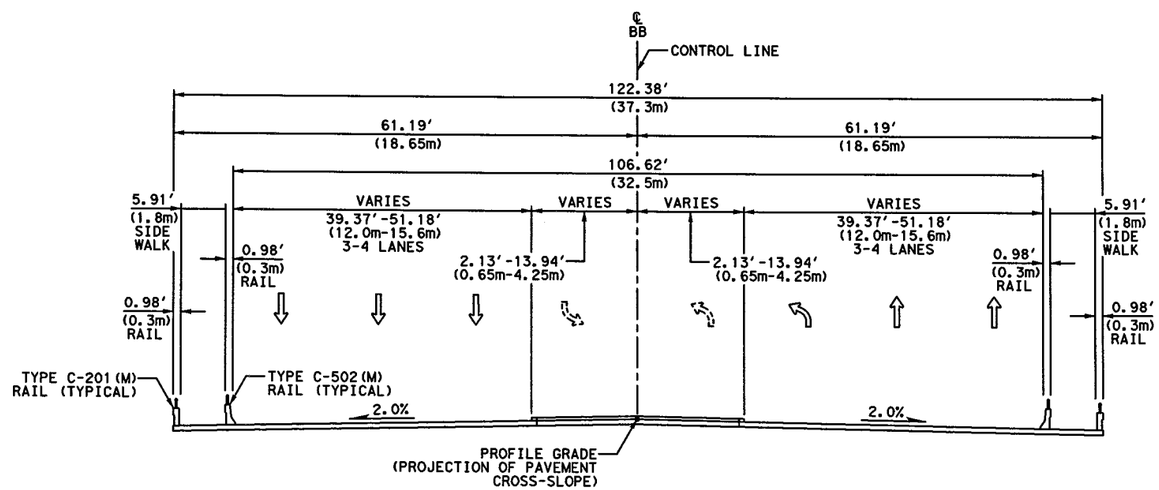

EXISTING BASSWOOD BOULEVARD SECTION THRU BRIDGE

℄ BB STA 18+25.00 TO STA 21+75.00

STATE OF TEXAS
SYED S. HAQ
94660
LICENSED
PROFESSIONAL ENGINEER

Syed Sajidul Haq
07/13/12

KENNEDY CONSULTING
TBPE REGISTRATION NO. F-926

Texas Department of Transportation
© 2012

IH 35W FROM NORTH TARRANT PKWY TO IH 820

TYPICAL SECTIONS

EXISTING CROSS STREETS

SCALE 1" = 20′ SHEET 1 OF 2

DESIGN	FED. RD. DIV. NO.	FEDERAL AID PROJECT NO.		HIGHWAY NO.
KCI	6	(SEE TITLE SHEET)		IH 35W
GRAPHICS KCI	STATE	DISTRICT	COUNTY	SHEET NO.
CHECK KCI	TEXAS	FTW	TARRANT	22
CHECK KCI	CONTROL 0014	SECTION 16	JOB 255, ETC.	

DRAWING DATE: 7/13/2012 FILENAME: S3BTYP05.dgn

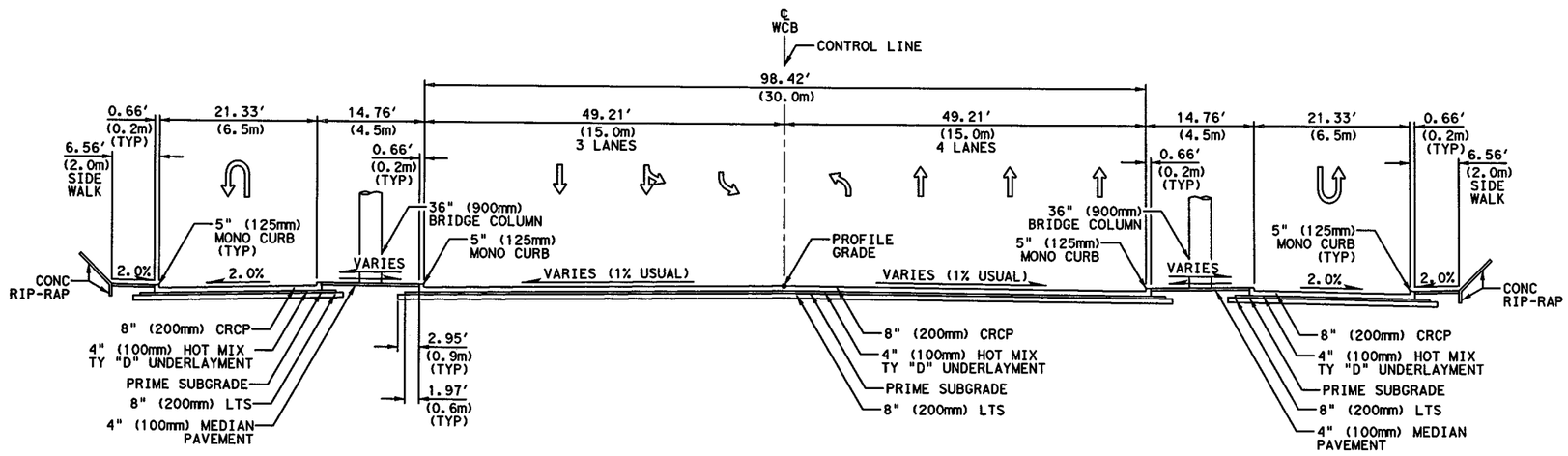

EXISTING WESTERN CENTER BOULEVARD TYPICAL SECTION

℄ WCB STA 14+00.00 TO STA 17+50.00

0' 10' 20'

SCALE IN FEET

STATE OF TEXAS
SYED S. HAQ
94660
LICENSED
PROFESSIONAL ENGINEER

Syed Sajidul Haq
07/13/12

KENNEDY CONSULTING
TBPE REGISTRATION NO. F-926

Texas Department of Transportation
© 2012

IH 35W FROM NORTH TARRANT PKWY TO IH 820

TYPICAL SECTIONS

EXISTING CROSS STREETS

SCALE 1" = 20' SHEET 2 OF 2

DESIGN	FED. RD. DIV. NO.	FEDERAL AID PROJECT NO.		HIGHWAY NO.
KCI	6	(SEE TITLE SHEET)		IH 35W
GRAPHICS	STATE	DISTRICT	COUNTY	SHEET NO.
KCI	TEXAS	FTW	TARRANT	23
CHECK	CONTROL	SECTION	JOB	
KCI	0014	16	255, ETC.	

CHECK KCI

FILENAME: S3BTYP06.dgn

DRAWING DATE: 7/13/2012

0′ 10′ 20′

SCALE IN FEET

LEGEND:

- A1 1.25" STONE MTRX-ASPH SMA-F SAC-B PG76-22
- A2 9" D-GR HMA(QCQA) TY-B PG64-22
- A3 10.5" D-GR HMA(QCQA) TY-B PG64-22
- A4 5" D-GR HMA(QCQA) TY-B PG64-22
- A5 6" D-GR HMA(QCQA) TY-B PG64-22
- A6 8" D-GR HMA(QCQA) TY-B PG64-22
- A7 D-GR HMA (QCQA) TY-D PG64-22 (LEVEL-UP)
- S1 PRIME COAT(EC-30)
- B1 FL BS (CMP IN PLC)(TY D GR 4)(FNAL POS)(8")
- B2 FL BS (CMP IN PLC)(TY D GR 4)(FNAL POS)(4")
- L1 LIME TRT (EXIST MATL)(18"-36") (SEE SHEET 55C FOR STATION RANGES & DEPTHS)

NOTES:

1. STATION LIMITS SHOWN ARE APPROXIMATE AND FOR NORMAL ROADWAY CONDITIONS. FOR WIDENINGS AND TRANSITIONS, SEE VARIOUS PLAN AND PROFILE SHEETS.
2. SEE TYPICAL SECTIONS MISCELLANEOUS DETAILS SHEET FOR PAVEMENT EDGE AND LIME TREATMENT EXTENSION DETAILS.
3. NORMAL CROSS SLOPES ARE TYPICALLY DISPLAYED. REFER TO ROADWAY PLAN & PROFILE SHEETS AND SUPERELEVATION DATA SHEET FOR ADDITIONAL INFORMATION.
4. SEE SHEET 55C FOR APPLICABLE STATION RANGES AND DEPTHS OF NON-SWELLING SELECT FILL MATERIAL (TY C1 EMBANKMENT).
5. REFER TO ROADWAY PLAN & PROFILE SHEETS FOR MBGF & BARRIER LOCATIONS.

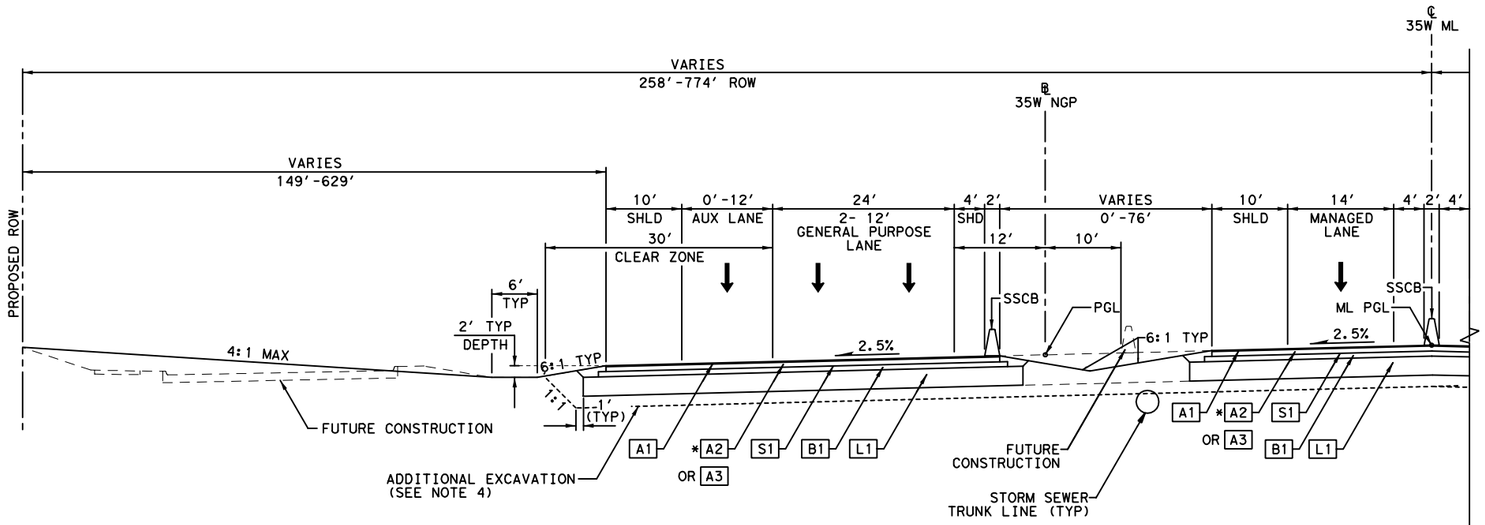

PROPOSED GENERAL IH 35W TYPICAL SECTION

℄ 35W ML STA 1401+00.00 TO STA 1471+63.25

*A2 ℄ 35W ML STA 1401+00.00 TO STA 1451+00.00

A3 ℄ 35W ML STA 1451+00.00 TO STA 1471+63.25

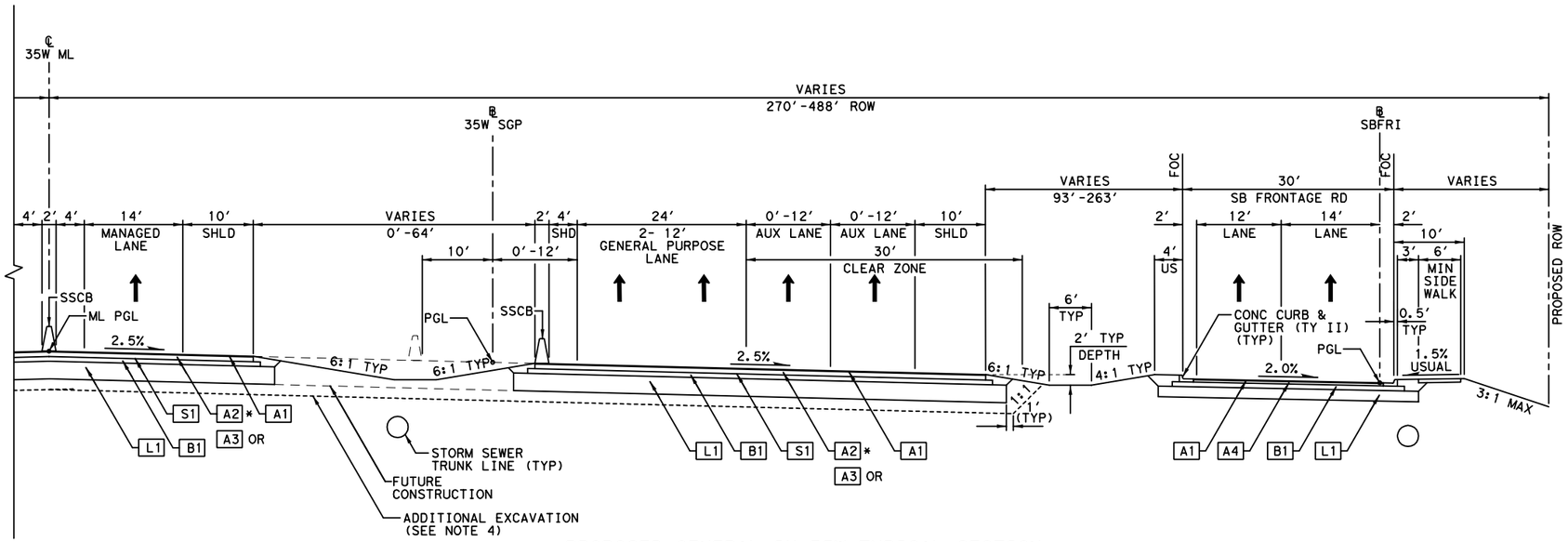

PROPOSED GENERAL IH 35W TYPICAL SECTION

℄ 35W ML STA 1401+00.00 TO STA 1471+63.25

*A2 ℄ 35W ML STA 1401+00.00 TO STA 1451+00.00

A3 ℄ 35W ML STA 1451+00.00 TO STA 1471+63.25

STATE OF TEXAS
SYED S. HAQ
94660
LICENSED
PROFESSIONAL ENGINEER

Syed S. Haq
08/22/2012

KENNEDY CONSULTING
TBPE REGISTRATION NO. F-926

Texas Department of Transportation
© 2012

IH 35W FROM NORTH TARRANT PKWY TO IH 820

TYPICAL SECTIONS

IH 35W GENERAL

SCALE 1" = 20′ SHEET 1 OF 3

DESIGN	FED. RD. DIV. NO.	FEDERAL AID PROJECT NO.		HIGHWAY NO.
KCI	6	(SEE TITLE SHEET)		IH 35W
GRAPHICS	STATE	DISTRICT	COUNTY	SHEET NO.
KCI	TEXAS	FTW	TARRANT	24
CHECK	CONTROL	SECTION	JOB	
KCI	0014	16	255, ETC.	

FILENAME: S3BTYP07.dgn

DRAWING DATE: 8/22/2012

0′ 10′ 20′

SCALE IN FEET

LEGEND:

- A1 1.25" STONE MTRX-ASPH SMA-F SAC-B PG76-22
- A2 9" D-GR HMA(QCQA) TY-B PG64-22
- A3 10.5" D-GR HMA(QCQA) TY-B PG64-22
- A4 5" D-GR HMA(QCQA) TY-B PG64-22
- A5 6" D-GR HMA(QCQA) TY-B PG64-22
- A6 8" D-GR HMA(QCQA) TY-B PG64-22
- A7 D-GR HMA (QCQA) TY-D PG64-22 (LEVEL-UP)
- S1 PRIME COAT(EC-30)
- B1 FL BS (CMP IN PLC)(TY D GR 4)(FNAL POS)(8")
- B2 FL BS (CMP IN PLC)(TY D GR 4)(FNAL POS)(4")
- L1 LIME TRT (EXIST MATL)(18"-36") (SEE SHEET 55C FOR STATION RANGES & DEPTHS)

NOTES:

1. STATION LIMITS SHOWN ARE APPROXIMATE AND FOR NORMAL ROADWAY CONDITIONS. FOR WIDENINGS AND TRANSITIONS, SEE VARIOUS PLAN AND PROFILE SHEETS.
2. SEE TYPICAL SECTIONS MISCELLANEOUS DETAILS SHEET FOR PAVEMENT EDGE AND LIME TREATMENT EXTENSION DETAILS.
3. NORMAL CROSS SLOPES ARE TYPICALLY DISPLAYED. REFER TO ROADWAY PLAN & PROFILE SHEETS AND SUPERELEVATION DATA SHEET FOR ADDITIONAL INFORMATION.
4. SEE SHEET 55C FOR APPLICABLE STATION RANGES AND DEPTHS OF NON-SWELLING SELECT FILL MATERIAL (TY C1 EMBANKMENT).
5. REFER TO ROADWAY PLAN & PROFILE SHEETS FOR MBGF & BARRIER LOCATIONS.

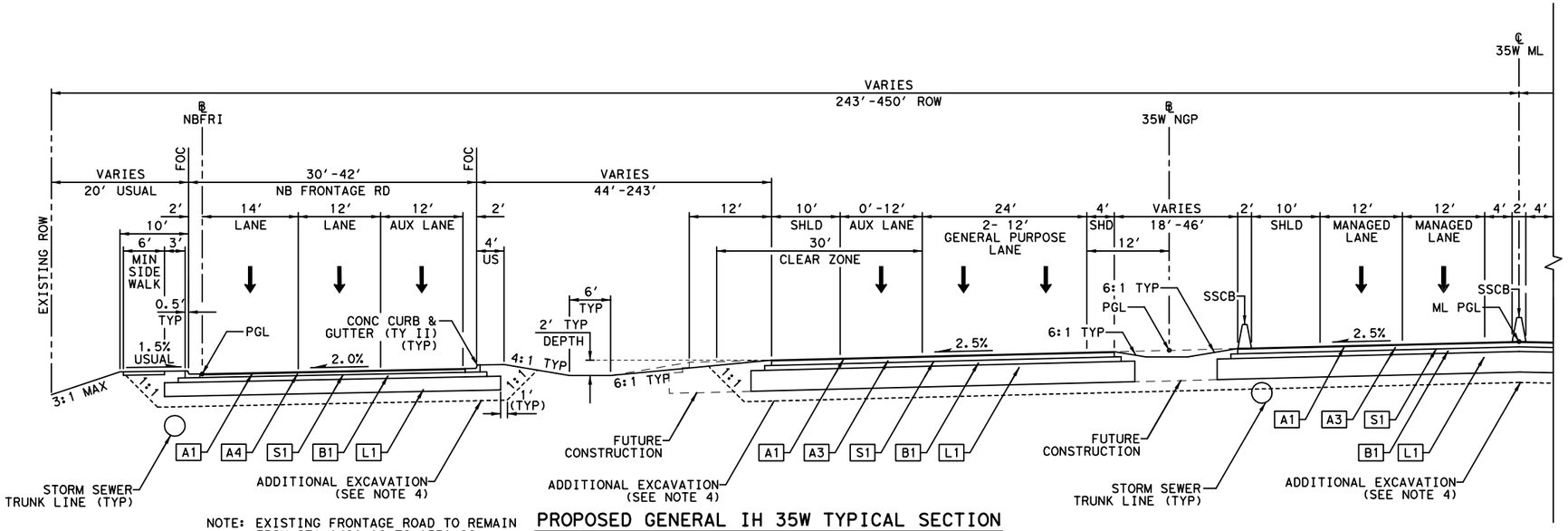

NOTE: EXISTING FRONTAGE ROAD TO REMAIN FROM STA 1491+10 TO 1531+90

PROPOSED GENERAL IH 35W TYPICAL SECTION

℄ 35W ML STA 1471+63.25 TO STA 1543+00.00

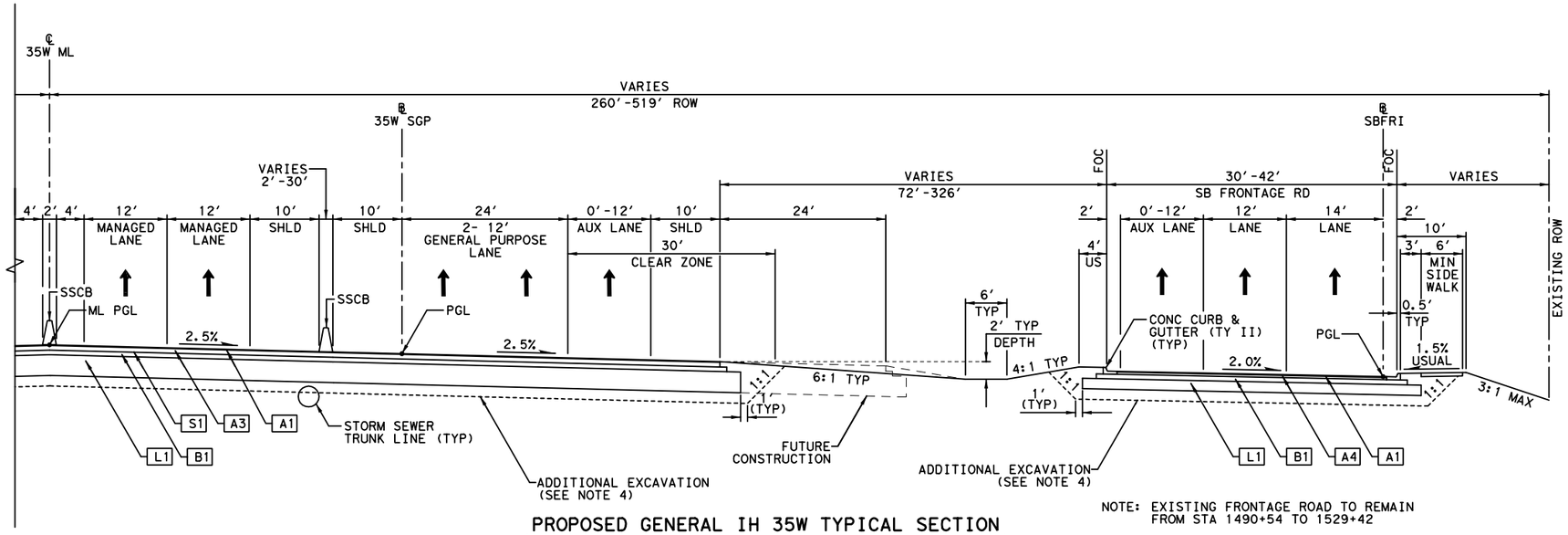

NOTE: EXISTING FRONTAGE ROAD TO REMAIN FROM STA 1490+54 TO 1529+42

PROPOSED GENERAL IH 35W TYPICAL SECTION

℄ 35W ML STA 1471+63.25 TO STA 1543+00.00

STATE OF TEXAS
SYED S. HAQ
94660
LICENSED PROFESSIONAL ENGINEER

Syed S. Haq
08/22/2012

KENNEDY CONSULTING
TBPE REGISTRATION NO. F-926

Texas Department of Transportation
© 2012

IH 35W FROM NORTH TARRANT PKWY TO IH 820

TYPICAL SECTIONS

IH 35W GENERAL

SCALE 1" = 20′ SHEET 2 OF 3

DESIGN KCI	FED. RD. DIV. NO. 6	FEDERAL AID PROJECT NO. (SEE TITLE SHEET)		HIGHWAY NO. IH 35W
GRAPHICS KCI	STATE TEXAS	DISTRICT FTW	COUNTY TARRANT	SHEET NO. 25
CHECK KCI	CONTROL 0014	SECTION 16	JOB 255, ETC.	
CHECK KCI				

FILENAME: S3BTYP08.dgn

DRAWING DATE: 8/22/2012

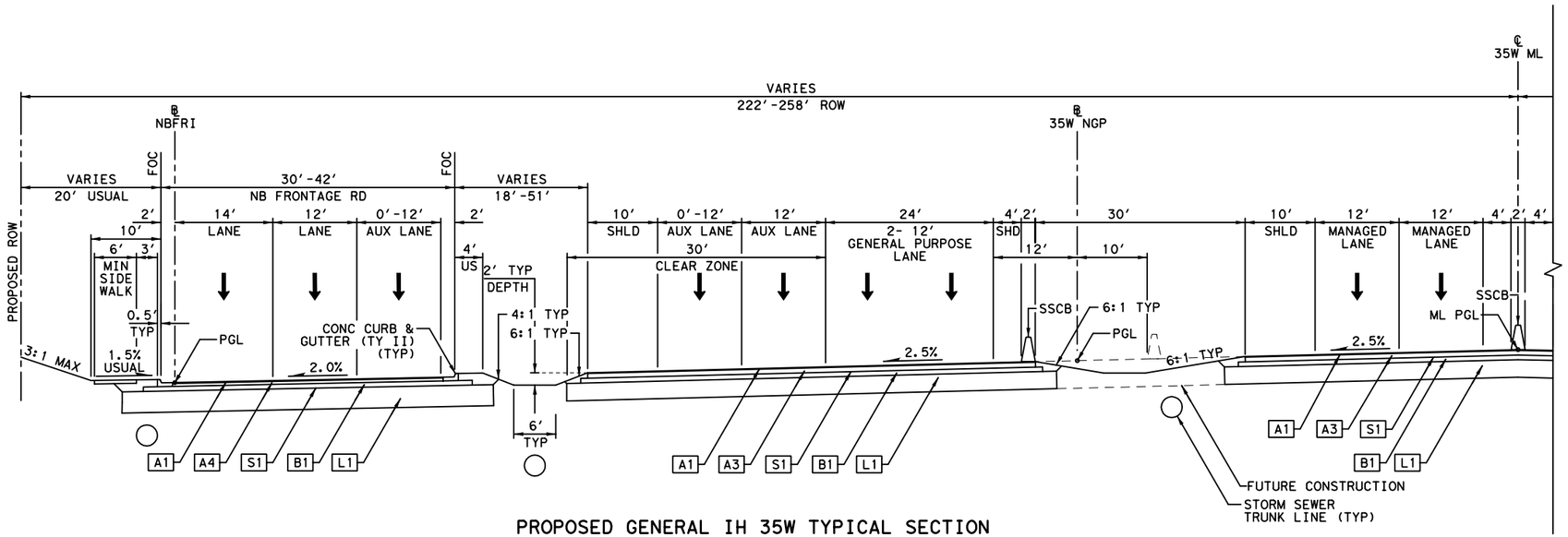

PROPOSED GENERAL IH 35W TYPICAL SECTION

℄ 35W ML STA 1543+00.00 TO STA 1590+00.00

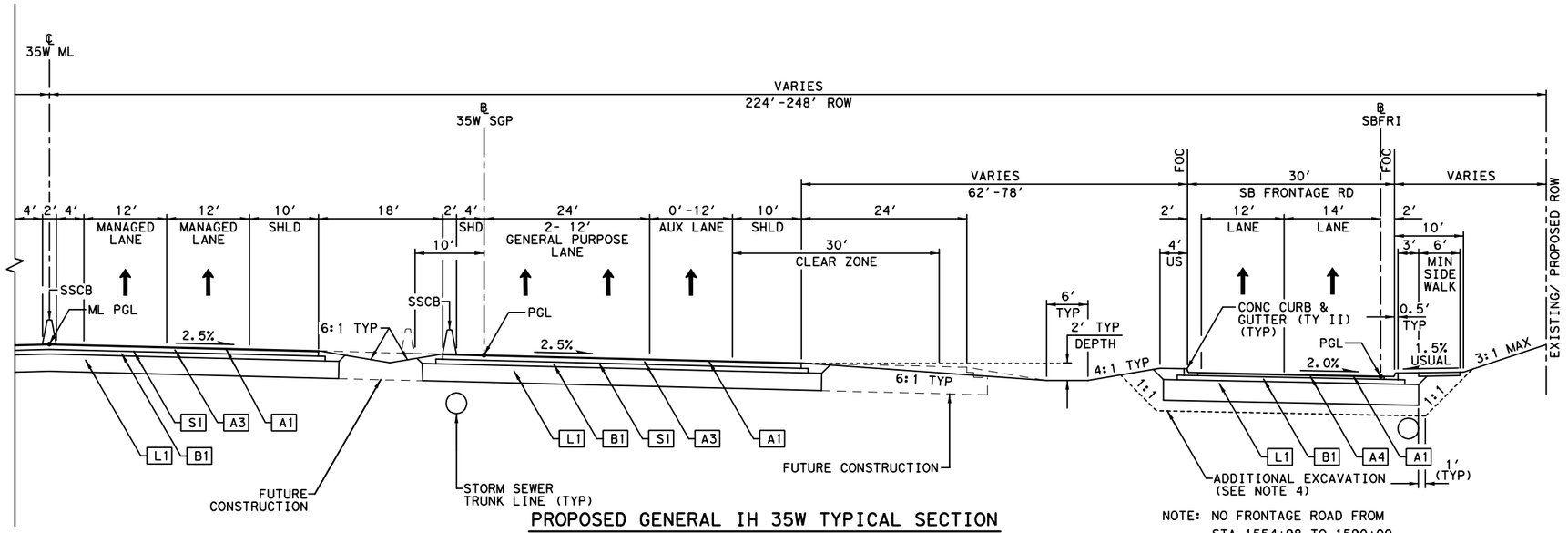

PROPOSED GENERAL IH 35W TYPICAL SECTION

℄ 35W ML STA 1543+00.00 TO STA 1590+00.00

NOTE: NO FRONTAGE ROAD FROM STA 1554+98 TO 1590+00

0' 10' 20'

SCALE IN FEET

LEGEND:

- A1 1.25" STONE MTRX-ASPH SMA-F SAC-B PG76-22
- A2 9" D-GR HMA(QCQA) TY-B PG64-22
- A3 10.5" D-GR HMA(QCQA) TY-B PG64-22
- A4 5" D-GR HMA(QCQA) TY-B PG64-22
- A5 6" D-GR HMA(QCQA) TY-B PG64-22
- A6 8" D-GR HMA(QCQA) TY-B PG64-22
- A7 D-GR HMA (QCQA) TY-D PG64-22 (LEVEL-UP)
- S1 PRIME COAT(EC-30)
- B1 FL BS (CMP IN PLC)(TY D GR 4)(FNAL POS)(8")
- B2 FL BS (CMP IN PLC)(TY D GR 4)(FNAL POS)(4")
- L1 LIME TRT (EXIST MATL)(18"-36") (SEE SHEET 55C FOR STATION RANGES & DEPTHS)

NOTES:

1. STATION LIMITS SHOWN ARE APPROXIMATE AND FOR NORMAL ROADWAY CONDITIONS. FOR WIDENINGS AND TRANSITIONS, SEE VARIOUS PLAN AND PROFILE SHEETS.
2. SEE TYPICAL SECTIONS MISCELLANEOUS DETAILS SHEET FOR PAVEMENT EDGE AND LIME TREATMENT EXTENSION DETAILS.
3. NORMAL CROSS SLOPES ARE TYPICALLY DISPLAYED. REFER TO ROADWAY PLAN & PROFILE SHEETS AND SUPERELEVATION DATA SHEET FOR ADDITIONAL INFORMATION.
4. SEE SHEET 55C FOR APPLICABLE STATION RANGES AND DEPTHS OF NON-SWELLING SELECT FILL MATERIAL (TY C1 EMBANKMENT).
5. REFER TO ROADWAY PLAN & PROFILE SHEETS FOR MBGF & BARRIER LOCATIONS.

STATE OF TEXAS
SYED S. HAQ
94660
LICENSED PROFESSIONAL ENGINEER

Syed S. Haq
08/22/2012

KENNEDY CONSULTING
TBPE REGISTRATION NO. F-926

Texas Department of Transportation
© 2012

IH 35W FROM NORTH TARRANT PKWY TO IH 820

TYPICAL SECTIONS
IH 35W GENERAL

SCALE 1" = 20'

SHEET 3 OF 3

DESIGN KCI	FED. RD. DIV. NO.	FEDERAL AID PROJECT NO.		HIGHWAY NO.
GRAPHICS KCI	6	(SEE TITLE SHEET)		IH 35W
CHECK KCI	STATE	DISTRICT	COUNTY	SHEET NO.
	TEXAS	FTW	TARRANT	26
CHECK KCI	CONTROL	SECTION	JOB	
	0014	16	255, ETC.	

FILENAME: S3BTYP09.dgn

DRAWING DATE: 8/22/2012

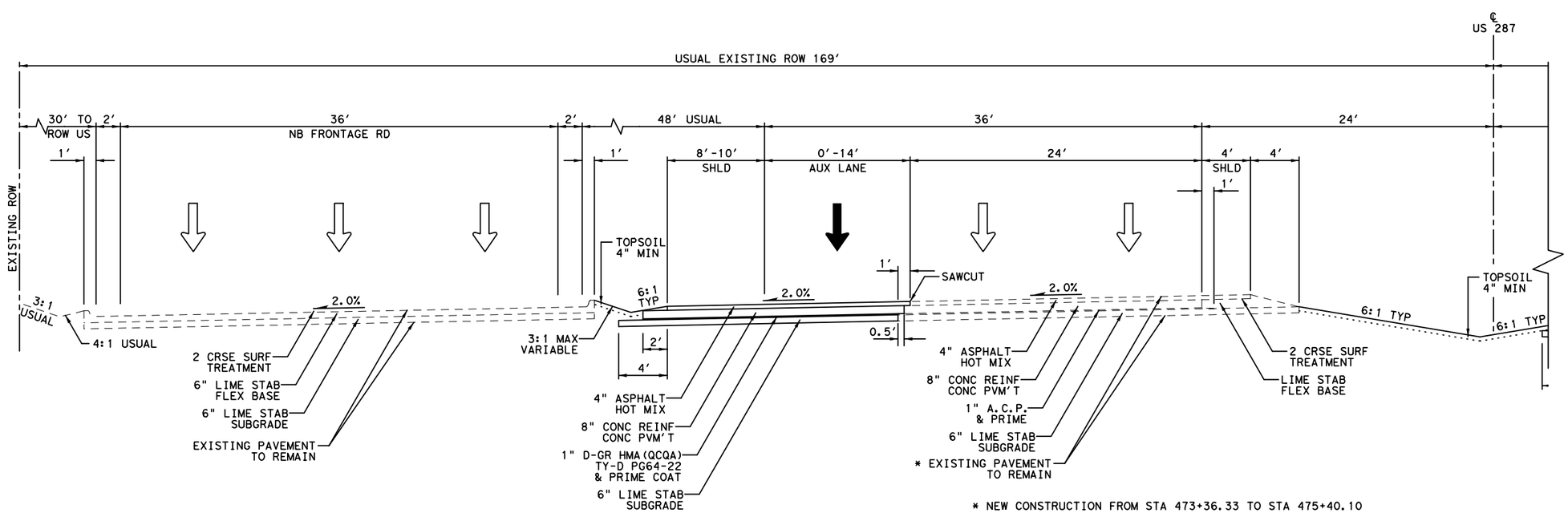

* NEW CONSTRUCTION FROM STA 473+36.33 TO STA 475+40.10

PROPOSED US 287 TYPICAL SECTION

℄ 287 STA 462+35.84 TO STA 475+40.10

0' 5' 10'

SCALE IN FEET

NOTES:

1. STATION LIMITS SHOWN ARE APPROXIMATE AND FOR NORMAL ROADWAY CONDITIONS. FOR WIDENINGS AND TRANSITIONS, SEE VARIOUS PLAN AND PROFILE SHEETS.
2. NORMAL CROSS SLOPES ARE TYPICALLY DISPLAYED. REFER TO ROADWAY PLAN & PROFILE SHEETS AND SUPERELEVATION DATASHEET FOR ADDITIONAL INFORMATION.

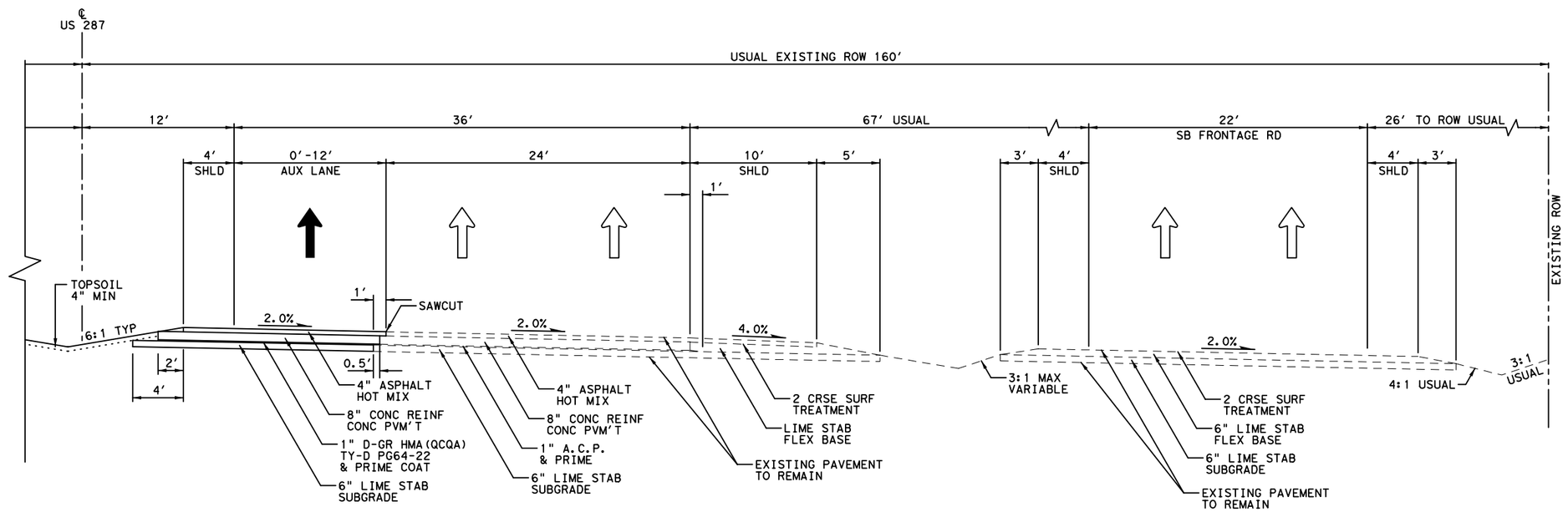

PROPOSED US 287 TYPICAL SECTION

℄ 287 STA 468+00.00 TO STA 481+65.48

STATE OF TEXAS
SYED S. HAQ
94660
LICENSED
PROFESSIONAL ENGINEER

08/29/2012

KENNEDY CONSULTING
TBPE REGISTRATION NO. F-926

Texas Department of Transportation
© 2012

IH 35W FROM NORTH TARRANT PKWY TO IH 820

TYPICAL SECTIONS

US 287 GENERAL

SCALE 1" = 10' SHEET 1 OF 1

DESIGN KCI	FED.RD. DIV.NO.	FEDERAL AID PROJECT NO.		HIGHWAY NO.
GRAPHICS KCI	6	(SEE TITLE SHEET)		IH 35W
	STATE	DISTRICT	COUNTY	SHEET NO.
CHECK KCI	TEXAS	FTW	TARRANT	27
	CONTROL	SECTION	JOB	
CHECK KCI	0014	16	255, ETC.	

FILENAME: S3BTYP10.dgn

DRAWING DATE: 8/29/2012

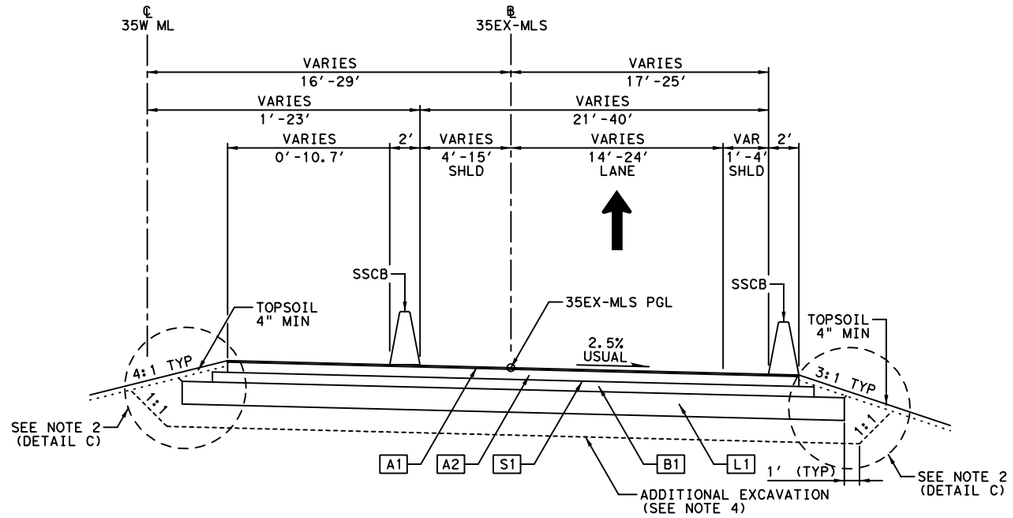

PROPOSED IH 35W ML INTERIM TRANSITION TYPICAL SECTION

SOUTHBOUND

℄ 35EX-MLS STA 5413+30.36 TO STA 5426+32.78

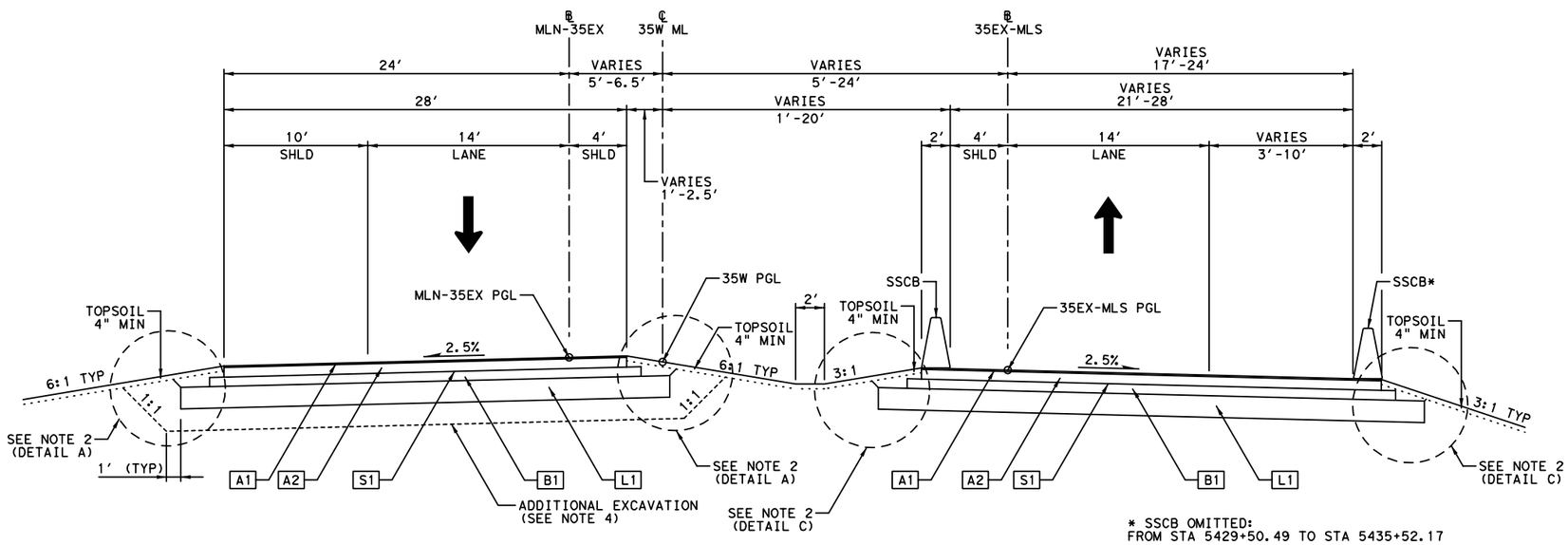

* SSCB OMITTED:
FROM STA 5429+50.49 TO STA 5435+52.17

PROPOSED IH 35W ML INTERIM TRANSITION TYPICAL SECTION

NORTHBOUND

℄ MLN-35EX STA 6423+46.21 TO STA 6425+93.76

SOUTHBOUND

℄ 35EX-MLS STA 5426+32.78 TO STA 5435+52.17

0' 5' 10'

SCALE IN FEET

LEGEND:

- A1 1.25" STONE MTRX-ASPH SMA-F SAC-B PG76-22
- A2 9" D-GR HMA(QCQA) TY-B PG64-22
- A3 10.5" D-GR HMA(QCQA) TY-B PG64-22
- A4 5" D-GR HMA(QCQA) TY-B PG64-22
- A5 6" D-GR HMA(QCQA) TY-B PG64-22
- A6 8" D-GR HMA(QCQA) TY-B PG64-22
- A7 D-GR HMA (QCQA) TY-D PG64-22 (LEVEL-UP)
- S1 PRIME COAT(EC-30)
- B1 FL BS (CMP IN PLC)(TY D GR 4)(FNAL POS)(8")
- B2 FL BS (CMP IN PLC)(TY D GR 4)(FNAL POS)(4")
- L1 LIME TRT (EXIST MATL)(18"-36") (SEE SHEET 55C FOR STATION RANGES & DEPTHS)

NOTES:

1. STATION LIMITS SHOWN ARE APPROXIMATE AND FOR NORMAL ROADWAY CONDITIONS. FOR WIDENINGS AND TRANSITIONS, SEE VARIOUS PLAN AND PROFILE SHEETS.
2. SEE TYPICAL SECTIONS MISCELLANEOUS DETAILS SHEET FOR PAVEMENT EDGE AND LIME TREATMENT EXTENSION DETAILS.
3. NORMAL CROSS SLOPES ARE TYPICALLY DISPLAYED. REFER TO ROADWAY PLAN & PROFILE SHEETS AND SUPERELEVATION DATA SHEET FOR ADDITIONAL INFORMATION.
4. SEE SHEET 55C FOR APPLICABLE STATION RANGES AND DEPTHS OF NON-SWELLING SELECT FILL MATERIAL (TY C1 EMBANKMENT).
5. REFER TO ROADWAY PLAN & PROFILE SHEETS FOR MBGF & BARRIER LOCATIONS.

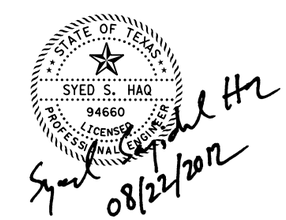

KENNEDY CONSULTING
TBPE REGISTRATION NO. F-926

Texas Department of Transportation

© 2012

IH 35W FROM NORTH TARRANT PKWY TO IH 820

TYPICAL SECTIONS

IH 35W MAINLANES

(MANAGED LANES)

SCALE 1" = 10' SHEET 1 OF 4

DESIGN KCI	FED.RD. DIV.NO.	FEDERAL AID PROJECT NO.		HIGHWAY NO.
GRAPHICS KCI	6	(SEE TITLE SHEET)		IH 35W
CHECK KCI	STATE	DISTRICT	COUNTY	SHEET NO.
	TEXAS	FTW	TARRANT	28
CHECK KCI	CONTROL	SECTION	JOB	
	0014	16	255, ETC.	

FILENAME: S3BTYP11.dgn

DRAWING DATE: 8/22/2012

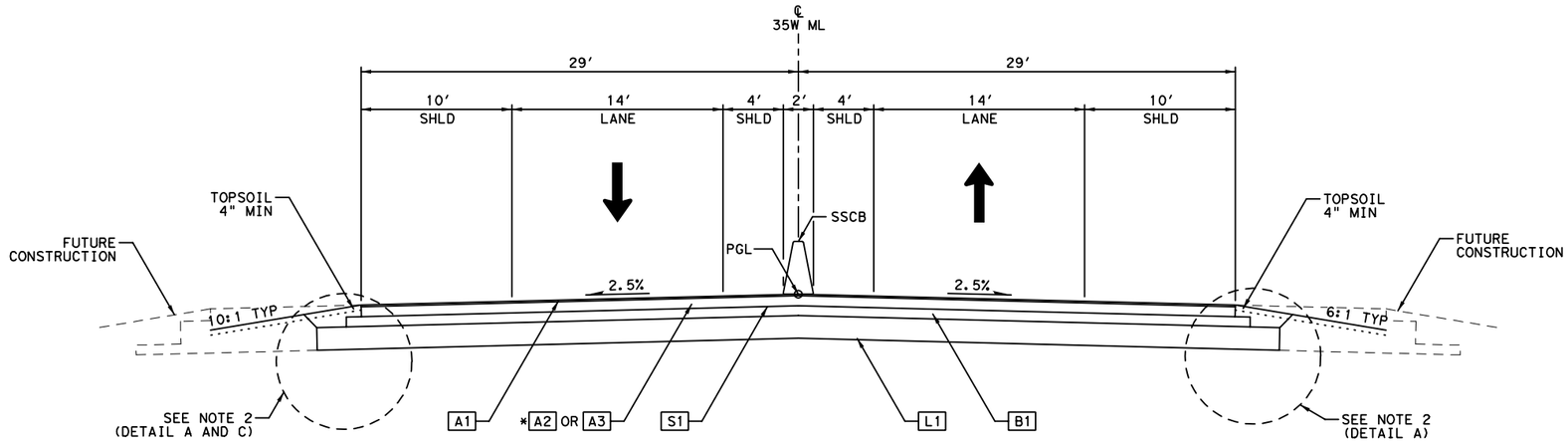

*A2 FROM STA 1435+50.92 TO STA 1451+00.00

A3 FROM STA 1451+00.00 TO STA 1469+02.77

PROPOSED IH 35W ML TYPICAL SECTION

NORTHBOUND
℄ 35W ML STA 1425+93.71 TO STA 1470+54.47

SOUTHBOUND
℄ 35W ML STA 1435+50.92 TO STA 1470+38.55

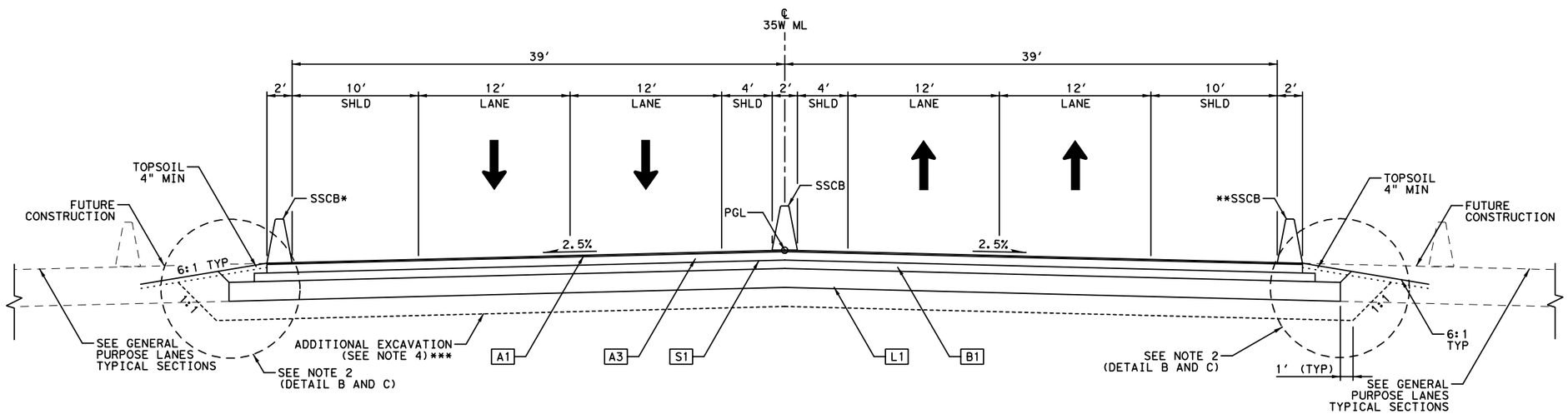

PROPOSED IH 35W ML TYPICAL SECTION

NORTHBOUND
℄ 35W ML STA 1470+54.47 TO STA 1528+66.56
℄ 35W ML STA 1533+18.56 TO STA 1536+37.10
℄ 35W ML STA 1546+44.06 TO STA 1583+30.53

SOUTHBOUND
℄ 35W ML STA 1470+38.55 TO STA 1524+95.09
℄ 35W ML STA 1529+43.09 TO STA 1535+98.36
℄ 35W ML STA 1546+00.12 TO STA 1581+00.00

REFER TO PLAN & PROFILE SHEETS FOR LIMITS OF BRIDGE

* SSCB OMITTED:
FROM STA 1533+83.19 TO STA 1536+37.10
FROM STA 1546+44.06 TO STA 1583+30.53

*** FROM STA 1474+00 TO STA 1476+00
FROM STA 1532+00 TO STA 1536+37
FROM STA 1546+00 TO STA 1548+00

** SSCB OMITTED:
FROM STA 1470+38.55 TO STA 1480+34.24
FROM STA 1531+07.89 TO STA 1536+37.10
FROM STA 1546+00.12 TO STA 1581+00.00

0′ 5′ 10′
SCALE IN FEET

LEGEND:

- A1 1.25" STONE MTRX-ASPH SMA-F SAC-B PG76-22
- A2 9" D-GR HMA(QCQA) TY-B PG64-22
- A3 10.5" D-GR HMA(QCQA) TY-B PG64-22
- A4 5" D-GR HMA(QCQA) TY-B PG64-22
- A5 6" D-GR HMA(QCQA) TY-B PG64-22
- A6 8" D-GR HMA(QCQA) TY-B PG64-22
- A7 D-GR HMA (QCQA) TY-D PG64-22 (LEVEL-UP)
- S1 PRIME COAT(EC-30)
- B1 FL BS (CMP IN PLC)(TY D GR 4)(FNAL POS)(8")
- B2 FL BS (CMP IN PLC)(TY D GR 4)(FNAL POS)(4")
- L1 LIME TRT (EXIST MATL)(18"-36") (SEE SHEET 55C FOR STATION RANGES & DEPTHS)

NOTES:

1. STATION LIMITS SHOWN ARE APPROXIMATE AND FOR NORMAL ROADWAY CONDITIONS. FOR WIDENINGS AND TRANSITIONS, SEE VARIOUS PLAN AND PROFILE SHEETS.
2. SEE TYPICAL SECTIONS MISCELLANEOUS DETAILS SHEET FOR PAVEMENT EDGE AND LIME TREATMENT EXTENSION DETAILS.
3. NORMAL CROSS SLOPES ARE TYPICALLY DISPLAYED. REFER TO ROADWAY PLAN & PROFILE SHEETS AND SUPERELEVATION DATA SHEET FOR ADDITIONAL INFORMATION.
4. SEE SHEET 55C FOR APPLICABLE STATION RANGES AND DEPTHS OF NON-SWELLING SELECT FILL MATERIAL (TY C1 EMBANKMENT).
5. REFER TO ROADWAY PLAN & PROFILE SHEETS FOR MBGF & BARRIER LOCATIONS.

STATE OF TEXAS
SYED S. HAQ
94660
LICENSED
PROFESSIONAL ENGINEER
Syed S. Haq
08/22/2012

KENNEDY CONSULTING
TBPE REGISTRATION NO. F-926

Texas Department of Transportation
© 2012

IH 35W FROM NORTH TARRANT PKWY TO IH 820

TYPICAL SECTIONS
IH 35W MAINLANES
(MANAGED LANES)

SCALE 1" = 10′

DESIGN	FED. RD. DIV. NO.	FEDERAL AID PROJECT NO.		HIGHWAY NO.
KCI	6	(SEE TITLE SHEET)		IH 35W
GRAPHICS KCI	STATE	DISTRICT	COUNTY	SHEET NO.
CHECK KCI	TEXAS	FTW	TARRANT	29
CHECK	CONTROL	SECTION	JOB	
KCI	0014	16	255, ETC.	

FILENAME: S38TYP12.dgn
DRAWING DATE: 8/22/2012

0′ 5′ 10′

SCALE IN FEET

LEGEND:

- A1 1.25" STONE MTRX-ASPH SMA-F SAC-B PG76-22
- A2 9" D-GR HMA(QCQA) TY-B PG64-22
- A3 10.5" D-GR HMA(QCQA) TY-B PG64-22
- A4 5" D-GR HMA(QCQA) TY-B PG64-22
- A5 6" D-GR HMA(QCQA) TY-B PG64-22
- A6 8" D-GR HMA(QCQA) TY-B PG64-22
- A7 D-GR HMA (QCQA) TY-D PG64-22 (LEVEL-UP)
- S1 PRIME COAT(EC-30)
- B1 FL BS (CMP IN PLC)(TY D GR 4)(FNAL POS)(8")
- B2 FL BS (CMP IN PLC)(TY D GR 4)(FNAL POS)(4")
- L1 LIME TRT (EXIST MATL)(18"-36") (SEE SHEET 55C FOR STATION RANGES & DEPTHS)

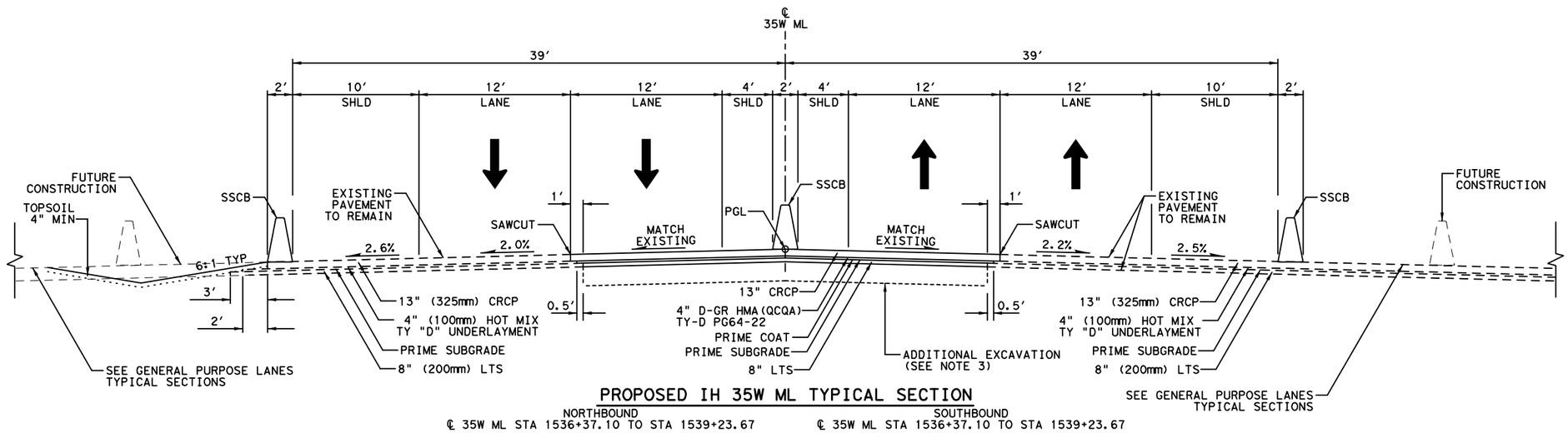

PROPOSED IH 35W ML TYPICAL SECTION

NORTHBOUND
℄ 35W ML STA 1536+37.10 TO STA 1539+23.67

SOUTHBOUND
℄ 35W ML STA 1536+37.10 TO STA 1539+23.67

NOTES:

1. STATION LIMITS SHOWN ARE APPROXIMATE AND FOR NORMAL ROADWAY CONDITIONS. FOR WIDENINGS AND TRANSITIONS, SEE VARIOUS PLAN AND PROFILE SHEETS.
2. NORMAL CROSS SLOPES ARE TYPICALLY DISPLAYED. REFER TO ROADWAY PLAN & PROFILE SHEETS AND SUPERELEVATION DATA SHEET FOR ADDITIONAL INFORMATION.
3. PROVIDE NON-SWELLING SELECT FILL MATERIAL. SEE SHEET 55C FOR STATION RANGE AND DEPTH. THE DEPTH IS MEASURED FROM THE BOTTOM OF FLEXIBLE BASE.
4. REFER TO ROADWAY PLAN & PROFILE SHEETS FOR MBGF & BARRIER LOCATIONS.

STATE OF TEXAS
SYED S. HAQ
94660
LICENSED
PROFESSIONAL ENGINEER

Syed S. Haq
08/22/2012

KENNEDY CONSULTING
TBPE REGISTRATION NO. F-926

Texas Department of Transportation
© 2012

IH 35W FROM NORTH TARRANT PKWY TO IH 820

TYPICAL SECTIONS

IH 35W MAINLANES

(MANAGED LANES)

SCALE 1" = 10′ SHEET 3 OF 4

DESIGN	FED. RD. DIV. NO.	FEDERAL AID PROJECT NO.		HIGHWAY NO.
KCI	6	(SEE TITLE SHEET)		IH 35W
GRAPHICS	STATE	DISTRICT	COUNTY	SHEET NO.
KCI	TEXAS	FTW	TARRANT	30
CHECK	CONTROL	SECTION	JOB	
KCI	0014	16	255, ETC.	

DRAWING DATE: 8/22/2012 FILENAME: S38TYP12A.dgn

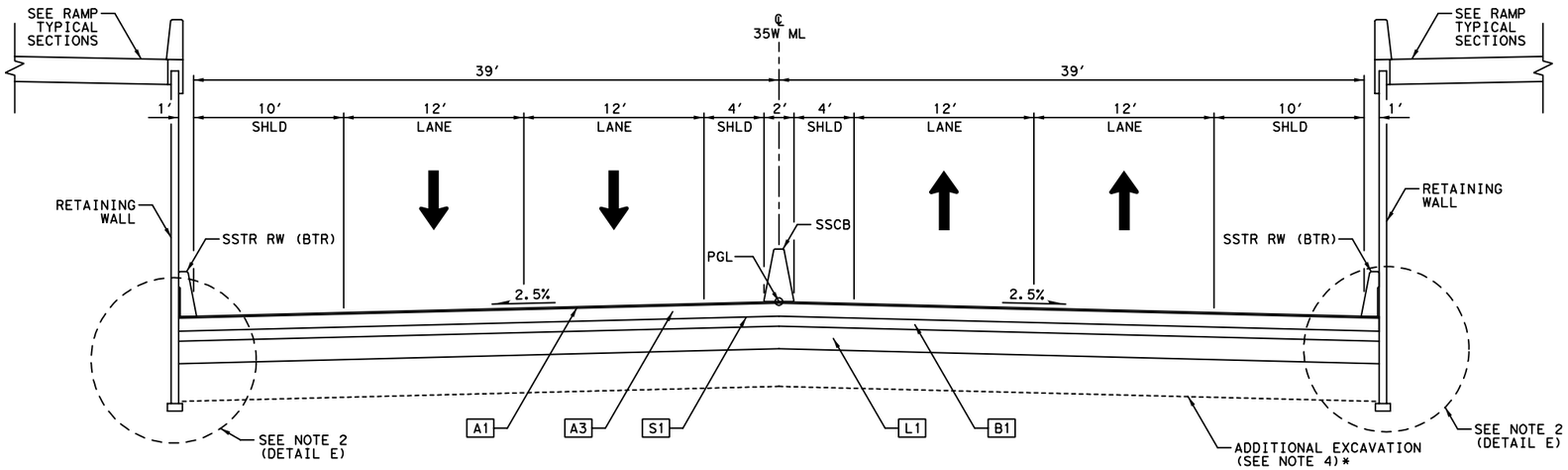

PROPOSED IH 35W ML TYPICAL SECTION

NORTHBOUND
℄ 35W ML STA 1528+66.56 TO STA 1533+18.56

SOUTHBOUND
℄ 35W ML STA 1524+95.09 TO STA 1529+43.09

* FROM STA 1532+00 TO STA 1533+19

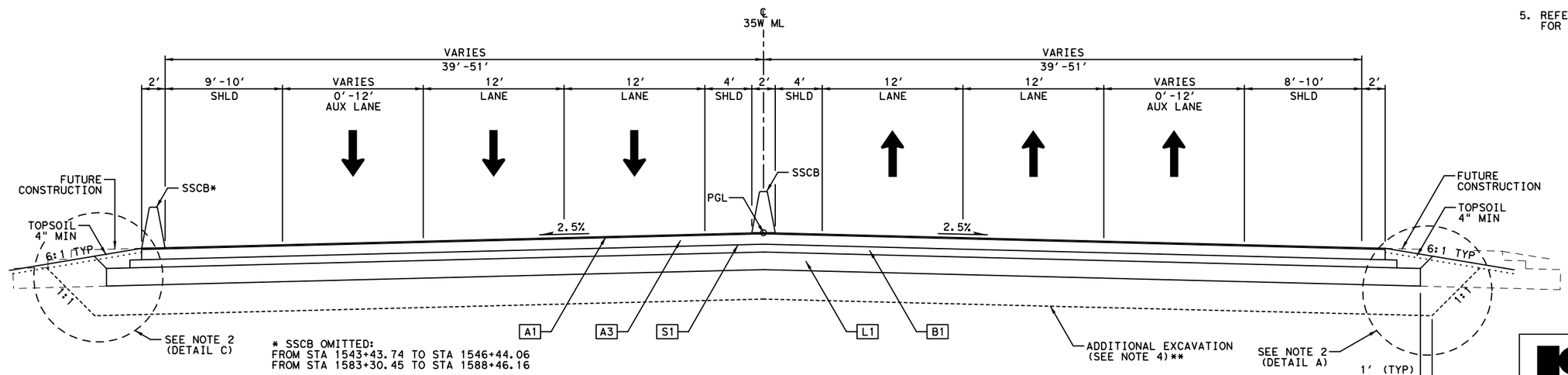

* SSCB OMITTED:
FROM STA 1543+43.74 TO STA 1546+44.06
FROM STA 1583+30.45 TO STA 1588+46.16

PROPOSED IH 35W ML TYPICAL SECTION

NORTHBOUND
℄ 35W ML STA 1542+37.09 TO STA 1546+44.06
℄ 35W ML STA 1583+30.45 TO STA 1590+00.00

SOUTHBOUND
℄ 35W ML STA 1542+37.09 TO STA 1546+00.12
℄ 35W ML STA 1581+00.00 TO STA 1590+00.00

REFER TO PLAN & PROFILE SHEETS FOR LIMITS OF BRIDGE

** FROM STA 1542+37 TO STA 1546+44

0′ 5′ 10′
SCALE IN FEET

LEGEND:

- A1 1.25" STONE MTRX-ASPH SMA-F SAC-B PG76-22
- A2 9" D-GR HMA(QCQA) TY-B PG64-22
- A3 10.5" D-GR HMA(QCQA) TY-B PG64-22
- A4 5" D-GR HMA(QCQA) TY-B PG64-22
- A5 6" D-GR HMA(QCQA) TY-B PG64-22
- A6 8" D-GR HMA(QCQA) TY-B PG64-22
- A7 D-GR HMA (QCQA) TY-D PG64-22 (LEVEL-UP)
- S1 PRIME COAT(EC-30)
- B1 FL BS (CMP IN PLC)(TY D GR 4)(FNAL POS)(8")
- B2 FL BS (CMP IN PLC)(TY D GR 4)(FNAL POS)(4")
- L1 LIME TRT (EXIST MATL)(18"-36") (SEE SHEET 55C FOR STATION RANGES & DEPTHS)

NOTES:

1. STATION LIMITS SHOWN ARE APPROXIMATE AND FOR NORMAL ROADWAY CONDITIONS. FOR WIDENINGS AND TRANSITIONS, SEE VARIOUS PLAN AND PROFILE SHEETS.
2. SEE TYPICAL SECTIONS MISCELLANEOUS DETAILS SHEET FOR PAVEMENT EDGE AND LIME TREATMENT EXTENSION DETAILS.
3. NORMAL CROSS SLOPES ARE TYPICALLY DISPLAYED. REFER TO ROADWAY PLAN & PROFILE SHEETS AND SUPERELEVATION DATA SHEET FOR ADDITIONAL INFORMATION.
4. SEE SHEET 55C FOR APPLICABLE STATION RANGES AND DEPTHS OF NON-SWELLING SELECT FILL MATERIAL (TY C1 EMBANKMENT).
5. REFER TO ROADWAY PLAN & PROFILE SHEETS FOR MBGF & BARRIER LOCATIONS.

STATE OF TEXAS
SYED S. HAQ
94660
LICENSED
PROFESSIONAL ENGINEER
Syed S. Haq
08/22/2012

KENNEDY CONSULTING
TBPE REGISTRATION NO. F-926

Texas Department of Transportation
© 2012

IH 35W FROM NORTH TARRANT PKWY TO IH 820

TYPICAL SECTIONS
IH 35W MAINLANES
(MANAGED LANES)

SCALE 1" = 10′ SHEET 4 OF 4

DESIGN	FED.RD. DIV.NO.	FEDERAL AID PROJECT NO.		HIGHWAY NO.
KCI	6	(SEE TITLE SHEET)		IH 35W
GRAPHICS KCI	STATE	DISTRICT	COUNTY	SHEET NO.
CHECK KCI	TEXAS	FTW	TARRANT	31
CHECK KCI	CONTROL	SECTION	JOB	
	0014	16	255, ETC.	

FILENAME: S3BTYP13.dgn
DRAWING DATE: 8/22/2012

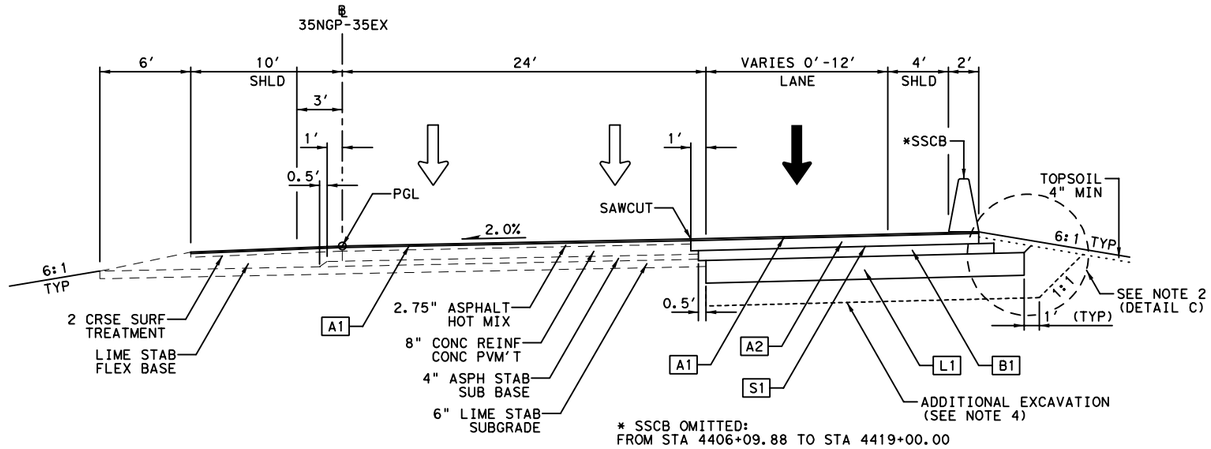

PROPOSED IH 35W NGP INTERIM TRANSITION TYPICAL SECTION

℄ 35NGP-35EX STA 4401+00.00 TO STA 4419+00.00

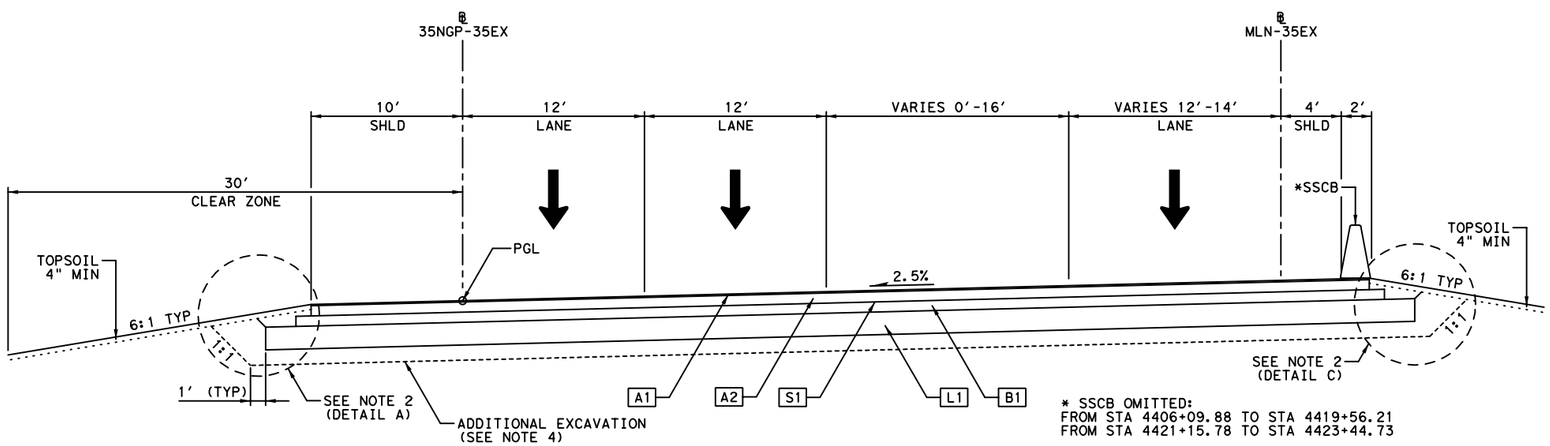

PROPOSED IH 35W NGP INTERIM TRANSITION TYPICAL SECTION

℄ 35W NGP-35EX STA 4419+00.00 TO STA 4423+44.73

0′ 5′ 10′

SCALE IN FEET

LEGEND:

- A1 1.25" STONE MTRX-ASPH SMA-F SAC-B PG76-22
- A2 9" D-GR HMA(QCQA) TY-B PG64-22
- A3 10.5" D-GR HMA(QCQA) TY-B PG64-22
- A4 5" D-GR HMA(QCQA) TY-B PG64-22
- A5 6" D-GR HMA(QCQA) TY-B PG64-22
- A6 8" D-GR HMA(QCQA) TY-B PG64-22
- A7 D-GR HMA (QCQA) TY-D PG64-22 (LEVEL-UP)
- S1 PRIME COAT(EC-30)
- B1 FL BS (CMP IN PLC)(TY D GR 4)(FNAL POS)(8")
- B2 FL BS (CMP IN PLC)(TY D GR 4)(FNAL POS)(4")
- L1 LIME TRT (EXIST MATL)(18"-36") (SEE SHEET 55C FOR STATION RANGES & DEPTHS)

NOTES:

1. STATION LIMITS SHOWN ARE APPROXIMATE AND FOR NORMAL ROADWAY CONDITIONS. FOR WIDENINGS AND TRANSITIONS, SEE VARIOUS PLAN AND PROFILE SHEETS.
2. SEE TYPICAL SECTIONS MISCELLANEOUS DETAILS SHEET FOR PAVEMENT EDGE AND LIME TREATMENT EXTENSION DETAILS.
3. NORMAL CROSS SLOPES ARE TYPICALLY DISPLAYED. REFER TO ROADWAY PLAN & PROFILE SHEETS AND SUPERELEVATION DATA SHEET FOR ADDITIONAL INFORMATION.
4. SEE SHEET 55C FOR APPLICABLE STATION RANGES AND DEPTHS OF NON-SWELLING SELECT FILL MATERIAL (TY C1 EMBANKMENT).
5. REFER TO ROADWAY PLAN & PROFILE SHEETS FOR MBGF & BARRIER LOCATIONS.

STATE OF TEXAS
SYED S. HAQ
94660
LICENSED
PROFESSIONAL ENGINEER
08/22/2012

KENNEDY CONSULTING
TBPE REGISTRATION NO. F-926

Texas Department of Transportation
© 2012

IH 35W FROM NORTH TARRANT PKWY TO IH 820

TYPICAL SECTIONS

IH 35W MAINLANES

(GENERAL PURPOSE LANES)

SCALE 1" = 10′ SHEET 1 OF 8

DESIGN	FED.RD. DIV.NO.	FEDERAL AID PROJECT NO.		HIGHWAY NO.
KCI	6	(SEE TITLE SHEET)		IH 35W
GRAPHICS KCI	STATE	DISTRICT	COUNTY	SHEET NO.
CHECK KCI	TEXAS	FTW	TARRANT	32
CHECK KCI	CONTROL 0014	SECTION 16	JOB 255, ETC.	

FILENAME: S3BTYP14.dgn

DRAWING DATE: 8/22/2012

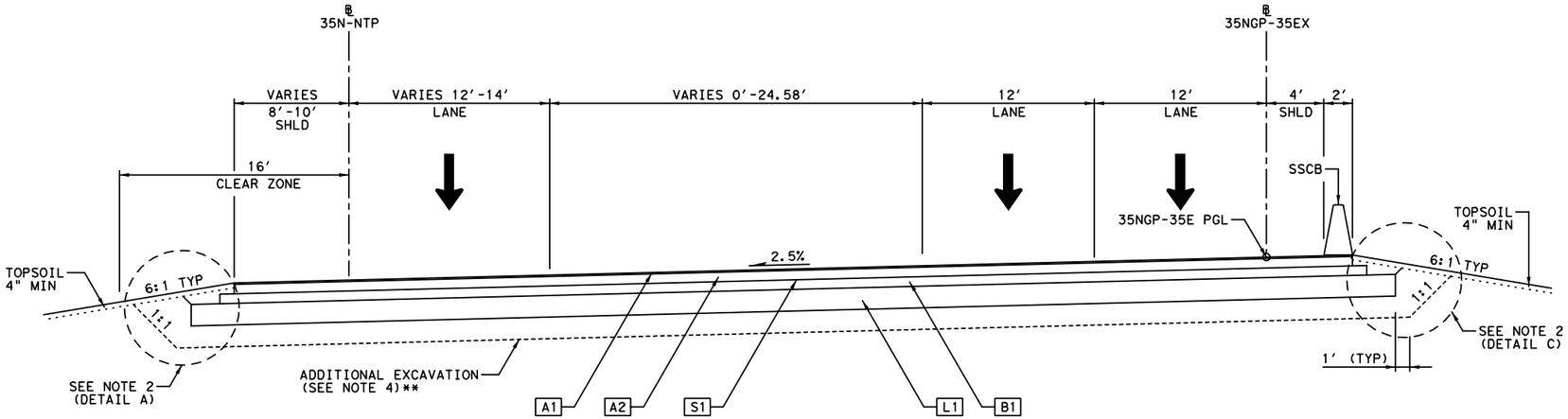

** ℄ 35NGP-35EX STA 4423+44 TO STA 4425+98

PROPOSED IH 35W NGP INTERIM TRANSITION TYPICAL SECTION

℄ 35NGP-35EX STA 4423+44.73 TO STA 4431+32.20

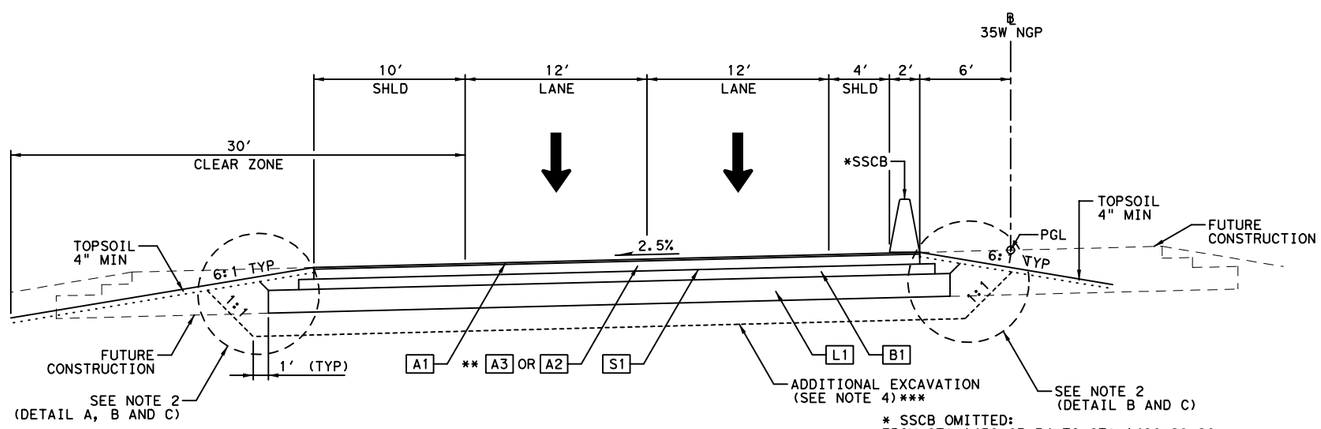

** A2 ℄ 35W NGP BEGIN LIMIT TO STA 1450+64.02

A3 ℄ 35W NGP STA 1450+64.02 TO STA 1486+20.26
℄ 35W NGP STA 1513+26.11 TO STA 1527+49.78

PROPOSED IH 35W NGP TYPICAL SECTION

℄ 35W NGP STA 1437+92.67 TO STA 1486+20.26
℄ 35W NGP STA 1513+26.11 TO STA 1527+49.78

* SSCB OMITTED:
FROM STA 1458+63.34 TO STA 1486+20.26
FROM STA 1513+26.11 TO STA 1520+34.25

*** ℄ 35W NGP STA 1473+65 TO STA 1475+65

0' 5' 10'
SCALE IN FEET

LEGEND:

- A1 1.25" STONE MTRX-ASPH SMA-F SAC-B PG76-22
- A2 9" D-GR HMA(QCQA) TY-B PG64-22
- A3 10.5" D-GR HMA(QCQA) TY-B PG64-22
- A4 5" D-GR HMA(QCQA) TY-B PG64-22
- A5 6" D-GR HMA(QCQA) TY-B PG64-22
- A6 8" D-GR HMA(QCQA) TY-B PG64-22
- A7 D-GR HMA (QCQA) TY-D PG64-22 (LEVEL-UP)
- S1 PRIME COAT(EC-30)
- B1 FL BS (CMP IN PLC)(TY D GR 4)(FNAL POS)(8")
- B2 FL BS (CMP IN PLC)(TY D GR 4)(FNAL POS)(4")
- L1 LIME TRT (EXIST MATL)(18"-36") (SEE SHEET 55C FOR STATION RANGES & DEPTHS)

NOTES:

1. STATION LIMITS SHOWN ARE APPROXIMATE AND FOR NORMAL ROADWAY CONDITIONS. FOR WIDENINGS AND TRANSITIONS, SEE VARIOUS PLAN AND PROFILE SHEETS.
2. SEE TYPICAL SECTIONS MISCELLANEOUS DETAILS SHEET FOR PAVEMENT EDGE AND LIME TREATMENT EXTENSION DETAILS.
3. NORMAL CROSS SLOPES ARE TYPICALLY DISPLAYED. REFER TO ROADWAY PLAN & PROFILE SHEETS AND SUPERELEVATION DATA SHEET FOR ADDITIONAL INFORMATION.
4. SEE SHEET 55C FOR APPLICABLE STATION RANGES AND DEPTHS OF NON-SWELLING SELECT FILL MATERIAL (TY C1 EMBANKMENT).
5. REFER TO ROADWAY PLAN & PROFILE SHEETS FOR MBGF & BARRIER LOCATIONS.

STATE OF TEXAS
SYED S. HAQ
94660
LICENSED
PROFESSIONAL ENGINEER
Syed S. Haq
08/22/2012

KENNEDY CONSULTING
TBPE REGISTRATION NO. F-926

Texas Department of Transportation
© 2012

IH 35W FROM NORTH TARRANT PKWY TO IH 820

TYPICAL SECTIONS
IH 35W MAINLANES
(GENERAL PURPOSE LANES)

SCALE 1" = 10' SHEET 2 OF 8

DESIGN	FED.RD. DIV.NO.	FEDERAL AID PROJECT NO.		HIGHWAY NO.
KCI	6	(SEE TITLE SHEET)		IH 35W
GRAPHICS KCI	STATE	DISTRICT	COUNTY	SHEET NO.
CHECK KCI	TEXAS	FTW	TARRANT	33
CHECK KCI	CONTROL 0014	SECTION 16	JOB 255, ETC.	

FILENAME: S3BTYP15.dgn
DRAWING DATE: 8/22/2012

0′ 5′ 10′

SCALE IN FEET

LEGEND:

- A1 1.25" STONE MTRX-ASPH SMA-F SAC-B PG76-22
- A2 9" D-GR HMA(QCQA) TY-B PG64-22
- A3 10.5" D-GR HMA(QCQA) TY-B PG64-22
- A4 5" D-GR HMA(QCQA) TY-B PG64-22
- A5 6" D-GR HMA(QCQA) TY-B PG64-22
- A6 8" D-GR HMA(QCQA) TY-B PG64-22
- A7 D-GR HMA (QCQA) TY-D PG64-22 (LEVEL-UP)
- S1 PRIME COAT(EC-30)
- B1 FL BS (CMP IN PLC)(TY D GR 4)(FNAL POS)(8")
- B2 FL BS (CMP IN PLC)(TY D GR 4)(FNAL POS)(4")
- L1 LIME TRT (EXIST MATL)(18"-36") (SEE SHEET 55C FOR STATION RANGES & DEPTHS)

NOTES:

1. STATION LIMITS SHOWN ARE APPROXIMATE AND FOR NORMAL ROADWAY CONDITIONS. FOR WIDENINGS AND TRANSITIONS, SEE VARIOUS PLAN AND PROFILE SHEETS.
2. SEE TYPICAL SECTIONS MISCELLANEOUS DETAILS SHEET FOR PAVEMENT EDGE AND LIME TREATMENT EXTENSION DETAILS.
3. NORMAL CROSS SLOPES ARE TYPICALLY DISPLAYED. REFER TO ROADWAY PLAN & PROFILE SHEETS AND SUPERELEVATION DATA SHEET FOR ADDITIONAL INFORMATION.
4. SEE SHEET 55C FOR APPLICABLE STATION RANGES AND DEPTHS OF NON-SWELLING SELECT FILL MATERIAL (TY C1 EMBANKMENT).
5. REFER TO ROADWAY PLAN & PROFILE SHEETS FOR MBGF & BARRIER LOCATIONS.

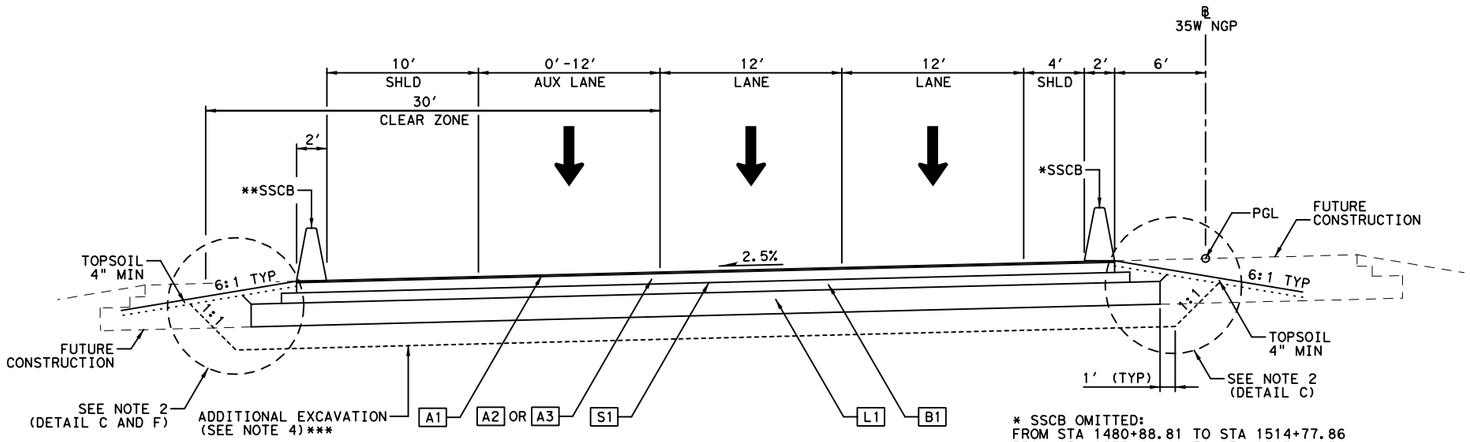

** SSCB OMITTED:
FROM STA 1430+94.37 TO STA 1437+92.77
FROM STA 1480+88.81 TO STA 1496+06.73
FROM STA 1500+28.76 TO STA 1514+77.86
FROM STA 1533+57.30 TO STA 1536+24.18
FROM STA 1538+32.66 TO STA 1544+99.26

*** ℄ 35W NGP STA 1531+57 TO STA 1546+07

PROPOSED IH 35W NGP TYPICAL SECTION

℄ 35W NGP STA 1430+94.37 TO STA 1437+92.67
℄ 35W NGP STA 1486+20.26 TO STA 1513+26.11
℄ 35W NGP STA 1527+49.78 TO STA 1546+06.56

REFER TO PLAN & PROFILE SHEETS FOR LIMITS OF BRIDGE

* SSCB OMITTED:
FROM STA 1480+88.81 TO STA 1514+77.86
FROM STA 1533+40.68 TO STA 1543+00.58

A2 ℄ 35W ML STA 1430+94.37 TO STA 1437+92.77

A3 ℄ 35W ML STA 1486+20.26 TO STA 1513+26.11
℄ 35W ML STA 1527+49.70 TO STA 1546+06.56

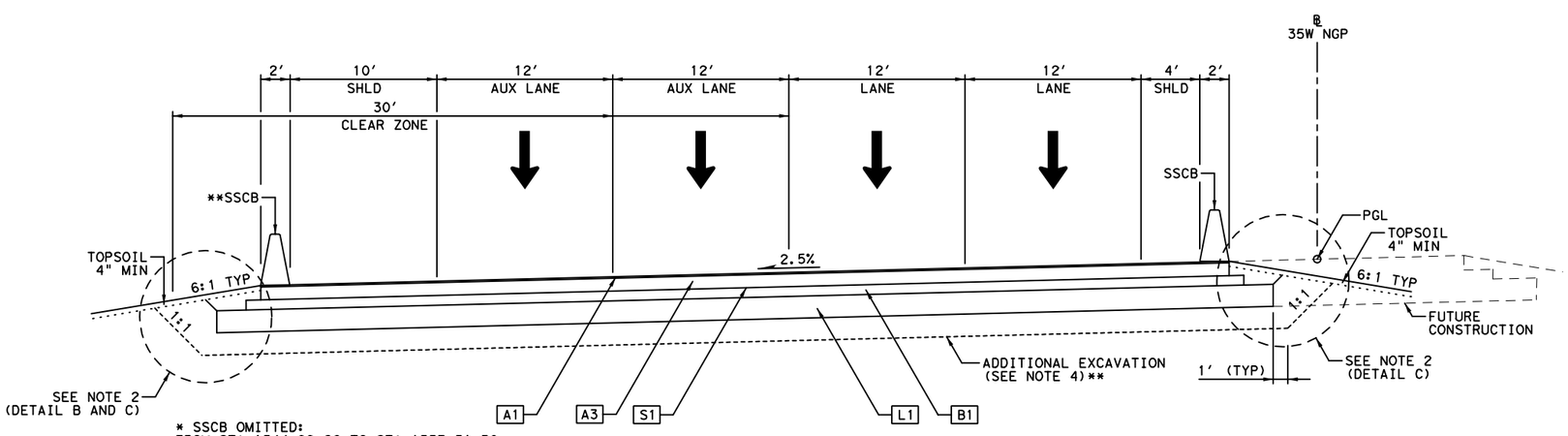

* SSCB OMITTED:
FROM STA 1544+99.26 TO STA 1557+51.30
FROM STA 1565+09.92 TO STA 1589+68.17

** ℄ 35W NGP STA 1546+07 TO STA 1547+57

PROPOSED IH 35W NGP TYPICAL SECTION

℄ 35W NGP STA 1546+06.56 TO STA 1589+68.17

STATE OF TEXAS
SYED S. HAQ
94660
LICENSED
PROFESSIONAL ENGINEER

08/22/2012

KENNEDY CONSULTING
TBPE REGISTRATION NO. F-926

Texas Department of Transportation
© 2012

IH 35W FROM NORTH TARRANT PKWY TO IH 820

TYPICAL SECTIONS

IH 35W MAINLANES

(GENERAL PURPOSE LANES)

SCALE 1" = 10′ SHEET 3 OF 8

DESIGN	FED.RD. DIV.NO.	FEDERAL AID PROJECT NO.		HIGHWAY NO.
KCI	6	(SEE TITLE SHEET)		IH 35W
GRAPHICS	STATE	DISTRICT	COUNTY	SHEET NO.
KCI	TEXAS	FTW	TARRANT	34
CHECK	CONTROL	SECTION	JOB	
KCI	0014	16	255, ETC.	

FILENAME: S3BTYP16.dgn

DRAWING DATE: 8/22/2012

0′ 5′ 10′

SCALE IN FEET

LEGEND:

- A1 1.25" STONE MTRX-ASPH SMA-F SAC-B PG76-22
- A2 9" D-GR HMA(QCQA) TY-B PG64-22
- A3 10.5" D-GR HMA(QCQA) TY-B PG64-22
- A4 5" D-GR HMA(QCQA) TY-B PG64-22
- A5 6" D-GR HMA(QCQA) TY-B PG64-22
- A6 8" D-GR HMA(QCQA) TY-B PG64-22
- A7 D-GR HMA (QCQA) TY-D PG64-22 (LEVEL-UP)
- S1 PRIME COAT(EC-30)
- B1 FL BS (CMP IN PLC)(TY D GR 4)(FNAL POS)(8")
- B2 FL BS (CMP IN PLC)(TY D GR 4)(FNAL POS)(4")
- L1 LIME TRT (EXIST MATL)(18"-36") (SEE SHEET 55C FOR STATION RANGES & DEPTHS)

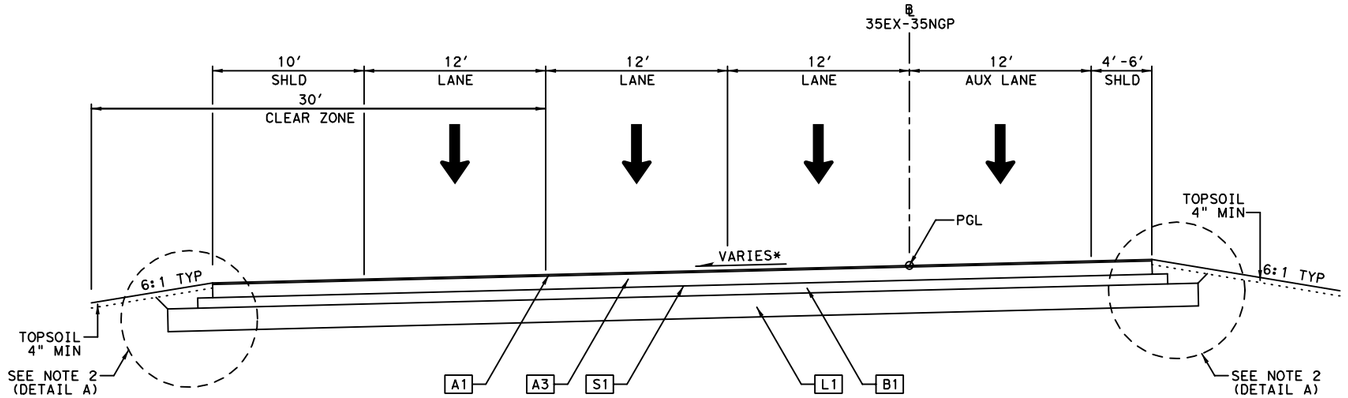

PROPOSED IH 35W NGP TYPICAL SECTION

℄ 35EX-35NGP STA 4590+00.00 TO STA 4595+00.00

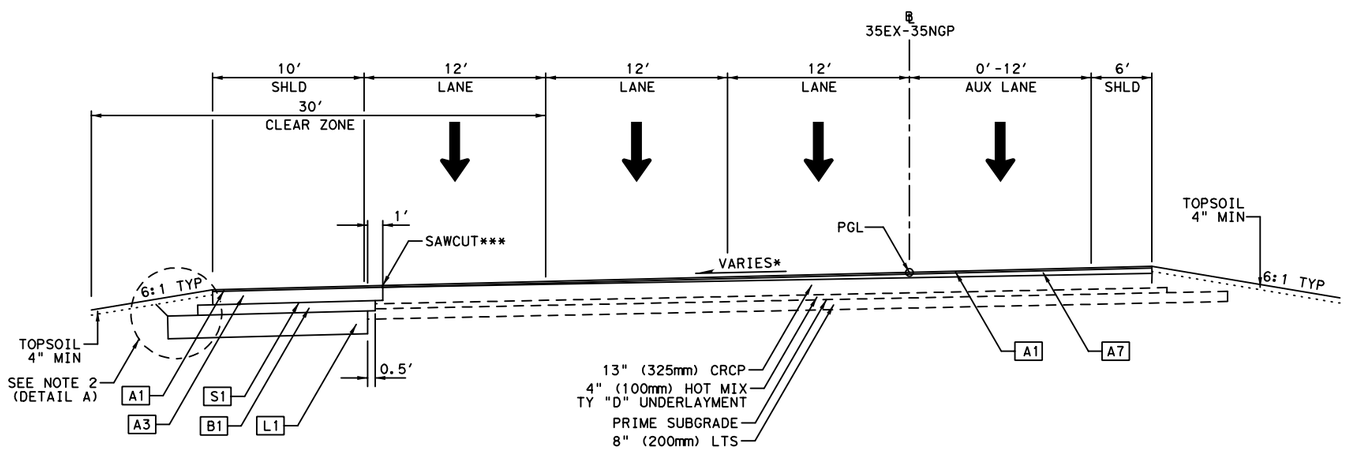

* CROSS SLOPE TRANSITIONS:
FROM 2.5% TO 4.8% FROM STA 4595+69.29 TO STA 4597+55.29
FROM 4.8% TO 1.04% FROM STA 4605+20.48 TO STA 4609+04.34

**REFER TO PLAN & PROFILE SHEETS OVERLAY LIMITS

***REFER TO PLAN & PROFILE SHEETS FOR SAWCUT LIMITS

PROPOSED IH 35W NGP TYPICAL SECTION

℄ 35EX-35NGP STA 4595+00.00 TO STA 4609+04.34

NOTES:

1. STATION LIMITS SHOWN ARE APPROXIMATE AND FOR NORMAL ROADWAY CONDITIONS. FOR WIDENINGS AND TRANSITIONS, SEE VARIOUS PLAN AND PROFILE SHEETS.
2. SEE TYPICAL SECTIONS MISCELLANEOUS DETAILS SHEET FOR PAVEMENT EDGE AND LIME TREATMENT EXTENSION DETAILS.
3. NORMAL CROSS SLOPES ARE TYPICALLY DISPLAYED. REFER TO ROADWAY PLAN & PROFILE SHEETS AND SUPERELEVATION DATA SHEET FOR ADDITIONAL INFORMATION.
4. SEE SHEET 55C FOR APPLICABLE STATION RANGES AND DEPTHS OF NON-SWELLING SELECT FILL MATERIAL (TY C1 EMBANKMENT).
5. REFER TO ROADWAY PLAN & PROFILE SHEETS FOR MBGF & BARRIER LOCATIONS.

STATE OF TEXAS
SYED S. HAQ
94660
LICENSED
PROFESSIONAL ENGINEER

08/22/2012

KENNEDY CONSULTING
TBPE REGISTRATION NO. F-926

Texas Department of Transportation
© 2012

IH 35W FROM NORTH TARRANT PKWY TO IH 820

TYPICAL SECTIONS

IH 35W MAINLANES

(GENERAL PURPOSE LANES)

SCALE 1" = 10′ SHEET 4 OF 8

DESIGN	FED.RD. DIV.NO.	FEDERAL AID PROJECT NO.		HIGHWAY NO.
KCI	6	(SEE TITLE SHEET)		IH 35W
GRAPHICS KCI	STATE	DISTRICT	COUNTY	SHEET NO.
CHECK KCI	TEXAS	FTW	TARRANT	35
CHECK	CONTROL	SECTION	JOB	
KCI	0014	16	255, ETC.	

FILENAME: S3BTYP16A.dgn

DRAWING DATE: 8/22/2012

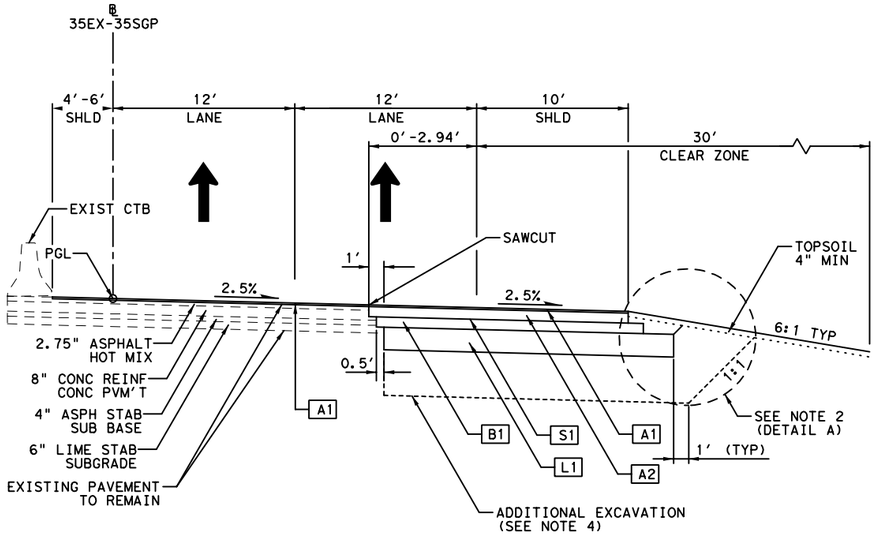

PROPOSED IH 35W SGP INTERIM TRANSITION TYPICAL SECTION

℄ 35EX-35SGP STA 3401+00.00 TO STA 3403+45.69

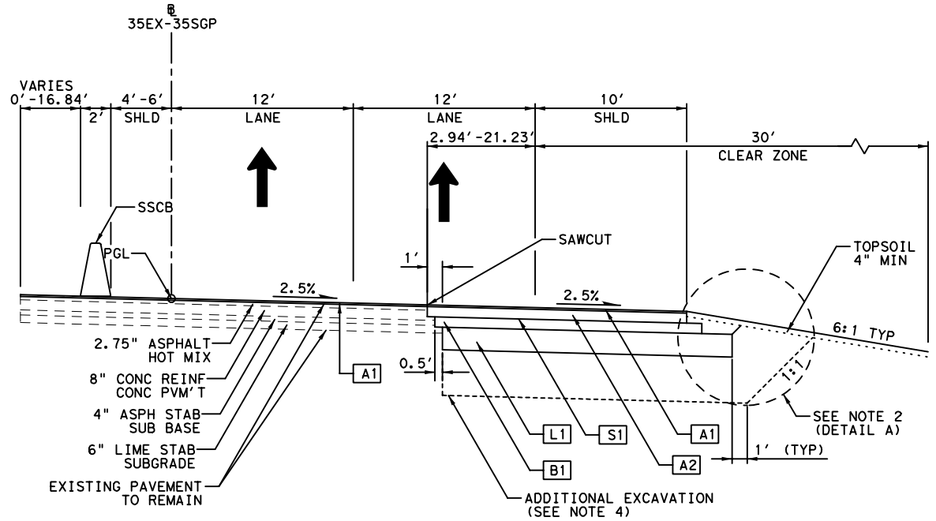

PROPOSED IH 35W SGP INTERIM TRANSITION TYPICAL SECTION

℄ 35EX-35SGP STA 3403+45.69 TO STA 3408+00.00

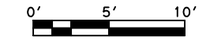

LEGEND:

- A1 1.25" STONE MTRX-ASPH SMA-F SAC-B PG76-22
- A2 9" D-GR HMA(QCQA) TY-B PG64-22
- A3 10.5" D-GR HMA(QCQA) TY-B PG64-22
- A4 5" D-GR HMA(QCQA) TY-B PG64-22
- A5 6" D-GR HMA(QCQA) TY-B PG64-22
- A6 8" D-GR HMA(QCQA) TY-B PG64-22
- A7 D-GR HMA (QCQA) TY-D PG64-22 (LEVEL-UP)
- S1 PRIME COAT(EC-30)
- B1 FL BS (CMP IN PLC)(TY D GR 4)(FNAL POS)(8")
- B2 FL BS (CMP IN PLC)(TY D GR 4)(FNAL POS)(4")
- L1 LIME TRT (EXIST MATL)(18"-36") (SEE SHEET 55C FOR STATION RANGES & DEPTHS)

NOTES:

1. STATION LIMITS SHOWN ARE APPROXIMATE AND FOR NORMAL ROADWAY CONDITIONS. FOR WIDENINGS AND TRANSITIONS, SEE VARIOUS PLAN AND PROFILE SHEETS.
2. SEE TYPICAL SECTIONS MISCELLANEOUS DETAILS SHEET FOR PAVEMENT EDGE AND LIME TREATMENT EXTENSION DETAILS.
3. NORMAL CROSS SLOPES ARE TYPICALLY DISPLAYED. REFER TO ROADWAY PLAN & PROFILE SHEETS AND SUPERELEVATION DATA SHEET FOR ADDITIONAL INFORMATION.
4. SEE SHEET 55C FOR APPLICABLE STATION RANGES AND DEPTHS OF NON-SWELLING SELECT FILL MATERIAL (TY C1 EMBANKMENT).
5. REFER TO ROADWAY PLAN & PROFILE SHEETS FOR MBGF & BARRIER LOCATIONS.

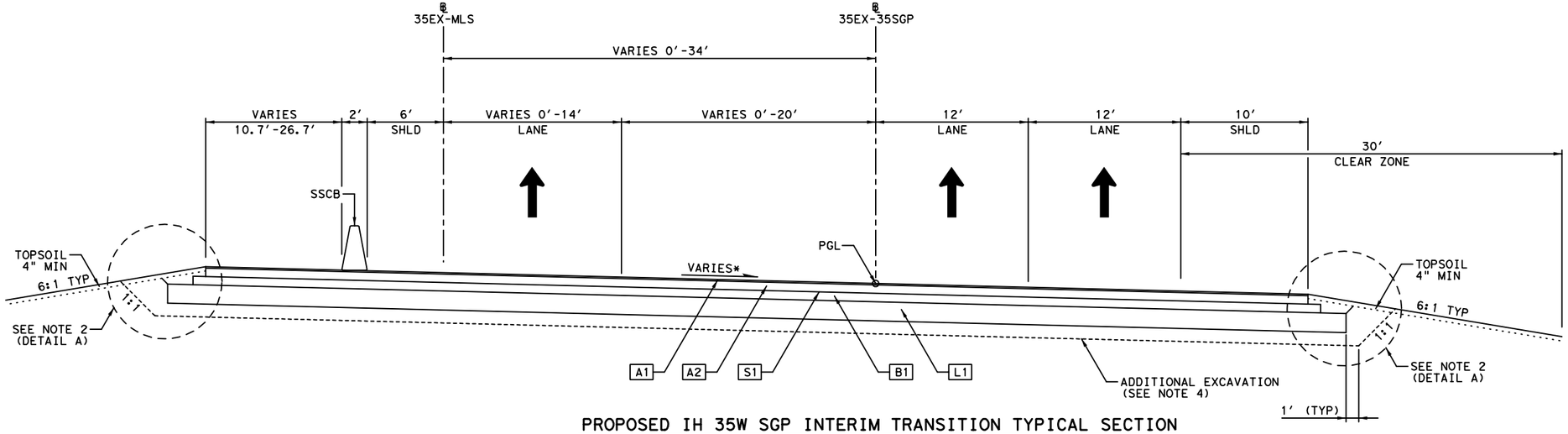

PROPOSED IH 35W SGP INTERIM TRANSITION TYPICAL SECTION

℄ 35EX-35SGP STA 3408+00.00 TO STA 3414+37.21

STATE OF TEXAS
SYED S. HAQ
94660
LICENSED
PROFESSIONAL ENGINEER
08/22/2012

KENNEDY CONSULTING
TBPE REGISTRATION NO. F-926

Texas Department of Transportation
© 2012

IH 35W FROM NORTH TARRANT PKWY TO IH 820

TYPICAL SECTIONS

IH 35W MAINLANES

(GENERAL PURPOSE LANES)

SCALE 1" = 10' SHEET 5 OF 8

DESIGN	FED.RD. DIV.NO.	FEDERAL AID PROJECT NO.		HIGHWAY NO.
KCI	6	(SEE TITLE SHEET)		IH 35W
GRAPHICS KCI	STATE	DISTRICT	COUNTY	SHEET NO.
CHECK KCI	TEXAS	FTW	TARRANT	36
CHECK KCI	CONTROL 0014	SECTION 16	JOB 255, ETC.	

FILENAME: S3BTYP17.dgn

DRAWING DATE: 8/22/2012

0′ 5′ 10′

SCALE IN FEET

LEGEND:

- A1 1.25" STONE MTRX-ASPH SMA-F SAC-B PG76-22
- A2 9" D-GR HMA(QCQA) TY-B PG64-22
- A3 10.5" D-GR HMA(QCQA) TY-B PG64-22
- A4 5" D-GR HMA(QCQA) TY-B PG64-22
- A5 6" D-GR HMA(QCQA) TY-B PG64-22
- A6 8" D-GR HMA(QCQA) TY-B PG64-22
- A7 D-GR HMA (QCQA) TY-D PG64-22 (LEVEL-UP)
- S1 PRIME COAT(EC-30)
- B1 FL BS (CMP IN PLC)(TY D GR 4)(FNAL POS)(8")
- B2 FL BS (CMP IN PLC)(TY D GR 4)(FNAL POS)(4")
- L1 LIME TRT (EXIST MATL)(18"-36") (SEE SHEET 55C FOR STATION RANGES & DEPTHS)

NOTES:

1. STATION LIMITS SHOWN ARE APPROXIMATE AND FOR NORMAL ROADWAY CONDITIONS. FOR WIDENINGS AND TRANSITIONS, SEE VARIOUS PLAN AND PROFILE SHEETS.
2. SEE TYPICAL SECTIONS MISCELLANEOUS DETAILS SHEET FOR PAVEMENT EDGE AND LIME TREATMENT EXTENSION DETAILS.
3. NORMAL CROSS SLOPES ARE TYPICALLY DISPLAYED. REFER TO ROADWAY PLAN & PROFILE SHEETS AND SUPERELEVATION DATA SHEET FOR ADDITIONAL INFORMATION.
4. SEE SHEET 55C FOR APPLICABLE STATION RANGES AND DEPTHS OF NON-SWELLING SELECT FILL MATERIAL (TY C1 EMBANKMENT).
5. REFER TO ROADWAY PLAN & PROFILE SHEETS FOR MBGF & BARRIER LOCATIONS.

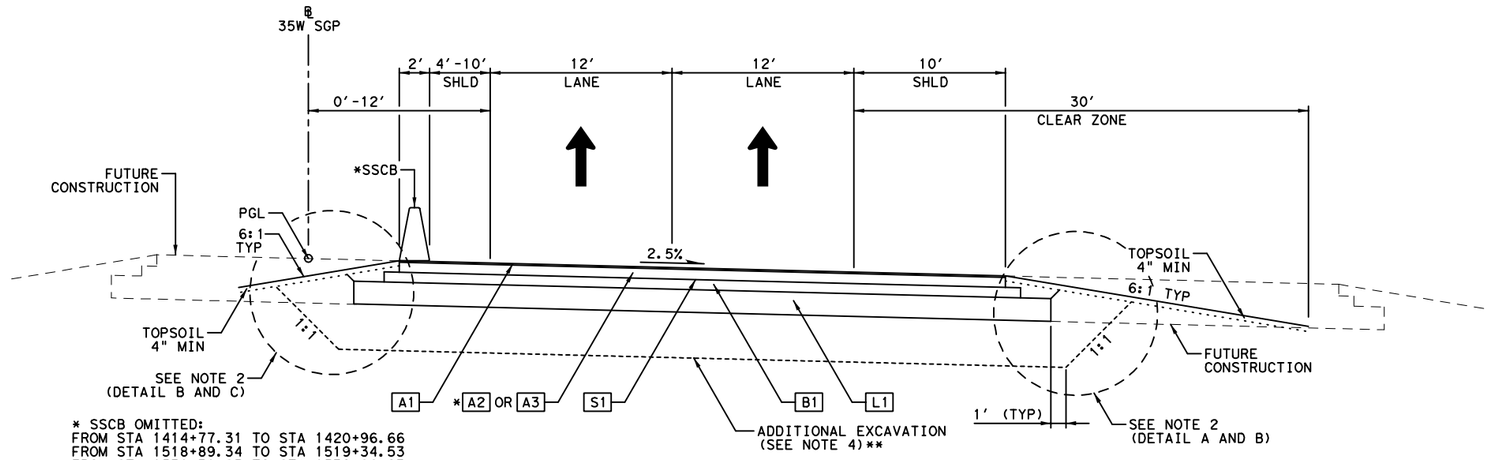

* SSCB OMITTED:
FROM STA 1414+77.31 TO STA 1420+96.66
FROM STA 1518+89.34 TO STA 1519+34.53
FROM STA 1531+31.25 TO STA 1539+86.93

** ℄ 35W SGP STA 1414+77 TO STA 1420+97
℄ 35W SGP STA 1425+65 TO STA 1426+41
℄ 35W SGP STA 1532+52 TO STA 1536+63
℄ 35W SGP STA 1542+73 TO STA 1547+79

PROPOSED IH 35W SGP TYPICAL SECTION

℄ 35W SGP STA 1414+77.31 TO STA 1420+96.66
℄ 35W SGP STA 1425+65.47 TO STA 1455+67.17
℄ 35W SGP STA 1517+82.35 TO STA 1524+29.25
℄ 35W SGP STA 1531+31.25 TO STA 1536+62.96
℄ 35W SGP STA 1542+73.33 TO STA 1547+78.90

*A2 ℄ 35W ML STA 1414+77.31 TO STA 1451+00.00
A3 ℄ 35W ML STA 1451+00.00 TO STA 1546+27.07

REFER TO PLAN & PROFILE SHEETS FOR LIMITS OF BRIDGE

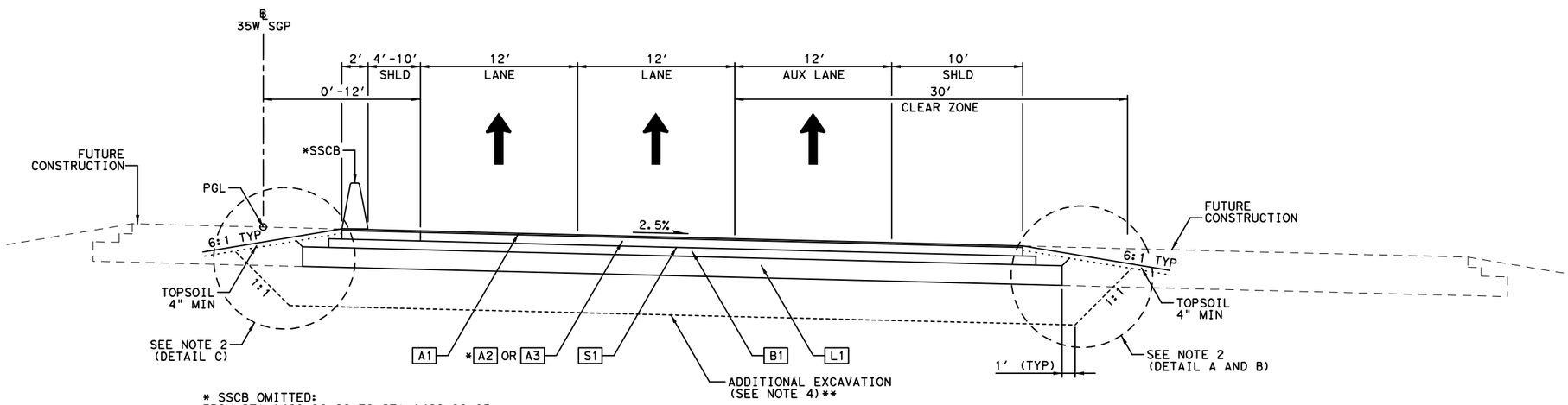

* SSCB OMITTED:
FROM STA 1420+96.66 TO STA 1422+90.85
FROM STA 1480+87.42 TO STA 1518+89.34

** ℄ 35W SGP STA 1420+97 TO STA 1425+65
℄ 35W SGP STA 1474+43 TO STA 1476+43

PROPOSED IH 35W SGP TYPICAL SECTION

℄ 35W SGP STA 1420+96.66 TO STA 1425+65.47
℄ 35W SGP STA 1471+68.72 TO STA 1517+82.35
℄ 35W SGP STA 1547+78.90 TO STA 1566+80.73

*A2 ℄ 35W ML STA 1419+44.83 TO STA 1426+72.76
A3 ℄ 35W ML STA 1426+72.76 TO STA 1518+89.34

STATE OF TEXAS
SYED S. HAQ
94660
LICENSED
PROFESSIONAL ENGINEER
08/22/2012

KENNEDY CONSULTING
TBPE REGISTRATION NO. F-926

Texas Department of Transportation
© 2012

IH 35W FROM NORTH TARRANT PKWY TO IH 820

TYPICAL SECTIONS
IH 35W MAINLANES
(GENERAL PURPOSE LANES)

SCALE 1" = 10′ SHEET 6 OF 8

DESIGN	FED.RD. DIV.NO.	FEDERAL AID PROJECT NO.		HIGHWAY NO.
KCI	6	(SEE TITLE SHEET)		IH 35W
GRAPHICS KCI	STATE	DISTRICT	COUNTY	SHEET NO.
CHECK KCI	TEXAS	FTW	TARRANT	37
CHECK KCI	CONTROL	SECTION	JOB	
	0014	16	255, ETC.	

FILENAME: S3BTYP18.dgn
DRAWING DATE: 8/22/2012

0′ 5′ 10′

SCALE IN FEET

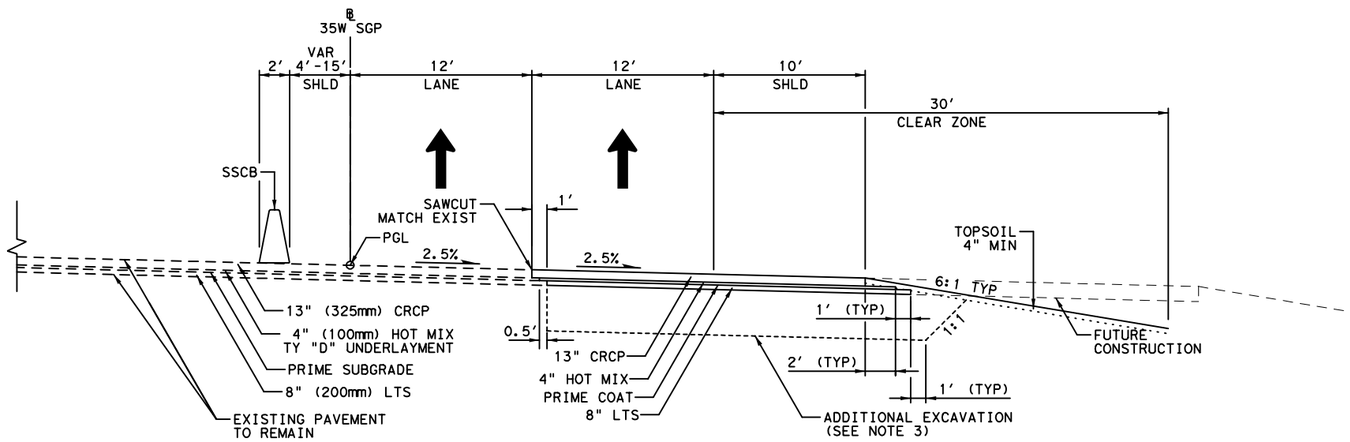

PROPOSED IH 35W SGP TYPICAL SECTION

℄ 35W SGP STA 1536+62.96 TO STA 1542+73.33

NOTES:

1. STATION LIMITS SHOWN ARE APPROXIMATE AND FOR NORMAL ROADWAY CONDITIONS. FOR WIDENINGS AND TRANSITIONS, SEE VARIOUS PLAN AND PROFILE SHEETS.
2. NORMAL CROSS SLOPES ARE TYPICALLY DISPLAYED. REFER TO ROADWAY PLAN & PROFILE SHEETS AND SUPERELEVATION DATA SHEET FOR ADDITIONAL INFORMATION.
3. SEE SHEET 55C FOR APPLICABLE STATION RANGES AND DEPTHS OF NON-SWELLING SELECT FILL MATERIAL (TY C1 EMBANKMENT)

STATE OF TEXAS
SYED S. HAQ
94660
LICENSED
PROFESSIONAL ENGINEER

Syed S. Haq
08/22/2012

KENNEDY CONSULTING
TBPE REGISTRATION NO. F-926

Texas Department of Transportation
© 2012

IH 35W FROM NORTH TARRANT PKWY TO IH 820

TYPICAL SECTIONS

IH 35W MAINLANES

(GENERAL PURPOSE LANES)

SCALE 1" = 10′ SHEET 7 OF 8

DESIGN	FED. RD. DIV. NO.	FEDERAL AID PROJECT NO.		HIGHWAY NO.
KCI	6	(SEE TITLE SHEET)		IH 35W
GRAPHICS	STATE	DISTRICT	COUNTY	SHEET NO.
KCI	TEXAS	FTW	TARRANT	38
CHECK	CONTROL	SECTION	JOB	
KCI	0014	16	255, ETC.	
CHECK				
KCI				

FILENAME: S3BTYP18A.dgn

DRAWING DATE: 8/22/2012

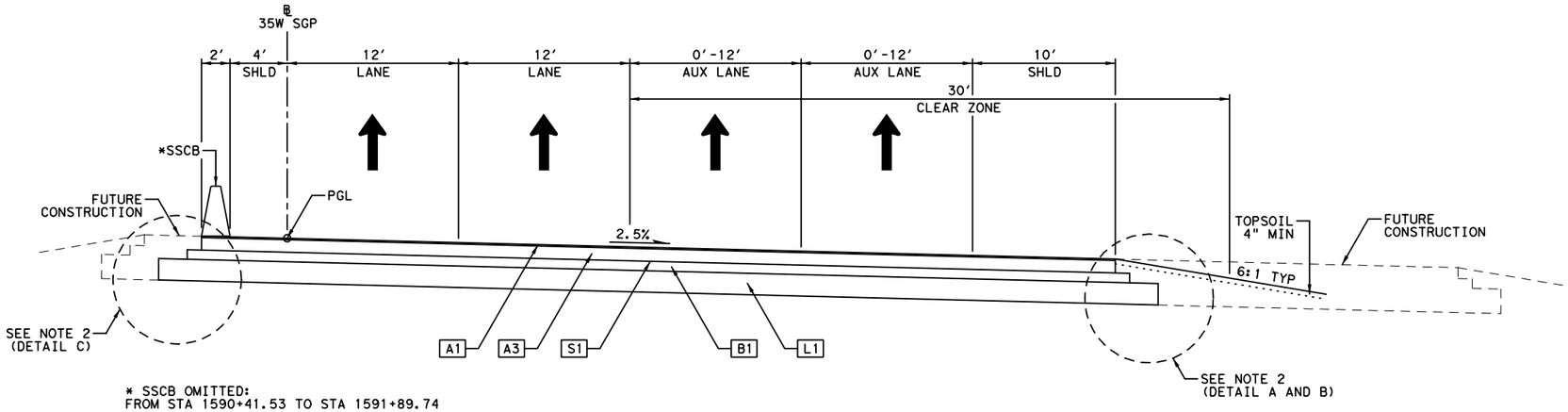

* SSCB OMITTED:
FROM STA 1590+41.53 TO STA 1591+89.74

PROPOSED IH 35W SGP TYPICAL SECTION

℄ 35W SGP STA 1455+67.17 TO STA 1471+68.72
℄ 35W SGP STA 1566+80.73 TO STA 1591+89.74

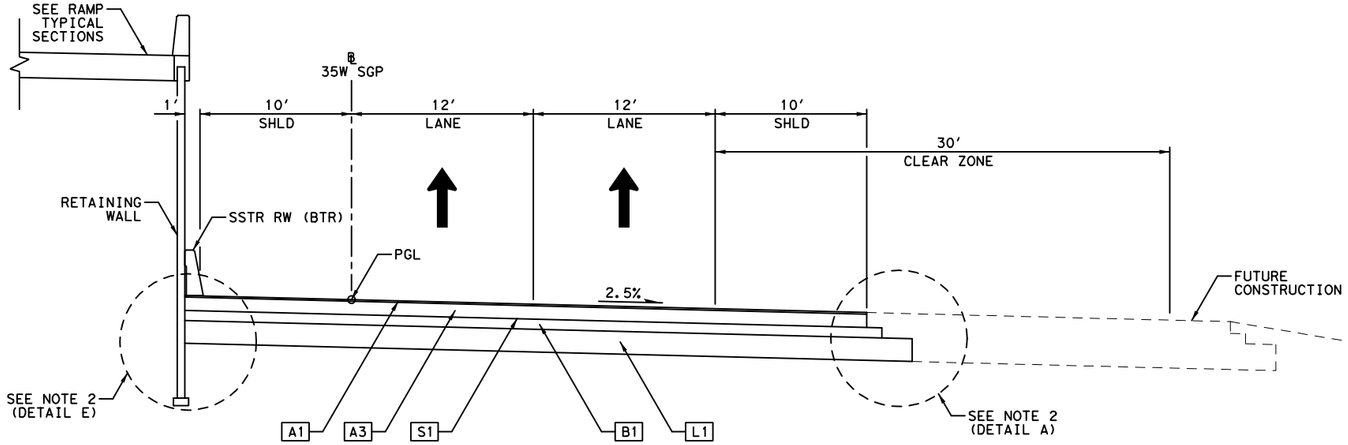

PROPOSED IH 35W SGP TYPICAL SECTION

℄ 35W SGP STA 1524+29.25 TO STA 1531+31.25

0' 5' 10'
SCALE IN FEET

LEGEND:

- A1 1.25" STONE MTRX-ASPH SMA-F SAC-B PG76-22
- A2 9" D-GR HMA(QCQA) TY-B PG64-22
- A3 10.5" D-GR HMA(QCQA) TY-B PG64-22
- A4 5" D-GR HMA(QCQA) TY-B PG64-22
- A5 6" D-GR HMA(QCQA) TY-B PG64-22
- A6 8" D-GR HMA(QCQA) TY-B PG64-22
- A7 D-GR HMA (QCQA) TY-D PG64-22 (LEVEL-UP)
- S1 PRIME COAT(EC-30)
- B1 FL BS (CMP IN PLC)(TY D GR 4)(FNAL POS)(8")
- B2 FL BS (CMP IN PLC)(TY D GR 4)(FNAL POS)(4")
- L1 LIME TRT (EXIST MATL)(18"-36") (SEE SHEET 55C FOR STATION RANGES & DEPTHS)

NOTES:

1. STATION LIMITS SHOWN ARE APPROXIMATE AND FOR NORMAL ROADWAY CONDITIONS. FOR WIDENINGS AND TRANSITIONS, SEE VARIOUS PLAN AND PROFILE SHEETS.
2. SEE TYPICAL SECTIONS MISCELLANEOUS DETAILS SHEET FOR PAVEMENT EDGE AND LIME TREATMENT EXTENSION DETAILS.
3. NORMAL CROSS SLOPES ARE TYPICALLY DISPLAYED. REFER TO ROADWAY PLAN & PROFILE SHEETS AND SUPERELEVATION DATA SHEET FOR ADDITIONAL INFORMATION.
4. SEE SHEET 55C FOR APPLICABLE STATION RANGES AND DEPTHS OF NON-SWELLING SELECT FILL MATERIAL (TY C1 EMBANKMENT).
5. REFER TO ROADWAY PLAN & PROFILE SHEETS FOR MBGF & BARRIER LOCATIONS.
6. REFER TO PAVEMENT MARKING AND DELINEATION PLANS FOR STRIPING CONFIGURATION FROM ℄ 35W SGP STA 1575+29.06 TO 1591+89.74.

STATE OF TEXAS
SYED S. HAQ
94660
LICENSED
PROFESSIONAL ENGINEER
08/22/2012

KENNEDY CONSULTING
TBPE REGISTRATION NO. F-926

Texas Department of Transportation
© 2012

IH 35W FROM NORTH TARRANT PKWY TO IH 820

TYPICAL SECTIONS
IH 35W MAINLANES
(GENERAL PURPOSE LANES)

SCALE 1" = 10' SHEET 8 OF 8

DESIGN	FED.RD. DIV.NO.	FEDERAL AID PROJECT NO.		HIGHWAY NO.
KCI	6	(SEE TITLE SHEET)		IH 35W
GRAPHICS KCI	STATE	DISTRICT	COUNTY	SHEET NO.
CHECK KCI	TEXAS	FTW	TARRANT	39
CHECK KCI	CONTROL 0014	SECTION 16	JOB 255, ETC.	

FILENAME: S3BTYP19.dgn
DRAWING DATE: 8/22/2012

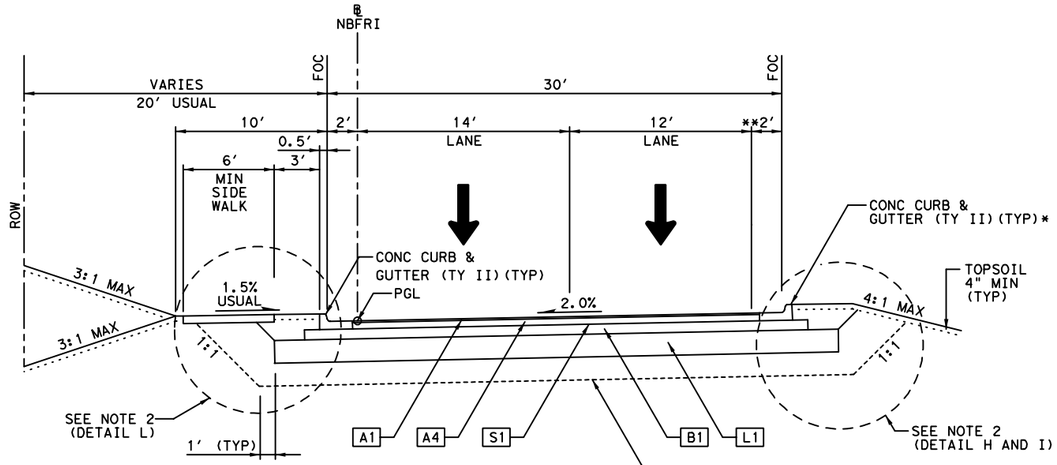

* RETAINING WALL/SSTR:
FROM STA 1554+68.08 TO STA 1556+02.90
FROM STA 1572+37.02 TO STA 1579+80.00

**INSIDE SHOULDER VARIES FROM 2' TO 14'
FROM STA 1557+04.80 TO STA 1591+16.40

PROPOSED NB FRONTAGE ROAD TYPICAL SECTION

℄ NBFRI STA 1472+00.00 TO STA 1476+54.36
℄ NBFRI STA 1554+68.12 TO STA 1591+16.40

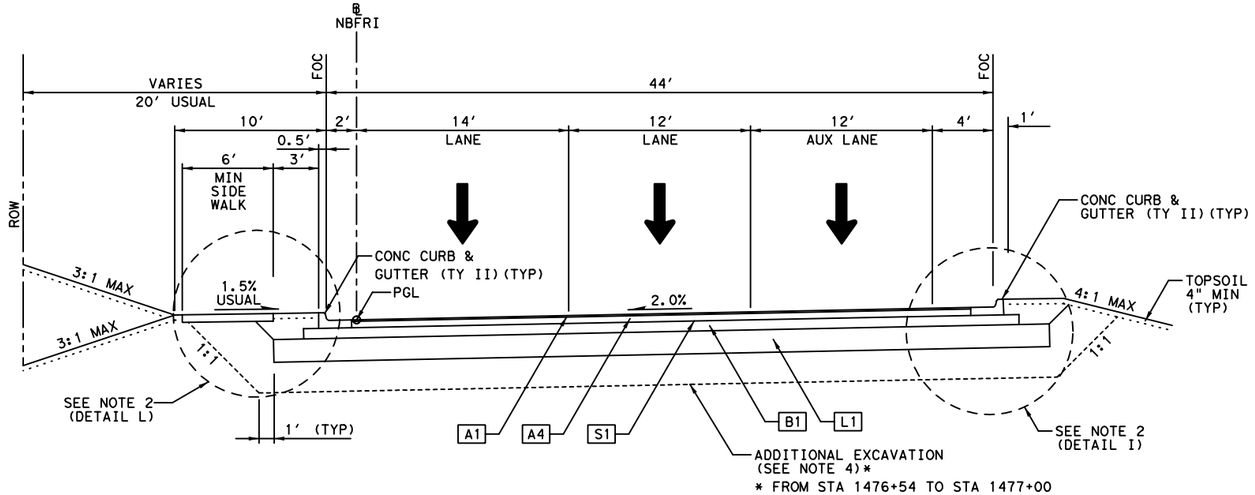

PROPOSED NB FRONTAGE ROAD TYPICAL SECTION

℄ NBFRI STA 1476+54.36 TO STA 1491+40.01
℄ NBFRI STA 1531+89.14 TO STA 1539+58.73
℄ NBFRI STA 1548+25.26 TO STA 1554+68.12

REFER TO PLAN & PROFILE SHEETS FOR LIMITS OF BRIDGE

0' 5' 10'
SCALE IN FEET

LEGEND:

- A1 1.25" STONE MTRX-ASPH SMA-F SAC-B PG76-22
- A2 9" D-GR HMA(QCQA) TY-B PG64-22
- A3 10.5" D-GR HMA(QCQA) TY-B PG64-22
- A4 5" D-GR HMA(QCQA) TY-B PG64-22
- A5 6" D-GR HMA(QCQA) TY-B PG64-22
- A6 8" D-GR HMA(QCQA) TY-B PG64-22
- A7 D-GR HMA (QCQA) TY-D PG64-22 (LEVEL-UP)
- S1 PRIME COAT(EC-30)
- B1 FL BS (CMP IN PLC)(TY D GR 4)(FNAL POS)(8")
- B2 FL BS (CMP IN PLC)(TY D GR 4)(FNAL POS)(4")
- L1 LIME TRT (EXIST MATL)(18"-36") (SEE SHEET 55C FOR STATION RANGES & DEPTHS)

NOTES:

1. STATION LIMITS SHOWN ARE APPROXIMATE AND FOR NORMAL ROADWAY CONDITIONS. FOR WIDENINGS AND TRANSITIONS, SEE VARIOUS PLAN AND PROFILE SHEETS.
2. SEE TYPICAL SECTIONS MISCELLANEOUS DETAILS SHEET FOR PAVEMENT EDGE AND LIME TREATMENT EXTENSION DETAILS.
3. NORMAL CROSS SLOPES ARE TYPICALLY DISPLAYED. REFER TO ROADWAY PLAN & PROFILE SHEETS AND SUPERELEVATION DATA SHEET FOR ADDITIONAL INFORMATION.
4. SEE SHEET 55C FOR APPLICABLE STATION RANGES AND DEPTHS OF NON-SWELLING SELECT FILL MATERIAL (TY C1 EMBANKMENT).
5. REFER TO ROADWAY PLAN & PROFILE SHEETS FOR MBGF & BARRIER LOCATIONS.
6. REFER TO PAVEMENT MARKING AND DELINEATION PLANS FOR STRIPING CONFIGURATION FROM ℄ NBFRI STA 1572+00.00 TO 1490+02.25.

STATE OF TEXAS
SYED S. HAQ
94660
LICENSED
PROFESSIONAL ENGINEER
Syed S. Haq
08/22/2012

KENNEDY CONSULTING
TBPE REGISTRATION NO. F-926

Texas Department of Transportation
© 2012

IH 35W FROM NORTH TARRANT PKWY TO IH 820

TYPICAL SECTIONS
IH 35W FRONTAGE ROAD

SCALE 1" = 10'
SHEET 1 OF 6

DESIGN	FED. RD. DIV. NO.	FEDERAL AID PROJECT NO.		HIGHWAY NO.
KCI	6	(SEE TITLE SHEET)		IH 35W
GRAPHICS	STATE	DISTRICT	COUNTY	SHEET NO.
KCI	TEXAS	FTW	TARRANT	40
CHECK	CONTROL	SECTION	JOB	
KCI	0014	16	255, ETC.	

DRAWING DATE: 8/22/2012 FILENAME: S3BTYP20.dgn

0′ 5′ 10′
SCALE IN FEET

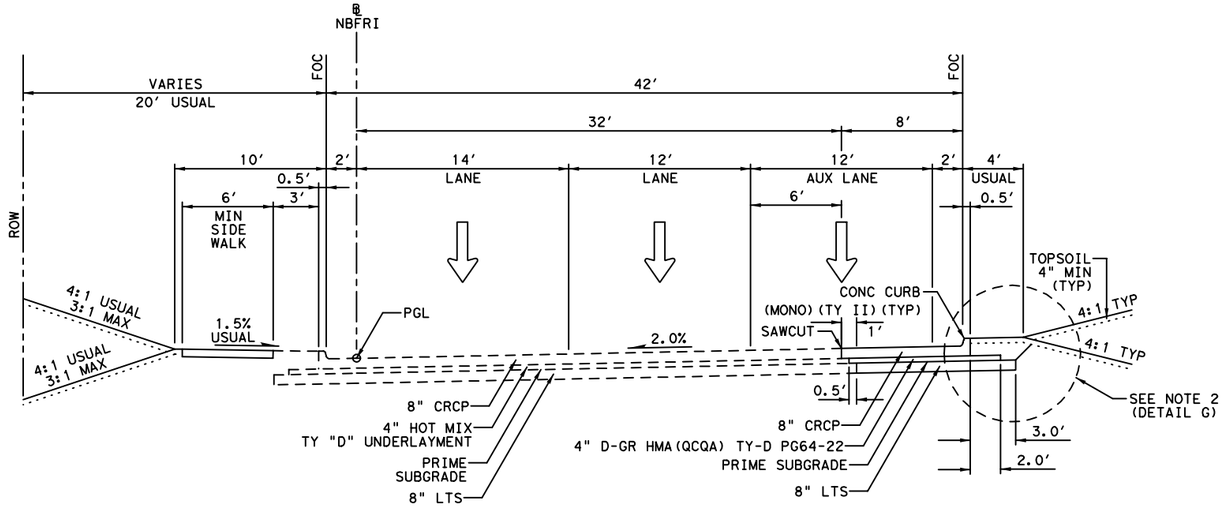

PROPOSED NB FRONTAGE ROAD TYPICAL SECTION

℄ NBFRI STA 1491+40.01 TO STA 1496+33.58

NOTES:

1. STATION LIMITS SHOWN ARE APPROXIMATE AND FOR NORMAL ROADWAY CONDITIONS. FOR WIDENINGS AND TRANSITIONS, SEE VARIOUS PLAN AND PROFILE SHEETS.
2. SEE TYPICAL SECTIONS MISCELLANEOUS DETAILS SHEET FOR PAVEMENT EDGE AND LIME TREATMENT EXTENSION DETAILS.

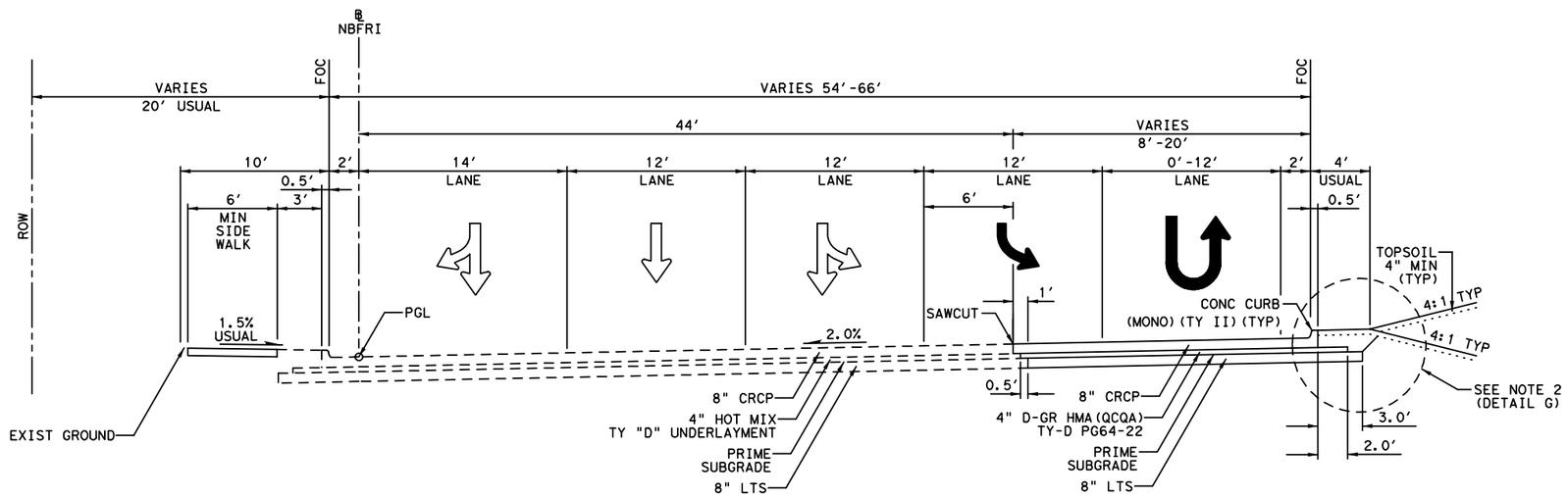

PROPOSED NB FRONTAGE ROAD TYPICAL SECTION

℄ NBFRI STA 1499+20.11 TO STA 1504+38.97*

*STATION EQUATION:
STA 1497+96.16 BK = STA 1497+85.11 AH

STATE OF TEXAS
SYED S. HAQ
94660
LICENSED
PROFESSIONAL ENGINEER
Syed S. Haq
08/22/2012

KENNEDY CONSULTING
TBPE REGISTRATION NO. F-926

Texas Department of Transportation
© 2012

IH 35W FROM NORTH TARRANT PKWY TO IH 820

TYPICAL SECTIONS
IH 35W FRONTAGE ROAD

SCALE 1" = 10′ SHEET 2 OF 6

DESIGN	FED.RD. DIV.NO.	FEDERAL AID PROJECT NO.		HIGHWAY NO.
KCI	6	(SEE TITLE SHEET)		IH 35W
GRAPHICS KCI	STATE	DISTRICT	COUNTY	SHEET NO.
CHECK KCI	TEXAS	FTW	TARRANT	41
CHECK KCI	CONTROL 0014	SECTION 16	JOB 255, ETC.	

FILENAME: S3BTYP21.dgn
DRAWING DATE: 8/22/2012

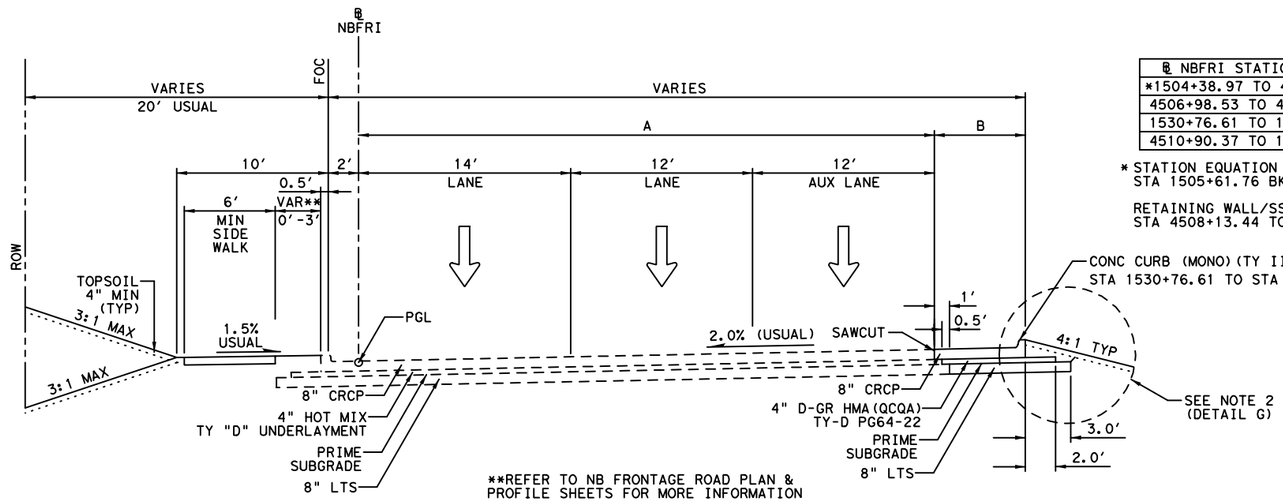

PROPOSED NB FRONTAGE ROAD TYPICAL SECTION

℄ NBFRI STA 1504+38.97 TO STA 4510+90.37*
℄ NBFRI STA 1530+76.78 TO 1531+89.14

℄ NBFRI STATION RANGE	A	B
*1504+38.97 TO 4506+98.59	48'	6' (NO CURB)
4506+98.53 TO 4510+90.37	38'	VARIES 16'-38'
1530+76.61 TO 1531+89.14	VARIES 35.2'-32'	8.5'
4510+90.37 TO 1530+76.78	38'-43.7'	8.5'

* STATION EQUATION :
STA 1505+61.76 BK = STA 4505+61.76 AH

RETAINING WALL/SSTR:
STA 4508+13.44 TO STA 4510+90.37

0' 5' 10'
SCALE IN FEET

LEGEND:

- A1 1.25" STONE MTRX-ASPH SMA-F SAC-B PG76-22
- A2 9" D-GR HMA(QCQA) TY-B PG64-22
- A3 10.5" D-GR HMA(QCQA) TY-B PG64-22
- A4 5" D-GR HMA(QCQA) TY-B PG64-22
- A5 6" D-GR HMA(QCQA) TY-B PG64-22
- A6 8" D-GR HMA(QCQA) TY-B PG64-22
- A7 D-GR HMA (QCQA) TY-D PG64-22 (LEVEL-UP)
- S1 PRIME COAT(EC-30)
- B1 FL BS (CMP IN PLC)(TY D GR 4)(FNAL POS)(8")
- B2 FL BS (CMP IN PLC)(TY D GR 4)(FNAL POS)(4")
- L1 LIME TRT (EXIST MATL)(18"-36") (SEE SHEET 55C FOR STATION RANGES & DEPTHS)

NOTES:

1. STATION LIMITS SHOWN ARE APPROXIMATE AND FOR NORMAL ROADWAY CONDITIONS. FOR WIDENINGS AND TRANSITIONS, SEE VARIOUS PLAN AND PROFILE SHEETS.
2. SEE TYPICAL SECTIONS MISCELLANEOUS DETAILS SHEET FOR PAVEMENT EDGE AND LIME TREATMENT EXTENSION DETAILS.
3. NORMAL CROSS SLOPES ARE TYPICALLY DISPLAYED. REFER TO ROADWAY PLAN & PROFILE SHEETS AND SUPERELEVATION DATA SHEET FOR ADDITIONAL INFORMATION.
4. SEE SHEET 55C FOR APPLICABLE STATION RANGES AND DEPTHS OF NON-SWELLING SELECT FILL MATERIAL (TY C1 EMBANKMENT).
5. REFER TO ROADWAY PLAN & PROFILE SHEETS FOR MBGF & BARRIER LOCATIONS.

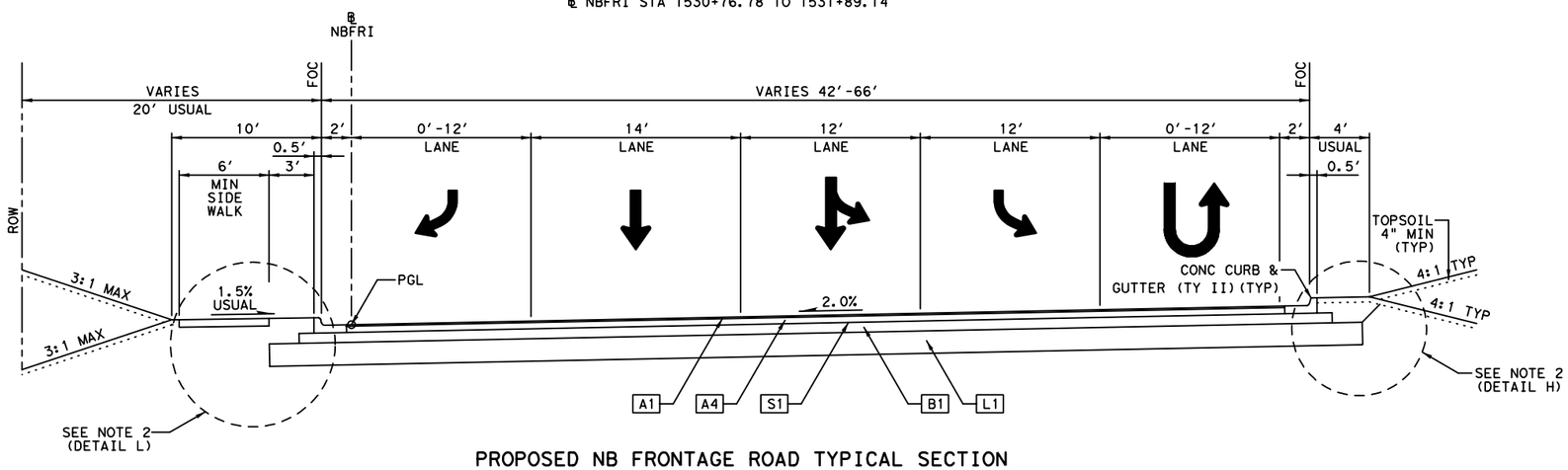

PROPOSED NB FRONTAGE ROAD TYPICAL SECTION

℄ NBFRI STA 1542+81.35 TO STA 1548+25.26

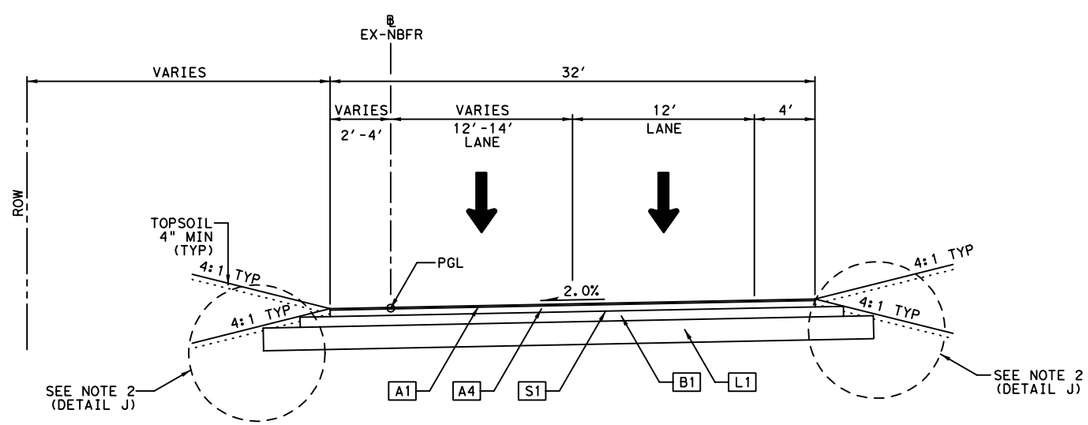

PROPOSED NB FRONTAGE ROAD INTERIM TRANSITION TYPICAL SECTION

℄ EX-NBFR STA 3591+16.40 TO 3597+45.94

STATE OF TEXAS
SYED S. HAQ
94660
LICENSED
PROFESSIONAL ENGINEER

08/22/2012

KENNEDY CONSULTING
TBPE REGISTRATION NO. F-926

Texas Department of Transportation
© 2012

IH 35W FROM NORTH TARRANT PKWY TO IH 820

TYPICAL SECTIONS
IH 35W FRONTAGE ROAD

SCALE 1" = 10' SHEET 3 OF 6

DESIGN	FED.RD. DIV.NO.	FEDERAL AID PROJECT NO.		HIGHWAY NO.
KCI	6	(SEE TITLE SHEET)		IH 35W
GRAPHICS	STATE	DISTRICT	COUNTY	SHEET NO.
KCI	TEXAS	FTW	TARRANT	42
CHECK	CONTROL	SECTION	JOB	
KCI	0014	16	255, ETC.	

DRAWING DATE: 8/22/2012 FILENAME: S38TYP22.dgn

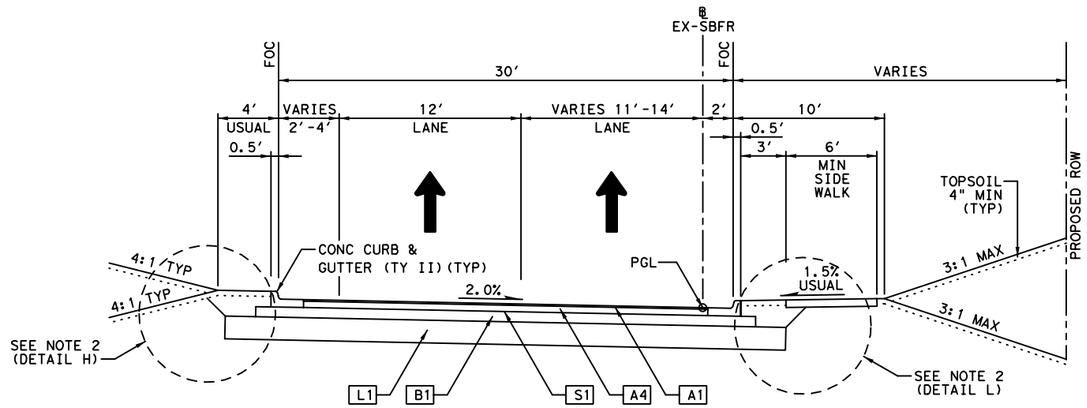

* SIDEWALK OMITTED:
FROM STA 330+59.38 TO STA 332+62.54

PROPOSED SB FRONTAGE ROAD INTERIM TRANSITION TYPICAL SECTION

℄ EX-SBFR STA 330+59.38 TO STA 333+12.54

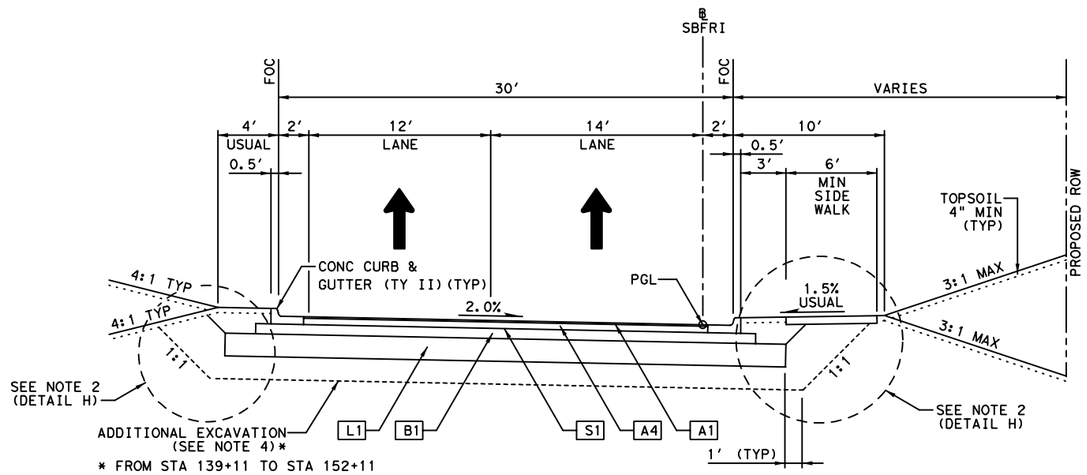

* FROM STA 139+11 TO STA 152+11

PROPOSED SB FRONTAGE ROAD TYPICAL SECTION

℄ SBFRI STA 33+12.54 TO STA 85+14.92
℄ SBFRI STA 139+11.10 TO STA 152+10.55

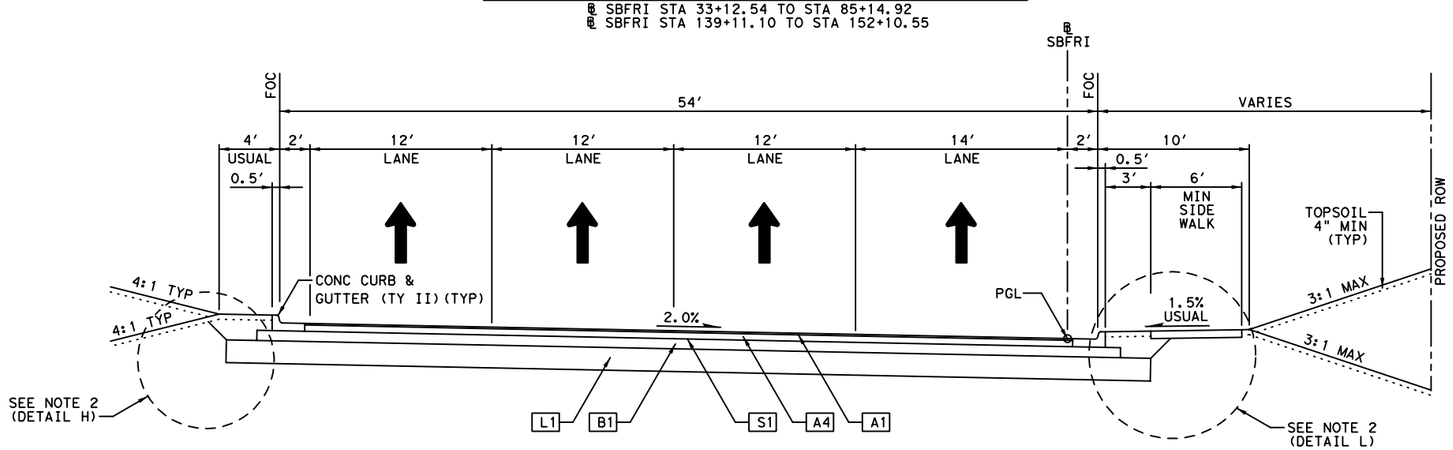

PROPOSED SB FRONTAGE ROAD TYPICAL SECTION

℄ SBFRI STA 85+14.92 TO STA 87+00.73

0′ 5′ 10′
SCALE IN FEET

LEGEND:

- A1 1.25" STONE MTRX-ASPH SMA-F SAC-B PG76-22
- A2 9" D-GR HMA(QCQA) TY-B PG64-22
- A3 10.5" D-GR HMA(QCQA) TY-B PG64-22
- A4 5" D-GR HMA(QCQA) TY-B PG64-22
- A5 6" D-GR HMA(QCQA) TY-B PG64-22
- A6 8" D-GR HMA(QCQA) TY-B PG64-22
- A7 D-GR HMA (QCQA) TY-D PG64-22 (LEVEL-UP)
- S1 PRIME COAT(EC-30)
- B1 FL BS (CMP IN PLC)(TY D GR 4)(FNAL POS)(8")
- B2 FL BS (CMP IN PLC)(TY D GR 4)(FNAL POS)(4")
- L1 LIME TRT (EXIST MATL)(18"-36") (SEE SHEET 55C FOR STATION RANGES & DEPTHS)

NOTES:

1. STATION LIMITS SHOWN ARE APPROXIMATE AND FOR NORMAL ROADWAY CONDITIONS. FOR WIDENINGS AND TRANSITIONS, SEE VARIOUS PLAN AND PROFILE SHEETS.
2. SEE TYPICAL SECTIONS MISCELLANEOUS DETAILS SHEET FOR PAVEMENT EDGE AND LIME TREATMENT EXTENSION DETAILS.
3. NORMAL CROSS SLOPES ARE TYPICALLY DISPLAYED. REFER TO ROADWAY PLAN & PROFILE SHEETS AND SUPERELEVATION DATA SHEET FOR ADDITIONAL INFORMATION.
4. SEE SHEET 55C FOR APPLICABLE STATION RANGES AND DEPTHS OF NON-SWELLING SELECT FILL MATERIAL (TY C1 EMBANKMENT).
5. REFER TO ROADWAY PLAN & PROFILE SHEETS FOR MBGF & BARRIER LOCATIONS.

KENNEDY CONSULTING
TBPE REGISTRATION NO. F-926

Texas Department of Transportation
© 2012

IH 35W FROM NORTH TARRANT PKWY TO IH 820

TYPICAL SECTIONS
IH 35W FRONTAGE ROAD

SCALE 1" = 10′ SHEET 4 OF 6

DESIGN	FED.RD. DIV.NO.	FEDERAL AID PROJECT NO.		HIGHWAY NO.
KCI	6	(SEE TITLE SHEET)		IH 35W
GRAPHICS	STATE	DISTRICT	COUNTY	SHEET NO.
KCI	TEXAS	FTW	TARRANT	43
CHECK	CONTROL	SECTION	JOB	
KCI	0014	16	255, ETC.	

FILENAME: S3BTYP23.dgn
DRAWING DATE: 8/22/2012

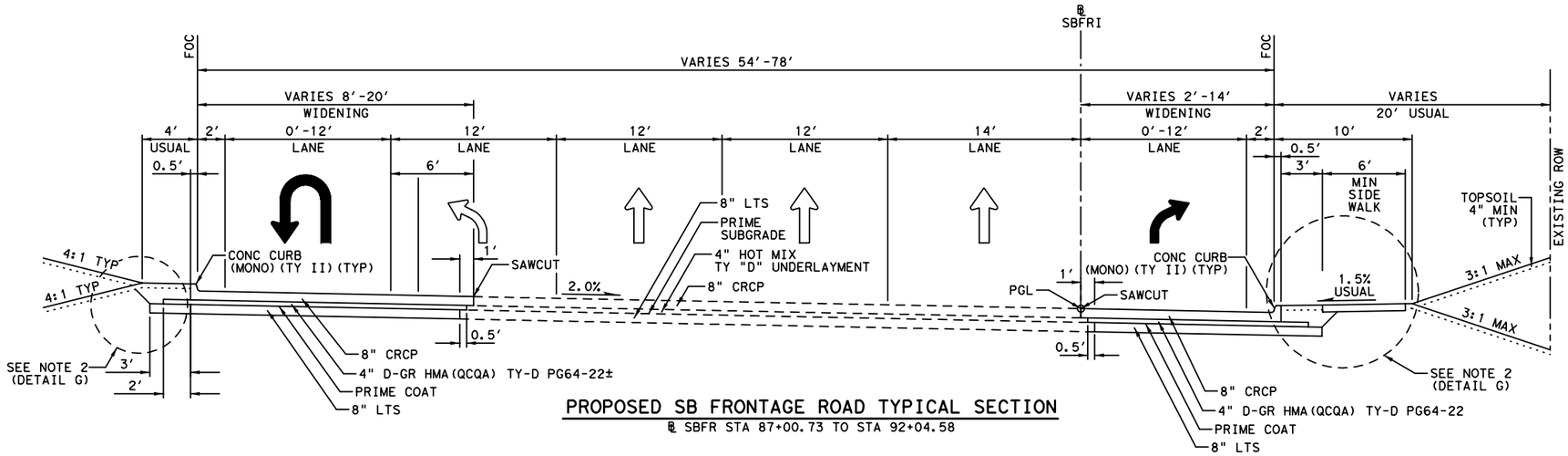

PROPOSED SB FRONTAGE ROAD TYPICAL SECTION

℄ SBFR STA 87+00.73 TO STA 92+04.58

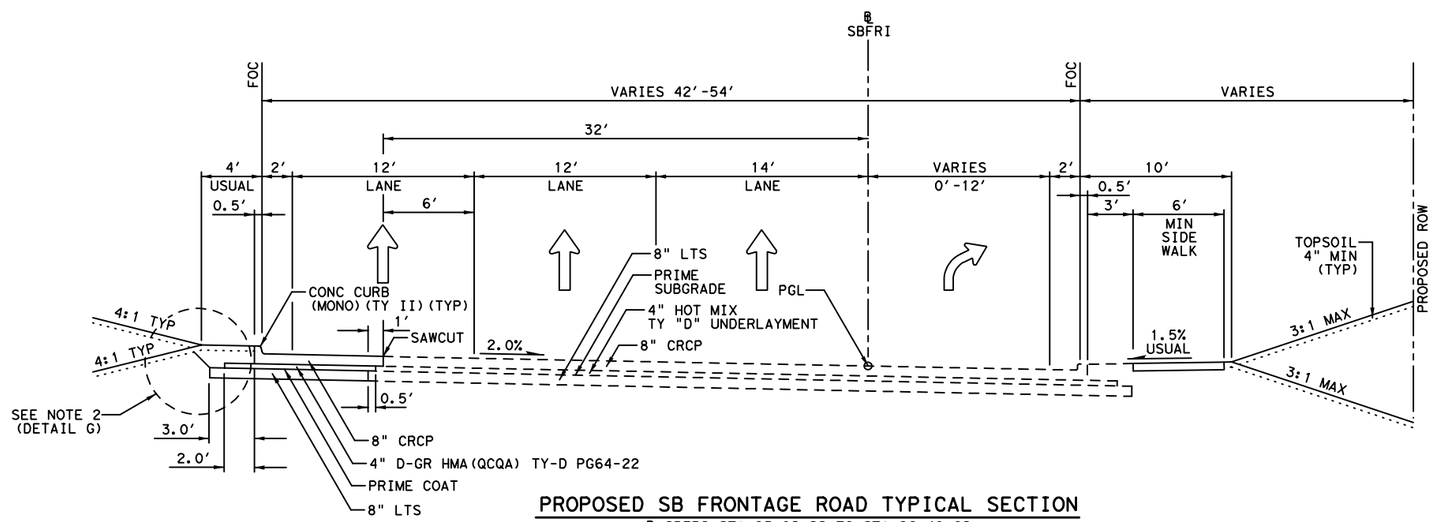

PROPOSED SB FRONTAGE ROAD TYPICAL SECTION

℄ SBFRI STA 95+02.22 TO STA 96+40.62

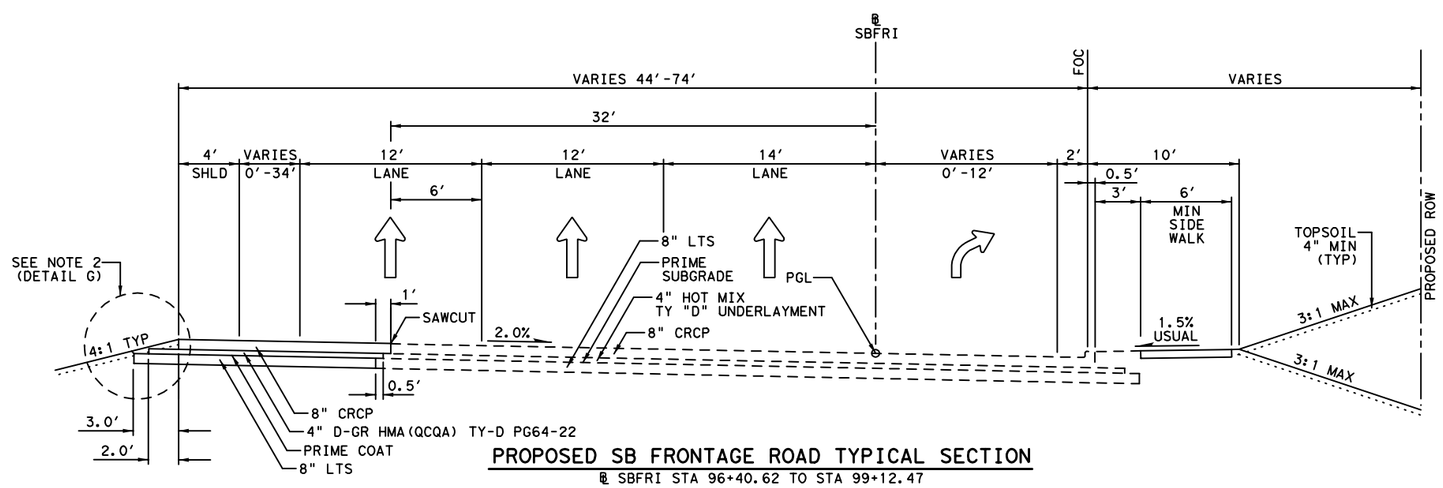

PROPOSED SB FRONTAGE ROAD TYPICAL SECTION

℄ SBFRI STA 96+40.62 TO STA 99+12.47

0' 5' 10'

SCALE IN FEET

LEGEND:

- A1 1.25" STONE MTRX-ASPH SMA-F SAC-B PG76-22
- A2 9" D-GR HMA (QCQA) TY-B PG64-22
- A3 10.5" D-GR HMA (QCQA) TY-B PG64-22
- A4 5" D-GR HMA (QCQA) TY-B PG64-22
- A5 6" D-GR HMA (QCQA) TY-B PG64-22
- A6 8" D-GR HMA (QCQA) TY-B PG64-22
- A7 D-GR HMA (QCQA) TY-D PG64-22 (LEVEL-UP)
- S1 PRIME COAT (EC-30)
- B1 FL BS (CMP IN PLC) (TY D GR 4) (FNAL POS) (8")
- B2 FL BS (CMP IN PLC) (TY D GR 4) (FNAL POS) (4")
- L1 LIME TRT (EXIST MATL) (18"-36") (SEE SHEET 55C FOR STATION RANGES & DEPTHS)

NOTES:

1. STATION LIMITS SHOWN ARE APPROXIMATE AND FOR NORMAL ROADWAY CONDITIONS. FOR WIDENINGS AND TRANSITIONS, SEE VARIOUS PLAN AND PROFILE SHEETS.
2. SEE TYPICAL SECTIONS MISCELLANEOUS DETAILS SHEET FOR PAVEMENT EDGE AND LIME TREATMENT EXTENSION DETAILS.
3. NORMAL CROSS SLOPES ARE TYPICALLY DISPLAYED. REFER TO ROADWAY PLAN & PROFILE SHEETS AND SUPERELEVATION DATA SHEET FOR ADDITIONAL INFORMATION.

STATE OF TEXAS
SYED S. HAQ
94660
LICENSED
PROFESSIONAL ENGINEER

Syed S. Haq
08/22/2012

KENNEDY CONSULTING
TBPE REGISTRATION NO. F-926

Texas Department of Transportation
© 2012

IH 35W FROM NORTH TARRANT PKWY TO IH 820

TYPICAL SECTIONS
IH 35W FRONTAGE ROAD

SCALE 1" = 10'

SHEET 5 OF 6

DESIGN	FED.RD. DIV.NO.	FEDERAL AID PROJECT NO.		HIGHWAY NO.
KCI	6	(SEE TITLE SHEET)		IH 35W
GRAPHICS	STATE	DISTRICT	COUNTY	SHEET NO.
KCI	TEXAS	FTW	TARRANT	44
CHECK	CONTROL	SECTION	JOB	
KCI	0014	16	255, ETC.	

FILENAME: S3BTYP24.dgn

DRAWING DATE: 8/22/2012

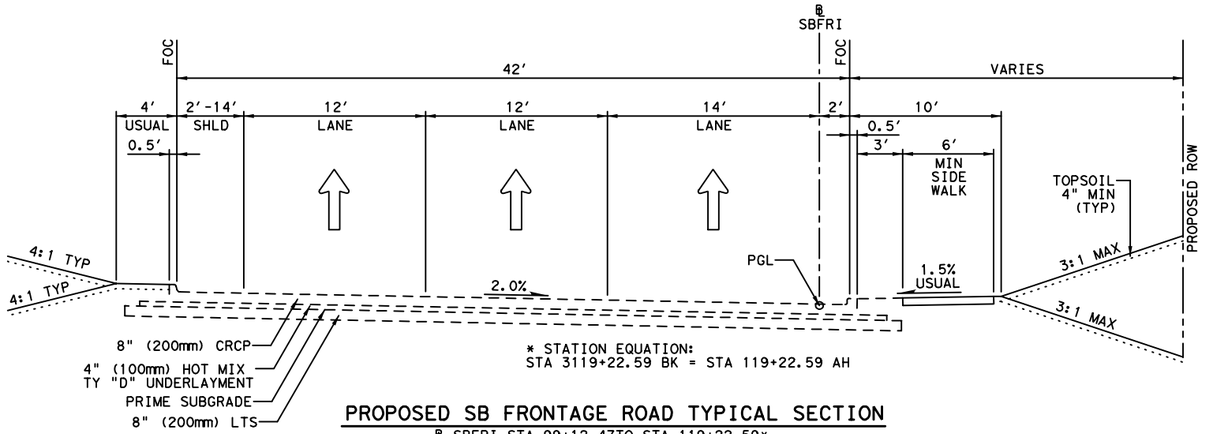

PROPOSED SB FRONTAGE ROAD TYPICAL SECTION

℄ SBFRI STA 99+12.47TO STA 119+22.59*
℄ SBFRI STA 3119+22.59 TO STA 3126+53.05

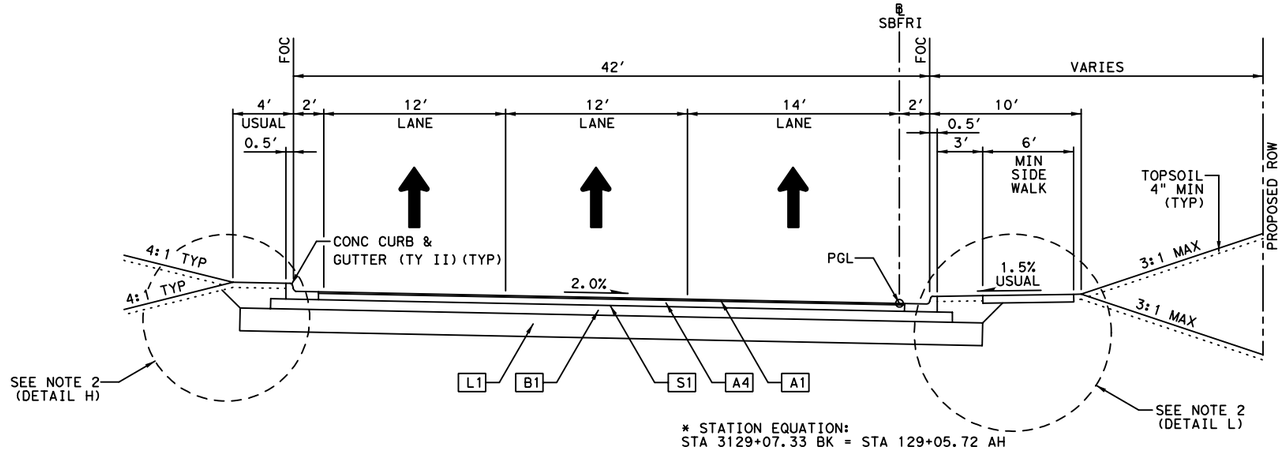

PROPOSED SB FRONTAGE ROAD TYPICAL SECTION

℄ SBFRI STA 3126+53.05 TO STA 131+91.14

REFER TO PLAN & PROFILE SHEETS FOR LIMITS OF BRIDGE

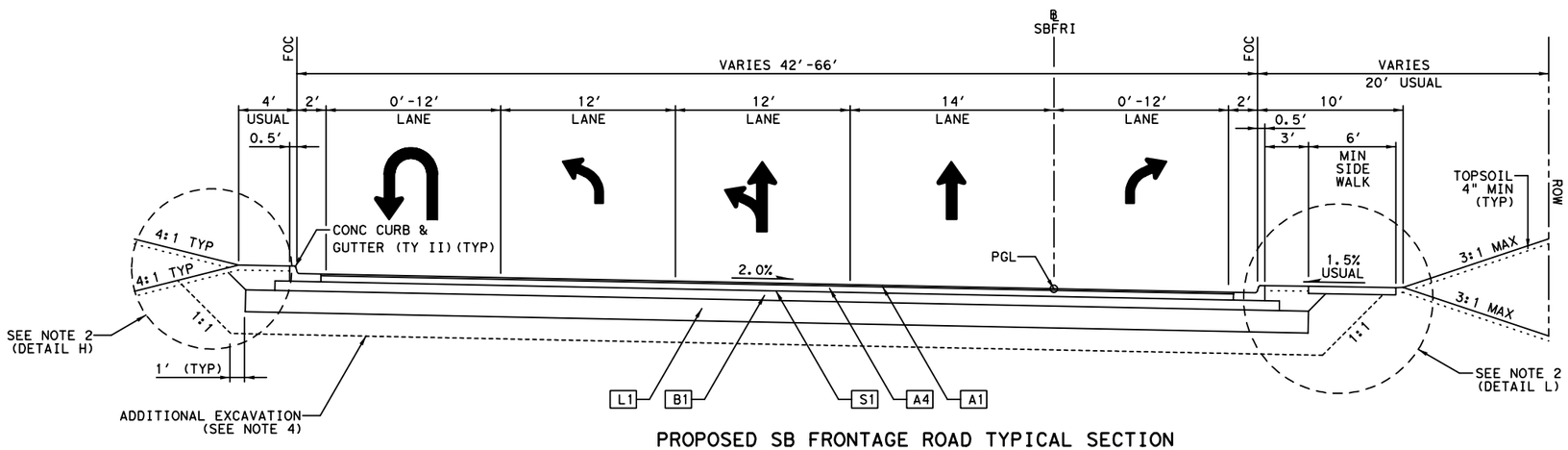

PROPOSED SB FRONTAGE ROAD TYPICAL SECTION

℄ SBFRI STA 131+91.14 TO STA 135+89.72

REFER TO PLAN & PROFILE SHEETS FOR LIMITS OF BRIDGE

0' 5' 10'

SCALE IN FEET

LEGEND:

- A1 1.25" STONE MTRX-ASPH SMA-F SAC-B PG76-22
- A2 9" D-GR HMA(QCQA) TY-B PG64-22
- A3 10.5" D-GR HMA(QCQA) TY-B PG64-22
- A4 5" D-GR HMA(QCQA) TY-B PG64-22
- A5 6" D-GR HMA(QCQA) TY-B PG64-22
- A6 8" D-GR HMA(QCQA) TY-B PG64-22
- A7 D-GR HMA (QCQA) TY-D PG64-22 (LEVEL-UP)
- S1 PRIME COAT(EC-30)
- B1 FL BS (CMP IN PLC)(TY D GR 4)(FNAL POS)(8")
- B2 FL BS (CMP IN PLC)(TY D GR 4)(FNAL POS)(4")
- L1 LIME TRT (EXIST MATL)(18"-36") (SEE SHEET 55C FOR STATION RANGES & DEPTHS)

NOTES:

1. STATION LIMITS SHOWN ARE APPROXIMATE AND FOR NORMAL ROADWAY CONDITIONS. FOR WIDENINGS AND TRANSITIONS, SEE VARIOUS PLAN AND PROFILE SHEETS.
2. SEE TYPICAL SECTIONS MISCELLANEOUS DETAILS SHEET FOR PAVEMENT EDGE AND LIME TREATMENT EXTENSION DETAILS.
3. NORMAL CROSS SLOPES ARE TYPICALLY DISPLAYED. REFER TO ROADWAY PLAN & PROFILE SHEETS AND SUPERELEVATION DATA SHEET FOR ADDITIONAL INFORMATION.
4. SEE SHEET 55C FOR APPLICABLE STATION RANGES AND DEPTHS OF NON-SWELLING SELECT FILL MATERIAL (TY C1 EMBANKMENT).
5. REFER TO ROADWAY PLAN & PROFILE SHEETS FOR MBGF & BARRIER LOCATIONS.
6. REFER TO PAVEMENT MARKING & DELINEATION PLAN FOR STRIPING CONFIGURATION FROM STA 116+96.11 TO STA 3126+53.05

STATE OF TEXAS
SYED S. HAQ
94660
LICENSED
PROFESSIONAL ENGINEER

Syed S. Haq
08/22/2012

KENNEDY CONSULTING
TBPE REGISTRATION NO. F-926

Texas Department of Transportation
© 2012

IH 35W FROM NORTH TARRANT PKWY TO IH 820

TYPICAL SECTIONS
IH 35W FRONTAGE ROAD

SCALE 1" = 10'

SHEET 6 OF 6

DESIGN	FED.RD. DIV.NO.	FEDERAL AID PROJECT NO.		HIGHWAY NO.
KCI	6	(SEE TITLE SHEET)		IH 35W
GRAPHICS	STATE	DISTRICT	COUNTY	SHEET NO.
KCI	TEXAS	FTW	TARRANT	45
CHECK	CONTROL	SECTION	JOB	
KCI	0014	16	255, ETC.	

FILENAME: S3BTYP25.dgn

DRAWING DATE: 8/22/2012

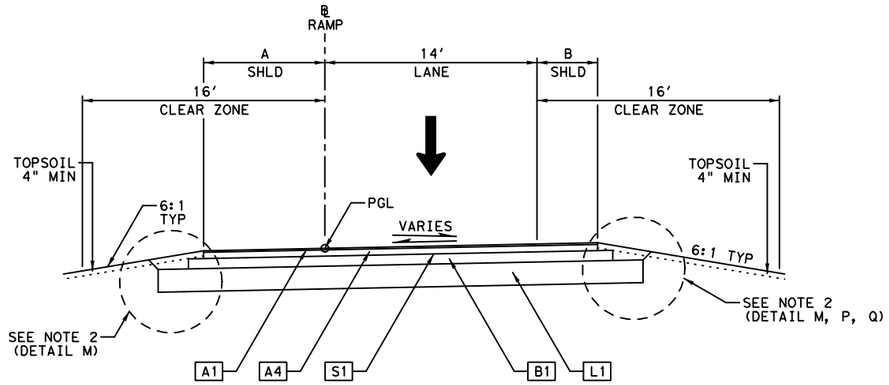

PROPOSED NORTH BOUND RAMP TYPICAL SECTION

℄ 35N-NTP STA 12+81.34 TO STA 23+27.71
℄ BB-35N STA 15+57.14 TO STA 26+91.14
℄ BB-287W STA 13+07.13 TO STA 20+19.73
℄ WCB-35N STA 15+93.46 TO STA 22+25.00
℄ 35N-WCB STA 14+53.39 TO STA 23+60.54

RAMP	A	B	STATION
35N-NTP	8′	4′	12+81.34 TO 23+28.95
BB-35N	8′	4′	15+57.14 TO 26+01.14
BB-287W	8′	4′	13+07.13 TO 20+19.73
WCB-35N	6′	4′	15+93.46 TO 22+25.00
35N-WCB	8′	4′	14+53.39 TO 23+60.54

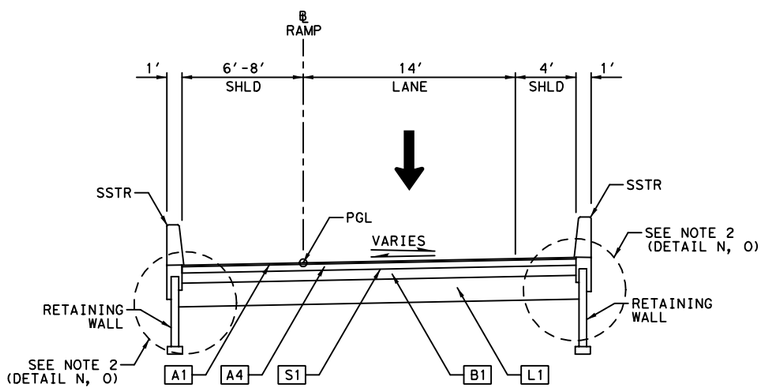

PROPOSED NORTH BOUND RAMP TYPICAL SECTION

℄ MLN-BB STA 18+94.35 TO STA 40+07.98*
℄ 35N-BB STA 21+12.95 TO STA 31+21.62*

* REFER TO PLAN & PROFILE SHEETS FOR LIMITS OF BRIDGE

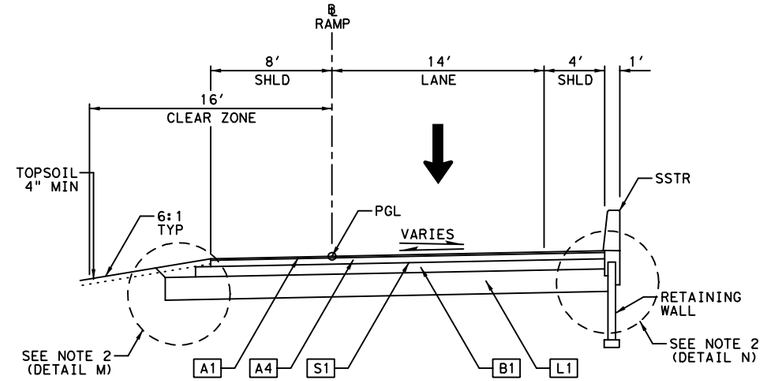

PROPOSED NORTH BOUND RAMP TYPICAL SECTION

℄ MLN-BB STA 16+71.05 TO STA 18+94.35
℄ 35N-WCB STA 13+72.94 TO STA 14+52.39

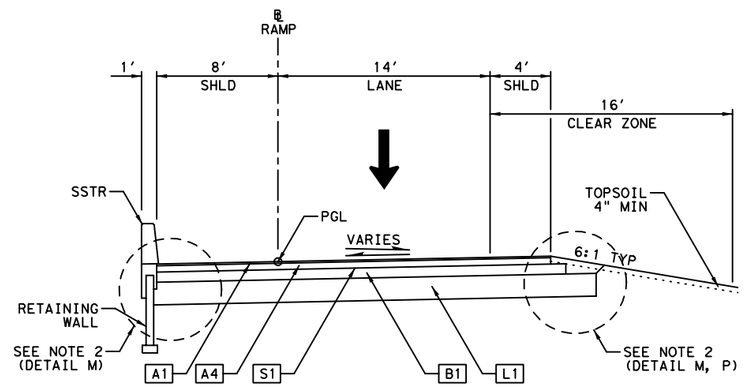

PROPOSED NORTH BOUND RAMP TYPICAL SECTION

℄ 35N-BB STA 31+21.62 TO STA 33+42.74

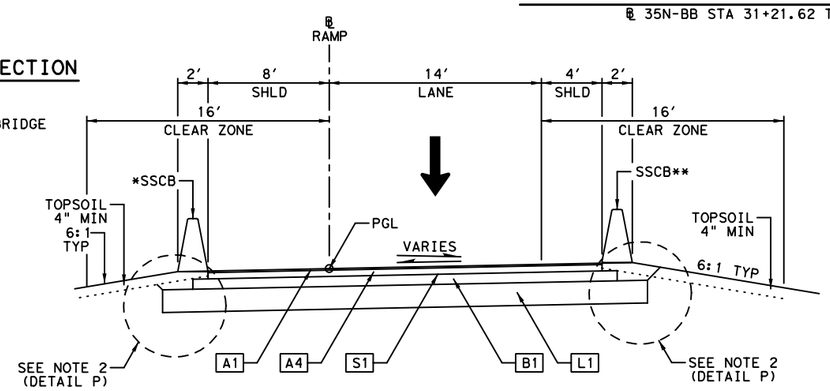

* SSCB OMITTED:
FROM ℄ 35N-WCB STA 14+52.38 TO STA 23+59.29

** SSCB OMITTED:
FROM ℄ MLN-BB STA 40+03.16 TO STA 40+40.69

PROPOSED NORTH BOUND RAMP TYPICAL SECTION

℄ MLN-BB STA 39+11.36 TO STA 40+40.69

0′ 5′ 10′
SCALE IN FEET

LEGEND:

- A1 1.25" STONE MTRX-ASPH SMA-F SAC-B PG76-22
- A2 9" D-GR HMA(QCQA) TY-B PG64-22
- A3 10.5" D-GR HMA(QCQA) TY-B PG64-22
- A4 5" D-GR HMA(QCQA) TY-B PG64-22
- A5 6" D-GR HMA(QCQA) TY-B PG64-22
- A6 8" D-GR HMA(QCQA) TY-B PG64-22
- A7 D-GR HMA (QCQA) TY-D PG64-22 (LEVEL-UP)
- S1 PRIME COAT(EC-30)
- B1 FL BS (CMP IN PLC)(TY D GR 4)(FNAL POS)(8")
- B2 FL BS (CMP IN PLC)(TY D GR 4)(FNAL POS)(4")
- L1 LIME TRT (EXIST MATL)(18"-36") (SEE SHEET 55C FOR STATION RANGES & DEPTHS)

NOTES:

1. STATION LIMITS SHOWN ARE APPROXIMATE AND FOR NORMAL ROADWAY CONDITIONS. FOR WIDENINGS AND TRANSITIONS, SEE VARIOUS PLAN AND PROFILE SHEETS.
2. SEE TYPICAL SECTIONS MISCELLANEOUS DETAILS SHEET FOR PAVEMENT EDGE AND LIME TREATMENT EXTENSION DETAILS.
3. NORMAL CROSS SLOPES ARE TYPICALLY DISPLAYED. REFER TO ROADWAY PLAN & PROFILE SHEETS AND SUPERELEVATION DATA SHEET FOR ADDITIONAL INFORMATION.
4. SEE SHEET 55C FOR APPLICABLE STATION RANGES AND DEPTHS OF NON-SWELLING SELECT FILL MATERIAL (TY C1 EMBANKMENT).
5. REFER TO ROADWAY PLAN & PROFILE SHEETS FOR MBGF & BARRIER LOCATIONS.

KENNEDY CONSULTING
TBPE REGISTRATION NO. F-926

Texas Department of Transportation
© 2012

IH 35W FROM NORTH TARRANT PKWY TO IH 820

TYPICAL SECTIONS
RAMPS

SCALE 1" = 10′ SHEET 1 OF 2

DESIGN	FED.RD. DIV.NO.	FEDERAL AID PROJECT NO.		HIGHWAY NO.
KCI	6	(SEE TITLE SHEET)		IH 35W
GRAPHICS KCI	STATE	DISTRICT	COUNTY	SHEET NO.
CHECK KCI	TEXAS	FTW	TARRANT	46
CHECK KCI	CONTROL 0014	SECTION 16	JOB 255, ETC.	

FILENAME: S3BTYP26.dgn
DRAWING DATE: 8/22/2012

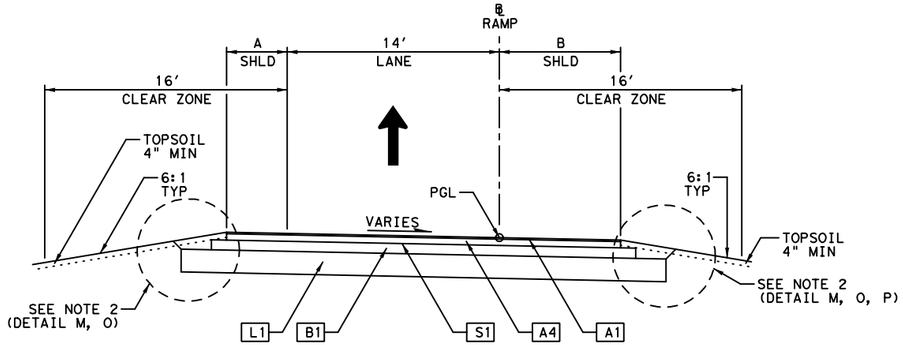

PROPOSED SOUTH BOUND RAMP TYPICAL SECTION

℄ NTP-35S STA 13+38.76 TO STA 19+08.51
℄ BB-MLS STA 11+31.17 TO STA 19+60.85
℄ BB-MLS STA 40+18.17 TO STA 40+46.96
℄ 35S-WCB STA 12+48.52 TO STA 15+50.00
℄ 35S-WCB STA 17+98.31 TO STA 19+23.67
℄ WCB-35S STA 18+46.30 TO STA 21+04.16

REFER TO TYPICAL SECTIONS-MISCELLANEOUS DETAILS FOR TOLLING ZONE SECTIONS.

RAMP	A	B	STATION
NTP-35S	4′	8′	13+38.76 TO 19+08.51
BB-MLS	4′	8′	11+31.17 TO 19+60.85
BB-MLS	4′	8′	40+18.17 TO 40+46.96
35S-WCB	4′	6′	12+48.52 TO 15+50.00
35S-WCB	4′	6′	17+98.31 TO 19+23.67
WCB-35S	4′	8′	18+46.30 TO 21+04.16

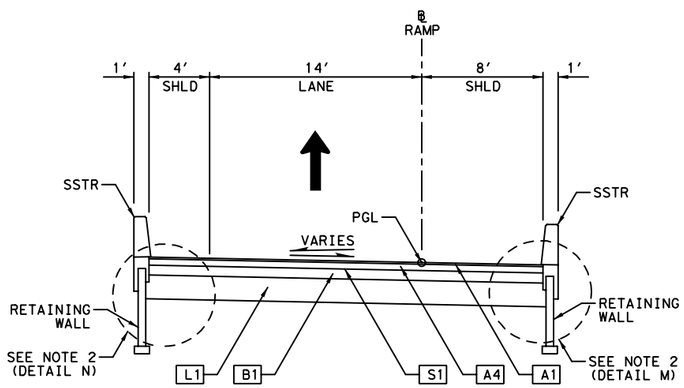

PROPOSED SOUTH BOUND RAMP TYPICAL SECTION

℄ BB-MLS STA 21+80.17 TO STA 38+82.17
℄ BB-35S STA 18+80.31 TO STA 23+78.58

REFER TO PLAN & PROFILE SHEETS FOR LIMITS OF BRIDGE.
REFER TO TYPICAL SECTIONS-MISCELLANEOUS DETAILS FOR TOLLING ZONE SECTIONS.

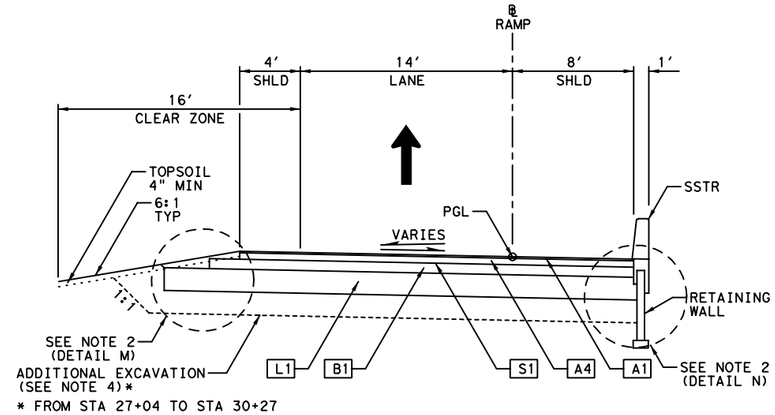

* FROM STA 27+04 TO STA 30+27

PROPOSED SOUTH BOUND RAMP TYPICAL SECTION

℄ BB-MLS STA 38+82.17 TO STA 40+18.17
℄ BB-35S STA 23+78.58 TO STA 30+26.57

REFER TO PLAN & PROFILE SHEETS FOR LIMITS OF BRIDGE

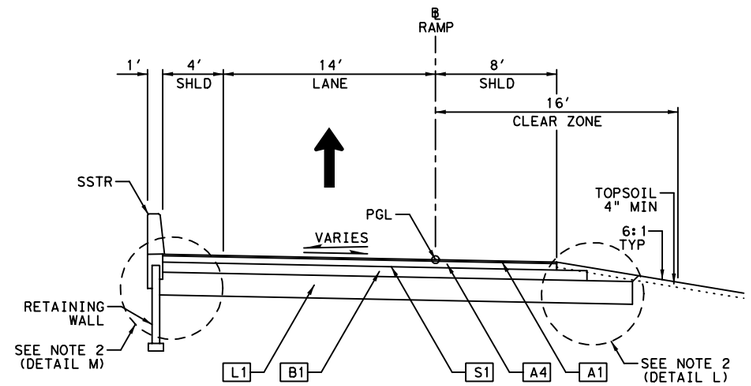

PROPOSED SOUTH BOUND RAMP TYPICAL SECTION

℄ BB-MLS STA 19+60.85 TO STA 21+80.17
℄ WCB-35S STA 14+33.30 TO STA 18+46.30

REFER TO TYPICAL SECTIONS-MISCELLANEOUS DETAILS FOR TOLLING ZONE SECTIONS.

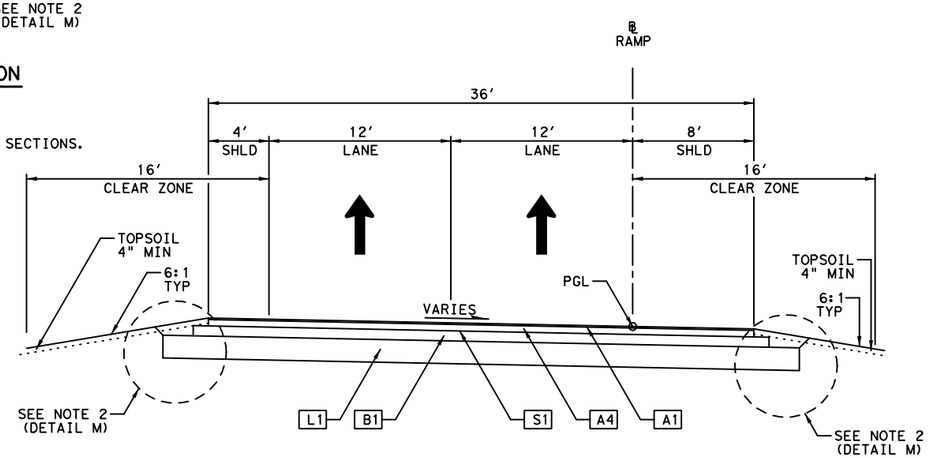

PROPOSED SOUTHBOUND RAMP TYPICAL SECTION

℄ 35S-BB STA 14+88.71 TO STA 21+41.28

0′ 5′ 10′
SCALE IN FEET

LEGEND:

- A1 1.25" STONE MTRX-ASPH SMA-F SAC-B PG76-22
- A2 9" D-GR HMA(QCQA) TY-B PG64-22
- A3 10.5" D-GR HMA(QCQA) TY-B PG64-22
- A4 5" D-GR HMA(QCQA) TY-B PG64-22
- A5 6" D-GR HMA(QCQA) TY-B PG64-22
- A6 8" D-GR HMA(QCQA) TY-B PG64-22
- A7 D-GR HMA (QCQA) TY-D PG64-22 (LEVEL-UP)
- S1 PRIME COAT(EC-30)
- B1 FL BS (CMP IN PLC)(TY D GR 4)(FNAL POS)(8")
- B2 FL BS (CMP IN PLC)(TY D GR 4)(FNAL POS)(4")
- L1 LIME TRT (EXIST MATL)(18"-36") (SEE SHEET 55C FOR STATION RANGES & DEPTHS)

NOTES:

1. STATION LIMITS SHOWN ARE APPROXIMATE AND FOR NORMAL ROADWAY CONDITIONS. FOR WIDENINGS AND TRANSITIONS, SEE VARIOUS PLAN AND PROFILE SHEETS.
2. SEE TYPICAL SECTIONS MISCELLANEOUS DETAILS SHEET FOR PAVEMENT EDGE AND LIME TREATMENT EXTENSION DETAILS.
3. NORMAL CROSS SLOPES ARE TYPICALLY DISPLAYED. REFER TO ROADWAY PLAN & PROFILE SHEETS AND SUPERELEVATION DATA SHEET FOR ADDITIONAL INFORMATION.
4. SEE SHEET 55C FOR APPLICABLE STATION RANGES AND DEPTHS OF NON-SWELLING SELECT FILL MATERIAL (TY C1 EMBANKMENT).
5. REFER TO ROADWAY PLAN & PROFILE SHEETS FOR MBGF & BARRIER LOCATIONS.

STATE OF TEXAS
SYED S. HAQ
94660
LICENSED
PROFESSIONAL ENGINEER
Syed S. Haq
08/22/2012

KENNEDY CONSULTING
TBPE REGISTRATION NO. F-926

Texas Department of Transportation
© 2012

IH 35W FROM NORTH TARRANT PKWY TO IH 820

TYPICAL SECTIONS
RAMPS

SCALE 1" = 10′ SHEET 2 OF 2

DESIGN KCI	FED.RD. DIV.NO.	FEDERAL AID PROJECT NO.		HIGHWAY NO.
GRAPHICS KCI	6	(SEE TITLE SHEET)		IH 35W
	STATE	DISTRICT	COUNTY	SHEET NO.
CHECK KCI	TEXAS	FTW	TARRANT	47
	CONTROL	SECTION	JOB	
CHECK KCI	0014	16	255, ETC.	

FILENAME: S3BTYP26A.dgn
DRAWING DATE: 8/22/2012

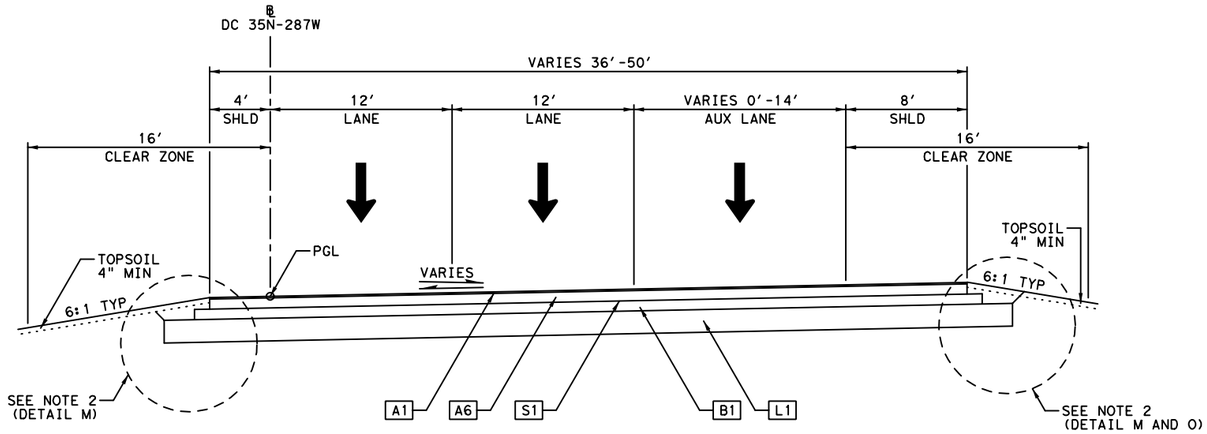

PROPOSED DIRECT CONNECTOR TYPICAL SECTION

℄ 35N-287W STA 38+06.97 TO STA 46+53.06

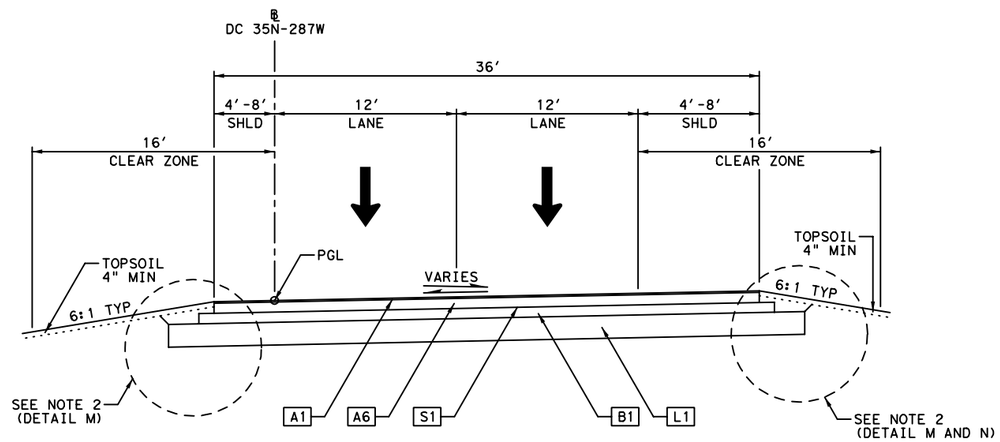

PROPOSED DIRECT CONNECTOR TYPICAL SECTION

℄ 35N-287W STA 46+53.06 TO STA 61+05.08*
℄ 35N-287W STA 72+74.59 TO STA 87+21.69

* REFER TO PLAN & PROFILE SHEETS
FOR LIMITS OF BRIDGE AND RETAINING WALL

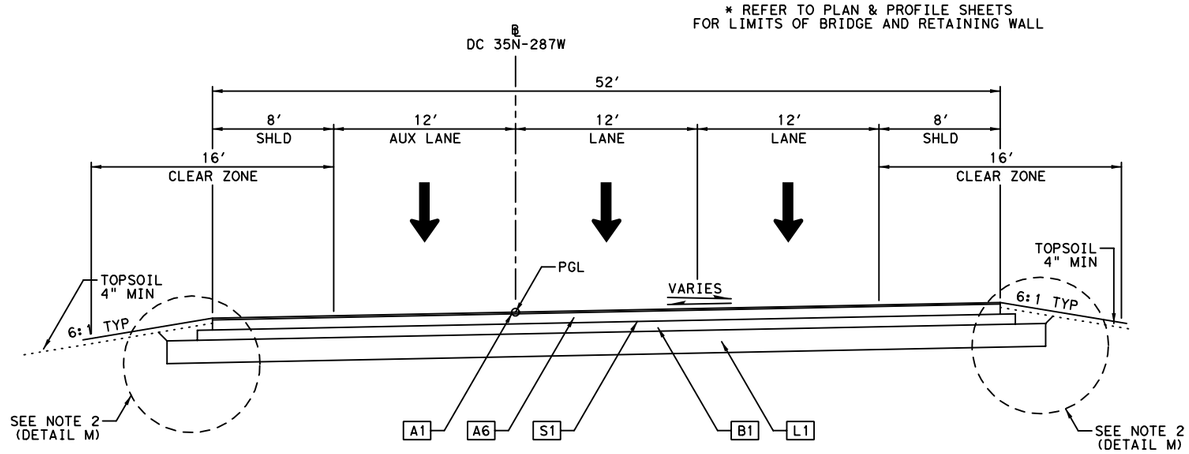

PROPOSED DIRECT CONNECTOR TYPICAL SECTION

℄ 35N-287W STA 61+05.08 TO STA 72+74.59

0' 5' 10'

SCALE IN FEET

LEGEND:

- A1 1.25" STONE MTRX-ASPH SMA-F SAC-B PG76-22
- A2 9" D-GR HMA(QCQA) TY-B PG64-22
- A3 10.5" D-GR HMA(QCQA) TY-B PG64-22
- A4 5" D-GR HMA(QCQA) TY-B PG64-22
- A5 6" D-GR HMA(QCQA) TY-B PG64-22
- A6 8" D-GR HMA(QCQA) TY-B PG64-22
- A7 D-GR HMA (QCQA) TY-D PG64-22 (LEVEL-UP)
- S1 PRIME COAT(EC-30)
- B1 FL BS (CMP IN PLC)(TY D GR 4)(FNAL POS)(8")
- B2 FL BS (CMP IN PLC)(TY D GR 4)(FNAL POS)(4")
- L1 LIME TRT (EXIST MATL)(18"-36") (SEE SHEET 55C FOR STATION RANGES & DEPTHS)

NOTES:

1. STATION LIMITS SHOWN ARE APPROXIMATE AND FOR NORMAL ROADWAY CONDITIONS. FOR WIDENINGS AND TRANSITIONS, SEE VARIOUS PLAN AND PROFILE SHEETS.
2. SEE TYPICAL SECTIONS MISCELLANEOUS DETAILS SHEET FOR PAVEMENT EDGE AND LIME TREATMENT EXTENSION DETAILS.
3. NORMAL CROSS SLOPES ARE TYPICALLY DISPLAYED. REFER TO ROADWAY PLAN & PROFILE SHEETS AND SUPERELEVATION DATA SHEET FOR ADDITIONAL INFORMATION.
4. SEE SHEET 55C FOR APPLICABLE STATION RANGES AND DEPTHS OF NON-SWELLING SELECT FILL MATERIAL (TY C1 EMBANKMENT).
5. REFER TO ROADWAY PLAN & PROFILE SHEETS FOR MBGF & BARRIER LOCATIONS.

STATE OF TEXAS
SYED S. HAQ
94660
LICENSED
PROFESSIONAL ENGINEER

Syed S. Haq
08/22/2012

KENNEDY CONSULTING
TBPE REGISTRATION NO. F-926

Texas Department of Transportation
© 2012

IH 35W FROM NORTH TARRANT PKWY TO IH 820

TYPICAL SECTIONS
DIRECT CONNECTOR

SCALE 1" = 10' SHEET 1 OF 2

DESIGN	FED.RD. DIV.NO.	FEDERAL AID PROJECT NO.		HIGHWAY NO.
KCI	6	(SEE TITLE SHEET)		IH 35W
GRAPHICS	STATE	DISTRICT	COUNTY	SHEET NO.
KCI	TEXAS	FTW	TARRANT	48
CHECK	CONTROL	SECTION	JOB	
KCI	0014	16	255, ETC.	

FILENAME: S3BTYP27.dgn

DRAWING DATE: 8/22/2012

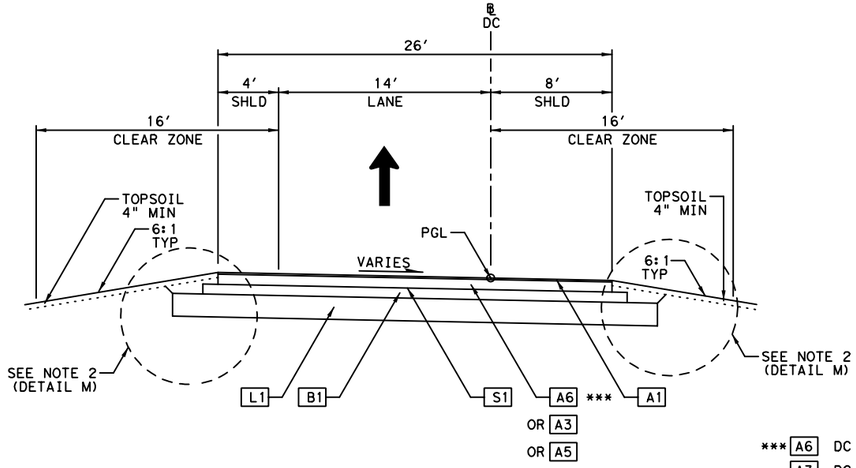

*** A6 DC 35S-287W
A3 DC 35S-820W
A5 DC 287E-MLS

PROPOSED DIRECT CONNECTOR TYPICAL SECTION

℄ 35S-287W STA 15+29.03 TO STA 28+55.56**
℄ 287E-MLS STA 44+32.09 TO STA 56+63.20*
℄ 287E-MLS STA 66+27.53 TO STA 70+90.09
℄ 35S-820W STA 17+87.93 TO STA 19+78.51

* REFER TO PLAN & PROFILE SHEETS FOR LIMITS OF BRIDGE
** DESIGN SPEED OF THIS CONNECTOR IS 40 MPH

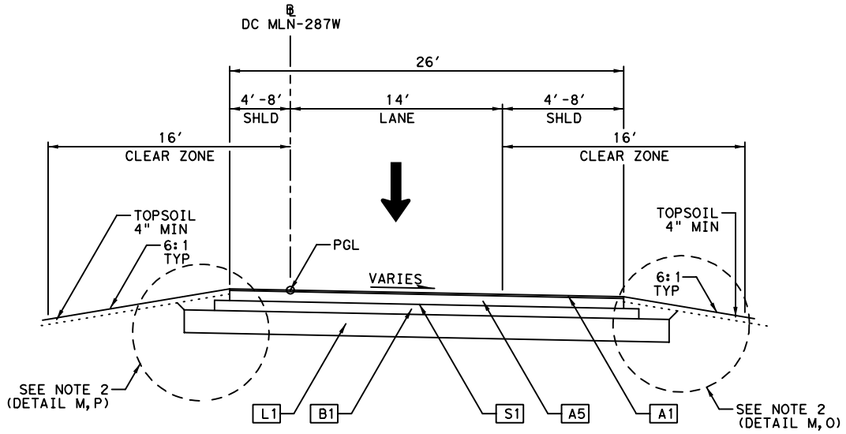

PROPOSED DIRECT CONNECTOR TYPICAL SECTION

℄ MLN-287W STA 49+31.14 TO STA 61+62.00*
℄ MLN-287W STA 67+10.96 TO STA 69+40.41

* REFER TO PLAN & PROFILE SHEETS FOR LIMITS OF BRIDGE

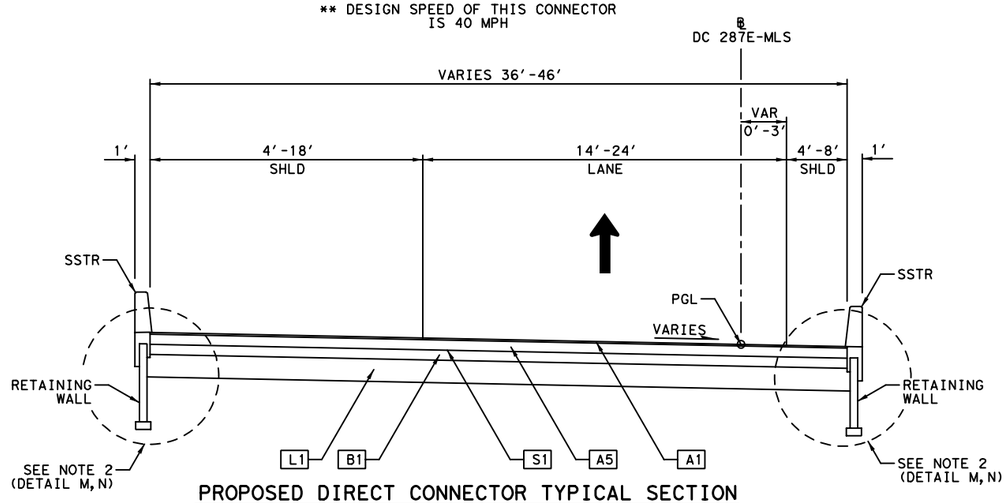

PROPOSED DIRECT CONNECTOR TYPICAL SECTION

℄ 287E-MLS STA 56+63.20 TO STA 66+27.53*

* REFER TO PLAN & PROFILE SHEETS FOR LIMITS OF BRIDGE

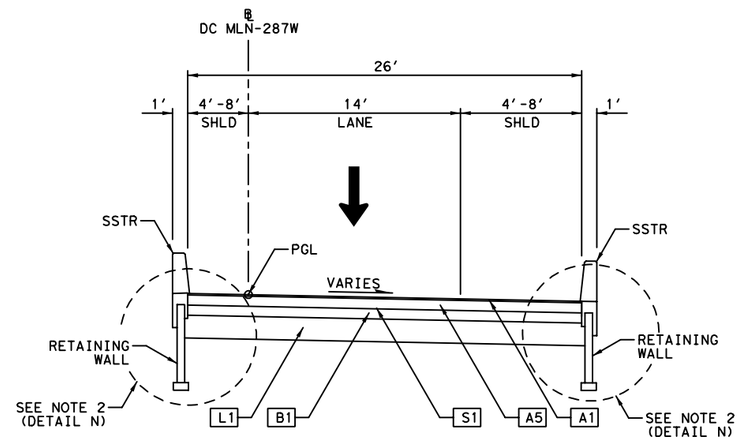

PROPOSED DIRECT CONNECTOR TYPICAL SECTION

℄ MLN-287W STA 61+62.00 TO STA 67+10.96

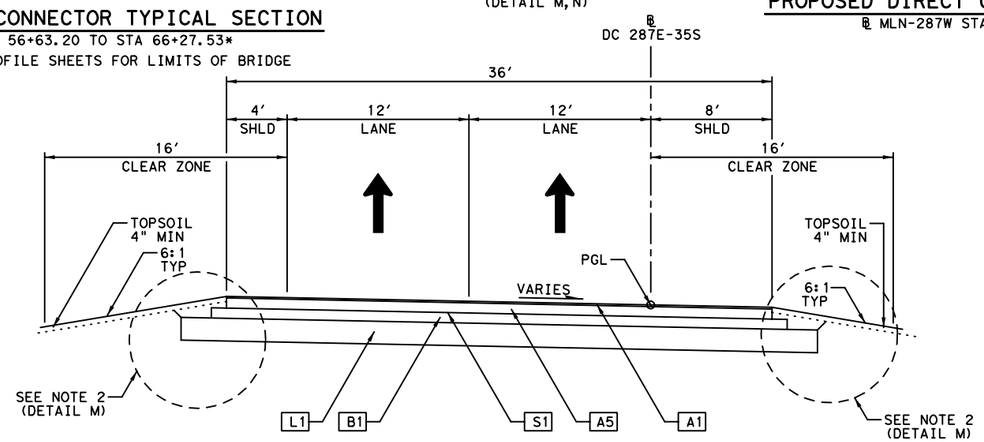

PROPOSED DIRECT CONNECTOR TYPICAL SECTION

℄ 287E-35S STA 50+65.00 TO STA 57+46.82

0′ 5′ 10′
SCALE IN FEET

LEGEND:

- A1 1.25" STONE MTRX-ASPH SMA-F SAC-B PG76-22
- A2 9" D-GR HMA(QCQA) TY-B PG64-22
- A3 10.5" D-GR HMA(QCQA) TY-B PG64-22
- A4 5" D-GR HMA(QCQA) TY-B PG64-22
- A5 6" D-GR HMA(QCQA) TY-B PG64-22
- A6 8" D-GR HMA(QCQA) TY-B PG64-22
- A7 D-GR HMA (QCQA) TY-D PG64-22 (LEVEL-UP)
- S1 PRIME COAT(EC-30)
- B1 FL BS (CMP IN PLC)(TY D GR 4)(FNAL POS)(8")
- B2 FL BS (CMP IN PLC)(TY D GR 4)(FNAL POS)(4")
- L1 LIME TRT (EXIST MATL)(18"-36") (SEE SHEET 55C FOR STATION RANGES & DEPTHS)

NOTES:

1. STATION LIMITS SHOWN ARE APPROXIMATE AND FOR NORMAL ROADWAY CONDITIONS. FOR WIDENINGS AND TRANSITIONS, SEE VARIOUS PLAN AND PROFILE SHEETS.
2. SEE TYPICAL SECTIONS MISCELLANEOUS DETAILS SHEET FOR PAVEMENT EDGE AND LIME TREATMENT EXTENSION DETAILS.
3. NORMAL CROSS SLOPES ARE TYPICALLY DISPLAYED. REFER TO ROADWAY PLAN & PROFILE SHEETS AND SUPERELEVATION DATA SHEET FOR ADDITIONAL INFORMATION.
4. SEE SHEET 55C FOR APPLICABLE STATION RANGES AND DEPTHS OF NON-SWELLING SELECT FILL MATERIAL (TY C1 EMBANKMENT).
5. REFER TO ROADWAY PLAN & PROFILE SHEETS FOR MBGF & BARRIER LOCATIONS.

STATE OF TEXAS
SYED S. HAQ
94660
LICENSED
PROFESSIONAL ENGINEER
08/22/2012

KENNEDY CONSULTING
TBPE REGISTRATION NO. F-926

Texas Department of Transportation
© 2012

IH 35W FROM NORTH TARRANT PKWY TO IH 820

TYPICAL SECTIONS
DIRECT CONNECTOR

SCALE 1" = 10′ SHEET 2 OF 2

DESIGN	FED.RD. DIV.NO.	FEDERAL AID PROJECT NO.		HIGHWAY NO.
KCI	6	(SEE TITLE SHEET)		IH 35W
GRAPHICS KCI	STATE	DISTRICT	COUNTY	SHEET NO.
CHECK KCI	TEXAS	FTW	TARRANT	49
CHECK KCI	CONTROL	SECTION	JOB	
	0014	16	255, ETC.	

FILENAME: S3BTYP27A.dgn
DRAWING DATE: 8/22/2012

0′ 5′ 10′

SCALE IN FEET

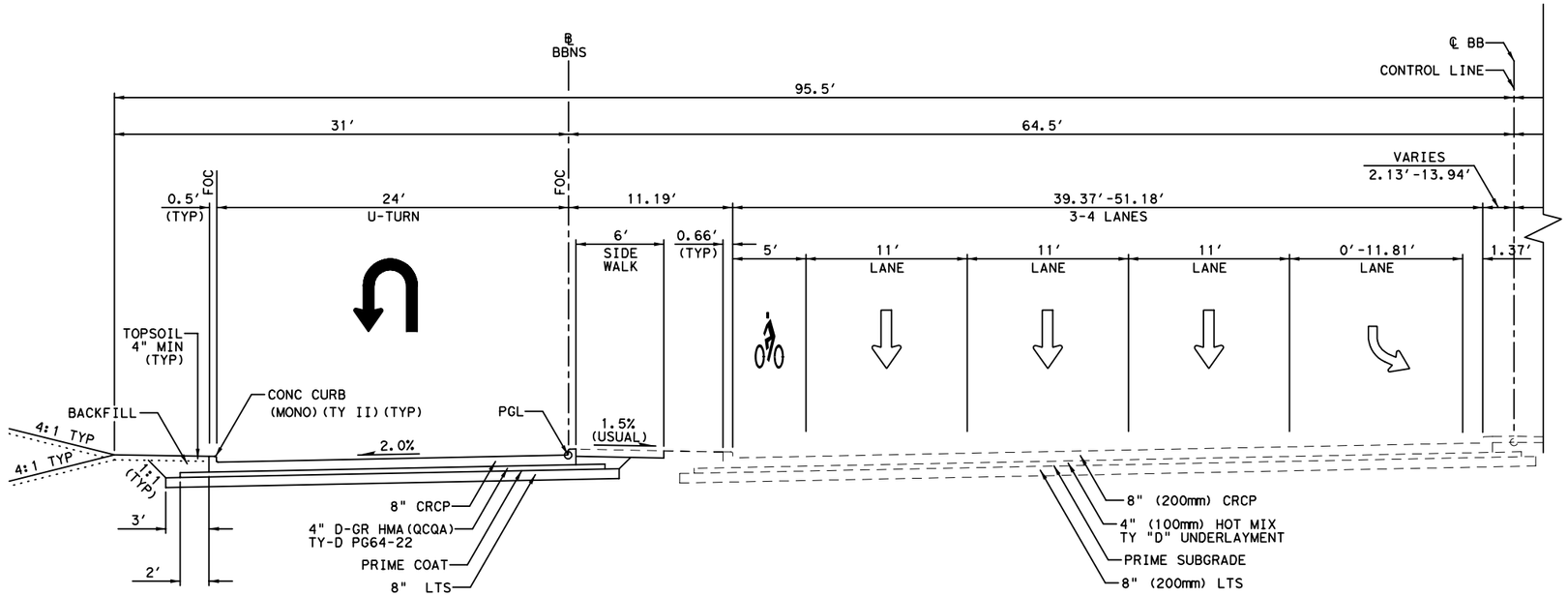

PROPOSED CROSS STREET TYPICAL SECTION

℄ BB STA 16+82.13 TO STA 18+03.00

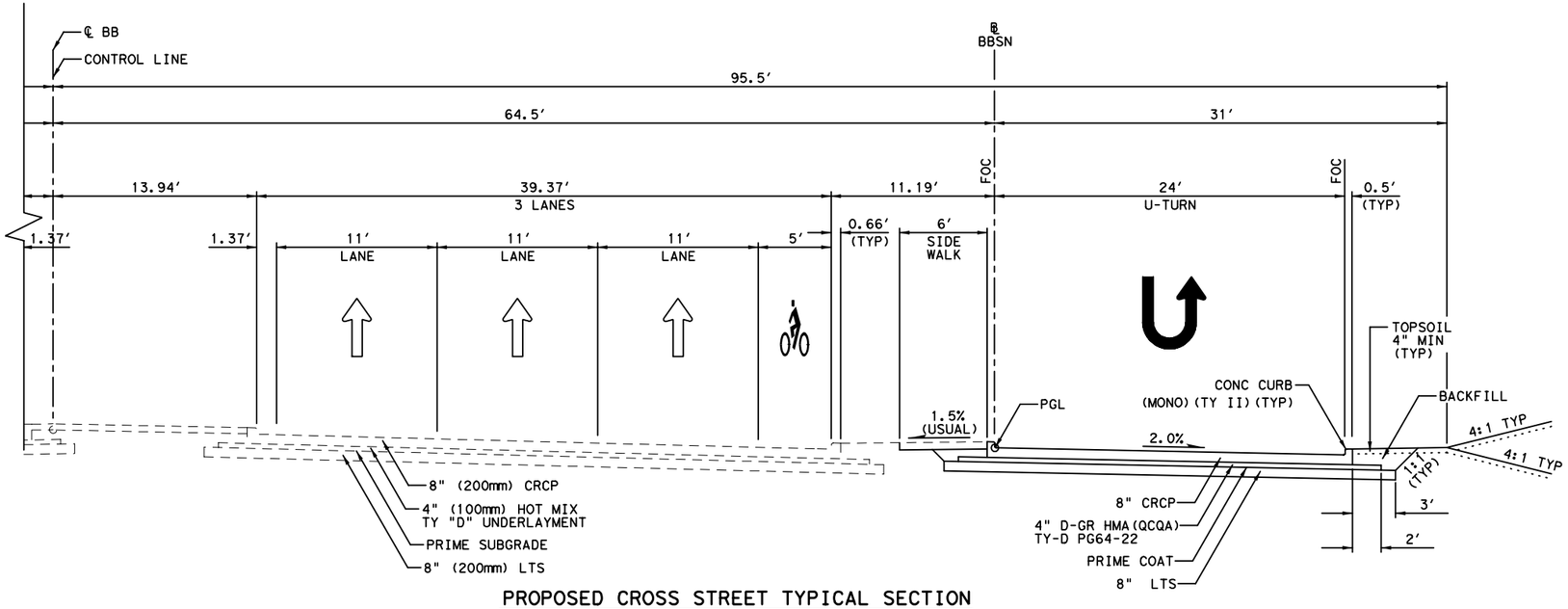

PROPOSED CROSS STREET TYPICAL SECTION

℄ BB STA 16+82.13 TO STA 18+03.00

NOTES:

1. STATION LIMITS SHOWN ARE APPROXIMATE AND FOR NORMAL ROADWAY CONDITIONS. FOR WIDENINGS AND TRANSITIONS, SEE VARIOUS PLAN AND PROFILE SHEETS.
2. NORMAL CROSS SLOPES ARE TYPICALLY DISPLAYED. REFER TO ROADWAY PLAN & PROFILE SHEETS AND SUPERELEVATION DATA SHEET FOR ADDITIONAL INFORMATION.
3. TY C EMBANKMENT WILL BE USED FOR PAVEMENT EDGE BACKFILL.

STATE OF TEXAS
SYED S. HAQ
94660
LICENSED
PROFESSIONAL ENGINEER

Syed S. Haq
08/22/2012

KENNEDY CONSULTING
TBPE REGISTRATION NO. F-926

Texas Department of Transportation
© 2012

IH 35W FROM NORTH TARRANT PKWY TO IH 820

TYPICAL SECTIONS
CROSS STREETS

SCALE 1" = 10′ SHEET 1 OF 4

DESIGN	FED.RD. DIV.NO.	FEDERAL AID PROJECT NO.		HIGHWAY NO.
KCI	6	(SEE TITLE SHEET)		IH 35W
GRAPHICS	STATE	DISTRICT	COUNTY	SHEET NO.
KCI	TEXAS	FTW	TARRANT	50
CHECK	CONTROL	SECTION	JOB	
KCI	0014	16	255, ETC.	

CHECK KCI

FILENAME: S3BTYP28.dgn

DRAWING DATE: 8/22/2012

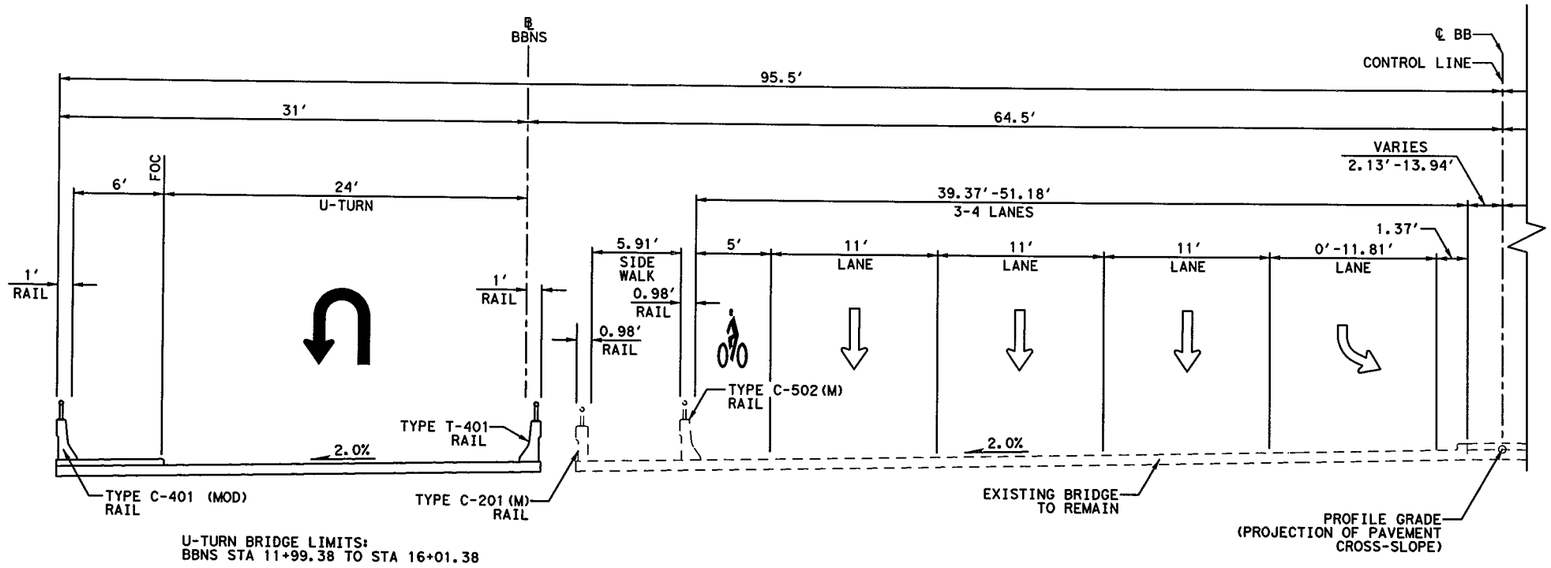

U-TURN BRIDGE LIMITS:
BBNS STA 11+99.38 TO STA 16+01.38

PROPOSED CROSS STREET TYPICAL SECTION THRU BRIDGE

℄ BB STA 18+03.00 TO STA 22+04.04

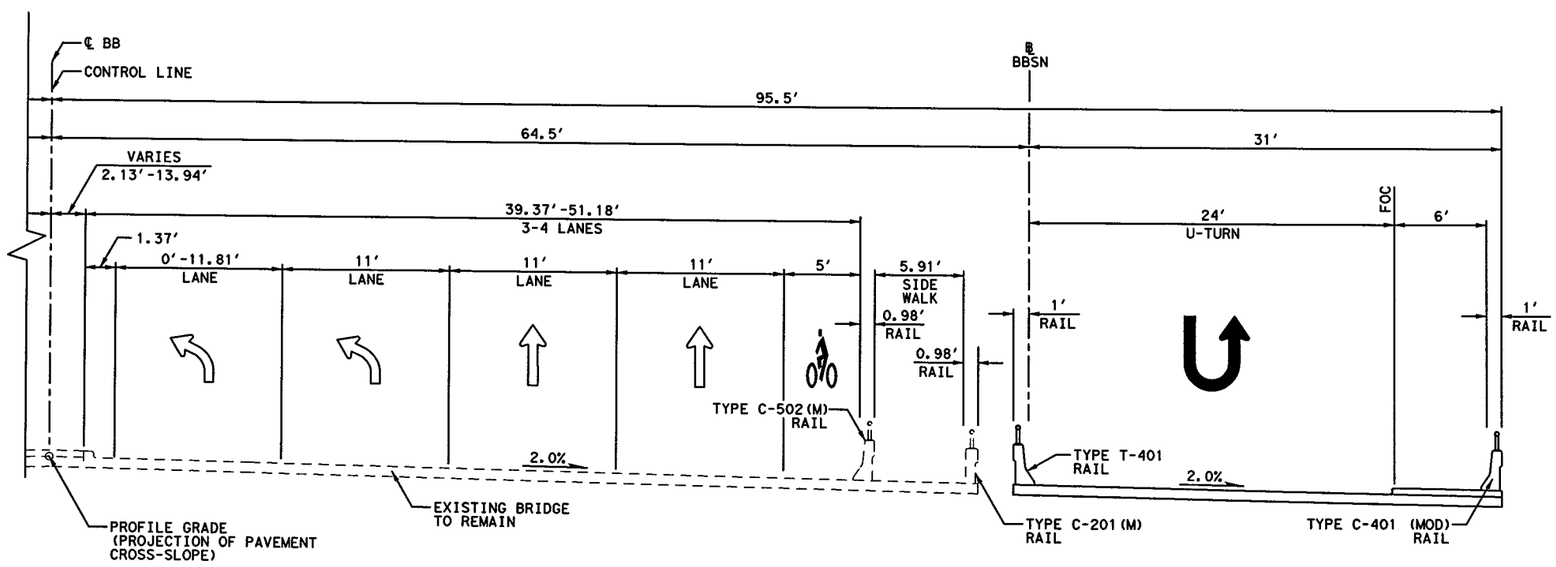

PROPOSED CROSS STREET TYPICAL SECTION THRU BRIDGE

℄ BB STA 18+03.00 TO STA 22+04.04

0' 5' 10'

SCALE IN FEET

NOTES:

1. STATION LIMITS SHOWN ARE APPROXIMATE AND FOR NORMAL ROADWAY CONDITIONS. FOR WIDENINGS AND TRANSITIONS, SEE VARIOUS PLAN AND PROFILE SHEETS.
2. NORMAL CROSS SLOPES ARE TYPICALLY DISPLAYED. REFER TO ROADWAY PLAN & PROFILE SHEETS AND SUPERELEVATION DATA SHEET FOR ADDITIONAL INFORMATION.
3. REFER TO BRIDGE PLANS FOR ADDITIONAL INFORMATION.

STATE OF TEXAS
SYED S. HAQ
94660
LICENSED
PROFESSIONAL ENGINEER

Syed Sajidul Haq 07/13/12

KENNEDY CONSULTING
TBPE REGISTRATION NO. F-926

Texas Department of Transportation
© 2012

IH 35W FROM NORTH TARRANT PKWY TO IH 820

TYPICAL SECTIONS
CROSS STREETS

SCALE 1" = 10'

SHEET 2 OF 4

DESIGN	FED.RD. DIV.NO.	FEDERAL AID PROJECT NO.		HIGHWAY NO.
KCI	6	(SEE TITLE SHEET)		IH 35W
GRAPHICS	STATE	DISTRICT	COUNTY	SHEET NO.
KCI	TEXAS	FTW	TARRANT	51
CHECK	CONTROL	SECTION	JOB	
KCI	0014	16	255, ETC.	
CHECK				
KCI				

FILENAME: S3BTYP28A.dgn

DRAWING DATE: 7/13/2012

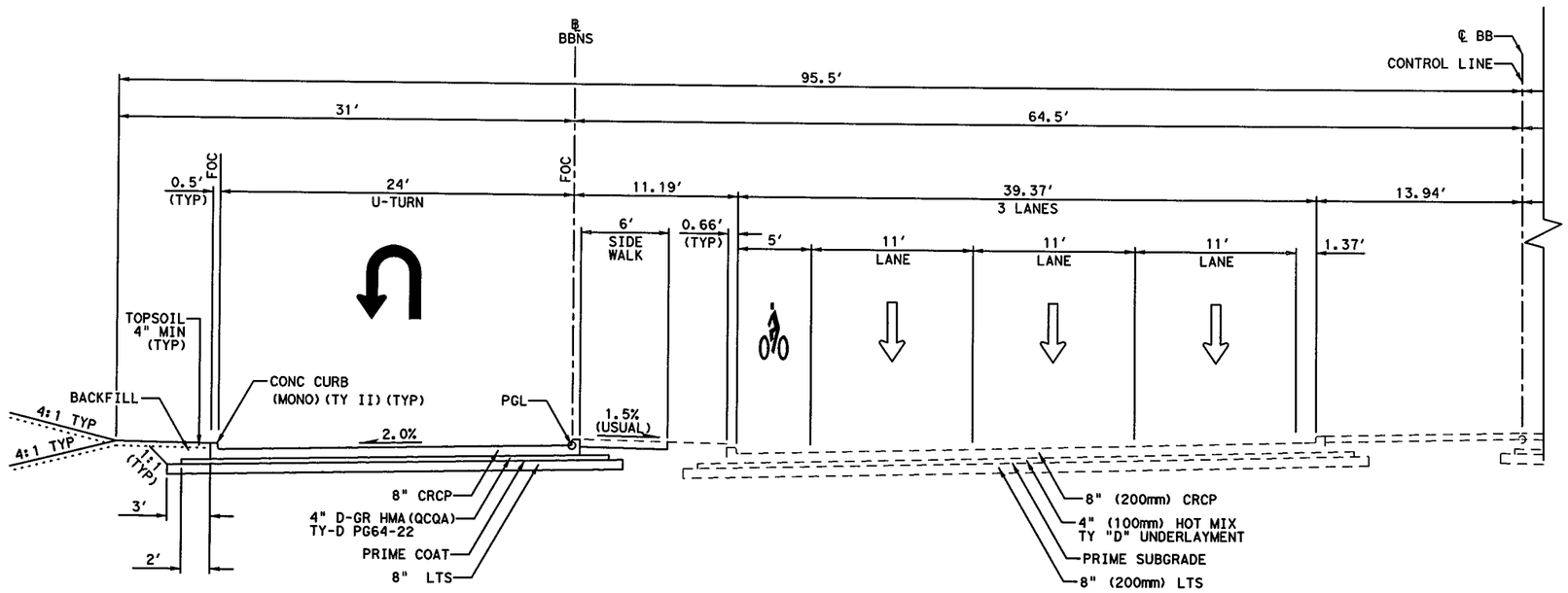

PROPOSED CROSS STREET TYPICAL SECTION

℄ BB STA 22+04.04 TO STA 23+43.14

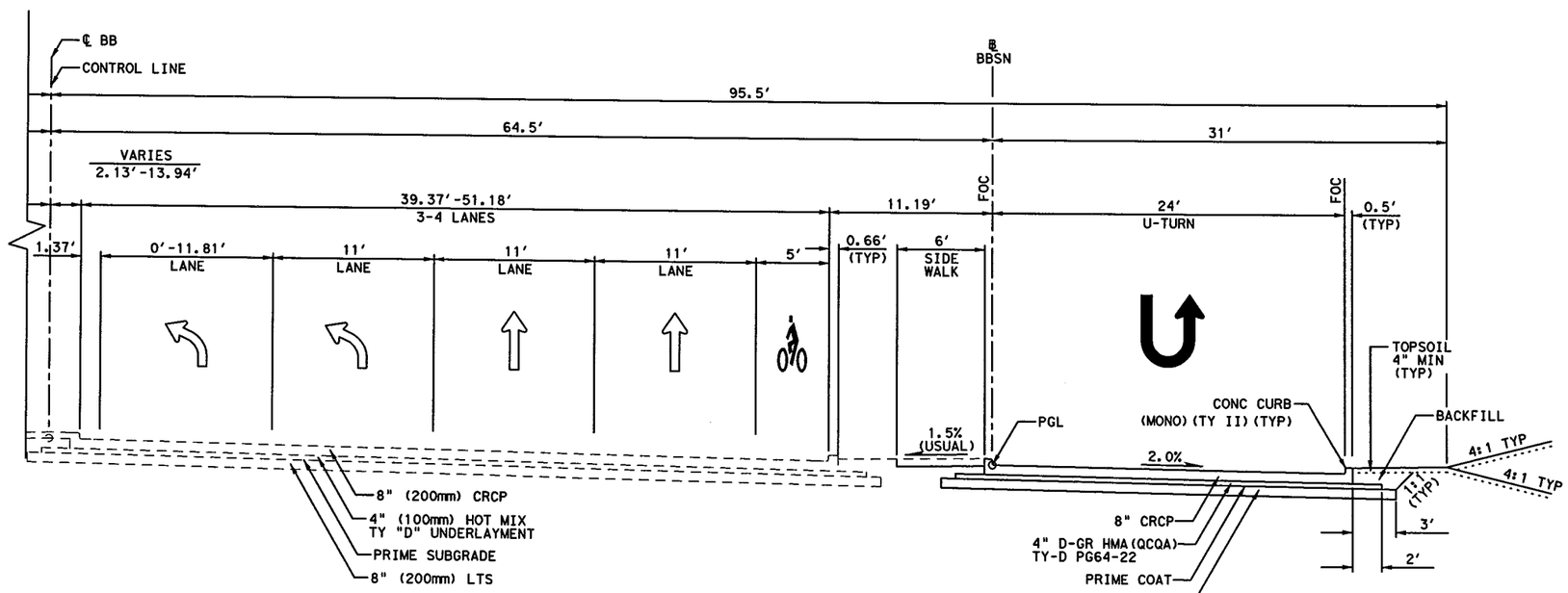

PROPOSED CROSS STREET TYPICAL SECTION

℄ BB STA 22+04.04 TO STA 23+43.14

0' 5' 10'

SCALE IN FEET

NOTES:

1. STATION LIMITS SHOWN ARE APPROXIMATE AND FOR NORMAL ROADWAY CONDITIONS. FOR WIDENINGS AND TRANSITIONS, SEE VARIOUS PLAN AND PROFILE SHEETS.
2. NORMAL CROSS SLOPES ARE TYPICALLY DISPLAYED. REFER TO ROADWAY PLAN & PROFILE SHEETS AND SUPERELEVATION DATA SHEET FOR ADDITIONAL INFORMATION.

STATE OF TEXAS
SYED S. HAQ
94660
LICENSED
PROFESSIONAL ENGINEER

Syed Sajidul Haq
07/13/12

KENNEDY CONSULTING
TBPE REGISTRATION NO. F-926

Texas Department of Transportation
© 2012

IH 35W FROM NORTH TARRANT PKWY TO IH 820

TYPICAL SECTIONS
CROSS STREETS

SCALE 1" = 10' SHEET 3 OF 4

DESIGN	FED. RD. DIV. NO.	FEDERAL AID PROJECT NO.		HIGHWAY NO.
KCI	6	(SEE TITLE SHEET)		IH 35W
GRAPHICS	STATE	DISTRICT	COUNTY	SHEET NO.
KCI	TEXAS	FTW	TARRANT	52
CHECK	CONTROL	SECTION	JOB	
KCI	0014	16	255, ETC.	

CHECK KCI

FILENAME: S3BTYP28B.dgn

DRAWING DATE: 7/13/2012

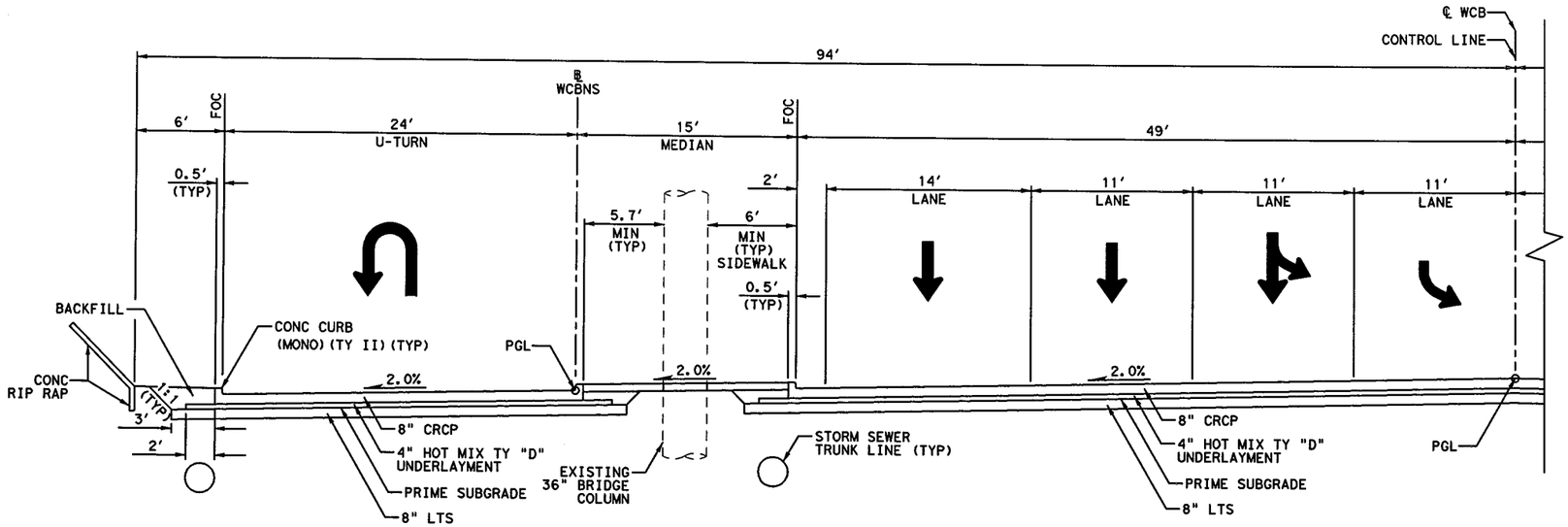

PROPOSED INTERIM CROSS STREET TYPICAL SECTION

℄ WCB STA 14+06.63 TO STA 17+04.76

NOTES:

1. STATION LIMITS SHOWN ARE APPROXIMATE AND FOR NORMAL ROADWAY CONDITIONS. FOR WIDENINGS AND TRANSITIONS, SEE VARIOUS PLAN AND PROFILE SHEETS.
2. NORMAL CROSS SLOPES ARE TYPICALLY DISPLAYED. REFER TO ROADWAY PLAN & PROFILE SHEETS AND SUPERELEVATION DATA SHEET FOR ADDITIONAL INFORMATION.

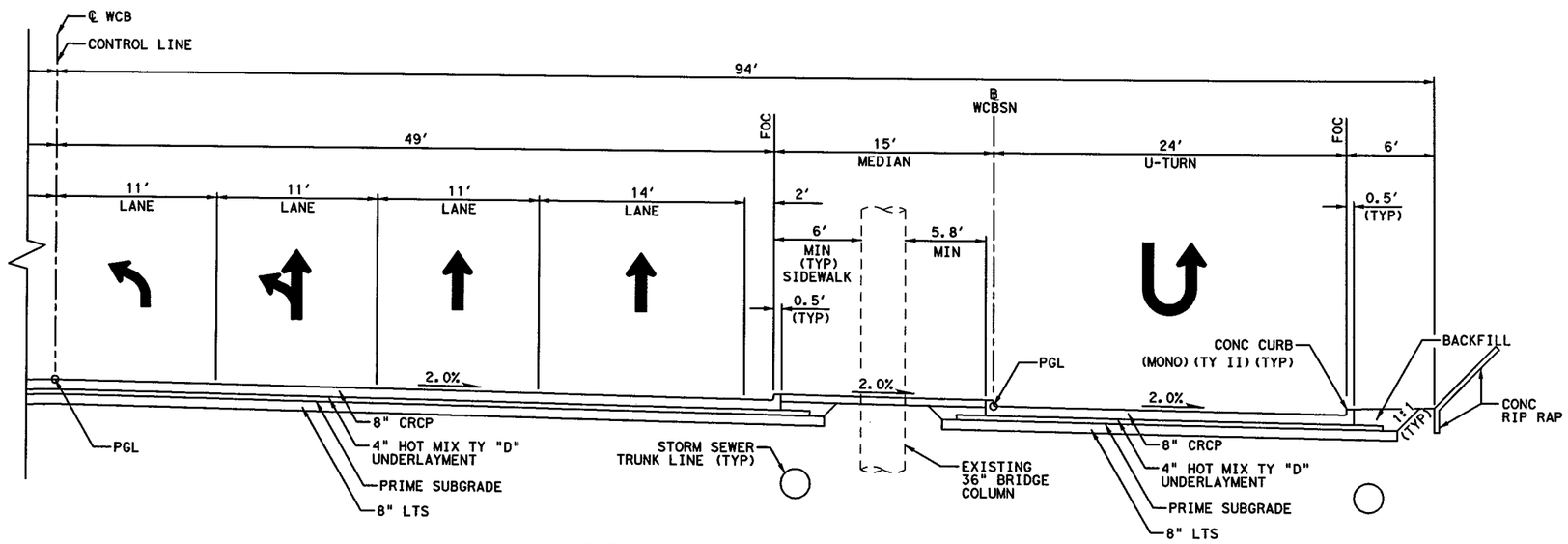

PROPOSED INTERIM CROSS STREET TYPICAL SECTION

℄ WCB STA 14+06.63 TO STA 17+04.76

STATE OF TEXAS
SYED S. HAQ
94660
LICENSED
PROFESSIONAL ENGINEER

Syed Sajidul Haq
07/13/12

KENNEDY CONSULTING
TBPE REGISTRATION NO. F-926

Texas Department of Transportation
© 2012

IH 35W FROM NORTH TARRANT PKWY TO IH 820

TYPICAL SECTIONS
CROSS STREETS

SCALE 1" = 10'

SHEET 4 OF 4

DESIGN	FED. RD. DIV. NO.	FEDERAL AID PROJECT NO.		HIGHWAY NO.
KCI	6	(SEE TITLE SHEET)		IH 35W
GRAPHICS KCI	STATE	DISTRICT	COUNTY	SHEET NO.
CHECK KCI	TEXAS	FTW	TARRANT	53
CHECK KCI	CONTROL	SECTION	JOB	
	0014	16	255, ETC.	

FILENAME: S3BTYP29.dgn

DRAWING DATE: 7/13/2012

0′ 5′ 10′

SCALE IN FEET

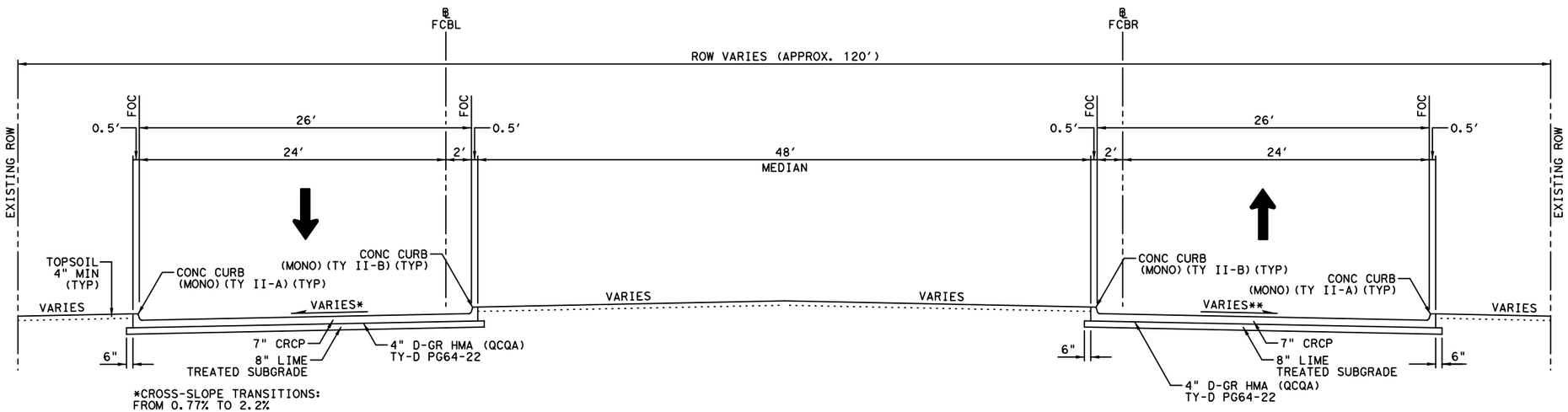

*CROSS-SLOPE TRANSITIONS:
FROM 0.77% TO 2.2%

**CROSS-SLOPE TRANSITIONS:
FROM 0.53% TO 1.5%

PROPOSED CROSS STREET TYPICAL SECTION

FOSSIL CREEK BLVD
℄ FCBL STA 10+00.00 TO STA 11+53.39
℄ FCBR STA 20+00.00 TO STA 21+55.43

NOTES:

1. STATION LIMITS SHOWN ARE APPROXIMATE AND FOR NORMAL ROADWAY CONDITIONS. FOR WIDENINGS AND TRANSITIONS, SEE VARIOUS PLAN AND PROFILE SHEETS.
2. NORMAL CROSS SLOPES ARE TYPICALLY DISPLAYED. REFER TO ROADWAY PLAN & PROFILE SHEETS AND SUPERELEVATION DATA SHEET FOR ADDITIONAL INFORMATION.

STATE OF TEXAS
SYED S. HAQ
94660
LICENSED
PROFESSIONAL ENGINEER

Syed S. Haq
08/22/2012

KENNEDY CONSULTING
TBPE REGISTRATION NO. F-926

Texas Department of Transportation
© 2012

IH 35W FROM NORTH TARRANT PKWY TO IH 820

TYPICAL SECTIONS
INTERSECTING STREETS

SCALE 1" = 10′ SHEET 1 OF 1

DESIGN KCI	FED.RD. DIV.NO. 6	FEDERAL AID PROJECT NO. (SEE TITLE SHEET)		HIGHWAY NO. IH 35W
GRAPHICS KCI	STATE	DISTRICT	COUNTY	SHEET NO.
CHECK KCI	TEXAS	FTW	TARRANT	54
CHECK KCI	CONTROL 0014	SECTION 16	JOB 255, ETC.	

FILENAME: S3BTYP30.dgn
DRAWING DATE: 8/22/2012

MAINLANES

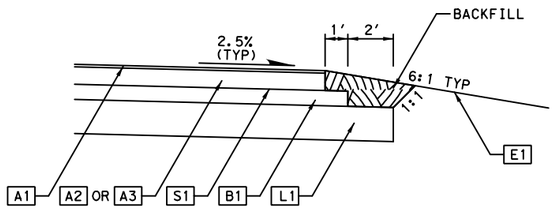

DETAIL A
NTS

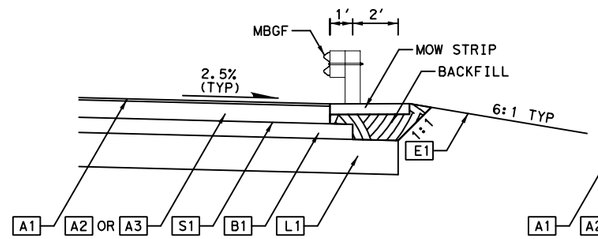

DETAIL B
NTS

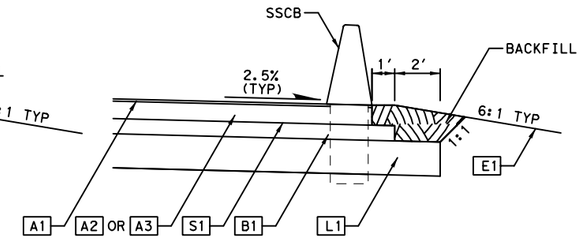

DETAIL C
NTS

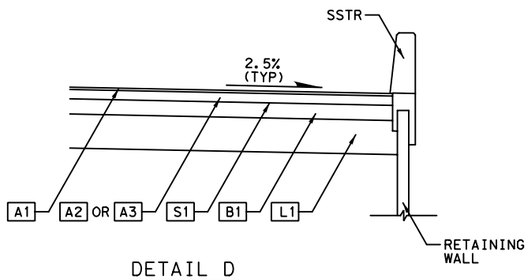

DETAIL D
NTS

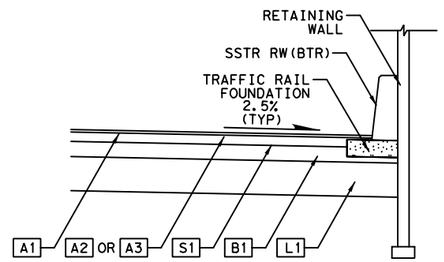

DETAIL E
NTS

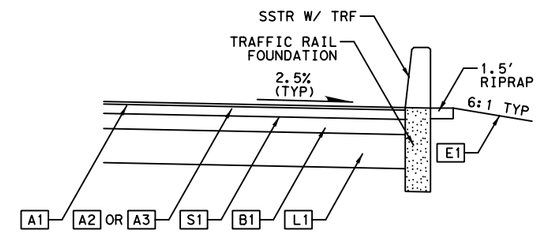

DETAIL F
NTS

FRONTAGE ROADS

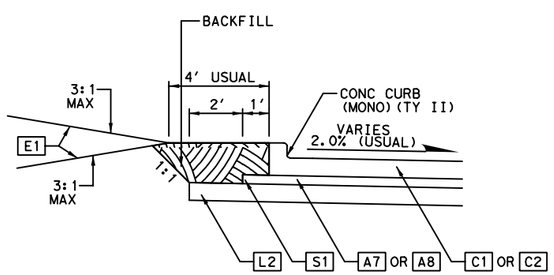

DETAIL G
NTS

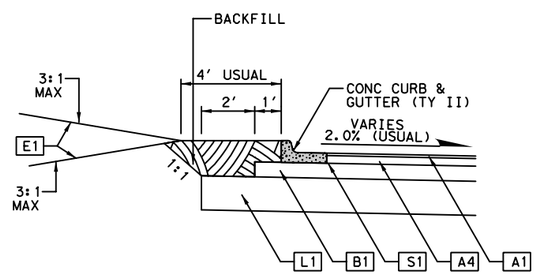

DETAIL H
NTS

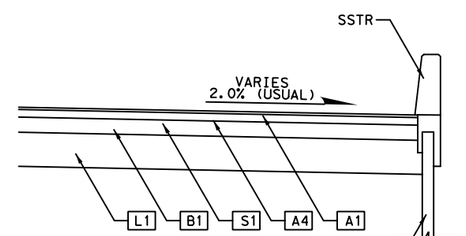

DETAIL I
NTS

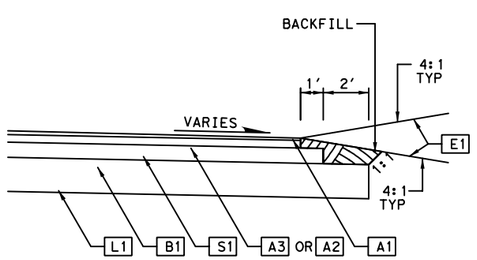

DETAIL J
NTS

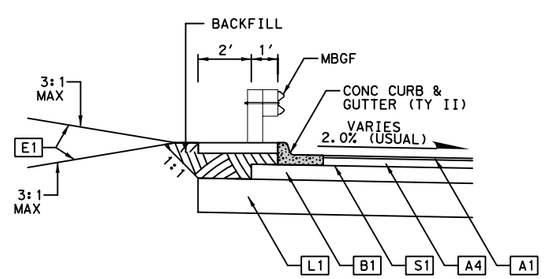

DETAIL K
NTS

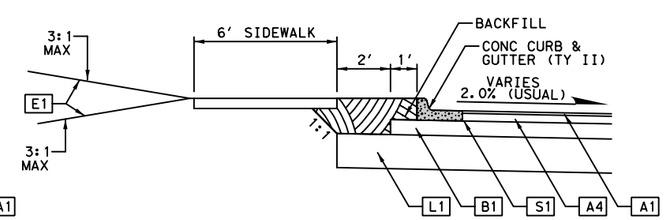

DETAIL L
NTS

LEGEND:

- A1 1.25" STONE MTRX-ASPH SMA-F SAC-B PG76-22
- A2 9" D-GR HMA(QCQA) TY-B PG64-22
- A3 10.5" D-GR HMA(QCQA) TY-B PG64-22
- A4 5" D-GR HMA(QCQA) TY-B PG64-22
- A5 6" D-GR HMA(QCQA) TY-B PG64-22
- A6 8" D-GR HMA(QCQA) TY-B PG64-22
- A7 4" D-GR HMA(QCQA) TY-D PG64-22
- C1 8" CONC PVMT (CONT REINF-CRCP)
- C2 7" CONC PVMT (CONT REINF-CRCP)
- S1 PRIME COAT(EC-30)
- B1 FL BS (CMP IN PLC) (TY D GR 4)(FNAL POS)(8")
- B2 FL BS (CMP IN PLC) (TY D GR 4)(FNAL POS)(4")
- L1 LIME TREATED SUBGRADE (18"-36")(SEE SHEET 55C FOR STATION RANGES & DEPTHS)
- L2 LIME TREATMENT SUBGRADE (8")
- E1 FURNISHING AND PLACING TOPSOIL (4")

NOTES:

1. TY C EMBANKMENT WILL BE USED FOR PAVEMENT EDGE BACKFILL.
2. SEE SHEET 55B FOR LIME TREATMENT EXTENSION DETAILS.

STATE OF TEXAS
SYED S. HAQ
94660
LICENSED
PROFESSIONAL ENGINEER
08/22/2012

KENNEDY CONSULTING
TBPE REGISTRATION NO. F-926

Texas Department of Transportation
© 2012

IH 35W FROM NORTH TARRANT PKWY TO IH 820

TYPICAL SECTIONS
MISCELLANEOUS DETAILS

SHEET 1 OF 3

DESIGN	FED. RD. DIV. NO.	FEDERAL AID PROJECT NO.		HIGHWAY NO.
KCI	6	(SEE TITLE SHEET)		IH 35W
GRAPHICS KCI	STATE	DISTRICT	COUNTY	SHEET NO.
CHECK KCI	TEXAS	FTW	TARRANT	55
CHECK	CONTROL	SECTION	JOB	
KCI	0014	16	255, ETC.	

FILENAME: S3B*TYP*DET01.dgn
DRAWING DATE: 8/22/2012

RAMPS & DIRECT CONNECTORS

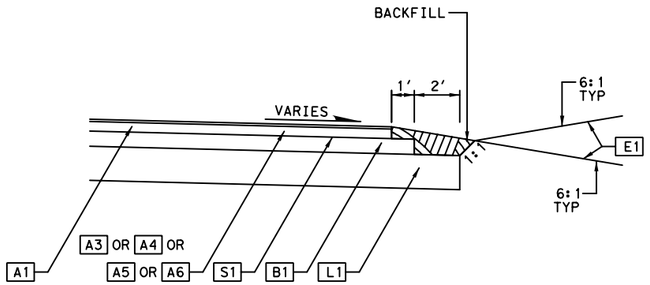

DETAIL M
NTS

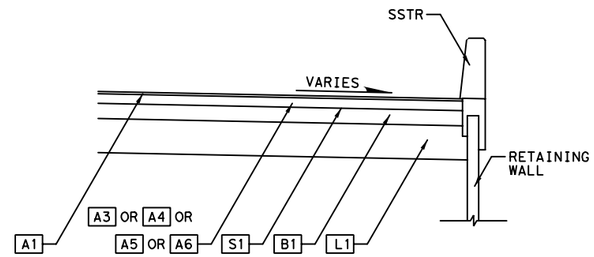

DETAIL N
NTS

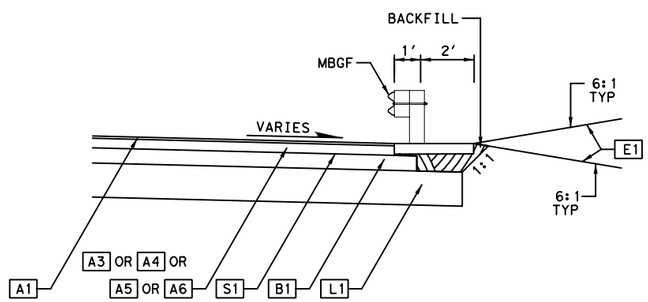

DETAIL O
NTS

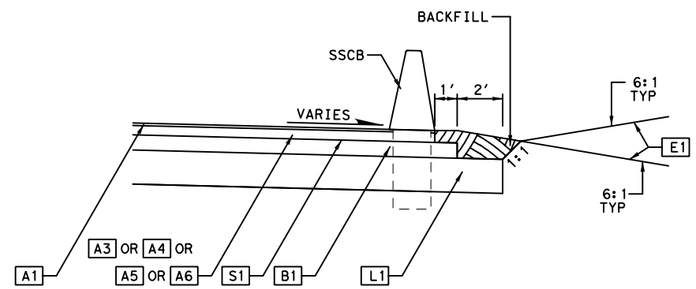

DETAIL P
NTS

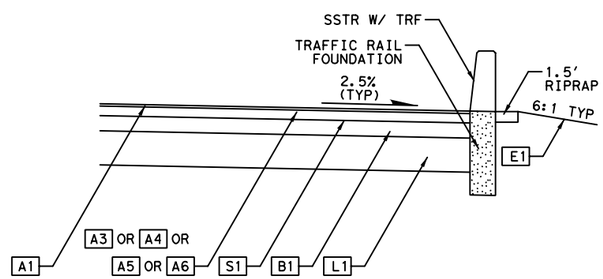

DETAIL Q
NTS

LEGEND:

- A1 1.25" STONE MTRX-ASPH SMA-F SAC-B PG76-22
- A2 9" D-GR HMA(QCQA) TY-B PG64-22
- A3 10.5" D-GR HMA(QCQA) TY-B PG64-22
- A4 5" D-GR HMA(QCQA) TY-B PG64-22
- A5 6" D-GR HMA(QCQA) TY-B PG64-22
- A6 8" D-GR HMA(QCQA) TY-B PG64-22
- A7 4" D-GR HMA(QCQA) TY-D PG64-22
- C1 8" CONC PVMT (CONT REINF-CRCP)
- C2 7" CONC PVMT (CONT REINF-CRCP)
- S1 PRIME COAT(EC-30)
- B1 FL BS (CMP IN PLC) (TY D GR 4)(FNAL POS)(8")
- B2 FL BS (CMP IN PLC) (TY D GR 4)(FNAL POS)(4")
- L1 LIME TREATED SUBGRADE (18"-36")(SEE SHEET 55C FOR STATION RANGES & DEPTHS)
- L2 LIME TREATMENT SUBGRADE (8")
- E1 FURNISHING AND PLACING TOPSOIL (4")

NOTES:

1. TY C EMBANKMENT WILL BE USED FOR PAVEMENT EDGE BACKFILL.
2. SEE SHEET 55B FOR LIME TREATMENT EXTENSION DETAILS.

STATE OF TEXAS
SYED S. HAQ
94660
LICENSED
PROFESSIONAL ENGINEER

Syed S. Haq
08/22/2012

KENNEDY CONSULTING
TBPE REGISTRATION NO. F-926

Texas Department of Transportation
© 2012

IH 35W FROM NORTH TARRANT PKWY TO IH 820

TYPICAL SECTIONS
MISCELLANEOUS DETAILS

SHEET 2 OF 3

DESIGN	FED.RD. DIV.NO.	FEDERAL AID PROJECT NO.		HIGHWAY NO.
KCI	6	(SEE TITLE SHEET)		IH 35W
GRAPHICS	STATE	DISTRICT	COUNTY	SHEET NO.
KCI	TEXAS	FTW	TARRANT	55A
CHECK	CONTROL	SECTION	JOB	
KCI	0014	16	255, ETC.	

CHECK
KCI

DRAWING DATE: 8/22/2012 FILENAME: S3B*TYP*DET01.dgn

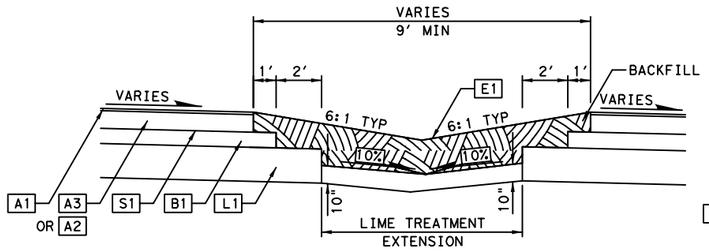

LIME TREATMENT EXTENSION DETAIL
FOR WIDE MEDIAN WITH DITCH
NTS

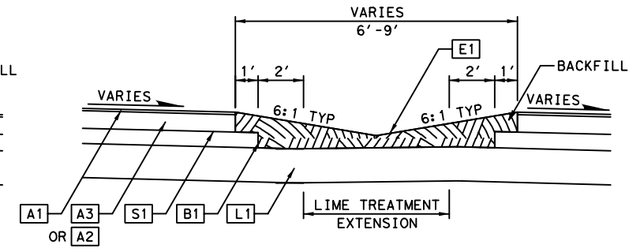

LIME TREATMENT EXTENSION DETAIL
FOR NARROW MEDIAN WITHOUT PVR TREATMENT
NTS

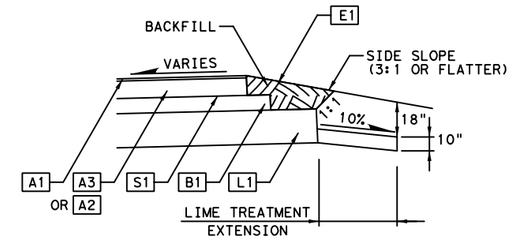

LIME TREATMENT EXTENSION DETAIL
FOR EMBANKMENT
NTS

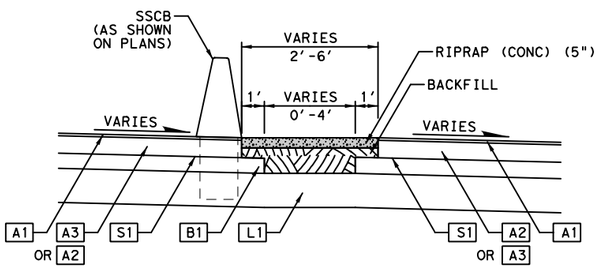

LIME TREATMENT EXTENSION DETAIL
FOR NARROW MEDIAN WITH RIPRAP
NTS

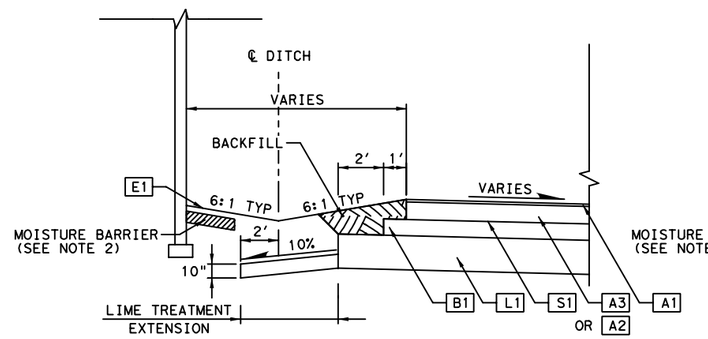

LIME TREATMENT EXTENSION DETAIL
FOR BASE OF WALL WITH OFFSET AND DITCH
NTS

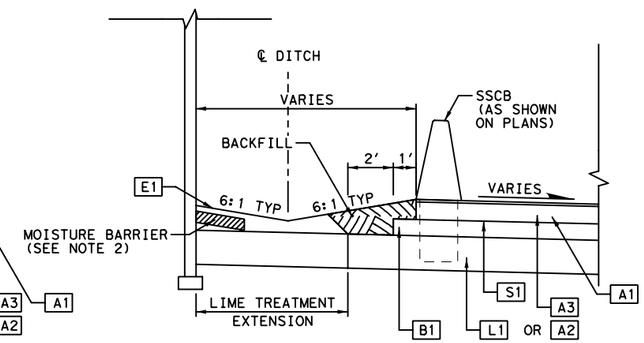

LIME TREATMENT EXTENSION DETAIL
FOR BASE OF WALL WITHIN CLEAR ZONE
NTS

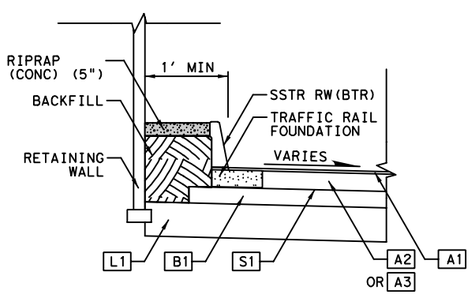

LIME TREATMENT EXTENSION DETAIL
FOR BASE OF WALL WITH BARRIER FILL
NTS

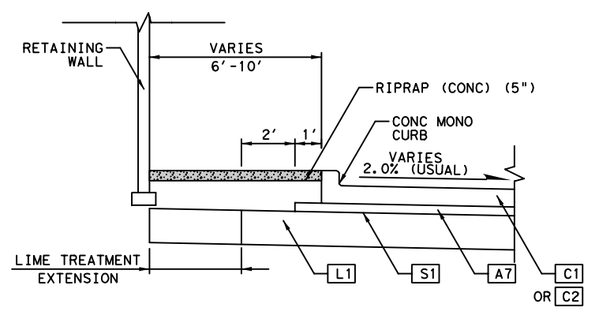

LIME TREATMENT EXTENSION DETAIL
FOR BASE OF WALL WITH NARROW OFFSET
NTS

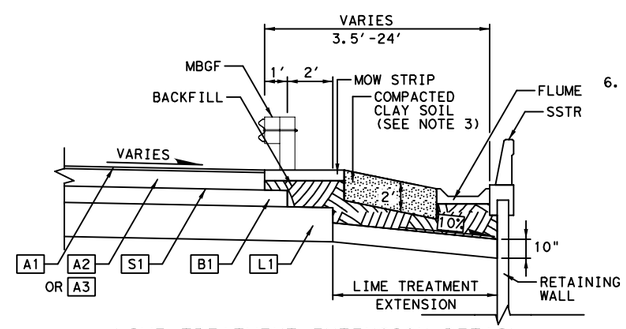

LIME TREATMENT EXTENSION DETAIL
FOR TOP OF WALL WITH COMPACTED CLAY SOIL
NTS

LEGEND:

- A1 1.25" STONE MTRX-ASPH SMA-F SAC-B PG76-22
- A2 9" D-GR HMA(QCQA) TY-B PG64-22
- A3 10.5" D-GR HMA(QCQA) TY-B PG64-22
- A4 5" D-GR HMA(QCQA) TY-B PG64-22
- A5 6" D-GR HMA(QCQA) TY-B PG64-22
- A6 8" D-GR HMA(QCQA) TY-B PG64-22
- A7 4" D-GR HMA(QCQA) TY-D PG64-22
- C1 8" CONC PVMT (CONT REINF-CRCP)
- C2 7" CONC PVMT (CONT REINF-CRCP)
- S1 PRIME COAT(EC-30)
- B1 FL BS (CMP IN PLC) (TY D GR 4)(FNAL POS)(8")
- B2 FL BS (CMP IN PLC) (TY D GR 4)(FNAL POS)(4")
- L1 LIME TREATED SUBGRADE (18"-36")(SEE SHEET 55C FOR STATION RANGES AND DEPTHS)
- E1 FURNISHING AND PLACING TOPSOIL (4")

NOTES:

1. TY C EMBANKMENT WILL BE USED FOR PAVEMENT EDGE BACKFILL.
2. MOISTURE BARRIER (TY C2 EMBANKMENT) SHALL BE 8" SELECT FILL (CLAYEY SAND) HAVING PI OF 5 TO 14, COMPACTED AT -2% TO +2% OF OPTIMUM TO 98% TEX 114-E. TY C2 EMBANKMENT SHALL BE SUBSIDARY TO RETAINING WALLS.
3. WHERE PAVEMENT IS NOT LOCATED BEHIND THE WALL, THE UPPER TWO FEET MUST CONSIST OF COMPACTED CLAY SOIL (TY C4 EMBANKMENT) WITH A PI INDEX GREATER THAN 25. TY C4 EMBANKMENT WILL NOT BE PAID FOR DIRECTLY, BUT CONSIDERED SUBSIDIARY TO RETAINING WALLS.
4. LIME TREATED SUBGRADE LAYER SHALL BE EXTENDED 3 FEET BEYOND THE EDGE OF WEARING COURSE OR 3 FEET BEYOND THE BACK OF THE CURB. BEYOND THIS 3 FEET EXTENSION, LIME TREATED SUBGRADE LAYER SHALL BE EXTENDED WITH A MINIMUM THICKNESS OF 10 INCHES AND A 10% GRADIENT UP TO THE FOLLOWING LIMITS PROVIDING THAT A MINIMUM OF 18" OF UNTREATED SOIL IS PLACED ABOVE THE LIME TREATED SUBGRADE LAYER:
   i) EMBANKMENT: THE LAYER SHALL BE EXTENDED OUT TO THE EMBANKMENT SLOPE.
   ii) CUT: THE LAYER SHALL BE EXTENDED 2 FEET BEYOND THE DRAINAGE DITCH BOTTOM OR VERTEX.
5. IN AREAS WHERE THE DISTANCE BETWEEN THE FULL DEPTH LIME TREATED SUBGRADE OF TWO ROADWAYS IS LESS THAN OR EQUAL TO 3 FEET, THE AREA SHALL BE TREATED EXTENDING THE LIME TREATED SUBGRADE MAINTAINING THE THICKNESS AND LIME PERCENTAGE.
6. FOR AREAS WITH RETAINING WALLS DESIGNED WITHIN THE CLEAR ZONE LIMITS, THE LIME TREATED SUBGRADE TREATMENT SHALL BE EXTENDED OUT TO THE RETAINING WALL.

STATE OF TEXAS
SYED S. HAQ
94660
LICENSED
PROFESSIONAL ENGINEER
Syed S. Haq
08/22/2012

KENNEDY CONSULTING

Texas Department of Transportation
© 2012

IH 35W FROM NORTH TARRANT PKWY TO IH 820

TYPICAL SECTIONS
MISCELLANEOUS DETAILS

SHEET 3 OF 3

DESIGN	FED. RD. DIV. NO.	FEDERAL AID PROJECT NO.		HIGHWAY NO.
KCI	6	(SEE TITLE SHEET)		IH 35W
GRAPHICS KCI	STATE	DISTRICT	COUNTY	SHEET NO.
CHECK KCI	TEXAS	FTW	TARRANT	55B
CHECK KCI	CONTROL	SECTION	JOB	
	0014	16	255, ETC.	

FILENAME: S3B*TYP*DET02.dgn
DRAWING DATE: 8/22/2012

LOCATION / STATION	LIME TRT (EXIST MATL)	LIME TRT (EXIST MATL) (PVR TREATMENT) "X"	TOTAL LIME TRT (EXIST MATL) L1	NON-SWELLING SOIL SELECT FILL (TY C1 EMBANKMENT) (PVR TREATMENT) "Y"
	DEPTH (IN)	DEPTH (IN)	DEPTH(IN)	DEPTH (FT)
MANAGED LANES				
1401+00 TO 1426+00	18	0	18	5.5
1426+00 TO 1451+00	18	6	24	0
1451+00 TO 1471+00	18	6	24	0
1471+00 TO 1474+00	18	18	36	0
1474+00 TO 1476+00	18	0	18	2
1476+00 TO 1483+00	18	18	36	0
1483+00 TO 1494+00	18	0	18	4.5
1494+00 TO 1502+00	18	0	18	3.5
1502+00 TO 1523+00	18	18	36	0
1523+00 TO 1532+00	18	0	18	3.5
1532+00 TO 1548+00	18	0	18	5.5
1548+00 TO 1560+00	18	18	36	0
1560+00 TO 1576+00	18	0	18	0
1576+00 TO 1590+00	18	18	36	0
GENERAL PURPOSE LANES				
NB GP LANES & TRANSITIONS				
4401+00 TO 4425+98	18	0	18	5.5
4425+98 TO 4431+32	18	6	24	0
1430+94 TO 1450+64	18	6	24	0
1450+64 TO 1470+65	18	6	24	0
1470+65 TO 1473+65	18	18	36	0
1473+65 TO 1475+65	18	0	18	2
1475+65 TO 1482+64	18	18	36	0
1482+64 TO 1493+59	18	0	18	4.5
1493+59 TO 1501+56	18	0	18	3.5
1501+56 TO 1522+57	18	18	36	0
1522+57 TO 1531+57	18	0	18	3.5
1531+57 TO 1547+57	18	0	18	5.5
1547+57 TO 1559+57	18	18	36	0
1559+57 TO 1575+66	18	0	18	0
1575+66 TO 1589+68	18	18	36	0
4590+00 TO 4609+04	18	18	36	0
SB GP LANES & TRANSITIONS				
3401+00 TO 3414+37	18	0	18	5.5
1414+77 TO 1426+41	18	0	18	5.5
1426+41 TO 1451+42	18	6	24	0
1451+42 TO 1471+43	18	6	24	0
1471+43 TO 1474+43	18	18	36	0
1474+43 TO 1476+43	18	0	18	2
1476+43 TO 1483+44	18	18	36	0
1483+44 TO 1494.49	18	0	18	4.5
1494+49 TO 1502+52	18	0	18	3.5
1502+52 TO 1523+52	18	18	36	0
1523+52 TO 1532+52	18	0	18	3.5
1532+52 TO 1548+52	18	0	18	5.5
1548+52 TO 1560+52	18	18	36	0
1560+52 TO 1576+43	18	0	18	0
1576+43 TO 1590+42	18	18	36	0
FRONTAGE ROADS				
NB FRONTAGE RD				
1472+00 TO 1477+00	18	0	18	2
1477+00 TO 1491+40	18	6	24	0
1531+89 TO 1534+54	18	6	24	0
1536+64 TO 1540+12	18	6	24	0
1542+60 TO 1575+00	18	0	18	0
1575+00 TO 1591+16	18	18	36	0
3591+16 TO 3597+46	18	18	36	0
SB FRONTAGE RD			0	
30+59 TO 80+00	18	0	18	0
80+00 TO 87+00	18	18	36	0
3126+53 TO 130+56	18	0	18	4.5
132+67 TO 135+90	18	0	18	5
139+11 TO 149+00	18	0	18	5.5
149+00 TO 152+11	18	18	36	0

LOCATION / STATION	LIME TRT (EXIST MATL)	LIME TRT (EXIST MATL) (PVR TREATMENT) "X"	TOTAL LIME TRT (EXIST MATL) L1	NON-SWELLING SOIL SELECT FILL (TY C1 EMBANKMENT) (PVR TREATMENT) "Y"
	DEPTH (IN)	DEPTH (IN)	DEPTH(IN)	DEPTH (FT)
NB RAMPS				
35N-NTP13+75 TO 23+29	18	0	18	4.5
BB-35N15+57 TO 26+94	18	0	18	0
BB-287W13+05 TO 20+20	18	0	18	0
WCB-35N15+93 TO 22+25	18	0	18	0
MLN-BB16+71 TO 18+94	18	0	18	0
18+94 TO 39+11	18	*	18	*
39+11 TO 40+00	18	6	24	0
35N-BB21+08 TO 28+79	18	*	18	*
31+22 TO 33+42	18	6	24	0
35N-WCB13+73 TO 23+61	18	0	18	0
SB RAMPS				
NTP-35S13+38 TO 19+10	18	0	18	3.5
BB-MLS11+30 TO 19+61	18	18	36	0
19+61 TO 21+80	18	0	18	0
21+80 TO 23+84	18	*	18	*
34+39 TO 38+82	18	*	18	*
38+82 TO 40+47	18	0	18	0
35S-WCB12+47 TO 15+50	18	0	18	0
17+98 TO 19+75	18	0	18	4.5
WCB-35S14+33 TO 21+04	18	18	36	0
BB-35S18+75 TO 23+79	18	*	18	*
23+79 TO 24+85	18	0	18	4.5
27+04 TO 30+27	18	0	18	5
DIRECT CONNECTORS				
35N-287W38+07 TO 49+07	18	0	18	0
56+32 TO 72+75	18	0	18	0
72+75 TO 87+24	18	0	18	0
35S-287W15+28 TO 28+56	18	6	24	0
287E-MLS44+32 TO 50+50	18	0	18	0
59+65 TO 64+65	18	*	18	*
64+65 TO 70+92	18	0	18	0
MLN-287W61+57 TO 67+11	18	*	18	*
67+11 TO 69+40	18	6	24	0
35S-820W17+88 TO 19+79	18	18	36	0

* MSE WALL LOCATION

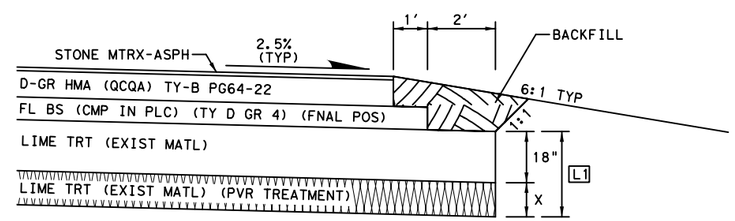

OR

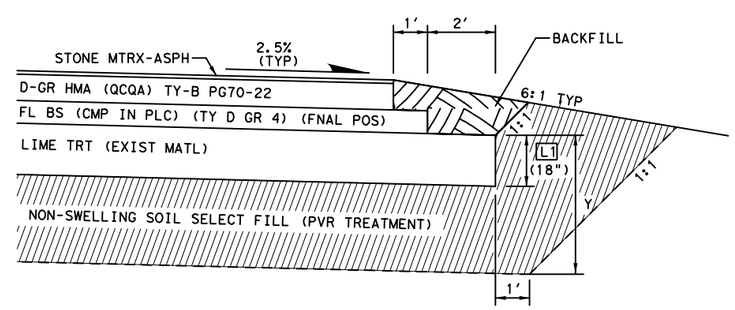

NOTES:

1. TYPES AND THICKNESS OF MATERIAL SHOWN ARE BASED ON TXDOT'S PAVEMENT DESIGN REPORT DATED _____.
2. PVR = POTENTIAL VERTICAL RISE.
3. PROVIDE NON-SWELLING SELECT FILL MATERIAL (TY C1 EMBANKMENT) PER STATION RANGE AND DEPTH AS SHOWN IN THE TABLE. THE DEPTH IS MEASURED FROM THE BOTTOM OF FLEXIBLE BASE. SELECT FILL MATERIAL SHOULD CONSIST OF CLAYEY SAND OR VERY SANDY CLAY (UNIFORM CONSISTENCY FREE OF CLAY CLODS) HAVING A PI OF 10 TO 18. IT SHOULD BE COMPACTED IN 8" LIFTS TO 95% TEX 113E AT -2% TO +2% OF OPTIMUM MOISTURE CONTENT.
4. TY C EMBANKMENT WILL BE USED FOR PAVEMENT EDGE BACKFILL.

STATE OF TEXAS
SYED S. HAQ
94660
LICENSED
PROFESSIONAL ENGINEER
08/22/2012

KENNEDY CONSULTING
TBPE REGISTRATION NO. F-926

Texas Department of Transportation
© 2012

IH 35W FROM NORTH TARRANT PKWY TO IH 820

TYPICAL SECTIONS
PAVEMENT SUBGRADE TABLE

SCALE: NTS

DESIGN	FED. RD. DIV. NO.	FEDERAL AID PROJECT NO.		HIGHWAY NO.
KCI	6	(SEE TITLE SHEET)		IH 35W
GRAPHICS KCI	STATE	DISTRICT	COUNTY	SHEET NO.
CHECK KCI	TEXAS	FTW	TARRANT	55C
CHECK KCI	CONTROL	SECTION	JOB	
	0014	16	255, ETC.	

FILENAME: S3BTYP*SUB01.dgn

DRAWING DATE: 8/22/2012

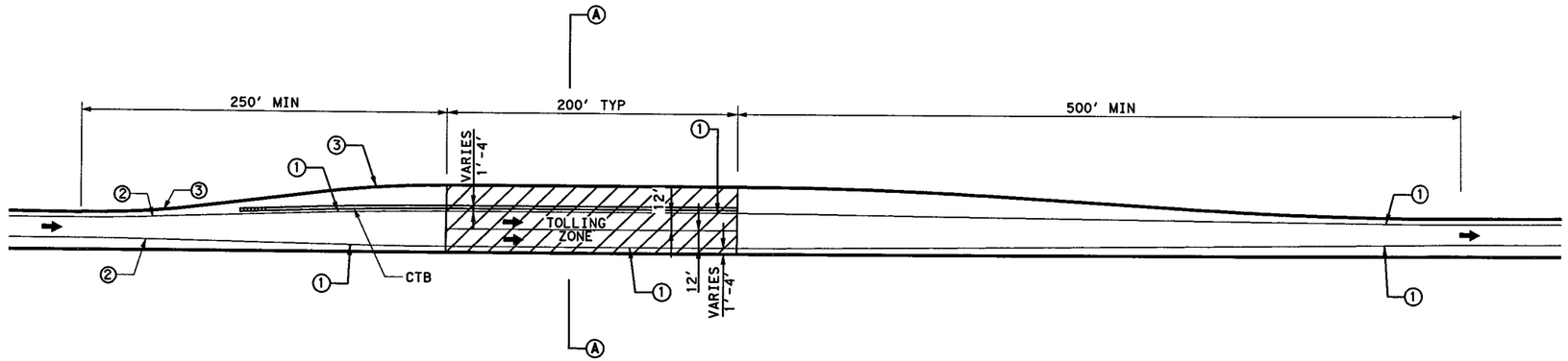

CURVE NO.	DEGREE OF CURVE	DEFLECTION ANGLE	RADIUS*
1	2	5 DEG. MAX	2864.788976
2	4	5 DEG.	1432.394488
3	8	VARIES	716.1972439

* UNLESS OTHERWISE SHOWN IN PLANS.

TOLLING ZONE GEOMETRY

N.T.S.

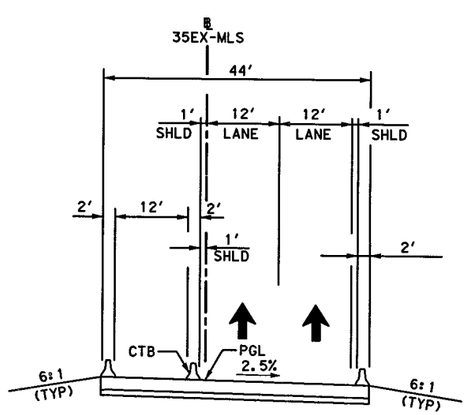

SECTION A-A

N.T.S.

℄ 35EX-MLS STA 5419+50.00 TO 5420+50.00

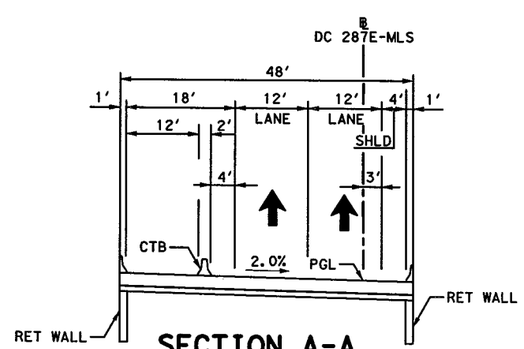

SECTION A-A

N.T.S.

℄ 287E-MLS STA 60+00.00 TO 61+00.00

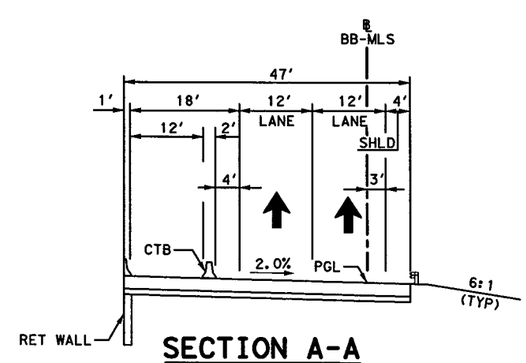

SECTION A-A

N.T.S.

℄ BB-MLS STA 19+00.00 TO 20+00.00

STATE OF TEXAS
SYED S. HAQ
94660
LICENSED
PROFESSIONAL ENGINEER

Syed Sajid Haq
07/13/12

KENNEDY CONSULTING
TBPE REGISTRATION NO. F-926

Texas Department of Transportation
© 2012

IH 35W FROM NORTH TARRANT PKWY TO IH 820

TYPICAL SECTIONS
TOLLING ZONE

SCALE: N.T.S. SHEET 1 OF 1

DESIGN	FED. RD. DIV. NO.	FEDERAL AID PROJECT NO.		HIGHWAY NO.
KCI	6	(SEE TITLE SHEET)		IH 35W
GRAPHICS KCI	STATE	DISTRICT	COUNTY	SHEET NO.
CHECK KCI	TEXAS	FTW	TARRANT	56
CHECK KCI	CONTROL 0014	SECTION 16	JOB 255, ETC.	

FILENAME: S3B*TYP*DET.dgn

DRAWING DATE: 7/13/2012

Project Number: IM 0355 (151) **Sheet**

County: Tarrant **Control:** 0014-16-255

Highway: IH 35W

**** Specification Data ****

Table 1: Soil Constants Requirement. See general note for Item 132 and 423 for more detail.

Item	Description	Plasticity Index		Note
		Max	Min	
132	EMBANKMENT(FINAL)(DENS CONST)(TY C)	25	10	
132	EMBANKMENT(FINAL)(DENS CONST)(TY C1)	18	10	Clayey sand or very sandy clay
423	EMBANKMENT(FINAL)(DENS CONST)(TY C2)	14	5	Clayey sand compacted at -2% to +2% of optimum to 98% TEX 114-E
423	EMBANKMENT(FINAL)(DENS CONST)(TY C3)	25	10	
423	EMBANKMENT(FINAL)(DENS CONST)(TY C4)	>25		Compacted clay soil

Basis of Estimate
****

Item	Description	Rate	Unit
166	Fert (16-8-8)	600 lb/acre**	Ton
168	Vegetative Watering	169,400 gal/acre	MG
210	Roll (Med Pneum Tire)(TY B)Surf Treat	1 Hr/2000 SY/crse**	Hr
216	Roll (Proof) 18" Lime Treat. Subgr.	1 Hr/10000 SY/crse**	Hr
216	Roll (Proof) 36" Lime Treat. Subgr.	1 Hr/10000 SY/crse**	Hr
260	Lime (Hydrated, Commercial Or Quicklime)(Slry)	36 to 48 lb/SY/8 in	Ton
275	Cement (Subgr.)(PI<20)	125 lb/CY	Ton
310	Asph Mat'l (EC-30) (Flex Base)	0.3 gal/SY*	Gal
3224	Hot Mix (All Types)	115 lb/SY/in	Ton
346	Stone-Matrix Asphalt	115 lbs/SY/in	Ton

* Based on at least 10% residual of asphalt liquid.
** Non-Pay, for Contractor's Information Only.

Replaced 9.4.12

Project Number: IM 0355 (151) **Sheet** 57

County: Tarrant **Control:** 0014-16-255

Highway: IH 35W

Compaction Requirements for Base Courses:
****

(Percent Of Density As Determined By Compaction Ratio Test TEX-113-E)

ITEM	MATERIAL	COURSE	MIN DENSITY
247	Flex Base	All	100 %

Surface Treatment Data:
****

One Course on Subgrade or Flex Base

Asph Type AC-5, AC-10, or RC-3000
Rate 0.56 gal/SY

Aggr Type PB or Lightweight
Grade 4
Rate 1 CY/135 SY

One Course on Existing Pavement (Seal Coat)

Asph Type CRS-2 or CRS-2H
Rate 0.40 gal/SY

Aggr Type B
Grade 4
Rate 1 CY/110 SY

One Course Adj to Two Course, Roadway

Asph Type AC-5 (Latex Additive)
Rate 0.30 gal/SY

Aggr Type B
Grade 4
Rate 1 CY/135 SY

Two Course

Asph Type AC-5 or AC-10 (Latex Additive)(All Courses)

Rate 1st Crse: 0.56 gal/SY (on subgrade or flex base)
1st Crse: 0.25 gal/SY (on existing pavement)
2nd Crse: 0.30 gal/SY

Aggr Type B (1st Course)
Grade 3 Mod (1st Course)
Rate 1 CY/95 SY (1st Course)

Aggr Type PB (2nd Course)
Grade 4 (2nd Course)
Rate 1 CY/115 SY (2nd Course)

Hot Asphalt-Rubber Surface Treatments

Asph Type AC-5 (Crumb Rubber Additive)
Rate 0.65 gal/SY

Aggr Type PB or Lightweight
Grade 3
Rate 1 CY/150 SY

Note: The rates of application of asphalt and aggregate are for estimating purposes only and may be varied as directed by the Engineer.

Special Notes:
****

PRE-BID CONFERENCE – Mandatory Attendance
Due to the complexity of this project, the bidders need to be aware of the requirements for this project. The pre-bid conference will be held at the Fort Worth District Regional Training Center, 2501 Southwest Loop 820, Fort Worth, TX 76133. The District is located on the southeast corner of IH 20 and McCart Street. The Regional Training Center is located in the center of the regional complex; follow the signs. The pre-bid conference will take place on August 21, 2012, at 10 a.m. In order to bid on this project, bidders must attend the pre-bid conference.

Calculating, Recording and Reporting Test Data - Use appropriate TxDOT Excel templates to calculate and record all test data. These forms are available on the TxDOT website at www.dot.state.tx.us/forms/construction.htm under the "SiteManager" heading. Submit test results within 24 hours of test completion by email or CD.

Single lane closures, except as otherwise shown in the plans, will be restricted to off-peak hours as defined in the following table:

Replaced 9-4-12

Peak Hours		Off-Peak Hours	
6 to 8:30 AM Monday through Friday	3:30 to 7 PM Monday through Friday	8:30AM to 3:30PM and 7 PM to 6 AM Monday through Friday	All day Saturday and Sunday

Work that requires closure of multiple travel lanes in the same direction, except as otherwise shown in the plans, will be performed at night between the hours of 9:00 pm and 6:00 am.

A Hazardous Material High Risk Site is located in the southeast quadrant of northbound IH 35W frontage road and Western Center Blvd, Parcel 777. This site contains three underground petroleum storage tanks. Contractor shall take a boring in this location to a depth of 10 feet prior to construction activities. If any evidence of hydrocarbons are found here, or at any other site during construction, the Engineer shall immediately be notified. The Fort Worth District has a contract to excavate and haul petroleum-contaminated soils.

Existing storm sewers and utilities are shown from the best available information. Verify the location of all underground facilities prior to starting work.

For dimensions of R.O.W. not shown on the plans, see R.O.W. map on file at the TxDOT District Office.

The Contractor's attention is directed to the following list of temporary easements and their expiration dates:

Parcel Number	Expiration Date
789 E	TBD

Complete all work in these easement areas prior to the expiration dates shown. In any event that work is done after these expiration dates, all costs for extending these dates shall be borne by the Contractor.

Remove all existing fences within the right of way and remove and replace all existing fences within easements where such fences conflict with the work. Protect the remaining fence from damage due to slacking. Erect temporary fencing in the easement areas as necessary to secure the property. Provide at least one week notice to the property owner prior to removing or moving the fence. Restore permanent fencing to an equal or better condition.

Provide all-weather surface for temporary ingress and egress to adjacent property, as directed. Materials, labor, equipment and incidentals necessary to provide temporary ingress and egress will not be paid for directly, but will be subsidiary to the various bid items.

In those instances where necessary, the governing slopes indicated herein may be varied from the limits shown, to the extent approved.

On superelevated curves the shoulders shall have the same cross-slope as the pavement, unless otherwise indicated.

All driveway openings will be determined by the Engineer and shall conform with Texas Department of Transportation "Regulations for Access Driveways to State Highways" adopted September 1953, and revised June 2004.

Take care that existing curb and curb and gutter is not discolored or damaged during construction operations. In the event of discoloration or damage, clean or repair as directed.

Remove the grass from the crown of shoulders or pavement edges by blading or other approved methods. Payment for this work will not be made directly but shall be considered subsidiary to the various items of the contract.

Whenever practical, wearing course shall be laid at full width (from outer edge of shoulder to outer edge of shoulder) in one pass. If more than one paver is used, the pavers shall be operated at the same time within 150 feet of the next paver so that a hot joint is obtained between the lanes. Should one paver break down or paving is not performed as indicated for other reasons, where a surface course is placed against an existing layer, a joint shall be prepared by trimming the full depth of the existing wearing course forming a straight vertical surface.

Locations shown for drainage structures refer to the control points of structures as follows:

1) Manholes, Inlets, and Junction Boxes -- Locations are at the centroid of the structure; when two structure types are specified, location is at the centroid of the top structure. Bottom structure may be positioned as required to align with top structure, storm drain pipes and other adjacent structures.

2) Street Inlets -- Locations are at the face of curb at a distance of L/2 from the end of the inlet.

3) Headwalls -- Locations are to the outside face of the headwall at the centerline of the pipe or box structure. For pipe headwalls with Type "P" or "C" safety end treatment, locations are on the centerline of the pipe structure at the limit of payment for pipe.

Plugging of pipes or culverts will not be paid for directly, but shall be considered subsidiary to the various bid items, unless otherwise shown on the plans.

Replaced 9.4.12

Provide temporary drain openings at all low points or other drainage structures, as required, at the Contractor's expense.

Remove any obstructions to existing drainage due to the contractor's operations, as required, at the Contractor's expense.

Install all required concrete riprap flumes immediately following the construction of ditches in which they are to be placed. In addition, apply all erosion control measures as shown on the plans or as directed, immediately following construction of channels to their required line, grade and section.

Only materials, with approved product codes or designations, from prequalified producers are accepted on bids. The Construction Division (CST) of the Texas Department of Transportation (TxDOT) maintains the material producers list of approved producer product codes or designations. Use the following website to view this list:

http://www.txdot.gov/business/contractors_consultants/producer_list.htm

Locate all luminaires, high mast poles, electrical service points, ground boxes and conduit as directed. Contractor shall pothole all existing and new utilities and drainage to verify depth and location to avoid conflicts with trenches, bores, or drill shafts. Contractor shall be responsible for contacting any utility company located within the trenching, boring, and drilling areas

Electrical service points may be moved a maximum of 50 feet from the location shown in the plans, with approval. If it is necessary to move a service point more than 50 feet, recalculate the voltage drop for all related circuits.

Mast-arm poles may be moved a maximum of 15 feet along and parallel to the roadway to be illuminated. If a pole is moved more than 5 feet, the location of adjacent poles should also be revised, so as to maintain uniform spacing.

High mast poles may be moved a maximum of 10 feet with approval. If it is necessary to move a high mast pole more than 10 feet in any direction, adjust the location of all adjacent high mast and mast-arm poles.

Furnish one of the following padlocks for service cabinets and safety switch enclosures:

Texas Department of Transportation: Master Lock, Key No. 2195
City of Fort Worth: Master Lock, Key No. 0536

Furnish one padlock for each service assembly enclosure.

Furnish one padlock for each high mast pole. The padlocks for the high mast poles will be the same type as specified for the service pole which supplies power to the high mast pole.

Furnish one padlock for each fused disconnect switch at bridges with underpass luminaires.

Where possible, conduit runs should be straight and placed with a minimum number of bends and/or ground boxes.

If the actual length of conductor in a circuit exceeds the estimated length by more than 75 feet, recalculate the voltage drop for the circuit.

The Contractor's attention is directed to all locations where illumination circuits cross existing sign light, traffic signal, surveillance, or roadway illumination circuits owned by TxDOT. The Contractor will be responsible for locating any existing circuits prior to any trenching, foundation drilling or excavation. If any existing circuits are damaged by the Contractor, splice the circuits or repair the conduit and replace the conductor as directed, to ensure proper operation of the system. Complete these temporary repairs as soon as possible after damage occurs. All labor and materials required for the temporary repairs will be at the Contractor's expense. Maintain the temporary repairs until permanent repairs are made.

Permanent repairs shall consist of the replacement of damaged or temporarily repaired conduit, conductor, ground boxes, etc., as directed, and shall be constructed in accordance with the requirements of the appropriate bid items and this project for new construction.

Permanent repairs, including the placement of ground boxes, extensive conduit runs, etc. will be measured and paid for in accordance with the appropriate bid items.

Only one permanent repair per circuit run will be considered for payment.

For access into the existing electrical service or fused disconnect switches at bridges with U/P luminaries, contact the Fort Worth District's Traffic Systems Supervisor (Traffic Signal Shop main phone number: 817-370-6505). Provide at least 72 hours of prior notification.

For modifications to an existing electrical service's branch circuit breakers, use new materials that meet the requirements of the National Electrical Code (NEC), Underwriters Laboratories (UL), Canadian Standards Association (CSA), and National Electrical Manufacturer Association (NEMA) and that comply with specifications shown in ED(4)-03 and ED(5)-03.

The Contractor may construct portions of the conduit system to coincide with phased construction. All elements installed in phases shall be protected such that future phase construction does not adversely affect elements installed during previous phases. Any elements adversely affected by later phase construction shall be reinstalled or repaired as necessary by the Contractor.

2 Replaced 9.4.12

The Contractor shall be responsible for installing metal beam guard fence (MBGF) or portable concrete traffic barrier (PCTB) at locations where permanent ITS infrastructure poles are located within the clear zone.

Locations for ITS electrical services and transformers are diagrammatic and may be relocated to accommodate field conditions and primary distribution points. Station and offset information for these devices have been represented for Contractor information. The Contractor shall coordinate all electric service locations and installation with the appropriate electric service provider. Any relocation of electrical services and/or transformers will be communicated to the Engineer for approval prior to construction.

The following standard detail sheet(s) has/have been modified:

VDZ(1)-05(FTW), VDZ(2)-05(FTW), ED(6)-03(FTW), TECL-04(FW) EPIC(FW)
ARE FORT WORTH STANDARDS

Please contact the Traffic Engineering Inspection and Maintenance Office (TEIM) at 817-370-6745 in the Fort Worth District so that a representative from the Fort Worth District Signal Shop and TEIM may attend the pre-construction meeting.

Underground utilities owned by the Texas Department of Transportation may be present within the Right-Of-Way on this project. For signal, illumination, surveillance, and communication & control contact, Texas Excavation Safety Systems (TESS) (1-800-344-8377), TEIM (817-370-6745), TxDOT Traffic Signal/Illumination Office (817-370-6505), or the City/Town utility companies for locates a minimum of 48 hours in advance of excavation. For dimensions of Right Of Way (R.O.W.) not shown on the plans, see R.O.W. map on file at the TxDOT District Office.

The following standard detail sheets have been modified:
BD-1
C402
IGEB
RW(MSE)
RW1(L)C
CH-PW-S
CLF10

LPST
A Hazardous Material High Risk Site is located in the southeast quadrant of northbound IH 35W frontage road and Western Center Blvd, Parcel 777. This site contains three underground petroleum storage tanks. Contractor shall take a boring in this location to a depth of 10 feet prior to construction activities. If any evidence of hydrocarbons are found here, or at any other site during construction, the Engineer shall immediately be notified. The Fort Worth District has a contract to excavate and haul petroleum-contaminated soils.

Item 5. Control of the Work

When supplementary bridge plans, shop drawings, shop details, erection drawings, working drawings, forming plans or other drawings, are required, the drawings shall be prepared and submitted on sheets 8 1/2 by 11 inches, 17 by 22 inches, or full size drawings reduced to half scale if completely legible. If, in the opinion of the Engineer, the drawings are not completely legible, they shall be prepared and submitted on sheets 22 by 34 inches, with a one and one-half inch left margin, and a one-half inch top, right, and bottom margin.

All sheets submitted shall have a title in the lower right hand corner. The title shall include the sheet index data shown on the lower right corner of the project plans, name of the structure or element or stream, sheet numbering for the shop drawings, name of the fabricator and the name of the Contractor.

Prior to contract letting, bidders may obtain a free computer diskette or a computerized transfer of files (from the Engineer's office) that contains the earthwork information in ASCII format, plain text files. If copies of the actual cross-sections are requested, in addition to, or instead of, the diskette, they will be available at the Engineers office for borrowing by copying companies for the purpose of making copies for the bidder, at the bidder's expense.

The locations of all signal related items, pavement markings, signing, etc. are diagrammatic **only** and may be shifted to accommodate field conditions or as directed by Engineer.

Use of any of the following will require the electronic submission of shop drawings: Alternate designs to RIP-11 or the use of aluminum to fabricate poles; alternate designs to the SMA-12 or LMA-12; City prepared signal pole standards; and ornamental signal/luminaire poles.

Item 7. Legal Relations and Responsibilities

Do not initiate activities in a project specific location (PSL) associated with a U.S. Army Corps of Engineers (USACE) permit area that have not been previously evaluated by the USACE as part of the permit review of this project. Such activities include, but are not limited to, haul roads, equipment staging areas, borrow and disposal sites. "Associated" as defined here means materials are delivered to or from the PSL. The permit area includes all waters of the U.S. or associated wetlands affected by activities associated with this project. Special restrictions may be required for such work. The contractor shall be responsible for any and all consultations with the USACE regarding activities, including project specific locations (PSLs) that have not been previously evaluated by the USACE. Provide the Department with a copy of all consultation(s) or approval(s) from the USACE prior to initiating activities.

The Contractor may proceed with activities in PSLs that do not affect a USACE permit area if a self determination has been made that the PSL is non-jurisdictional or proper USACE clearances

Replaced 9-4-12

have been obtained in jurisdictional areas or have been previously evaluated by the USACE as part of the permit review of this project. The contractor is solely responsible for documenting any determination(s) that their activities do not affect a USACE permit area. Maintain copies of their determination(s) for review by the Department or any regulatory agency.

Document and coordinate with the USACE, if required, prior to any excavation hauled from or embankment hauled into a USACE permit area by either (1) or (2) below.

(1) **Restricted Use of Materials for Previously Evaluated Permit Areas.** Document both the project specific location (PSL) and its authorization. Maintain copies for review by the Department or any regulatory agency. When an area within the project limits has been evaluated by the USACE as part of the permit process for this project:
   a. Suitable excavation of required material in the areas shown on the plans and cross sections as specified in Item 110 is used for permanent or temporary fill (Item 132, Embankment) within a USACE permit area;
   b. Suitable embankment (Item 132) from within the USACE permit area is used as fill within a USACE evaluated area; and,
   c. Unsuitable excavation or excess excavation ["Waste"] (Item 110) that is disposed of at a location approved by the Engineer within a USACE evaluated area.

(2) **Contractor Materials from Areas Other than Previously Evaluated Areas.** Provide the Department with a copy of all USACE coordination or approval(s) prior to initiating any activities for an area within the project limits that has not been evaluated by the USACE or for any off right of way locations used for the following, but not limited to, haul roads, equipment staging areas, borrow and disposal sites:
   a. Item 132, Embankment, used for temporary or permanent fill within a USACE permit area; and,
   b. Unsuitable excavation or excess excavation ["Waste"] (Item 110, Excavation) that is disposed of outside a USACE evaluated area.

The total area disturbed for this project is 317.70 acres. The disturbed area in this project, all project locations in the Contract, and the Contractor project specific locations (PSLs), within 1 mile of the project limits, for the Contract will further establish the authorization requirements for storm water discharges. The Department will obtain an authorization to discharge storm water from the Texas Commission on Environmental Quality (TCEQ) for the construction activities shown on the plans. The Contractor is to obtain required authorization from the TCEQ for Contractor PSLs for construction support activities on or off the ROW. When the total area disturbed in the Contract and PSLs within 1 mile of the project limits exceeds 5 acres, provide a copy of the Contractor NOI for PSLs on the ROW to the Engineer and to the local government that operates a separate storm sewer system.

Electrical certification for this project will be as per Item 7 of the current Texas Standard Specifications and any special provisions to Item 7.

Item 8. Prosecution and Progress

Working days will be computed and charged in accordance with Article 8.3.A.2 Six-Day Workweek.

Work is allowed to be performed during the nighttime.

Equipment will not be accepted for delivery or any payment made until the equipment, materials lists and shop drawings have been approved by the Engineer. Approval by the Engineer does not relieve the Contractor of his responsibilities to meet the requirements of the specifications and plans.

Both overhead and underground utilities exist in the vicinity of this project. The exact location of underground utilities is not known. Contact the Texas Excavation Safety Systems (TESS) or DIG TESS at 1-800-344-8377 or the area utility companies for exact locations at least 48 hours prior to commencing any work that might affect present utilities.

Personal vehicles of the contractor's employees shall not be parked within the right of way at any time.

The contractor shall coordinate the sequence of construction and traffic control plan with any adjacent construction projects to ensure the uninterrupted flow of traffic.

Material furnished by the contractor shall be new, un-depreciated stock.

No traffic will be allowed directly under any work being performed on overhead sign structures.

All materials and equipment (when not in use) shall be stored or parked 30' or more off the edge of pavement.

Item 100. Preparing Right of Way

Measurement for this item shall be along the centerline of the project with the limits of measurements as shown on the plans.

Removal of existing concrete pavement shall be in accordance with Item 104 except that this work will not be paid for directly, but will be considered subsidiary to Item 100.

Item 104. Removing Concrete

When associated with a structure to be removed, removal of riprap as required, approach slabs and shoulder drains are to be included in the unit price bid for Item 496, 'Removing Structures'.

Item 110. Excavation

Cross sections for pay quantity determination of earthwork may be developed photogrammetrically.

Submit documentation to support quantity discrepancies prior to beginning earthwork operations. Disputes regarding earthwork quantities will not be considered after earthwork has begun.

Review proposed waste sites to determine if any site is located in a "Base Floodplain" or "Floodway" as defined by the Federal Emergency Management Agency (FEMA).

If waste material from this project is placed in a base floodplain as defined by FEMA, a permit will have to be obtained from the local community responsible for enforcing National Flood Insurance Program (NFIP) regulations. The Contractor is responsible for ensuring that the owner of the property receiving the waste has obtained the necessary permit.

Items 110, 112, and 132. Excavation, Subgrade Widening, and Embankment

Sulfate-laden subgrade material that is to be treated with either lime or cement, including material up to one foot outside the proposed treatment limits, is susceptible to sulfate heave. A sulfate content test performed on expansive dark brown clay with gypsum crystals at Boring P-8 (2 to 3 feet) which resulted in 40,000 ppm of soluble sulfates.

This is an extremely high soluble sulfate content with a very high potential for sulfate induced heave if lime-stabilization is performed.

Since high sulfate levels were only encountered in one isolated location (based upon the random testing), stabilizing the subgrade with lime can be considered as long as the following is performed.

1. A geotechnical engineer will observe the area to be stabilized to identify areas where expansive clay soils with gypsum crystals are present. The gypsum crystals which are high in sulfates are an indication of areas with a risk of sulfate induced heave. The areas with gypsum crystals either not be lime stabilized or the upper 18 inches of these materials be removed and replaced with clay soils that are low in soluble sulfates prior to liming.

2. In addition, testing for sulfates be performed on a 200' spacing.
If sulfates levels are below 2,000 ppm, the risk for excessive sulfate induced heave is considered to be low whereby conventional lime stabilization could be performed.

3. If sulfates levels are over 2,000 ppm, lime-stabilization shall not be performed or the upper 18 inches of high sulfate clays should be removed and replaced with low sulfate clay soils.

Δ2 Replaced 9-4-12

Test soils for soluble sulfates in accordance with Test Method TEX-145 and TEX-146-E.

Based upon the results of Atterberg limits testing, 5 to 8 percent hydrated lime by dry weight (36 to 48 pounds per square yard per 8-inch depth) shall be anticipated to stabilize the existing clay subgrade. It shall be determined after final grading that sulfates levels are below 2,000 ppm prior to liming (see Items # 1 & 2 above).

The actual lime requirement will depend upon the actual subgrade soils exposed at final grade. Lime / Atterberg limits tests and sulfate tests be performed under the direction of a qualified Geotechnical Engineer once final pavement subgrade has been achieved in order to determine the optimum amount of hydrated lime required to stabilize the subgrade and to verify that sulfates levels are below 2,000 ppm.

Lime stabilization shall extend 1 to 2 feet beyond pavement edges, if possible, in order to reduce the effects of shrinkage during extended dry periods. After final grading has been performed, depth checks shall be performed to verify that the specified depth of stabilization is present after final grading of the stabilized subgrade.

Sand should be specifically prohibited beneath pavement areas during final grading (after stabilization), since these more porous soils can allow water inflow, resulting in heave and strength loss of subgrade soils. It shall be specified that only lime-stabilized soil will be allowed for fine grading. After fine grading each area in preparation for paving, the subgrade surface shall be lightly moistened, as needed, and recompacted to obtain a tight nonyielding subgrade.

After initial mixing, the lime treated subgrade shall be lightly rolled and wet cured (mellowed) at a minimum of +5 percentage points above the soil's optimum moisture content or wetter for 4 days prior to final mixing and compaction. The subgrade must be kept wet by regular watering during the mellowing period and inspected periodically for sulfate induced heave. If any sulfate heave is observed, mellowing shall continue until no further sulfate induced heave is observed.

Treatment of the material shall be paid for under Item 260. Removal of the high sulfate material shall be measured and paid for in accordance with Item 110 and replacement with suitable material shall be measured and paid for in accordance with Item 132.

Any excavated sulfate-laden material will be acceptable for use in fill areas. Do not place within previously specified section boundaries of subgrade to be treated with either lime or cement or where material will come in contact with other lime or cement product such as cement stabilized backfill

Item 132. Embankment

Type C embankment shall consist of suitable earth material such as rock, loam, clay or other materials as approved by the Engineer that will form a stable embankment. In addition to the above requirements, the top 2 feet of embankment, including material used to complete front slopes after final surfacing, shall have a plasticity index of 10 to 25 and a liquid limit less than 45. In fill sections of less than two feet in height, the Contractor will not be expected to remove material below natural ground in order to provide a uniform two-foot layer of low PI Type C embankment. If the Engineer determines that unsuitable material exists below natural ground elevations, then such excavation and replacement embankment material shall be paid under Items 110 and 132.

Type C1 embankment shall consist of clayey sand or very sandy clay (uniform consistency free of clau clods) having a PI of 10 to 18. It should be compacted in 8 inch lifts to 95% TEX 113E at -2% to +2% of optimum.

When embankment is placed as a bridge header bank, test each lift for compliance with density requirements, near the center of each travel lane at the following locations:

1. At the "beginning of bridge" or "end of bridge" station (if abutment is on retaining wall, location may be adjusted by not more than 5 feet.)
2. At 25-foot intervals for a distance of 150 feet in advance of the "beginning of bridge" station.
3. At 25-foot intervals for a distance of 150 feet after the "end of bridge" station.

Density tests shall be conducted by a department-certified independent testing laboratory. Results of tests shall be furnished to TxDOT within 24 hours after testing; a final copy of all test reports shall be signed and sealed by a Professional Engineer in the State of Texas and furnished within five (5) working days after testing. Areas which do not meet minimum density requirements shall be removed, re-compacted, and re-tested for compliance at the contractor's entire expense. Testing and reporting of test results will not be paid for directly, but will be considered subsidiary to this item.

Construct embankments for bridge header banks to final subgrade elevation prior to excavation for abutment caps and placement of foundation course at approach slabs. Payment for structural excavation and/or excavation for placement of foundation course will not be paid for directly, but will be considered subsidiary to the pertinent bid items.

The use of lime stabilized materials along the embankment slopes could be considered to improve embankment stability. The use of lime stabilized materials would help minimize desiccation effects and thus improve the factor of safety against slope failures.

See cross sections for limits of lime stabilized materials along the embankment slopes.

When lime stabilized material used along the embankment slope:

Δ2 Replaced 9·4·12

1. Lime stabilized soil shall be compacted in 8 inch lifts to 98% TEX 114E at -2% to +2% of optimum. The lime shall be thoroughly mixed and blended with the active subgrade soil. The lime-stabilized soils should have a PI reduction to 15 or less. The lime-stabilized soils shall be placed in accordance with TxDOT Item 260. This requires placement of adequate amounts of hydrated lime to reduce the PI to less than 15, thorough initial mixing, curing, and final mixing with final gradation achieved (60% passing No. 4 sieve) for each compacted lift. It must be verified that the clay soils to be lime stabilized have low sulfates prior to liming (less than 2,000 ppm).
2. The lime-stabilized PI materials must be placed in minimum 10 foot wide horizontal benches (compacted in 8 inch lifts). A minimum of 4 feet of lime stabilized material should be provided along the embankment slope.
3. Compacted fill shall be placed beyond the limits of the proposed slope to allow the slope to be trimmed of loose soil during final grading. In this manner, compacted fill will be exposed along the final embankment slope rather than loose non-compacted fill.

Prior to fill placement, proofrolling and compacting of the upper 8 inches of the subgrade soils shall be performed. The fill materials shall be placed in 8 inch loose lifts and compacted to a minimum of 95 percent of the maximum density as determined by TEX 114-E between optimum and +4% of its optimum moisture content. For fill deeper than 10 feet, we recommend that the compaction be increased to a minimum of 98 percent of TEX 114-E.

All fill shall be placed and compacted in 8-inch horizontal benched lifts. The fill placement along the slope should be placed and compacted beyond the limits of the final slope grade to allow the slope to be trimmed of loose soil during final grading. In this manner, compacted fill will be exposed along the final embankment slope rather than loose non-compacted fill. Compaction of loose soil along the final slope should not be allowed.

Field density and moisture content determinations shall be made on each lift of fill placed. A minimum of 1 test per lift per 2,500 s.f. of embankment and 1 test per lift per 100 linear feet of MSE wall backfill and utility trench backfill should be performed. Supervision by the field technician and the project engineer is required. Some adjustments in the test frequencies may be required based upon the general fill types and soil conditions at the time of fill placement.

At all locations where guardrail is shown to flare, widen the embankment as necessary to accommodate the guardrail.

Use approved compaction equipment for all backfilling and embankment operations. Detachable sheepsfoot-type wheels mounted on backhoes, trakhoes and other similar equipment will not be allowed for compaction operations, including pipe installation.

Additional Quality Assurance testing in excess of the number of tests required by the TxDOT Guide Schedule of Sampling and Testing due to failed tests or other retesting within the control of the Contractor will be paid for by the Contractor at the rate set for individual tests by TxDOT.

Item 160. Topsoil

Place approximately 4 inches of topsoil on areas shown or directed.

Excavation for topsoil shall not exceed 3 feet in depth unless otherwise directed.

Item 162. Sodding for Erosion Control

Furnish and place Bermudagrass sod.

Item 164. Seeding for Erosion Control

Apply seeding required between December 1 and January 31 using seed types and mixtures as shown in Item 164.2.A, Table 3. If, in the opinion of the Engineer, this does not provide an effective vegetative cover, apply "straw or hay mulch" as specified in Item 164.3.E as soon as possible. After February 1 apply warm season seeding in order to establish a permanent protective vegetative cover.

Item 166. Fertilizer

Fertilize all areas of project to be seeded.

Item 168. Vegetative Watering

Furnish and install an approved rain gauge at the project site, as directed. Furnishing and installation of the rain gauge will not be paid for directly, but will be considered subsidiary to Item 168.

Apply vegetative watering for an establishment period of thirteen weeks following application of seed or installation of sod, at a rate of ½" of water depth per week (approximately 13,030 gallons per acre). During the first four weeks after seeding, apply watering twice per week, on non-consecutive days, each at half the weekly application rate. For the remainder of the establishment period, apply vegetative watering once per week during the months of January through June or September through December, at the weekly application rate; apply watering twice per week, on non-consecutive days during the months of July and August, each at one-half the weekly application rate.

Average weekly rainfall rates for the District are as follows:

2 Replaced 9-4-12

January – 0.39"	April – 0.86"	July – 0.48"	October – 0.68"
February – 0.46"	May – 1.00"	August – 0.47"	November – 0.46"
March – 0.48"	June – 0.63"	September – 0.74"	December – 0.37"

Item 216. Proof Rolling

It is recommended that proofrolling be performed in all pavement areas.

Item 247. Flexible Base

(TY A, GR 4 - Roadway) Furnish crushed stone, gravel, or crushed gravel aggregate conforming to the following requirements:

2" Gradation:

Retained on Sieve Size	Percent (%) by Weight
1-3/4 in.	0 – 5
7/8 in.	5 – 35
No. 4	40 – 75
No. 40	65 – 85

Plasticity Index (PI)	12 max., 4 min.
Liquid Limit	45 max.
Wet Ball Mill	50 max.
Wet Ball Mill, % Increase Passing the No. 40	20 max.

Place material in two or more equal lifts unless otherwise directed not to exceed 8 in.

Do not add field sand to modify the final material to meet the requirements.

Build and maintain a 5,000 CY stockpile of approved material before and during hauling operations.

4" Gradation:

Retained on Sieve Size	Percent (%) by Weight
4 in.	0 – 5
3 in.	0 – 20
1-1/2 in.	25 – 50
3/8 in.	60 – 85
No. 40	90 – 100

Plasticity Index (PI)	12 max., 4 min.
Liquid Limit	45 max.
Wet Ball Mill	50 max.
Wet Ball Mill, % Increase Passing the No. 40	20 max.

Place material in two or more equal lifts unless otherwise directed.

Do not add field sand to modify the final material to meet the requirements.

Build and maintain a 5,000 CY stockpile of approved material before and during hauling operations.

(TY E, GR 4 – Bridge Approach Slabs) Use this item for the foundation course under the approach slabs and other locations shown on the plans. Furnish aggregate conforming to the following requirements:

Gradation:

Retained on Sieve Size	Percent (%) by Weight
1-3/4 in.	0 – 5
No. 4	30 – 75
No. 40	65 – 85

Plasticity Index (PI)	15 max.
Liquid Limit	45 max.
Wet Ball Mill	50 max.
Wet Ball Mill, % Increase Passing the No. 40	20 max.

Place material in two or more equal lifts unless otherwise directed not to exceed 8 in.

Do not add field sand to modify the final material to meet the requirements.

Cement treats in accordance with Item 275.

Additional Quality Assurance testing in excess of the number of tests required by the TxDOT Guide Schedule of Sampling and Testing due to failed tests or other retesting within the control of the Contractor will be paid for by the Contractor at the rate set for individual tests by TxDOT.

Item 260. Lime Treatment (Road-Mixed)

2 Replaced 9.4.12

Apply lime by the "slurry placement" method. Allow the mixture to mellow for a minimum of 4 days after initial mixing. If moderate sulfates are present, or for other extenuating circumstances as determined by the Engineer, allow the mixture to mellow for 7 days after initial mixing.

Except as noted below, treat the raw subgrade to a depth of 8".

Treat the raw subgrade with lime to a depth of 18" for:

- Fills equal to or greater than 18" – soil PI > 39
- Fills <18" – soil PI >29
- All cuts – soil PI > 29
- Any location directed by the Engineer

Item 275. Cement Treatment (Road-Mixed)

Treat flexible base for bridge approach slab foundation course with 2.4% cement by weight. Place in two or more equal lifts not to exceed 9" unless otherwise directed. Where there is MSE wall(s) at bridge ends, the wall backfill shall be brought up to 6-inches above the last row of straps. On top of the wall backfill, the cement treated flex base shall be used up to the bottom of the asphalt pavement base layer.

Item 301. Asphalt Antistripping Agent

Furnish a liquid antistripping agent unless directed when required by the design. The Engineer will verify the requirement prior to approval of the design.

Item 305. Salvaging, Hauling, and Stockpiling Reclaimable Asphalt Concrete

Ensure that 100% of the reclaimed material passes a 2 inch sieve.

Prior to delivery of rap salvaged and not used for this project, contact Smokey Phillips, North Tarrant County Maintenance Section Supervisor, at (817) 399-4350. Stockpile the first 8,000 CY of salvaged rap at the Tarrant County Precinct 4 facility located at the northwest quadrant of IH 820 and BU 287P. Stockpile, in equal quantity, up to 20,000 CY of the remaining salvaged rap at the northeast quadrant of IH 820 and BU 287P and up to 20,000 CY at the southwest quadrant of US 287 and Harmon Road or as directed.

Build stockpiles between 10 and 15 feet in height with layers approximately 2 feet in depth.

Item 310. Prime Coat

Provide an EC-30 for this Item. Apply EC-30 as specified in Item 314. Allow the material to remain undisturbed for a minimum of 24 hours unless otherwise directed by the Engineer.

2 Replaced 9·4·12

Provide the material as supplied by the manufacturer. Do not dilute at any time to include at the refinery.

Item 3224. Dense-Graded Hot Mix Asphalt (QC/QA)

RAP aggregate must meet the requirements of Table 1.

Provide a PG64-22 asphalt for the base course.

Furnish a CSS-1P with greater than 50% asphalt residue for the tack coat on this project. Dilution of the tack coat is not allowed.

Use the boil test, test method TEX-530-C, and provide only mixes that produce zero percent (0%) stripping for design verification and during production.

Include the approved mix design number on each delivery ticket.

For all placement operations under traffic longitudinal joint tapers are required as defined in the Miscellaneous Roadway Detail sheets.

Item 346. Stone Matrix Asphalt

Provide aggregate with a Surface Aggregate Classification (SAC) value of B for the surface course of the travel lanes.

Provide a PG76-22 asphalt for the surface course.

Provide the PG76-22 asphalt with any of the following modification alternatives:

*PG64-22 modified with SBS at the refinery

*PG64-22 modified with SBR Latex at the Hot Mix Plant.

* AC-10 modified with SBR Latex at the Hot Mix Plant.

*PG64-22 modified with Crumb Rubber and Vestenamer (TOR) at the Hot Mix Plant.

When modified at the Hot Mix Plant, provide the PG 64-22 or AC-10 refinery certification.

The Hamburg Wheel Test Requirements per Table 7 are reduced by 5,000 passes for each binder grade.

Furnish a CSS-1P with greater than 50% asphalt residue for the tack coat on this project. Dilution of the tack coat is not allowed.

Use the boil test, test method TEX-530-C, and provide mixes that only produce zero percent (0%) stripping for design verification and during production.

Include the approved mix design number on each delivery ticket.

For all placement operations under traffic longitudinal joint tapers are required as defined in the Miscellaneous Roadway Detail sheets.

Item 400. Excavation and Backfill for Structures

Class "B" bedding will be permitted in lieu of Class "C" bedding.

Sawcut concrete or asphaltic concrete pavement areas, where needed, as directed. Consider subsidiary to the pertinent Items.

Obtain approval of all compaction equipment prior to all backfilling and embankment operations.

Do not use detachable sheepsfoot-type wheels mounted on backhoes, trackhoes, and other similar equipment for compaction operations.

Item 401. Flowable Backfill.

All ITS conduits for communication and power will be encased in flowable backfill with a minimum cover of 2 inches on the sides and bottom, and 6 inches on the top of the conduit. The trench shall be backfilled from the top of the flowable backfill to the top of the trench with excavated material.

Item 403. Temporary Special Shoring

Temporary shoring for construction of retaining walls must be designed to prevent build-up of water pressures behind shoring.

Temporary shoring design shall take into account all external loading conditions including temporary earth wall, traffic surcharge, etc.

The Contractor may elect to remove all, or a portion of, the temporary shoring material. The removal must be effected in such a manner as not to disturb the retained soil or adjacent structures. Any portion of the temporary shoring left in place must be removed to minimum depth of two (2) feet below the finished subgrade or to four (4) feet below finished ground.

Replaced 9-4-12

Item 416. Drilled Shaft Foundations.

Stake all Foundation, for approval, before beginning drilling operations, as directed. Examples of types of foundations are Bridge Supports and Sign Supports, etc.

Remove spoils, daily, out of flood plain, or as directed. No spoil material or drilling mud will be allowed to enter into any stream.

Take one core hole at each abutment and bent, as directed.

Install anchor bolts so that high mast reference line is parallel to freeway roadway centerline or as shown on the layout sheets.

Stake traffic signal foundation locations and have them approved by the inspector before installation. This will ensure that all luminaires and mast arms are clear of all overhead lines and underground utilities **before** drilling begins. The signal inspector together with the contractor will calculate the vertical signal head clearance before placing any traffic signal pole foundation.

Stake ITS and Toll equipment foundation locations and have them approved by the inspector before installation. This will ensure that all poles and/or structures are clear of all overhead lines and underground utilities **before** drilling begins. The signal inspector together with the contractor will calculate the vertical signal head clearance before placing any traffic signal pole foundation.

Form, or provide a smooth finish to, portions of the drilled shaft that project above the ground line. Place a ¾ inch chamfer on the top edge of each ITS drilled shaft foundation.

Notify the Inspector 48 hours prior to forming and placing concrete in any unit of all the Signal Pole and Controller Foundations. Do not place concrete without an Inspector present. Failure to inform the Inspector and provide adequate time to arrive on the job site may result in removing and replacing the foundation.

Grounding rod and associated grounding conductor for each drill shaft foundation shall be subsidiary to the foundation bid item.

Contractor shall use low profile rig for installation of drilled shafts where required. No separate payment shall be made for use of low profile rig.

Item 420. Concrete Structures

Remove all loose Formwork and other Materials from the Floodplain or drainage areas, daily,

Provide weepholes at bridge ends in the wingwalls as directed.

Concrete for "Interior Bents" will be paid for as a plans quantity.

The district survey department will provide two bronze ROW Markers per bridge to be cast into the bridge concrete at a location determined by the engineer or the district survey department.

Use permanent metal deck forms or prestressed concrete panels.

Check the sign plans for locations of clearance signs and brackets on structures.

Mass Concrete will be a plans quantity item.

Where Retaining Walls are integral parts of the abutment header, do not place the abutment cap prior to backfilling the wall and the abutment area up to the elevation of the bottom of the abutment cap.

The "H" values shown on Bridge Layouts are estimated column heights. Calculate the actual column heights based on field conditions.

Do not perform any concrete surface placement work when the weather, as indicated by National Oceanic and Atmospheric Administration (NOAA), states a chance of rain of 40% or greater, unless otherwise directed.

Foundations for ITS and Toll equipment ground mounted cabinets and ITS Satellite Building will be constructed with Class B concrete. The following cabinet and/or building foundation dimensions are as follows:

- ITS Ground Mounted Cabinet (DMS and SDMS) – 6'L x 6'W x 12"D
- ITS Satellite Building – 30'L x 12'W x 12"D
- Tolling Point Generator/Equipment Shelter – 24'L x 12'W x 12"D
- Tolling Advanced Toll Rate DMS (ATRDMS) – 6'L x 6'W x 12"D
- Tolling Roadside Equipment Cabinet – 3'L x 1.5'W x 12"D

Prior to construction of roadside toll equipment cabinet foundations and toll generator foundation pads, Contractor to coordinate with Toll Integrator to verify cabinet and generator dimensions and ensure the foundation size is constructed to meet Toll Integrator requirements. Contractor to also verify location of foundation with Toll Integrator and adjust accordingly to meet Toll Integrator system requirements before construction. Contractor stake limits of each foundation and get approval from Toll Integrator prior to construction.

A grounding ring system will be constructed for each Satellite Building and Toll Gantry location. Contractor to include all materials and services necessary to construct the grounding system

Replaced 9.4.12

consisting of a grounding ring conductor, grounding wells, grounding triad, and ground rods for each location as indentified and detailed in the plans. This work will be subsidiary to this item.

All ground rods and associated grounding conductor for foundations that are not associated with a grounding ring system are subsidiary to the foundation bid item.

Item 421. Hydraulic Cement Concrete

The strength testing equipment for concrete will be capable of producing an electronic printout of the test results.

Include the approved mix design number on each delivery ticket.

Contractor personnel performing job-control (QC) testing on concrete must be ACI certified. Provide a copy of all personnel certification papers to the Engineer at the preconstruction meeting. The Engineer may require the Contractor's testers to provide the certification papers upon arrival and before testing at the job site. Furnish a hard copy of all testing equipment calibration reports at the preconstruction meeting when non-TxDOT equipment is used to test concrete. Furnish updated reports as equipment is calibrated through the project contract. The calibration frequency will match TxDOT's and will apply for each piece of equipment as follows:

Slump Cone - Annual
Air Meter - Every 3 months
Compression Tester - Annual
Beam breaker - Annual

The compression testing equipment for concrete will be capable of producing an electronic printout of the test results.

The Engineer may allow the use of local commercial laboratories under contract to provide these services. The previous requirements are required from the Commercial Laboratory prior to any work being performed.

Furnish mix designs to the Engineer in a format compatible to the latest version of the Department's Construction Management System (Site Manager).

All bridge rails will use HPC concrete.

Design and analyze all concrete for pavement and structures using the Concrete Works Program Version 2.1.3 (Beta) for acceptance by TxDOT. Use Test Method Tex-426-A to develop input for the Concrete Works Program. Develop Maturity curves in English only units for each Class S, C, P, and F concrete design or re-design. This work is subsidiary to this item.

Item 422. Reinforced Concrete Slab

All structural steel within a unit shall be fully erected before placing the slab.

Item 423. Retaining Wall

For MSE walls, provide a system from one of the following approved suppliers:

REINFORCED EARTH WALLS
THE REINFORCED EARTH COMPANY
1331 AIRPORT FREEWAY, SUITE 302
EULESS, TX 76040-4150
(817) 283-5503

RETAINED EARTH WALLS
FOSTER GEOTECHNICAL
901 NORTH HIGHWAY 77
HILLSBORO, TX 76645
(254) 580-9100

REINFORCED SOIL EMBANKMENT WALLS
TEXAS WELDED WIRE, INC.
645 W. HURST BLVD.
HURST, TX 76053
(817) 282-4560

STABILIZED EARTH WALL
T&B STRUCTURAL SYSTEMS, INC.
6800 MANHATTAN BLVD, SUITE303
FORT WORTH, TX 76120
(817) 280-9858

STRENGTHENED EARTH WALLS
HANSON CONCRETE PRODUCTS
3500 MAPLE AVE.
DALLAS, TX 75219
(214) 525-5877

TRICON RETAINED SOIL WALLS
TRICON PRECAST INC.
15055 HENRY RD.

2 Replaced 9.4.12

HOUSTON, TX 77060
(713) 931-9832

TENSAR RETAINING WALL SYSTEM
TENSAR EARTH TECHNOLOGIES, INC.
5775-B GLENRIDGE DR.
ATLANTA, GA 30328
(404) 250-1290

STRENGTHENED SOIL WALLS
SHAW TECHNOLOGIES INC.
P.O. BOX 271448
FLOWER MOUND, TX 75027
(972) 490-1924

STRUCTURAL EMBANKMENT SYSTEMS
ROBERTSON ENGINEERING INC.
327 N. DENTON STREET, SUITE 100
WEATHERFORD, TEXAS 76086
817-599-5700

VP WALL SYSTEM
VALLEY PRESTRESS PRODUCTS, INC.
P.O. BOX 1367
MISSION, TX 78573
(956) 584-5701

All embankment placed under retaining walls shall have a PI of less than 30.

TxDOT Item 423, Type D select backfill shall be used in all walls. Zone between reinforced volumes to be embanked with select backfill Type D as shown on the applicable retaining wall typical sections.

TxDOT Item 132, Type C3 (with a PI of 10 to 25 and LL less than 42) or crushed on site limestone backfill must be used as retained fill in the active pressure zone behind the reinforced zone for the MSE walls. Type C3 Embankment will not be paid for directly, but considered subsidiary to Item 423.

The active pressure zone is the area bounded by the reinforced zone and a 1(H):1(V) outward slope beginning three feet horizontally from the end of the reinforced zone at the base of the wall. The backfill must extend to two feet below the top of the wall or bottom of the lime stabilized layer of the pavement section.

A permanent moisture barrier graded to drain must be placed adjacent to the base of the wall for a distance of at least 15 feet from wall face or 1.5 times height of the wall, which ever is less. Moisture barrier should consist of either concrete riprap or 8 inch select fill (Type C2 Embankment). Type C2 Embankment will not be paid for directly, but considered subsidiary to Item 423.

Where pavement is not located behind the wall, the upper two feet must consist of compacted clay soil with a PI index greater than 25 (Type C4 Embankment). Type C4 Embankment will not be paid for directly, but considered subsidiary to Item 423.

The Contractor's wall designer must verify during their final design that the actual maximum bearing pressures below retaining walls are less than the allowable bearing capacities summarized in Table 3 on the geotechnical recommendation sheets (Sheet 1074).

Unless otherwise noted on the plans, provide Ashlar Stone finish on all retaining walls. Final wall appearance will be determined by the Engineer including stone module size, spacing and depth, pilaster size and spacing, corner details etc.. Face finish, corner and pilaster shall be considered subsidiary to item 423.

Form liners for CIP retaining walls shall match precast MSE wall panels in stone module size, texture, etc. to achieve an appearance consistent with adjacent MSE retaining walls. Sample CIP castings shall be provided along with MSE sample panels for approval by the Engineer prior to wall construction. All retaining wall face finish samples shall be considered subsidiary to Item 423. See Retaining Wall Finish Details sheet for additional information on face finish pattern, sample panel requirements, etc.
Stain and/or paint colors will be provided by the Engineer prior to retaining wall construction. Stain and/or paint finish shall be considered subsidiary to Item 423. The contractor shall furnish a sample of the proposed backfill to the wall supplier before strap lengths are engineered. The proposed backfill material sample to the supplier shall include all tests identified in the plans and specification. This shall not be paid for directly but shall be considered subsidiary to various bid items.

Item 425. Precast Prestressed Concrete Structural Members

The contractor shall be required to erect various beams on this project in limited space conditions. The contractor shall provide the necessary equipment and personnel to accomplish this work under these restricted conditions. No separate payment shall be made for this work.

Item 427. Surface Finishes for Concrete

Unless otherwise noted, provide a surface area **II** with a rub finish on the bridges.

Item 428. Concrete Surface Treatment

2 Replaced 9.4.12

Provide a Class II surface treatment (Type I) to the roadway slab, inside face of rail and any other areas shown on the detail sheets

Item 432. Riprap

Provide weepholes as directed.

Provide Class B Concrete for riprap.

The quantities for riprap at the location indicated may be varied to the extent necessary to ensure proper functioning for the purpose intended.

All concrete riprap shall be 5" (.42') in thickness, unless otherwise shown in the plans, and shall be reinforced.

An 8 inch (.67') by 18 inch (1.5') toewall will be required at the exposed edge of all concrete riprap, unless otherwise directed.

Locations and lengths of riprap flumes shown on the plans are approximate. Actual lengths and locations are to be determined in the field.

All ITS and Toll equipment foundations will have Class B concrete riprap surrounding the foundations. The paved area will uniformly encompass the drill shaft of the support structure with a thickness of 4 inches. Provide the following minimum cubic yards of concrete for the ITS/Tolling equipment:

- Radar Vehicle Sensing Device (RVSD) – 0.388 cy
- Closed Circuit Television (CCTV) – 0.388 cy
- Dynamic Message Signs (DMS) – 0.465 cy
- Advanced Toll Rate DMS (ATRDMS) - .465 cy

Item 440. Reinforcing Steel

Top and bottom layers of slab reinforcing steel shall be epoxy coated.

Item 441. Steel Structures

The contractor shall be responsible for stabilization of partial unit.
The contractor shall be required to erect various beams on this project in limited space conditions. The contractor shall provide the necessary equipment and personnel to accomplish this work under these restricted conditions. No separate payment shall be made for this work

Item 454. Bridge Expansion Joints

Provide a relief to the backside of the SSTR traffic rail to the bridges and retaining walls as shown in the standard.

Item 464. Reinforced Concrete Pipe

All bends and connections in pipe shall be prefabricated.

Item 465. Inlets, Manholes, Junctions

Stage 1 (bottom) of inlets, manholes and junctions may be precast concrete. However to allow for changes in final grade elevations or variations in flowlines for any reason, all stage 2 (top) elements and risers will be cast-in-place. Stage 1 is defined as the concrete element receiving conduits with clear dimensions starting at the lowest flowline to a maximum of 1' above the highest soffit.

Item 466. Headwalls and Wingwalls

Do not use precast headwalls/wingwalls.

Item 496. Removing Structures

Notify the Texas Department of State Health Services (DSHS) prior to demolition or renovation of bridges or other structures, using DSHS Form APB#5, "Demolition/Renovation Notification Form". The form and instructions may be found on the DSHS Asbestos Programs Branch web page at http://www.dshs.state.tx.us/asbestos/notification.shtm. The DSHS notification form must be hand-delivered or mailed to (received at) the DSHS Austin office at least ten working days (10) days prior to commencing demolition or renovation. Fax or e-mail notifications will not be accepted. For projects with multiple bridges, a single notification, with a listing of all bridges or structures to be demolished or renovated and the expected start dates of their demolition or renovation (the start date is defined as the first date of visible demolition activities). Notify the DSHS Regional or Local inspector of all start date changes. The expected project completion date may be used as the "end" date.

Removal of riprap as required, approach slabs and shoulder drains to be included in the unit price bid.

When required by the plans, partial or complete removal of a structure for staged construction shall be accomplished in a manner which does not cause damage to the remainder of the

Replaced 9-4-12

structure or its supporting members. Submit the procedure for removal of superstructure or substructure in writing or plan drawing for approval prior to implementation.

Do not cut simple I-beams less than 80' in length.

Cut continuous I-beams or simple I-beams more than 80' in length, into sections not less than 40' in length or more than 70' in length, as directed. Contact the District BRINSAP Engineer, Greg Timmons, P.E., at 817-370-6766 for information on lengths needed.

Salvage and transport the following items to the storage area located at the intersection of IH 20 and US 287 in Tarrant County, or as directed:

STEEL I-BEAMS
SHOES
DIAPHRAGMS

Item 502. Barricades, Signs, and Traffic Handling

Maintenance of roadways, not paid as "constructing detours", and designated in the traffic control plan to carry traffic, will be the responsibility of the Contractor and will be paid for by "Contractor Force Account or Agreed Unit Price".

Permanent signs may be installed when construction in an area is complete and they will not be in conflict with the traffic control plan for the remainder of the job.

Existing signs are to remain as long as they do not interfere with construction and they do not conflict with the traffic control plan.

Any sign not detailed in the plans but called for in the layout shall be as shown in the current "Standard Highway Sign Designs for Texas".

When traffic is obstructed, arrange warning devices in accordance with arrangements indicated in the latest edition of the "Texas Manual on Uniform Traffic Control Devices".

Cover or remove any work zone signs when work or condition referenced is not occurring or when any hazard related to the signs no longer exists.

Item 504. Field Office and Laboratory

Furnish the following structures for this project:

Type	No.
Field Lab (Ty. A)	1
Field Office and Lab (Ty. B)	1

Furnish a copier and facsimile meeting the requirements of DMS-10101, "Computer Equipment".

Furnish the following for the Field Office structure:

Item	No.
Desktop Microcomputer	1
Laptop Microcomputer with Air Card	1
Internet Service	1
Wireless Router	
Printer *	1
Plain Paper Fax Machine *	1
Copier capable of copies up to 11"x17" *	1
Desks (minimum)	3
Chairs (minimum)	3
Four drawer locking metal filing cabinet	1
Lockable 3'x3' floor space storage closets	2
Refrigerator (minimum 10 cu ft)	1
Microwave Oven	1
Water Cooler with Hot & Cold Dispenser	1
Weekly Janitorial Service	1
Minimum 4'x4' Porch with Steps & Handrail at Each Door	1

The field office structure and its contents will be subject to approval by the Engineer prior to beginning of work.

The field office structure with all appurtenances will become the property of the contractor once the project is complete and accepted by the Engineer.

Laptop Microcomputers shall have an Intel Pentium IV (1.5 GHz) processor, or better.

* Integrated printer/copier/scanner/fax units will be permitted.

Item 506. Temporary Erosion, Sedimentation, and Environmental Controls

Remove accumulated sediment and/or replace SW3P controls when the capacity has been reduced by 50% or when the depth of the sediment at the control structure exceeds one foot.

Item 512. Portable Concrete Traffic Barrier

Slotted or lapped PCTB and/or Single Slope Barrier and/or Low Profile Barrier:

Replaced 9-4-12

Furnish barrier in compliance with Single-Slope Concrete Barrier (SSCB) and/or Low Profile Concrete Barrier (LPCB) standards as shown on the plans.

Class "H" Concrete furnished for this Item shall have a minimum 28 day compressive strength of 3600 PSI.

When slotted-end PCTB is used in a permanent installation, grout the joints with an approved non-shrink grout material.

Provide the hardware assemblies to join barrier sections, including barrier from stockpile. Slotted joints require a welded tie bar assembly, as detailed on the PCTB standard detail sheet. Low Profile PCTB requires a 1¼" x 2'-2" threaded rod, two (2) 1 ¼" hex nuts, and two (2) standard USS washers, grade 5, for each section. Lapped-end PCTB requires a 1" x 1'- 4" threaded rod, two (2) 1" hex nuts, and two (2) 3" x 3" x ¼" plate washers.

Connection hardware will remain the property of the State upon completion of the project and will not be paid for directly, but considered subsidiary to Item 512. Deliver hardware to the Interchange of IH 20 and US 287 in Tarrant County.

Delineate all barriers in accordance with Barricade and Warning Sign (BC) Standards. Barrier delineation will not be paid for directly, but will be subsidiary to this Item.

Replace any traffic barrier which, in the opinion of the Engineer, is damaged by the traveling public to the extent it is no longer serviceable, using traffic barrier from the designated stockpile site. The Contractor will be paid to remove and replace the traffic barrier damaged by the traveling public. Damaged traffic barrier will become the property of the Contractor to dispose of off the project site. When no longer needed, the barriers should be delivered to the stockpile at the interchange of IH 20 and US 287 in Tarrant County.

Type F CSB and/or Single Slope Barrier and/or Low Profile Barrier:

Traffic barrier for this item is in stockpile at the interchange of IH 20 and US 287 and at SH 199 and Love Circle in Tarrant County.

Furnish barrier in compliance with Concrete Safety Barrier (CSB), Single-Slope Concrete Barrier (SSCB) and/or Low Profile Concrete Barrier (LPCB) standards as shown on the plans.

Class "H" Concrete furnished for this Item shall have a minimum 28 day compressive strength of 3600 PSI.

Provide the hardware assemblies to join barrier sections, including barrier from stockpile. Furnish Type J connections for Concrete Safety Barrier. Low Profile PCTB requires a 1¼" x 2'-

2" threaded rod, two (2) 1 ¼" hex nuts, and two (2) standard USS washers, grade 5, for each section.

Connection hardware will remain the property of the State upon completion of the project and will not be paid for directly, but considered subsidiary to Item 512. Deliver hardware to the location specified.

Delineate all barriers in accordance with Barricade and Warning Sign (BC) Standards. Barrier delineation will not be paid for directly, but will be subsidiary to this Item.

Existing PCTBs north of Sta 1506+00 may be used for traffic control on this project as long as they are not damaged. The Contractor shall deliver existing PCTBs to a location within the Fort Worth district of TxDOT as directed by the Engineer.Replace any traffic barrier which, in the opinion of the Engineer, is damaged by the traveling public to the extent it is no longer serviceable, using traffic barrier from the designated stockpile site. The Contractor will be paid to remove and replace the traffic barrier damaged by the traveling public. Damaged traffic barrier will become the property of the Contractor to dispose of off the project site.

Item 514. Permanent Concrete Traffic Barrier

All concrete traffic barriers shall be cast-in-place unless otherwise noted in plan.

Item 528. Colored Textured Concrete and Landscape Pavers

Ensure that all signal pole foundations, sign bases, electrical ground boxes, manholes, inlets and other appurtenances within the area to be paved are constructed to the proper finished grade.

The paver installation contractor shall have a minimum of three (3) years experience in the installation of interlocking concrete pavers.

All pavers shall conform to A.S.T.M. C 936(6). Where exposed to vehicular traffic, pavers shall be 3-1/8" thick. In all other areas, pavers shall be a minimum 2-3/8" thick. Provide certification from a professional test laboratory showing that the materials used and fabrication of the pavers meet or exceed these requirements. All pavers shall be free of defects that would interfere with proper placement or impair the strength of performance of the units. Acceptance of pavers which contain minor cracks, incidental to the usual methods of manufacture and shipping or resulting from customary methods of handling and delivery, shall be at the Engineer's discretion.

Deliver pavers to the project site on pallets, bound in such a manner as to prevent damage to the product during shipping, handling, and unloading.

Furnish flexible base meeting the requirements of Item 247, Type A, Grade 4.

Restrain all edges of the paved area. Edge restraints shall be cast-in-place concrete grade beams, 4" wide x 8" deep, or as shown in the plans, or existing sidewalk, curb, or pavement as shown.

Use string lines to maintain true pattern lines relative to back of curb, sidewalk, pavement or edge restraint, or as directed.

Fill gaps at the perimeter of the paved area with standard edge units or units cut to fit. Cut pavers with a masonry saw, leaving a smooth, clean edge. Pavers which spall along a cut edge will be rejected.

Upon completion of construction, sweep and clean the paver surface of all excess sand, soil, foreign material, and/or stains.

Items 530 And 531. Intersections, Driveways and Turnouts, and Sidewalks

The furnishing and installation of the sand cushion in the proposed sidewalks, sidewalk ramps and driveways will not be paid for directly but shall be considered subsidiary to this bid item.

Item 540. Metal Beam Guard Fence

The locations and lengths of guard fence shown on the plans are approximate. Actual lengths and locations are to be determined in the field.

When guardrail posts are placed in a finished surface, backfill the top 4 inches with an asphaltic material, domed to carry water away from the posts or as shown on the plans. The furnishing and installation of the asphaltic material backfill will not be paid for directly but shall be considered subsidiary to this Item.

Item 542. Removing Metal Beam Guard Fence

Remove existing metal beam guard fence only when authorized.

Item 545. Crash Cushion Attenuators

Remove salvageable units and stockpile at the interchange of IH 20 and US 287 in Tarrant County.

Item 550. Chain Link Fence

TxDOT Standard Sheet **Chain Link Fence CLF10** is modified from 6' to 8' high fence. A barb wire top is required. Chain link fence is required for the ITS Satellite Building site.

Item 556. Pipe Underdrains

△1 Replaced 9-4-12

Install pipe underdrains at locations shown on the plans or as directed.

The unit price bid per linear foot of "pipe underdrain" shall include the cost of making connections to storm drain lines. Underdrain clean-outs will be considered subsidiary to item 556.

Furnish Type E filter material for this project conforming to the following gradation (Test TEX-200-F, Part 1):

Retained on Sq. Sieve	Percent by Weight
1/2 in.	0
3/8 in.	0 - 2
No. 4	40 - 85
No. 10	95 - 100

Item 585. Ride Quality for Pavement Surfaces

Use Surface Test Type B pay adjustment schedule 2 to evaluate ride quality of the travel lanes in accordance with Item 585, "Ride Quality for Pavement Surfaces."

Use Surface Test Type B pay adjustment schedule 2 to evaluate ride quality of the shoulders and ramps in accordance with Item 585, "Ride Quality for Pavement Surfaces."

Item 610. Roadway Illumination Assemblies.

Complete roadway illumination in the initial stages of construction. Make every effort to keep the jobsite lit for the duration of the project as allowed for by construction phasing.

For both transformer and shoe-base type illumination poles, provide double-pole breakaway fuse holder as shown on the Texas Department of Transportation (TxDOT) materials producers list. Category is "Roadway Illumination and Electrical Supplies". Fuse holder is shown on list under Items 610 & 620. Provide 10 amp time delay fuses.

Provide luminaires from prequalified material producers list as shown on the Texas Department of Transportation (TxDOT) materials producers list. Category is "Roadway Illumination and Electrical Supplies.

Furnish 150 Watt Induction Fluorescent Underpass luminaires rated for operation at 240 volts. Underpass illumination circuits shall not be connected to branch circuits for High-Mast lighting. Contractor to furnish and install disconnect and 480V – 120/240V isolation transformer that is in accordance with the Plans and TxDOT Standard RID (UP)-07. Disconnects and isolation transformers shall not be paid for directly, but shall be considered subsidiary to the installation of underpass luminaires. Underpass luminaires shall be wired for 240VAC operation as shown on the Plans.

Roadway Illumination Poles do not need to be pre-qualified when TxDOT RIP (Roadway Illumination Pole) standard sheets are included in the plan set.

Perform work in accordance with the details shown on the plans, and the requirements of Item 610 and applicable Special Provisions to Item 610.

Fabricate steel roadway illumination poles in accordance with TxDOT standards RIP (Roadway Illumination Pole). Poles fabricated according to RIP standard sheets require no shop drawings.

Alternate designs to RIP or the use of aluminum to fabricate poles will require the submission of shop drawings electronically.

For instructions on submitting shop drawings electronically go to:
http://www.dot.state.tx.us/business/contractors_consultants/bridge/shop_drawings.htm

Click on "Electronic Submission of Shop Drawings" File is titled: Guide to Electronic Shop Drawing Submittal.

Preapproved materials for luminaire fixtures and wiring may be found on the Departmental Material Producers (MPL) list.

Remove and salvage nine (9) roadway illumination pole assemblies and any other existing unused light pole foundation located along the IH 35W northbound frontage road, south of Western Center Boulevard. All electrical conductors shall be removed prior to the removal of the pole assemblies and underground conduit shall be abandoned in place. Existing illumination ground boxes shall be removed by the Contractor, or as directed by the Engineer. This will not be paid for separately, but will be considered subsidiary to the removal of light poles and underpass luminaires. Foundations shall be removed to a minimum depth of 36-inches below finish grade, or as directed by the Engineer. Remove and salvage sixteen (16) underpass luminaire fixtures and the associated disconnect switch(s) located on the bridge at Western Center Boulevard. All electrical conductors shall be removed prior to the removal of the luminaire fixtures and disconnect switch(s). Mounted underpass conduit shall be removed. All removed illumination assemblies and light fixtures shall be the property of the City of Fort Worth. Removed electrical conductors, underpass disconnect switch(s), and underpass conduit

2 Replaced: 9.4.12

shall become the property of the Contractor. Removal of roadway illumination assemblies shall be coordinated with the City of Fort Worth. Provide at least 72 hours of prior notification.

Transport all roadway illumination assemblies and light fixtures removed by the Contractor and retained by the City of Fort Worth to the Fort Worth Maintenance Yard 3200 Yuma St. in Fort Worth, Texas. Contact Mr. Jim Bob Wakefield (Phone [817] 392-8033) before transporting the roadway illumination assemblies. A City of Fort Worth inspector shall be present to see that all removed transformer bases are sufficiently destroyed to prevent their reuse - these shall become the property of the Contractor. These roadway illumination assemblies are to be removed and transported without damage to any of the assemblies. Roadway illumination assemblies will be inspected when they are unloaded at the City of Fort Worth Maintenance Yard 3200 Yuma St. Any damaged lens, luminaire housing, etc., which is not suitable for reuse will become the property of the Contractor and shall be removed immediately.

Limitations on Use of the RIP-11 Standard

The Roadway Illumination Pole (RIP-11) standard details were developed for installations in locations where the 3-second gust basic maximum wind speed is 110 mph, and where the elevation of the base of the pole is less than (i.e. not more than) 25' above the elevation of surrounding terrain, in accordance with the "AASHTO Standard Specifications for Structural Supports for Highway Signs, Luminaires and Traffic Signals," 4th Edition (2001) (AASHTO Design Specifications). For poles to be installed in regions where the maximum basic wind speed exceeds 110 mph or to be mounted more than 25' above the surrounding terrain, the contractor shall provide poles meeting the following requirements:

A. **Submittals.** Following the electronic shop drawing submittal process (see ftp://ftp.dot.state.tx.us/pub/txdot-info/library/pubs/bus/bridge/e_submit_guide.pdf), the contractor shall submit to the Engineer, for approval, fabrication drawings and calculations for the poles. The drawings and calculations shall be sealed by a Texas registered or licensed professional engineer (P.E.).

B. **Luminaire Structural Support Requirements**. Lighting poles, arms, and anchor bolt assemblies shall have a 25 year design life to safely resist dead loads, ice loads and the required basic wind speeds at the location of installation in accordance with the current edition of the AASHTO Design Specifications. For transformer base poles, the fabricator shall include transformer base and connecting hardware in calculations and shop drawing submittals. All transformer bases shall have been structurally tested to resist the theoretical plastic moment capacity of the pole. Certification of the plastic moment load test and FHWA breakaway requirement test of the model of base being furnished shall be submitted with the shop drawings. Shop drawings shall show breakaway base model number, and manufacturer's name and logo. Manufacturer's shop drawings shall include the ASTM designations for all materials to be used.

Item 613. High Mast Illumination Poles.

Construct 80 mph high mast poles of heights 100 ft, 125 ft, and 150 ft according to HMIP-98 standard sheets. Ground sleeves are required for these poles. Elimination of the ground sleeve will not be allowed.

Item 614. High Mast Illumination Assemblies.

Complete high mast lighting in the initial stages of construction. Make every effort to keep the jobsite lit for the duration of the project as allowed for by the construction phasing.

Install high mast assembly so that reference line is parallel to freeway centerline or as shown on layout sheets. (Also see note to Item 416).

Two high mast drills will be required for the lowering/raising of the high mast rings (one for use during construction by the Contractor and one for use following construction by TxDOT). At the end of construction, Contractor shall deliver the high mast drill to the TxDOT Fort Worth Signal Shop.

Travelways referred to on HMID standard sheets shall be defined as all main lanes, direct connections, ramp gores and intersections inside the area to be lighted by high mast poles.

All high mast illumination assemblies shall be from the Pre-qualified Material Producers List as shown on the Texas Department of Transportation (TxDOT) – Construction Division's (CST) materials producers list. Category is "Roadway Illumination and Electrical Supplies."

72 hours in advance of the raising of the high mast ring, contact the Fort Worth District's Traffic Systems Supervisor (Traffic Signal Shop main phone number: 817-370-6505) so that it can be thoroughly inspected.

Item 616. Performance Testing of Lighting Systems.

The Contractor shall provide thirty days' written notice to the engineer of his intent to start the test period for each service point and its related circuits.

Item 618. Conduit, Item XXXX Multi-duct Conduit.

Bed all PVC conduit placed by open cut in field sand as approved.

Conduit for the ground rod at high mast poles shall be schedule 40 PVC.

Conduit bends at roadway illumination assembly foundations will not be paid for directly, but will be considered subsidiary to Item 416.

2 Replaced 9.4.12

The fused disconnect switch used for underpass circuits will not be paid for directly, but will be considered subsidiary to the various bid items.

Do not use cast iron junction boxes in concrete traffic barriers and single slope traffic barriers. Use polymer concrete junction boxes instead of the cast iron junction boxes shown on standard sheets CTBI (3), CTBI (4), AND SSCB (4). Mount the junction boxes flush (+ 0", - ½") with concrete surface of concrete barrier.

Use materials from prequalified material producers list as shown on the Texas Department of Transportation (TxDOT) materials producers list. Category is "Roadway Illumination and Electrical Supplies."

The polymer concrete barrier box will not be paid for separately, but will be considered subsidiary to ITEM 618, "CONDUIT".

Where PVC, duct cable, and HDPE conduit 1" and larger is allowed and installed as per TxDOT standards, provide a PVC elbow in place of the galvanized rigid metal elbow required by the Electrical Detail standards. Ensure the PVC elbow is of the same schedule rating as the conduit to which it is connected.

Ensure only a flat, high tensile strength polyester fiber pull tape is used for pulling conductors through the PVC conduit system.

ITS conduit will be installed a minimum depth of 24 inches, when trenching methods are used, unless otherwise shown on plans.

ITS conduit will be installed a minimum of 60 inches deep when bored under existing pavement. Conduit will be placed under existing pavement by approved boring method, or as directed. Pits for boring will not be closer than two feet from the edge of pavement, or as directed. Water Jetting will not be permitted.

Use Schedule 40 PVC conduit for all ITS main duct banks, cross road duct banks, and lateral duct banks as identified in the plans with the exception at bridge crossing where the conduit is exposed. Where duct bank crosses bridge structures, use UV stabilized Schedule 80 PVC conduit.

Main duct bank and cross road conduit will be 4 inch Schedule 40 PVC with 1-1/4 inch inner duct. The east side main duct bank will contain two (2) 4 inch multi-duct conduit. The west side main duct bank will contain one (1) 4 inch multi-duct. Consult the plans for cross road and lateral conduit size and quantities.

Maintain a minimum separation of 12 inches between communication and power conduits.

Cable fabric separators may be used in lieu of inner duct with the approval of TxDOT.

Each conduit will contain a 16 gauge trace wire. Bury a 3 inch 4-mil polyethylene underground warning tape approximately 12 inches above the conduit with the warning "Caution Fiber Optic Cable Buried Below" continuously printed along the tape.

For conduit placed by trenching in paved areas, the contractor shall cut and restore pavement in accordance with Item 400, Article 400.3.A.1.b, and as shown in the Plans. Cut pavement using only approved saws. Unless otherwise shown on the Plans, the trench shall be backfilled with material equal in composition and density to the surrounding area, and by replacing any surfacing, such as asphalt pavement or concrete riprap, with like material to equivalent condition.

Where possible, conduit runs should be straight and placed with a minimum number of bends and/or ground boxes.

Contractor to furnish and install new conduit and conduit fittings that are UL listed and meet the applicable requirements of NEMA, the NEC, and TxDOT material specification DMS-11030, Conduit.

NEMA rated 24" x 24" x 12" junction boxes will be mounted to structures to allow conduit crossing along bridges. See plans for specific locations and detail on conduit hanger system. All conduit hangers and junction boxes shall be subsidiary to this item.

Conduit entry to type "AS" ground boxes shall be perpendicular to the perforated sidewall. Do not use 90 degree or right angle fittings to achieve perpendicular conduit alignment. Where approved by the Engineer, use 3 foot minimum long radius bends into the ground box. Where conduit is placed by jacking and/or boring, adjust the conduit placement to accommodate perpendicular entry and long sweep bends.

Conduit to be placed along frontage roads shall have a minimum horizontal clearance of six feet from the back of curb, unless such clearance shall interfere with "straight through" conduit placement, conflict with retaining walls, sign foundations, or utilities, or introduce additional or unnecessary right angle bends into the cable path.

Place in all installed conduits, a permanent non-metallic pull cord, with a minimum tensile strength of 600 pounds.

Unless otherwise shown on the plans or as directed, the location for conduits is diagrammatic only. Stationing and offset information have been provided to identify a proposed location for equipment. The Contractor may adjust the location of conduit up to 10 linear feet horizontally to accommodate conflicts with underground utilities or field conditions. Adjustments needed outside of 10 linear feet will need to be approved by TxDOT.

If the Contractor chooses to combine multiple conduits into one bore, the Contractor will install a casing around the conduits in order to meet the requirements of the one inch in diameter

2 Replaced 9.4.12

allowable over cut. At no time will conduits that contain power and non-fiber optic communications be allowed to be combined into one bore.

During installation, and until substantial completion of the ITS conduit system, cap-off the communication and power conduits to prevent any conduit contamination (i.e. water, gravel, debris, etc.).

All ITS communication and power conduit to be installed to a minimum height of 4 inches above the finish elevation of ITS or Tolling equipment foundations.

Items 618, 620, 624 & 628. Conduit, Electrical Conductors, Ground Boxes & Electrical Services.

Conduit and conductor from the electrical service point to the utility company pole will be measured and paid for as the size and type of conduit and conductors indicated on the plans.

The plastic identification tags shall be as required on ED (2)-03.1.A.2.

Items 620. Electrical Conductors.

All electrical conductors shall conform to TxDOT material specification DMS 11040, Electrical Conductors.

A minimum of five feet of electrical conductor cable length will be included in each run, to provide adequate slack, at each ground box.

All insulated conductors shall be color coded in accordance with the National Electrical Code. The neutral conductor shall be white or marked with white tape. White shall not be used for any other conductor. The grounding conductor shall be bare or green. Green shall not be used for any other conductor.

All power conductors and communication cables will be color-coded consistently, or permanently labeled, between all connections and splices, to ensure immediate identification.

A plastic identification tag with the circuit identification stamped on the tag will be attached to the conductors for each circuit at all junction boxes and ground boxes. The circuit breakers for each circuit will be identified at the service box using plastic identification tags for each breaker. Each circuit will be labeled as shown on the plans.

A plastic identification tag with the voltage identification stamped on the tag will be attached to either side of all conduits where multiple power conduits are required in the same conduit run as required per NEC. Only power conductors of the same voltage shall be placed in the same conduit. The labels shall clearly identify the voltage of all power conductors located in that particular conduit.

Insulated parts and wire insulation will be insulated to withstand a minimum of 600 volts.

Lubricate cables or conductors, with a lubricant generally used for this purpose, when pulling cables or conductors through conduit.

All circuits will test clear of faults, grounds, and open circuits.

All ungrounded conductors will be continuous, without splices, from service panel point to equipment cabinet foundation. Equipment grounding conductor shall be bonded together in all ground boxes, as per National Electrical Code.

At ITS and Tolling equipment cabinet foundations or drill shaft foundations, coil 50 linear feet of electrical conductor cable slack in the nearest ground box for ITS/Tolling Integrator to make final connections to ITS/Tolling field cabinet hardware.

Bare tracer wires as noted in the plans for the multi-duct communication conduit shall be insulated, identified as a tracer wire with a tag, and remain isolated from the bonding system.

When required, connectors and terminations on cables shall be installed using ratchet type crimp tools.

Grounding rings, grounding rods, and ground wells comprise the grounding system for the ITS/Tolling equipment and are identified in the plans.

Contractor to construct the grounding system for each Tolling Maintenance Area and the project Satellite Building as identified in the plans. Contractor to test each grounding ring system with a ground-resistance tester and ensure the total resistance to ground across the system is 5 ohms or less. In the event the resistance to ground is greater than 5 ohms, the Contractor shall integrate additional grounding wells into the system to reach the 5 ohm requirement. Any additional grounding wells needed shall be subsidiary to Item 620.

Provide UL listed ground rods free of paint or other non-conductive coatings constructed of copper-clad steel or solid copper. Provide a minimum 10' ground rod with a minimum diameter of 15.9 mm (0.625") unless otherwise allowed by the UL listing.

Bury ground rods a minimum of 24" below the ground surface or to a depth deep enough to be in perpetually moist soil. Perpetually moist soil is defined as 20% moisture content or greater. Ground rods shall be no closer than 6' from other ground rods in a grounding system

When constructing the grounding system, bury the upper ends of the ground rods to the same depth within perpetually moist soil with moisture content of 20% or greater.

For below ground grounding conductors, provide #2 AWG or larger, bare, solid, tinned or un-tinned copper earthing conductors. Grounding conductors must be one continuous length without a splice or joint between ground rods and/or ground boxes.

2 Replaced 9.4.12

For above ground grounding conductors, provide #6 AWG or larger, tinned or un-tinned copper conductors. Grounding conductors used to bond multiple metallic objects used as a grounding bus must be #2 AWG or larger.

Electrical work shall be performed by personnel, per Item 7.15. See Item 7.15 "Electrical Requirements" of Special Provision to Item 7 for additional details.

Items 624. Ground Boxes.

Do not install any ground box in the flow line of a ditch.

Upon completion of wiring work within the ground boxes that are not set in roadway pavement, the contractor shall place a 6 inch diameter washer or metallic object (with a minimum surface area of 0.15 square feet) inside each proposed ground box. Payment for this work will not be paid for directly but will be considered subsidiary to Bid Item 624. This is to assist others in locating the ground boxes more readily in the future.

Unless otherwise shown on the plans or as directed, the location for all ground boxes is diagrammatic only. Stationing and offset information have been provided to identify a proposed location for equipment. The Contractor may adjust the location of ground boxes up to 10 linear feet horizontally to accommodate conflicts with underground utilities or field conditions. Adjustments needed outside of 10 linear feet will need to be approved by the Department.

All permanent ITS ground boxes located in natural ground (permeable areas) will be constructed with aprons unless approved by the Department.

Developer shall place all ground boxes to line and grade. Any ground boxes installed early as part of other work activities may dictate the need for the Contractor to adjust the ground box to line and grade.

All ground boxes shall be properly drained. If the Inspector determines a ground box is not properly drained the Contractor to reconstruct and/or relocate the drain hole and cushion (washed gravel or crushed stone), as required, to ensure efficient evacuation of fluids from the ground box.

Type "AS" or "DS" ground boxes will be used along the main duct bank and at all locations where it connects to either a cross road or lateral duct bank. Type "AS' and "DS" ground boxes are to be constructed as per the details contained in the plans. Type "D" ground boxes will be used along the lateral duct bank and adjacent to ITS/Tolling support structure or equipment foundation. Type "A" ground boxes will be used for all power conduit runs from the electrical service meter to each ITS/Tolling support structure or equipment foundation.

Use standard ground boxes from prequalified material producers list as shown on the Texas Department of Transportation (TxDOT) materials producers list. Category is "Roadway Illumination and Electrical Supplies."

For all Type D ground boxes, the end of all conduits within these ground boxes shall be between 10 and 15 inches measured from the bottom of the ground box cover as if installed. These measurements are in lieu of measurements shown on electrical Detail Sheet-ED(3).

The logo on the Type "AS" and "DS" ground box covers shall read: "SURVEILLANCE - DANGER HIGH VOLTAGE".

Items 620, 624, & 628. Electrical Conductors, Ground Boxes & Electrical Services.

Attach a plastic identification tag with the circuit identification stamped on the tag to the conductors for each circuit at all junction boxes and ground boxes. Identify the circuit breakers for each circuit at the service box using identification tags for each breaker. Label each circuit as shown on the illumination layouts in the plans. . The plastic identification tags shall be as required on ED(2)-03.1.A.2.

Item 628. Electrical Services.

The Engineer will make all arrangements for electrical service. Notify the Engineer, in writing, a minimum of 30 days in advance of the need for electrical service.

Contact Ronald Lewis with Oncor at (940) 255-0202 regarding the desired service location by street address.

All roadway illumination circuits are 240/480V/3 wire with the roadway luminaires operating at 480V. All roadway illumination circuit breakers are 2-pole.

All ITS/Tolling circuits are 120/240V/3 wire single phase from the electrical service to the ITS/Tolling device/cabinet. Each circuit will be provided with an ON/OFF disconnect switch to allow the ITS/Tolling Integrator to make final electrical connections inside the equipment cabinet.

The concrete riprap pad at electrical service points will not be paid for directly, but will be subsidiary to Item 628.

Place a decal stating "DANGER/HIGH VOLTAGE" on the door of the service assembly enclosure. The size of the decal and lettering shall be as outlined in the current TxDOT electrical detail (ED) standard sheets.

Remove the existing roadway illumination electrical service (mounted on timber post) located at the northwest corner of the Western Center Boulevard and IH 35W northbound frontage road intersection. Remove electrical conductors prior to the removal of the electrical service assembly and timber pole. Underground conduit shall be abandoned in place. The electrical service assembly and electrical conductors shall become the property of the Contractor.

Replaced 9.4.12

Removal of the electric service assembly shall be coordinated with the City of Fort Worth. Provide at least 72 hours of prior notification.

The Contractor will install a permanent plaque at the associated electrical service and corresponding ground boxes as per the requirements of the latest edition of the NEC. Example plaque wording for Electrical Service PS-35W-02 is provided below.

THIS ELECTRICAL SERVICE SHARES RACEWAYS WITH THE FOLLOWING ITS DEVICES:
ITS – CCTV #1 STA. 1405+75, CIRCUIT FROM PS-35W-02 TO CCTV
ITS – MVD #1 STA. 1411+83, CIRCUIT FROM PS-35W-02 TO MVD

CAUTION SHOULD BE TAKEN THAT MORE THAN ONE ENERGIZED SYSTEM IS CONTAINED IN THE SHARED CONDUIT SYSTEM.

The permanent plaques shall be subsidiary to the Electrical Services being installed.

Item 636-Aluminum Sign

Sign message and border design. Where a sign size or particular legend is not shown in the "2010 Standard Highway Sign Designs For Texas" publication, the contractor shall furnish the sign as detailed in the plans. Any sign not detailed in the plans but called for in the layout shall be as shown in the "Texas Manual On Uniform Traffic Control Devices For Streets And Highways" 2006 Edition. Where a sign size or particular legend is not shown in the "Standard Highway Sign Designs for Texas, latest edition, furnish the sign as detailed in the plans.

Shop drawings for all signs in this contract requiring fabrication are to be supplied to the Area Engineer for review and approval. Fabricate and install signs only after approval of the shop drawings by the Fort Worth District Traffic Operations section.

All overhead signs shall be Type "0" Aluminum.
Locations of sign panels on overhead structures are approximate. Check placement over applicable lanes in field prior to erecting.

Where sign panels mounted on an overhead sign support face the same direction of traffic, install the sign panels such that the bottom of each panel is in the same horizontal plane unless otherwise shown in the plans.

For replacement of overhead guide signs, provide new "L" brackets when required for new overhead sign panels of a different size from the original sign panel. An approximate quantity of additional steel that will be required for new "L" brackets is shown in the plans for the

2 Replaced 9·4·12

contractor's information. When the new sign is smaller, remove that portion of the old sign support bracket that extends above the new sign or the truss, whichever is tallest. Payment for all materials and labor for this work shall be considered subsidiary to Item 636.

When removing side mount aluminum signs under this Item, all materials removed shall become the property of the Texas Department of Transportation and shall be removed from the right-of-way and delivered to the Fort Worth District Warehouse.

Provide aluminum (Type G) for all large roadside signs.

For attachment of aluminum route markers on large roadside guide signs, provide screws with a minimum of ¾ inch length.

Item 644. Small Roadside Sign Supports and Assemblies

Supply shop drawings for all signs in this contract requiring fabrication to the Area Engineer for review and approval. Fabricate and install signs only after approval of the shop drawings by the Fort Worth District Traffic Operations section.

Where posts must be replaced, the lengths of the replacement posts for ground mounted signs are approximate. Verify the post lengths to meet the existing field conditions prior to ordering these materials. Conform to the minimum mounting heights shown in the plans. Labor and materials for this work shall be considered subsidiary to Items 644.

Installation and/or removal of signs located near any overhead or underground electrical lines shall be accomplished using established industry and utility safety practices. The contractor shall consult with the appropriate utility company prior to beginning such work.

For back-to-back sign mountings, adjust punch spacing for signs mounted back-to-back as required when different than shown on the standard detail sheets. Any required adjustment is considered subsidiary to this Item.

Removal of existing concrete foundations that are to be abandoned shall be 2 FT below finish grade.

Item 647. Large Roadside Sign Supports and Assemblies

Supply shop drawings for all signs in this contract requiring fabrication to the Area Engineer for review and approval. Fabricate and install signs only after approval of the shop drawings by the Fort Worth District Traffic Operations section.

Signs erected on supports constructed under Item 647 shall normally be erected at a minimum height of 7 feet from pavement to bottom of sign. Post lengths are selected on multiple post

supports to provide adequate clearance for mowing operations and may be more than 7 feet from pavement to the bottom of the sign.

Place hinges (post cuts) for large roadside ground mounted signs level with the bottom of the sign. Any supports that need to be replaced due to the hinges (post cuts) in the wrong location, damaged or corroded shall be considered subsidiary to Item 647.

Where existing guide signs have been removed and new panels of different sizes are to be placed at the same location, utilize the existing panel supports unless otherwise shown in the plans. When replacing new panels on existing large roadside guide sign supports, provide the hinge for the support as shown on the plans. All materials and work shall be considered subsidiary to Item 647.

Before installing new signs on existing supports, plumb the existing sign posts using shims if necessary.

Provide new sign panel and mounting hardware when replacing existing large roadside signs. The new signs shall be installed as noted on the "Summary of Large Signs" sheet. Some signs shall be replaced with a new sign panel of a different size and will require shimming of the existing posts to make plumb.

Removal of existing concrete foundations that are to be abandoned shall be 2 FT below finish grade.

Items 647 and 650. Large Roadside Sign Supports and Assemblies and Overhead Sign Supports

Strict adherence to the dimensions shown in the sign support detail sheets will not excuse the contractor from the responsibility of checking dimensions. Prior to construction, bring to the attention of the engineer any detail which conflicts with the standard plan sheets unless a note is placed adjacent to the detail to indicate an intentional deviation from the standard plan sheets.

Erect sign structures according to the station number or distance tie shown on the plans sheets except that the engineer may shift a sign in order to secure a more desirable location.

Item 650. Overhead Sign Supports

Dimensions (truss length, tower heights, and heights of concrete drill shaft above ground) for overhead sign bridge supports are based upon preliminary survey data to form equal basis for bidding purposes. Verify all dimensions prior to fabrication.

Replaced 9.4.12

Check dimensions shown in the sign support detail sheets and bring any detail conflicts with the standard plan sheets to the attention of the engineer prior to construction, unless a note is placed adjacent to the detail to indicate an intentional deviation from the standard plan sheets.

Erect sign supports according to the station number or distance tie shown on the plan and profile sheets except that the engineer may shift a sign in order to secure a more desirable location. Stake all sign locations. No changes in these locations shall be made without prior approval of the engineer.

Erect overhead signs providing a minimum clearance of 21 Ft. 0 In. from the bottom of the sign support to the highest point of pavement under the sign walkway.

Tower lacing shall lie within the minimum horizontal cross-sectional area through the tower legs. Use design wind speed of 70 mph.

Prior to staking foundations and fabrication of each toll gantry truss, Contractor to coordinate with Toll Integrator to verify spacing between gantry structures

Contractor shall install Single Line DMS (SDMS), Toll Gantry, and ATRDMS overhead support structures as part of this project. Overhead support structures for DMS will be the responsibility of the ITS/Tolling Integrator.

The locations shown for overhead support structures may need to be adjusted to fit field conditions. Dimensions (truss length, tower heights, and heights of concrete drill shaft above ground) for overhead sign bridge supports are based upon preliminary survey data and cross-section information. The Contractor is to verify all dimensions in the field prior to fabrication.

Check dimensions shown in the overhead support detail sheets and bring any detail conflicts with the standard plan sheets to the attention of the Engineer prior to construction, unless a note is placed adjacent to the detail to indicate an intentional deviation from the standard plan sheets.

Erect overhead supports according to the station number on the plan and profile sheets.

For SDMS overhead support structures, erect the structure so that minimum clearance from the highest point of pavement to the SDMS unit is 21 ft. 0 in.

For Toll Gantry overhead support structures, erect the structure so that the minimum clearance from the highest point of pavement to the toll reader units is 18 ft. 0 in.

All towers and trusses will be matched and marked for erection by the fabricator.
Tower lacing shall lie within the minimum horizontal cross-sectional area through the tower legs

ITEM 652. Highway Sign Lighting Fixtures

Prior to removing overhead sign lighting fixtures, contact J.D. Gore of the Fort Worth District Signal Shop at 817-370-6942 to coordinate removal and power turn off at the power pole. All materials removed shall become the property of the contractor.

Item 656: Foundations for Traffic Control Devices

Locations of traffic signal foundations shown on the plans are for diagrammatic purposes **only** and may be varied to meet local conditions, subject to approval. Stake locations and have them approved by the inspector before installation of foundations. This will ensure that all luminaires and mast arms are clear of all overhead lines and underground utilities **before** drilling begins. The signal inspector together with the contractor will calculate the vertical signal head clearance before placing any traffic signal pole foundation.

For the signal controllers furnished by TxDOT, anchor bolts for the controller foundations will be supplied.

Install traffic signal controller foundation (City of Fort Worth type) only if called for in the plans or if directed.

Item 662. Work Zone Pavement Markings

Place short term pavement markings when directed by the engineer.

Place white short term pavement markings to separate traffic in the same direction. Place yellow short term pavement markings to separate traffic in opposite directions.

Adhesive for raised pavement markers shall be bituminous material hot applied if placed on temporary asphalt surfaces and thermoplastic adhesive when placed on concrete surfaces.

Item 666. Reflectorized Pavement Markings

Provide dotting as guides to mark the lateral location of pavement markings and raised pavement markers for centerline, lane line and edge line for permanent stripe placement. Mark the proposed locations for no passing markings and gore markings for approval by the Engineer prior to placement. For pavement overlays, reference and remark existing no passing pavement markings and gore area markings. Dot spacing shall be between 15 and 25 feet. Spray paint shall not be used for dotting.

Install all pavement markings prior to placing traffic on any roadway section, unless permission to deviate is granted by the Engineer.

Replaced 9-4-12

Acceptance of the pavement markings will be based upon the mil thickness specified in Item 666 for the various surface types. Mil thickness of thermoplastic paint shall be made to the top surface of the thermoplastic material not to the top of partially immersed external beads.

For surface treatment projects, leave the final course in place for two (2) days and broom the roadway directly ahead of the striping machine prior to placing standard pavement markings.

Item 678. Pavement Surface Preparation for Markings

Blast clean pavement prior to placement of permanent pavement markings and raised pavement markers and sweep pavement prior to placement of Work Zone Pavement Markings (Item 662).

Item 680: Installation of Highway Traffic Signals

This project shall consist of the installation of all of the materials necessary for complete signal systems as follows:

1. Provide submittal literature for all traffic signal equipment before installation.
   - Approval by the Engineer does not relieve the Contractor of his responsibilities to meet the requirements of the specifications and plans.
2. Furnish, and install all required materials, incidentals and any equipment necessary to make a **fully operational** traffic signal. The proposed controller shall be compatible with the existing/proposed system(s) in the area.
3. Provide vibration dampers for mast arms 28 feet long and longer. Use dampers 18"x48" for arms up to 48 feet long, and 16"x 66" for longer mast arms. Install using Astro-sign Brac, Signfix aluminum channel, or equal, at a maximum of 3 feet from the end of the mast arm.
4. Provide a qualified technician on the project site to place the traffic signals in full operation.
5. Where work requires the removal of power from the controller and cabinet assembly, erect temporary stop sign panels. Remove the stop sign panels after the traffic signals are in operation.
6. Install the City of Fort Worth supplied controller and cabinet assembly.
7. The locations shown on the plans for controller foundations, conduit and other items may be adjusted to better fit field conditions as approved, due to conflicts with utilities.
8. For Contractor supplied material deliver the cabinet, controller, accessories, and three complete sets of signal construction plans to the TxDOT Fort Worth District Signal Shop, 2501 SW Loop 820 at McCart Street, Fort Worth for testing. Notify the Signal Shop at 817-370-6505 two working days prior to delivery of the cabinet.

9. **VIVDS Zones Setup:** The signal technicians from the City of Fort Worth Signal Shop are responsible for the set-up of video imaging vehicle detection. Contact Mr. Ken Brock with the City of Fort Worth Signal Shop at 817-392-8775 to coordinate a suitable meeting time to verify proper camera locations in accordance with the VDZ(1)-05(FTW) sheet. At this time, the City of Fort Worth Signal Shop begins their one-week inspection. Any discrepancies they find shall be corrected and/or repaired. Upon the satisfactory completion of repairs or corrections, the signals shall operate in a flashing mode for two or three days prior to the beginning of the test period for full signal operation.

   A single camera, placed at the proper mounting height with the proper lens, must be able to monitor up to and including five (5) traffic lanes simultaneously. Detection accuracy must include the presence of any vehicle in the defined detection zone regardless of the lane, which the vehicle is occupying. Occlusion produced by vehicles in the same or adjacent lanes must not be considered a failure of the VIVDS processor unit, but a limitation of the camera placement. A minimum of 95% detection accuracy must be enforced for the entire design field of view on a lane by lane and on a time period basis.

   The video set-up will be completed by the City of Fort Worth Signal Shop, at which time the video from each camera must show vehicle detections for all zones. Live video with the detection overlaid is required for field verification of the system. The City of Fort Worth Signal Shop will then begin to record the video approaches as shown in the plans. Upon completion of the field verification the recording equipment will be turned in to the City of Fort Worth Signal Shop and will become the property of the City.

   The City of Fort Worth Signal Shop will review the 24 continuous hours of recorded video of all installed intersection cameras at the beginning of the 30-day test period for verification of proper camera placement, field of view, focus, detection zone placement, processor setup, and operation.

   Equipment failure, either camera or VIVDS processor unit, must result in a recall operation on the whole signalized intersection.

10. The City of Fort Worth will not assume responsibility for the maintenance of the traffic signals until the project is completed and accepted.

11. Wire the signal installation to operate in accordance with phase diagrams in these plans. Timing and phasing will be changed and maintained by the City of Fort Worth. A copy of all revisions to the original timing and phasing plans will be delivered to the Fort Worth Traffic Engineering group and one copy is to stay in the controller cabinet at the completion of the project.

12. **Place the traffic signal into operation after all required striping is complete and all conflicting signing is removed.**

13. **Project Inspection:** For electrical project inspection, the Area Office and Chief Inspector should contact the TEIM office and the Fort Worth District Signal Shop in advance of needed inspections. At the time of the final electrical inspection, the TEIM office will create

Replaced 9-4-12

a punch list of discrepancies to be corrected and/or repaired before signal is put into flash mode. Upon the satisfactory completion of repairs or corrections, the signals shall operate in a flashing mode for two or three days prior to the beginning of the test period for full signal operation.

14. **Signal Turn-On:** Notify TEIM at 817-370-6745, The Traffic Engineering Group at 817-370-6873, the Fort Worth District Signal Shop and Mr. Ken Brock with the City of Fort Worth Signal Shop approximately 48 hours in advance of the signal turn on. Signal technicians from the Fort Worth District Signal Shop and City of Fort Worth must be present when the signals are placed in full operation. Unless otherwise directed, place the signal in full operation between 9:00 A.M. - 12:00 (NOON) on Tuesdays, or Wednesdays only.

15. **Test Period for Signals:** The signals shall operate continuously for a minimum of 30 calendar days in a satisfactory manner. Equipment failures during these 30 days will cause the test period to start over.

16. During the thirty-day test period, the City of Fort Worth Signal Shop will be the First Responders to all trouble calls. They will, in turn contact the Contractor. Provide qualified personnel to respond to these and all trouble calls. Repair and diagnose any malfunctions to signal equipment supplied for the project. Provide a local telephone number, not subject to frequent changes and available to receive calls on a 24-hour basis. Respond to reported calls within a reasonable travel time, (i.e. from a Dallas address), but not more than 2 hours maximum. Make appropriate repairs within 24 hours. Place a logbook in each controller cabinet and keep a record of each trouble call reported. Notify the Engineer of each trouble call. The error log in the conflict monitor shall not be cleared during the thirty-day test period without approval. If it is necessary to replace equipment, such as a controller, in order to return the signals to normal operation, the City of Fort Worth will replace the equipment with loaned equipment until the original equipment is repaired and then replaced.

17. City of Fort Worth will remove and relocate Red Light Running camera equipment prior to beginning of construction. Contractor to coordinate with City of Fort Worth and provide 2 week notice prior to start of construction.

Item 681: Temporary Traffic Signals

Install temporary traffic signals to operate during construction.

1. Furnish and install miscellaneous items essential for complete temporary signal installation as shown in the plans and specifications.

2. Furnish and mount the temporary polycarbonate signal heads with LED's vertically, unless otherwise shown on the plans.

Responsibility for the setting and maintaining the signal timing and phasing will be with the Contractor.

Repair any malfunctions to signal equipment supplied for the project. Provide a local telephone number, not subject to frequent changes and available to receive calls on a 24-hour basis. Respond to reported calls within a reasonable travel time, (i.e. from a Dallas address), but not more than 2 hours maximum. Make appropriate repairs within 24 hours. Place a logbook in each controller cabinet and keep a record of each trouble call reported. Notify the Construction Engineer of each trouble call. The error log in the conflict monitor shall not be cleared during the thirty-day test period without approval.

If it is necessary to replace equipment, such as a controller, in order to return the signals to normal operation, TxDOT will replace the equipment with loaned equipment until the original equipment is repaired and then replaced.

Item 682: Vehicle and Pedestrian Signal Heads

Provide all signal heads from the same manufacturer.

Provide all LED traffic signal lamp units, as well as the various components of the signal heads to be installed within this project.

Traffic signal heads shall be yellow aluminum with black aluminum back plates. Signal heads mounted on poles and mast arms shall be level and plumb and aimed as directed. Cover all signal faces until placed in operation.

The internal arrangements of each louver shall consist of five vanes with a 7-degree cut-off right of center. All louvers shall have a flat black finish on the inside surfaces. Each louver shall be of suitable weight and size to fit inside the full circle visor furnished for the intended signal section.

Item 684: Traffic Signal Cables

Identify each cable as shown on the plans (cable 1, etc.) with pre-numbered identification tags of plastic, tape or marking labels at each signal head, ground box, terminal block, pole base and controller.

All cables shall be continuous without splices from terminal point to terminal point or as directed or approved. All proposed signal cable and number of conductors required shall be as shown on the plans. Terminate **all** electrical conductors from the controller at the termination block in the signal pole hand hole whether in use or not.

Provide an extra 10' for each cable terminating in the controller cabinet. All cables shall be continuous without splices from terminal point to terminal point. Provide the number of conductors as shown on the plans.

2 Replaced 9·9·12

Item 686: Traffic Signal Pole Assemblies (Steel)

Provide all signal poles from the same manufacturer.

For poles where luminaires are to be installed, provide 10 amp time delay fuses.

Use materials from the prequalified material producer lists as shown on the Texas Department of Transportation (TxDOT) material producer list (MPL). Category is "Roadway Illumination and Electrical Supplies."

Items 730, 734, 738 and 764. Roadside Mowing, Litter Removal, Cleaning and Sweeping Highways and Pump Station and Drainage System Cleaning

Mowing height shall be approximately 7 inches.

For this project, project maintenance shall be done at the following rates:

Mowing	4 cycles/year
Litter Pickup	1 cycle/month
Sweeping	1 cycle/month

These rates shall be adhered to unless permission to deviate is granted in writing by the Engineer.

Drain inlet cleaning and strom sewer cleaning to be used as directed.

Item 6007: Removing Traffic Signals

Salvaging traffic signals will be measured as each traffic signal location where salvage is authorized. The traffic signal controller/controllers and related equipment shall remain the property of City of Fort Worth and shall be delivered to the Signal Shop.

Item 6008-Remove Overhead Sign Panels

Under this item, "remove overhead sign panels", all materials removed shall become the property of the Texas Department Of Transportation and shall be removed from the right-of-way and delivered to the Fort Worth District Warehouse.

Item 6266: Vehicle Imaging Video Detection System

Furnish, install, and make **fully operational** the Vehicle Imaging Video Detection System (VIVDS). This includes all cameras, mounting hardware, cable, field set up devices, black and white monitor, detection processor, connectors, and surge suppression panel for AV & Video.

Contact Mr. Ken Brock with the City of Fort Worth Signal Shop at 817-392-8775 to coordinate a suitable meeting time to verify proper camera locations in accordance with the plan sheets and the VDZ(1)-05(FTW) sheet.

Install the VIVDS cable, in a continuous run, from the camera to the traffic signal controller. Connect the VIVDS camera to the controller, focus and set up the video detection zones as shown on the VDZ(1)-05(FTW) sheet and perform any other work necessary to get the system fully operational.

The video set-up will be verified by the City of Fort Worth Signal Shop, at which time the video from each camera must show vehicle detections for all zones. Live video with the detection overlaid is required for field verification of the system. The City of Fort Worth Signal Shop will then begin to record the video approaches as shown in the plans. Upon completion of the field verification the recording equipment will be turned in to the City of Fort Worth Signal Shop and will become the property of the City.

VIVDS Cable: All connection cables must be continuous from the equipment cabinet to the camera. No splices of any type will be permitted. For each cable terminating at the controller cabinet, an extra 10-foot length will be provided for final installation into the controller.

Item 6834. Portable Changeable Message Signs

All portable changeable message signs and arrow panels are to be provided with a photoelectric device to allow for automatic dimming of operations to approximately 50% of their normal brightness when ambient light drops to approximately five footcandles, and then increase back again for daytime operations.

(Number) electronic portable changeable message sign unit(s) will be required. Individual or collective use of signs will be required by Engineer when deemed necessary to supplement the traffic control plan.

Each sign shall be programmed in its permanent memory the following 15 messages:

1. Exit Closed Ahead
2. Use Other Routes
3. Right Lane
4. Left Lane
5. Closed Ahead
6. Two Lane
7. Detour Ahead
8. Thru Traffic
9. Prepare To Stop
10. Merging Traffic
11. Expect 15 Minute Delay

12. Max Speed ** MPH
13. Merge Right
14. Merge Left
15. No Exit Next ** Miles

Item 8260: LED Pedestrian Signal Module

Furnish and install in aluminum housing, LED "Walking Person," and "Hand" icon pedestrian signal modules with countdown feature.

Housing for LED pedestrian signal module shall be paid for under Item 682 "Vehicle and Pedestrian Signal Heads."

Item 8835: Accessible Pedestrian Signal Units

At intersections where a minimum of 10 ft. spacing between adjacent accessible pedestrian signal units is not possible, each accessible pedestrian pushbutton must be provided with the following features:

- A pushbutton locator tone,
- A tactile arrow,
- A speech walk message for the walking person indication and
- A speech pushbutton information message.

Item 8898-2002: Remove and Relocate DMS Assembly.

Contractor to remove existing 54" drill shaft to a minimum of 2 feet below the ground surface. Time and materials associated with the removal of this foundation will be subsidiary to this item.

Item 8898-2001: Remove and Relocate CCTV Assembly.

Contractor to remove existing 36" drill shaft to a minimum of 2 feet below the ground surface. Time and materials associated with the removal of this foundation will be subsidiary to this item

Item 2053: City of Fort Worth Water and Wastewater Utilities

The Engineer will coordinate with the City of Fort Worth on all issues related to the City of Fort Worth Water and Wastewater utilities. The Contractor has the option of requesting a list of pre-qualified Water and Wastewater Contractors by contacting John Kasavich with the City of Fort Worth Water Department at (817) 392-8480, or by email at john.kasavich@fortworthtexas.gov.

2 Replaced 9-4-12

ESTIMATE SUMMARY

						PROJECT IM 0355(151)		PROJECT IM 0355(151)		ALT.	ITEM-CODE			DESCRIPTION	UNIT	TOTAL	
						CONTROL 0014-16-255		CONTROL 0014-16-255									
						IH 35W BRIDGE ITEMS		IH 35W ROADWAY ITEMS									
EST.	FINAL	EST.	FINAL	EST.	FINAL	EST.	FINAL	EST.	FINAL		ITEM NO	DESC CODE	SP NO			EST.	FINAL
								234.000			100	2002	002	PREPARING ROW	STA	234.000	
						3300.000					104	2009		REMOVING CONC (RIPRAP)	SY	3300.000	
								999999.000			110	2001		EXCAVATION (ROADWAY)	CY	999999.000	
								3727.000			110	2002		EXCAVATION (CHANNEL)	CY	3727.000	
								335406.000			132	2006	007	EMBANKMENT (FINAL) (DENS CONT) (TY C)	CY	335406.000	
								223983.000			132	2025	007	EMBANKMENT (FINAL) (DENS CONT) (TY C1)	CY	223983.000	
								603923.000			160	2003		FURNISHING AND PLACING TOPSOIL (4")	SY	603923.000	
								5904.000			162	2002		BLOCK SODDING	SY	5904.000	
								603923.000			164	2007	002	BROADCAST SEED (PERM) (URBAN) (CLAY)	SY	603923.000	
								301965.000			164	2029	002	CELL FBR MLCH SEED(TEMP) (WARM)	SY	301965.000	
								301965.000			164	2031	002	CELL FBR MLCH SEED(TEMP) (COOL)	SY	301965.000	
								21138.000			168	2001		VEGETATIVE WATERING	MG	21138.000	
								41485.000			169	2003	002	SOIL RETENTION BLANKETS (CL 1) (TY C)	SY	41485.000	
								7794.000			169	2006	002	SOIL RETENTION BLANKETS (CL 2) (TY F)	SY	7794.000	
								115454.000			247	2056	033	FL BS (CMP IN PLC) (TY D GR 4) (FNAL POS)	CY	115454.000	
								5283.000			247	2060	033	FL BS (CMP IN PLC) (TY E GR 4) (FNAL POS)	CY	5283.000	
								814.000			247	2064	033	FL BS (CMP IN PLC) (TY A GR 4) (6")	SY	814.000	
								7560.000			260	2006	003	LIME TRT (EXST MATL) (6")	SY	7560.000	
								148494.000			260	2009	003	LIME TRT (EXST MATL) (10")	SY	148494.000	
								47181.000			260	2016	003	LIME (HYD, COM, OR QK(SLURRY))	TON	47181.000	
								277025.000			260	2022	003	LIME TRT (EXIST MATL) (18")	SY	277025.000	
								169258.000			260	2023	003	LIME TRT (EXIST MATL) (36")	SY	169258.000	
								109664.000			260	2026	003	LIME TRT (EXIST MATL) (24")	SY	109664.000	
								21909.000			260	2028	003	LIME TRT (EXST MATL) (8")	SY	21909.000	
								330.000			275	2001	003	CEMENT	TON	330.000	
								5194.000			275	2018	003	CEMENT TREAT (NEW BASE) (36")	SY	5194.000	
								130773.000			305	2008		SALV, HAUL & STKPL RCL APH PV (0"TO 4")	SY	130773.000	
								268614.000			305	2022		SALV, HAUL & STKPL RCL APH PV (4")	SY	268614.000	
								85871.000			305	2055		SALV, HAUL & STKPL RCL APH PAV (4"-14")	SY	85871.000	
								155749.000			310	2026		PRIME COAT (EC-30)	GAL	155749.000	
								36859.000			346	2030	003	STONE-MTRX-ASPH SMA-F SAC-B PG76-22	TON	36859.000	
								26811.000			360	2001	003	CONC PVMT (CONT REINF-CRCP) (8")	SY	26811.000	
								1014.000			360	2003	003	CONC PVMT (CONT REINF-CRCP) (10")	SY	1014.000	
								1781.000			360	2006	003	CONC PVMT (CONT REINF-CRCP) (13")	SY	1781.000	
								1387.000			360	2044	003	CONC PVMT (CONT REINF-CRCP) (HES) (8")	SY	1387.000	
								983.000			360	2065	003	CONC PVMT (CONT REINF - CRCP) (7")	SY	983.000	
						1647.000		3258.000			400	2005		CEM STABIL BKFL	CY	4905.000	
								1578.000			401	2001		FLOWABLE BACKFILL	CY	1578.000	
								36621.000			402	2001		TRENCH EXCAVATION PROTECTION	LF	36621.000	
						21829.000		217625.000			403	2001		TEMPORARY SPL SHORING	SF	239454.000	
						137.000					416	2001	001	DRILL SHAFT (18 IN)	LF	137.000	
								1151.000			416	2002	001	DRILL SHAFT (24 IN)	LF	1151.000	
								648.000			416	2003	001	DRILL SHAFT (30 IN)	LF	648.000	
						8627.000		2753.000			416	2004	001	DRILL SHAFT (36 IN)	LF	11380.000	
						144.000		1386.000			416	2005	001	DRILL SHAFT (42 IN)	LF	1530.000	
						932.000		76.000			416	2006	001	DRILL SHAFT (48 IN)	LF	1008.000	
								41.000			416	2007	001	DRILL SHAFT (54 IN)	LF	41.000	
								197.000			416	2018	001	DRILL SHAFT (SIGN MTS) (24 IN)	LF	197.000	
								892.000			416	2019	001	DRILL SHAFT (SIGN MTS) (30 IN)	LF	892.000	
								406.000			416	2020	001	DRILL SHAFT (SIGN MTS) (36 IN)	LF	406.000	

2 Replaced 9-4-12

ESTIMATE & QUANTITY SHEET

STATE DIST. NO.	COUNTY	PROJECT NO.	SHEET NO.
02	TARRANT	IM 0355(151)	58

ESTIMATE SUMMARY

						PROJECT IM 0355(151)		PROJECT IM 0355(151)		ALT.	ITEM-CODE			DESCRIPTION	UNIT	TOTAL	
						CONTROL 0014-16-255		CONTROL 0014-16-255									
						IH 35W BRIDGE ITEMS		IH 35W ROADWAY ITEMS									
EST.	FINAL	EST.	FINAL	EST.	FINAL	EST.	FINAL	EST.	FINAL		ITEM NO	DESC CODE	SP NO			EST.	FINAL
								268.000			416	2021	001	DRILL SHAFT (SIGN MTS) (42 IN)	LF	268.000	
								155.000			416	2022	001	DRILL SHAFT (SIGN MTS) (48 IN)	LF	155.000	
								286.000			416	2023	001	DRILL SHAFT (SIGN MTS) (54 IN)	LF	286.000	
								692.000			416	2026	001	DRILL SHAFT (HIGH MAST POLE) (60 IN)	LF	692.000	
								48.000			416	2029	001	DRILL SHAFT (RDWY ILL POLE) (30 IN)	LF	48.000	
								23.000			416	2031	001	DRILL SHAFT (TRF SIG POLE) (30 IN)	LF	23.000	
								93.000			416	2032	001	DRILL SHAFT (TRF SIG POLE) (36 IN)	LF	93.000	
								464.000			420	2006	002	CL C CONC (RAIL FOUNDATION)	CY	464.000	
						1833.700					420	2018	002	CL C CONC (FOOTING) (MASS PLACEMENT)	CY	1833.700	
						485.100					420	2041	002	CL C CONC (ABUT) (HPC)	CY	485.100	
						1625.500					420	2042	002	CL C CONC (BENT) (HPC)	CY	1625.500	
								48.000			420	2091	002	CL B CONC (MISC)	CY	48.000	
						178.000					420	2092	002	CL C CONC (CAP) (MASS PLACEMENT) (HPC)	CY	178.000	
						448.100					420	2093	002	CL C CONC (COLUMN) (MASS PLACE) (HPC)	CY	448.100	
						113.400					420	2223	002	CL C CONC (COLUMN) (HPC)	CY	113.400	
						730.000					420	2256	002	CL S CONC (APPR SLAB) (HPC)	CY	730.000	
						56.200					420	2269	002	CL C CONC (CAP) (HPC)	CY	56.200	
						456.500					420	2278	002	CL F CONC (CAP) (MASS PLACEMENT) (HPC)	CY	456.500	
						215.700					420	2292	002	CL S CONC (BRIDGE SDWLK) (HPC)	CY	215.700	
						705.600					420	2302	002	CL F CONC (BENT) (MASS PLACEMENT) (HPC)	CY	705.600	
						219907.000					422	2003		REINF CONC SLAB (HPC) (CL S)	SF	219907.000	
						64679.000					422	2008		REINF CONC SLAB (EXT SLAB) (HPC) (CL S)	SF	64679.000	
								155795.000			423	2001		RETAINING WALL (MSE)	SF	155795.000	
								5915.000			423	2009		RETAINING WALL (SOIL NAILED) (FACIA)	SF	5915.000	
								8120.000			423	2011		RETAINING WALL (DRILL SHAFT) (FACIA)	SF	8120.000	
								9712.000			423	2012		RETAINING WALL (CAST-IN-PLACE)	SF	9712.000	
						4774.780					425	2066	001	PRESTR CONC GIRDER (TX40)	LF	4774.780	
						8871.410					425	2067	001	PRESTR CONC GIRDER (TX46)	LF	8871.410	
						17179.400					425	2068	001	PRESTR CONC GIRDER (TX54)	LF	17179.400	
						747.000					426	2001		POST-TENSIONING (GROUTED)	MKF	747.000	
						38468.000					428	2002	001	CONC SURF TREAT (CLASS II)	SY	38468.000	
						154.000					429	2007	008	CNC STR REP (HORIZONTAL)	SF	154.000	
						220.000					429	2008	008	CNC STR REP (VERTICAL OR OVERHEAD)	SF	220.000	
						48.000					429	2010	008	CNC STR REP (BRDG DECK) (FULL DEPTH)	SF	48.000	
						245.900					430	2126		CL C CONC FOR EXT STR (ABUT) (HPC)	CY	245.900	
								12.000			430	2135		CL C CONC FOR EXT STRU (CULV) (2-6'X3')	LF	12.000	
						520.000					430	2232		CL S CONC FOR EXT STR (APPR SLAB) (HPC)	CY	520.000	
						911.000		81.000			432	2001		RIPRAP (CONC) (4 IN)	CY	992.000	
						289.000		4120.000			432	2002		RIPRAP (CONC) (5 IN)	CY	4409.000	
								1888.000			432	2023		RIPRAP (STONE PROTECTION) (24 IN)	CY	1888.000	
								1374.000			432	2040		RIPRAP (MOW STRIP) (5 IN)	CY	1374.000	
								147.000			432	2048		RIPRAP (CONC) (FLUME)	CY	147.000	
								3.000			432	2066		RIPRAP (CONC) (CL B)	CY	3.000	
						4.000					434	2040	003	ELASTOMERIC BEAR (E9)	EA	4.000	
						8.000					434	2041	003	ELASTOMERIC BEAR (F9)	EA	8.000	
						1.000					434	2049	003	ELASTOMERIC BEAR (EE5)	EA	1.000	
						11.000					434	2050	003	ELASTOMERIC BEAR (EE6)	EA	11.000	
						1.000					434	2053	003	ELASTOMERIC BEAR (EE9)	EA	1.000	
						1.000					434	2057	003	ELASTOMERIC BEAR (EF5)	EA	1.000	
						3.000					434	2058	003	ELASTOMERIC BEAR (EF6)	EA	3.000	

2 Replaced 9-4-12

ESTIMATE & QUANTITY SHEET

STATE DIST. NO.	COUNTY	PROJECT NO.	SHEET NO.
02	TARRANT	IM 0355(151)	S8A

ESTIMATE SUMMARY

						PROJECT IM 0355(151)		PROJECT IM 0355(151)		ALT.	ITEM-CODE			DESCRIPTION	UNIT	TOTAL	
						CONTROL 0014-16-255		CONTROL 0014-16-255									
						IH 35W BRIDGE ITEMS		IH 35W ROADWAY ITEMS									
EST.	FINAL	EST.	FINAL	EST.	FINAL	EST.	FINAL	EST.	FINAL		ITEM NO	DESC CODE	SP NO			EST.	FINAL
						1.000					434	2061	003	ELASTOMERIC BEAR (EF9)	EA	1.000	
						5.000					434	2066	003	ELASTOMERIC BEAR (E5)	EA	5.000	
						5.000					434	2071	003	ELASTOMERIC BEAR (F5)	EA	5.000	
						4.000					434	2073	003	ELASTOMERIC BEAR (F8)	EA	4.000	
						10.000					434	2077	003	SLIDING ELASTOMERIC BEAR (ES 4)	EA	10.000	
						3.000					434	2087	003	ELASTOMERIC BEAR (EE4)	EA	3.000	
						3.000					434	2088	003	ELASTOMERIC BEAR (EF4)	EA	3.000	
						16.000					434	2118	003	ELASTOMERIC BEAR (ES5)	EA	16.000	
						1094.000					438	2002		CLEAN AND SEAL EXIST JOINTS	LF	1094.000	
						549.000					438	2006		CLEAN AND SEAL CRACKS	LF	549.000	
						4024869.000					442	2002	016	STR STL (PLATE GIRDER)	LB	4024869.000	
						897.000					442	2047	016	STRUCTURAL STEEL (MISCELLANEOUS BRIDGE)	LB	897.000	
						3386.000					442	2048	016	STRUCTURAL STEEL (MISC NON-BRIDGE)	LB	3386.000	
								17550.000			450	2013	001	RAIL (TY SSTR)	LF	17550.000	
								147.000			450	2026	001	RAIL (TY PR2)	LF	147.000	
						12668.500					450	2102	001	RAIL (TYPE SSTR) (HPC)	LF	12668.500	
						1325.000					450	2635	001	RAIL (TY C402) (MOD) (HPC)	LF	1325.000	
						1286.300					450	2636	001	RAIL (TY T401) (HPC)	LF	1286.300	
						1751.000					454	2001		SEALED EXPANSION JOINT (4 IN) (SEJ-A)	LF	1751.000	
						27.000					454	2009		SEALED EXPANSION JOINT (5 IN) (SEJ-A)	LF	27.000	
								46.000			462	2002	015	CONC BOX CULV (3 FT X 3 FT)	LF	46.000	
								351.000			462	2003	015	CONC BOX CULV (4 FT X 2 FT)	LF	351.000	
								1086.000			462	2004	015	CONC BOX CULV (4 FT X 3 FT)	LF	1086.000	
								319.000			462	2015	015	CONC BOX CULV (7 FT X 4 FT)	LF	319.000	
								831.000			462	2016	015	CONC BOX CULV (7 FT X 5 FT)	LF	831.000	
								6904.000			462	2020	015	CONC BOX CULV (8 FT X 5 FT)	LF	6904.000	
								19350.000			464	2003	006	RC PIPE (CL III) (18 IN)	LF	19350.000	
								14414.000			464	2005	006	RC PIPE (CL III) (24 IN)	LF	14414.000	
								10137.000			464	2007	006	RC PIPE (CL III) (30 IN)	LF	10137.000	
								2217.000			464	2009	006	RC PIPE (CL III) (36 IN)	LF	2217.000	
								1823.000			464	2010	006	RC PIPE (CL III) (42 IN)	LF	1823.000	
								258.000			464	2011	006	RC PIPE (CL III) (48 IN)	LF	258.000	
								776.000			464	2012	006	RC PIPE (CL III) (54 IN)	LF	776.000	
								75.000			464	2013	006	RC PIPE (CL III) (60 IN)	LF	75.000	
								48.000			464	2014	006	RC PIPE (CL III) (66 IN)	LF	48.000	
								389.000			464	2035	006	RC PIPE (CL V) (18 IN)	LF	389.000	
								32.000			465	2005	001	MANH (COMPL) (TY M)	EA	32.000	
								2.000			465	2030	001	INLET (COMPL) (CURB) (TY 1) (5' X 4')	EA	2.000	
								34.000			465	2032	001	INLET (COMPL) (CURB) (TY 1) (10' X 3')	EA	34.000	
								17.000			465	2035	001	INLET (COMPL) (CURB) (TY 1) (15' X 3')	EA	17.000	
								4.000			465	2036	001	INLET (COMPL) (CURB) (TY 1) (15' X 4')	EA	4.000	
								6.000			465	2038	001	INLET (COMPL) (CURB) (TY 1) (20' X 3')	EA	6.000	
								4.000			465	2039	001	INLET (COMPL) (CURB) (TY 1) (20' X 4')	EA	4.000	
								105.000			465	2077	001	INLET (COMPL) (DROP) (TY 1)	EA	105.000	
								54.000			465	2081	001	INLET (COMPL) (GRATE) (TY 1)	EA	54.000	
								56.000			465	2084	001	INLET (COMPL) (GRATE) (TY 2-C)	EA	56.000	
								1.000			465	2089	001	MANH (COMPL) (JUNCT BOX) (TY 1)	EA	1.000	
								36.000			465	2092	001	MANH (COMPL) (TY 1)	EA	36.000	
								8.000			465	2291	001	INLET (COMPL) CI (1)-02 FW (10'X4')	EA	8.000	
								9.000			465	2292	001	INLET (COMPL) CI (1)-02 FW (5'X3')	EA	9.000	

2 Replaced 9.4.12

ESTIMATE & QUANTITY SHEET

STATE DIST. NO.	COUNTY	PROJECT NO.	SHEET NO.
02	TARRANT	IM 0355(151)	S8B

ESTIMATE SUMMARY

						PROJECT IM 0355(151)		PROJECT IM 0355(151)		ALT.	ITEM-CODE			DESCRIPTION	UNIT	TOTAL	
						CONTROL 0014-16-255		CONTROL 0014-16-255									
						IH 35W BRIDGE ITEMS		IH 35W ROADWAY ITEMS									
EST.	FINAL	EST.	FINAL	EST.	FINAL	EST.	FINAL	EST.	FINAL		ITEM NO	DESC CODE	SP NO			EST.	FINAL
								2.000			465	2737	001	INLET (COMPL) (TY H WITH LID)	EA	2.000	
								1.000			466	2227		HEADWALL (CH-PW-S) (DIA= 60 IN) (SPL)	EA	1.000	
								1.000			466	2329		WINGWALL (PW-1) (HW=6 FT)	EA	1.000	
								5.000			466	2330		WINGWALL (PW-1) (HW=7 FT)	EA	5.000	
								3.000			466	2331		WINGWALL (PW-1) (HW=8 FT)	EA	3.000	
								1.000			467	2152		SET (TY I) (S= 3 FT) (HW= 4 FT) (6: 1) (C)	EA	1.000	
								6.000			467	2155		SET (TY I) (S= 4 FT) (HW= 4 FT) (6: 1) (C)	EA	6.000	
								2.000			467	2177		SET (TY I) (S= 4 FT) (HW= 3 FT) (6: 1) (P)	EA	2.000	
								2.000			467	2234		SET (TY II) (18 IN) (RCP) (6: 1) (C)	EA	2.000	
								6.000			467	2236		SET (TY II) (24 IN) (RCP) (6: 1) (C)	EA	6.000	
								2.000			467	2240		SET (TY II) (36 IN) (RCP) (6: 1) (C)	EA	2.000	
								6.000			467	2290		SET (TY II) (30 IN) (RCP) (6: 1) (P)	EA	6.000	
								2.000			467	2292		SET (TY II) (36 IN) (RCP) (6: 1) (P)	EA	2.000	
								1.000			467	2297		SET (TY II) (66 IN) (RCP) (6: 1) (P)	EA	1.000	
						8.000					471	2003		GRATE & FRAME	EA	8.000	
								50.000			476	2001		JACK BOR OR TUN PIPE(18 IN) (RC) (CL III)	LF	50.000	
								3.000			479	2001		ADJ MANHS	EA	3.000	
								5.000			479	2006		ADJUST INLET (CAP)	EA	5.000	
								1.000			479	2007		ADJ MANH (CAP)	EA	1.000	
						150.000					481	2012		PVC PIPE (SCH 40) (6 IN)	LF	150.000	
						288.000					481	2013		PVC PIPE (SCH 40) (8 IN)	LF	288.000	
								11.000			496	2005		REMOV STR (WINGWALL)	EA	11.000	
								3.000			496	2006		REMOV STR (HEADWALL)	EA	3.000	
								3564.000			496	2008		REMOV STR (BOX CULVERT)	LF	3564.000	
								5.000			496	2010		REMOV STR (BRIDGE 100-499 FT LENGTH)	EA	5.000	
								3380.000			496	2040		REMOV STR (RET WALL)	LF	3380.000	
								1.000			500	2001	005	MOBILIZATION	LS	1.000	
								33.000			502	2001	033	BARRICADES, SIGNS AND TRAFFIC HANDLING	MO	33.000	
								1680.000			506	2002	010	ROCK FILTER DAMS (INSTALL) (TY 2)	LF	1680.000	
								1680.000			506	2009	010	ROCK FILTER DAMS (REMOVE)	LF	1680.000	
								2109.000			506	2016	010	CONSTRUCTION EXITS (INSTALL) (TY 1)	SY	2109.000	
								2109.000			506	2019	010	CONSTRUCTION EXITS (REMOVE)	SY	2109.000	
								651.000			506	2020	010	EXCAV (EROS & SEDM CONT, IN PLACE)	CY	651.000	
								35080.000			506	2034	010	TEMPORARY SEDIMENT CONTROL FENCE	LF	35080.000	
								31225.000			508	2002		CONSTRUCTING DETOURS	SY	31225.000	
								62080.000			512	2004	002	PORT CTB (FUR & INST) (SNGL SLP) (TY 1)	LF	62080.000	
								6580.000			512	2008	002	PORT CTB (FUR & INST) (LOW PROF) (TY 1)	LF	6580.000	
								400.000			512	2009	002	PORT CTB (FUR & INST) (LOW PROF) (TY 2)	LF	400.000	
								146250.000			512	2022	002	PORT CTB (MOVE) (SNGL SLP) (TY 1)	LF	146250.000	
								19460.000			512	2026	002	PORT CTB (MOVE) (LOW PROF) (TY 1)	LF	19460.000	
								860.000			512	2027	002	PORT CTB (MOVE) (LOW PROF) (TY 2)	LF	860.000	
								62080.000			512	2031	002	PORT CTB (STKPL) (SNGL SLP) (TY 1)	LF	62080.000	
								6580.000			512	2035	002	PORT CTB (STKPL) (LOW PROF) (TY 1)	LF	6580.000	
								400.000			512	2036	002	PORT CTB (STKPL) (LOW PROF) (TY 2)	LF	400.000	
								50559.000			514	2004	002	PERM CONC TRF BARR (SGL SLP) (TY 1) (42")	LF	50559.000	
								2791.000			514	2006	002	PERM CONC TRF BARR (SGL SLP) (TY 3) (42")	LF	2791.000	
								65.000			514	2015	002	PERM CONC TRF BARR (F-SHAPE) (TY 1)	LF	65.000	
								7456.000			514	2042	002	PERM CONC TRF BARR(SLG SLP) (TY 1) (MOD)	LF	7456.000	
						429.000					514	2065	002	PRM CON TRF BAR(SAFETY SH) (TY 1) (HPC)	LF	429.000	
						1185.000					514	2066	002	PRM CON TRF BAR(SG SLP) (TY 1) (42") (HPC)	LF	1185.000	

△2 Replaced 9-4-12

ESTIMATE & QUANTITY SHEET

STATE DIST. NO.	COUNTY	PROJECT NO.	SHEET NO.
02	TARRANT	IM 0355(151)	S8c

ESTIMATE SUMMARY

						PROJECT IM 0355(151)		PROJECT IM 0355(151)		ALT.	ITEM-CODE			DESCRIPTION	UNIT	TOTAL	
						CONTROL 0014-16-255		CONTROL 0014-16-255									
						IH 35W BRIDGE ITEMS		IH 35W ROADWAY ITEMS									
EST.	FINAL	EST.	FINAL	EST.	FINAL	EST.	FINAL	EST.	FINAL		ITEM NO	DESC CODE	SP NO			EST.	FINAL
								3212.000			528	2006		COLORED TEXTURED CONC (5")	SY	3212.000	
								25822.000			529	2004		CONC CURB & GUTTER (TY II)	LF	25822.000	
								12386.000			529	2006		CONC CURB (MONO) (TY II)	LF	12386.000	
								3620.000			530	2010		DRIVEWAYS (CONC)	SY	3620.000	
								24.000			531	2005		CURB RAMPS (TY 1)	EA	24.000	
								3.000			531	2006		CURB RAMPS (TY 2)	EA	3.000	
								7.000			531	2010		CURB RAMPS (TY 7)	EA	7.000	
								4.000			531	2013		CURB RAMPS (TY 20)	EA	4.000	
								13566.000			531	2015		CONC SIDEWALKS (4")	SY	13566.000	
								4.000			531	2017		CURB RAMPS (TY 21)	EA	4.000	
								1.000			531	2020		CURB RAMPS (TY 2) (MOD)	EA	1.000	
								1.000			531	2062		CURB RAMPS (TY 21) (MOD)	EA	1.000	
								125910.000			533	2006	014	SHOULDER TEXTURING (MILLED) (ASPHALT)	LF	125910.000	
								12732.000			540	2002		MTL W-BEAM GD FEN (STEEL POST)	LF	12732.000	
								2.000			540	2005		TERMINAL ANCHOR SECTION	EA	2.000	
								32.000			540	2011		MTL BEAM GD FEN TRANS (THRIE-BEAM)	EA	32.000	
								2.000			540	2012		MTL BEAM GD FEN TRANS (TL2)	EA	2.000	
								44.000			540	2044		DOWNSTREAM ANCHOR TERMINAL(DAT)SECTION	EA	44.000	
								73.000			544	2001		GUARDRAIL END TREATMENT (INSTALL)	EA	73.000	
						3.000		8.000			545	2001		CRASH CUSH ATTEN (INSTL)	EA	11.000	
								18.000			545	2022		CRASH CUSH ATTEN (INSTL) (REACT) (N)	EA	18.000	
								51.000			545	2023		CRASH CUSH ATTEN (MOVE&RESET) (REACT) (N)	EA	51.000	
								18.000			545	2024		CRASH CUSH ATTEN (REMOVE) (REACT) (N)	EA	18.000	
								6.000			545	2025		CRASH CUSH ATTEN (INSTL) (REACT) (W)	EA	6.000	
								5.000			545	2026		CRASH CUSH ATTEN (MOVE&RESET) (REACT) (W)	EA	5.000	
								6.000			545	2027		CRASH CUSH ATTEN (REMOVE) (REACT) (W)	EA	6.000	
								280.000			550	2027		CHAIN LINK FENCE(INSTALL) (8') (BARB TOP)	LF	280.000	
								1.000			550	2069		GATE (INSTALL) (DBL) (BARB TOP) (8'X 18')	EA	1.000	
								15651.000			556	2008	003	PIPE UNDERDRAINS (TY 8) (6")	LF	15651.000	
								6.000			610	2025	015	INS RD IL AM (TY SA) 40T-8 (.25 KW)S	EA	6.000	
								17.000			610	2059	015	INS RD IL AM (U/P) (TY IF) (.15KW)	EA	17.000	
								10.000			610	2067	015	REMOVE RD IL ASM (SHOE-BASE)	EA	10.000	
								16.000			610	2069	015	REMOVE RD IL ASM (U/P)	EA	16.000	
								1.000			610	2097	015	REMOVE RD IL ASM (FOUNDATION ONLY)	EA	1.000	
								25.000			613	2006	002	HI MST IL POLE (150 FT) (100 MPH)	EA	25.000	
								19.000			614	2002		HI MST IL ASM(12-400 WATT) (ASYM) (TY B)	EA	19.000	
								5.000			614	2004		HI MST IL ASM(12-400 WATT) (SYM)	EA	5.000	
								1.000			614	2006		HI MST IL ASM(12-400 WT)ASYM(TY B)SHLD	EA	1.000	
								23070.000			618	2018		CONDT (PVC) (SCHD 40) (2")	LF	23070.000	
								140.000			618	2019		CONDT (PVC) (SCHD 40) (2") (BORE)	LF	140.000	
								655.000			618	2022		CONDT (PVC) (SCHD 40) (3")	LF	655.000	
								930.000			618	2023		CONDT (PVC) (SCHD 40) (3") (BORE)	LF	930.000	
								28425.000			618	2024		CONDT (PVC) (SCHD 40) (4")	LF	28425.000	
								9405.000			618	2025		CONDT (PVC) (SCHD 40) (4") (BORE)	LF	9405.000	
								3920.000			618	2035		CONDT (PVC) (SCHD 80) (2") (BORE)	LF	3920.000	
								721.000			618	2046		CONDT (RM) (1")	LF	721.000	
								1450.000			618	2052		CONDT (RM) (2")	LF	1450.000	
								30.000			618	2056		CONDT (RM) (3")	LF	30.000	
								263.000			618	2080		CONDUIT (PVC) (SCHD 40) (2") (CONC ENCSE)	LF	263.000	
								721.000			618	2091		CONDUIT (PVC) (SCHD 40) (1") (CONC ENCSE)	LF	721.000	

△2 Replaced 9-4-12

ESTIMATE & QUANTITY SHEET

STATE DIST. NO.	COUNTY	PROJECT NO.	SHEET NO.
02	TARRANT	IM 0355(151)	58D

ESTIMATE SUMMARY

						PROJECT IM 0355(151)		PROJECT IM 0355(151)		ALT.	ITEM-CODE			DESCRIPTION	UNIT	TOTAL	
						CONTROL 0014-16-255		CONTROL 0014-16-255									
						IH 35W BRIDGE ITEMS		IH 35W ROADWAY ITEMS									
EST.	FINAL	EST.	FINAL	EST.	FINAL	EST.	FINAL	EST.	FINAL		ITEM NO	DESC CODE	SP NO			EST.	FINAL
								3660.000			620	2001	001	ELEC CONDR (NO. 1) BARE	LF	3660.000	
								9510.000			620	2002	001	ELEC CONDR (NO. 1) INSULATED	LF	9510.000	
								8010.000			620	2003	001	ELEC CONDR (NO. 2) BARE	LF	8010.000	
								23630.000			620	2004	001	ELEC CONDR (NO. 2) INSULATED	LF	23630.000	
								6410.000			620	2007	001	ELEC CONDR (NO. 4) BARE	LF	6410.000	
								19260.000			620	2008	001	ELEC CONDR (NO. 4) INSULATED	LF	19260.000	
								13340.000			620	2009	001	ELEC CONDR (NO. 6) BARE	LF	13340.000	
								21645.000			620	2010	001	ELEC CONDR (NO. 6) INSULATED	LF	21645.000	
								8151.000			620	2011	001	ELEC CONDR (NO. 8) BARE	LF	8151.000	
								21460.000			620	2012	001	ELEC CONDR (NO. 8) INSULATED	LF	21460.000	
								1490.000			620	2015	001	ELEC CONDR (NO.12) BARE	LF	1490.000	
								2980.000			620	2016	001	ELEC CONDR (NO.12) INSULATED	LF	2980.000	
								85315.000			620	2018	001	ELEC CONDR (NO.14) INSULATED	LF	85315.000	
								4210.000			620	2019	001	ELEC CONDR (NO.1/0) BARE	LF	4210.000	
								9735.000			620	2020	001	ELEC CONDR (NO.1/0) INSULATED	LF	9735.000	
								2640.000			620	2021	001	ELEC CONDR (NO.2/0) BARE	LF	2640.000	
								6360.000			620	2022	001	ELEC CONDR (NO.2/0) INSULATED	LF	6360.000	
								14745.000			620	2024	001	ELEC CONDR (NO.3/0) INSULATED	LF	14745.000	
								995.000			620	2025	001	ELEC CONDR (NO.4/0) BARE	LF	995.000	
								5490.000			620	2027	001	ELEC CONDR (350 KCMIL) INSULATED	LF	5490.000	
								3220.000			621	2004		TRAY CABLE (4 CONDR) (12 AWG)	LF	3220.000	
								3.000			624	2007	014	GROUND BOX TY A (122311)	EA	3.000	
								91.000			624	2008	014	GROUND BOX TY A (122311) W/APRON	EA	91.000	
								29.000			624	2013	014	GROUND BOX TY D (162922)	EA	29.000	
								129.000			624	2014	014	GROUND BOX TY D (162922) W/APRON	EA	129.000	
								102.000			624	2021	014	GROUND BOX TY AS W/APRON	EA	102.000	
								7.000			624	2022	014	GROUND BOX TY DS	EA	7.000	
								1.000			628	2144	003	ELC SRV TY T 120/240 000 (NS) GS (L) TP (O)	EA	1.000	
								1.000			628	2158	003	REMOVE ELECTRICAL SERVICES	EA	1.000	
								2.000			628	2216	003	ELC SRV TY A 240/480 100 (NS) AL (E) PS (U)	EA	2.000	
								7.000			628	2239	003	ELC SRV TY D 120/240 100 (NS) SS (N) GC (O)	EA	7.000	
								2.000			628	2256	003	ELC SRV TY A 240/480 125 (NS) AL (E) PS (U)	EA	2.000	
								1.000			628	2257	003	ELC SRV TY A 240/480 150 (NS) AL (E) PS (U)	EA	1.000	
								7.000			628	2307	003	ELC SRV TY D 120/240 200 (NS) SS (N) GC (O)	EA	7.000	
								1.000			628	2369	003	ELC SRV TY D 120/240 125 (NS) SS (N) GC (O)	EA	1.000	
								2.000			628	2370	003	ELC SRV TY D 120/240 100 (NS) SS (N) GC (U)	EA	2.000	
								2.000			628	2371	003	ELC SRV TY D 120/240 150 (NS) SS (N) GC (U)	EA	2.000	
								1.000			628	2372	003	ELC SRV TY D 120/240 175 (NS) SS (N) GC (U)	EA	1.000	
								2.000			628	2373	003	ELC SRV TY D 120/240 200 (NS) SS (N) GC (U)	EA	2.000	
						252.000		473.000			636	2001	014	ALUMINUM SIGNS (TY A)	SF	725.000	
								1978.000			636	2002	014	ALUMINUM SIGNS (TY G)	SF	1978.000	
								6123.000			636	2003	014	ALUMINUM SIGNS (TY O)	SF	6123.000	
								7.000			644	2002		IN SM RD SN SUP&AM TY10BWG (1) SA (P-BM)	EA	7.000	
								111.000			644	2004		IN SM RD SN SUP&AM TY10BWG (1) SA (T)	EA	111.000	
								2.000			644	2022		IN SM RD SN SUP&AM TYS80 (1) SA (P)	EA	2.000	
								20.000			644	2025		IN SM RD SN SUP&AM TYS80 (1) SA (T)	EA	20.000	
								10.000			644	2027		IN SM RD SN SUP&AM TYS80 (1) SA (U)	EA	10.000	
								7.000			644	2028		IN SM RD SN SUP&AM TYS80 (1) SA (U-1EXT)	EA	7.000	
								10.000			644	2042		IN SM RD SN SUP&AM TYS80 (2) SA (P)	EA	10.000	
								128.000			644	2060		REMOVE SM RD SN SUP & AM	EA	128.000	

Replaced 9.4.12

ESTIMATE & QUANTITY SHEET

STATE DIST. NO.	COUNTY	PROJECT NO.	SHEET NO.
02	TARRANT	IM 0355(151)	S8E

ESTIMATE SUMMARY

						PROJECT IM 0355(151)		PROJECT IM 0355(151)		ALT	ITEM-CODE			DESCRIPTION	UNIT	TOTAL	
						CONTROL 0014-16-255		CONTROL 0014-16-255									
						IH 35W BRIDGE ITEMS		IH 35W ROADWAY ITEMS									
EST.	FINAL	EST.	FINAL	EST.	FINAL	EST.	FINAL	EST.	FINAL		ITEM NO	DESC CODE	SP NO			EST.	FINAL
								47.000			644	2081		IN SM RD SN SUP&AM TYTWT(1)WS(P)	EA	47.000	
								77.000			644	2082		IN SM RD SN SUP&AM TYTWT(1)WS(T)	EA	77.000	
								10011.000			647	2001		INSTALL LASS (STRUCT STEEL)	LB	10011.000	
								18.000			647	2003		REMOVE LASA	EA	18.000	
								4.000			650	2022		INS OH SN SUP(25 FT CANT)	EA	4.000	
								6.000			650	2028		INS OH SN SUP(30 FT CANT)	EA	6.000	
								8.000			650	2034		INS OH SN SUP(35 FT CANT)	EA	8.000	
								7.000			650	2040		INS OH SN SUP(40 FT CANT)	EA	7.000	
								7.000			650	2058		INS OH SN SUP(55 FT BRDG)	EA	7.000	
								1.000			650	2063		INS OH SN SUP(60 FT BRDG)	EA	1.000	
								3.000			650	2068		INS OH SN SUP(65 FT BRDG)	EA	3.000	
								4.000			650	2083		INS OH SN SUP(80 FT BRDG)	EA	4.000	
								2.000			650	2093		INS OH SN SUP(90 FT BRDG)	EA	2.000	
								1.000			650	2108		INS OH SN SUP(105 FT BRDG)	EA	1.000	
								8.000			650	2173		REMOVE OVERHD SIGN SUP	EA	8.000	
								164.000			658	2240		INSTL DEL ASSM (D-SW)SZ 1(FLX)GF2	EA	164.000	
								98.000			658	2263		INSTL DEL ASSM (D-SY)SZ 1(FLX)GND	EA	98.000	
								45.000			658	2269		INSTL DEL ASSM (D-SY)SZ 1(FLX)GF2	EA	45.000	
								63.000			658	2278		INSTL DEL ASSM (D-SY)SZ (TYC)CTB(BI)	EA	63.000	
								108.000			658	2292		INSTL DEL ASSM (D-DW)SZ 1(FLX)GND	EA	108.000	
								251.000			658	2364		INSTL DEL ASSM (D-SW)SZ 1(TYC)CTB(BR)	EA	251.000	
								298.000			658	2365		INSTL DEL ASSM (D-SY)SZ 1(TYC)CTB(BR)	EA	298.000	
								5283.000			662	2056		WK ZN PAV MRK REMOV (REFL) TY II-C-R	EA	5283.000	
								53083.000			662	2064		WK ZN PAV MRK REMOV (W) 4" (BRK)	LF	53083.000	
								170830.000			662	2067		WK ZN PAV MRK REMOV (W) 4" (SLD)	LF	170830.000	
								3266.000			662	2075		WK ZN PAV MRK REMOV (W) 8" (SLD)	LF	3266.000	
								1737.000			662	2077		WK ZN PAV MRK REMOV (W) 12" (SLD)	LF	1737.000	
								520.000			662	2079		WK ZN PAV MRK REMOV (W) 24" (SLD)	LF	520.000	
								22.000			662	2084		WK ZN PAV MRK REMOV (W) (ARROW)	EA	22.000	
								8.000			662	2085		WK ZN PAV MRK REMOV (W) (DBL ARROW)	EA	8.000	
								44.000			662	2086		WK ZN PAV MRK REMOV (W) (ENTR GORE)	EA	44.000	
								36.000			662	2087		WK ZN PAV MRK REMOV (W) (EXIT GORE)	EA	36.000	
								7.000			662	2093		WK ZN PAV MRK REMOV (W) (UTURN ARROW)	EA	7.000	
								30.000			662	2094		WK ZN PAV MRK REMOV (W) (WORD)	EA	30.000	
								188650.000			662	2099		WK ZN PAV MRK REMOV (Y) 4" (SLD)	LF	188650.000	
								28789.000			666	2003		REFL PAV MRK TY I (W) 4" (BRK)(100MIL)	LF	28789.000	
								202.000			666	2006		REFL PAV MRK TY I (W) 4" (DOT)(100MIL)	LF	202.000	
								246.000			666	2009		REFL PAV MRK TY I (W) 4" (LNDP)(100MIL)	LF	246.000	
								142267.000			666	2012		REFL PAV MRK TY I (W) 4" (SLD)(100MIL)	LF	142267.000	
								32284.000			666	2036		REFL PAV MRK TY I (W) 8" (SLD)(100MIL)	LF	32284.000	
								4720.000			666	2039		REFL PAV MRK TY I (W) 12"(LNDP)(100MIL)	LF	4720.000	
								8244.000			666	2042		REFL PAV MRK TY I (W) 12"(SLD)(100MIL)	LF	8244.000	
								4978.000			666	2048		REFL PAV MRK TY I (W) 24"(SLD)(100MIL)	LF	4978.000	
								44.000			666	2054		REFL PAV MRK TY I (W) (ARROW) (100MIL)	EA	44.000	
								2.000			666	2057		REFL PAV MRK TY I (W)(BIKE ARW)(100MIL)	EA	2.000	
								2.000			666	2063		REFL PAV MRK TY I(W)(BIKE SYML)(100MIL)	EA	2.000	
								10.000			666	2069		REFL PAV MRK TY I(W)(DBL ARROW)(100MIL)	EA	10.000	
								7.000			666	2093		REFL PAV MRK TY I(W)(UTURN ARW)(100MIL)	EA	7.000	
								49.000			666	2096		REFL PAV MRK TY I (W) (WORD) (100MIL)	EA	49.000	
								60.000			666	2099		REF PAV MRK TY I(W)18"(YLD TRI)(100MIL)	EA	60.000	

△2 Replaced 9.4.12

ESTIMATE & QUANTITY SHEET

STATE DIST. NO.	COUNTY	PROJECT NO.	SHEET NO.
02	TARRANT	IM 0355(151)	58P

ESTIMATE SUMMARY

						PROJECT IM 0355(151)		PROJECT IM 0355(151)		ALT.	ITEM-CODE			DESCRIPTION	UNIT	TOTAL	
						CONTROL 0014-16-255		CONTROL 0014-16-255									
				IH 35W BRIDGE ITEMS				IH 35W ROADWAY ITEMS									
EST.	FINAL	EST.	FINAL	EST.	FINAL	EST.	FINAL	EST.	FINAL		ITEM NO	DESC CODE	SP NO			EST.	FINAL
								134083.000			666	2111		REFL PAV MRK TY I (Y) 4" (SLD) (100MIL)	LF	134083.000	
								2241.000			666	2132		REFL PAV MRK TY I (Y) 24"(SLD) (100MIL)	LF	2241.000	
								4585.000			666	2142		REF PAV MRK TY II (W) 4" (BRK)	LF	4585.000	
								85.000			666	2143		REF PAV MRK TY II (W) 4" (DOT)	LF	85.000	
								15256.000			666	2145		REF PAV MRK TY II (W) 4" (SLD)	LF	15256.000	
								4663.000			666	2153		REF PAV MRK TY II (W) 8" (SLD)	LF	4663.000	
								1232.000			666	2155		REF PAV MRK TY II (W) 12" (SLD)	LF	1232.000	
								322.000			666	2157		REF PAV MRK TY II (W) 24" (SLD)	LF	322.000	
								14.000			666	2160		REF PAV MRK TY II (W) (ARROW)	EA	14.000	
								4.000			666	2165		REF PAV MRK TY II (W) (DBL ARROW)	EA	4.000	
								3.000			666	2172		REF PAV MRK TY II (W) (UTURN ARROW)	EA	3.000	
								15.000			666	2173		REF PAV MRK TY II (W) (WORD)	EA	15.000	
								30.000			666	2174		REF PAV MRK TY II (W) 18" (YLD TRI)	EA	30.000	
								12671.000			666	2178		REF PAV MRK TY II (Y) 4" (SLD)	LF	12671.000	
								1232.000			666	2185		REF PAV MRK TY II (Y) 24" (SLD)	LF	1232.000	
								253.000			672	2012	034	REFL PAV MRKR TY I-C	EA	253.000	
								98.000			672	2014	034	REFL PAV MRKR TY I-R	EA	98.000	
								30.000			672	2015	034	REFL PAV MRKR TY II-A-A	EA	30.000	
								3742.000			672	2017	034	REFL PAV MRKR TY II-C-R	EA	3742.000	
								21394.000			677	2001		ELIM EXT PAV MRK & MRKS (4")	LF	21394.000	
								1831.000			677	2003		ELIM EXT PAV MRK & MRKS (8")	LF	1831.000	
								885.000			677	2005		ELIM EXT PAV MRK & MRKS (12")	LF	885.000	
								321.000			677	2007		ELIM EXT PAV MRK & MRKS (24")	LF	321.000	
								16.000			677	2008		ELIM EXT PAV MRK & MRKS (ARROW)	EA	16.000	
								2.000			677	2009		ELIM EXT PAV MRK & MRKS (DBL ARROW)	EA	2.000	
								16.000			677	2018		ELIM EXT PAV MRK & MRKS (WORD)	EA	16.000	
								412143.000			678	2001		PAV SURF PREP FOR MRK (4")	LF	412143.000	
								3266.000			678	2003		PAV SURF PREP FOR MRK (8")	LF	3266.000	
								1737.000			678	2004		PAV SURF PREP FOR MRK (12")	LF	1737.000	
								520.000			678	2006		PAV SURF PREP FOR MRK (24")	LF	520.000	
								44.000			678	2009		PAV SURF PREP FOR MRK (ENTR GORE)	EA	44.000	
								36.000			678	2010		PAV SURF PREP FOR MRK (EXIT GORE)	EA	36.000	
								9406.000			678	2013		PAV SURF PREP FOR MRK (RPM)	EA	9406.000	
								7.000			678	2016		PAV SURF PREP FOR MRK (UTURN ARR)	EA	7.000	
								305413.000			678	2021		PAV SURF PREP FOR MRK (BLAST CLN) (4")	LF	305413.000	
								12964.000			678	2023		PAV SURF PREP FOR MRK (BLAST CLN) (12")	LF	12964.000	
								7219.000			678	2024		PAV SURF PREP FOR MRK (BLAST CLN) (24")	LF	7219.000	
								32284.000			678	2027		PAV SURF PREP FOR MRK (BLAST CLN) (8")	LF	32284.000	
								44.000			678	2028		PAV SURF PREP FOR MRK (BLST CLN) (ARRWS)	EA	44.000	
								49.000			678	2029		PAV SURF PREP FOR MRK (BLST CLN) (WORDS)	EA	49.000	
								10.000			678	2031		PAV SURF PREP MRKS (BLAST CLN) (DBLARW)	EA	10.000	
								60.000			678	2036		PV SRF PRP FOR MRK(BLT CLN) (18"YLD TRI)	LF	60.000	
								2.000			678	2045		PAV SURF PREP FOR MRK (BIKE SYMBOL)	EA	2.000	
								2.000			678	2047		PAV SURF PREP FOR MRK (BIKE ARROW)	EA	2.000	
								2.000			680	2002		INSTALL HWY TRF SIG (ISOLATED)	EA	2.000	
								2.000			681	2001	002	TEMP TRAF SIGNALS	EA	2.000	
								40.000			682	2001	001	BACK PLATE (12 IN) (3 SEC)	EA	40.000	
								4.000			682	2003	001	BACK PLATE (12 IN) (5 SEC)	EA	4.000	
								6.000			682	2022	001	VEH SIG SEC (12 IN) LED (GRN ARW)	EA	6.000	
								42.000			682	2023	001	VEH SIG SEC (12 IN) LED (GRN)	EA	42.000	

2 Replaced 9.4.12

ESTIMATE & QUANTITY SHEET

STATE DIST. NO	COUNTY	PROJECT NO.	SHEET NO.
02	TARRANT	IM 0355(151)	584

ESTIMATE SUMMARY

						PROJECT IM 0355(151)		PROJECT IM 0355(151)		ALT.	ITEM-CODE			DESCRIPTION	UNIT	TOTAL	
						CONTROL 0014-16-255		CONTROL 0014-16-255									
						IH 35W BRIDGE ITEMS		IH 35W ROADWAY ITEMS									
EST.	FINAL	EST.	FINAL	EST.	FINAL	EST.	FINAL	EST.	FINAL		ITEM NO	DESC CODE	SP NO			EST.	FINAL
								6.000			682	2024	001	VEH SIG SEC (12 IN) LED (YEL ARW)	EA	6.000	
								42.000			682	2025	001	VEH SIG SEC (12 IN) LED (YEL)	EA	42.000	
								44.000			682	2027	001	VEH SIG SEC (12 IN) LED (RED)	EA	44.000	
								2855.000			684	2031		TRF SIG CBL (TY A) (14 AWG) (5 CONDR)	LF	2855.000	
								365.000			684	2033		TRF SIG CBL (TY A) (14 AWG) (7 CONDR)	LF	365.000	
								3170.000			684	2036		TRF SIG CBL (TY A) (14 AWG) (10 CONDR)	LF	3170.000	
								3110.000			684	2042		TRF SIG CBL (TY A) (14 AWG) (16 CONDR)	LF	3110.000	
								2.000			686	2031		INS TRF SIG PL AM(S) 1 ARM (32')	EA	2.000	
								1.000			686	2039		INS TRF SIG PL AM(S) 1 ARM (40')	EA	1.000	
								2.000			686	2041		INS TRF SIG PL AM(S) 1 ARM (40') LUM	EA	2.000	
								2.000			686	2045		INS TRF SIG PL AM(S) 1 ARM (44') LUM	EA	2.000	
								2.000			686	2049		INS TRF SIG PL AM(S) 1 ARM (48') LUM	EA	2.000	
								15.000			687	2001	004	PED POLE ASSEMBLY	EA	15.000	
								650.000			690	2009		REMOVAL OF CABLES	LF	650.000	
								3.000			690	2063		REMOVAL OF CONCRETE FOUNDATIONS	EA	3.000	
								1721.000			764	2006		STORM SEWER CLEANING (PIPE) (12"-18" DIA)	LF	1721.000	
								2716.000			764	2007		STORM SEWER CLEANING (PIPE) (19"-24" DIA)	LF	2716.000	
								1832.000			764	2008		STORM SEWER CLEANING (PIPE) (25"-30" DIA)	LF	1832.000	
								2116.000			764	2009		STORM SEWER CLEANING (PIPE) (31"-36" DIA)	LF	2116.000	
								648.000			764	2010		STORM SEWER CLEANING (PIPE) (37"-42" DIA)	LF	648.000	
								418.000			764	2011		STORM SEWER CLEANING (PIPE) (43"-54" DIA)	LF	418.000	
								2957.000			764	2012		STORM SEWER CLEANING (PIPE) (55"-74" DIA)	LF	2957.000	
								590.000			764	2013		STORM SEWER CLEANING (PIPE) (75"-96" DIA)	LF	590.000	
								120.000			764	2015		STORM SEWER CLEAN (BOX CULV) (6-<12 SF)	LF	120.000	
								102.000			764	2016		STORM SEWER CLEAN (BOX CULV) (12-<24 SF)	LF	102.000	
								325.000			764	2017		STORM SEWER CLEAN (BOX CULV) (24-<48 SF)	LF	325.000	
								20.000			774	2010		REPAIR (REACT)	EA	20.000	
								302.000			780	2001		EPOXY INJECTION (TY IX)	LF	302.000	
								135.000			2053	2001		WATER LINE GROUTING	CY	135.000	
								2.000			2053	2002		6" WATER ABANDONMENT PLUG	EA	2.000	
								1.000			2053	2003		8" WATER ABANDONMENT PLUG	EA	1.000	
								4.000			2053	2004		12" WATER ABANDONMENT PLUG	EA	4.000	
								7.000			2053	2005		24" WATER ABANDONMENT PLUG	EA	7.000	
								2.000			2053	2006		REMOVE 6" WATER VALVE	EA	2.000	
								1.000			2053	2007		REMOVE 8" WATER VALVE	EA	1.000	
								1.000			2053	2008		REMOVE 12" WATER VALVE	EA	1.000	
								2.000			2053	2009		SALVAGE FIRE HYDRANT	EA	2.000	
								1.000			2053	2010		SALVAGE 1" WATER METER	EA	1.000	
								3.000			2053	2011		SALVAGE 1-1/2" WATER METER	EA	3.000	
								4.000			2053	2012		SALVAGE 2" WATER METER	EA	4.000	
								1.000			2053	2013		SALVAGE WATER SAMPLING STATION	EA	1.000	
								5.000			2053	2014		REMOVE CONCRETE WATER VAULT	EA	5.000	
								240.000			2053	2015		SANITARY LINE GROUTING	CY	240.000	
								1.000			2053	2016		10" SEWER ABANDONMENT PLUG	EA	1.000	
								1.000			2053	2017		36" SEWER ABANDONMENT PLUG	EA	1.000	
								1.000			2053	2018		42" SEWER ABANDONMENT PLUG	EA	1.000	
								6.000			2053	2019		REMOVE 4' SEWER MANHOLE	EA	6.000	
								3.000			2053	2020		REMOVE 5' SEWER MANHOLE	EA	3.000	
								1.000			2053	2021		REMOVE SEWER JUNCTION STRUCTURE	LS	1.000	
								1.000			2053	2022		SWPPP 2 1 ACRE	LS	1.000	

△3 Replaced 9.4.12

ESTIMATE & QUANTITY SHEET

STATE DIST. NO.	COUNTY	PROJECT NO.	SHEET NO.
02	TARRANT	IM 0355(151)	58H

ESTIMATE SUMMARY

						PROJECT IM 0355(151)		PROJECT IM 0355(151)		ALT	ITEM-CODE			DESCRIPTION	UNIT	TOTAL	
						CONTROL 0014-16-255		CONTROL 0014-16-255									
						IH 35W BRIDGE ITEMS		IH 35W ROADWAY ITEMS									
EST.	FINAL	EST.	FINAL	EST.	FINAL	EST.	FINAL	EST.	FINAL		ITEM NO	DESC CODE	SP NO			EST.	FINAL
								180.000			2053	2023		TEMPORARY ASPHALT PAVING REPAIR	LF	180.000	
								490.000			2053	2024		6" CONCRETE PAVING REPAIR	SY	490.000	
								510.000			2053	2025		11" CONCRETE PAVING REPAIR	SY	510.000	
								200.000			2053	2026		4" CONCRETE SIDEWALK	SF	200.000	
								815.000			2053	2027		7" CONCRETE DRIVEWAY	SF	815.000	
								560.000			2053	2028		7" CONCRETE CURB AND GUTTER	SF	560.000	
								110.000			2053	2029		4" SOLID PAVEMENT MARKING PAINT (Y)	LF	110.000	
								40.000			2053	2030		REFLECTIVE RAISED MARKER, TYPE W	EA	40.000	
								3200.000			2053	2032		SEEDING, HYDROMULCH	SY	3200.000	
								2530.000			2053	2033		PRE-CCTV INSPECTION	LF	2530.000	
								1267.000			2053	2034		POST-CCTV INSPECTION	LF	1267.000	
								8.000			2053	2035		MANHOLE VACUUM TESTING	EA	8.000	
								1.000			2053	2036		BYPASS PUMPING	LS	1.000	
								5.000			2053	2038		EXPL EXCAVATION OF EXISTING UTILITIES	EA	5.000	
								1737.000			2053	2039		TRENCH SAFETY	LF	1737.000	
								1.000			2053	2040		UTILITY MARKERS	LS	1.000	
								8.000			2053	2041		CONCRETE COLLAR	EA	8.000	
								245.000			2053	2044		24" CASING BY OTHER THAN OPEN CUT	LF	245.000	
								575.000			2053	2045		42" CASING BY OTHER THAN OPEN CUT	LF	575.000	
								744.000			2053	2047		60" CAS/TUN LINER PLT OTHER THAN OPN CT	LF	744.000	
								245.000			2053	2048		12" WATER CARRIER PIPE	LF	245.000	
								575.000			2053	2049		24" WATER CARRIER PIPE	LF	575.000	
								744.000			2053	2051		42" SEWER CARRIER PIPE	LF	744.000	
								12.000			2053	2052		DUCTILE IRON WATER FITTINGS	TON	12.000	
								1.000			2053	2053		C303 FITTINGS	LS	1.000	
								1.000			2053	2054		HYDROCARBON RESISTANT GASKETS	LS	1.000	
								20.000			2053	2055		6" DIP WATER	LF	20.000	
								906.000			2053	2059		12" DIP WATER	LF	906.000	
								288.000			2053	2061		24' WATER PIPE	LF	288.000	
								2.000			2053	2062		FIRE HYDRANT	EA	2.000	
								1.000			2053	2063		WATER SAMPLING STATION	EA	1.000	
								1.000			2053	2064		CONNECT TO EXISTING 10" WATER MAIN	EA	1.000	
								1.000			2053	2065		CONNECT TO EXISTING 12" WATER MAIN	EA	1.000	
								2.000			2053	2066		CONNECT TO EXISTING 24" WATER MAIN	EA	2.000	
								1.000			2053	2069		1" WATER SERVICE, METER RELOCATION	EA	1.000	
								1.000			2053	2070		1" WATER SERVICE	EA	1.000	
								90.000			2053	2071		1" PRIVATE SERVICE	LF	90.000	
								3.000			2053	2072		1-1/2" WATER SERVICE, METER RELOCATION	EA	3.000	
								3.000			2053	2073		1-1/2" WATER SERVICE	EA	3.000	
								110.000			2053	2074		1-1/2" PRIVATE SERVICE	LF	110.000	
								4.000			2053	2075		WATER SERVICE, METER RELOCATION	EA	4.000	
								4.000			2053	2076		WATER SERVICE	EA	4.000	
								140.000			2053	2077		2" PRIVATE SERVICE	LF	140.000	
								2.000			2053	2079		6" GATE VALVE	EA	2.000	
								2.000			2053	2081		12" GATE VALVE	EA	2.000	
								3.000			2053	2082		24" GATE VALVE AND VAULT	EA	3.000	
								1.000			2053	2084		6" SEWER SERVICE	EA	1.000	
								394.000			2053	2085		12" DIP SEWER	LF	394.000	
								129.000			2053	2087		42" FIBERGLASS SEWER PIPE	LF	129.000	
								179.000			2053	2088		EPOXY MANHOLE LINER	LF	179.000	

Replaced 9.4.12

ESTIMATE & QUANTITY SHEET

STATE DIST. NO.	COUNTY	PROJECT NO.	SHEET NO.
02	TARRANT	IM 0355(151)	S8I

ESTIMATE SUMMARY

						PROJECT IM 0355(151)		PROJECT IM 0355(151)		ALT.	ITEM-CODE			DESCRIPTION	UNIT	TOTAL	
						CONTROL 0014-16-255		CONTROL 0014-16-255									
						IH 35W BRIDGE ITEMS		IH 35W ROADWAY ITEMS									
EST.	FINAL	EST.	FINAL	EST.	FINAL	EST.	FINAL	EST.	FINAL		ITEM NO	DESC CODE	SP NO			EST.	FINAL
								3.000			2053	2089		4' MANHOLE	EA	3.000	
								43.000			2053	2090		4' EXTRA DEPTH MANHOLE	LF	43.000	
								54.000			2053	2091		5' EXTRA DEPTH MANHOLE	LF	54.000	
								2.000			2053	2092		5' TYPE A MANHOLE	EA	2.000	
								1.000			2053	2093		5' FIBERGLASS TYPE A MANHOLE	EA	1.000	
								2.000			2053	2095		SANITARY SEWER JUNCTION STRUCTURE	LS	2.000	
								5.000			2053	2096		TRAFFIC CONTROL	MO	5.000	
								258666.000			3224	2008		D-GR HMA (QCQA) TY-B PG64-22	TON	258666.000	
								6294.000			3224	2040		D-GR HMA (QCQA) TY-D PG64-22	TON	6294.000	
								716.000			3224	2062		D-GR HMA (QCQA) TY-D PG64-22 (LEVEL-UP)	TON	716.000	
								7776.000			4116	2001		SOIL NAIL ANCHORS	LF	7776.000	
								4405.000			5049	2001		BIODGRD EROSION CONTROL LOGS (8" DIA)	LF	4405.000	
								2.000			6007	2001		REMOVING TRAFFIC SIGNALS	EA	2.000	
								1.000			6008	2002		REMOVE OVERHEAD SIGN PANELS	EA	1.000	
								2.000			6266	2001	017	VIVDS PROCESSOR SYSTEM	EA	2.000	
								6.000			6266	2002	017	VIVDS CAMERA ASSEMBLY	EA	6.000	
								3.000			6266	2003	017	VIVDS SET-UP SYSTEM	EA	3.000	
								4750.000			6266	2005	017	VIVDS COMMUNICATION CABLE (COAXIAL)	LF	4750.000	
								6.000			6266	2009		VIVIDS CAMERA SYS (INSTALLATION ONLY)	EA	6.000	
								1.000			6266	2014		VIVDS PROCESSOR ASSEM (INSTALL ONLY)	EA	1.000	
								6.000			6834	2002		PORTABLE CHANGEABLE MESSAGE SIGN	EA	6.000	
								30.000			8260	2002		LED COUNTDOWN PED SIGNAL MOD W/HOUSING	EA	30.000	
								1000.000			8368	2003		CONDUIT (PREPARE)	LF	1000.000	
								8.000			8368	2008		GROUND BOX (PREPARE)	EA	8.000	
								30.000			8835	2001		ACCESSIBLE PEDESTRIAN SIGNAL UNITS	EA	30.000	
								1.000			8898	2001		REM AND REL EXIST CCTV FIELD EQUIPMENT	EA	1.000	
								2.000			8898	2002		REMOVE AND REL EXIST LED DMS SYSTEM	EA	2.000	
								1.000			8898	2003		REMOVE AND RELOCATE EXISTING RVSD	EA	1.000	
								3.000			8898	2004		REMOVE AND RELOCATE SSR LINK	EA	3.000	
								1.000			8898	2005		REMOVE AND RELOCATE WER LINK	EA	1.000	
								43965.000			8899	2001		MULTI-DUCT CONDUIT SYS (SCH 40) (4")	LF	43965.000	
								24335.000			8899	2002		MULTI-DUCT COND SYS (SCH 40) (4") (BORE)	LF	24335.000	
								680.000			8899	2003		MULTI-DUCT CONDUIT SYS (SCH 80) (4")	LF	680.000	

2 Replaced 9.4.12

ESTIMATE & QUANTITY SHEET

STATE DIST. NO	COUNTY	PROJECT NO.	SHEET NO.
02	TARRANT	IM 0355(151)	58 J

SUMMARY OF TRAFFIC CONTROL ITEMS

TCP PHASE 1		403 2001	464 2003	464 2005		465 2077	476 2001	479 2006	479 2007	508 2002	512 2008	512 2009	512 2026	512 2027	512 2035	512 2036
		TEMPORARY SPL SHORING	RC PIPE (CL III) (18 IN)	RC PIPE (CL III) (24 IN)		INLET (COMP) (DROP) (TY 1)	JACK BOR OR TUN PIPE (18 IN) (RC) (CL III)	ADJ INLET (CAP)	ADJ MANH (CAP)	CONSTRUCTION DETOURS	PORT CTB (FUR & INST) (LOW PROFILE) (TY 1)	PORT CTB (FUR & INST) (LOW PROFILE) (TY 2)	PORT CTB (MOVE) (LOW PROFILE) (TY 1)	PORT CTB (MOVE) (LOW PROFILE) (TY 2)	PORT CTB (STKPL) (LOW PROFILE) (TY 1)	PORT CTB (STKPL) (LOW PROFILE) (TY 2)
		SF	LF	LF		EA	EA	EA	EA	SY	LF	LF	LF	LF	LF	LF
CSJ: 0081-12-045																
PHASE 1 STEP 1																
SHEET 1 OF 24																
SHEET 2 OF 24										357						
SHEET 3 OF 24		7,613														
SHEET 4 OF 24			96				50			397						
CSJ: 0081-12-045 TOTAL		7,613	96			0	50	0		754	0	0				
CSJ: 0014-16-255																
PHASE 1 STEP 1																
SHEET 5 OF 24										304						
SHEET 6 OF 24		1,554								414						
SHEET 7 OF 24																
SHEET 8 OF 24																
SHEET 9 OF 24			132							1,282	500	20				
SHEET 10 OF 24		1,598								2,299	420	20				
SHEET 11 OF 24										359	1,720	60				
SHEET 12 OF 24			42					2		1,971	1,320					
SHEET 13 OF 24										3,335	800	20				
SHEET 14 OF 24		5,875								1,021						
SHEET 15 OF 24																
SHEET 16 OF 24			12			1										
SHEET 17 OF 24			76													
SHEET 18 OF 24																
SHEET 19 OF 24																
SHEET 20 OF 24																
SHEET 21 OF 24																
SHEET 22 OF 24										224						
SHEET 23 OF 24			78							2,903	820					
SHEET 24 OF 24										1,737	120	20				
CSJ: 0014-16-255 TOTAL		9,027	340			1	0	2		15,848	5,700	140				
PHASE TOTAL		16,640	436			1	50	2		16,602	5,700	140				

I. S. ENGINEERS, LLC

TBPE REG. # F-11657

Texas Department of Transportation

© 2012

IH 35W FROM NORTH TARRANT PKWY TO IH 820

QUANTITY SUMMARY
TRAFFIC CONTROL

SHEET 1 OF 33

DESIGN	FED.RD. DIV.NO.	FEDERAL AID PROJECT NO.		HIGHWAY NO.
SY	6	(SEE TITLE SHEET)		IH 35W
GRAPHICS ZS	STATE	DISTRICT	COUNTY	SHEET NO.
CHECK BV	TEXAS	FTW	TARRANT	59
CHECK MNM	CONTROL	SECTION	JOB	
	0014	16	255, ETC.	

SUMMARY OF TRAFFIC CONTROL ITEMS

TCP PHASE 1	512 2004 PORT CTB (FUR & INST) (SNGL SLP) (TY 1)	512 2022 PORT CTB (MOVE) (SNGL SLP) (TY 1)	512 2031 PORT CTB (STKPL) (SNGL SLP) TY 1)	545 2022 CRASH CUSH ATTEN (INSTL) (REACT) (N)	545 2023 CRASH CUSH ATTEN (MOVE&RESET) (REACT) (N)	545 2024 CRASH CUSH ATTEN (REMOVE) (REACT) (N)	545 2025 CRASH CUSH ATTEN (INSTL) (REACT) (W)	545 2026 CRASH CUSH ATTEN (MOVE&RESET) (REACT) (W)	545 2027 CRASH CUSH ATTEN (REMOVE) (REACT) (W)	662 2056 WK ZN PAV MRK REMOV (REFL) (TY II-C-R)	662 2064 WK ZN PAV MRK REMOV (W) 4" (BRK)	662 2067 WK ZN PAV MRK REMOV (W) 4" (SLD)	662 2075 WK ZN PAV MRK REMOV (W) 8" (SLD)	662 2077 WK ZN PAV MRK REMOV (W) 12" (SLD)	662 2079 WK ZN PAV MRK REMOV (W) 24" (SLD)
	LF	LF	LF	EA	EA	EA	EA	EA	EA	EA	LF	LF	LF	LF	LF
CSJ: 0081-12-045															
PHASE 1 STEP 1															
SHEET 1 OF 24															
SHEET 2 OF 24	630			2											
SHEET 3 OF 24	1,920														
SHEET 4 OF 24	3,060			1			1								
CSJ: 0081-12-045 TOTAL	5,610			3			1			0	0	0			
CSJ: 0014-16-255															
PHASE 1 STEP 1															
SHEET 5 OF 24	1,230			1											
SHEET 6 OF 24	1,380			1											
SHEET 7 OF 24	750														
SHEET 8 OF 24															
SHEET 9 OF 24	1,500			2											
SHEET 10 OF 24	3,780			1											
SHEET 11 OF 24	2,340														
SHEET 12 OF 24	1,200														
SHEET 13 OF 24	1,830											412			
SHEET 14 OF 24	2,400														
SHEET 15 OF 24	570			1											
SHEET 16 OF 24	420			1											
SHEET 17 OF 24	1,200														
SHEET 18 OF 24	1,020														
SHEET 19 OF 24															
SHEET 20 OF 24															
SHEET 21 OF 24															
SHEET 22 OF 24	810			1						14	150	584			
SHEET 23 OF 24	2,490									11	110	458			
SHEET 24 OF 24	2,220			1											
CSJ: 0014-16-255 TOTAL	25,140			9			0			25	260	1,454			
PHASE TOTAL	30,750			12			1			25	260	1,454			

I. S. ENGINEERS, LLC

TBPE REG. # F-11657

Texas Department of Transportation

© 2012

IH 35W FROM NORTH TARRANT PKWY TO IH 820

QUANTITY SUMMARY
TRAFFIC CONTROL

SHEET 2 OF 33

DESIGN	FED.RD. DIV.NO.	FEDERAL AID PROJECT NO.		HIGHWAY NO.
SY	6	(SEE TITLE SHEET)		IH 35W
GRAPHICS ZS	STATE	DISTRICT	COUNTY	SHEET NO.
CHECK BV	TEXAS	FTW	TARRANT	60
CHECK MNM	CONTROL	SECTION	JOB	
	0014	16	255, ETC.	

FILENAME: S3BTCPSUM02.dgn

DRAWING DATE: 8/17/2012

SUMMARY OF TRAFFIC CONTROL ITEMS

TCP PHASE 1	662 2084	662 2085	662 2086	662 2087	662 2093	662 2094	662 2099	678 2001	678 2003	678 2004	678 2006	678 2009	678 2010	678 2013
	WK ZN PAV MRK REMOV (W) (ARROW)	WK ZN PAV MRK REMOV (W) (DBL ARROW)	WK ZN PAV MRK REMOV (W) (ENTR GORE)	WK ZN PAV MRK REMOV (W) (EXIT GORE)	WK ZN PAV MRK REMOV (W) (UTURN ARROW)	WK ZN PAV MRK REMOV (W) (WORD)	WK ZN PAV MRK REMOV (Y) 4" (SLD)	PAV SURF PREP FOR MRK (4")	PAV SURF PREP FOR MRK (8")	PAV SURF PREP FOR MRK (12")	PAV SURF PREP FOR MRK (24")	PAV SURF PREP FOR MRK (ENTR GORE)	PAV SURF PREP FOR MRK (EXIT GORE)	PAV SURF PREP FOR MRK (RPM)
	EA	EA	EA	EA	EA	EA	LF	LF	LF	LF	LF	EA	EA	EA
CSJ: 0081-12-045														
PHASE 1 STEP 1														
SHEET 1 OF 24								0				0		0
SHEET 2 OF 24								0				0		0
SHEET 3 OF 24								0				0		0
SHEET 4 OF 24								0				0		0
CSJ: 0081-12-045 TOTAL	0		0			0	0	0				0		0
CSJ: 0014-16-255														
PHASE 1 STEP 1														
SHEET 5 OF 24								0				0		0
SHEET 6 OF 24							158	158				0		0
SHEET 7 OF 24								0				0		0
SHEET 8 OF 24								0				0		0
SHEET 9 OF 24							493	493				0		0
SHEET 10 OF 24							347	347				0		0
SHEET 11 OF 24	3					3		0				0		0
SHEET 12 OF 24								0				0		0
SHEET 13 OF 24			1					412				1		0
SHEET 14 OF 24								0				0		0
SHEET 15 OF 24								0				0		0
SHEET 16 OF 24								0				0		0
SHEET 17 OF 24								0				0		0
SHEET 18 OF 24								0				0		0
SHEET 19 OF 24								0				0		0
SHEET 20 OF 24								0				0		0
SHEET 21 OF 24								0				0		0
SHEET 22 OF 24								734				0		14
SHEET 23 OF 24							928	1,496				0		11
SHEET 24 OF 24							1,200	1,200				0		0
CSJ: 0014-16-255 TOTAL	3		1			3	3,126	4,840				1		25
PHASE TOTAL	3		1			3	3,126	4,840				1		25

I. S. ENGINEERS, LLC

TBPE REG. # F-11657

Texas Department of Transportation

© 2012

IH 35W FROM NORTH TARRANT PKWY TO IH 820

QUANTITY SUMMARY
TRAFFIC CONTROL

SHEET 3 OF 33

DESIGN	FED.RD. DIV.NO.	FEDERAL AID PROJECT NO.		HIGHWAY NO.
SY	6	(SEE TITLE SHEET)		IH 35W
GRAPHICS ZS	STATE	DISTRICT	COUNTY	SHEET NO.
CHECK BV	TEXAS	FTW	TARRANT	61
CHECK MNM	CONTROL	SECTION	JOB	
	0014	16	255, ETC.	

FILENAME: S3BTCPSUM03.dgn

DRAWING DATE: 8/17/2012

SUMMARY OF TRAFFIC CONTROL ITEMS

TCP PHASE 1		403 2001	464 2003	464 2005		465 2077	476 2001	479 2006	479 2007	508 2002	512 2008	512 2009	512 2026	512 2027	512 2035	512 2036
		TEMPORARY SPL SHORING	RC PIPE (CL III) (18 IN)	RC PIPE (CL III) (24 IN)		INLET (COMP) (DROP) (TY 1)	JACK BOR OR TUN PIPE (18 IN) (RC) (CL III)	ADJ INLET (CAP)	ADJ MANH (CAP)	CONSTRUCTION DETOURS	PORT CTB (FUR & INST) (LOW PROFILE) (TY 1)	PORT CTB (FUR & INST) (LOW PROFILE) (TY 2)	PORT CTB (MOVE) (LOW PROFILE) (TY 1)	PORT CTB (MOVE) (LOW PROFILE) (TY 2)	PORT CTB (STKPL) (LOW PROFILE) (TY 1)	PORT CTB (STKPL) (LOW PROFILE) (TY 2)
		SF	LF	LF		EA	EA	EA	EA	SY	LF	LF	LF	LF	LF	LF
CSJ: 0081-12-045																
PHASE 1 STEP 2																
SHEET 1 OF 24																
SHEET 2 OF 24		2,992														
SHEET 3 OF 24		359														
SHEET 4 OF 24										5						
CSJ: 0081-12-045 TOTAL		3,351								5		0	0	0		
CSJ: 0014-16-255																
PHASE 1 STEP 2																
SHEET 5 OF 24																
SHEET 6 OF 24																
SHEET 7 OF 24																
SHEET 8 OF 24																
SHEET 9 OF 24																
SHEET 10 OF 24		2,151														
SHEET 11 OF 24													220	20		
SHEET 12 OF 24																
SHEET 13 OF 24		536														
SHEET 14 OF 24		2,448														
SHEET 15 OF 24																
SHEET 16 OF 24																
SHEET 17 OF 24																
SHEET 18 OF 24																
SHEET 19 OF 24																
SHEET 20 OF 24																
SHEET 21 OF 24																
SHEET 22 OF 24																
SHEET 23 OF 24																
SHEET 24 OF 24										1,061						
PHASE 1 STEP 2B																
SHEET 1 OF 3																
SHEET 2 OF 3																
SHEET 3 OF 3		1,706											520	20		
CSJ: 0014-16-255 TOTAL		6,841								1,061		0	740	40		
PHASE TOTAL		10,192								1,066		0	740	40		

I. S. ENGINEERS, LLC

TBPE REG. # F-11657

Texas Department of Transportation

© 2012

IH 35W FROM NORTH TARRANT PKWY TO IH 820

QUANTITY SUMMARY
TRAFFIC CONTROL

SHEET 4 OF 33

DESIGN	FED.RD. DIV.NO.	FEDERAL AID PROJECT NO.		HIGHWAY NO.
SY	6	(SEE TITLE SHEET)		IH 35W
GRAPHICS ZS	STATE	DISTRICT	COUNTY	SHEET NO.
CHECK BV	TEXAS	FTW	TARRANT	62
CHECK MNM	CONTROL	SECTION	JOB	
	0014	16	255, ETC.	

FILENAME: S3BTCPSUM04.dgn

DRAWING DATE: 8/20/2012

SUMMARY OF TRAFFIC CONTROL ITEMS

TCP PHASE 1	512 2004 PORT CTB (FUR & INST) (SNGL SLP) (TY 1)	512 2022 PORT CTB (MOVE) (SNGL SLP) (TY 1)	512 2031 PORT CTB (STKPL) (SNGL SLP) TY 1)	545 2022 CRASH CUSH ATTEN (INSTL) (REACT) (N)	545 2023 CRASH CUSH ATTEN (MOVE&RESET) (REACT) (N)	545 2024 CRASH CUSH ATTEN (REMOVE) (REACT) (N)	545 2025 CRASH CUSH ATTEN (INSTL) (REACT) (W)	545 2026 CRASH CUSH ATTEN (MOVE&RESET) (REACT) (W)	545 2027 CRASH CUSH ATTEN (REMOVE) (REACT) (W)	662 2056 WK ZN PAV MRK REMOV (REFL) (TY II-C-R)	662 2064 WK ZN PAV MRK REMOV (W) 4" (BRK)	662 2067 WK ZN PAV MRK REMOV (W) 4" (SLD)	662 2075 WK ZN PAV MRK REMOV (W) 8" (SLD)	662 2077 WK ZN PAV MRK REMOV (W) 12" (SLD)	662 2079 WK ZN PAV MRK REMOV (W) 24" (SLD)
	LF	LF	LF	EA	EA	EA	EA	EA	EA	EA	LF	LF	LF	LF	LF
CSJ: 0081-12-045															
PHASE 1 STEP 2															
SHEET 1 OF 24															
SHEET 2 OF 24		1,080													
SHEET 3 OF 24		870			1										
SHEET 4 OF 24		1,020			2					16	160	648			
CSJ: 0081-12-045 TOTAL		2,970		0	3		0			16	160	648	0	0	0
CSJ: 0014-16-255															
PHASE 1 STEP 2															
SHEET 5 OF 24		1,620			2					19	200	786			
SHEET 6 OF 24		1,350								22	220	793			
SHEET 7 OF 24															
SHEET 8 OF 24															
SHEET 9 OF 24		1,770			2		1			49	490	1,038			
SHEET 10 OF 24		2,730								67	670	1,284			
SHEET 11 OF 24		2,400								78	787	2,956	1,109	902	220
SHEET 12 OF 24	930	1,470								58	640	1,200			
SHEET 13 OF 24	1,320	1,830					1			29	300	1,870			
SHEET 14 OF 24		1,770								30	300	937			
SHEET 15 OF 24										14	140				
SHEET 16 OF 24															
SHEET 17 OF 24															
SHEET 18 OF 24															
SHEET 19 OF 24															
SHEET 20 OF 24															
SHEET 21 OF 24															
SHEET 22 OF 24		390								14	140	585			
SHEET 23 OF 24		2,400								36	360	1,200			
SHEET 24 OF 24		1,620								30	300	1,252			
PHASE 1 STEP 2B															
SHEET 1 OF 3		870										855			
SHEET 2 OF 3		270										243			
SHEET 3 OF 3										21	220	804			
CSJ: 0014-16-255 TOTAL	2,250	20,490		0	4		2			467	4,780	15,803	1,109	902	220
PHASE TOTAL	2,250	23,460		0	7		2			483	4,940	16,451	1,109	902	220

I. S. ENGINEERS, LLC
TBPE REG. # F-11657

Texas Department of Transportation
© 2012

IH 35W FROM NORTH TARRANT PKWY TO IH 820

QUANTITY SUMMARY
TRAFFIC CONTROL

SHEET 5 OF 33

DESIGN	FED.RD. DIV.NO.	FEDERAL AID PROJECT NO.		HIGHWAY NO.
SY	6	(SEE TITLE SHEET)		IH 35W
GRAPHICS ZS	STATE	DISTRICT	COUNTY	SHEET NO.
CHECK BV	TEXAS	FTW	TARRANT	63
CHECK MNM	CONTROL	SECTION	JOB	
	0014	16	255, ETC.	

FILENAME: S3BTCPSUM05.dgn

DRAWING DATE: 9/11/2012

SUMMARY OF TRAFFIC CONTROL ITEMS

TCP PHASE 1	662 2084	662 2085	662 2086	662 2087	662 2093	662 2094	662 2099	678 2001	678 2003	678 2004	678 2006	678 2009	678 2010	678 2013
	WK ZN PAV MRK REMOV (W) (ARROW)	WK ZN PAV MRK REMOV (W) (DBL ARROW)	WK ZN PAV MRK REMOV (W) (ENTR GORE)	WK ZN PAV MRK REMOV (W) (EXIT GORE)	WK ZN PAV MRK REMOV (W) (UTURN ARROW)	WK ZN PAV MRK REMOV (W) (WORD)	WK ZN PAV MRK REMOV (Y) 4" (SLD)	PAV SURF PREP FOR MRK (4")	PAV SURF PREP FOR MRK (8")	PAV SURF PREP FOR MRK (12")	PAV SURF PREP FOR MRK (24")	PAV SURF PREP FOR MRK (ENTR GORE)	PAV SURF PREP FOR MRK (EXIT GORE)	PAV SURF PREP FOR MRK (RPM)
	EA	EA	EA	EA	EA	EA	LF	LF	LF	LF	LF	EA	EA	EA
CSJ: 0081-12-045														
PHASE 1 STEP 2														
SHEET 1 OF 24								0	0	0	0	0	0	0
SHEET 2 OF 24							271	271	0	0	0	0	0	0
SHEET 3 OF 24				1				0	0	0	0	0	1	0
SHEET 4 OF 24							648	1,458	0	0	0	0	0	16
CSJ: 0081-12-045 TOTAL	0		0	1	0	0	919	1,729	0	0	0	0	1	16
CSJ: 0014-16-255														
PHASE 1 STEP 2														
SHEET 5 OF 24							786	1,772	0	0	0	0	0	19
SHEET 6 OF 24							793	1,816	0	0	0	0	0	22
SHEET 7 OF 24								0	0	0	0	0	0	0
SHEET 8 OF 24								0	0	0	0	0	0	0
SHEET 9 OF 24				1			1,054	2,582	0	0	0	0	1	49
SHEET 10 OF 24			1				1,626	3,596	0	0	0	1	0	68
SHEET 11 OF 24	5				2	7	3,932	3,743	1,109	902	220	0	0	78
SHEET 12 OF 24				1			2,405	2,988	0	0	0	0	1	58
SHEET 13 OF 24							2,563	4,433	0	0	0	0	0	0
SHEET 14 OF 24							1,200	2,437	0	0	0	0	1	30
SHEET 15 OF 24			1				597	746	0	0	0	0	1	14
SHEET 16 OF 24								0	0	0	0	0	0	0
SHEET 17 OF 24								0	0	0	0	0	0	0
SHEET 18 OF 24								0	0	0	0	0	0	0
SHEET 19 OF 24								0	0	0	0	0	0	0
SHEET 20 OF 24								0	0	0	0	0	0	0
SHEET 21 OF 24								0	0	0	0	0	0	0
SHEET 22 OF 24							585	1,316	0	0	0	0	0	14
SHEET 23 OF 24			1				1,200	2,769	0	0	0	1	0	36
SHEET 24 OF 24							1,255	1,553	0	0	0	1	0	30
PHASE 1 STEP 2B														
SHEET 1 OF 3								855	0	0	0	0	0	0
SHEET 2 OF 3				1			587	830	0	0	0	0	1	0
SHEET 3 OF 3							1,015	2,032	0	0	0	0	0	21
CSJ: 0014-16-255 TOTAL	5		3	3	2	7	19,598	40,171	1,109	902	220	3	3	467
PHASE TOTAL	5		3	4	2	7	20,517	41,898	1,109	902	220	3	4	483

FILENAME: S3BTCPSUM06.dgn

DRAWING DATE: 8/17/2012

I. S. ENGINEERS, LLC

TBPE REG. # F-11657

Texas Department of Transportation

© 2012

IH 35W FROM NORTH TARRANT PKWY TO IH 820

QUANTITY SUMMARY
TRAFFIC CONTROL

SHEET 6 OF 33

DESIGN	FED.RD. DIV.NO.	FEDERAL AID PROJECT NO.		HIGHWAY NO.
SY	6	(SEE TITLE SHEET)		IH 35W
GRAPHICS ZS	STATE	DISTRICT	COUNTY	SHEET NO.
CHECK BV	TEXAS	FTW	TARRANT	64
CHECK MNM	CONTROL	SECTION	JOB	
	0014	16	255, ETC.	

SUMMARY OF TRAFFIC CONTROL ITEMS

TCP PHASE 1		403 2001	464 2003	464 2005		465 2077	476 2001	479 2006	479 2007	508 2002	512 2008	512 2009	512 2026	512 2027	512 2035	512 2036
		TEMPORARY SPL SHORING	RC PIPE (CL III) (18 IN)	RC PIPE (CL III) (24 IN)		INLET (COMP) (DROP) (TY 1)	JACK BOR OR TUN PIPE (18 IN) (RC) (CL III)	ADJ INLET (CAP)	ADJ MANH (CAP)	CONSTRUCTION DETOURS	PORT CTB (FUR & INST) (LOW PROFILE) (TY 1)	PORT CTB (FUR & INST) (LOW PROFILE) (TY 2)	PORT CTB (MOVE) (LOW PROFILE) (TY 1)	PORT CTB (MOVE) (LOW PROFILE) (TY 2)	PORT CTB (STKPL) (LOW PROFILE) (TY 1)	PORT CTB (STKPL) (LOW PROFILE) (TY 2)
		SF	LF	LF		EA	EA	EA	EA	SY	LF	LF	LF	LF	LF	LF
CSJ: 0081-12-045																
PHASE 1 STEP 3																
SHEET 1 OF 24																
SHEET 2 OF 24		3,014								655						
SHEET 3 OF 24		1,422						1		471						
SHEET 4 OF 24																
CSJ: 0081-12-045 TOTAL		4,436	0					1		1,125						
CSJ: 0014-16-255																
PHASE 1 STEP 3																
SHEET 5 OF 24																
SHEET 6 OF 24																
SHEET 7 OF 24																
SHEET 8 OF 24																
SHEET 9 OF 24																
SHEET 10 OF 24																
SHEET 11 OF 24																
SHEET 12 OF 24																
SHEET 13 OF 24																
SHEET 14 OF 24		1,786														
SHEET 15 OF 24										919						
SHEET 16 OF 24																
SHEET 17 OF 24																
SHEET 18 OF 24																
SHEET 19 OF 24																
SHEET 20 OF 24																
SHEET 21 OF 24																
SHEET 22 OF 24																
SHEET 23 OF 24																
SHEET 24 OF 24			85													
CSJ: 0014-16-255 TOTAL		1,786	85					0		919						
PHASE TOTAL		6,222	85					1		2,045						

FILENAME: S3BTCPSUM07.dgn

DRAWING DATE: 8/20/2012

I. S. ENGINEERS, LLC

TBPE REG. # F-11657

Texas Department of Transportation

© 2012

IH 35W FROM NORTH TARRANT PKWY TO IH 820

QUANTITY SUMMARY
TRAFFIC CONTROL

SHEET 7 OF 33

DESIGN	FED.RD. DIV.NO.	FEDERAL AID PROJECT NO.		HIGHWAY NO.
SY	6	(SEE TITLE SHEET)		IH 35W
GRAPHICS ZS	STATE	DISTRICT	COUNTY	SHEET NO.
CHECK BV	TEXAS	FTW	TARRANT	65
CHECK MNM	CONTROL	SECTION	JOB	
	0014	16	255, ETC.	

SUMMARY OF TRAFFIC CONTROL ITEMS

TCP PHASE 1	512 2004 PORT CTB (FUR & INST) (SNGL SLP) (TY 1)	512 2022 PORT CTB (MOVE) (SNGL SLP) (TY 1)	512 2031 PORT CTB (STKPL) (SNGL SLP) TY 1)	545 2022 CRASH CUSH ATTEN (INSTL) (REACT) (N)	545 2023 CRASH CUSH ATTEN (MOVE&RESET) (REACT) (N)	545 2024 CRASH CUSH ATTEN (REMOVE) (REACT) (N)	545 2025 CRASH CUSH ATTEN (INSTL) (REACT) (W)	545 2026 CRASH CUSH ATTEN (MOVE&RESET) (REACT) (W)	545 2027 CRASH CUSH ATTEN (REMOVE) (REACT) (W)	662 2056 WK ZN PAV MRK REMOV (REFL) (TY II-C-R)	662 2064 WK ZN PAV MRK REMOV (W) 4" (BRK)	662 2067 WK ZN PAV MRK REMOV (W) 4" (SLD)	662 2075 WK ZN PAV MRK REMOV (W) 8" (SLD)	662 2077 WK ZN PAV MRK REMOV (W) 12" (SLD)	662 2079 WK ZN PAV MRK REMOV (W) 24" (SLD)
	LF	LF	LF	EA	EA	EA	EA	EA	EA	EA	LF	LF	LF	LF	LF
CSJ: 0081-12-045															
PHASE 1 STEP 3															
SHEET 1 OF 24															
SHEET 2 OF 24		1,080										145			
SHEET 3 OF 24		2,070										1,326			
SHEET 4 OF 24	480	660						1				1,257			
		0													
CSJ: 0081-12-045 TOTAL	480	3,810		0	0		0	1		0	0	2,728			
CSJ: 0014-16-255															
PHASE 1 STEP 3															
SHEET 5 OF 24		120										100			
SHEET 6 OF 24															
SHEET 7 OF 24															
SHEET 8 OF 24															
SHEET 9 OF 24															
SHEET 10 OF 24	1,170	510					1			52	528	1,063			
SHEET 11 OF 24	1,230											1,207			
SHEET 12 OF 24	1,200	870										2,393			
SHEET 13 OF 24	1,110	1,230										2,419			
SHEET 14 OF 24	1,650	570								31	330	1,534			
SHEET 15 OF 24										10	105	421			
SHEET 16 OF 24															
SHEET 17 OF 24															
SHEET 18 OF 24															
SHEET 19 OF 24															
SHEET 20 OF 24															
SHEET 21 OF 24															
SHEET 22 OF 24										14	146	585			
SHEET 23 OF 24		630								14	141	1,201			
SHEET 24 OF 24	510	720			1							728			
CSJ: 0014-16-255 TOTAL	6,870	4,650		0	1		1	0		121	1,250	11,651			
PHASE TOTAL	7,350	8,460		0	1		1	1		121	1,250	14,379			

I. S. ENGINEERS, LLC

TBPE REG. # F-11657

Texas Department of Transportation

© 2012

IH 35W FROM NORTH TARRANT PKWY TO IH 820

QUANTITY SUMMARY
TRAFFIC CONTROL

SHEET 8 OF 33

DESIGN	FED.RD. DIV.NO.	FEDERAL AID PROJECT NO.		HIGHWAY NO.
SY	6	(SEE TITLE SHEET)		IH 35W
GRAPHICS ZS	STATE	DISTRICT	COUNTY	SHEET NO.
CHECK BV	TEXAS	FTW	TARRANT	66
CHECK MNM	CONTROL	SECTION	JOB	
	0014	16	255, ETC.	

FILENAME: S3BTCPSUM08.dgn

DRAWING DATE: 8/17/2012

SUMMARY OF TRAFFIC CONTROL ITEMS

TCP PHASE 1	662 2084	662 2085	662 2086	662 2087	662 2093	662 2094	662 2099	678 2001	678 2003	678 2004	678 2006	678 2009	678 2010	678 2013
	WK ZN PAV MRK REMOV (W) (ARROW)	WK ZN PAV MRK REMOV (W) (DBL ARROW)	WK ZN PAV MRK REMOV (W) (ENTR GORE)	WK ZN PAV MRK REMOV (W) (EXIT GORE)	WK ZN PAV MRK REMOV (W) (UTURN ARROW)	WK ZN PAV MRK REMOV (W) (WORD)	WK ZN PAV MRK REMOV (Y) 4" (SLD)	PAV SURF PREP FOR MRK (4")	PAV SURF PREP FOR MRK (8")	PAV SURF PREP FOR MRK (12")	PAV SURF PREP FOR MRK (24")	PAV SURF PREP FOR MRK (ENTR GORE)	PAV SURF PREP FOR MRK (EXIT GORE)	PAV SURF PREP FOR MRK (RPM)
	EA	EA	EA	EA	EA	EA	LF	LF	LF	LF	LF	EA	EA	EA
CSJ: 0081-12-045														
PHASE 1 STEP 3														
SHEET 1 OF 24								0				0	0	0
SHEET 2 OF 24							187	332				0	0	0
SHEET 3 OF 24							952	2,278				0	0	0
SHEET 4 OF 24				1			886	2,143				0	1	0
CSJ: 0081-12-045 TOTAL			0	1			2,025	4,753				0	1	0
CSJ: 0014-16-255														
PHASE 1 STEP 3														
SHEET 5 OF 24								0				0	0	0
SHEET 6 OF 24								0				0	0	0
SHEET 7 OF 24								0				0	0	0
SHEET 8 OF 24								0				0	0	0
SHEET 9 OF 24								0				0	0	0
SHEET 10 OF 24				1			585	2,176				0	1	52
SHEET 11 OF 24				1			1,449	2,656				0	1	0
SHEET 12 OF 24							2,532	4,925				0	0	0
SHEET 13 OF 24							3,034	6,039				0	0	0
SHEET 14 OF 24			2				1,684	3,298				2	0	21
SHEET 15 OF 24							151	677				0	0	10
SHEET 16 OF 24								0				0	0	0
SHEET 17 OF 24								0				0	0	0
SHEET 18 OF 24								0				0	0	0
SHEET 19 OF 24								0				0	0	0
SHEET 20 OF 24								0				0	0	0
SHEET 21 OF 24								0				0	0	0
SHEET 22 OF 24							585	1,316				0	0	14
SHEET 23 OF 24			1				877	2,342				1	0	14
SHEET 24 OF 24							715	1,814				0	0	0
CSJ: 0014-16-255 TOTAL			3	2			11,612	25,243				3	2	111
PHASE TOTAL			3	3			13,637	29,996				3	3	111

I. S. ENGINEERS, LLC

TBPE REG. # F-11657

Texas Department of Transportation

© 2012

IH 35W FROM NORTH TARRANT PKWY TO IH 820

QUANTITY SUMMARY
TRAFFIC CONTROL

SHEET 9 OF 33

DESIGN	FED.RD. DIV.NO.	FEDERAL AID PROJECT NO.		HIGHWAY NO.
SY	6	(SEE TITLE SHEET)		IH 35W
GRAPHICS ZS	STATE	DISTRICT	COUNTY	SHEET NO.
CHECK BV	TEXAS	FTW	TARRANT	67
CHECK MNM	CONTROL	SECTION	JOB	
	0014	16	255, ETC.	

FILENAME: S3BTCPSUM09.dgn

DRAWING DATE: 8/17/2012

SUMMARY OF TRAFFIC CONTROL ITEMS

TCP PHASE 2		403 2001	464 2003	464 2005		465 2077	476 2001	479 2006	479 2007	508 2002	512 2008	512 2009	512 2026		512 2035	512 2036
		TEMPORARY SPL SHORING	RC PIPE (CL III) (18 IN)	RC PIPE (CL III) (24 IN)		INLET (COMP) (DROP) (TY 1)	JACK BOR OR TUN PIPE (18 IN) (RC) (CL III)	ADJ INLET (CAP)	ADJ MANH (CAP)	CONSTRUCTION DETOURS	PORT CTB (FUR & INST) (LOW PROFILE) (TY 1)	PORT CTB (FUR & INST) (LOW PROFILE) (TY 2)	PORT CTB (MOVE) (LOW PROFILE) (TY 1)		PORT CTB (STKPL) (LOW PROFILE) (TY 1)	PORT CTB (STKPL) (LOW PROFILE) (TY 2)
		SF	LF	LF		EA	EA	EA	EA	SY	LF	LF	LF		LF	LF
CSJ: 0081-12-045																
PHASE 2 STEP 1																
SHEET 1 OF 24																
SHEET 2 OF 24																
SHEET 3 OF 24																
SHEET 4 OF 24																
CSJ: 0081-12-045 TOTAL		0	0			0				0		0	0	0		0
CSJ: 0014-16-255																
PHASE 2 STEP 1																
SHEET 5 OF 24																
SHEET 6 OF 24																
SHEET 7 OF 24																
SHEET 8 OF 24																
SHEET 9 OF 24																
SHEET 10 OF 24																
SHEET 11 OF 24																
SHEET 12 OF 24																
SHEET 13 OF 24													660	40		
SHEET 14 OF 24		3,780								135				20		
SHEET 15 OF 24		5,845	34			1						160	1,320	80		
SHEET 16 OF 24		1,257	40							893		20				
SHEET 17 OF 24																
SHEET 18 OF 24												20	840			
SHEET 19 OF 24										2,069		40	1,000			
SHEET 20 OF 24												20	20			
SHEET 21 OF 24																
SHEET 22 OF 24																
SHEET 23 OF 24																
SHEET 24 OF 24																
PHASE 2 STEP 1B																
SHEET 1 OF 2																60
SHEET 2 OF 2													860	140		
PHASE 2 STEP 1C																
SHEET 1 OF 2																
SHEET 2 OF 2													1,040	180		
CSJ: 0014-16-255 TOTAL		10,882	74			1				3,096		260	5,740	460		60
PHASE TOTAL		10,882	74			1				3,096		260	5,740	460		60

I. S. ENGINEERS, LLC

TBPE REG. # F-11657

Texas Department of Transportation
© 2012

IH 35W FROM NORTH TARRANT PKWY TO IH 820

QUANTITY SUMMARY
TRAFFIC CONTROL

SHEET 10 OF 33

DESIGN	FED.RD. DIV.NO.	FEDERAL AID PROJECT NO.		HIGHWAY NO.
SY	6	(SEE TITLE SHEET)		IH 35W
GRAPHICS	STATE	DISTRICT	COUNTY	SHEET NO.
ZS	TEXAS	FTW	TARRANT	68
CHECK	CONTROL	SECTION	JOB	
BV	0014	16	255, ETC.	
CHECK				
MNM				

FILENAME: S3BTCPSUM10.dgn

DRAWING DATE: 8/20/2012

SUMMARY OF TRAFFIC CONTROL ITEMS

TCP PHASE 2	512 2004 PORT CTB (FUR & INST) (SNGL SLP) (TY 1)	512 2022 PORT CTB (MOVE) (SNGL SLP) (TY 1)	512 2031 PORT CTB (STKPL) (SNGL SLP) (TY 1)	545 2022 CRASH CUSH ATTEN (INSTL) (REACT) (N)	545 2023 CRASH CUSH ATTEN (MOVE&RESET) (REACT) (N)	545 2024 CRASH CUSH ATTEN (REMOVE) (REACT) (N)	545 2025 CRASH CUSH ATTEN (INSTL) (REACT) (W)	545 2026 CRASH CUSH ATTEN (MOVE&RESET) (REACT) (W)	545 2027 CRASH CUSH ATTEN (REMOVE) (REACT) (W)	662 2056 WK ZN PAV MRK REMOV (REFL) (TY II-C-R)	662 2064 WK ZN PAV MRK REMOV (W) 4" (BRK)	662 2067 WK ZN PAV MRK REMOV (W) 4" (SLD)	662 2075 WK ZN PAV MRK REMOV (W) 8" (SLD)	662 2077 WK ZN PAV MRK REMOV (W) 12" (SLD)	662 2079 WK ZN PAV MRK REMOV (W) 24" (SLD)
	LF	LF	LF	EA	EA	EA	EA	EA	EA	EA	LF	LF	LF	LF	LF
CSJ: 0081-12-045															
PHASE 2 STEP 1															
SHEET 1 OF 24															
SHEET 2 OF 24												670			
SHEET 3 OF 24		990										794			
SHEET 4 OF 24															
CSJ: 0081-12-045 TOTAL	0	990		0	0					0	0	1,464			
CSJ: 0014-16-255															
PHASE 2 STEP 1															
SHEET 5 OF 24															
SHEET 6 OF 24															
SHEET 7 OF 24															
SHEET 8 OF 24															
SHEET 9 OF 24															
SHEET 10 OF 24															
SHEET 11 OF 24															
SHEET 12 OF 24										5	50				
SHEET 13 OF 24										28	280				
SHEET 14 OF 24	660	1,560			1					36	360				
SHEET 15 OF 24	240				2					105	1,070	826	1,122		
SHEET 16 OF 24	810	180								19	190	1,183			
SHEET 17 OF 24															
SHEET 18 OF 24	210									21	200				
SHEET 19 OF 24	1,140									30	300				
SHEET 20 OF 24										1	20				
SHEET 21 OF 24															
SHEET 22 OF 24															
SHEET 23 OF 24															
SHEET 24 OF 24															
PHASE 2 STEP 1B										6	60				
SHEET 1 OF 2										25	250	301			
SHEET 2 OF 2															
PHASE 2 STEP 1C										9	80	50			
SHEET 1 OF 2										80	800	356	230		
SHEET 2 OF 2															
CSJ: 0014-16-255 TOTAL	3,060	1,740		0	3					365	3,660	2,716	1,352		
PHASE TOTAL	3,060	2,730		0	3					365	3,660	4,180	1,352		

I. S. ENGINEERS, LLC

TBPE REG. # F-11657

Texas Department of Transportation
© 2012

IH 35W FROM NORTH TARRANT PKWY TO IH 820

QUANTITY SUMMARY
TRAFFIC CONTROL

SHEET 11 OF 33

DESIGN	FED.RD. DIV.NO.	FEDERAL AID PROJECT NO.		HIGHWAY NO.
SY	6	(SEE TITLE SHEET)		IH 35W
GRAPHICS ZS	STATE	DISTRICT	COUNTY	SHEET NO.
CHECK BV	TEXAS	FTW	TARRANT	69
CHECK MNM	CONTROL	SECTION	JOB	
	0014	16	255, ETC.	

FILENAME: S3BTCPSUM11.dgn

DRAWING DATE: 8/17/2012

SUMMARY OF TRAFFIC CONTROL ITEMS

TCP PHASE 2	662 2084	662 2085	662 2086	662 2087	662 2093	662 2094	662 2099	678 2001	678 2003	678 2004	678 2006	678 2009	678 2010	678 2013
	WK ZN PAV MRK REMOV (W) (ARROW)	WK ZN PAV MRK REMOV (W) (DBL ARROW)	WK ZN PAV MRK REMOV (W) (ENTR GORE)	WK ZN PAV MRK REMOV (W) (EXIT GORE)	WK ZN PAV MRK REMOV (W) (UTURN ARROW)	WK ZN PAV MRK REMOV (W) (WORD)	WK ZN PAV MRK REMOV (Y) 4" (SLD)	PAV SURF PREP FOR MRK (4")	PAV SURF PREP FOR MRK (8")	PAV SURF PREP FOR MRK (12")	PAV SURF PREP FOR MRK (24")	PAV SURF PREP FOR MRK (ENTR GORE)	PAV SURF PREP FOR MRK (EXIT GORE)	PAV SURF PREP FOR MRK (RPM)
	EA	EA	EA	EA	EA	EA	LF	LF	LF	LF	LF	EA	EA	EA
CSJ: 0081-12-045														
PHASE 2 STEP 1														
SHEET 1 OF 24								0				0		0
SHEET 2 OF 24							813	1,483				0		0
SHEET 3 OF 24							794	1,588				0		0
SHEET 4 OF 24								0				0		0
CSJ: 0081-12-045 TOTAL			0				1,607	3,071				0		0
CSJ: 0014-16-255														
PHASE 2 STEP 1														
SHEET 5 OF 24								0				0		0
SHEET 6 OF 24								0				0		0
SHEET 7 OF 24								0				0		0
SHEET 8 OF 24								0				0		0
SHEET 9 OF 24								0				0		0
SHEET 10 OF 24								0				0		0
SHEET 11 OF 24								0				0		0
SHEET 12 OF 24							219	269				0		5
SHEET 13 OF 24							616	896				0		28
SHEET 14 OF 24			1				689	1,049				1		36
SHEET 15 OF 24							1,215	3,111	1,122			0		105
SHEET 16 OF 24			1					1,373				1		19
SHEET 17 OF 24								0				0		0
SHEET 18 OF 24								200				0		21
SHEET 19 OF 24								300				0		30
SHEET 20 OF 24								20				0		1
SHEET 21 OF 24								0				0		0
SHEET 22 OF 24								0				0		0
SHEET 23 OF 24								0				0		0
SHEET 24 OF 24								0				0		0
PHASE 2 STEP 1B								60				0		6
SHEET 1 OF 2							690	1,241				0		25
SHEET 2 OF 2														
PHASE 2 STEP 1C								130				0		9
SHEET 1 OF 2							1283	2,439	230			0		80
SHEET 2 OF 2														
CSJ: 0014-16-255 TOTAL			2				4,712	11,088	1,352			2		365
PHASE TOTAL			2				6,319	14,159	1,352			2		365

I. S. ENGINEERS, LLC

TBPE REG. # F-11657

Texas Department of Transportation

© 2012

IH 35W FROM NORTH TARRANT PKWY TO IH 820

QUANTITY SUMMARY
TRAFFIC CONTROL

SHEET 12 OF 33

DESIGN	FED.RD. DIV.NO.	FEDERAL AID PROJECT NO.		HIGHWAY NO.
SY	6	(SEE TITLE SHEET)		IH 35W
GRAPHICS ZS	STATE	DISTRICT	COUNTY	SHEET NO.
CHECK BV	TEXAS	FTW	TARRANT	70
CHECK	CONTROL	SECTION	JOB	
MNM	0014	16	255, ETC.	

DRAWING DATE: 8/17/2012 FILENAME: S3BTCPSUM12.dgn

SUMMARY OF TRAFFIC CONTROL ITEMS

TCP PHASE 2		403 2001	464 2003	464 2005		465 2077	476 2001	479 2006	479 2007	508 2002	512 2008	512 2009	512 2027	512 2027	512 2035	512 2036
		TEMPORARY SPL SHORING	RC PIPE (CL III) (18 IN)	RC PIPE (CL III) (24 IN)		INLET (COMP) (DROP) (TY 1)	JACK BOR OR TUN PIPE (18 IN) (RC) (CL III)	ADJ INLET (CAP)	ADJ MANH (CAP)	CONSTRUCTION DETOURS	PORT CTB (FUR & INST) (LOW PROFILE) (TY 1)	PORT CTB (FUR & INST) (LOW PROFILE) (TY 2)	PORT CTB (MOVE) (LOW PROFILE) (TY 2)	PORT CTB (MOVE) (LOW PROFILE) (TY 2)	PORT CTB (STKPL) (LOW PROFILE) (TY 1)	PORT CTB (STKPL) (LOW PROFILE) (TY 2)
		SF	LF	LF		EA	EA	EA	EA	SY	LF	LF	LF	LF	LF	LF
CSJ: 0081-12-045																
PHASE 2 STEP 2																
SHEET 1 OF 24																
SHEET 2 OF 24																
SHEET 3 OF 24																
SHEET 4 OF 24																
CSJ: 0081-12-045 TOTAL		0	0							0	0	0		0		0
CSJ: 0014-16-255																
PHASE 2 STEP 2																
SHEET 5 OF 24																
SHEET 6 OF 24																
SHEET 7 OF 24																
SHEET 8 OF 24																
SHEET 9 OF 24																
SHEET 10 OF 24		3,688														
SHEET 11 OF 24													460	20		
SHEET 12 OF 24																
SHEET 13 OF 24																40
SHEET 14 OF 24																
SHEET 15 OF 24		5,390											1800			40
SHEET 16 OF 24		1,351											2060	40		
SHEET 17 OF 24			10							8			280			
SHEET 18 OF 24										533	360		280			
SHEET 19 OF 24													800	20		
SHEET 20 OF 24											80		20	20		
SHEET 21 OF 24																
SHEET 22 OF 24																
SHEET 23 OF 24																
SHEET 24 OF 24																
PHASE 2 STEP 2B																
SHEET 1 OF 1											440			100		
CSJ: 0014-16-255 TOTAL		10,429	10							540	880	0	5700	200		80
PHASE TOTAL		10,429	10							540	880	0	5700	200		80

I. S. ENGINEERS, LLC

TBPE REG. # F-11657

Texas Department of Transportation

© 2012

IH 35W FROM NORTH TARRANT PKWY TO IH 820

QUANTITY SUMMARY
TRAFFIC CONTROL

SHEET 13 OF 33

DESIGN	FED.RD. DIV.NO.	FEDERAL AID PROJECT NO.		HIGHWAY NO.
SY	6	(SEE TITLE SHEET)		IH 35W
GRAPHICS ZS	STATE	DISTRICT	COUNTY	SHEET NO.
CHECK BV	TEXAS	FTW	TARRANT	71
CHECK MNM	CONTROL	SECTION	JOB	
	0014	16	255, ETC.	

FILENAME: S3BTCPSUM13.dgn

DRAWING DATE: 8/20/2012

SUMMARY OF TRAFFIC CONTROL ITEMS

TCP PHASE 2	512 2004 PORT CTB (FUR & INST) (SNGL SLP) (TY 1)	512 2022 PORT CTB (MOVE) (SNGL SLP) (TY 1)	512 2031 PORT CTB (STKPL) (SNGL SLP) (TY 1)	545 2022 CRASH CUSH ATTEN (INSTL) (REACT) (N)	545 2023 CRASH CUSH ATTEN (MOVE&RESET) (REACT) (N)	545 2024 CRASH CUSH ATTEN (REMOVE) (REACT) (N)	545 2025 CRASH CUSH ATTEN (INSTL) (REACT) (W)	545 2026 CRASH CUSH ATTEN (MOVE&RESET) (REACT) (W)	545 2027 CRASH CUSH ATTEN (REMOVE) (REACT) (W)	662 2056 WK ZN PAV MRK REMOV (REFL) (TY II-C-R)	662 2064 WK ZN PAV MRK REMOV (W) 4" (BRK)	662 2067 WK ZN PAV MRK REMOV (W) 4" (SLD)	662 2075 WK ZN PAV MRK REMOV (W) 8" (SLD)	662 2077 WK ZN PAV MRK REMOV (W) 12" (SLD)	662 2079 WK ZN PAV MRK REMOV (W) 24" (SLD)
	LF	LF	LF	EA	EA	EA	EA	EA	EA	EA	LF	LF	LF	LF	LF
CSJ: 0081-12-045															
PHASE 2 STEP 2															
SHEET 1 OF 24															
SHEET 2 OF 24		510										654			
SHEET 3 OF 24		1,050			1					19	190	79			
SHEET 4 OF 24										12	120	1,109			
CSJ: 0081-12-045 TOTAL	0	1,560		0	1					31	310	1,842			
CSJ: 0014-16-255															
PHASE 2 STEP 2															
SHEET 5 OF 24		480										1,247			
SHEET 6 OF 24															
SHEET 7 OF 24		1,110			1							1,215			
SHEET 8 OF 24															
SHEET 9 OF 24	150	540										1,915			
SHEET 10 OF 24	60	1,050			1					30	300	1,305			
SHEET 11 OF 24										3	30	677			
SHEET 12 OF 24															
SHEET 13 OF 24										20	210				
SHEET 14 OF 24		1,560			1					27	270	110			
SHEET 15 OF 24	390	240			1					50	490				
SHEET 16 OF 24												1,912			
SHEET 17 OF 24												2,400			
SHEET 18 OF 24	360	30		1								2,400			
SHEET 19 OF 24	300	630		1								2,106			
SHEET 20 OF 24												562			
SHEET 21 OF 24															
SHEET 22 OF 24															
SHEET 23 OF 24															
SHEET 24 OF 24															
PHASE 2 STEP 2B															
SHEET 1 OF 1										23	220				
CSJ: 0014-16-255 TOTAL	1,260	5,640		2	4					153	1,520	15,849			
PHASE TOTAL	1,260	7,200		2	5					184	1,830	17,691			

I. S. ENGINEERS, LLC

TBPE REG. # F-11657

Texas Department of Transportation

© 2012

IH 35W FROM NORTH TARRANT PKWY TO IH 820

QUANTITY SUMMARY
TRAFFIC CONTROL

SHEET 14 OF 33

DESIGN	FED.RD. DIV.NO.	FEDERAL AID PROJECT NO.		HIGHWAY NO.
SY	6	(SEE TITLE SHEET)		IH 35W
GRAPHICS ZS	STATE	DISTRICT	COUNTY	SHEET NO.
CHECK BV	TEXAS	FTW	TARRANT	72
CHECK MNM	CONTROL	SECTION	JOB	
	0014	16	255, ETC.	

SUMMARY OF TRAFFIC CONTROL ITEMS

TCP PHASE 2	662 2084	662 2085	662 2086	662 2087	662 2093	662 2094	662 2099	678 2001	678 2003	678 2004	678 2006	678 2009	678 2010	678 2013
	WK ZN PAV MRK REMOV (W) (ARROW)	WK ZN PAV MRK REMOV (W) (DBL ARROW)	WK ZN PAV MRK REMOV (W) (ENTR GORE)	WK ZN PAV MRK REMOV (W) (EXIT GORE)	WK ZN PAV MRK REMOV (W) (UTURN ARROW)	WK ZN PAV MRK REMOV (W) (WORD)	WK ZN PAV MRK REMOV (Y) 4" (SLD)	PAV SURF PREP FOR MRK (4")	PAV SURF PREP FOR MRK (8")	PAV SURF PREP FOR MRK (12")	PAV SURF PREP FOR MRK (24")	PAV SURF PREP FOR MRK (ENTR GORE)	PAV SURF PREP FOR MRK (EXIT GORE)	PAV SURF PREP FOR MRK (RPM)
	EA	EA	EA	EA	EA	EA	LF	LF	LF	LF	LF	EA	EA	EA
CSJ: 0081-12-045														
PHASE 2 STEP 2														
SHEET 1 OF 24								0				0	0	0
SHEET 2 OF 24								654				0	0	0
SHEET 3 OF 24			1	1			1,172	1,441				1	1	19
SHEET 4 OF 24			1				806	2,035				1	0	12
CSJ: 0081-12-045 TOTAL			2	1			1,978	4,130				2	1	31
CSJ: 0014-16-255														
PHASE 2 STEP 2														
SHEET 5 OF 24							1,247	2,494				0	0	0
SHEET 6 OF 24								0				0	0	0
SHEET 7 OF 24							1,215	2,430				0	0	0
SHEET 8 OF 24								0				0	0	0
SHEET 9 OF 24				1			1,290	3,205				0	1	0
SHEET 10 OF 24							0	1,605				0	0	30
SHEET 11 OF 24							461	1,168				0	0	3
SHEET 12 OF 24							111	111				0	0	0
SHEET 13 OF 24							1,200	1,410				0	0	20
SHEET 14 OF 24			1				882	1,262				1	0	27
SHEET 15 OF 24							841	1,331				0	0	50
SHEET 16 OF 24			1	1			2,828	4,740				1	1	0
SHEET 17 OF 24							2,400	4,800				0	0	0
SHEET 18 OF 24							1,773	4,173				0	0	0
SHEET 19 OF 24			1				1,488	3,594				1	0	0
SHEET 20 OF 24								562				0	0	0
SHEET 21 OF 24								0				0	0	0
SHEET 22 OF 24								0				0	0	0
SHEET 23 OF 24								0				0	0	0
SHEET 24 OF 24								0				0	0	0
PHASE 2 STEP 2B														
SHEET 1 OF 1							286	506				0	0	23
CSJ: 0014-16-255 TOTAL			3	2			16,022	33,391				3	2	153
PHASE TOTAL			5	3			18,000	37,521				5	3	184

I. S. ENGINEERS, LLC

TBPE REG. # F-11657

Texas Department of Transportation

© 2012

IH 35W FROM NORTH TARRANT PKWY TO IH 820

QUANTITY SUMMARY
TRAFFIC CONTROL

SHEET 15 OF 33

DESIGN	FED.RD. DIV.NO.	FEDERAL AID PROJECT NO.		HIGHWAY NO.
SY	6	(SEE TITLE SHEET)		IH 35W
GRAPHICS ZS	STATE	DISTRICT	COUNTY	SHEET NO.
CHECK BV	TEXAS	FTW	TARRANT	73
CHECK MNM	CONTROL	SECTION	JOB	
	0014	16	255, ETC.	

SUMMARY OF TRAFFIC CONTROL ITEMS

TCP PHASE 2		403 2001	464 2003	464 2005		465 2077	476 2001	479 2006	479 2007	508 2002	512 2008	512 2009	512 2026	512 2027	512 2035	512 2036
		TEMPORARY SPL SHORING	RC PIPE (CL III) (18 IN)	RC PIPE (CL III) (24 IN)		INLET (COMP) (DROP) (TY 1)	JACK BOR OR TUN PIPE (18 IN) (RC) (CL III)	ADJ INLET (CAP)	ADJ MANH (CAP)	CONSTRUCTION DETOURS	PORT CTB (FUR & INST) (LOW PROFILE) (TY 1)	PORT CTB (FUR & INST) (LOW PROFILE) (TY 2)	PORT CTB (MOVE) (LOW PROFILE) (TY 1)	PORT CTB (MOVE) (LOW PROFILE) (TY 2)	PORT CTB (STKPL) (LOW PROFILE) (TY 1)	PORT CTB (STKPL) (LOW PROFILE) (TY 2)
		SF	LF	LF		EA	EA	EA	EA	SY	LF	LF	LF	LF	LF	LF
CSJ: 0081-12-045																
PHASE 2 STEP 3																
SHEET 1 OF 24																
SHEET 2 OF 24										253			880	20		
SHEET 3 OF 24																
SHEET 4 OF 24																
CSJ: 0081-12-045 TOTAL		0	0	0				0		253			880	20	0	
CSJ: 0014-16-255																
PHASE 2 STEP 3																
SHEET 5 OF 24																
SHEET 6 OF 24				85						1,233						
SHEET 7 OF 24																
SHEET 8 OF 24																
SHEET 9 OF 24																
SHEET 10 OF 24				84				1								
SHEET 11 OF 24															460	
SHEET 12 OF 24																
SHEET 13 OF 24																
SHEET 14 OF 24		2,080														
SHEET 15 OF 24		7,050	240										1,340	200	140	
SHEET 16 OF 24			166										1,140			
SHEET 17 OF 24																
SHEET 18 OF 24																
SHEET 19 OF 24			250							699			420			
SHEET 20 OF 24										32			120	20		
SHEET 21 OF 24																
SHEET 22 OF 24																
SHEET 23 OF 24																
SHEET 24 OF 24										211						
PHASE 2 STEP 3B																
SHEET 1 OF 3																
SHEET 2 OF 3																
SHEET 3 OF 3																
CSJ: 0014-16-255 TOTAL		9,130	656	169				1		2,175			3,020	220	600	
PHASE TOTAL		9,130	656	169				1		2,429			3,900	240	600	

I. S. ENGINEERS, LLC

TBPE REG. # F-11657

Texas Department of Transportation
© 2012

IH 35W FROM NORTH TARRANT PKWY TO IH 820

QUANTITY SUMMARY
TRAFFIC CONTROL

SHEET 16 OF 33

DESIGN	FED.RD. DIV.NO.	FEDERAL AID PROJECT NO.		HIGHWAY NO.
SY	6	(SEE TITLE SHEET)		IH 35W
GRAPHICS	STATE	DISTRICT	COUNTY	SHEET NO.
ZS	TEXAS	FTW	TARRANT	74
CHECK	CONTROL	SECTION	JOB	
BV	0014	16	255, ETC.	
CHECK				
MNM				

DRAWING DATE: 8/20/2012 FILENAME: S3BTCPSUM16.dgn

SUMMARY OF TRAFFIC CONTROL ITEMS

TCP PHASE 2	512 2004 PORT CTB (FUR & INST) (SNGL SLP) (TY 1)	512 2022 PORT CTB (MOVE) (SNGL SLP) (TY 1)	512 2031 PORT CTB (STKPL) (SNGL SLP) (TY 1)	545 2022 CRASH CUSH ATTEN (INSTL) (REACT) (N)	545 2023 CRASH CUSH ATTEN (MOVE&RESET) (REACT) (N)	545 2024 CRASH CUSH ATTEN (REMOVE) (REACT) (N)	545 2025 CRASH CUSH ATTEN (INSTL) (REACT) (W)	545 2026 CRASH CUSH ATTEN (MOVE&RESET) (REACT) (W)	545 2027 CRASH CUSH ATTEN (REMOVE) (REACT) (W)	662 2056 WK ZN PAV MRK REMOV (REFL) (TY II-C-R)	662 2064 WK ZN PAV MRK REMOV (W) 4" (BRK)	662 2067 WK ZN PAV MRK REMOV (W) 4" (SLD)	662 2075 WK ZN PAV MRK REMOV (W) 8" (SLD)	662 2077 WK ZN PAV MRK REMOV (W) 12" (SLD)	662 2079 WK ZN PAV MRK REMOV (W) 24" (SLD)
	LF	LF	LF	EA	EA	EA	EA	EA	EA	EA	LF	LF	LF	LF	LF
CSJ: 0081-12-045															
PHASE 2 STEP 3															
SHEET 1 OF 24															
SHEET 2 OF 24															
SHEET 3 OF 24															
SHEET 4 OF 24															
CSJ: 0081-12-045 TOTAL	0	0			0		0			0	0	0			
CSJ: 0014-16-255															
PHASE 2 STEP 3															
SHEET 5 OF 24															
SHEET 6 OF 24		840			1					17	170				
SHEET 7 OF 24	960														
SHEET 8 OF 24										30	300				
SHEET 9 OF 24	1,320	300								30	300				
SHEET 10 OF 24	360									30	310	711			
SHEET 11 OF 24										41	420				
SHEET 12 OF 24															
SHEET 13 OF 24															
SHEET 14 OF 24	150	1,710								21	220				
SHEET 15 OF 24	3,540									56	560				
SHEET 16 OF 24	1,500				1					44	450	335			
SHEET 17 OF 24	1,800									27	270	1,219			
SHEET 18 OF 24	1,320	390					1			30	300	520			
SHEET 19 OF 24	1,200									19	197	98			
SHEET 20 OF 24	330			1								47			
SHEET 21 OF 24															
SHEET 22 OF 24															
SHEET 23 OF 24															
SHEET 24 OF 24	480									31	316				
PHASE 2 STEP 3B															
SHEET 1 OF 3	120	780										114			
SHEET 2 OF 3	150				1							1,232			
SHEET 3 OF 3	90	540					1					1,322			
CSJ: 0014-16-255 TOTAL	13,320	4,560			3		2			376	3,813	5,598			
				1											
PHASE TOTAL	13,320	4,560		1	3		2			376	3,813	5,598			

I. S. ENGINEERS, LLC

TBPE REG. # F-11657

Texas Department of Transportation

© 2012

IH 35W FROM NORTH TARRANT PKWY TO IH 820

QUANTITY SUMMARY
TRAFFIC CONTROL

SHEET 17 OF 33

DESIGN	FED.RD. DIV.NO.	FEDERAL AID PROJECT NO.		HIGHWAY NO.
SY	6	(SEE TITLE SHEET)		IH 35W
GRAPHICS ZS	STATE	DISTRICT	COUNTY	SHEET NO.
CHECK BV	TEXAS	FTW	TARRANT	75
CHECK MNM	CONTROL	SECTION	JOB	
	0014	16	255, ETC.	

FILENAME: S3BTCPSUM17.dgn

DRAWING DATE: 8/17/2012

SUMMARY OF TRAFFIC CONTROL ITEMS

TCP PHASE 2	662 2084	662 2085	662 2086	662 2087	662 2093	662 2094	662 2099	678 2001	678 2003	678 2004	678 2006	678 2009	678 2010	678 2013
	WK ZN PAV MRK REMOV (W) (ARROW)	WK ZN PAV MRK REMOV (W) (DBL ARROW)	WK ZN PAV MRK REMOV (W) (ENTR GORE)	WK ZN PAV MRK REMOV (W) (EXIT GORE)	WK ZN PAV MRK REMOV (W) (UTURN ARROW)	WK ZN PAV MRK REMOV (W) (WORD)	WK ZN PAV MRK REMOV (Y) 4" (SLD)	PAV SURF PREP FOR MRK (4")	PAV SURF PREP FOR MRK (8")	PAV SURF PREP FOR MRK (12")	PAV SURF PREP FOR MRK (24")	PAV SURF PREP FOR MRK (ENTR GORE)	PAV SURF PREP FOR MRK (EXIT GORE)	PAV SURF PREP FOR MRK (RPM)
	EA	EA	EA	EA	EA	EA	LF	LF	LF	LF	LF	EA	EA	EA
CSJ: 0081-12-045														
PHASE 2 STEP 3														
SHEET 1 OF 24								0				0	0	0
SHEET 2 OF 24								0				0	0	0
SHEET 3 OF 24								0				0	0	0
SHEET 4 OF 24								0				0	0	0
CSJ: 0081-12-045 TOTAL		0	0	0			0	0				0	0	0
CSJ: 0014-16-255														
PHASE 2 STEP 3														
SHEET 5 OF 24								0				0	0	0
SHEET 6 OF 24							893	1,063				0	0	17
SHEET 7 OF 24								0				0	0	0
SHEET 8 OF 24								300				0	0	30
SHEET 9 OF 24								300				0	0	30
SHEET 10 OF 24							1,288	2,309				0	0	30
SHEET 11 OF 24		4	1					420				1	0	41
SHEET 12 OF 24								0				0	0	0
SHEET 13 OF 24								0				0	0	0
SHEET 14 OF 24								220				0	0	21
SHEET 15 OF 24							526	1,086				0	0	56
SHEET 16 OF 24			1				1,039	1,824				1	0	44
SHEET 17 OF 24							1,218	2,707				0	0	27
SHEET 18 OF 24				1			255	1,075				0	1	30
SHEET 19 OF 24							98	393				0	0	19
SHEET 20 OF 24							639	686				0	0	0
SHEET 21 OF 24								0				0	0	0
SHEET 22 OF 24								0				0	0	0
SHEET 23 OF 24								0				0	0	0
SHEET 24 OF 24							954	1,270				0	0	31
PHASE 2 STEP 3B														
SHEET 1 OF 3			1				895	1,009				1	0	0
SHEET 2 OF 3							1,232	2,464				0	0	0
SHEET 3 OF 3				1			567	1,889				0	1	0
CSJ: 0014-16-255 TOTAL		4	3	2			9,604	19,015				3	2	376
PHASE TOTAL		4	3	2			9,604	19,015				3	2	376

I. S. ENGINEERS, LLC

TBPE REG. # F-11657

Texas Department of Transportation

© 2012

IH 35W FROM NORTH TARRANT PKWY TO IH 820

QUANTITY SUMMARY
TRAFFIC CONTROL

SHEET 18 OF 33

DESIGN	FED.RD. DIV.NO.	FEDERAL AID PROJECT NO.		HIGHWAY NO.
SY	6	(SEE TITLE SHEET)		IH 35W
GRAPHICS ZS	STATE	DISTRICT	COUNTY	SHEET NO.
CHECK BV	TEXAS	FTW	TARRANT	76
CHECK MNM	CONTROL	SECTION	JOB	
	0014	16	255, ETC.	

FILENAME: S3BTCPSUM18.dgn

DRAWING DATE: 8/17/2012

SUMMARY OF TRAFFIC CONTROL ITEMS

TCP PHASE 3		403 2001	464 2003	464 2005		465 2077	476 2001	479 2006	479 2007	508 2002	512 2008	512 2009	512 2026	512 2027	512 2035	512 2036
		TEMPORARY SPL SHORING	RC PIPE (CL III) (18 IN)	RC PIPE (CL III) (24 IN)		INLET (COMP) (DROP) (TY 1)	JACK BOR OR TUN PIPE (18 IN) (RC) (CL III)	ADJ INLET (CAP)	ADJ MANH (CAP)	CONSTRUCTION DETOURS	PORT CTB (FUR & INST) (LOW PROFILE) (TY 1)	PORT CTB (FUR & INST) (LOW PROFILE) (TY 2)	PORT CTB (MOVE) (LOW PROFILE) (TY 1)	PORT CTB (MOVE) (LOW PROFILE) (TY 2)	PORT CTB (STKPL) (LOW PROFILE) (TY 1)	PORT CTB (STKPL) (LOW PROFILE) (TY 2)
		SF	LF	LF		EA	EA	EA	EA	SY	LF	LF	LF	LF	LF	LF
CSJ: 0081-12-045																
PHASE 3 STEP 1																
SHEET 1 OF 24		3,510														
SHEET 2 OF 24		6,826	30							1,135			1,140	40		
SHEET 3 OF 24																
SHEET 4 OF 24																
CSJ: 0081-12-045 TOTAL		10336	30	0		0				1135			1140	40	0	0
CSJ: 0014-16-255																
PHASE 3 STEP 1																
SHEET 5 OF 24																
SHEET 6 OF 24				135		1										
SHEET 7 OF 24																
SHEET 8 OF 24										500						
SHEET 9 OF 24																
SHEET 10 OF 24																
SHEET 11 OF 24																
SHEET 12 OF 24																
SHEET 13 OF 24																
SHEET 14 OF 24																
SHEET 15 OF 24		3,301													1,220	160
SHEET 16 OF 24																
SHEET 17 OF 24													920			
SHEET 18 OF 24																
SHEET 19 OF 24													240			
SHEET 20 OF 24													40	20		
SHEET 21 OF 24																
SHEET 22 OF 24																
SHEET 23 OF 24																
SHEET 24 OF 24																
PHASE 3 STEP 1B																
SHEET 1 OF 2		6298														20
SHEET 2 OF 2		1685													860	
CSJ: 0014-16-255 TOTAL		11284	0	135		1				500			1200	20	2080	180
PHASE TOTAL		21,620	30	135		1				1,635			2,340	60	2,080	180

FILENAME: S3BTCPSUM19.dgn

DRAWING DATE: 8/20/2012

I. S. ENGINEERS, LLC

TBPE REG. # F-11657

Texas Department of Transportation

© 2012

IH 35W FROM NORTH TARRANT PKWY TO IH 820

QUANTITY SUMMARY
TRAFFIC CONTROL

SHEET 19 OF 33

DESIGN	FED.RD. DIV.NO.	FEDERAL AID PROJECT NO.		HIGHWAY NO.
SY	6	(SEE TITLE SHEET)		IH 35W
GRAPHICS	STATE	DISTRICT	COUNTY	SHEET NO.
ZS	TEXAS	FTW	TARRANT	77
CHECK	CONTROL	SECTION	JOB	
BV	0014	16	255, ETC.	
CHECK				
MNM				

SUMMARY OF TRAFFIC CONTROL ITEMS

TCP PHASE 3	512 2004 PORT CTB (FUR & INST) (SNGL SLP) (TY 1)	512 2022 PORT CTB (MOVE) (SNGL SLP) (TY 1)	512 2031 PORT CTB (STKPL) (SNGL SLP) (TY 1)	545 2022 CRASH CUSH ATTEN (INSTL) (REACT) (N)	545 2023 CRASH CUSH ATTEN (MOVE&RESET) (REACT) (N)	545 2024 CRASH CUSH ATTEN (REMOVE) (REACT) (N)	545 2025 CRASH CUSH ATTEN (INSTL) (REACT) (W)	545 2026 CRASH CUSH ATTEN (MOVE&RESET) (REACT) (W)	545 2027 CRASH CUSH ATTEN (REMOVE) (REACT) (W)	662 2056 WK ZN PAV MRK REMOV (REFL) (TY II-C-R)	662 2064 WK ZN PAV MRK REMOV (W) 4" (BRK)	662 2067 WK ZN PAV MRK REMOV (W) 4" (SLD)	662 2075 WK ZN PAV MRK REMOV (W) 8" (SLD)	662 2077 WK ZN PAV MRK REMOV (W) 12" (SLD)	662 2079 WK ZN PAV MRK REMOV (W) 24" (SLD)
	LF	LF	LF	EA	EA	EA	EA	EA	EA	EA	LF	LF	LF	LF	LF
CSJ: 0081-12-045															
PHASE 3 STEP 1															
SHEET 1 OF 24		720			1					21	220	866			
SHEET 2 OF 24		2,100			1					18	190	1,765			
SHEET 3 OF 24		420										314			
SHEET 4 OF 24															
CSJ: 0081-12-045 TOTAL		3240			2					39	410	2945		0	0
CSJ: 0014-16-255															
PHASE 3 STEP 1															
SHEET 5 OF 24										35	350	640			
SHEET 6 OF 24		2,400								4	40	1,131			
SHEET 7 OF 24										53	530	0			
SHEET 8 OF 24		450										441			
SHEET 9 OF 24		480								31	310	220			
SHEET 10 OF 24		120								3	30	128			
SHEET 11 OF 24															
SHEET 12 OF 24															
SHEET 13 OF 24												93			
SHEET 14 OF 24		690								107	1,070	718			
SHEET 15 OF 24		1,200								190	1,900	1,200		835	300
SHEET 16 OF 24		1,200								66	660	1,200			
SHEET 17 OF 24		2,100								30	300	1,200			
SHEET 18 OF 24		960								24	240	968			
SHEET 19 OF 24															
SHEET 20 OF 24															
SHEET 21 OF 24															
SHEET 22 OF 24															
SHEET 23 OF 24		1,080			1					38	380	60			
SHEET 24 OF 24		2,610			2					30	300	2,418			
PHASE 3 STEP 1B															
SHEET 1 OF 2		330			1										
SHEET 2 OF 2		330										193			
CSJ: 0014-16-255 TOTAL		13950			4					611	6110	10610		835	300
PHASE TOTAL		17,190			6					650	6,520	13,555		835	300

I. S. ENGINEERS, LLC

TBPE REG. # F-11657

Texas Department of Transportation

© 2012

IH 35W FROM NORTH TARRANT PKWY TO IH 820

QUANTITY SUMMARY
TRAFFIC CONTROL

SHEET 20 OF 33

DESIGN	FED.RD. DIV.NO.	FEDERAL AID PROJECT NO.		HIGHWAY NO.
SY	6	(SEE TITLE SHEET)		IH 35W
GRAPHICS ZS	STATE	DISTRICT	COUNTY	SHEET NO.
CHECK BV	TEXAS	FTW	TARRANT	78
CHECK MNM	CONTROL	SECTION	JOB	
	0014	16	255, ETC.	

FILENAME: S3BTCPSUM20.dgn

DRAWING DATE: 8/17/2012

SUMMARY OF TRAFFIC CONTROL ITEMS

TCP PHASE 3	662 2084	662 2085	662 2086	662 2087	662 2093	662 2094	662 2099	678 2001	678 2003	678 2004	678 2006	678 2009	678 2010	678 2013	465 2092
	WK ZN PAV MRK REMOV (W) (ARROW)	WK ZN PAV MRK REMOV (W) (DBL ARROW)	WK ZN PAV MRK REMOV (W) (ENTR GORE)	WK ZN PAV MRK REMOV (W) (EXIT GORE)	WK ZN PAV MRK REMOV (W) (UTURN ARROW)	WK ZN PAV MRK REMOV (W) (WORD)	WK ZN PAV MRK REMOV (Y) 4" (SLD)	PAV SURF PREP FOR MRK (4")	PAV SURF PREP FOR MRK (8")	PAV SURF PREP FOR MRK (12")	PAV SURF PREP FOR MRK (24")	PAV SURF PREP FOR MRK (ENTR GORE)	PAV SURF PREP FOR MRK (EXIT GORE)	PAV SURF PREP FOR MRK (RPM)	MANH (COMPL) (TY 1)
	EA	EA	EA	EA	EA	EA	LF	LF	LF	LF	LF	EA	EA	EA	EA
CSJ: 0081-12-045															
PHASE 3 STEP 1															
SHEET 1 OF 24				1			170	1,256		0	0	0	1	21	
SHEET 2 OF 24							2,192	4,147		0	0	0	0	18	
SHEET 3 OF 24			1					314		0	0	1	0	0	
SHEET 4 OF 24								0		0	0	0	0	0	
CSJ: 0081-12-045 TOTAL	0	0	1	1	0	0	2362	5717		0	0	1	1	39	0
CSJ: 0014-16-255															
PHASE 3 STEP 1															
SHEET 5 OF 24				1			1,079	2,069		0	0	0	1	35	
SHEET 6 OF 24							1,165	2,336		0	0	0	0	4	1
SHEET 7 OF 24			1				1,224	1,754		0	0	1	0	53	
SHEET 8 OF 24								441		0	0	0	0	0	
SHEET 9 OF 24							1,233	1,763		0	0	0	0	31	
SHEET 10 OF 24				1			479	637		0	0	0	1	3	
SHEET 11 OF 24								0		0	0	0	0	0	
SHEET 12 OF 24								0		0	0	0	0	0	
SHEET 13 OF 24							93	186		0	0	0	0	0	
SHEET 14 OF 24	2	1	2		1	3	1,553	3,341		0	0	2	0	107	
SHEET 15 OF 24	12	3			3	15	1,573	4,673		835	300	0	0	190	
SHEET 16 OF 24							1,557	3,417		0	0	0	0	66	
SHEET 17 OF 24							897	2,397		0	0	0	0	30	
SHEET 18 OF 24								1,208		0	0	0	0	24	
SHEET 19 OF 24								0		0	0	0	0	0	
SHEET 20 OF 24								0		0	0	0	0	0	
SHEET 21 OF 24								0		0	0	0	0	0	
SHEET 22 OF 24							450	450		0	0	0	0	0	
SHEET 23 OF 24			1				2,330	2,770		0	0	1	0	38	
SHEET 24 OF 24							2,190	4,908		0	0	0	0	30	
PHASE 3 STEP 1B															
SHEET 1 OF 2															
SHEET 2 OF 2							217								
CSJ: 0014-16-255 TOTAL	14	4	4	2	4	18	16040	32350		835	300	4	2	611	1
PHASE TOTAL	14	4	5	3	4	18	18,402	38,067		835	300	5	3	650	1

I. S. ENGINEERS, LLC
TBPE REG. # F-11657

Texas Department of Transportation
© 2012

IH 35W FROM NORTH TARRANT PKWY TO IH 820

QUANTITY SUMMARY
TRAFFIC CONTROL

SHEET 21 OF 33

DESIGN	FED.RD. DIV.NO.	FEDERAL AID PROJECT NO.		HIGHWAY NO.
SY	6	(SEE TITLE SHEET)		IH 35W
GRAPHICS ZS	STATE	DISTRICT	COUNTY	SHEET NO.
CHECK BV	TEXAS	FTW	TARRANT	79
CHECK MNM	CONTROL	SECTION	JOB	
	0014	16	255, ETC.	

FILENAME: S3BTCPSUM21.dgn
DRAWING DATE: 8/17/2012

SUMMARY OF TRAFFIC CONTROL ITEMS

TCP PHASE 3		403 2001 TEMPORARY SPL SHORING	464 2003 RC PIPE (CL III) (18 IN)	464 2005 RC PIPE (CL III) (24 IN)		465 2077 INLET (COMP) (DROP) (TY 1)	476 2001 JACK BOR OR TUN PIPE (18 IN) (RC) (CL III)	479 2006 ADJ INLET (CAP)	479 2007 ADJ MANH (CAP)	508 2002 CONSTRUCTION DETOURS	512 2008 PORT CTB (FUR & INST) (LOW PROFILE) (TY 1)	512 2009 PORT CTB (FUR & INST) (LOW PROFILE) (TY 2)	512 2026 PORT CTB (MOVE) (LOW PROFILE) (TY 1)	512 2027 PORT CTB (MOVE) (LOW PROFILE) (TY 2)	512 2035 PORT CTB (STKPL) (LOW PROFILE) (TY 1)	512 2036 PORT CTB (STKPL) (LOW PROFILE) (TY 2)
		SF	LF	LF		EA	EA	EA	EA	SY	LF	LF	LF	LF	LF	LF
CSJ: 0081-12-045																
PHASE 3 STEP 2																
SHEET 1 OF 24																
SHEET 2 OF 24													620	20		20
SHEET 3 OF 24																
SHEET 4 OF 24																
PHASE 3 STEP 2B																
SHEET 1 OF 8																
SHEET 2 OF 8		4023														
SHEET 3 OF 8		9,548														
SHEET 4 OF 8																
CSJ: 0081-12-045 TOTAL		13571								0			620	20		20
CSJ: 0014-16-255																
PHASE 3 STEP 2																
SHEET 5 OF 24																
SHEET 6 OF 24																
SHEET 7 OF 24																
SHEET 8 OF 24																
SHEET 9 OF 24																
SHEET 10 OF 24		4,302														
SHEET 11 OF 24		13,171														
SHEET 12 OF 24																
SHEET 13 OF 24																
SHEET 14 OF 24																
SHEET 15 OF 24																
SHEET 16 OF 24																
SHEET 17 OF 24																
SHEET 18 OF 24																
SHEET 19 OF 24																
SHEET 20 OF 24										1,441						
SHEET 21 OF 24										1,367						
SHEET 22 OF 24																
SHEET 23 OF 24																
SHEET 24 OF 24																
PHASE 3 STEP 2B																
SHEET 5 OF 8																
SHEET 6 OF 8																
SHEET 7 OF 8																
SHEET 8 OF 8																
CSJ: 0014-16-255 TOTAL		17473								2808			0	0		0
PHASE TOTAL		31,044								2,808			620	20		20

FILENAME: S3BTCPSUM22.dgn

DRAWING DATE: 8/20/2012

I. S. ENGINEERS, LLC

TBPE REG. # F-11657

Texas Department of Transportation

© 2012

IH 35W FROM NORTH TARRANT PKWY TO IH 820

QUANTITY SUMMARY
TRAFFIC CONTROL

SHEET 22 OF 33

DESIGN	FED.RD. DIV.NO.	FEDERAL AID PROJECT NO.		HIGHWAY NO.
SY	6	(SEE TITLE SHEET)		IH 35W
GRAPHICS ZS	STATE	DISTRICT	COUNTY	SHEET NO.
CHECK BV	TEXAS	FTW	TARRANT	80
CHECK MNM	CONTROL	SECTION	JOB	
	0014	16	255, ETC.	

SUMMARY OF TRAFFIC CONTROL ITEMS

TCP PHASE 3	512 2004 PORT CTB (FUR & INST) (SNGL SLP) (TY 1)	512 2022 PORT CTB (MOVE) (SNGL SLP) (TY 1)	512 2031 PORT CTB (STKPL) (SNGL SLP) (TY 1)	545 2022 CRASH CUSH ATTEN (INSTL) (REACT) (N)	545 2023 CRASH CUSH ATTEN (MOVE&RESET) (REACT) (N)	545 2024 CRASH CUSH ATTEN (REMOVE) (REACT) (N)	545 2025 CRASH CUSH ATTEN (INSTL) (REACT) (W)	545 2026 CRASH CUSH ATTEN (MOVE&RESET) (REACT) (W)	545 2027 CRASH CUSH ATTEN (REMOVE) (REACT) (W)	662 2056 WK ZN PAV MRK REMOV (REFL) (TY II-C-R)	662 2064 WK ZN PAV MRK REMOV (W) 4" (BRK)	662 2067 WK ZN PAV MRK REMOV (W) 4" (SLD)	662 2075 WK ZN PAV MRK REMOV (W) 8" (SLD)	662 2077 WK ZN PAV MRK REMOV (W) 12" (SLD)	662 2079 WK ZN PAV MRK REMOV (W) 24" (SLD)
	LF	LF	LF	EA	EA	EA	EA	EA	EA	EA	LF	LF	LF	LF	LF
CSJ: 0081-12-045															
PHASE 3 STEP 2															
SHEET 1 OF 24		600										683			
SHEET 2 OF 24		2,970						1	1			1,649			
SHEET 3 OF 24		2,580								10	100	2,230			
SHEET 4 OF 24	70	410										1,158			
PHASE 3 STEP 2B															
SHEET 1 OF 8															
SHEET 2 OF 8			120												
SHEET 3 OF 8			250							9	90	552			
SHEET 4 OF 8		1,380		1						8	80	1,148			
CSJ: 0081-12-045 TOTAL	70	7940	370	1	0			1	1	27	270	7420			
CSJ: 0014-16-255															
PHASE 3 STEP 2															
SHEET 5 OF 24															
SHEET 6 OF 24		1,830										923			
SHEET 7 OF 24															
SHEET 8 OF 24	390	630										649			
SHEET 9 OF 24									1						
SHEET 10 OF 24	330	540						1				685			
SHEET 11 OF 24		1,200										1,200			
SHEET 12 OF 24		1,200										1,200			
SHEET 13 OF 24		120										252			
SHEET 14 OF 24												0			
SHEET 15 OF 24															
SHEET 16 OF 24															
SHEET 17 OF 24															
SHEET 18 OF 24	330	570								8	80	331			
SHEET 19 OF 24	600	1,080								35	350	866			
SHEET 20 OF 24	1,110	0			1					2	20	0			
SHEET 21 OF 24	1,080	0		1	2										
SHEET 22 OF 24															
SHEET 23 OF 24															
SHEET 24 OF 24	180	1,860			1							550			
PHASE 3 STEP 2B															
SHEET 5 OF 8		420								2	30	431			
SHEET 6 OF 8		330													
SHEET 7 OF 8															
SHEET 8 OF 8															
CSJ: 0014-16-255 TOTAL	4020	9780	0	1	4			1	1	47	480	7087			
PHASE TOTAL	4,090	17,720	370	2	4			2	2	74	750	14,507			

I. S. ENGINEERS, LLC

TBPE REG. # F-11657

Texas Department of Transportation

© 2012

IH 35W FROM NORTH TARRANT PKWY TO IH 820

QUANTITY SUMMARY
TRAFFIC CONTROL

SHEET 23 OF 33

DESIGN	FED.RD. DIV.NO.	FEDERAL AID PROJECT NO.		HIGHWAY NO.
SY	6	(SEE TITLE SHEET)		IH 35W
GRAPHICS ZS	STATE	DISTRICT	COUNTY	SHEET NO.
CHECK BV	TEXAS	FTW	TARRANT	81
CHECK MNM	CONTROL	SECTION	JOB	
	0014	16	255, ETC.	

FILENAME: S3BTCPSUM23.dgn

DRAWING DATE: 8/20/2012

SUMMARY OF TRAFFIC CONTROL ITEMS

TCP PHASE 3	662 2084	662 2085	662 2086	662 2087	662 2093	662 2094	662 2099	678 2001	678 2003	678 2004	678 2006	678 2009	678 2010	678 2013	465 2092
	WK ZN PAV MRK REMOV (W) (ARROW)	WK ZN PAV MRK REMOV (W) (DBL ARROW)	WK ZN PAV MRK REMOV (W) (ENTR GORE)	WK ZN PAV MRK REMOV (W) (EXIT GORE)	WK ZN PAV MRK REMOV (W) (UTURN ARROW)	WK ZN PAV MRK REMOV (W) (WORD)	WK ZN PAV MRK REMOV (Y) 4" (SLD)	PAV SURF PREP FOR MRK (4")	PAV SURF PREP FOR MRK (8")	PAV SURF PREP FOR MRK (12")	PAV SURF PREP FOR MRK (24")	PAV SURF PREP FOR MRK (ENTR GORE)	PAV SURF PREP FOR MRK (EXIT GORE)	PAV SURF PREP FOR MRK (RPM)	MANH (COMPL) (TY 1)
	EA	EA	EA	EA	EA	EA	LF	LF	LF	LF	LF	EA	EA	EA	EA
CSJ: 0081-12-045															
PHASE 3 STEP 2															
SHEET 1 OF 24				1			0	683				0	1	0	
SHEET 2 OF 24			1	1			2,571	4,220				1	1	0	
SHEET 3 OF 24							1,203	3,533				0	0	10	
SHEET 4 OF 24							740	1,898				0	0	0	
PHASE 3 STEP 2B															
SHEET 1 OF 8								0				0	0	0	
SHEET 2 OF 8								0				0	0	0	
SHEET 3 OF 8				1			566	1,208				0	1	9	
SHEET 4 OF 8			1				750	1,978				1	0	8	
CSJ: 0081-12-045 TOTAL			2	3			5830	13520				2	3	27	
CSJ: 0014-16-255															
PHASE 3 STEP 2															
SHEET 5 OF 24								0				0	0	0	
SHEET 6 OF 24							923	1,846				0	0	0	
SHEET 7 OF 24								0				0	0	0	
SHEET 8 OF 24			1				363	1,012				1	0	0	
SHEET 9 OF 24								0				0	0	0	
SHEET 10 OF 24				1				685				0	1	0	
SHEET 11 OF 24								1,200				0	0	0	
SHEET 12 OF 24								1,200				0	0	0	
SHEET 13 OF 24								252				0	0	0	
SHEET 14 OF 24								0				0	0	0	
SHEET 15 OF 24								0				0	0	0	
SHEET 16 OF 24								0				0	0	0	
SHEET 17 OF 24							0	0				0	0	0	
SHEET 18 OF 24				1			0	411				0	1	8	
SHEET 19 OF 24			1				866	2,082				1	0	35	
SHEET 20 OF 24							53	73				0	0	2	
SHEET 21 OF 24								0				0	0	0	
SHEET 22 OF 24								0				0	0	0	
SHEET 23 OF 24								0				0	0	0	
SHEET 24 OF 24							1,586	2,136				0	0	0	
PHASE 3 STEP 2B															
SHEET 5 OF 8								461				0	0	2	
SHEET 6 OF 8								0				0	0	0	
SHEET 7 OF 8							47	47				0	0	0	
SHEET 8 OF 8							316	316				0	0	0	
CSJ: 0014-16-255 TOTAL			2	2			4154	11721				2	2	47	
PHASE TOTAL			4	5			9,984	25,241				4	5	74	

I. S. ENGINEERS, LLC

TBPE REG. # F-11657

Texas Department of Transportation

© 2012

IH 35W FROM NORTH TARRANT PKWY TO IH 820

QUANTITY SUMMARY
TRAFFIC CONTROL

SHEET 24 OF 33

DESIGN	FED.RD. DIV.NO.	FEDERAL AID PROJECT NO.		HIGHWAY NO.
SY	6	(SEE TITLE SHEET)		IH 35W
GRAPHICS ZS	STATE	DISTRICT	COUNTY	SHEET NO.
CHECK BV	TEXAS	FTW	TARRANT	82
CHECK MNM	CONTROL	SECTION	JOB	
	0014	16	255, ETC.	

FILENAME: S3BTCPSUM24.dgn

DRAWING DATE: 8/20/2012

SUMMARY OF TRAFFIC CONTROL ITEMS

TCP PHASE 4		403 2001	464 2003	464 2005		465 2077	476 2001	479 2006	479 2007	508 2002	512 2008	512 2009	512 2026	512 2027	512 2035	512 2036
		TEMPORARY SPL SHORING	RC PIPE (CL III) (18 IN)	RC PIPE (CL III) (24 IN)		INLET (COMP) (DROP) (TY 1)	JACK BOR OR TUN PIPE (18 IN) (RC) (CL III)	ADJ INLET (CAP)	ADJ MANH (CAP)	CONSTRUCTION DETOURS	PORT CTB (FUR & INST) (LOW PROFILE) (TY 1)	PORT CTB (FUR & INST) (LOW PROFILE) (TY 2)	PORT CTB (MOVE) (LOW PROFILE) (TY 1)	PORT CTB (MOVE) (LOW PROFILE) (TY 2)	PORT CTB (STKPL) (LOW PROFILE) (TY 1)	PORT CTB (STKPL) (LOW PROFILE) (TY 2)
		SF	LF	LF		EA	EA	EA	EA	SY	LF	LF	LF	LF	LF	LF
CSJ: 0081-12-045																
PHASE 4 STEP 1																
SHEET 1 OF 24		3,510														
SHEET 2 OF 24		12,989													620	
SHEET 3 OF 24		702								436						
SHEET 4 OF 24																
CSJ: 0081-12-045 TOTAL		17201								436			0	0	620	0
CSJ: 0014-16-255																
PHASE 4 STEP 1																
SHEET 5 OF 24																
SHEET 6 OF 24																
SHEET 7 OF 24																
SHEET 8 OF 24																
SHEET 9 OF 24																
SHEET 10 OF 24		5,107														
SHEET 11 OF 24		6,809											360	20		
SHEET 12 OF 24													60			
SHEET 13 OF 24																
SHEET 14 OF 24																
SHEET 15 OF 24		6,931													140	20
SHEET 16 OF 24															1,660	20
SHEET 17 OF 24															780	
SHEET 18 OF 24																
SHEET 19 OF 24																
SHEET 20 OF 24																
SHEET 21 OF 24																
SHEET 22 OF 24																
SHEET 23 OF 24																
SHEET 24 OF 24																
CSJ: 0014-16-255 TOTAL		18847								0			420	20	2580	40
PHASE TOTAL		36,048								436			420	20	3,200	40

I. S. ENGINEERS, LLC

TBPE REG. # F-11657

Texas Department of Transportation

© 2012

IH 35W FROM NORTH TARRANT PKWY TO IH 820

QUANTITY SUMMARY
TRAFFIC CONTROL

SHEET 25 OF 33

DESIGN	FED.RD. DIV.NO.	FEDERAL AID PROJECT NO.		HIGHWAY NO.
SY	6	(SEE TITLE SHEET)		IH 35W
GRAPHICS	STATE	DISTRICT	COUNTY	SHEET NO.
ZS	TEXAS	FTW	TARRANT	83
CHECK	CONTROL	SECTION	JOB	
BV	0014	16	255, ETC.	
CHECK				
MNM				

FILENAME: S3BTCPSUM25.dgn

DRAWING DATE: 8/20/2012

SUMMARY OF TRAFFIC CONTROL ITEMS

TCP PHASE 4	512 2004 PORT CTB (FUR & INST) (SNGL SLP) (TY 1)	512 2022 PORT CTB (MOVE) (SNGL SLP) (TY 1)	512 2031 PORT CTB (STKPL) (SNGL SLP) (TY 1)	545 2022 CRASH CUSH ATTEN (INSTL) (REACT) (N)	545 2023 CRASH CUSH ATTEN (MOVE&RESET) (REACT) (N)	545 2024 CRASH CUSH ATTEN (REMOVE) (REACT) (N)	545 2025 CRASH CUSH ATTEN (INSTL) (REACT) (W)	545 2026 CRASH CUSH ATTEN (MOVE&RESET) (REACT) (W)	545 2027 CRASH CUSH ATTEN (REMOVE) (REACT) (W)	662 2056 WK ZN PAV MRK REMOV (REFL) (TY II-C-R)	662 2064 WK ZN PAV MRK REMOV (W) 4" (BRK)	662 2067 WK ZN PAV MRK REMOV (W) 4" (SLD)	662 2075 WK ZN PAV MRK REMOV (W) 8" (SLD)	662 2077 WK ZN PAV MRK REMOV (W) 12" (SLD)	662 2079 WK ZN PAV MRK REMOV (W) 24" (SLD)
	LF	LF	LF	EA	EA	EA	EA	EA	EA	EA	LF	LF	LF	LF	LF
CSJ: 0081-12-045															
PHASE 4 STEP 1															
SHEET 1 OF 24		750								44	440	1,817			
SHEET 2 OF 24		2,580	1,020		1					81	810	2,853			
SHEET 3 OF 24		1,750	1,340		1					68	680	1,679			
SHEET 4 OF 24		0	2,310							30	300	1,200			
CSJ: 0081-12-045 TOTAL		5080	4670	0	2			0		223	2230	7549	0		
CSJ: 0014-16-255															
PHASE 4 STEP 1															
SHEET 5 OF 24			60												
SHEET 6 OF 24			3,600							30	300	1,882			
SHEET 7 OF 24															
SHEET 8 OF 24		210	1,380		1					60	600	1,200			
SHEET 9 OF 24		2,490			2					60	600	1,200			
SHEET 10 OF 24		2,820	960							95	950	1,800			
SHEET 11 OF 24		1,200	2,400							91	910	1,499	805		
SHEET 12 OF 24		1,200	2,400							98	980	2,400			
SHEET 13 OF 24		2,670	840		2					78	780	2,845			
SHEET 14 OF 24		2,310			1					60	600	3,440			
SHEET 15 OF 24		1,140	780							90	900	2,539			
SHEET 16 OF 24		1,920	240							120	1,200	3,070			
SHEET 17 OF 24		1,050			1					143	1,430	2,400			
SHEET 18 OF 24		2,220	240	1				1		144	1,440	2,801			
SHEET 19 OF 24		3,360								150	1,500	2,817			
SHEET 20 OF 24		2,100								60	600	1,774			
SHEET 21 OF 24		600	480		2					19	190	1,040			
SHEET 22 OF 24					1					11	110				
SHEET 23 OF 24		450	60							30	300				
SHEET 24 OF 24		570								31	310	990			
CSJ: 0014-16-255 TOTAL		26310	13440	1	10			1		1370	13700	33697	805		
PHASE TOTAL		31,390	18,110	1	12			1		1,593	15,930	41,246	805		

I. S. ENGINEERS, LLC

TBPE REG. # F-11657

Texas Department of Transportation

© 2012

IH 35W FROM NORTH TARRANT PKWY TO IH 820

QUANTITY SUMMARY
TRAFFIC CONTROL

SHEET 26 OF 33

DESIGN	FED.RD. DIV.NO.	FEDERAL AID PROJECT NO.		HIGHWAY NO.
SY	6	(SEE TITLE SHEET)		IH 35W
GRAPHICS ZS	STATE	DISTRICT	COUNTY	SHEET NO.
CHECK BV	TEXAS	FTW	TARRANT	84
CHECK MNM	CONTROL	SECTION	JOB	
	0014	16	255, ETC.	

SUMMARY OF TRAFFIC CONTROL ITEMS

TCP PHASE 4	662 2084	662 2085	662 2086	662 2087	662 2093	662 2094	662 2099	678 2001	678 2003	678 2004	678 2006	678 2009	678 2010	678 2013
	WK ZN PAV MRK REMOV (W) (ARROW)	WK ZN PAV MRK REMOV (W) (DBL ARROW)	WK ZN PAV MRK REMOV (W) (ENTR GORE)	WK ZN PAV MRK REMOV (W) (EXIT GORE)	WK ZN PAV MRK REMOV (W) (UTURN ARROW)	WK ZN PAV MRK REMOV (W) (WORD)	WK ZN PAV MRK REMOV (Y) 4" (SLD)	PAV SURF PREP FOR MRK (4")	PAV SURF PREP FOR MRK (8")	PAV SURF PREP FOR MRK (12")	PAV SURF PREP FOR MRK (24")	PAV SURF PREP FOR MRK (ENTR GORE)	PAV SURF PREP FOR MRK (EXIT GORE)	PAV SURF PREP FOR MRK (RPM)
	EA	EA	EA	EA	EA	EA	LF	LF	LF	LF	LF	EA	EA	EA
CSJ: 0081-12-045														
PHASE 4 STEP 1														
SHEET 1 OF 24							1,974	4,231	0			0	0	44
SHEET 2 OF 24			2	1			3,545	7,208	0			2	1	81
SHEET 3 OF 24				1			1,915	4,274	0			0	1	68
SHEET 4 OF 24							1,200	2,700	0			0	0	30
CSJ: 0081-12-045 TOTAL			2	2	0	0	8634	18413	0			2	2	223
CSJ: 0014-16-255														
PHASE 4 STEP 1														
SHEET 5 OF 24								0	0			0	0	0
SHEET 6 OF 24				1			1,860	4,042	0			0	1	30
SHEET 7 OF 24								0	0			0	0	0
SHEET 8 OF 24							1,200	3,000	0			0	0	60
SHEET 9 OF 24				1			1,264	3,064	0			0	1	60
SHEET 10 OF 24			1				2,441	5,191	0			1	0	95
SHEET 11 OF 24					1	2	1,920	4,329	805			0	0	91
SHEET 12 OF 24							2,400	5,780	0			0	0	98
SHEET 13 OF 24			1	2			2,740	6,365	0			1	2	78
SHEET 14 OF 24							3,445	7,485	0			0	0	60
SHEET 15 OF 24			1	1			2,496	5,935	0			1	1	90
SHEET 16 OF 24			1	1			3,569	7,839	0			1	1	120
SHEET 17 OF 24							2,400	6,230	0			0	0	143
SHEET 18 OF 24			1	1			2,930	7,171	0			1	1	144
SHEET 19 OF 24							2,817	7,134	0			0	0	150
SHEET 20 OF 24			1				1,715	4,089	0			1	0	60
SHEET 21 OF 24			1				1,058	2,288	0			1	0	19
SHEET 22 OF 24							452	562	0			0	0	11
SHEET 23 OF 24							1,200	1,500	0			0	0	30
SHEET 24 OF 24							1,220	2,520	0			0	0	31
CSJ: 0014-16-255 TOTAL			7	7	1	2	37127	84524	805			7	7	1370
PHASE TOTAL			9	9	1	2	45,761	102,937	805			9	9	1,593

I. S. ENGINEERS, LLC

TBPE REG. # F-11657

Texas Department of Transportation

© 2012

IH 35W FROM NORTH TARRANT PKWY TO IH 820

QUANTITY SUMMARY
TRAFFIC CONTROL

SHEET 27 OF 33

DESIGN	FED.RD. DIV.NO.	FEDERAL AID PROJECT NO.		HIGHWAY NO.
SY	6	(SEE TITLE SHEET)		IH 35W
GRAPHICS ZS	STATE	DISTRICT	COUNTY	SHEET NO.
CHECK BV	TEXAS	FTW	TARRANT	85
CHECK MNM	CONTROL	SECTION	JOB	
	0014	16	255, ETC.	

FILENAME: S3BTCPSUM27.dgn

DRAWING DATE: 8/20/2012

SUMMARY OF TRAFFIC CONTROL ITEMS

TCP PHASE 4		403 2001	464 2003	464 2005		465 2077	476 2001	479 2006	479 2007	508 2002	512 2008	512 2009	512 2026	512 2027	512 2035	512 2036
		TEMPORARY SPL SHORING	RC PIPE (CL III) (18 IN)	RC PIPE (CL III) (24 IN)		INLET (COMP) (DROP) (TY 1)	JACK BOR OR TUN PIPE (18 IN) (RC) (CL III)	ADJ INLET (CAP)	ADJ MANH (CAP)	CONSTRUCTION DETOURS	PORT CTB (FUR & INST) (LOW PROFILE) (TY 1)	PORT CTB (FUR & INST) (LOW PROFILE) (TY 2)	PORT CTB (MOVE) (LOW PROFILE) (TY 1)	PORT CTB (MOVE) (LOW PROFILE) (TY 2)	PORT CTB (STKPL) (LOW PROFILE) (TY 1)	PORT CTB (STKPL) (LOW PROFILE) (TY 2)
		SF	LF	LF		EA	EA	EA	EA	SY	LF	LF	LF	LF	LF	LF
CSJ: 0081-12-045																
PHASE 4 STEP 2																
SHEET 1 OF 24																
SHEET 2 OF 24																
SHEET 3 OF 24		9,920														
SHEET 4 OF 24																
CSJ: 0081-12-045 TOTAL		9920													0	0
CSJ: 0014-16-255																
PHASE 4 STEP 2																
SHEET 5 OF 24																
SHEET 6 OF 24																
SHEET 7 OF 24																
SHEET 8 OF 24																
SHEET 9 OF 24																
SHEET 10 OF 24																
SHEET 11 OF 24															360	20
SHEET 12 OF 24															60	
SHEET 13 OF 24																
SHEET 14 OF 24		5,554														
SHEET 15 OF 24																
SHEET 16 OF 24																
SHEET 17 OF 24																
SHEET 18 OF 24																
SHEET 19 OF 24																
SHEET 20 OF 24																
SHEET 21 OF 24																
SHEET 22 OF 24																
SHEET 23 OF 24																
SHEET 24 OF 24																
CSJ: 0014-16-255 TOTAL		5554													420	20
PHASE TOTAL		15,474													420	20

I. S. ENGINEERS, LLC

TBPE REG. # F-11657

Texas Department of Transportation

© 2012

IH 35W FROM NORTH TARRANT PKWY TO IH 820

QUANTITY SUMMARY
TRAFFIC CONTROL

SHEET 28 OF 33

DESIGN	FED.RD. DIV.NO.	FEDERAL AID PROJECT NO.		HIGHWAY NO.
SY	6	(SEE TITLE SHEET)		IH 35W
GRAPHICS ZS	STATE	DISTRICT	COUNTY	SHEET NO.
CHECK BV	TEXAS	FTW	TARRANT	86
CHECK MNM	CONTROL	SECTION	JOB	
	0014	16	255, ETC.	

DRAWING DATE: 8/20/2012 FILENAME: S3BTCPSUM28.dgn

SUMMARY OF TRAFFIC CONTROL ITEMS

TCP PHASE 4	512 2004 PORT CTB (FUR & INST) (SNGL SLP) (TY 1)	512 2022 PORT CTB (MOVE) (SNGL SLP) (TY 1)	512 2031 PORT CTB (STKPL) (SNGL SLP) (TY 1)	545 2022 CRASH CUSH ATTEN (INSTL) (REACT) (N)	545 2023 CRASH CUSH ATTEN (MOVE&RESET) (REACT) (N)	545 2024 CRASH CUSH ATTEN (REMOVE) (REACT) (N)	545 2025 CRASH CUSH ATTEN (INSTL) (REACT) (W)	545 2026 CRASH CUSH ATTEN (MOVE&RESET) (REACT) (W)	545 2027 CRASH CUSH ATTEN (REMOVE) (REACT) (W)	662 2056 WK ZN PAV MRK REMOV (REFL) (TY II-C-R)	662 2064 WK ZN PAV MRK REMOV (W) 4" (BRK)	662 2067 WK ZN PAV MRK REMOV (W) 4" (SLD)	662 2075 WK ZN PAV MRK REMOV (W) 8" (SLD)	662 2077 WK ZN PAV MRK REMOV (W) 12" (SLD)	662 2079 WK ZN PAV MRK REMOV (W) 24" (SLD)
	LF	LF	LF	EA	EA	EA	EA	EA	EA	EA	LF	LF	LF	LF	LF
CSJ: 0081-12-045															
PHASE 4 STEP 2															
SHEET 1 OF 24			1,260							45	450	1,449			
SHEET 2 OF 24			3,150		1					60	600	2,038			
SHEET 3 OF 24		720	1,000			1				19	190	725			
SHEET 4 OF 24						1									
CSJ: 0081-12-045 TOTAL		720	5410		1	2		0	0	124	1240	4212			
CSJ: 0014-16-255															
PHASE 4 STEP 2															
SHEET 5 OF 24															
SHEET 6 OF 24										22	220	860			
SHEET 7 OF 24															
SHEET 8 OF 24			210			1				53	530	1,200			
SHEET 9 OF 24			1,920			1				92	920	1,266			
SHEET 10 OF 24			2,100							61	610	1,249			
SHEET 11 OF 24										31	310	628			
SHEET 12 OF 24		390								5	50	686			
SHEET 13 OF 24		660	600			1						1,377			
SHEET 14 OF 24		1,950				1		1				1,200			
SHEET 15 OF 24		540								5	60	551			
SHEET 16 OF 24															
SHEET 17 OF 24		390	570												
SHEET 18 OF 24		1,200	1,080		1				1	29	290	775			
SHEET 19 OF 24		2,460								66	660	2,834			
SHEET 20 OF 24		2,280			2					6	60	2,470			
SHEET 21 OF 24												447			
SHEET 22 OF 24															
SHEET 23 OF 24															
SHEET 24 OF 24															
CSJ: 0014-16-255 TOTAL		9870	6480		3	4		1	1	370	3710	15543			
PHASE TOTAL		10,590	11,890		4	6		1	1	494	4,950	19,755			

I. S. ENGINEERS, LLC
TBPE REG. # F-11657

Texas Department of Transportation
© 2012

IH 35W FROM NORTH TARRANT PKWY TO IH 820

QUANTITY SUMMARY
TRAFFIC CONTROL

SHEET 29 OF 33

DESIGN	FED.RD. DIV.NO.	FEDERAL AID PROJECT NO.		HIGHWAY NO.
SY	6	(SEE TITLE SHEET)		IH 35W
GRAPHICS ZS	STATE	DISTRICT	COUNTY	SHEET NO.
CHECK BV	TEXAS	FTW	TARRANT	87
CHECK MNM	CONTROL	SECTION	JOB	
	0014	16	255, ETC.	

FILENAME: S3BTCPSUM29.dgn
DRAWING DATE: 8/20/2012

SUMMARY OF TRAFFIC CONTROL ITEMS

TCP PHASE 4	662 2084	662 2085	662 2086	662 2087	662 2093	662 2094	662 2099	678 2001	678 2003	678 2004	678 2006	678 2009	678 2010	678 2013
	WK ZN PAV MRK REMOV (W) (ARROW)	WK ZN PAV MRK REMOV (W) (DBL ARROW)	WK ZN PAV MRK REMOV (W) (ENTR GORE)	WK ZN PAV MRK REMOV (W) (EXIT GORE)	WK ZN PAV MRK REMOV (W) (UTURN ARROW)	WK ZN PAV MRK REMOV (W) (WORD)	WK ZN PAV MRK REMOV (Y) 4" (SLD)	PAV SURF PREP FOR MRK (4")	PAV SURF PREP FOR MRK (8")	PAV SURF PREP FOR MRK (12")	PAV SURF PREP FOR MRK (24")	PAV SURF PREP FOR MRK (ENTR GORE)	PAV SURF PREP FOR MRK (EXIT GORE)	PAV SURF PREP FOR MRK (RPM)
	EA	EA	EA	EA	EA	EA	LF	LF	LF	LF	LF	EA	EA	EA
CSJ: 0081-12-045														
PHASE 4 STEP 2														
SHEET 1 OF 24							1,449	3,348				0	0	45
SHEET 2 OF 24			1				2,038	4,676				1	0	60
SHEET 3 OF 24							742	1,657				0	0	19
SHEET 4 OF 24								0				0	0	0
CSJ: 0081-12-045 TOTAL			1	0			4229	9681				1	0	124
CSJ: 0014-16-255														
PHASE 4 STEP 2														
SHEET 5 OF 24								0				0	0	0
SHEET 6 OF 24								1,080				0	0	22
SHEET 7 OF 24								0				0	0	0
SHEET 8 OF 24							453	2,183				0	0	53
SHEET 9 OF 24				1			1,263	3,449				0	1	92
SHEET 10 OF 24							1,249	3,108				0	0	61
SHEET 11 OF 24							628	1,566				0	0	31
SHEET 12 OF 24			1				1,180	1,916				1	0	5
SHEET 13 OF 24							1,555	2,932				0	0	0
SHEET 14 OF 24				1			1,261	2,461				0	1	0
SHEET 15 OF 24								611				0	0	5
SHEET 16 OF 24								0				0	0	0
SHEET 17 OF 24								0				0	0	0
SHEET 18 OF 24							981	2,046				0	0	29
SHEET 19 OF 24			1	1			1,536	5,030				1	1	66
SHEET 20 OF 24							1,335	3,865				0	0	6
SHEET 21 OF 24							447	894				0	0	0
SHEET 22 OF 24								0				0	0	0
SHEET 23 OF 24								0				0	0	0
SHEET 24 OF 24								0				0	0	0
CSJ: 0014-16-255 TOTAL			2	3			11888	31141				2	3	370
PHASE TOTAL			3	3			16,117	40,822				3	3	494

I. S. ENGINEERS, LLC

TBPE REG. # F-11657

Texas Department of Transportation

© 2012

IH 35W FROM NORTH TARRANT PKWY TO IH 820

QUANTITY SUMMARY
TRAFFIC CONTROL

SHEET 30 OF 33

DESIGN	FED.RD. DIV.NO.	FEDERAL AID PROJECT NO.		HIGHWAY NO.
SY	6	(SEE TITLE SHEET)		IH 35W
GRAPHICS ZS	STATE	DISTRICT	COUNTY	SHEET NO.
CHECK BV	TEXAS	FTW	TARRANT	88
CHECK MNM	CONTROL	SECTION	JOB	
	0014	16	255, ETC.	

DRAWING DATE: 8/20/2012 FILENAME: S3BTCPSUM30.dgn

SUMMARY OF TRAFFIC CONTROL ITEMS

TCP PHASE 5		403 2001	464 2003	464 2005		465 2077	476 2001	479 2006	479 2007	508 2002	512 2008	512 2009	512 2026	512 2027	512 2035	512 2036
		TEMPORARY SPL SHORING	RC PIPE (CL III) (18 IN)	RC PIPE (CL III) (24 IN)		INLET (COMP) (DROP) (TY 1)	JACK BOR OR TUN PIPE (18 IN) (RC) (CL III)	ADJ INLET (CAP)	ADJ MANH (CAP)	CONSTRUCTION DETOURS	PORT CTB (FUR & INST) (LOW PROFILE) (TY 1)	PORT CTB (FUR & INST) (LOW PROFILE) (TY 2)	PORT CTB (MOVE) (LOW PROFILE) (TY 1)	PORT CTB (MOVE) (LOW PROFILE) (TY 2)	PORT CTB (STKPL) (LOW PROFILE) (TY 1)	PORT CTB (STKPL) (LOW PROFILE) (TY 2)
		SF	LF	LF		EA	EA	EA	EA	SY	LF	LF	LF	LF	LF	LF
CSJ: 0081-12-045																
PHASE 5																
SHEET 1 OF 24																
SHEET 2 OF 24																
SHEET 3 OF 24		4,915														
SHEET 4 OF 24																
CSJ: 0081-12-045 TOTAL		4915								0					0	
CSJ: 0014-16-255																
PHASE 5																
SHEET 5 OF 24																
SHEET 6 OF 24																
SHEET 7 OF 24																
SHEET 8 OF 24																
SHEET 9 OF 24																
SHEET 10 OF 24		4,333														
SHEET 11 OF 24		6,590														
SHEET 12 OF 24																
SHEET 13 OF 24																
SHEET 14 OF 24		7,553														
SHEET 15 OF 24		6,724														
SHEET 16 OF 24																
SHEET 17 OF 24																
SHEET 18 OF 24																
SHEET 19 OF 24															240	
SHEET 20 OF 24										568					40	
SHEET 21 OF 24																
SHEET 22 OF 24																
SHEET 23 OF 24																
SHEET 24 OF 24																
PHASE 5B																
SHEET 1 OF 3																
SHEET 2 OF 3																
SHEET 3 OF 3																
CSJ: 0014-16-255 TOTAL		25200								568					280	
PHASE TOTAL		30,115								568					280	

I. S. ENGINEERS, LLC

TBPE REG. # F-11657

Texas Department of Transportation

© 2012

IH 35W FROM NORTH TARRANT PKWY TO IH 820

QUANTITY SUMMARY
TRAFFIC CONTROL

SHEET 31 OF 33

DESIGN	FED.RD. DIV.NO.	FEDERAL AID PROJECT NO.		HIGHWAY NO.
SY	6	(SEE TITLE SHEET)		IH 35W
GRAPHICS	STATE	DISTRICT	COUNTY	SHEET NO.
ZS	TEXAS	FTW	TARRANT	89
CHECK	CONTROL	SECTION	JOB	
BV	0014	16	255, ETC.	
CHECK				
MNM				

DRAWING DATE: 8/20/2012 FILENAME: S3BTCPSUM31.dgn

SUMMARY OF TRAFFIC CONTROL ITEMS

TCP PHASE 5	512 2004 PORT CTB (FUR & INST) (SNGL SLP) (TY 1)	512 2022 PORT CTB (MOVE) (SNGL SLP) (TY 1)	512 2031 PORT CTB (STKPL) (SNGL SLP) (TY 1)	545 2022 CRASH CUSH ATTEN (INSTL) (REACT) (N)	545 2023 CRASH CUSH ATTEN (MOVE&RESET) (REACT) (N)	545 2024 CRASH CUSH ATTEN (REMOVE) (REACT) (N)	545 2025 CRASH CUSH ATTEN (INSTL) (REACT) (W)	545 2026 CRASH CUSH ATTEN (MOVE&RESET) (REACT) (W)	545 2027 CRASH CUSH ATTEN (REMOVE) (REACT) (W)	662 2056 WK ZN PAV MRK REMOV (REFL) (TY II-C-R)	662 2064 WK ZN PAV MRK REMOV (W) 4" (BRK)	662 2067 WK ZN PAV MRK REMOV (W) 4" (SLD)	662 2075 WK ZN PAV MRK REMOV (W) 8" (SLD)	662 2077 WK ZN PAV MRK REMOV (W) 12" (SLD)	662 2079 WK ZN PAV MRK REMOV (W) 24" (SLD)
	LF	LF	LF	EA	EA	EA	EA	EA	EA	EA	LF	LF	LF	LF	LF
CSJ: 0081-12-045															
PHASE 5															
SHEET 1 OF 24										13	130	500			
SHEET 2 OF 24		1,020	1,530			1				30	300	564			
SHEET 3 OF 24		1,110	2,430			1				30	300				
SHEET 4 OF 24			2,100		1	1			1	30	300	371			
CSJ: 0081-12-045 TOTAL		2130	6060		1	3			1	103	1030	1435			
CSJ: 0014-16-255															
PHASE 5															
SHEET 5 OF 24			1,560			2				30	300	1,200			
SHEET 6 OF 24															
SHEET 7 OF 24		480	480							30	300	1,200			
SHEET 8 OF 24															
SHEET 9 OF 24		1,200	1,200							30	300	1,085			
SHEET 10 OF 24		2,160	2,160						1	56	560	1,054			
SHEET 11 OF 24		2,400	2,400							60	600	1,200			
SHEET 12 OF 24		2,400	2,400							60	600	1,200			
SHEET 13 OF 24		1,110	2,070							34	340	1,796			
SHEET 14 OF 24		360	2,820						1	39	390	2,352			
SHEET 15 OF 24		540	1,320							71	710	1,278			
SHEET 16 OF 24										90	900	1,200			
SHEET 17 OF 24										90	900	900			
SHEET 18 OF 24		1,740								90	900	1,200			
SHEET 19 OF 24		3,150			1					52	520	1,578			
SHEET 20 OF 24		2,520			2					31	310	2,188			
SHEET 21 OF 24		600	600		1	1				19	190	742			
SHEET 22 OF 24															
SHEET 23 OF 24			450			1									
SHEET 24 OF 24			570			1									
PHASE 5B															
SHEET 1 OF 3			1950			1									
SHEET 2 OF 3		1,080	3,300			1				27	270				
SHEET 3 OF 3		1,080	2,370		1	2				6	60	406			
CSJ: 0014-16-255 TOTAL		20820	25650		5	9			2	815	8150	20579			
PHASE TOTAL		22,950	31,710		6	12			3	918	9,180	22,014			

I. S. ENGINEERS, LLC

TBPE REG. # F-11657

Texas Department of Transportation

© 2012

IH 35W FROM NORTH TARRANT PKWY TO IH 820

QUANTITY SUMMARY
TRAFFIC CONTROL

SHEET 32 OF 33

DESIGN	FED.RD. DIV.NO.	FEDERAL AID PROJECT NO.		HIGHWAY NO.
SY	6	(SEE TITLE SHEET)		IH 35W
GRAPHICS	STATE	DISTRICT	COUNTY	SHEET NO.
ZS	TEXAS	FTW	TARRANT	90
CHECK	CONTROL	SECTION	JOB	
BV	0014	16	255, ETC.	
CHECK				
MNM				

DRAWING DATE: 8/20/2012 FILENAME: S3BTCPSUM32.dgn

SUMMARY OF TRAFFIC CONTROL ITEMS

TCP PHASE 5	662 2084	662 2085	662 2086	662 2087	662 2093	662 2094	662 2099	678 2001	678 2003	678 2004	678 2006	678 2009	678 2010	678 2013
	WK ZN PAV MRK REMOV (W) (ARROW)	WK ZN PAV MRK REMOV (W) (DBL ARROW)	WK ZN PAV MRK REMOV (W) (ENTR GORE)	WK ZN PAV MRK REMOV (W) (EXIT GORE)	WK ZN PAV MRK REMOV (W) (UTURN ARROW)	WK ZN PAV MRK REMOV (W) (WORD)	WK ZN PAV MRK REMOV (Y) 4" (SLD)	PAV SURF PREP FOR MRK (4")	PAV SURF PREP FOR MRK (8")	PAV SURF PREP FOR MRK (12")	PAV SURF PREP FOR MRK (24")	PAV SURF PREP FOR MRK (ENTR GORE)	PAV SURF PREP FOR MRK (EXIT GORE)	PAV SURF PREP FOR MRK (RPM)
	EA	EA	EA	EA	EA	EA	LF	LF	LF	LF	LF	EA	EA	EA
CSJ: 0081-12-045														
PHASE 5														
SHEET 1 OF 24							500	1,130				0	0	13
SHEET 2 OF 24							1,200	2,064				0	0	30
SHEET 3 OF 24							1,200	1,500				0	0	30
SHEET 4 OF 24			1				1,200	1,871				1	0	30
CSJ: 0081-12-045 TOTAL			1	0			4100	6565				1	0	103
CSJ: 0014-16-255														
PHASE 5														
SHEET 5 OF 24							1,200	2,700				0	0	30
SHEET 6 OF 24								0				0	0	0
SHEET 7 OF 24							1,200	2,700				0	0	30
SHEET 8 OF 24								0				0	0	0
SHEET 9 OF 24							1,200	2,585				0	0	30
SHEET 10 OF 24				1			1,200	2,814				0	1	56
SHEET 11 OF 24							1,200	3,000				0	0	60
SHEET 12 OF 24							1,440	3,240				0	0	60
SHEET 13 OF 24			2				1,796	3,932				2	0	34
SHEET 14 OF 24							2,352	5,094				0	0	39
SHEET 15 OF 24				1			1,279	3,267				0	1	71
SHEET 16 OF 24							1,200	3,300				0	0	90
SHEET 17 OF 24				1			1,200	3,000				0	1	90
SHEET 18 OF 24							1,200	3,300				0	0	90
SHEET 19 OF 24			2	1			1,754	3,852				2	1	52
SHEET 20 OF 24							2,202	4,700				0	0	31
SHEET 21 OF 24							742	1,674				0	0	19
SHEET 22 OF 24								0				0	0	0
SHEET 23 OF 24								0				0	0	0
SHEET 24 OF 24								0				0	0	0
PHASE 5B														
SHEET 1 OF 3								0				0	0	0
SHEET 2 OF 3							1,064	1,334				0	0	27
SHEET 3 OF 3			1				854	1,320				1	0	6
CSJ: 0014-16-255 TOTAL			5	4			23083	51812				5	4	815
PHASE TOTAL			6	4			27,183	58,377				6	4	918

I. S. ENGINEERS, LLC

TBPE REG. # F-11657

Texas Department of Transportation

© 2012

IH 35W FROM NORTH TARRANT PKWY TO IH 820

QUANTITY SUMMARY
TRAFFIC CONTROL

SHEET 33 OF 33

DESIGN	FED.RD. DIV.NO.	FEDERAL AID PROJECT NO.		HIGHWAY NO.
SY	6	(SEE TITLE SHEET)		IH 35W
GRAPHICS	STATE	DISTRICT	COUNTY	SHEET NO.
ZS	TEXAS	FTW	TARRANT	91
CHECK	CONTROL	SECTION	JOB	
BV	0014	16	255, ETC.	
CHECK				
MNM				

FILENAME: S3BTCPSUM33.dgn

DRAWING DATE: 8/20/2012

REMOVAL SUMMARY

	0100 2002	* 0104	* 0104	* 0104	* 0104	* 0104	* 0104	* 0104	* 0104	* 0104	* 0104	305 2008	305 2022	0305 2055	0496 2005	0496 2006	0496 2008	0496 2010	0496 2040
	PREPARING ROW	REMOVING CONC (PAV)	REMOVING CONC (RIPRAP)	REMOVING CONC (SIDEWALK)	REMOVING CONC (DRIVEWAYS)	REMOVING CONC (CTB)	REMOVING CONC (RAIL)	REMOV STR (INLET)	REMOV STR (MANHOLE)	REMOV STR (SET)	REMOV STR (PIPE)	SALV, HAUL & STKPL RCL APH PV (0"-4")	SALV, HAUL & STKPL RCL APH PV (4")	SALV, HAUL & STKPL RCL APH PV (4"-14")	REMOV STR (WINGWALL)	REMOV STR (HEADWALL)	REMOV STR (BOX CULVERT)	REMOV STR (BRIDGE 100-499 FT LENGTH)	REMOV STR (RET WALL)
	STA	SY	SY	SY	SY	LF	LF	EA	EA	EA	LF	SY	SY	SY	EA	EA	LF	EA	LF
CSJ: 0081-12-045																			
1	5	8				1002**						3436	709						
2	12	2608				1338**		1		3	248	7674	6192	3823					
3	12	6090	553			1200**		1				6459	8394	5383	2		324		
4	12	6930				1200**						6930	11567	1222					
5	4	956										956	1638						
6		929				350**						929	1635						
23	1	845										845	1453						
CSJ: 0081-12-045 TOTAL	**46**	**18366**	**553**	**0**	**0**	**5090**	**0**	**2**	**0**	**3**	**248**	**27229**	**31588**	**10428**	**2**	**0**	**324**	**0**	**0**
CSJ: 0014-16-255																			
5	8	4348	998					1			86	4348	7363			1		1	
6		4936	874			850**		2			240	7758	8135						
7	12	6431						1				7211	10761		1		762		
8		5346				1200**						9288	5971	1520	3		1373		
9	12	10019				1200**						17183	12933	4097	4		780		
10	12	10632				1200**						14990	11148	11126					
11	12	8975	165		265	1252**		4			55	6688	8975	13658					
12	12	17399	3729		413	1200**		5			1745	2099	17399	4688		1			
13	12	23066	1311			1200		5			985		23066						
14	12	23835	1009		178	800	360	5			1259		23835					4	1719
15	12	36239	1691	1056	1408	790	281	25	1		2691		36239				319		1476
16	12	27212	90	107	3614	1200		13	3		1988	2355	27212	5063		1			185
17	12	16759			2282	1200		7			1304	5523	16759	8338					
18	12	10197			280	150						9818	10197	14247					
19	12	7604						2			19	6445	7604	11297					
20	11	33										33	33	1409	1		6		
21	3	130										130	307						
22	11	1955										1955	3232						
23	11	3663										7720	5857						
CSJ: 0014-16-255 TOTAL	**188**	**218779**	**9867**	**1163**	**8440**	**12242**	**641**	**70**	**4**	**0**	**10372**	**103544**	**237026**	**75443**	**9**	**3**	**3240**	**5**	**3380**
PROJECT TOTAL	**234**	**237145**	**10420**	**1163**	**8440**	**17332**	**641**	**72**	**4**	**3**	**10620**	**130773**	**268614**	**85871**	**11**	**3**	**3564**	**5**	**3380**

	* 0542	* 0542	* 0550	0610 2067	0610 2069	0610 2097	0628 2158	0644 2060	0647 2003	0650 2173	0690 2063	6008 2002
	REMOVING METAL BEAM GUARD FENCE	REMOVING TERMINAL ANCHOR SECTION	CHAIN LINK FENCE (REMOVE)	REMOVE RD IL ASM (SHOE - BASE)	REMOVE RD IL ASM (U/P)	REMOVE RD IL ASM (FOUNDATION ONLY)	REMOVE ELECTRICAL SERVICES	REMOV SM RD SN SUP & AM	REMOVE LRSA	REMOVE OVERHD SIGN SUP	REMOVAL OF CONCRETE FOUNDATIONS	REMOVE OVERHEAD SIGN PANELS
	LF	EA	LF	EA	EA	EA	EA	EA	EA	EA	EA	EA
CSJ: 0081-12-045												
1								1				
2	200	1										1
3	50	1						5	2			
4	125							2	2			
5	51	1										
6	150	1										
23												
CSJ: 0081-12-045 TOTAL	**576**	**4**	**0**	**0**	**0**	**0**	**0**	**8**	**4**	**0**	**0**	**1**
CSJ: 0014-16-255												
5	2024	2	2395					1	1			
6	225		2396					2				
7	1225	1							2			
8	675	3							1			
9	525	2						1	1	1		
10	950	1						10			1	
11	300	1						30	2			
12	400	1						9	1	1		
13	800	4						3		1	1	
14	2750							19			1	
15	600	1		4	16		1	29	1	2		
16	225	1		5		1		9				
17	475	3						3	2	2		
18	100							1	1	1		
19				1								
20	650	1										
21												
22									1			
23	1275	2						3	1			
CSJ: 0014-16-255 TOTAL	**13199**	**23**	**4791**	**10**	**16**	**1**	**1**	**120**	**14**	**8**	**3**	**0**
PROJECT TOTAL	**13775**	**27**	**4791**	**10**	**16**	**1**	**1**	**128**	**18**	**8**	**3**	**1**

NOTES:

1) SEE QUANTITY SUMMARY - BRIDGE SHEETS FOR ADDTIONAL REMOVAL QUANTITIES FOR BRIDGE WIDENINGS (NB IH 35W OVER BIG FOSSIL CREEK, SB IH 35W OVER BIG FOSSIL CREEK AND IH 35W OVER WESTERN CENTER BLVD).

* FOR CONTRACTORS INFORMATION ONLY, ITEMS SUBSIDIARY TO ITEM 100 PREP ROW.

** QUANTITY INCLUDES PORTABLE CTB. EXISTING PORTABLE CTB'S NORTH OF STA 1506+00 MAY BE USED FOR TRAFFIC CONTROL ON THIS PROJECT AS LONG AS THEY ARE NOT DAMAGED. THE CONTRACTOR SHALL DELIVER EXISTING PORTABLE CTB'S TO A LOCATION WITHIN THE FORT WORTH DISTRICT OF TXDOT AS DIRECTED BY THE ENGINEER.

CP&Y, INC.
TBPE REGISTRATION NO. F-1741

Texas Department of Transportation
© 2012

IH 35W FROM NORTH TARRANT PKWY TO IH 820

QUANTITY SUMMARY

REMOVAL

SHEET 1 OF 1

DESIGN	FED. RD. DIV. NO.	FEDERAL AID PROJECT NO.		HIGHWAY NO.
CPY	6	(SEE TITLE SHEET)		IH 35W
GRAPHICS CPY	STATE	DISTRICT	COUNTY	SHEET NO.
CHECK CPY	TEXAS	FTW	TARRANT	92
CHECK CPY	CONTROL 0014	SECTION 16	JOB 255, ETC.	

FILENAME: S3B*REMOVAL SUM01.dgn

DRAWING DATE: 7/13/2012

SUMMARY OF MANAGED LANE AND GENERAL PURPOSE PAVING ITEMS

SHEET	LOCATION	247 2056 FL BS (CMP IN PLC)(TY D GR 4)(FNAL POS)	247 2060 FL BS (CMP IN PLC)(TY E GR 4)(FNAL POS)	275 2001 CEMENT	275 2018 CEMENT TREAT (NEW BASE)(36")	260 2006 LIME TRT (EXST MATL)(6")	**260 2009 LIME TRT (EXST MATL)(10")	260 2016 LIME (HYD, COM, OR QK(SLURRY))
		CY	CY	TON	SY	SY	SY	TON
CSJ: 0081-12-045								
SHEET 1 OF 15	IH 35W - ML	301						110
SHEET 2 OF 15	IH 35W - ML	1,370					6,682	766 *
SHEET 3 OF 15	IH 35W - ML	536					5,458	1,023 *
SHEET 1 OF 22	IH 35W - GP	500						130
SHEET 2 OF 22	IH 35W - GP	1,612						468
SHEET 3 OF 22	IH 35W - GP	2,775						973
SHEET 4 OF 22	IH 35W - GP	420						149
SHEET 5 OF 22	IH 35W - GP	340						121
SHEET 1 OF 4	GP TRANS	386					266	114
SHEET 2 OF 4	GP TRANS	1,856					2,185	549
SHEET 3 OF 4	GP TRANS	1,683						482
SHEET 4 OF 4	GP TRANS	175						61
SHEET 1 OF 3	ML TRANS	202					673	79
SHEET 2 OF 3	ML TRANS	1,259					4,471	491
SHEET 3 OF 3	ML TRANS	490					5,166	329
	CSJ: 0081-12-045 TOTAL	**13,905**	**0**	**0**	**0**	**0**	**24,901**	**5,845**
CSJ: 0014-16-255								
SHEET 3 OF 15	IH 35W - ML	1,275					12,197	974 *
SHEET 4 OF 15	IH 35W - ML	2,598					11,696	1,230
SHEET 5 OF 15	IH 35W - ML	2,592					12,028	1,377
SHEET 6 OF 15	IH 35W - ML	2,492					11,761	1,234
SHEET 7 OF 15	IH 35W - ML	2,602					10,591	964
SHEET 8 OF 15	IH 35W - ML	2,490					12,640	1,619
SHEET 9 OF 15	IH 35W - ML	2,484					9,263	1,383
SHEET 10 OF 15	IH 35W - ML	1,696	126	8	168		4,439	567
SHEET 11 OF 15	IH 35W - ML	1,624					5,735	697
SHEET 12 OF 15	IH 35W - ML	2,370					8,323	1,358
SHEET 13 OF 15	IH 35W - ML	2,370					7,412	827
SHEET 14 OF 15	IH 35W - ML	2,435					10,033	1,442
SHEET 15 OF 15	IH 35W - ML	1,119					2,700	649
SHEET 4 OF 22	IH 35W - GP	997						347
SHEET 5 OF 22	IH 35W - GP	906						322
SHEET 6 OF 22	IH 35W - GP	1,996						678
SHEET 7 OF 22	IH 35W - GP	1,209						430
SHEET 8 OF 22	IH 35W - GP	3,493						1,424
SHEET 9 OF 22	IH 35W - GP	3,391						1,255
SHEET 10 OF 22	IH 35W - GP	1,767						429
SHEET 11 OF 22	IH 35W - GP	1,562						419
SHEET 12 OF 22	IH 35W - GP	3,227						1,636
SHEET 13 OF 22	IH 35W - GP	1,740						824
SHEET 14 OF 22	IH 35W - GP	1,466						671
SHEET 15 OF 22	IH 35W - GP	878	199	12	283			242
SHEET 16 OF 22	IH 35W - GP	1,077	609	38	802			298
SHEET 17 OF 22	IH 35W - GP	1,016	242	15	129			334
SHEET 18 OF 22	IH 35W - GP	1,378	716	45	440			469
SHEET 19 OF 22	IH 35W - GP	3,785						1,767
SHEET 20 OF 22	IH 35W - GP	4,147						1,065
SHEET 21 OF 22	IH 35W - GP	3,933						1,855
SHEET 22 OF 22	IH 35W - GP	1,572						807
SHEET 1 OF 2	GP TRANS	1,327					4,738	826
SHEET 2 OF 2	GP TRANS	321					37	176
SHEET 1 OF 2	US287					2,936		53
SHEET 2 OF 2	US287					4,624		83
	CSJ: 0014-16-255 TOTAL	**69,335**	**1,892**	**118**	**1,822**	**7,560**	**123,593**	**30,731**
	PROJECT TOTAL	**83,240**	**1,892**	**118**	**1,822**	**7,560**	**148,494**	**36,576**

* QUANTITY INCLUDES LIME REQUIRED AT EMBANKMENT SLOPE (WHERE APPLICABLE). TREATMENT OF THE LIME AT THE EMBANKMENT SLOPE SHALL BE CONSIDERED SUBSIDIARY TO EMBANKMENT ITEM.
**CONTAINS 10" LIME EXTENSION FOR WHOLE SECTION INCLUDING MANAGED LANE, GENERAL PURPOSE LANE, FRONTAGE ROAD, RAMPS, AND CONNECTORS WHERE APPLICABLE.

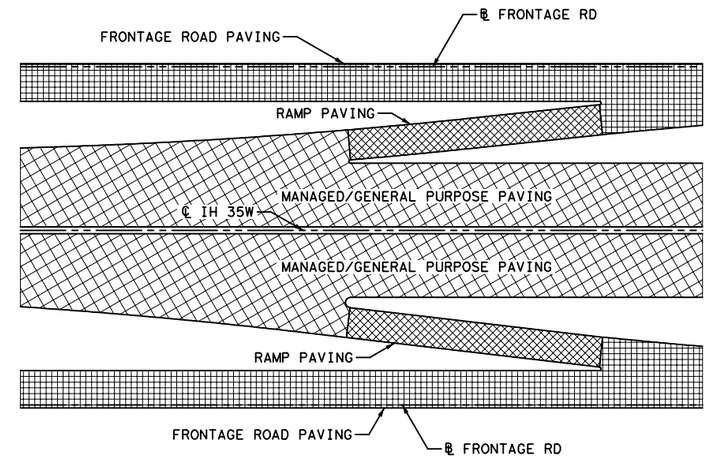

TYPICAL MAINLANE/RAMP/FRONTAGE ROAD PAVING LIMITS

KENNEDY CONSULTING
TBPE REGISTRATION NO. F-926

Texas Department of Transportation
© 2012

IH 35W FROM NORTH TARRANT PKWY TO IH 820

QUANTITY SUMMARY

MANAGED LN & GEN PURPOSE LN PAVEMENT

SHEET 1 OF 7

DESIGN KCI	FED. RD. DIV. NO.	FEDERAL AID PROJECT NO.		HIGHWAY NO.
GRAPHICS KCI	6	(SEE TITLE SHEET)		IH 35W
	STATE	DISTRICT	COUNTY	SHEET NO.
CHECK KCI	TEXAS	FTW	TARRANT	93
	CONTROL	SECTION	JOB	
CHECK KCI	0014	16	255, ETC.	

FILENAME: S3BSUM00.dgn

DRAWING DATE: 9/10/2012

SUMMARY OF MANAGED LANE AND GENERAL PURPOSE PAVING ITEMS

SHEET	LOCATION	260 2022 LIME TRT (EXIST MATL) (18")	260 2023 LIME TRT (EXIST MATL) (36")	260 2026 LIME TRT (EXIST MATL) (24")	260 2028 LIME TRT (EXST MATL) (8")	310 2026 PRIME COAT (EC-30)	346 2030 STONE-MTRX-ASPH SMA-F SAC-B PG76-22	360 2001 CONC PVMT (CONT REINF-CRCP) (8")
		SY	SY	SY	SY	GAL	TON	SY
CSJ: 0081-12-045								
SHEET 1 OF 15	IH 35W - ML	24		1,511		379	91	
SHEET 2 OF 15	IH 35W - ML			6,697		1,769	424	
SHEET 3 OF 15	IH 35W - ML			2,575		700	168	
SHEET 1 OF 22	IH 35W - GP	2,410				650	156	
SHEET 2 OF 22	IH 35W - GP	5,081		2,689		2,099	503	
SHEET 3 OF 22	IH 35W - GP			13,513		3,594	861	
SHEET 4 OF 22	IH 35W - GP			2,070		540	129	
SHEET 5 OF 22	IH 35W - GP			1,675		437	105	
SHEET 1 OF 4	GP TRANS	1,957				487	362	
SHEET 2 OF 4	GP TRANS	8,947				2,417	943	
SHEET 3 OF 4	GP TRANS	5,451		2,601		2,196	552	
SHEET 4 OF 4	GP TRANS			847		228	55	
SHEET 1 OF 3	ML TRANS	1,096				273	65	
SHEET 2 OF 3	ML TRANS	5,228		1,034		1,604	384	
SHEET 3 OF 3	ML TRANS			2,412		643	154	
	CSJ: 0081-12-045 TOTAL	**30,194**	**0**	**37,624**	**0**	**18,016**	**4,952**	**0**
CSJ: 0014-16-255								
SHEET 3 OF 15	IH 35W - ML			6,083		1,673	400	
SHEET 4 OF 15	IH 35W - ML			12,205		3,430	822	
SHEET 5 OF 15	IH 35W - ML	1,911	4,778	5,508		3,419	819	
SHEET 6 OF 15	IH 35W - ML	6,756	4,778			3,317	795	
SHEET 7 OF 15	IH 35W - ML	11,975				3,474	832	
SHEET 8 OF 15	IH 35W - ML		11,478			3,319	795	
SHEET 9 OF 15	IH 35W - ML	2,887	8,790			3,277	785	
SHEET 10 OF 15	IH 35W - ML	7,762			610	2,302	552	
SHEET 11 OF 15	IH 35W - ML	5,776	1,867		467	2,141	513	
SHEET 12 OF 15	IH 35W - ML	1,867	9,333			3,120	747	
SHEET 13 OF 15	IH 35W - ML	11,200	0			3,120	748	
SHEET 14 OF 15	IH 35W - ML	1,860	9,632			3,208	769	
SHEET 15 OF 15	IH 35W - ML		5,259			1,474	353	
SHEET 4 OF 22	IH 35W - GP			4,824		1,296	310	
SHEET 5 OF 22	IH 35W - GP			4,467		1,165	279	
SHEET 6 OF 22	IH 35W - GP			9,411		2,629	630	
SHEET 7 OF 22	IH 35W - GP			5,975		1,552	372	
SHEET 8 OF 22	IH 35W - GP	2,883	7,425	6,476		4,556	1,091	
SHEET 9 OF 22	IH 35W - GP	8,928	7,160			4,439	1,063	
SHEET 10 OF 22	IH 35W - GP	7,952				2,265	543	
SHEET 11 OF 22	IH 35W - GP	7,222	273			2,009	481	
SHEET 12 OF 22	IH 35W - GP	339	14,979			4,239	1,016	
SHEET 13 OF 22	IH 35W - GP	1,400	6,933			2,271	544	
SHEET 14 OF 22	IH 35W - GP	1,823	5,299			1,899	455	
SHEET 15 OF 22	IH 35W - GP	4,286			439	1,205	289	
SHEET 16 OF 22	IH 35W - GP	5,525				1,498	359	
SHEET 17 OF 22	IH 35W - GP	4,129	952		347	1,378	330	
SHEET 18 OF 22	IH 35W - GP	5,066	1,811			1,984	475	
SHEET 19 OF 22	IH 35W - GP	3,287	14,722			4,951	1,186	
SHEET 20 OF 22	IH 35W - GP	19,714				5,439	1,303	
SHEET 21 OF 22	IH 35W - GP	3,181	15,585			5,150	1,234	
SHEET 22 OF 22	IH 35W - GP		7,476			2,058	493	
SHEET 1 OF 2	GP TRANS		6,328			1,739	584	
SHEET 2 OF 2	GP TRANS		1,619			406	378	
SHEET 1 OF 2	US287							2,633
SHEET 2 OF 2	US287							4,288
	CSJ: 0014-16-255 TOTAL	**127,729**	**146,477**	**54,949**	**1,863**	**91,402**	**22,345**	**6,921**
	PROJECT TOTAL	**157,923**	**146,477**	**92,573**	**1,863**	**109,418**	**27,297**	**6,921**

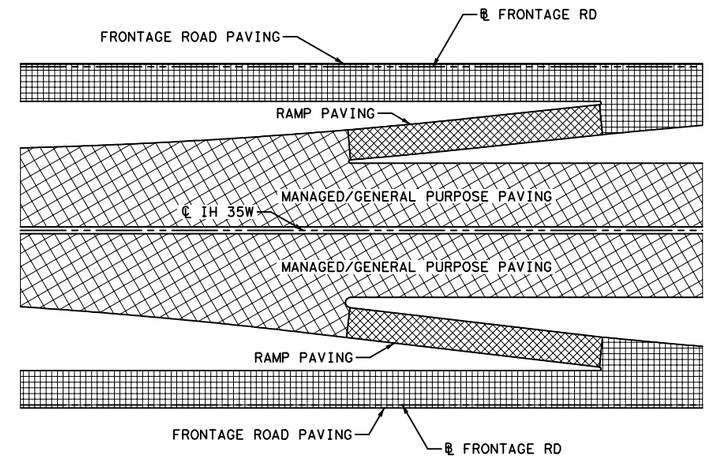

TYPICAL MAINLANE/RAMP/FRONTAGE ROAD PAVING LIMITS

KENNEDY CONSULTING
TBPE REGISTRATION NO. F-926

Texas Department of Transportation
© 2012

IH 35W FROM NORTH TARRANT PKWY TO IH 820

QUANTITY SUMMARY

MANAGED LN & GEN PURPOSE LN PAVEMENT (CONT'D)

SHEET 2 OF 7

DESIGN KCI	FED. RD. DIV. NO. 6	FEDERAL AID PROJECT NO. (SEE TITLE SHEET)		HIGHWAY NO. IH 35W
GRAPHICS KCI	STATE TEXAS	DISTRICT FTW	COUNTY TARRANT	SHEET NO. 94
CHECK KCI	CONTROL 0014	SECTION 16	JOB 255, ETC.	
CHECK KCI				

FILENAME: S3BSUM00.dgn

DRAWING DATE: 9/10/2012

SUMMARY OF MANAGED LANE AND GENERAL PURPOSE PAVING ITEMS

SHEET	LOCATION	360 2006 CONC PVMT (CONT REINF-CRCP) (13")	3224 2008 D-GR HMA (QCQA) TY-B PG64-22	3224 2040 D-GR HMA (QCQA) TY-D PG64-22	3224 2062 D-GR HMA (QCQA) TY-D PG64-22 (LEVEL-UP)
		SY	TON	TON	TON
CSJ: 0081-12-045					
SHEET 1 OF 15	IH 35W - ML		654		
SHEET 2 OF 15	IH 35W - ML		3,052		
SHEET 3 OF 15	IH 35W - ML		1,208		
SHEET 1 OF 22	IH 35W - GP		1,121		
SHEET 2 OF 22	IH 35W - GP		3,621		
SHEET 3 OF 22	IH 35W - GP		6,200		
SHEET 4 OF 22	IH 35W - GP		932		
SHEET 5 OF 22	IH 35W - GP		754		
SHEET 1 OF 4	GP TRANS		840		
SHEET 2 OF 4	GP TRANS		4,169		
SHEET 3 OF 4	GP TRANS		3,788		
SHEET 4 OF 4	GP TRANS		393		
SHEET 1 OF 3	ML TRANS		471		
SHEET 2 OF 3	ML TRANS		2,767		
SHEET 3 OF 3	ML TRANS		1,109		
	CSJ: 0081-12-045 TOTAL	**0**	**31,079**	**0**	**0**
CSJ: 0014-16-255					
SHEET 3 OF 15	IH 35W - ML		3,068		
SHEET 4 OF 15	IH 35W - ML		6,902		
SHEET 5 OF 15	IH 35W - ML		6,881		
SHEET 6 OF 15	IH 35W - ML		6,675		
SHEET 7 OF 15	IH 35W - ML		6,992		
SHEET 8 OF 15	IH 35W - ML		6,679		
SHEET 9 OF 15	IH 35W - ML		6,594		
SHEET 10 OF 15	IH 35W - ML	610	4,633	140	
SHEET 11 OF 15	IH 35W - ML	467	4,309	107	
SHEET 12 OF 15	IH 35W - ML		6,279		
SHEET 13 OF 15	IH 35W - ML		6,279		
SHEET 14 OF 15	IH 35W - ML		6,456		
SHEET 15 OF 15	IH 35W - ML		2,967		
SHEET 4 OF 22	IH 35W - GP		2,401		
SHEET 5 OF 22	IH 35W - GP		2,139		
SHEET 6 OF 22	IH 35W - GP		5,291		
SHEET 7 OF 22	IH 35W - GP		3,124		
SHEET 8 OF 22	IH 35W - GP		9,168		
SHEET 9 OF 22	IH 35W - GP		8,933		
SHEET 10 OF 22	IH 35W - GP		4,558		
SHEET 11 OF 22	IH 35W - GP		4,043		
SHEET 12 OF 22	IH 35W - GP		8,531		
SHEET 13 OF 22	IH 35W - GP		4,570		
SHEET 14 OF 22	IH 35W - GP		3,821		
SHEET 15 OF 22	IH 35W - GP	393	2,426	97	
SHEET 16 OF 22	IH 35W - GP		3,015		
SHEET 17 OF 22	IH 35W - GP	311	2,774	80	
SHEET 18 OF 22	IH 35W - GP		3,994		
SHEET 19 OF 22	IH 35W - GP		9,964		
SHEET 20 OF 22	IH 35W - GP		10,946		
SHEET 21 OF 22	IH 35W - GP		10,364		
SHEET 22 OF 22	IH 35W - GP		4,142		
SHEET 1 OF 2	GP TRANS		3,500		268
SHEET 2 OF 2	GP TRANS		818		448
SHEET 1 OF 2	US287			687	
SHEET 2 OF 2	US287			1,156	
	CSJ: 0014-16-255 TOTAL	**1,781**	**183,236**	**2,267**	**716**
	PROJECT TOTAL	**1,781**	**214,315**	**2,267**	**716**

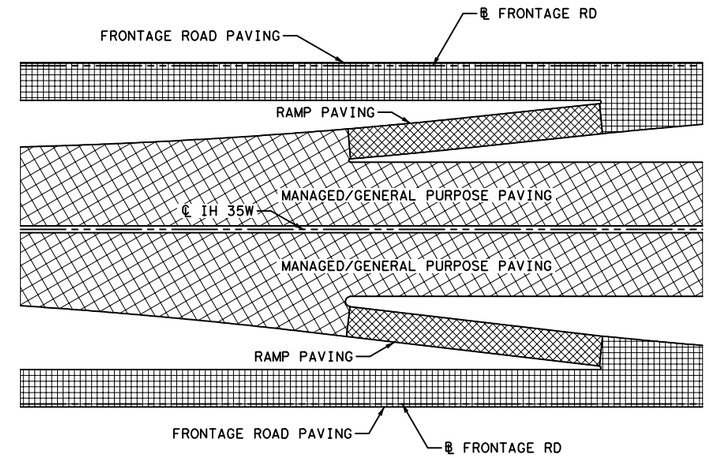

TYPICAL MAINLANE/RAMP/FRONTAGE ROAD PAVING LIMITS

KENNEDY CONSULTING
TBPE REGISTRATION NO. F-926

Texas Department of Transportation
© 2012

IH 35W FROM NORTH TARRANT PKWY TO IH 820

QUANTITY SUMMARY

MANAGED LN & GEN PURPOSE LN
PAVEMENT (CONT'D)

SHEET 3 OF 7

DESIGN	FED. RD. DIV. NO.	FEDERAL AID PROJECT NO.		HIGHWAY NO.
KCI	6	(SEE TITLE SHEET)		IH 35W
GRAPHICS KCI	STATE	DISTRICT	COUNTY	SHEET NO.
CHECK KCI	TEXAS	FTW	TARRANT	95
CHECK KCI	CONTROL	SECTION	JOB	
	0014	16	255, ETC.	

FILENAME: S3BSUM00.dgn
DRAWING DATE: 9/10/2012

SUMMARY OF DIRECT CONNECTOR AND RAMP PAVING ITEMS

SHEET	LOCATION	247 2056 FL BS (CMP IN PLC)(TY D GR 4)(FNAL POS)	247 2060 FL BS (CMP IN PLC)(TY E GR 4)(FNAL POS)	275 2001 CEMENT	275 2018 CEMENT TREAT (NEW BASE)(36")	260 2016 LIME (HYD, COM, OR QK(SLURRY))	260 2022 LIME TRT (EXIST MATL)(18")
		CY	CY	TON	SY	TON	SY
CSJ: 0081-12-045							
SHEET 1 OF 2	DC 35S-287W	468				173	
SHEET 2 OF 2	DC 35S-287W	457				169	
SHEET 1 OF 1	RMP 35N-NTP	730				203	3,752
SHEET 1 OF 1	RMP NTP-35S	394				109	2,026
SHEET 1 OF 2	RMP BB-35N	379				105	1,951
SHEET 2 OF 2	RMP BB-35N	405				113	2,085
	CSJ: 0081-12-045 TOTAL	**2,833**	**0**	**0**	**0**	**872**	**9,814**
CSJ: 0014-16-255							
SHEET 1 OF 5	DC 35N-287W	537				142	2,634
SHEET 2 OF 5	DC 35N-287W	729	78	5	146	204	3,770
SHEET 3 OF 5	DC 35N-287W	1,323	159	10	94	351	6,508
SHEET 4 OF 5	DC 35N-287W	1,492				391	7,247
SHEET 5 OF 5	DC 35N-287W	774				208	3,849
SHEET 1 OF 2	DC MLN-287W		123	8	113		
SHEET 2 OF 2	DC MLN-287W	492	112	7	66	145	1,531
SHEET 1 OF 1	DC 287E-35S	640				172	3,185
SHEET 1 OF 3	DC 287E-MLS	396	121	8	109	115	2,131
SHEET 2 OF 3	DC 287E-MLS	665				165	3,051
SHEET 3 OF 3	DC 287E-MLS	270				75	1,382
SHEET 1 OF 1	DC 35S-820W	132				73	
SHEET 1 OF 2	RMP 35N-BB	152	114	7	71	41	754
SHEET 2 OF 2	RMP 35N-BB	398	259	16	161	117	1,314
SHEET 1 OF 1	RMP 35N-WCB	721				195	3,612
SHEET 1 OF 1	RMP 35S-BB	614				165	3,052
SHEET 1 OF 1	RMP 35S-WCB	266				74	1,374
SHEET 1 OF 1	RMP BB-287W	493				137	2,535
SHEET 1 OF 2	RMP BB-35S	109	114	7	72	30	564
SHEET 2 OF 2	RMP BB-35S	394	256	16	160	111	2,056
SHEET 1 OF 3	RMP BB-MLS	623				340	
SHEET 2 OF 3	RMP BB-MLS	479	134	8	77	147	1,943
SHEET 3 OF 3	RMP BB-MLS	361	112	7	66	92	1,704
SHEET 1 OF 3	RMP MLN-BB	153				40	737
SHEET 2 OF 3	RMP MLN-BB	82	112	7	78	24	446
SHEET 3 OF 3	RMP MLN-BB	303	112	7	66	83	1,234
SHEET 1 OF 1	RMP WCB-35N	459				129	2,386
SHEET 1 OF 1	RMP WCB-35S	464				258	
	CSJ: 0014-16-255 TOTAL	**13,521**	**1,806**	**113**	**1,279**	**4,024**	**58,999**
	PROJECT TOTAL	**16,354**	**1,806**	**113**	**1,279**	**4,896**	**68,813**

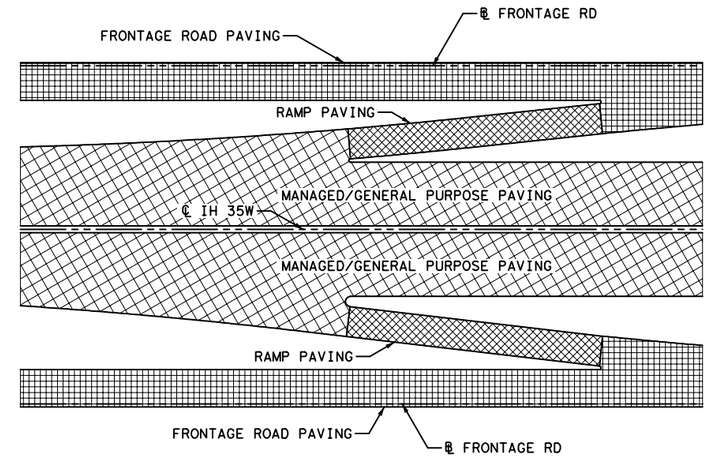

TYPICAL MAINLANE/RAMP/FRONTAGE ROAD PAVING LIMITS

KENNEDY CONSULTING
TBPE REGISTRATION NO. F-926

Texas Department of Transportation
© 2012

IH 35W FROM NORTH TARRANT PKWY TO IH 820

QUANTITY SUMMARY

DIRECT CONNECTOR & RAMP PAVEMENT

SHEET 4 OF 7

DESIGN KCI	FED.RD. DIV.NO.	FEDERAL AID PROJECT NO.		HIGHWAY NO.
GRAPHICS KCI	6	(SEE TITLE SHEET)		IH 35W
	STATE	DISTRICT	COUNTY	SHEET NO.
CHECK KCI	TEXAS	FTW	TARRANT	96
	CONTROL	SECTION	JOB	
CHECK KCI	0014	16	255, ETC.	

FILENAME: S3BSUM00.dgn

DRAWING DATE: 9/10/2012

SUMMARY OF DIRECT CONNECTOR AND RAMP PAVING ITEMS

SHEET	LOCATION	260 2023 LIME TRT (EXIST MATL) (36")	260 2026 LIME TRT (EXIST MATL) (24")	310 2026 PRIME COAT (EC-30)	3224 2008 D-GR HMA(QCQA) TY-B PG64-22	346 2030 STONE-MTRX-ASPH SMA-F SAC-B PG76-22
		SY	SY	GAL	TON	TON
CSJ: 0081-12-045						
SHEET 1 OF 2	DC 35S-287W		2,407	587	900	141
SHEET 2 OF 2	DC 35S-287W		2,348	572	877	137
SHEET 1 OF 1	RMP 35N-NTP			916	878	219
SHEET 1 OF 1	RMP NTP-35S			494	473	118
SHEET 1 OF 2	RMP BB-35N			476	456	114
SHEET 2 OF 2	RMP BB-35N			508	487	122
	CSJ: 0081-12-045 TOTAL	**0**	**4,755**	**3,553**	**4,071**	**851**
CSJ: 0014-16-255						
SHEET 1 OF 5	DC 35N-287W			692	1,060	166
SHEET 2 OF 5	DC 35N-287W			1,003	1,539	240
SHEET 3 OF 5	DC 35N-287W			1,752	2,687	420
SHEET 4 OF 5	DC 35N-287W			1,934	2,966	463
SHEET 5 OF 5	DC 35N-287W			990	1,518	237
SHEET 1 OF 2	DC MLN-287W					
SHEET 2 OF 2	DC MLN-287W		867	673	773	161
SHEET 1 OF 1	DC 287E-35S			819	942	196
SHEET 1 OF 3	DC 287E-MLS			873	1,004	209
SHEET 2 OF 3	DC 287E-MLS			338	389	81
SHEET 3 OF 3	DC 287E-MLS			819	942	196
SHEET 1 OF 1	DC 35S-820W	677		165	332	40
SHEET 1 OF 2	RMP 35N-BB			226	217	54
SHEET 2 OF 2	RMP 35N-BB		642	578	554	138
SHEET 1 OF 1	RMP 35N-WCB			915	877	219
SHEET 1 OF 1	RMP 35S-BB			785	752	188
SHEET 1 OF 1	RMP 35S-WCB			332	319	80
SHEET 1 OF 1	RMP BB-287W			618	592	148
SHEET 1 OF 2	RMP BB-35S			169	162	41
SHEET 2 OF 2	RMP BB-35S			358	344	86
SHEET 1 OF 3	RMP BB-MLS	3,146		790	757	189
SHEET 2 OF 3	RMP BB-MLS	387		665	637	159
SHEET 3 OF 3	RMP BB-MLS			511	490	123
SHEET 1 OF 3	RMP MLN-BB			199	191	48
SHEET 2 OF 3	RMP MLN-BB			134	128	32
SHEET 3 OF 3	RMP MLN-BB		224	431	413	103
SHEET 1 OF 1	RMP WCB-35N			570	546	137
SHEET 1 OF 1	RMP WCB-35S	2,385		581	557	139
	CSJ: 0014-16-255 TOTAL	**6,595**	**1,733**	**17,920**	**21,688**	**4,293**
	PROJECT TOTAL	**6,595**	**6,488**	**21,473**	**25,759**	**5,144**

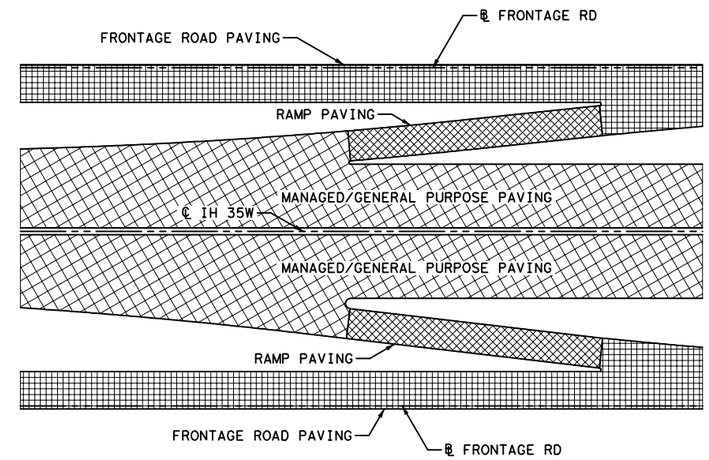

TYPICAL MAINLANE/RAMP/FRONTAGE ROAD PAVING LIMITS

KENNEDY CONSULTING
TBPE REGISTRATION NO. F-926

Texas Department of Transportation
© 2012

IH 35W FROM NORTH TARRANT PKWY TO IH 820

QUANTITY SUMMARY

DIRECT CONNECTOR & RAMP PAVEMENT

SHEET 5 OF 7

DESIGN	FED.RD. DIV.NO.	FEDERAL AID PROJECT NO.		HIGHWAY NO.
KCI	6	(SEE TITLE SHEET)		IH 35W
GRAPHICS KCI	STATE	DISTRICT	COUNTY	SHEET NO.
CHECK KCI	TEXAS	FTW	TARRANT	97
CHECK	CONTROL	SECTION	JOB	
KCI	0014	16	255, ETC.	

FILENAME: S3BSUM00.dgn

DRAWING DATE: 9/10/2012

SUMMARY OF FRONTAGE ROAD AND CROSS STREET PAVING ITEMS

SHEET	LOCATION	247 2056 FL BS (CMP IN PLC)(TY D GR 4)(FNAL POS)	247 2060 FL BS (CMP IN PLC)(TY E GR 4)(FNAL POS)	275 2001 CEMENT	275 2018 CEMENT TREAT (NEW BASE)(36")	260 2016 LIME (HYD, COM, OR QK(SLURRY))	260 2022 LIME TRT (EXIST MATL)(18")	260 2023 LIME TRT (EXIST MATL)(36")	260 2026 LIME TRT (EXIST MATL)(24")
		CY	CY	TON	SY	TON	SY	SY	SY
CSJ: 0081-12-045									
SHEET 1 OF 12	SBFR					62	1,146	0	0
	CSJ: 0081-12-045 TOTAL	**0**	**0**	**0**	**0**	**62**	**1,146**	**0**	**0**
CSJ: 0014-16-255									
SHEET 1 OF 11	NBFR	847				236	3,276	0	822
SHEET 2 OF 11	NBFR	1,343				473	0	0	6,570
SHEET 3 OF 11	NBFR	98				68	0	0	483
SHEET 4 OF 11	NBFR								
SHEET 5 OF 11	NBFR								
SHEET 6 OF 11	NBFR	356	481	30	639	159	0	0	2,045
SHEET 7 OF 11	NBFR	1,162				308	4,802	0	683
SHEET 8 OF 11	NBFR	1,283				333	6,167	0	0
SHEET 9 OF 11	NBFR	982				261	4,834	0	0
SHEET 10 OF 11	NBFR	1,074				542	399	4,819	0
SHEET 11 OF 11	NBFR	956				511	0	4,728	0
SHEET 2 OF 12	SBFR	730				199	3,682	0	0
SHEET 3 OF 12	SBFR	971				262	4,848	0	0
SHEET 4 OF 12	SBFR	976				266	4,935	0	0
SHEET 5 OF 12	SBFR	980				267	4,943	0	0
SHEET 6 OF 12	SBFR	1,496				685	1,833	5,408	0
SHEET 7 OF 12	SBFR								
SHEET 8 OF 12	SBFR								
SHEET 9 OF 12	SBFR								
SHEET 10 OF 12	SBFR	836	584	37	776	231	4,269	0	0
SHEET 11 OF 12	SBFR	820				216	4,000	0	0
SHEET 12 OF 12	SBFR	497				195	1,155	1,231	0
SHEET 1 OF 2	BASSWOOD BLVD	228	259	16	338	30			
SHEET 2 OF 2	BASSWOOD BLVD	225	261	16	340	30			
SHEET 1 OF 2	WESTERN CENTER BLVD					272			
SHEET 2 OF 2	WESTERN CENTER BLVD					77			
SHEET 1 OF 1	FOSSIL CREEK BLVD					26			
	CSJ: 0014-16-255 TOTAL	**15,860**	**1,585**	**99**	**2,093**	**5,647**	**49,143**	**16,186**	**10,603**
	PROJECT TOTAL	**15,860**	**1,585**	**99**	**2,093**	**5,709**	**50,289**	**16,186**	**10,603**

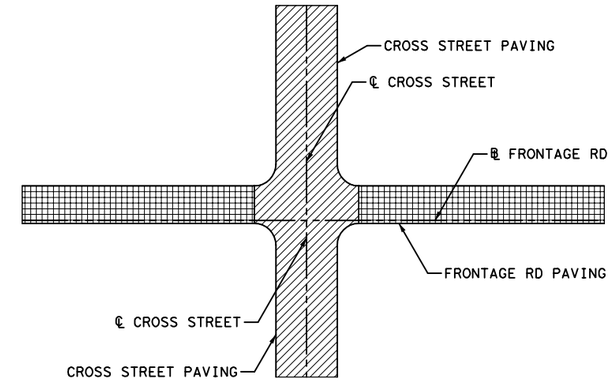

TYPICAL FRONTAGE ROAD/CROSS STREET PAVING LIMITS

FILENAME: S3BSUM00.dgn

DRAWING DATE: 9/10/2012

KENNEDY CONSULTING
TBPE REGISTRATION NO. F-926

Texas Department of Transportation
© 2012

IH 35W FROM NORTH TARRANT PKWY TO IH 820

QUANTITY SUMMARY

FRONTAGE ROAD & CROSS STREET PAVEMENT

SHEET 6 OF 7

DESIGN	FED. RD. DIV. NO.	FEDERAL AID PROJECT NO.		HIGHWAY NO.
KCI	6	(SEE TITLE SHEET)		IH 35W
GRAPHICS KCI	STATE	DISTRICT	COUNTY	SHEET NO.
CHECK KCI	TEXAS	FTW	TARRANT	97A
CHECK	CONTROL	SECTION	JOB	
KCI	0014	16	255, ETC.	

SUMMARY OF FRONTAGE ROAD AND CROSS STREET PAVING ITEMS

SHEET	LOCATION	260 2028 LIME TRT (EXST MATL) (8")	310 2026 PRIME COAT (EC-30)	346 2030 STONE-MTRX-ASPH SMA-F SAC-B PG76-22	360 2001 CONC PVMT (CONT REINF-CRCP) (8")	360 2003 CONC PVMT (CONT REINF-CRCP) (10")	360 2065 CONC PVMT (CONT REINF - CRCP) (7")	3224 2008 D-GR HMA (QCQA) TY-B PG64-22	3224 2040 D-GR HMA (QCQA) TY-D PG64-22
		SY	GAL	TON	SY	SY	SY	TON	TON
CSJ: 0081-12-045									
SHEET 1 OF 12	SBFR					1,014		254	
	CSJ: 0081-12-045 TOTAL	**0**	**0**	**0**	**0**	**1,014**	**0**	**254**	**0**
CSJ: 0014-16-255									
SHEET 1 OF 11	NBFR		1,049	251				1,005	
SHEET 2 OF 11	NBFR		1,569	376				1,503	
SHEET 3 OF 11	NBFR	1,373	115	28	1,038			397	
SHEET 4 OF 11	NBFR				675			172	
SHEET 5 OF 11	NBFR								
SHEET 6 OF 11	NBFR	487	489	117	365			563	
SHEET 7 OF 11	NBFR		1,547	371				1,483	
SHEET 8 OF 11	NBFR		1,557	373				1,492	
SHEET 9 OF 11	NBFR		1,128	270				1,081	
SHEET 10 OF 11	NBFR		1,242	298				1,190	
SHEET 11 OF 11	NBFR		1,178	282				1,129	
SHEET 2 OF 12	SBFR		806	193				772	
SHEET 3 OF 12	SBFR		1,086	260				1,041	
SHEET 4 OF 12	SBFR		1,078	258				1,033	
SHEET 5 OF 12	SBFR		1,082	259				1,037	
SHEET 6 OF 12	SBFR	93	1,824	437	54			1,767	
SHEET 7 OF 12	SBFR				2,596				
SHEET 8 OF 12	SBFR								
SHEET 9 OF 12	SBFR				60				
SHEET 10 OF 12	SBFR		1,118	268				1,072	
SHEET 11 OF 12	SBFR		972	233				931	
SHEET 12 OF 12	SBFR		601	144				576	
SHEET 1 OF 2	BASSWOOD BLVD	1,260	362	0	1,069				277
SHEET 2 OF 2	BASSWOOD BLVD	1,252	359	0	1,058				275
		0		0					
SHEET 1 OF 2	WESTERN CENTER BLVD	11,315	3,320	0	10,416				2,545
SHEET 2 OF 2	WESTERN CENTER BLVD	3,197	905	0	2,559				694
		0		0					
SHEET 1 OF 1	FOSSIL CREEK BLVD	1,069	308	0			983		236
	CSJ: 0014-16-255 TOTAL	**20,046**	**23,695**	**4,418**	**19,890**	**0**	**983**	**18,244**	**4,027**
	PROJECT TOTAL	**20,046**	**23,695**	**4,418**	**19,890**	**1,014**	**983**	**18,498**	**4,027**

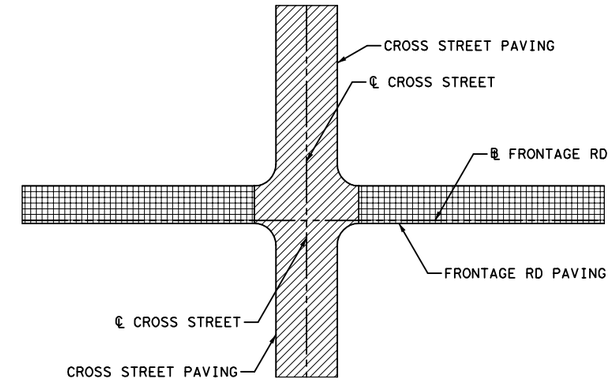

TYPICAL FRONTAGE ROAD/CROSS STREET PAVING LIMITS

FILENAME: S3BSUM00.dgn

DRAWING DATE: 9/10/2012

KENNEDY CONSULTING
TBPE REGISTRATION NO. F-926

Texas Department of Transportation
© 2012

IH 35W FROM NORTH TARRANT PKWY TO IH 820

QUANTITY SUMMARY

FRONTAGE ROAD & CROSS STREET PAVEMENT (CONT'D)

SHEET 7 OF 7

DESIGN	FED. RD. DIV. NO.	FEDERAL AID PROJECT NO.		HIGHWAY NO.
KCI	6	(SEE TITLE SHEET)		IH 35W
GRAPHICS KCI	STATE	DISTRICT	COUNTY	SHEET NO.
CHECK KCI	TEXAS	FTW	TARRANT	97B
CHECK	CONTROL	SECTION	JOB	
KCI	0014	16	255, ETC.	

SUMMARY OF EARTHWORK (IH 35W)

ROADWAY SEGMENT	110 2001 EXCAVATION (ROADWAY)	132 2006 EMBANKMENT (FINAL) (DENS CONT) (TY C)	132 2025 EMBANKMENT (FINAL) (DENS CONT) (TY C1)
	CY	CY	CY
CSJ: 0081-12-045			
1401+00.00	158.65	0	167
1401+50.00	409.3	340	334
1402+00.00	449	342	360
1402+50.00	477.7	341	386
1403+00.00	551.7	319	426
1403+50.00	577.6	228	368
1404+00.00	553.3	160	294
1404+50.00	599.8	265	404
1405+00.00	638.55	371	509
1405+50.00	677.55	369	529
1406+00.00	715.65	353	547
1406+50.00	763.2	330	556
1407+00.00	841.9	308	582
1407+50.00	908.25	289	615
1408+00.00	1090.4	269	752
1408+50.00	1283.95	253	881
1409+00.00	1338.45	252	891
1409+50.00	1360.85	256	903
1410+00.00	1452.55	266	929
1410+50.00	1581.75	273	965
1411+00.00	1729.1	273	1018
1411+50.00	1936.9	277	1082
1412+00.00	2080.65	285	1087
1412+50.00	2165.85	292	1083
1413+00.00	1774.65	272	667
1413+50.00	1326.55	241	229
1414+00.00	1283.35	235	233
1414+50.00	1739.15	236	757
1415+00.00	1711.25	196	755
1415+50.00	1214.35	155	233
1416+00.00	1927.25	239	915
1416+50.00	2704.9	299	1702
1417+00.00	2783.9	279	1762
1417+50.00	2827.95	277	1761
1418+00.00	2888.25	291	1815
1418+50.00	2867.55	299	1789
1419+00.00	3079.5	258	1970
1419+50.00	3315.15	237	2177
1420+00.00	3269.35	265	2133
1420+50.00	3233.2	294	2096
1421+00.00	3250.15	333	2077
1421+50.00	3262.45	381	2051
1422+00.00	3276.8	408	2044
1422+50.00	3261.35	440	2033
1423+00.00	3219.3	490	2014
1423+50.00	3275.95	528	2101
1424+00.00	3309.1	565	2158
1424+50.00	3244.95	595	2101
1425+00.00	3068.4	614	2032
1425+50.00	2906.05	628	1959
1426+00.00	2892.3	635	1914
1426+50.00	2042.15	642	957
1427+00.00	1208	664	
1427+50.00	1268	692	
1428+00.00	1368	713	
1428+50.00	1476	715	
1429+00.00	1550	713	
1429+50.00	1455	819	
1430+00.00	1410	837	
1430+50.00	1075	639	
1431+00.00	547	534	
1431+50.00	405	517	
1432+00.00	384	454	
1432+50.00	465	391	
1433+00.00	589	283	
1433+50.00	806	183	
1434+00.00	978	138	
1434+50.00	863	99	
1435+00.00	804	70	
1435+50.00	942	37	
SUBTOTAL	**116,891**	**25,541**	**60,103**

SUMMARY OF EARTHWORK (IH 35W)

ROADWAY SEGMENT	110 2001 EXCAVATION (ROADWAY)	132 2006 EMBANKMENT (FINAL) (DENS CONT) (TY C)	132 2025 EMBANKMENT (FINAL) (DENS CONT) (TY C1)
	CY	CY	CY
1436+00.00	1079	20	0
1436+50.00	1625	649	0
1437+00.00	1913	1579	0
1437+50.00	1989	1843	0
1438+00.00	2341	1588	0
1438+50.00	2369	1495	0
1439+00.00	2240	1868	0
1439+50.00	2315	2272	0
1440+00.00	2167	2680	0
1440+50.00	1706	3186	0
1441+00.00	1444	3775	0
1441+50.00	1407	4262	0
1442+00.00	2809	3539	0
1442+50.00	4603	3175	0
1443+00.00	5362	4154	0
1443+50.00	6386	3704	0
1444+00.00	6792	3023	0
1444+50.00	5385	3590	0
1445+00.00	3087	4107	0
1445+50.00	1786	4404	0
SUBTOTAL	**58,805**	**54,913**	**0**
CSJ: 0081-12-045 TOTAL	**185,991**	**70,074**	**67,820**
CSJ: 0014-16-255			
1446+00.00	2498	4652	0
1446+50.00	4411	4850	0
1447+00.00	6044	4981	0
1447+50.00	6204	5552	0
1448+00.00	5413	5641	0
1448+50.00	4591	4881	0
1449+00.00	4030	4247	0
1449+50.00	3720	3758	0
1450+00.00	3522	3222	0
1450+50.00	3322	2642	0
1451+00.00	3115	2418	0
1451+50.00	3063	2321	0
1452+00.00	2943	2059	0
1452+50.00	2729	1800	0
1453+00.00	2543	2293	0
1453+50.00	2480	3192	0
1454+00.00	2364	3395	0
1454+50.00	2142	3609	0
1455+00.00	1950	3672	0
1455+50.00	1747	3461	0
1456+00.00	1578	3400	0
1456+50.00	1401	2800	0
1457+00.00	1267	2218	0
1457+50.00	1128	2129	0
1458+00.00	1067	2094	0
1458+50.00	1072	1732	0
1459+00.00	963	1442	0
1459+50.00	946	1416	0
1460+00.00	1152	1294	0
1460+50.00	1370	1249	0
1461+00.00	1302	1270	0
1461+50.00	1176	1252	0
1462+00.00	1150	1391	0
1462+50.00	1099	1802	0
1463+00.00	1106	2109	0
1463+50.00	1124	2187	0
1464+00.00	1176	2149	0
1464+50.00	1232	2328	0
1465+00.00	1299	2640	0
1465+50.00	1355	2750	0
1466+00.00	1337	2656	0
1466+50.00	1246	2493	0
1467+00.00	1157	2320	0
1467+50.00	1136	2254	0
1468+00.00	1113	2386	0
1468+50.00	1080	2862	0
1469+00.00	1023	3179	0
SUBTOTAL	**100,886**	**130,448**	**0**

NOTE:
PAY LIMITS FOR EXCAVATION AND EMBANKMENT QUANTITIES ARE TAKEN TO THE BOTTOM OF TOPSOIL AND THEREFORE ACCOUNT FOR SEPARATE PLACEMENT OF TOPSOIL (4").

KENNEDY CONSULTING
TBPE REGISTRATION NO. F-926

Texas Department of Transportation
© 2012

IH 35W FROM NORTH TARRANT PKWY TO IH 820

QUANTITY SUMMARY

IH 35W

EARTHWORK

SHEET 1 OF 4

DESIGN	FED. RD. DIV. NO.	FEDERAL AID PROJECT NO.		HIGHWAY NO.
KCI	6	(SEE TITLE SHEET)		IH 35W
GRAPHICS KCI	STATE	DISTRICT	COUNTY	SHEET NO.
CHECK KCI	TEXAS	FTW	TARRANT	98
CHECK KCI	CONTROL 0014	SECTION 16	JOB 255, ETC.	

DRAWING DATE: 7/31/2012 FILENAME: S3BSUM00.dgn

SUMMARY OF EARTHWORK (IH 35W)

ROADWAY SEGMENT	110 2001 EXCAVATION (ROADWAY)	132 2006 EMBANKMENT (FINAL) (DENS CONT) (TY C)	132 2025 EMBANKMENT (FINAL) (DENS CONT) (TY C1)
	CY	CY	CY
1469+50.00	965	3028	0
1470+00.00	947	2776	0
1470+50.00	885	2344	0
1471+00.00	784	2047	0
1471+50.00	738	1924	0
1472+00.00	820	1787	131
1472+50.00	966	1682	275
1473+00.00	993	1642	287
1473+50.00	1029	1662	286
1474+00.00	1159	1696	281
1474+50.00	1385	1716	426
1475+00.00	1388	1707	451
1475+50.00	1332	1721	485
1476+00.00	1214	1730	557
1476+50.00	948	1644	422
1477+00.00	717	1518	227
1477+50.00	437	1426	0
1478+00.00	411	1317	0
1478+50.00	442	1175	0
1479+00.00	473	1039	0
1479+50.00	490	922	0
1480+00.00	508	829	0
1480+50.00	535	762	0
1481+00.00	532	727	0
1481+50.00	527	707	0
1482+00.00	575	695	0
1482+50.00	728	640	0
1483+00.00	933	529	0
1483+50.00	2777	419	1670
1484+00.00	3035	315	1714
1484+50.00	3264	237	1757
1485+00.00	3564	175	1806
1485+50.00	4034	100	1856
1486+00.00	4575	45	1889
1486+50.00	5053	28	1896
1487+00.00	5379	53	1889
1487+50.00	5756	56	1886
1488+00.00	6369	35	1888
1488+50.00	7104	25	1887
1489+00.00	7944	15	1887
1489+50.00	8646	11	1795
1490+00.00	9199	2	1781
1490+50.00	9497	6	1878
1491+00.00	9628	6	1897
1491+50.00	9689	44	1898
1492+00.00	9570	119	1882
1492+50.00	9444	160	1880
1493+00.00	9180	101	1897
1493+50.00	8821	44	1898
1494+00.00	8296	77	1884
1494+50.00	7437	113	1679
1495+00.00	6686	148	1493
1495+50.00	5628	133	1497
1496+00.00	4266	53	1497
1496+50.00	3074	220	1475
1497+00.00	2544	296	1443
1497+50.00	2714	133	1433
1498+00.00	2727	426	1433
1498+50.00	3085	585	1449
1499+00.00	3887	345	1482
1499+50.00	4412	238	1501
1500+00.00	4848	249	1500
1500+50.00	5341	286	1499
1501+00.00	5599	319	1501
1501+50.00	5746	229	1497
1502+00.00	5617	128	1282
1502+50.00	4431	109	0
1503+00.00	4626	63	0
1503+50.00	4869	76	0
1504+00.00	5133	74	0
1504+50.00	5592	35	0
1505+00.00	5891	4	0
1505+50.00	6067	0	0
SUBTOTAL	**283,905**	**47,727**	**68,204**

SUMMARY OF EARTHWORK (IH 35W)

ROADWAY SEGMENT	110 2001 EXCAVATION (ROADWAY)	132 2006 EMBANKMENT (FINAL) (DENS CONT) (TY C)	132 2025 EMBANKMENT (FINAL) (DENS CONT) (TY C1)
	CY	CY	CY
1506+00.00	6336	1	0
1506+50.00	6285	12	0
1507+00.00	6115	27	0
1507+50.00	5975	44	0
1508+00.00	5802	37	0
1508+50.00	5592	10	0
1509+00.00	5238	6	0
1509+50.00	4747	101	0
1510+00.00	4240	325	0
1510+50.00	3972	534	0
1511+00.00	3914	720	0
1511+50.00	3780	971	0
1512+00.00	3565	1261	0
1512+50.00	3208	1277	0
1513+00.00	2863	1023	0
1513+50.00	2634	1162	0
1514+00.00	2827	1354	0
1514+50.00	3394	1262	0
1515+00.00	3422	438	0
1515+50.00	3592	0	0
1516+00.00	3629	0	0
1516+50.00	3592	0	0
1517+00.00	3621	1	0
1517+50.00	3744	1	0
1518+00.00	3780	1	0
1518+50.00	3818	1	0
1519+00.00	3910	0	0
1519+50.00	4029	0	0
1520+00.00	4076	7	0
1520+50.00	4078	10	0
1521+00.00	3358	9	0
1521+50.00	3024	7	0
1522+00.00	3219	4	0
1522+50.00	2603	3	0
1523+00.00	1962	6	0
1523+50.00	2951	17	1354
1524+00.00	2832	22	1357
1524+50.00	2717	24	1355
1525+00.00	2455	299	1311
1525+50.00	2389	534	1264
1526+00.00	2598	431	1268
1526+50.00	2979	340	1276
1527+00.00	3405	258	1274
1527+50.00	3815	176	1272
1528+00.00	4293	242	1276
1528+50.00	4605	184	1604
1529+00.00	4327	510	1584
1529+50.00	4265	862	1756
1530+00.00	4287	902	1918
1530+50.00	3997	828	1853
1531+00.00	3788	813	1809
1531+50.00	3683	777	1876
1532+00.00	3964	765	2363
1532+50.00	4261	759	2894
1533+00.00	4164	751	3017
1533+50.00	3792	760	2801
1534+00.00	2651	787	1976
1534+50.00	877	420	667
1535+00.00	0	0	0
1535+50.00	0	0	0
1536+00.00	707	2154	466
1536+50.00	1581	1190	1374
1537+00.00	2230	1402	1899
1537+50.00	2314	1919	1930
1538+00.00	2209	2117	1859
1538+50.00	2293	2328	1931
1539+00.00	1702	2550	1369
1539+50.00	1702	3055	528
1540+00.00	49	733	0
1540+50.00	0	0	0
1541+00.00	0	0	0
1541+50.00	0	0	0
1542+00.00	559	1805	403
SUBTOTAL	**234,385**	**41,329**	**50,884**

NOTE:
PAY LIMITS FOR EXCAVATION AND EMBANKMENT QUANTITIES ARE TAKEN TO THE BOTTOM OF TOPSOIL AND THEREFORE ACCOUNT FOR SEPARATE PLACEMENT OF TOPSOIL (4").

KENNEDY CONSULTING
TBPE REGISTRATION NO. F-926

Texas Department of Transportation
© 2012

IH 35W FROM NORTH TARRANT PKWY TO IH 820

QUANTITY SUMMARY

IH35W

EARTHWORK

SHEET 2 OF 4

DESIGN	FED. RD. DIV. NO.	FEDERAL AID PROJECT NO.		HIGHWAY NO.
KCI	6	(SEE TITLE SHEET)		IH 35W
GRAPHICS KCI	STATE	DISTRICT	COUNTY	SHEET NO.
CHECK KCI	TEXAS	FTW	TARRANT	99
CHECK KCI	CONTROL	SECTION	JOB	
	0014	16	255, ETC.	

DRAWING DATE: 7/31/2012 FILENAME: S3BSUM00.dgn

SUMMARY OF EARTHWORK (IH 35W)

ROADWAY SEGMENT	110 2001 EXCAVATION (ROADWAY)	132 2006 EMBANKMENT (FINAL) (DENS CONT) (TY C)	132 2025 EMBANKMENT (FINAL) (DENS CONT) (TY C1)
	CY	CY	CY
1542+50.00	2329	2158	1604
1543+00.00	3116	2617	2421
1543+50.00	2974	2225	2480
1544+00.00	3093	1994	2564
1544+50.00	3739	2151	2719
1545+00.00	3726	1993	2719
1545+50.00	3534	1900	2616
1546+00.00	2991	1274	2627
1546+50.00	3032	1193	2642
1547+00.00	3061	1130	2658
1547+50.00	3173	1074	2729
1548+00.00	3250	1004	2761
1548+50.00	2194	875	1648
1549+00.00	1223	736	593
1549+50.00	1372	636	646
1550+00.00	1608	531	721
1550+50.00	1723	417	743
1551+00.00	1691	328	742
1551+50.00	1716	227	787
1552+00.00	1620	108	655
1552+50.00	994	44	0
1553+00.00	1004	25	0
1553+50.00	1009	35	0
1554+00.00	1007	41	0
1554+50.00	996	35	0
1555+00.00	967	21	0
1555+50.00	919	11	0
1556+00.00	889	21	0
1556+50.00	933	39	0
1557+00.00	1036	58	0
1557+50.00	1131	68	0
1558+00.00	1135	70	0
1558+50.00	1013	66	0
1559+00.00	958	51	0
1559+50.00	1029	38	0
1560+00.00	1014	44	0
1560+50.00	1013	124	0
1561+00.00	1173	174	0
1561+50.00	1274	153	0
1562+00.00	1425	136	0
1562+50.00	1471	114	0
1563+00.00	1418	105	0
1563+50.00	1393	89	0
1564+00.00	1305	81	0
1564+50.00	1243	86	0
1565+00.00	1179	81	0
1565+50.00	1206	76	0
1566+00.00	1244	74	0
1566+50.00	1243	63	0
1567+00.00	1229	48	0
1567+50.00	1256	35	0
1568+00.00	1286	29	0
1568+50.00	1297	25	0
1569+00.00	1343	18	0
1569+50.00	1379	15	0
1570+00.00	1421	17	0
1570+50.00	1483	25	0
1571+00.00	1563	27	0
1571+50.00	1607	24	0
1572+00.00	1596	27	0
1572+50.00	1712	23	0
1573+00.00	1877	16	0
1573+50.00	1922	16	0
1574+00.00	1907	19	0
1574+50.00	1913	16	0
1575+00.00	1969	11	0
1575+50.00	2046	7	0
1576+00.00	2077	7	0
1576+50.00	2051	11	0
1577+00.00	2064	14	0
1577+50.00	2126	11	0
1578+00.00	2206	5	0
1578+50.00	2271	0	0
SUBTOTAL	125,387	27,040	37,075

SUMMARY OF EARTHWORK (IH 35W)

ROADWAY SEGMENT	110 2001 EXCAVATION (ROADWAY)	132 2006 EMBANKMENT (FINAL) (DENS CONT) (TY C)	132 2025 EMBANKMENT (FINAL) (DENS CONT) (TY C1)
	CY	CY	CY
1579+00.00	2272	0	0
1579+50.00	2204	2	0
1580+00.00	2126	3	0
1580+50.00	2078	1	0
1581+00.00	2036	0	0
1581+50.00	1993	0	0
1582+00.00	1945	1	0
1582+50.00	1901	1	0
1583+00.00	1884	0	0
1583+50.00	1878	0	0
1584+00.00	1842	0	0
1584+50.00	1805	0	0
1585+00.00	1804	0	0
1585+50.00	1793	0	0
1586+00.00	1813	0	0
1586+50.00	1729	0	0
1587+00.00	1597	0	0
1587+50.00	1578	1	0
1588+00.00	1562	1	0
1588+50.00	1560	4	0
1589+00.00	1527	12	0
1589+50.00	1444	27	0
1590+00.00	1352	45	0
1590+50.00	952	64	0
1591+00.00	561	83	0
1591+50.00	378	87	0
1592+00.00	227	86	0
1592+50.00	244	94	0
1593+00.00	276	91	0
1593+50.00	280	75	0
1594+00.00	284	57	0
1594+50.00	315	43	0
1595+00.00	329	37	0
1595+50.00	298	38	0
1596+00.00	275	41	0
1596+50.00	262	36	0
1597+00.00	251	22	0
1597+50.00	175	15	0
1598+00.00	92	19	0
1598+50.00	78	28	0
1599+00.00	74	35	0
1599+50.00	82	33	0
1600+00.00	87	34	0
1600+50.00	88	38	0
1601+00.00	90	40	0
1601+50.00	87	43	0
1602+00.00	89	41	0
1602+50.00	99	32	0
1603+00.00	71	36	0
1603+50.00	65	71	0
1604+00.00	98	81	0
1604+50.00	95	62	0
1605+00.00	83	62	0
1605+50.00	79	74	0
1606+00.00	79	90	0
1606+50.00	88	110	0
1607+00.00	92	131	0
1607+50.00	86	138	0
1608+00.00	78	121	0
1608+50.00	53	73	0
1609+00.00	0	0	0
SUBTOTAL	48,663	2,359	0
CSJ: 0014-16-255 TOTAL	793,226	248,903	156,163
PROJECT TOTAL	979,217	318,977	223,983

NOTE:
PAY LIMITS FOR EXCAVATION AND EMBANKMENT QUANTITIES ARE TAKEN TO THE BOTTOM OF TOPSOIL AND THEREFORE ACCOUNT FOR SEPARATE PLACEMENT OF TOPSOIL (4").

KENNEDY CONSULTING
TBPE REGISTRATION NO. F-926

Texas Department of Transportation
© 2012

IH 35W FROM NORTH TARRANT PKWY TO IH 820

QUANTITY SUMMARY
US 287, DC 35S-287W,
& CROSS STREET
EARTHWORK

SHEET 3 OF 4

DESIGN	FED. RD. DIV. NO.	FEDERAL AID PROJECT NO.		HIGHWAY NO.
KCI	6	(SEE TITLE SHEET)		IH 35W
GRAPHICS	STATE	DISTRICT	COUNTY	SHEET NO.
KCI	TEXAS	FTW	TARRANT	100
CHECK	CONTROL	SECTION	JOB	
KCI	0014	16	255, ETC.	

FILENAME: S38SUM00.dgn
DRAWING DATE: 7/31/2012

SUMMARY OF EARTHWORK (US 287 & DC 35S-287W)

STATION	110 2001 EXCAVATION (ROADWAY)	132 2006 EMBANKMENT (FINAL) (DENS CONT) (TY C)
	CY	CY
CSJ: 0081-12-045		
DC 35S-287W		
18+50.00	0	0
19+00.00	1016	9
19+50.00	917	4
20+00.00	1071	0
20+50.00	1284	0
21+00.00	1429	0
21+50.00	1461	4
22+00.00	1286	65
22+50.00	1067	161
23+00.00	974	200
23+50.00	1024	166
24+00.00	928	93
24+50.00	615	28
25+00.00	413	30
25+50.00	258	102
26+00.00	193	150
26+50.00	172	132
27+00.00	252	85
CSJ: 0081-12-045 TOTAL	14,360	1,229
CSJ: 0014-16-255		
US 287		
462+50.00	0	0
463+00.00	26	0
463+50.00	27	0
464+00.00	37	3
464+50.00	51	4
465+00.00	52	3
465+50.00	55	1
466+00.00	89	4
466+50.00	125	7
467+00.00	122	6
467+50.00	138	5
468+00.00	151	7
468+50.00	100	30
469+00.00	80	46
469+50.00	94	42
470+00.00	88	41
470+50.00	85	34
471+00.00	84	27
471+50.00	88	32
472+00.00	87	37
472+50.00	84	44
473+00.00	83	50
473+50.00	46	83
474+00.00	14	101
474+50.00	16	79
475+00.00	33	74
475+50.00	70	76
476+00.00	110	107
476+50.00	186	140
477+00.00	136	104
477+50.00	49	58
478+00.00	73	45
478+50.00	114	38
479+00.00	181	48
479+50.00	145	84
480+00.00	72	167
480+50.00	57	235
CSJ: 0014-16-255 TOTAL	3,048	1,862
PROJECT TOTAL	17,408	3,091

SUMMARY OF EARTHWORK (CROSS STREET)

STATION	110 2001 EXCAVATION (ROADWAY)	132 2006 EMBANKMENT (FINAL) (DENS CONT) (TY C)
	CY	CY
CSJ: 0081-12-045		
CSJ: 0081-12-045 TOTAL	0	0
CSJ: 0014-16-255		
WESTERN CENTER BLVD		
12+00.00	0	0
12+50.00	55	4
13+00.00	77	14
13+50.00	0	0
14+00.00	162	72
14+50.00	146	27
15+00.00	256	1
15+50.00	386	0
16+00.00	470	0
16+50.00	520	0
17+00.00	407	7
17+50.00	199	7
18+00.00	85	4
18+50.00	107	6
19+00.00	306	0
SUBTOTAL	3176	142
BASSWOOD BLVD		
17+00.00	0	0
17+50.00	27	623
18+00.00	16	975
18+50.00	0	0
19+00.00	0	0
19+50.00	0	0
20+00.00	0	0
20+50.00	0	0
21+00.00	0	0
21+50.00	0	0
22+00.00	50	8448
22+50.00	26	1279
23+00.00	39	1277
23+50.00	40	594
SUBTOTAL	198	13,196
CSJ: 0014-16-255 TOTAL	3,374	13,338
PROJECT TOTAL	3,374	13,338

NOTE:
PAY LIMITS FOR EXCAVATION AND EMBANKMENT QUANTITIES ARE TAKEN TO THE BOTTOM OF TOPSOIL AND THEREFORE ACCOUNT FOR SEPARATE PLACEMENT OF TOPSOIL (4").

KENNEDY CONSULTING
TBPE REGISTRATION NO. F-926

Texas Department of Transportation
© 2012

IH 35W FROM NORTH TARRANT PKWY TO IH 820

QUANTITY SUMMARY
US 287, DC 35S-287W,
& CROSS STREET
EARTHWORK

SHEET 4 OF 4

DESIGN	FED. RD. DIV. NO.	FEDERAL AID PROJECT NO.		HIGHWAY NO.
KCI	6	(SEE TITLE SHEET)		IH 35W
GRAPHICS KCI	STATE	DISTRICT	COUNTY	SHEET NO.
CHECK KCI	TEXAS	FTW	TARRANT	100A
CHECK KCI	CONTROL 0014	SECTION 16	JOB 255, ETC.	

FILENAME: S3BSUM00.dgn

DRAWING DATE: 7/31/2012

SUMMARY OF MANAGED LANE AND GENERAL PURPOSE ROADWAY ITEMS

SHEET	LOCATION	420 2006 CL C CONC (RAIL FOUNDATION)	432 2002 RIPRAP (CONC) (5 IN)	432 2040 RIPRAP (MOW STRIP) (5 IN)	**450 2013 RAIL (TY SSTR)	514 2004 PERM CONC TRF BARR (SGL SLP) (TY 1) (42")	514 2006 PERM CONC TRF BARR (SGL SLP) (TY 3) (42")	514 2015 PERM CONC TRF BARR (F-SHAPE) (TY 1)	514 2042 PERM CONC TRF BARR (SLG SLP) (TY 1) (MOD)	533 2006 SHOULDER TEXTURING (MILLED) (ASPHALT)
		CY	CY	CY	LF	LF	LF	LF	LF	LF
CSJ: 0081-12-045										
SHEET 1 OF 15	IH 35W - ML			10						813
SHEET 2 OF 15	IH 35W - ML					649				3,699
SHEET 3 OF 15	IH 35W - ML					362				1,449
SHEET 1 OF 22	IH 35W - GP									480
SHEET 2 OF 22	IH 35W - GP			68		710				1,160
SHEET 3 OF 22	IH 35W - GP			18		2,305				3,815
SHEET 4 OF 22	IH 35W - GP					404				810
SHEET 5 OF 22	IH 35W - GP					327				655
SHEET 1 OF 4	GP TRANS			27		755				1,501
SHEET 2 OF 4	GP TRANS			37		827				2,875
SHEET 3 OF 4	GP TRANS			24		816				1,626
SHEET 4 OF 4	GP TRANS			7		132				235
SHEET 1 OF 3	ML TRANS					569				515
SHEET 2 OF 3	ML TRANS		82			2,714				1,033
SHEET 3 OF 3	ML TRANS					702				1,303
	CSJ: 0081-12-045 TOTAL	**0**	**82**	**191**	**0**	**11,272**	**0**	**0**	**0**	**21,969**
CSJ: 0014-16-255										
SHEET 3 OF 15	IH 35W - ML	17		39	119	1,071				3,352
SHEET 4 OF 15	IH 35W - ML	12			86	2,207				4,140
SHEET 5 OF 15	IH 35W - ML					2,402			350	3,407
SHEET 6 OF 15	IH 35W - ML		26	5		1,499	373		1,682	4,801
SHEET 7 OF 15	IH 35W - ML					719	1,116		2,325	3,838
SHEET 8 OF 15	IH 35W - ML		3			1,200	379		2,211	4,800
SHEET 9 OF 15	IH 35W - ML		9		105	2,608			888	4,800
SHEET 10 OF 15	IH 35W - ML				795	2,080				3,289
SHEET 11 OF 15	IH 35W - ML			5		1,195	269			3,436
SHEET 12 OF 15	IH 35W - ML			22		1,200				4,800
SHEET 13 OF 15	IH 35W - ML			24		1,200				4,800
SHEET 14 OF 15	IH 35W - ML			23		1,062	278			4,532
SHEET 15 OF 15	IH 35W - ML					582	376			1,749
SHEET 4 OF 22	IH 35W - GP	11			77	796				1,376
SHEET 5 OF 22	IH 35W - GP			22		874				1,748
SHEET 6 OF 22	IH 35W - GP	17	26	28	429	1,200				2,085
SHEET 7 OF 22	IH 35W - GP			25		464				2,402
SHEET 8 OF 22	IH 35W - GP			26		1,201				3,787
SHEET 9 OF 22	IH 35W - GP			10		288				3,733
SHEET 10 OF 22	IH 35W - GP			15		315				2,405
SHEET 11 OF 22	IH 35W - GP	59		12	420					2,395
SHEET 12 OF 22	IH 35W - GP			10						4,476
SHEET 13 OF 22	IH 35W - GP	86		40	666					1,616
SHEET 14 OF 22	IH 35W - GP		650			869				1,880
SHEET 15 OF 22	IH 35W - GP			5	532					1,971
SHEET 16 OF 22	IH 35W - GP		3			1,709				1,977
SHEET 17 OF 22	IH 35W - GP		4	42		748				1,080
SHEET 18 OF 22	IH 35W - GP					731				1,110
SHEET 19 OF 22	IH 35W - GP		150	75		2,851				4,483
SHEET 20 OF 22	IH 35W - GP		72	25		2,713				3,472
SHEET 21 OF 22	IH 35W - GP		205	28		2,401				4,081
SHEET 22 OF 22	IH 35W - GP			14		742				1,662
SHEET 1 OF 2	GP TRANS			15						1,099
SHEET 2 OF 2	GP TRANS			34						795
SHEET 1 OF 2	US287		238	62						751
SHEET 2 OF 2	US287		47	60						1,813
	CSJ: 0014-16-255 TOTAL	**202**	**1,433**	**666**	**3,229**	**36,927**	**2,791**	**0**	**7,456**	**103,941**
	PROJECT TOTAL	**202**	**1,515**	**857**	**3,229**	**48,199**	**2,791**	**0**	**7,456**	**125,910**

**SEE PLAN AND PROFILE SHEETS FOR LOCATION OF SSTR WITH TRF AND SSTR RW (BTR).

NOTES:

1. REFER TO METAL BEAM GUARD FENCE SUMMARY FOR LOCATION.

KENNEDY CONSULTING
TBPE REGISTRATION NO. F-926

Texas Department of Transportation
© 2012

IH 35W FROM NORTH TARRANT PKWY TO IH 820

QUANTITY SUMMARY

MANAGED LN & GEN PURPOSE LN ROADWAY ITEMS

SHEET 1 OF 6

DESIGN KCI	FED. RD. DIV. NO. 6	FEDERAL AID PROJECT NO. (SEE TITLE SHEET)		HIGHWAY NO. IH 35W
GRAPHICS KCI	STATE	DISTRICT	COUNTY	SHEET NO.
CHECK KCI	TEXAS	FTW	TARRANT	101
CHECK KCI	CONTROL 0014	SECTION 16	JOB 255, ETC.	

FILENAME: S3BSUM00.dgn

DRAWING DATE: 7/31/2012

SUMMARY OF MANAGED LANE AND GENERAL PURPOSE ROADWAY ITEMS

SHEET	LOCATION	540 2002 MTL W-BEAM GD FEN (STEEL POST)	540 2005 TERMINAL ANCHOR SECTION	540 2011 MTL BEAM GD FEN TRANS (THRIE-BEAM)	540 2044 DOWNSTREAM ANCHOR TERMINAL(DAT) SECTION	544 2001 GUARDRAIL END TREATMENT (INSTALL)	545 2001 CRASH CUSH ATTEN (INSTL)
		LF	EA	EA	EA	EA	EA
CSJ: 0081-12-045							
SHEET 1 OF 15	IH 35W - ML	113			1	1	
SHEET 1 OF 15	IH 35W - ML						
SHEET 1 OF 15	IH 35W - ML						
SHEET 1 OF 22	IH 35W - GP						
SHEET 2 OF 22	IH 35W - GP	1,026		1	1	3	
SHEET 3 OF 22	IH 35W - GP	259			1	1	
SHEET 4 OF 22	IH 35W - GP						
SHEET 5 OF 22	IH 35W - GP						
SHEET 1 OF 4	GP TRANS NORTH END	288	1		2	2	
SHEET 2 OF 4	GP TRANS NORTH END	450		1	2	3	1
SHEET 3 OF 4	GP TRANS NORTH END	334		1	1	1	
SHEET 4 OF 4	GP TRANS NORTH END	131					
SHEET 1 OF 3	ML TRANS						
SHEET 2 OF 3	ML TRANS						1
SHEET 3 OF 3	ML TRANS						
	CSJ: 0081-12-045 TOTAL	**2,601**	**1**	**3**	**8**	**11**	**2**
CSJ: 0014-16-255							
SHEET 3 OF 15	IH 35W - ML	475		1	2	3	
SHEET 4 OF 15	IH 35W - ML						
SHEET 5 OF 15	IH 35W - ML						
SHEET 6 OF 15	IH 35W - ML			1		1	
SHEET 7 OF 15	IH 35W - ML						
SHEET 8 OF 15	IH 35W - ML						
SHEET 9 OF 15	IH 35W - ML						
SHEET 10 OF 15	IH 35W - ML						
SHEET 11 OF 15	IH 35W - ML			1		1	
SHEET 12 OF 15	IH 35W - ML	250			2	2	
SHEET 13 OF 15	IH 35W - ML	288			2	2	
SHEET 14 OF 15	IH 35W - ML	275			2	2	
SHEET 15 OF 15	IH 35W - ML						1
SHEET 4 OF 22	IH 35W - GP						
SHEET 5 OF 22	IH 35W - GP	325			1	1	
SHEET 6 OF 22	IH 35W - GP	450			1	1	
SHEET 7 OF 22	IH 35W - GP	313		1	1	2	
SHEET 8 OF 22	IH 35W - GP	313			2	2	
SHEET 9 OF 22	IH 35W - GP	113			1	1	
SHEET 10 OF 22	IH 35W - GP	100		1	1	2	
SHEET 11 OF 22	IH 35W - GP			1		1	
SHEET 12 OF 22	IH 35W - GP	100			1	1	
SHEET 13 OF 22	IH 35W - GP	300		1	1	2	
SHEET 14 OF 22	IH 35W - GP						
SHEET 15 OF 22	IH 35W - GP			1		1	
SHEET 16 OF 22	IH 35W - GP						1
SHEET 17 OF 22	IH 35W - GP	766					
SHEET 18 OF 22	IH 35W - GP						1
SHEET 19 OF 22	IH 35W - GP	1,347		2	1		
SHEET 20 OF 22	IH 35W - GP	213		1	2	3	1
SHEET 21 OF 22	IH 35W - GP	372			1	2	
SHEET 22 OF 22	IH 35W - GP	153			2	1	
SHEET 1 OF 2	GP TRANS SOUTH END	100		1	1	2	
SHEET 2 OF 2	GP TRANS SOUTH END	575	1				
SHEET 1 OF 2	US287	913			5	3	
SHEET 2 OF 2	US287	763			3	5	
	CSJ: 0014-16-255 TOTAL	**8,504**	**1**	**12**	**32**	**41**	**4**
	PROJECT TOTAL	**11,105**	**2**	**15**	**40**	**52**	**6**

NOTES:

1. REFER TO METAL BEAM GUARD FENCE SUMMARY FOR LOCATION.

KENNEDY CONSULTING
TBPE REGISTRATION NO. F-926

Texas Department of Transportation
© 2012

IH 35W FROM NORTH TARRANT PKWY TO IH 820

QUANTITY SUMMARY
MANAGED LN & GEN PURPOSE LN (CON'T)
ROADWAY ITEMS

SHEET 2 OF 6

DESIGN	FED. RD. DIV. NO.	FEDERAL AID PROJECT NO.		HIGHWAY NO.
KCI	6	(SEE TITLE SHEET)		IH 35W
GRAPHICS KCI	STATE	DISTRICT	COUNTY	SHEET NO.
CHECK KCI	TEXAS	FTW	TARRANT	102
CHECK KCI	CONTROL	SECTION	JOB	
	0014	16	255, ETC.	

FILENAME: S3BSUM00.dgn

DRAWING DATE: 7/31/2012

SUMMARY OF DIRECT CONNECTOR AND RAMP ROADWAY ITEMS

SHEET	LOCATION	420 2006 CL C CONC (RAIL FOUNDATION)	432 2002 RIPRAP (CONC) (5 IN)	432 2040 RIPRAP (MOW STRIP) (5 IN)	**450 2013 RAIL (TY SSTR)	514 2004 PERM CONC TRF BARR (SGL SLP) (TY 1) (42")	514 2015 PERM CONC TRF BARR (F-SHAPE) (TY 1)	540 2011 MTL BEAM GD FEN TRANS (THRIE-BEAM)	540 2002 MTL W-BEAM GD FEN (STEEL POST)	540 2044 DOWNSTREAM ANCHOR TERMINAL (DAT) SECTION	544 2001 GUARDRAIL END TREATMENT (INSTALL)	545 2001 CRASH CUSH ATTEN (INSTL)
		CY	CY	CY	LF	LF	LF	EA	LF	EA	EA	EA
CSJ: 0081-12-045												
	CSJ: 0081-12-045 TOTAL	**0**	**0**	**0**	**0**	**0**	**0**	**0**	**0**	**0**	**0**	**0**
CSJ: 0014-16-255												
SHEET 2 OF 2	DC MLN-287W			14		229		1	188		1	
SHEET 1 OF 3	DC 287E-MLS			10				2			2	
SHEET 2 OF 3	DC 287E-MLS					315						
SHEET 3 OF 3	DC 287E-MLS											
SHEET 3 OF 5	DC 35N-287W		41	10				2			2	
SHEET 4 OF 5	DC 35N-287W			10					183	1		
SHEET 5 OF 5	DC 35N-287W			23					280	1	2	
SHEET 2 OF 2	RAMP BB-35S	14			102							
SHEET 1 OF 1	RAMP 35S-WCB		71	25				2	288		2	
SHEET 1 OF 1	RAMP WCB-35S			12					150	1	1	
SHEET 1 OF 3	RAMP BB-MLS			10		130			126		1	1
SHEET 2 OF 3	RAMP BB-MLS			20		180		2	262		1	
SHEET 3 OF 3	RAMP BB-MLS					29						
SHEET 1 OF 1	RAMP WCB-35N	133	10	10	951			2			2	
SHEET 1 OF 3	RAMP MLN-BB											
SHEET 2 OF 3	RAMP MLN-BB											
SHEET 3 OF 3	RAMP MLN-BB					68	65					
SHEET 1 OF 1	RAMP 35N-WCB		112			906						
SHEET 1 OF 2	RAMP 35N-BB	115	87		819							
SHEET 2 OF 2	RAMP 35N-BB					210						
	CSJ: 0014-16-255 TOTAL	**262**	**321**	**144**	**1,872**	**2,067**	**65**	**11**	**1,477**	**3**	**14**	**1**
	PROJECT TOTAL	**262**	**321**	**144**	**1,872**	**2,067**	**65**	**11**	**1,477**	**3**	**14**	**1**

**SEE PLAN AND PROFILE SHEETS FOR LOCATION OF SSTR WITH TRF AND SSTR RW (BTR).

NOTES:

1. REFER TO METAL BEAM GUARD FENCE SUMMARY FOR LOCATION.

KENNEDY CONSULTING
TBPE REGISTRATION NO. F-926

Texas Department of Transportation
© 2012

IH 35W FROM NORTH TARRANT PKWY TO IH 820

QUANTITY SUMMARY

DIRECT CONNECTOR & RAMP ROADWAY ITEMS

SHEET 3 OF 6

DESIGN KCI	FED. RD. DIV. NO.	FEDERAL AID PROJECT NO.		HIGHWAY NO.
GRAPHICS KCI	6	(SEE TITLE SHEET)		IH 35W
	STATE	DISTRICT	COUNTY	SHEET NO.
CHECK KCI	TEXAS	FTW	TARRANT	103
	CONTROL	SECTION	JOB	
CHECK KCI	0014	16	255, ETC.	

FILENAME: S3BSUM00.dgn

DRAWING DATE: 7/31/2012

SUMMARY OF FRONTAGE ROAD ROADWAY ITEMS

SHEET	LOCATION	420 2006 CL C CONC (RAIL FOUNDATION) CY	432 2002 RIPRAP (CONC)(5 IN) CY	432 2040 RIPRAP (MOW STRIP)(5 IN) CY	**450 2013 RAIL (TY SSTR) LF	514 2004 PERM CONC TRF BARR (SGL SLP)(TY 1)(42") LF	528 2006 COLORED TEXTURED CONC (5") SY	529 2004 CONC CURB & GUTTER (TY II) LF	529 2006 CONC CURB (MONO) (TY II) LF	531 2005 CURB RAMPS (TY 1) EA
CSJ: 0081-12-045										
SHEET 1 OF 12	SBFR								53	
	CSJ: 0081-12-045 TOTAL	**0**	**0**	**0**	**0**	**0**	**0**	**0**	**53**	**0**
CSJ: 0014-16-255										
SHEET 1 OF 11	NBFR							889		
SHEET 2 OF 11	NBFR							2,413		
SHEET 3 OF 11	NBFR							178	780	
SHEET 4 OF 11	NBFR	0	48						502	
SHEET 5 OF 11	NBFR	0	9	13						
SHEET 6 OF 11	NBFR		33	18				748	113	
SHEET 7 OF 11	NBFR		35					1,158	650	
SHEET 8 OF 11	NBFR		42				52	1,760	413	2
SHEET 9 OF 11	NBFR		70			68		2,049	342	
SHEET 10 OF 11	NBFR			5		225	38	2,282	239	
SHEET 11 OF 11	NBFR							691		
SHEET 2 OF 12	SBFR							1,791		
SHEET 3 OF 12	SBFR							2,253	225	
SHEET 4 OF 12	SBFR							2,397		
SHEET 5 OF 12	SBFR							2,405		
SHEET 6 OF 12	SBFR							1,784	98	
SHEET 7 OF 12	SBFR								1,189	
SHEET 8 OF 12	SBFR									
SHEET 9 OF 12	SBFR			5						
SHEET 10 OF 12	SBFR		63	5				1,006	86	
SHEET 11 OF 12	SBFR		19	5			35	1,330	465	
SHEET 12 OF 12	SBFR							688	91	
	CSJ: 0014-16-255 TOTAL	**0**	**319**	**51**	**0**	**293**	**125**	**25,822**	**5,193**	**2**
	PROJECT TOTAL	**0**	**319**	**51**	**0**	**293**	**125**	**25,822**	**5,246**	**2**

**SEE PLAN AND PROFILE SHEETS FOR LOCATION OF SSTR WITH TRF AND SSTR RW (BTR).

NOTES:

1. REFER TO METAL BEAM GUARD FENCE SUMMARY FOR LOCATION.

FILENAME: S3BSUM00.dgn

DRAWING DATE: 8/29/2012

KENNEDY CONSULTING
TBPE REGISTRATION NO. F-926

Texas Department of Transportation
© 2012

IH 35W FROM NORTH TARRANT PKWY TO IH 820

QUANTITY SUMMARY

FRONTAGE ROAD
ROADWAY ITEMS

SHEET 4 OF 6

DESIGN	FED.RD. DIV.NO.	FEDERAL AID PROJECT NO.		HIGHWAY NO.
KCI	6	(SEE TITLE SHEET)		IH 35W
GRAPHICS KCI	STATE	DISTRICT	COUNTY	SHEET NO.
CHECK KCI	TEXAS	FTW	TARRANT	104
CHECK	CONTROL	SECTION	JOB	
KCI	0014	16	255, ETC.	

SUMMARY OF FRONTAGE ROAD ROADWAY ITEMS

SHEET	LOCATION	531 2010 CURB RAMPS (TY 7)	531 2013 CURB RAMPS (TY 20)	531 2015 CONC SIDEWALKS (4")	531 2017 CURB RAMPS (TY 21)	531 2020 CURB RAMPS (TY 2)(MOD)	540 2002 MTL W-BEAM GD FEN (STEEL POST)	540 2011 MTL BEAM GD FEN TRANS (THRIE-BEAM)	540 2044 DOWNSTREAM ANCHOR TERMINAL(DAT) SECTION	544 2001 GUARDRAIL END TREATMENT (INSTALL)	545 2001 CRASH CUSH ATTEN (INSTL)
		EA	EA	SY	EA	EA	LF	EA	EA	EA	EA
CSJ: 0081-12-045											
SHEET 1 OF 12	SBFR										
	CSJ: 0081-12-045 TOTAL	**0**	**0**	**0**	**0**	**0**	**0**	**0**	**0**	**0**	**0**
CSJ: 0014-16-255											
SHEET 1 OF 11	NBFR			432							
SHEET 2 OF 11	NBFR			798							
SHEET 3 OF 11	NBFR			510							
SHEET 4 OF 11	NBFR			329							
SHEET 5 OF 11	NBFR			420							
SHEET 6 OF 11	NBFR			580			150	2	1	1	
SHEET 7 OF 11	NBFR			606							
SHEET 8 OF 11	NBFR		1	738							
SHEET 9 OF 11	NBFR			699							
SHEET 10 OF 11	NBFR	2		759	1			1		1	1
SHEET 11 OF 11	NBFR			205							
SHEET 2 OF 12	SBFR			457							
SHEET 3 OF 12	SBFR			772							
SHEET 4 OF 12	SBFR			801							
SHEET 5 OF 12	SBFR			799							
SHEET 6 OF 12	SBFR			800							
SHEET 7 OF 12	SBFR			743							
SHEET 8 OF 12	SBFR			757							
SHEET 9 OF 12	SBFR			753				1		1	
SHEET 10 OF 12	SBFR	1		612		1		1		1	
SHEET 11 OF 12	SBFR	4	1	729	1			1		1	
SHEET 12 OF 12	SBFR			267							
	CSJ: 0014-16-255 TOTAL	**7**	**2**	**13,566**	**2**	**1**	**150**	**6**	**1**	**5**	**1**
PROJECT TOTAL		**7**	**2**	**13,566**	**2**	**1**	**150**	**6**	**1**	**5**	**1**

NOTES:

1. REFER TO METAL BEAM GUARD FENCE SUMMARY FOR LOCATION.

FILENAME: S3BSUM00.dgn

DRAWING DATE: 8/23/2012

KENNEDY CONSULTING
TBPE REGISTRATION NO. F-926

Texas Department of Transportation
© 2012

IH 35W FROM NORTH TARRANT PKWY TO IH 820

QUANTITY SUMMARY

FRONTAGE ROAD (CON'T)
ROADWAY ITEMS

SHEET 5 OF 6

DESIGN	FED.RD. DIV.NO.	FEDERAL AID PROJECT NO.		HIGHWAY NO.
KCI	6	(SEE TITLE SHEET)		IH 35W
GRAPHICS KCI	STATE	DISTRICT	COUNTY	SHEET NO.
CHECK KCI	TEXAS	FTW	TARRANT	105
CHECK KCI	CONTROL	SECTION	JOB	
	0014	16	255, ETC.	

SUMMARY OF CROSS STREET ROADWAY ITEMS

SHEET	LOCATION	432 2002 RIPRAP (CONC)(5 IN)	528 2006 COLORED TEXTURED CONC (5")	529 2006 CONC CURB (MONO) (TY II)	531 2005 CURB RAMPS (TY 1)	531 2006 CURB RAMPS (TY 2)	531 2013 CURB RAMPS (TY 20)	531 2017 CURB RAMPS (TY 21)	531 2062 CURB RAMPS (TY 21)(MOD)	540 2012 MTL BEAM GD FEN TRANS (TL2)	544 2001 GUARDRAIL END TREATMENT (INSTALL)
		CY	SY	LF	EA	EA	EA	EA	EA	EA	EA
CSJ: 0081-12-045											
	CSJ: 0081-12-045 TOTAL	**0**	**0**	**0**	**0**	**0**	**0**	**0**	**0**	**0**	**0**
CSJ: 0014-16-255											
SHEET 1 OF 2	BASSWOOD BLVD	12	574	1,318	4		2			1	1
SHEET 2 OF 2	BASSWOOD BLVD		532	1,045	3	2			1	1	1
SHEET 1 OF 2	WESTERN CENTER BLVD		566	516	11	1		2			
SHEET 2 OF 2	WESTERN CENTER BLVD		1,415	3,453	4						
SHEET 1 OF 1	FOSSIL CREEK BLVD			808							
	CSJ: 0014-16-255 TOTAL	**12**	**3,087**	**7,140**	**22**	**3**	**2**	**2**	**1**	**2**	**2**
	PROJECT TOTAL	**12**	**3,087**	**7,140**	**22**	**3**	**2**	**2**	**1**	**2**	**2**

NOTES:

1. REFER TO METAL BEAM GUARD FENCE SUMMARY FOR LOCATION.

DRAWING DATE: 08/29/2012 FILENAME: S3BSUM00.dgn

KENNEDY CONSULTING
TBPE REGISTRATION NO. F-926

Texas Department of Transportation
© 2012

IH 35W FROM NORTH TARRANT PKWY TO IH 820

QUANTITY SUMMARY

CROSS STREETS
ROADWAY ITEMS

SHEET 6 OF 6

DESIGN KCI	FED. RD. DIV. NO.	FEDERAL AID PROJECT NO.		HIGHWAY NO.
GRAPHICS KCI	6	(SEE TITLE SHEET)		IH 35W
	STATE	DISTRICT	COUNTY	SHEET NO.
CHECK KCI	TEXAS	FTW	TARRANT	106
	CONTROL	SECTION	JOB	
CHECK KCI	0014	16	255, ETC.	

SUMMARY OF MISCELLANEOUS ROADWAY

LOCATION	*216 2001 PROOF ROLLING	*730 2113 FULL-WIDTH MOWING	*734 2002 LITTER REMOVAL	*738 2001 CLEANING/SWEEPING (CENTER MEDIAN)	*738 2003 CLEANING/SWEEPING (OUTSIDE MAIN LANES)	*738 2005 CLEANING/SWEEPING (FRONTAGE ROAD)	*738 2007 CLEANING/SWEEPING (ENTRANCE/EXIT RAMP)	*738 2013 CLEANING/SWEEPING (DIRECT CONNECTOR)	764 2006 STORM SEWER CLEAN(PIPE) (12"-18" DIA)	764 2007 STORM SEWER CLEAN(PIPE) (19"-24" DIA)
	HR	CYC	CYC	CYC	CYC	CYC	CYC	CYC	LF	LF
CSJ: 0081-12-045										
	3									
CSJ: 0081-12-045 TOTAL	3	0	0	0	0	0	0	0	0	0
CSJ: 0014-16-255										
	16	13	38	38	38	38	38	38	1,721	2,716
CSJ: 0014-16-255 TOTAL	16	13	38	38	38	38	38	38	1,721	2,716
PROJECT TOTAL	19	13	38	38	38	38	38	38	1,721	2,716

* FOR CONTRACTOR'S INFORMATION ONLY

SUMMARY OF MISCELLANEOUS ROADWAY

LOCATION	764 2008 STORM SEWER CLEANING(PIPE) (25"-30" DIA)	764 2009 STORM SEWER CLEANING(PIPE) (31"-36" DIA)	764 2010 STORM SEWER CLEANING(PIPE) (37"-42" DIA)	764 2011 STORM SEWER CLEANING(PIPE) (43"-54" DIA)	764 2012 STORM SEWER CLEANING(PIPE) (55"-74" DIA)	764 2013 STORM SEWER CLEANING(PIPE) (75"-96" DIA)	764 2015 STORM SEWER CLEAN(BOX CULV)(6-<12 SF)	764 2016 STORM SEWER CLEAN(BOX CULV)(12-<24 SF)	764 2017 STORM SEWER CLEAN(BOX CULV)(24-<48 SF)
	LF	LF	LF	LF	LF	LF	LF	LF	LF
CSJ: 0081-12-045									
CSJ: 0081-12-045 TOTAL	0	0	0	0	0	0	0	0	0
CSJ: 0014-16-255									
	1,832	2,116	648	418	2,957	590	120	102	325
CSJ: 0014-16-255 TOTAL	1,832	2,116	648	418	2,957	590	120	102	325
PROJECT TOTAL	1,832	2,116	648	418	2,957	590	120	102	325

SUMMARY OF DRIVEWAYS (NORTHBOUND)

ID	LOCATION	DESCRIPTION	530 2010 DRIVEWAYS (CONC)
			SY
CSJ: 0081-12-045			
		CSJ: 0081-12-045 TOTAL	0
CSJ: 0014-12-255			
D-N01A	NBFR	COMMERCIAL	140
D-N01	NBFR	COMMERCIAL	199
D-N02	NBFR	COMMERCIAL	164
D-N03	NBFR	COMMERCIAL	180
D-N04	NBFR	COMMERCIAL	134
D-N05	NBFR	COMMERCIAL	124
D-N06	NBFR	COMMERCIAL	142
D-N07	NBFR	COMMERCIAL	160
D-N08	NBFR	COMMERCIAL	150
D-N09	NBFR	COMMERCIAL	333
D-N10	NBFR	COMMERCIAL	159
D-N11	NBFR	COMMERCIAL	167
D-N12	NBFR	COMMERCIAL	111
D-N13	NBFR	COMMERCIAL	111
D-N14	NBFR	COMMERCIAL	202
		CSJ: 0014-16-255 TOTAL	2,476
		PROJECT TOTAL	2,476

SUMMARY OF DRIVEWAYS (SOUTHBOUND)

ID	LOCATION	DESCRIPTION	530 2010 DRIVEWAYS (CONC)
			SY
CSJ: 0081-12-045			
		CSJ: 0081-12-045 TOTAL	0
CSJ: 0014-12-255			
D-S01A	SBFR	COMMERCIAL	225
D-S01	SBFR	COMMERCIAL	111
D-S02	SBFR	COMMERCIAL	110
D-S03A	SBFR	COMMERCIAL	65
D-S03B	SBFR	COMMERCIAL	65
D-S04	SBFR	COMMERCIAL	99
D-S05	SBFR	COMMERCIAL	132
D-S06	SBFR	COMMERCIAL	238
D-S07	SBFR	COMMERCIAL	99
		CSJ: 0014-16-255 TOTAL	1,144
		PROJECT TOTAL	1,144

KENNEDY CONSULTING
TBPE REGISTRATION NO. F-926

Texas Department of Transportation
© 2012

IH 35W FROM NORTH TARRANT PKWY TO IH 820

QUANTITY SUMMARY

DRIVEWAY & MISCELLANEOUS

SHEET 1 OF 1

DESIGN	FED. RD. DIV. NO.	FEDERAL AID PROJECT NO.		HIGHWAY NO.
KCI	6	(SEE TITLE SHEET)		IH 35W
GRAPHICS KCI	STATE	DISTRICT	COUNTY	SHEET NO.
CHECK KCI	TEXAS	FTW	TARRANT	107
CHECK KCI	CONTROL	SECTION	JOB	
	0014	16	255, ETC.	

DRAWING DATE: 7/31/2012 FILENAME: S3BSUM00.dgn

SUMMARY OF RETAINING WALL ITEMS

ROADWAY SEGMENT	403 2001 TEMPORARY SPL SHORING	416 2002 DRILL SHAFT (24 IN)	416 2003 DRILL SHAFT (30 IN)	416 2004 DRILL SHAFT (36 IN)	416 2005 DRILL SHAFT (42 IN)	423 2001 RETAINING WALL (MSE)	423 2009 RETAINING WALL (SOIL NAILED) (FACIA)	423 2011 RETAINING WALL (DRILL SHAFT) (FACIA)	423 2012 RETAINING WALL (CAST-IN-PLACE)	432 2002 RIPRAP (CONC) (5 IN)	432 2040 RIPRAP (MOW STRIP) (5 IN)	432 2048 RIPRAP (CONC) (FLUME)	450 2013 RAIL (TY SSTR)	450 2026 RAIL (TY PR2)	556 2008 PIPE UNDERDRAINS (TY 8) (6")	4116 2001 SOIL NAIL ANCHORS
	SF	LF	LF	LF	LF	SF	SF	SF	SF	CY	CY	CY	LF	LF	LF	LF
CSJ: 0081-12-045																
CSJ: 0081-12-045 TOTAL	0	0	0	0	0	0	0	0	0	0	0	0	0	0	0	0
CSJ: 0014-16-255																
NORTHBOUND WALLS																
NB01-A						805				1	2	2			91	
NB01-R						1,259					4		107		138	
NB02-A						334				1	1				29	
NB02-L						4,573			1,764		17		549		749	
NB02-R						6,166					17		539		748	
NB03-A						274				1					32	
NB03-L						969							180		175	
NB03-R	9,166					10,391					22		691		692	
NB04			648	1,972				4,116		29	8	56			343	
NB05-A						335				1	1				60	
NB05-L						3,448			1,568		18		444		481	
NB05-R						3,189			1,604				447		455	
NB06-A						428				1					26	
NB06-L						14,885					21		768		835	
NB06-R						17,515					23		763		874	
NB07-A2						660				1					79	
NB07-L						5,925							320		375	
NB08-A						648				1					87	
NB08-L						12,904					18		500		863	
NB09						2,141					10		480		491	
NB10						5,971					23		742		832	
SOUTHBOUND WALLS																
SB01-A						701				2	2				78	
SB01-L						6,241					10		500		522	
SB01-R						5,068			1,268				500		555	
SB02-A						258				1	1				74	
SB02-L						7,102					14		424		510	
SB02-R						1,297					7		204		215	
SB03		1,151		334	1,386		5,915	4,004		24	23	38	538		775	7,776
SB04-A						320				1	1				34	
SB04-L						2,451			1,708				443		407	
SB04-R						4,791			1,800				579		617	
SB05-A						450				1					77	
SB05-L						6,032					16		499		505	
SB05-R						7,860					16		602		668	
SB06-A2						498				1					75	
SB06-R						5,895							340		399	
SB07-A						312				1					80	
SB07-R						8,339					22	51	640		756	
SB08	3,477					4,319					20		650		670	
SB09						1,041					5			147	179	
CSJ: 0014-16-255 TOTAL	**12,643**	**1,151**	**648**	**2,306**	**1,386**	**155,795**	**5,915**	**8,120**	**9,712**	**67**	**322**	**147**	**12,449**	**147**	**15,651**	**7,776**
PROJECT TOTAL	**12,643**	**1,151**	**648**	**2,306**	**1,386**	**155,795**	**5,915**	**8,120**	**9,712**	**67**	**322**	**147**	**12,449**	**147**	**15,651**	**7,776**

LEGEND:

- (A) EDGE OF PROPOSED PAVEMENT
- (B) EDGE OF ULTIMATE PAVEMENT
- (C) 2' RIPRAP (MOW STRIP)(5 IN)
- (D) RIPRAP (CONC)(FLUME)
- (E) RIPRAP (CONC)(5 IN)
- (F) PIPE UNDERDRAINS (TY 8) (6 IN)

NOTES:

1. BOTTOM OF WALL MUST BE BELOW 6:1 SLOPE PROJECTION FROM TOE OF SLOPE OR FROM A DISTANCE OF 2H IN FRONT OF WALL, WHICHEVER IS LESS.
2. COMPACT TOP OF RETAINING WALL SUBGRADE TO FORM 5% GRADE AWAY FROM FACE OF WALL.

KENNEDY CONSULTING
TBPE REGISTRATION NO. F-926

Texas Department of Transportation
© 2012

IH 35W FROM NORTH TARRANT PKWY TO IH 820

QUANTITY SUMMARY
RETAINING WALL

SHEET 1 OF 1

DESIGN KCI	FED. RD. DIV. NO. 6	FEDERAL AID PROJECT NO. (SEE TITLE SHEET)		HIGHWAY NO. IH 35W
GRAPHICS KCI	STATE	DISTRICT	COUNTY	SHEET NO.
CHECK KCI	TEXAS	FTW	TARRANT	108
CHECK KCI	CONTROL 0014	SECTION 16	JOB 255, ETC.	

FILENAME: S3B*RETWALL*SUM01.dgn
DRAWING DATE: 8/23/2012

SUMMARY OF PIPE AND BOX

ITEM NO.			400	400	402	462	462	462	464	464	464	464	464	464	464	464	464
DESCRIPTIVE CODE			2001	2005	2001	2002	2003	2004	2003	2005	2007	2009	2010	2011	2012	2014	2035
ITEM DESCRIPTION			STRUCT EXCAV (CY) *	CEM STABIL BKFL (CY)	TRENCH EXCAVATION PROTECTION (LF)	CONC BOX CULV (3 FT X 3 FT) (LF)	CONC BOX CULV (4 FT X 2 FT) (LF)	CONC BOX CULV (4 FT X 3 FT) (LF)	RC PIPE (CL III) (18 IN) (LF)	RC PIPE (CL III) (24 IN) (LF)	RC PIPE (CL III) (30 IN) (LF)	RC PIPE (CL III) (36 IN) (LF)	RC PIPE (CL III) (42 IN) (LF)	RC PIPE (CL III) (48 IN) (LF)	RC PIPE (CL III) (54 IN) (LF)	RC PIPE (CL III) (66 IN) (LF)	RC PIPE (CL V) (18 IN) (LF)
LOCATION																	
SHEET	FROM NODE	TO NODE															
MANAGED LANES																	
CSJ: 0081-12-045																	
1	01D3	01D4A	146		218						189						
2	01C2	CULV 2A	10		12				9								
3	EXIST	01J8	46		63						53						
3	01A1	CULV 2A	7		9				8								
	TOTALS		209	0	302	0	0	0	17	0	242	0	0	0	0	0	0
CSJ: 0014-16-255																	
5	02B1A	02B2A	30	35						49							
5	02B2A	02B3A	29	31						50							
6	02B3A	02B4A	28	31						50							
6	02B4A	02B5A	27	31						50							
6	02B5A	02B6A	27	31						48							
6	02B6A	02B7A	55	66						99							
6	02B7A	02B11	175	94	52					258							
6	02B8	02B9	137		154					152							
6	02B9	02B10	90		104					101							
6	02B10	02B-OUT	20		22					20							
6	02D-OUT	02D7	10							21							
6	02D7	02D6	130							246							
7	02C1	02C3	41						102								
7	02C3	02C4	60							113							
7	02C4	02C5	93		46						137						
7	02C5	02C-OUT	53		77						75						
7	02E-OUT	02E6	20		37					37							
8	02D6	02D5	156							295							
8	02D5	02D4	117						295								
8	02D4	02D3	117						295								
8	02D3	02D2	117						295								
9	02E6	02E5	78							296							
9	02E5	02E4	234							297							
9	02E4	02E3	156							297							
9	02E3	02E2	156							297							
10	02D2	02D1	117						296								
10	BFC30	BFC29	197		300				298								
11	02E1	02E2	117		296				296								
11	BFD25	BFD24	205		300				297								
12	BFC29	BFC28	197		300				299								
12	BFC28	BFC27	197		300				299								
12	BFC27	BFC26	197		300				299								
12	BFC26	BFC25A	195		350				349								
13	BFD24	BFD23	210		300				297								
13	BFD23	BFD22	208		300				297								
13	BFD22	BFD22A	97		143					139							
13	BFD22A	BFD21	109		157					154							
13	BFD21	BFD20	260		300					298							
14	BFC25A	BFC24A	161		250				248								
14	BFC24A	BFC24	195		300				298								
14	BFC24	BFC23	196		300				298								
14	BFC23	BFC22	196		150				298								
15	BFD20	BFD19	343		300						298						
15	BFD19	BFD18	342		300						298						
15	BFD18	BFD18A	295		300						297						
15	BFD18A	BFD28	318		300						297						
16	BFC22	BFC21	180		250					248							
16	BFC21	BFC20	280		300					298							
16	BFC20	BFC19A	446		375					373							
16	BFC19A	BFC15	161	103	125					123							
17	BFD28	BFD16	340		250						248						
17	BFD16	BFD15	298		200						198						
17	BFD15	BFD26	321		200						198						
17	BFD26	BFD14	337		200						198						
17	BFD14	BFD13	507		300						298						
18	BFC15	BFC13	180	115	159					156							
18	BFC13	BFC11	127	81	120					116							
SHEET TOTAL			9685	617	8517	0	0	0	5156	4681	2542	0	0	0	0	0	0

* FOR CONTRACTOR'S INFORMATION ONLY

I. S. ENGINEERS, LLC

TBPE REG. # F-11657

Texas Department of Transportation

© 2012

IH 35W FROM NORTH TARRANT PKWY TO IH 820

SUMMARY OF DRAINAGE QUANTITIES

PIPE AND BOX SEWER

SHEET 1 OF 18

DESIGN	FED.RD. DIV.NO.	FEDERAL AID PROJECT NO.		HIGHWAY NO.
BV	6	(SEE TITLE SHEET)		IH 35W
GRAPHICS	STATE	DISTRICT	COUNTY	SHEET NO.
ZS	TEXAS	FTW	TARRANT	109
CHECK	CONTROL	SECTION	JOB	
SY	0014	16	255, ETC.	
CHECK				
MNM				

FILENAME: S3BDRNSUM_01.dgn

DRAWING DATE: 7/29/2012

SUMMARY OF PIPE AND BOX

ITEM NO.			400	400	402	462	462	462	464	464	464	464	464	464	464	464	464
DESCRIPTIVE CODE			2001	2005	2001	2002	2003	2004	2003	2005	2007	2009	2010	2011	2012	2014	2035
ITEM DESCRIPTION			STRUCT EXCAV (CY) *	CEM STABIL BKFL (CY)	TRENCH EXCAVATION PROTECTION (LF)	CONC BOX CULV (3 FT X 3 FT) (LF)	CONC BOX CULV (4 FT X 2 FT) (LF)	CONC BOX CULV (4 FT X 3 FT) (LF)	RC PIPE (CL III) (18 IN) (LF)	RC PIPE (CL III) (24 IN) (LF)	RC PIPE (CL III) (30 IN) (LF)	RC PIPE (CL III) (36 IN) (LF)	RC PIPE (CL III) (42 IN) (LF)	RC PIPE (CL III) (48 IN) (LF)	RC PIPE (CL III) (54 IN) (LF)	RC PIPE (CL III) (66 IN) (LF)	RC PIPE (CL V) (18 IN) (LF)
LOCATION																	
SHEET	FROM	TO															
	NODE	NODE															
18	BFC9	BFC7	215	146	149						146						
18	BFC7	BFC5	76	23	120				117								
18	BFC5	BFC3	69		100				97								
18	BFC3	BFC1	74		100				97								
18	OUT-BFI	LAT-BFI1	32		54				54								
18	LAT-BFI1	STA 1538+00	30		158				202								
19	BFD13	BFD4	271	24	177						177						
19	BFD4	BFD4A	35	25	31					9							
19	BFD4A	BFD11	96	60	90					106							
19	BFD11	BFD3	152	95	150					147							
19	BFD3	BFD9	123	80	144				141								
19	BFD9	BFD2	85	17	90				83								
19	OUT-BFH	LAT-BFH1	16		28				28								
19	LAT-BFH1	STA 1538+00	19		136				164								
20	STA 1538+00	PB-BFI1	4						8								
20	PB-BFI1	BFI2	10						40								
20	03D1	PB-03D1	6		6				6								
20	PB-03D1	MH-03D2	372		250				248								
20	MH-03D2	OUT-03D	641		234				230								
20	OUT-03J	PB-03J1	16		6				5								
20	PB-03J1	MH-03J1	282		105				104								
20	MH-03J1	STA 1550+00	186		150				148								
21	STA 1538+00	PB-BFH1	5						30								
21	PB-BFH1	BFH2	10						36								
21	03C1	PB-03C1	12		12				11								
21	PB-03C1	MH-03C2	353		246				243								
21	MH-03C2	OUT-03C	742		272				269								
21	OUT-03I	PB-03I1	25		8					7							
21	PB-03I1	MH-03I1	205		63					63							
21	MH-03I1	STA 1550+00	181		151					148							
22	STA 1550+00	LAT-03J2	126		101				100								
22	LAT-03J2	MH-03J3	53		60				58								
22	MH-03J3	LAT-03J4	31		39				39								
22	LAT-03J4	MH-03J5	219		300				298								
22	MH-03J5	PB-03J6	180		300				298								
22	PB-03J6	03J6	6		13				11								
22	04D1	PB-04D1	30		33				32								
22	PB-04D1	OUT-04D	6		7				6								
22	OUT-04J	STA 1562+00	49		47					46							
23	STA 1550+00	MH-03I2	243		200					199							
23	MH-03I2	LAT-03I3	51		49				48								
23	LAT-03I3	LAT-03I4	51		50				50								
23	LAT-03I4	03I5	296		301				299								
23	04C1	PB-04C1	92		102				101								
23	PB-04C1	OUT-04C	12		12				11								
23	OUT-04I	STA 1562+00	104		76					76							
24	STA 1562+00	MH-04J1	206		198					194							
24	MH-04J1	MH-04J2	291		298					295							
24	MH-04J2	MH-04J3	262		298					295							
24	MH-04J3	MH-04J4	249		298					295							
24	MH-04J4	STA 1574+00	97		114					110							
25	STA 1562+00	04I1	134		101					98							
25	04I1	04I2	405		301					298							
25	04I2	04I3	380		302					299							
25	04I3	04I4	369		301					299							
25	04I4	STA 1574+00	246		201					200							
26	STA 1574+00	MH-04J5	163		187					185							
26	MH-04J5	MH-04J6	256		297					295							
26	MH-04J6	MH-04J7	192		298				296								
26	MH-04J7	PB-04J8	178		300				298								
26	PB-04J8	04J8	7		28				11								
27	STA 1574+00	04I5	121		100					99							
27	04I5	04I6	360		300					299							
27	04I6	04I7	348		300					298							
27	04I7	04I8	281		300				297								
27	04I8	STA 1586+00	182		203				199								
28	STA 1586+00	04I9	90		99				98								
SHEET TOTAL			10709	469	9544	0	0	0	4911	4360	323	0	0	0	0	0	0

* FOR CONTRACTOR'S INFORMATION ONLY

I. S. ENGINEERS, LLC

TBPE REG. # F-11657

Texas Department of Transportation

© 2012

IH 35W FROM NORTH TARRANT PKWY TO IH 820

SUMMARY OF DRAINAGE QUANTITIES

PIPE AND BOX SEWER

SHEET 2 OF 18

DESIGN	FED.RD. DIV.NO.	FEDERAL AID PROJECT NO.		HIGHWAY NO.
BV	6	(SEE TITLE SHEET)		IH 35W
GRAPHICS ZS	STATE	DISTRICT	COUNTY	SHEET NO.
CHECK SY	TEXAS	FTW	TARRANT	110
CHECK MNM	CONTROL	SECTION	JOB	
	0014	16	255, ETC.	

FILENAME: S3BDRNSUM_02.dgn

DRAWING DATE: 7/13/2012

SUMMARY OF PIPE AND BOX

ITEM NO.			400	400	402	462	462	462	464	464	464	464	464	464	464	464	464
DESCRIPTIVE CODE			2001	2005	2001	2002	2003	2004	2003	2005	2007	2009	2010	2011	2012	2014	2035
ITEM DESCRIPTION			STRUCT EXCAV (CY) ✳	CEM STABIL BKFL (CY)	TRENCH EXCAVATION PROTECTION (LF)	CONC BOX CULV (3 FT X 3 FT) (LF)	CONC BOX CULV (4 FT X 2 FT) (LF)	CONC BOX CULV (4 FT X 3 FT) (LF)	RC PIPE (CL III) (18 IN) (LF)	RC PIPE (CL III) (24 IN) (LF)	RC PIPE (CL III) (30 IN) (LF)	RC PIPE (CL III) (36 IN) (LF)	RC PIPE (CL III) (42 IN) (LF)	RC PIPE (CL III) (48 IN) (LF)	RC PIPE (CL III) (54 IN) (LF)	RC PIPE (CL III) (66 IN) (LF)	RC PIPE (CL V) (18 IN) (LF)
LOCATION																	
SHEET	FROM	TO															
	NODE	NODE															
GENERAL PURPOSE LANES																	
1	BFA22	BFA21E	202		361						361						
2	BFD47	BFD44	22		124						374						
2	BFD44	BFD44A	302		52							40					
2	BFD56	BFD55X							31								
2	BFD48	BFD49X							31								
3	BFA29X	BFA26							24								
3	BFA20	BFA17	148													48	
3	BFE18	BFE18X	10						29								
6	BFD7	BFD41	355		279								279				
6	BFD41	BFD12	238		183								181				
6	BFD12	BFD38	329		183									183			
7	BFC10	BFC6	301		229					226							
7	BFC6	BFC2	612		229							217					
7	BFC2	BFC-OUT	429		221							149					
7	OUT-BFJ	MH-BFJ1	40						109								
7	MH-BFJ1	STA 1538+00	25						78								
8	BFD38	BFD32	166		68										66		
8	BFD32	BFD37	265		106										105		
8	BFD37	BFD36	475	199	176										174		
8	BFD36	BFD35	666	321	201										199		
8	BFD35	BFD-OUT	808	501	227										232		
8	OUT-BFG	MH-BFG1	51						145								
8	MH-BFG1	LAT-BFG2	9						27								
8	LAT-BFG2	LAT-BFG3	7						22								
8	LAT-BFG3	STA 1538+00	3						10								
9	STA 1538+00	LAT-BFJ2	7						20								
9	LAT-BFJ2	PB-BFJ3	36						110								
9	PB-BFJ3	BFJ3	9						27								
9	03E1	MHM-03E1	0	6													19
9	MHM-03E1	PB-03E1	39	10	39				40								
9	PB-03E1	LAT-03E2	140		200				200								
9	LAT-03E2	03E4	22		27				26								
9	03E4	LAT-03E3	213		200				200								
9	LAT-03E3	OUT-03E	66		48				48								
9	OUT-03K	PB-03K2	15		10				10								
9	PB-03K2	03K2	46		31				33								
9	03K2	LAT-03K1	106		108				109								
9	LAT-03K1	STA 1550+00	104		84				82								
10	STA 1538+00	LAT-BFG4	10						32								
10	LAT-BFG4	PB-BFG5	19						58								
10	PB-BFG5	BFG5	11						35								
10	03B1	MHM-03B1	0	6													18
10	MHM-03B1	PB-03B1	4	5					7								
10	PB-03B1	LAT-03B2	60	72					112								
10	LAT-03B2	PB-03B2	65	66	89				102								
10	PB-03B2	PB-03B3	9	8	13				13								
10	PB-03B3	MH-03B3	7	6	10				10								
10	MH-03B3	LAT-03B4	95	70	123				122								
10	LAT-03B4	LAT-03B5	108	76	133				133								
10	LAT-03B5	OUT-03B	26	14	28				29								
10	OUT-03H	PB-03H1	5	3	5					5							
10	PB-03H1	03H1	57	36	60					59							
10	03H1	LAT-03H2	35		45					45							
10	LAT-03H2	STA 1550+00	96		124					125							
11	STA 1550+00	03K3	63		53				55								
11	03K3	03K4	380		296				295								
11	03K4	03K5	266		303				298								
12	STA 1550+00	LAT-03H3	14		20					20							
12	LAT-03H3	PB-03H2	10		15					15							
12	PB-03H2	PB-03H3	9		14					14							
12	PB-03H3	PB-03H4	11		16					16							
12	PB-03H4	PB-03H5	9		14					14							
12	PB-03H5	03H4	5		8					8							
12	03H4	03H5	153		174				174								
12	03H5	03H6	199		247				247								
12	03H6	PB-03H6	71		102				101								
12	PB-03H6	PB-03H7	16		24				24								
12	PB-03H7	03H7	95		138				129								
12	04B1	04B2	22		33				32								
12	04B2	04B3	33		48				48								
12	04B3	OUT-04B	24		30				29								
12	OUT-04H	04H1	66		43							42					
12	04H1	STA 1562+00	139		94							91					
SHEET TOTAL			8458	1399	5688	0	0	0	3496	547	735	539	460	183	776	48	37

✳ FOR CONTRACTOR'S INFORMATION ONLY

FILENAME: S3BDRNSUM_03.dgn

DRAWING DATE: 8/20/2012

I. S. ENGINEERS, LLC

TBPE REG. # F-11657

Texas Department of Transportation

© 2012

IH 35W FROM NORTH TARRANT PKWY TO IH 820

SUMMARY OF DRAINAGE QUANTITIES

PIPE AND BOX SEWER

SHEET 3 OF 18

DESIGN	FED.RD. DIV.NO.	FEDERAL AID PROJECT NO.		HIGHWAY NO.
BV	6	(SEE TITLE SHEET)		IH 35W
GRAPHICS	STATE	DISTRICT	COUNTY	SHEET NO.
ZS	TEXAS	FTW	TARRANT	111
CHECK	CONTROL	SECTION	JOB	
SY / MNM	0014	16	255, ETC.	

SUMMARY OF PIPE AND BOX

ITEM NO.			400	400	402	462	462	462	464	464	464	464	464	464	464	464	464
DESCRIPTIVE CODE			2001	2005	2001	2002	2003	2004	2003	2005	2007	2009	2010	2011	2012	2014	2035
ITEM DESCRIPTION			STRUCT EXCAV (CY) *	CEM STABIL BKFL (CY)	TRENCH EXCAVATION PROTECTION (LF)	CONC BOX CULV (3 FT X 3 FT) (LF)	CONC BOX CULV (4 FT X 2 FT) (LF)	CONC BOX CULV (4 FT X 3 FT) (LF)	RC PIPE (CL III) (18 IN) (LF)	RC PIPE (CL III) (24 IN) (LF)	RC PIPE (CL III) (30 IN) (LF)	RC PIPE (CL III) (36 IN) (LF)	RC PIPE (CL III) (42 IN) (LF)	RC PIPE (CL III) (48 IN) (LF)	RC PIPE (CL III) (54 IN) (LF)	RC PIPE (CL III) (66 IN) (LF)	RC PIPE (CL V) (18 IN) (LF)
LOCATION																	
SHEET	FROM	TO															
	NODE	NODE															
13	STA 1562+00	LAT-04H15	16		9							9					
13	LAT-04H15	04H2	76		50							49					
13	04H2	04H3	229		150							148					
13	04H3	PB-04H3	26		22						22						
13	PB-04H3	PB-04H4	13		11						11						
13	PB-04H4	04H4	22		19						18						
13	04H4	04H5	201		150						149						
13	04H5	04H7	584		354						352						
13	04H7	04H8	91		50						48						
13	04H8	04H9	94		48						55						
13	04H9	04H10	430		200						193						
13	04H10	STA 1574+00	294		137						122						
14	STA 1574+00	04H11	431		180						179						
14	04H11	PB-04H5	250		101						101						
14	PB04H5	PB-04H6	37		16						16						
14	PB-04H6	PB-04H7	32		13						13						
14	PB-04H7	PB-04H8	37		16						16						
14	PB-04H8	04H12	480		165						165						
14	04H12	04H13	637		300						298						
14	04H13	LAT-FCB	396		259					259							
14	LAT-FCB	04H14	53		38					38							
14	LAT-FCB	FCB1	49						44								
14	FCB1	FCB2	143						155								
14	FCB2	STA 1586+00	7						9								
15	STA 1586+00	FCB3	25						31								
15	FCB3	FCB4	27						37								
	NORTHBOUND FRONTAGE ROAD																
1	02J1	02J1-OUT	108						142								
1	02H-OUT	02H7	160		108							106					
1	02H7	02H6	307		280						275						
1	02H6	02H5	109		115						105						
1	02H5	02H4	240		295					285							
2	02H4	02H3	195		300				290								
2	02H3	02H2	188		300				290								
2	02H2	02H1	197		305				289								
6	03A1	STA 1538+25	5						10								
7	STA 1538+25	03A2	79						168								
7	03A2	LAT-03A5	139							221							
7	LAT-03A5	03A6	63		69					72							
7	03A6	03A7	101		109					97							
7	03A7	03A8	21		34					24							
7	03A8	03A9	358		309						296						
7	03A9	OUT-03A	72		58						55						
7	OUT-03G	03G1	45		33							31					
7	03G1	03G2	30		36							26					
7	03G2	03G3	133		131							118					
8	03G3	LAT-03G4	103		108							95					
8	LAT-03G4	03G6	13		13							12					
8	03G6	03G7	57		40						67						
8	03G7	03G9	0							50							
8	04A1	MH-04A1	28						60								
8	MH-04A1	STA 1562+25	257		145							140					
9	STA 1562+25	LAT-04A2	312		168							168					
9	LAT-04A2	04A3	73		52							47					
9	04A3	LAT-04A4	395		299							294					
9	LAT-04A4	04A5	69		50							49					
9	04A5	MH-04A2	289		200						191						
9	MH-04A2	04A6	351		245						236						
9	04A6	04A7	131		108						91						
9	04A7	STA 1574+25	97		77						62						
10	STA 1574+25	04A8	185		125						118						
10	04A8	04A9	505		320						308						
10	04A9	04A10	175		135						123						
10	04A10	04A11	79		75						60						
10	04A11	04A12	129		147					137							
10	04A12	04A13	10		20				16								
SHEET TOTAL			10496	0	7097	0	0	0	1541	1183	3745	1292	0	0	0	0	0

* FOR CONTRACTOR'S INFORMATION ONLY

DRAWING DATE: 7/13/2012 FILENAME: S3BDRNSUM_04.dgn

I. S. ENGINEERS, LLC
TBPE REG. # F-11657

Texas Department of Transportation
© 2012

IH 35W FROM NORTH TARRANT PKWY TO IH 820

SUMMARY OF DRAINAGE QUANTITIES

PIPE AND BOX SEWER

SHEET 4 OF 18

DESIGN	FED.RD. DIV.NO.	FEDERAL AID PROJECT NO.		HIGHWAY NO.
BV	6	(SEE TITLE SHEET)		IH 35W
GRAPHICS ZS	STATE	DISTRICT	COUNTY	SHEET NO.
CHECK SY	TEXAS	FTW	TARRANT	112
CHECK MNM	CONTROL 0014	SECTION 16	JOB 255, ETC.	

SUMMARY OF PIPE AND BOX

ITEM NO.			400	400	402	462	462	462	464	464	464	464	464	464	464	464	464
DESCRIPTIVE CODE			2001	2005	2001	2002	2003	2004	2003	2005	2007	2009	2010	2011	2012	2014	2035
ITEM DESCRIPTION			STRUCT EXCAV (CY) *	CEM STABIL BKFL (CY)	TRENCH EXCAVATION PROTECTION (LF)	CONC BOX CULV (3 FT X 3 FT) (LF)	CONC BOX CULV (4 FT X 2 FT) (LF)	CONC BOX CULV (4 FT X 3 FT) (LF)	RC PIPE (CL III) (18 IN) (LF)	RC PIPE (CL III) (24 IN) (LF)	RC PIPE (CL III) (30 IN) (LF)	RC PIPE (CL III) (36 IN) (LF)	RC PIPE (CL III) (42 IN) (LF)	RC PIPE (CL III) (48 IN) (LF)	RC PIPE (CL III) (54 IN) (LF)	RC PIPE (CL III) (66 IN) (LF)	RC PIPE (CL V) (18 IN) (LF)
LOCATION																	
SHEET	FROM NODE	TO NODE															
	SOUTHBOUND FRONTAGE ROAD																
1	02F10	02F1	146		48					267							
1	02F1	02F2	155		90					292							
1	02F2	02F3	155							292							
2	02F3	02F4	155							292							
2	02F4	02F5	233								342						
2	02F5	02F6	233								342						
2	02M2	02M1									200						
3	02F6	02F7	233								342						
3	02F7	OUT-02F	30								40						
3	OUT-02G3	02G13	46							83							
3	02G13	02G29	80						190								
3	02G12	02G28	95								89						
3	02G28	02G10	78							95							
3	02G17	02G16	145								140						
4	02G16	02G26	116							140							
4	02G15	02G9	117								140						
4	02G9	02G7	92						140								
4	02G6	02G5	148								135						
4	02G5	02G4	154								135						
4	02G4	02G3	124							135							
5	02G3	02G2	123							135							
5	02G2	02G1	104						135								
6	BFB43	BFB42	114		120				132								
6	BFB42	EXIST	27							4							
6	BFB41	EXIST	27							10							
6	BFB39	BFB38X								34							
6	BFB37X	BFB36								34							
9	03F1	03F2	35						78								
9	03F2	STA 135+50	47							70							
10	STA 135+50	03F4	9							15							
10	03F4	PB-03F1	5							10							
10	PB-03F1	LAT-03F5	45							70							
10	LAT-03F5	LAT-03F6	23							43							
10	LAT-03F6	MH-03F1	124		130						121						
10	MH-03F1	03F9	214		226						220						
10	03F9	03F10	159		115								108				
10	03F10	03F11	93		65								55				
10	03F11	03F12	132		90								75				
10	03F12	03F13	59		50								30				
10	03F13	OUT-03F	86		55								40				
10	03L1	03L2	66		64								50				
10	03L2	03L3	395		253								232				
11	03L3	LAT-03L4	462		212								202				
11	LAT-03L4	MH-03L1	224		98								96				
11	MH-03L1	PB-03LF1	332		140								136				
11	MH-03LF1	PB-03L2	142										56				
11	PB-03L2	PB-03LF2	202										81				
11	PB-03LF2	PB-03L3	178										62				
11	PB-03L3	03L7	42										16				
11	03L7	03L8	99								45						
	WESTERN CENTER BLVD																
1	LAT-03A5	03A5	91							137							
1	03A5	PB-03A3	7						13								
1	PB-03A3	PB-03A2	31						55								
1	PB-03A2	03A4	64						100								
1	03A4	PB-03A1	23						35								
1	PB-03A1	03A3	20						37								
	US 287																
2	01B4	01B5	334		210		351										
	LATERALS																
1	01D6	01D4B	92		104				123								
1	01C1	01C2	25						36								
1	01J9	01J3	29						46								
1	02B1A	02B1	27	23					56								
1	MHM-02B1	02B1		4													12
1	02B2A	02B2	24	23					58								
1	MHM-02B2	02B2		3													10
SHEET TOTAL			6870	53	2070	0	351	0	1234	2158	2291	0	1241	0	0	0	22

* FOR CONTRACTOR'S INFORMATION ONLY

FILENAME: S3BDRNSUM_05.dgn

DRAWING DATE: 8/27/2012

I. S. ENGINEERS, LLC

TBPE REG. # F-11657

Texas Department of Transportation

© 2012

IH 35W FROM NORTH TARRANT PKWY TO IH 820

SUMMARY OF DRAINAGE QUANTITIES

PIPE AND BOX SEWER

SHEET 5 OF 18

DESIGN	FED.RD. DIV.NO.	FEDERAL AID PROJECT NO.		HIGHWAY NO.
BV	6	(SEE TITLE SHEET)		IH 35W
GRAPHICS	STATE	DISTRICT	COUNTY	SHEET NO.
ZS	TEXAS	FTW	TARRANT	113
CHECK	CONTROL	SECTION	JOB	
SY / MNM	0014	16	255, ETC.	

SUMMARY OF PIPE AND BOX

ITEM NO.			400	400	402	462	462	462	464	464	464	464	464	464	464	464	464
DESCRIPTIVE CODE			2001	2005	2001	2002	2003	2004	2003	2005	2007	2009	2010	2011	2012	2014	2035
ITEM DESCRIPTION			STRUCT EXCAV (CY) *	CEM STABIL BKFL (CY)	TRENCH EXCAVATION PROTECTION (LF)	CONC BOX CULV (3 FT X 3 FT) (LF)	CONC BOX CULV (4 FT X 2 FT) (LF)	CONC BOX CULV (4 FT X 3 FT) (LF)	RC PIPE (CL III) (18 IN) (LF)	RC PIPE (CL III) (24 IN) (LF)	RC PIPE (CL III) (30 IN) (LF)	RC PIPE (CL III) (36 IN) (LF)	RC PIPE (CL III) (42 IN) (LF)	RC PIPE (CL III) (48 IN) (LF)	RC PIPE (CL III) (54 IN) (LF)	RC PIPE (CL III) (66 IN) (LF)	RC PIPE (CL V) (18 IN) (LF)
LOCATION																	
SHEET	FROM NODE	TO NODE															
1	02B3A	02B3	23	21					58								
1	MHM-06B6	02B3		2													8
1	02A11	02A3	539		386			966									
2	02B4A	02B4	24	22	59				58								
2	MHM-02B4	02B4		2													6
2	02B5A	02B5	24	20	58				58								
2	MHM-02B5	02B5		1													4
2	02B6A	02B6	22	21	59				56								
2	MHM-02B6	02B6		1													2
2	02B7A	02B7	29	25	35				51								
2	02B11	02B8	36		35					32							
2	02C7	02C3	8						8								
2	02C3	02C2	28						34								
2	02H7	02H8	48							89							
2	02G33	02G12	65			46											
2	02G12	02G11	11		66					10							
3	BFA24A	BFA25	202		123						242						
3	BFA21	BFA22	116	37	86								85				
3	BFA33	BFA33X	15										10				
3	BFA17	BFA18	164		66					75							
3	MHM-BFA18	BFA18		7													22
3	BFA18	BFA19	215		65					63							
3	MHM-BFA19	BFA19		7													21
3	BFA15	BFA16	20		26					21							
3	BFA16	BFA13	76	29	36					33							
3	MHM-BFA13	BFA13		6													18
3	BFA34	BFA7X	17		20					18							
3	BFC10	BFC10A	48	23	11				21								
3	MHM-BFC10A	BFC10A		6													18
3	BFC7	BFC5A	68		47							44					
3	BFC5A	BFC6	29		22							19					
3	BFC6	BFC8	89	45	39					32							
3	MHM-BFC8	BFC8		3													11
3	BFC2	BFC4	51		36					28							
3	MHM-BFC4	BFC4		1													3
4	BFC19A	BFC18	20		26				23								
4	MHM-BFC14	BFC16		2													
4	BFC15	BFC14	21		28				25								6
4	BFC13	BFC12	21		28				26								
4	BFC11	BFC9	44		28				25								
5	BFD24A	BFD24	9		13				10								
5	BFD20A	BFD20	9		13				11								
5	BFD18A	BFD17	12		16				14								
5	BFD15A	BFD15	19		25				23								
5	BFD38	BFD39	96						62								
5	BFD39	BFD13	42		30				27								
5	BFD10A	BFD11	22		27				25								
5	MHM-BFD10A	BFD10A		2													7
5	BFD5	BFD3	22		27				26								
5	MHM-BFD5	BFD5		1													3
5	BFD8	BFD9	26		31				28								
5	BFD1	BFD2	26		27				25								
6	BFD31	BFD33	95	32	52					50							
6	MHM-BFD31	BFD31		5													15
6	BFD27	BFD7	70	30	43					35							
6	MHM-BFD27	BFD27		4													12
6	BFD6	BFD35	33	27	36					36							
6	MHM-BFD35	BFD35		6													19
6	BFE6X	BFE10	244		183					178							
6	BFF-OUT	BFF1	26						35								
6	MHM-BFD34	BFD34		7													21
6	BFD32	BFD34	57	20	41					24							
6	BFE10	BFE9	76		34					29							
6	MHM-BFE9	BFE9		6													20
12	BFI1	LAT-BFI1	5						38								
12	BFH1	LAT-BFH1	3						27								
7	02G28	02G27	10							10							
7	02G10	02G30	10							10							
7	02G32	02G17	66									49					
	SHEET TOTAL		3050	419	1983	46	0	966	794	773	242	112	95	0	0	0	216

* FOR CONTRACTOR'S INFORMATION ONLY

I. S. ENGINEERS, LLC

TBPE REG. # F-11657

Texas Department of Transportation

© 2012

IH 35W FROM NORTH TARRANT PKWY TO IH 820

SUMMARY OF DRAINAGE QUANTITIES

PIPE AND BOX SEWER

SHEET 6 OF 18

DESIGN	FED.RD. DIV.NO.	FEDERAL AID PROJECT NO.		HIGHWAY NO.
BV	6	(SEE TITLE SHEET)		IH 35W
GRAPHICS	STATE	DISTRICT	COUNTY	SHEET NO.
ZS	TEXAS	FTW	TARRANT	114
CHECK	CONTROL	SECTION	JOB	
SY	0014	16	255, ETC.	
CHECK				
MNM				

FILENAME: S3BDRNSUM_06.dgn

DRAWING DATE: 8/27/2012

SUMMARY OF PIPE AND BOX

ITEM NO.			400	400	402	462	462	462	464	464	464	464	464	464	464	464	464
DESCRIPTIVE CODE			2001	2005	2001	2002	2003	2004	2003	2005	2007	2009	2010	2011	2012	2014	2035
ITEM DESCRIPTION			STRUCT EXCAV (CY) *	CEM STABIL BKFL (CY)	TRENCH EXCAVATION PROTECTION (LF)	CONC BOX CULV (3 FT X 3 FT) (LF)	CONC BOX CULV (4 FT X 2 FT) (LF)	CONC BOX CULV (4 FT X 3 FT) (LF)	RC PIPE (CL III) (18 IN) (LF)	RC PIPE (CL III) (24 IN) (LF)	RC PIPE (CL III) (30 IN) (LF)	RC PIPE (CL III) (36 IN) (LF)	RC PIPE (CL III) (42 IN) (LF)	RC PIPE (CL III) (48 IN) (LF)	RC PIPE (CL III) (54 IN) (LF)	RC PIPE (CL III) (66 IN) (LF)	RC PIPE (CL V) (18 IN) (LF)
LOCATION																	
SHEET	FROM NODE	TO NODE															
7	02G17	02G19	11							10							
7	02G16	02G18	11							10							
7	02G26	02G25	10							10							
7	02G31	02G15	113		65							92					
7	02G15	02G14	15		15					13							
7	02G9	02G8	13							13							
7	02G24	02G6	83									78					
8	02G22	02G23	187		89					259							
8	02A25	02A37	136		84			120									
8	02A20	02A28	51							76							
9	BFG1	MH-BFG1	10						32								
9	BFG2	LAT-BFG2	11						34								
9	BFG3	LAT-BFG3	11						34								
9	BFG4	LAT-BFG4	11						35								
9	BFJ1	MH-BFJ1	9						26								
9	BFJ2	LAT-BFJ2	9						28								
9	03B2	MHM-03B2	0	6													18
9	MHM-03B2	LAT-03B2	5	4	10				8								
9	03B3	MHM-03B3	0	6													18
9	MHM-03B3	MH-03B3	9	8	17				13								
9	03B4	MHM-03B4	0	5													16
9	MHM-03B4	LAT-03B4	14	9	19				17								
9	03B5	MHM-03B5	0	5													15
9	MHM-03B5	LAT-03B5	15	9	20				17								
10	04A2	LAT-04A2	13		15				18								
10	04A4	LAT-04A4	10		15				18								
10	03C2	MH-03C2	3						4								
10	03D2	MH-03D2	4						7								
10	03E2	MHM-03E2	0	6													18
10	MHM-03E2	LAT-03E2	44	10	44				41								
10	03E3	MHM-03E3	0	5													15
10	MHM-03E3	LAT-03E3	59	6	44				41								
10	03H2	MHM-03H2	0	3													9
10	MHM-03H2	LAT-03H2	12	6	21				18								
10	03H3	MHM-03H3	0	2													5
10	MHM-03H3	LAT-03H3	11	4					16								
10	03G4	LAT-03G4	10							17							
10	03LF2	LAT-03LF2	220									64					
10	03F3	03F2	6						12								
10	03F5	LAT-03F5	17						24								
10	03F6	LAT-03F6	63						109								
10	03F7	MH-03F1	9						43								
11	03I1	MH-03I1	8		15				11								
11	03I2	MH-03I2	4		8				5								
11	03I3	LAT-03I3	4		6				4								
11	03I4	LAT-03I4	4		5				3								
11	03J1	MH-03J1	5		11				8								
11	03J2	LAT-03J2	10		13				11								
11	03J3	MH-03J3	7		13				9								
11	03J4	LAT-03J4	8		13				11								
11	03J5	MH-03J5	7		13				10								
11	03K1	LAT-03K1	5		11				8								
11	04H15	LAT-04H15	30		40				38								
11	03L4	LAT-03L4	46						42								
12	04H6	04H3	23		45				42								
12	04J1	MH-04J1	6		14				11								
12	04J2	MH-04J2	5		13				10								
12	04J3	MH-04J3	5		13				9								
12	04J4	MH-04J4	5		12				9								
12	04J5	MH-04J5	6		13				10								
12	04J6	MH-04J6	5		12				8								
12	04J7	MH-04J7	4		11				7								
12	03LF1	LAT-03LF1	59								17						
12	03L1	PB-03L1	17		9								9				
12	PB-03L1	OUT-03L	35		18								18				
12	FCB5	LAT-FCB5	8						18								
12	FCB6	LAT-FCB6	15						31								
SHEET TOTAL			1546	94	776	0	0	120	910	408	17	234	27	0	0	0	114
TOTALS			50814	3051	35678	46	351	1086	18042	14110	9895	2177	1823	183	776	48	389

* FOR CONTRACTOR'S INFORMATION ONLY

FILENAME: S3BDRNSUM*07.dgn

DRAWING DATE: 8/29/2012

I. S. ENGINEERS, LLC

TBPE REG. # F-11657

Texas Department of Transportation

© 2012

IH 35W FROM NORTH TARRANT PKWY TO IH 820

SUMMARY OF DRAINAGE QUANTITIES

PIPE AND BOX SEWER

SHEET 7 OF 18

DESIGN	FED. RD. DIV. NO.	FEDERAL AID PROJECT NO.		HIGHWAY NO.
BV	6	(SEE TITLE SHEET)		IH 35W
GRAPHICS ZS	STATE	DISTRICT	COUNTY	SHEET NO.
CHECK SY	TEXAS	FTW	TARRANT	115
CHECK MNM	CONTROL	SECTION	JOB	
	0014	16	255, ETC.	

SUMMARY OF DRAINAGE STRUCTURES

ITEM NO.		432	465	465	465	465	465	465	465	465	465	465	465	465	465	465	465	467	467	467	467	467	467	467	467	467	479	DIMENSIONS		
DESCRIPTIVE CODE		2002	2005	2077	2081	2084	2089	2092	2032	2035	2036	2038	2039	2291	2292	2030	2737	2152	2155	2177	2234	2236	2240	2290	2292	2297	2001			
ITEM DESCRIPTION		RIPRAP (CONC) (5 IN) (CY)	MANH (COMPL) (TY M) (EA)	INLET (COMPL) (DROP) (TY 1) (EA)	INLET (COMPL) (GRATE) (TY 1) (EA)	INLET (COMPL) (GRATE) (TY2-C) (EA)	MANH (COMPL) (JUNCT BOX) (TY 1) (EA)	MANH (COMPL) (TY 1) (EA)	INLET (COMPL) (CURB) (TY 1) (10'X3')	INLET (COMPL) (CURB) (TY 1) (15'X3')	INLET (COMPL) (CURB) (TY 1) (15'X4')	INLET (COMPL) (CURB) (TY 1) (20'X3')	INLET (COMPL) (CURB) (TY 1) (20'X4')	INLET (COMPL) CI(1)-02 FW (10' X 4') (EA)	INLET (COMPL) CI(1)-02 FW (5' X 3') (EA)	INLET (COMPL) CI(1)-02 FW (5' X 4') (EA)	INLET (COMPL) (TY H WITH LID (EA)	SET (TY I) (S=3FT) (HW=4FT) (6:1) (C) (EA)	SET (TY I) (S=4FT) (HW=4FT) (6:1) (C) (EA)	SET (TY I) (S=4FT) (HW=3FT) (6:1) (P) (EA)	SET (TY II) (18 IN) (RCP) (6:1) (C) (EA)	SET (TY II) (24 IN) (RCP) (6:1) (C) (EA)	SET (TY II) (36 IN) (RCP) (6:1) (C) (EA)	SET (TY II) (30 IN) (RCP) (6:1) (P) (EA)	SET (TY II) (36 IN) (RCP) (6:1) (P) (EA)	SET (TY II) (66 IN) (RCP) (6:1) (P) (EA)	ADJ MANHOLE			
LOCATION																														
SHEET	STRUCTURE ID																											L	W	D
MANAGED LANES																														
CSJ: 0081-12-045																														
1	01D3																							1				16.25	3.50	2.50
1	01D4A																							1				16.25	3.50	2.50
2	01C2	1		1																								5.00	4.00	5.28
3	01J8																							1				16.25	3.50	2.50
3	01A1	1		1																								5.00	4.00	4.82
CSJ: 0081-12-045 TOTALS		2	0	2	0	0	0	0	0	0	0	0	0	0	0	0	0	0	0	0	0	0	0	3	0	0				
CSJ: 0014-16-255																														
5	02B1A							1																				4.00	4.00	4.50
6	02B6A							1																				4.00	4.00	4.50
6	02B7A							1																				4.00	4.00	4.96
6	02B11	1		1																								5.00	4.00	4.50
6	02B8					1																						4.00	4.00	6.43
6	02B9				1																							4.33	4.66	6.45
6	02B10				1																							4.33	4.66	7.14
6	02D7	1		1																								5.00	4.00	6.86
7	02C1				1																							4.33	4.66	4.50
7	02C3				1																							4.33	4.66	5.64
7	02C4				1																							4.33	4.66	7.05
7	02C5				1																							4.33	4.66	8.61
8	02D6	1		1																								5.00	4.00	4.00
8	02D5	1		1																								5.00	4.00	4.00
8	02D4	1		1																								5.00	4.00	3.50
8	02D3	1		1																								5.00	4.00	3.50
9	02E6							1																				4.00	4.00	7.64
9	02E5	1		1																								5.00	4.00	3.50
9	02E4				1																							4.33	4.66	5.00
9	02E3				1																							4.33	4.66	5.00
10	02D2	1		1																								5.00	4.00	3.50
10	02D1				1																							4.33	4.66	4.50
10	BFC30					1																						4.00	4.00	4.50
11	02E2				1																							4.33	4.66	5.00
11	02E1				1																							4.33	4.66	4.50
11	BFD25					1																						4.00	4.00	4.50
12	BFC29					1																						4.00	4.00	4.50
12	BFC28					1																						4.00	4.00	4.50
12	BFC27					1																						4.00	4.00	4.50
12	BFC26					1																						4.00	4.00	4.50
13	BFD24					1																						4.00	4.00	4.94
13	BFD23					1																						4.00	4.00	4.50
13	BFD22					1																						4.00	4.00	4.90
13	BFD22A					1																						4.00	4.00	3.50
13	BFD21					1																						4.00	4.00	4.82
14	BFC25A					1																						4.00	4.00	4.38
14	BFC24A					1																						4.00	4.00	4.47
14	BFC24					1																						4.00	4.00	4.50
14	BFC23					1																						4.00	4.00	4.50
15	BFD20					1																						4.00	4.00	6.37
15	BFD19					1																						4.00	4.00	6.35
15	BFD18	256				1																						4.00	4.00	6.34
15	BFD18A	1		1																								5.00	4.00	4.50
SHEET TOTAL		265	0	9	11	19	0	4	0	0	0	0	0	0	0	0	0	0	0	0	0	0	0	0	0	0	0			

I. S. ENGINEERS, LLC

TBPE REG. # F-11657

Texas Department of Transportation

© 2012

IH 35W FROM NORTH TARRANT PKWY TO IH 820

SUMMARY OF DRAINAGE QUANTITIES

DRAINAGE STRUCTURES

SHEET 8 OF 18

DESIGN	FED.RD. DIV.NO.	FEDERAL AID PROJECT NO.		HIGHWAY NO.
BV	6	(SEE TITLE SHEET)		IH 35W
GRAPHICS ZS	STATE	DISTRICT	COUNTY	SHEET NO.
CHECK SY	TEXAS	FTW	TARRANT	116
CHECK MNM	CONTROL	SECTION	JOB	
	0014	16	255, ETC.	

SUMMARY OF DRAINAGE STRUCTURES

ITEM NO.		432	465	465	465	465	465	465	465	465	465	465	465	465	465	465	465	467	467	467	467	467	467	467	467	467	479	DIMENSIONS		
DESCRIPTIVE CODE		2002	2005	2077	2081	2084	2089	2092	2032	2035	2036	2038	2039	2291	2292	2030	2737	2152	2155	2177	2234	2236	2240	2290	2292	2297	2001			
ITEM DESCRIPTION		RIPRAP (CONC) (5 IN) (CY)	MANH (COMPL) (TY M) (EA)	INLET (COMPL) (DROP) (TY 1) (EA)	INLET (COMPL) (GRATE) (TY 1) (EA)	INLET (COMPL) (GRATE) (TY2-C) (EA)	MANH (COMPL) (JUNCT BOX) (TY 1) (EA)	MANH (COMPL) (TY 1) (EA)	INLET (COMPL) (CURB) (TY 1) (10'X3')	INLET (COMPL) (CURB) (TY 1) (15'X3')	INLET (COMPL) (CURB) (TY 1) (15'X4')	INLET (COMPL) (CURB) (TY 1) (20'X3')	INLET (COMPL) (CURB) (TY 1) (20'X4')	INLET (COMPL) CI(1)-02 FW (10' X 4') (EA)	INLET (COMPL) CI(1)-02 FW (5' X 3') (EA)	INLET (COMPL) CI(1)-02 FW (5' X 4') (EA)	INLET (COMPL) (TY H WITH LID (EA)	SET (TY I) (S=3FT) (HW=4FT) (6:1) (C) (EA)	SET (TY I) (S=4FT) (HW=4FT) (6:1) (C) (EA)	SET (TY I) (S=4FT) (HW=3FT) (6:1) (P) (EA)	SET (TY II) (18 IN) (RCP) (6:1) (C) (EA)	SET (TY II) (24 IN) (RCP) (6:1) (C) (EA)	SET (TY II) (36 IN) (RCP) (6:1) (C) (EA)	SET (TY II) (30 IN) (RCP) (6:1) (P) (EA)	SET (TY II) (36 IN) (RCP) (6:1) (P) (EA)	SET (TY II) (66 IN) (RCP) (6:1) (P) (EA)	ADJ MANHOLE			
LOCATION																														
SHEET	STRUCTURE ID																											L	W	D
16	BFC22					1																						4.00	4.00	5.00
16	BFC21					1																						4.00	4.00	5.00
16	BFC20					1																						4.00	4.00	6.50
16	BFC19A					1																						4.00	4.00	8.42
17	BFD28					1																						4.00	4.00	7.23
17	BFD16					1																						4.00	4.00	8.07
17	BFD15					1																						4.00	4.00	8.78
17	BFD26					1																						4.00	4.00	9.46
17	BFD14					1																						4.00	4.00	9.75
18	BFC15					1																						4.00	4.00	7.63
18	BFC13				1																							4.00	4.00	6.72
18	BFC11				1																							4.00	4.00	7.15
18	BFC9				1																							4.33	4.66	8.75
18	BFC7				1																							4.33	4.66	8.14
18	BFC5				1																							4.33	4.66	4.50
18	BFC3				1																							4.33	4.66	4.95
18	BFC1				1																							4.33	4.66	5.67
18	BFI1				1																							4.33	4.66	6.49
19	BFD13					1																						4.00	4.00	9.63
19	BFD4					1																						4.00	4.00	7.79
19	BFD4A							1																				4.00	4.00	7.75
19	BFD11							1																				4.00	4.00	6.42
19	BFD3					1																						4.00	4.00	6.21
19	BFD9					1																						4.00	4.00	6.42
19	BFD2							1																				4.00	4.00	6.83
19	BFH1				1																							4.33	4.66	5.98
20	BFI2				1																							4.33	4.66	4.00
20	03D1			1																								5.00	4.00	8.00
20	MH-03D2							1																				4.00	4.00	18.80
20	MH-03J1							1																				4.00	4.00	18.39
21	BFH2				1																							4.33	4.66	3.89
21	03C1				1																							4.33	4.66	7.96
21	MH-03C2							1																				4.00	4.00	17.90
21	MH-03I1							1																				4.00	4.00	19.49
22	MH-03J3							1																				4.00	4.00	7.03
22	MH-03J5							1																				4.00	4.00	5.41
22	03J6			1																								5.00	4.00	4.00
22	04D1			1																								5.00	4.00	7.00
23	MH-03I2							1																				4.00	4.00	6.55
23	03I5			1																								5.00	4.00	4.00
23	04C1			1																								5.00	4.00	4.00
24	MH-04J1							1																				4.00	4.00	8.57
24	MH-04J2							1																				4.00	4.00	7.58
24	MH-04J3							1																				4.00	4.00	6.59
24	MH-04J4							1																				4.00	4.00	6.88
25	04I1			1																								5.00	4.00	6.27
25	04I2			1																								5.00	4.00	5.37
25	04I3			1																								5.00	4.00	4.17
25	04I4			1																								5.00	4.00	4.07
26	MH-04J5							1																				4.00	4.00	6.59
26	MH-04J6							1																				4.00	4.00	6.12
26	MH-04J7							1																				4.00	4.00	5.26
26	04J8			1																								5.00	4.00	4.14
27	04I5			1																								5.00	4.00	3.98
SHEET TOTAL		0	0	11	12	14	0	17	0	0	0	0	0	0	0	0	0	0	0	0	0	0	0	0	0	0	0			

I. S. ENGINEERS, LLC

TBPE REG. # F-11657

Texas Department of Transportation

© 2012

IH 35W FROM NORTH TARRANT PKWY TO IH 820

SUMMARY OF DRAINAGE QUANTITIES

DRAINAGE STRUCTURES

SHEET 9 OF 18

DESIGN	FED.RD. DIV.NO.	FEDERAL AID PROJECT NO.		HIGHWAY NO.
BV	6	(SEE TITLE SHEET)		IH 35W
GRAPHICS	STATE	DISTRICT	COUNTY	SHEET NO.
ZS	TEXAS	FTW	TARRANT	117
CHECK	CONTROL	SECTION	JOB	
SY	0014	16	255, ETC.	
CHECK				
MNM				

SUMMARY OF DRAINAGE STRUCTURES

ITEM NO.		432	465	465	465	465	465	465	465	465	465	465	465	465	465	465	465	467	467	467	467	467	467	467	467	467	479	DIMENSIONS		
DESCRIPTIVE CODE		2002	2005	2077	2081	2084	2089	2092	2032	2035	2036	2038	2039	2291	2292	2030	2737	2152	2155	2177	2234	2236	2240	2290	2292	2297	2001			
ITEM DESCRIPTION		RIPRAP (CONC) (5 IN) (CY)	MANH (COMPL) (TY M) (EA)	INLET (COMPL) (DROP) (TY 1) (EA)	INLET (COMPL) (GRATE) (TY 1) (EA)	INLET (COMPL) (GRATE) (TY2-C) (EA)	MANH (COMPL) (JUNCT BOX) (TY 1) (EA)	MANH (COMPL) (TY 1) (EA)	INLET (COMPL) (CURB) (TY 1) (10'X3')	INLET (COMPL) (CURB) (TY 1) (15'X3')	INLET (COMPL) (CURB) (TY 1) (15'X4')	INLET (COMPL) (CURB) (TY 1) (20'X3')	INLET (COMPL) (CURB) (TY 1) (20'X4')	INLET (COMPL) CI(1)-02 FW (10' X 4') (EA)	INLET (COMPL) CI(1)-02 FW (5' X 3') (EA)	INLET (COMPL) CI(1)-02 FW (5' X 4') (EA)	INLET (COMPL) (TY H WITH LID (EA)	SET (TY I) (S=3FT) (HW=4FT) (6:1) (C) (EA)	SET (TY I) (S=4FT) (HW=4FT) (6:1) (C) (EA)	SET (TY I) (S=4FT) (HW=3FT) (6:1) (P) (EA)	SET (TY II) (18 IN) (RCP) (6:1) (C) (EA)	SET (TY II) (24 IN) (RCP) (6:1) (C) (EA)	SET (TY II) (36 IN) (RCP) (6:1) (C) (EA)	SET (TY II) (30 IN) (RCP) (6:1) (P) (EA)	SET (TY II) (36 IN) (RCP) (6:1) (P) (EA)	SET (TY II) (66 IN) (RCP) (6:1) (P) (EA)	ADJ MANHOLE			
LOCATION																														
SHEET	STRUCTURE ID																											L	W	D
27	04I6			1																								5.00	4.00	3.89
27	04I7			1																								5.00	4.00	3.80
27	04I8			1																								5.00	4.00	3.32
28	04I9			1																								5.00	4.00	3.23
GENERAL PURPOSE LANES																														
1	BFA22																							1				16.25	3.50	2.50
1	BFA21E	12																												
2	BFD47																					1						13.00	3.00	2.00
2	BFD44A																								1			19.50	4.33	3.00
2	BFD56								1																			10.00	4.00	5.32
2	BFD48								1																			10.00	4.00	5.25
2	BFD44							1																				4.00	4.00	12.00
3	LINE B DITCH	804																												
3	BFA20																									1		33.00		5.50
3	LINE A DITCH	501																												
3	BFE18	1		1																								5.00	4.00	210.00
5	BFA17						1																					6.66	4.33	6.49
6	BFD7																1											5.00	5.00	6.38
6	BFD41																1											5.00	5.00	5.74
6	BFD12			1																								5.00	4.00	5.44
7	BFC10							1																				4.00	4.00	6.50
7	BFC6							1																				4.00	4.00	11.06
7	BFC2							1																				4.00	4.00	17.90
7	MH-BFJ1							1																				4.00	4.00	8.56
8	BFD38				1																							4.33	4.66	7.48
8	BFD37				1																							4.33	4.66	7.77
8	BFD36					1																						4.00	4.00	9.36
8	BFD35					1																						4.00	4.00	12.92
8	MH-BFG1							1																				4.00	4.00	9.07
9	BFJ3				1																							4.33	4.66	4.00
9	03E1				1																							4.33	4.66	4.00
9	MHM-03E1		1																									3.00	3.00	3.00
9	03E4			1																								4.33	4.66	3.53
9	03K2			1																								5.00	4.00	9.13
10	BFG5				1																							4.33	4.66	4.00
10	03B1				1																							4.33	4.66	4.00
10	MHM-03B1		1																									3.00	3.00	3.00
10	MH-03B3							1																				4.00	4.00	8.18
10	03H1			1																								5.00	4.00	6.11
11	03K3			1																								5.00	4.00	4.36
11	03K4			1																								5.00	4.00	3.56
11	03K5			1																								5.00	4.00	3.97
12	03H4			1																								5.00	4.00	4.89
12	03H5			1																								5.00	4.00	4.44
12	03H6			1																								5.00	4.00	4.08
12	03H7				1																							4.33	4.66	6.00
12	04B1				1																							4.33	4.66	4.00
12	04B2			1																								5.00	4.00	5.00
12	04B3			1																								5.00	4.00	5.76
12	OUT-04B																										1			
12	04H1				1																							4.33	4.66	7.37
13	04H2				1																							4.33	4.66	7.99
13	04H3				1																							4.33	4.66	8.25
13	04H4			1																								5.00	4.00	5.00
13	04H5			1																								5.00	4.00	6.05
SHEET TOTAL		1318	2	19	11	2	1	7	2	0	0	0	0	0	0	0	2	0	0	0	0	1	0	1	1	1	1			

I. S. ENGINEERS, LLC

TBPE REG. # F-11657

Texas Department of Transportation

© 2012

IH 35W FROM NORTH TARRANT PKWY TO IH 820

SUMMARY OF DRAINAGE QUANTITIES

DRAINAGE STRUCTURES

SHEET 10 OF 18

DESIGN	FED.RD. DIV.NO.	FEDERAL AID PROJECT NO.		HIGHWAY NO.
BV	6	(SEE TITLE SHEET)		IH 35W
GRAPHICS	STATE	DISTRICT	COUNTY	SHEET NO.
ZS	TEXAS	FTW	TARRANT	118
CHECK	CONTROL	SECTION	JOB	
SY	0014	16	255, ETC.	
CHECK				
MNM				

FILENAME: S3BDRNSUM_10.dgn

DRAWING DATE: 8/27/2012

SUMMARY OF DRAINAGE STRUCTURES

ITEM NO.		432	465	465	465	465	465	465	465	465	465	465	465	465	465	465	465	467	467	467	467	467	467	467	467	467	479	DIMENSIONS		
DESCRIPTIVE CODE		2002	2005	2077	2081	2084	2089	2092	2032	2035	2036	2038	2039	2291	2292	2030	2737	2152	2155	2177	2234	2236	2240	2290	2292	2297	2001			
ITEM DESCRIPTION		RIPRAP (CONC) (5 IN) (CY)	MANH (COMPL) (TY M) (EA)	INLET (COMPL) (DROP) (TY 1) (EA)	INLET (COMPL) (GRATE) (TY 1) (EA)	INLET (COMPL) (GRATE) (TY2-C) (EA)	MANH (COMPL) (JUNCT BOX) (TY 1) (EA)	MANH (COMPL) (TY 1) (EA)	INLET (COMPL) (CURB) (TY 1) (10'X3')	INLET (COMPL) (CURB) (TY 1) (15'X3')	INLET (COMPL) (CURB) (TY 1) (15'X4')	INLET (COMPL) (CURB) (TY 1) (20'X3')	INLET (COMPL) (CURB) (TY 1) (20'X4')	INLET (COMPL) CI(1)-02 FW (10' X 4') (EA)	INLET (COMPL) CI(1)-02 FW (5' X 3') (EA)	INLET (COMPL) CI(1)-02 FW (5' X 4') (EA)	INLET (COMPL) (TY H WITH LID) (EA)	SET (TY I) (S=3FT) (HW=4FT) (6:1) (C) (EA)	SET (TY I) (S=4FT) (HW=4FT) (6:1) (C) (EA)	SET (TY I) (S=4FT) (HW=3FT) (6:1) (P) (EA)	SET (TY II) (18 IN) (RCP) (6:1) (C) (EA)	SET (TY II) (24 IN) (RCP) (6:1) (C) (EA)	SET (TY II) (36 IN) (RCP) (6:1) (C) (EA)	SET (TY II) (30 IN) (RCP) (6:1) (P) (EA)	SET (TY II) (36 IN) (RCP) (6:1) (P) (EA)	SET (TY II) (66 IN) (RCP) (6:1) (P) (EA)	ADJ MANHOLE			
LOCATION																														
SHEET	STRUCTURE ID																											L	W	D
13	04H7			1																								5.00	4.00	6.01
13	04H8			1																								5.00	4.00	5.49
13	04H9			1																								5.00	4.00	5.43
13	04H10			1																								5.00	4.00	5.47
14	04H11			1																								5.00	4.00	5.58
14	04H12			1																								5.00	4.00	5.70
14	04H13			1																								5.00	4.00	5.83
14	04H14			1																								5.00	4.00	5.34
14	FCB1														1													5.00	3.00	6.98
14	FCB2														1													5.00	3.00	5.54
15	FCB3														1													5.00	3.00	5.13
15	FCB4								1																			5.00	3.00	5.00
NORTHBOUND FRONTAGE ROAD																														
1	02J1	1		1																								5.00	4.00	3.50
1	02H7							1																				4.00	4.00	7.48
1	02H6								1																			10.00	3.00	5.00
1	02H5								1																			10.00	3.00	5.48
1	02H4								1																			10.00	3.00	5.50
2	02H3								1																			10.00	3.00	4.50
2	02H2								1																			10.00	3.00	4.50
2	02H1								1																			10.00	3.00	4.50
6	03A1								1																			10.00	3.00	4.50
7	03A2									1																		15.00	3.00	5.00
7	03A6								1																			10.00	3.00	5.25
7	03A7									1																		15.00	3.00	5.50
7	03A8								1																			10.00	3.00	6.00
7	03A9								1																			10.00	3.00	8.00
7	03G1								1																			10.00	3.00	7.00
7	03G2								1																			10.00	3.00	5.50
7	03G3											1																20.00	3.00	6.00
8	03G6									1																		15.00	3.00	6.00
8	03G7									1																		15.00	3.00	5.00
8	03G9									1																		15.00	3.00	3.50
8	04A1								1																			10.00	3.00	5.00
8	MH-04A1		1																											11.09
9	04A3								1																			10.00	3.00	7.50
9	04A5									1																		15.00	3.00	7.50
9	MH-04A2							1																				4.00	4.00	8.07
9	04A6									1																		15.00	3.00	8.50
9	04A7											1																20.00	3.00	8.50
10	04A8									1																		15.00	3.00	9.00
10	04A9								1																			10.00	3.00	9.00
10	04A10									1																		15.00	3.00	7.25
10	04A11									1																		15.00	3.00	6.40
10	04A12								1																			10.00	3.00	4.50
10	04A13			1																								5.00	4.00	2.25
	SHEET TOTAL	1	1	10	0	0	0	2	17	10	0	2	0	0	3	0	0	0	0	0	0	0	0	0	0	0	0			

FILENAME: S3BDRNSUM_11.dgn

DRAWING DATE: 8/27/2012

I. S. ENGINEERS, LLC

TBPE REG. # F-11657

Texas Department of Transportation

© 2012

IH 35W FROM NORTH TARRANT PKWY TO IH 820

SUMMARY OF DRAINAGE QUANTITIES

DRAINAGE STRUCTURES

SHEET 11 OF 18

DESIGN	FED.RD. DIV.NO.	FEDERAL AID PROJECT NO.		HIGHWAY NO.
BV	6	(SEE TITLE SHEET)		IH 35W
GRAPHICS	STATE	DISTRICT	COUNTY	SHEET NO.
ZS	TEXAS	FTW	TARRANT	119
CHECK	CONTROL	SECTION	JOB	
SY	0014	16	255, ETC.	
CHECK				
MNM				

SUMMARY OF DRAINAGE STRUCTURES

ITEM NO.		432	465	465	465	465	465	465	465	465	465	465	465	465	465	465	465	467	467	467	467	467	467	467	467	467	479	DIMENSIONS		
DESCRIPTIVE CODE		2002	2005	2077	2081	2084	2089	2092	2032	2035	2036	2038	2039	2291	2292	2030	2737	2152	2155	2177	2234	2236	2240	2290	2292	2297	2001			
ITEM DESCRIPTION		RIPRAP (CONC) (5 IN) (CY)	MANH (COMPL) (TY M) (EA)	INLET (COMPL) (DROP) (TY 1) (EA)	INLET (COMPL) (GRATE) (TY 1) (EA)	INLET (COMPL) (GRATE) (TY2-C) (EA)	MANH (COMPL) (JUNCT BOX) (TY 1) (EA)	MANH (COMPL) (TY 1) (EA)	INLET (COMPL) (CURB) (TY 1) (10'X3')	INLET (COMPL) (CURB) (TY 1) (15'X3')	INLET (COMPL) (CURB) (TY 1) (15'X4')	INLET (COMPL) (CURB) (TY 1) (20'X3')	INLET (COMPL) (CURB) (TY 1) (20'X4')	INLET (COMPL) CI(1)-02 FW (10' X 4') (EA)	INLET (COMPL) CI(1)-02 FW (5' X 3') (EA)	INLET (COMPL) CI(1)-02 FW (5' X 4') (EA)	INLET (COMPL) (TY H WITH LID (EA)	SET (TY I) (S=3FT) (HW=4FT) (6:1) (C) (EA)	SET (TY I) (S=4FT) (HW=4FT) (6:1) (C) (EA)	SET (TY I) (S=4FT) (HW=3FT) (6:1) (P) (EA)	SET (TY II) (18 IN) (RCP) (6:1) (C) (EA)	SET (TY II) (24 IN) (RCP) (6:1) (C) (EA)	SET (TY II) (36 IN) (RCP) (6:1) (C) (EA)	SET (TY II) (30 IN) (RCP) (6:1) (P) (EA)	SET (TY II) (36 IN) (RCP) (6:1) (P) (EA)	SET (TY II) (66 IN) (RCP) (6:1) (P) (EA)	ADJ MANHOLE	L	W	D
LOCATION																														
SHEET	STRUCTURE ID																													
SOUTHBOUND FRONTAGE RD																														
1	O2F10			1																								5.00	4.00	4.46
1	O2F1								1																			10.00	3.00	5.00
1	O2F2														1													5.00	3.00	5.00
1	O2F3								1																			10.00	3.00	5.00
2	O2F4														1													5.00	3.00	5.50
2	O2F5								1																			10.00	3.00	5.50
2	O2F6														1													5.00	3.00	5.50
2	O2M2																							1				16.25	3.50	2.50
3	O2M1																							1				16.25	3.50	2.50
3	O2F7													1														10.00	4.00	8.16
3	O2G13								1																			10.00	3.00	6.49
3	O2G29													1														10.00	4.00	4.00
3	O2G12													1														10.00	4.00	6.03
3	O2G28															1												5.00	4.00	5.53
3	O2G10														1													5.00	3.00	5.04
3	O2G17													1														10.00	4.00	6.00
4	O2G16													1														10.00	4.00	5.54
4	O2G26								1																			10.00	4.00	4.50
4	O2G15								1																			10.00	3.00	5.96
4	O2G9								1																			10.00	3.00	5.46
4	O2G7								1																			10.00	3.00	4.00
4	O2G6										1																	15.00	4.00	5.96
4	O2G5										1																	15.00	4.00	5.67
4	O2G4										1																	15.00	4.00	6.52
4	O2G3									1																		15.00	3.00	5.00
5	O2G2									1																		15.00	3.00	5.00
5	O2G1									1																		15.00	3.00	4.50
5	BFB43								1																			10.00	3.00	4.62
6	BFB42											1																20.00	3.00	4.98
6	BFB41									1																		15.00	3.00	4.94
6	BFB39								1																			10.00	3.00	4.99
6	BFB36								1																			10.00	3.00	9.79
9	03F1									1																		15.00	3.00	3.50
9	03F2								1																			10.00	3.00	3.75
10	03F4								1																			10.00	3.00	3.75
10	MH-03F1							1																				4.00	4.00	6.20
10	03F9															1												5.00	4.00	7.66
10	03F10													1														10.00	4.00	7.74
10	03F11													1														10.00	4.00	7.85
10	03F12												1															20.00	4.00	8.77
10	03F13												1															20.00	4.00	9.75
10	OUT-03F										1																1			
10	03L1																											15.00	4.00	10.00
10	03L2												1															20.00	4.00	7.00
11	03L3												1															20.00	4.00	10.50
11	MH-03L1		1																									5.00	5.00	12.00
11	03L7			1																								5.00	4.00	5.00
11	03L8			1																								5.00	4.00	4.00
SHEET TOTAL		0	1	3	0	0	0	1	13	5	4	1	4	7	4	2	0	0	0	0	0	0	0	2	0	0	1			

I. S. ENGINEERS, LLC

TBPE REG. # F-11657

Texas Department of Transportation

© 2012

IH 35W FROM NORTH TARRANT PKWY TO IH 820

SUMMARY OF DRAINAGE QUANTITIES

DRAINAGE STRUCTURES

SHEET 12 OF 18

DESIGN	FED.RD. DIV.NO.	FEDERAL AID PROJECT NO.		HIGHWAY NO.
BV	6	(SEE TITLE SHEET)		IH 35W
GRAPHICS ZS	STATE	DISTRICT	COUNTY	SHEET NO.
CHECK SY	TEXAS	FTW	TARRANT	120
CHECK	CONTROL	SECTION	JOB	
MNM	0014	16	255, ETC.	

FILENAME: S3BDRNSUM_12.dgn

DRAWING DATE: 8/27/2012

SUMMARY OF DRAINAGE STRUCTURES

ITEM NO.		432	465	465	465	465	465	465	465	465	465	465	465	465	465	465	465	467	467	467	467	467	467	467	467	467	479	DIMENSIONS		
DESCRIPTIVE CODE		2002	2005	2077	2081	2084	2089	2092	2032	2035	2036	2038	2039	2291	2292	2030	2737	2152	2155	2177	2234	2236	2240	2290	2292	2297	2001			
ITEM DESCRIPTION		RIPRAP (CONC) (5 IN) (CY)	MANH (COMPL) (TY M) (EA)	INLET (COMPL) (DROP) (TY 1) (EA)	INLET (COMPL) (GRATE) (TY 1) (EA)	INLET (COMPL) (GRATE) (TY2-C) (EA)	MANH (COMPL) (JUNCT BOX) (TY 1) (EA)	MANH (COMPL) (TY 1) (EA)	INLET (COMPL) (CURB) (TY 1) (10'X3')	INLET (COMPL) (CURB) (TY 1) (15'X3')	INLET (COMPL) (CURB) (TY 1) (15'X4')	INLET (COMPL) (CURB) (TY 1) (20'X3')	INLET (COMPL) (CURB) (TY 1) (20'X4')	INLET (COMPL) CI(1)-02 FW (10' X 4') (EA)	INLET (COMPL) CI(1)-02 FW (5' X 3') (EA)	INLET (COMPL) CI(1)-02 FW (5' X 4') (EA)	INLET (COMPL) (TY H WITH LID (EA)	SET (TY I) (S=3FT) (HW=4FT) (6:1) (C) (EA)	SET (TY I) (S=4FT) (HW=4FT) (6:1) (C) (EA)	SET (TY I) (S=4FT) (HW=3FT) (6:1) (P) (EA)	SET (TY II) (18 IN) (RCP) (6:1) (C) (EA)	SET (TY II) (24 IN) (RCP) (6:1) (C) (EA)	SET (TY II) (36 IN) (RCP) (6:1) (C) (EA)	SET (TY II) (30 IN) (RCP) (6:1) (P) (EA)	SET (TY II) (36 IN) (RCP) (6:1) (P) (EA)	SET (TY II) (66 IN) (RCP) (6:1) (P) (EA)	ADJ MANHOLE			
LOCATION																												L	W	D
SHEET	STRUCTURE ID																													
WESTERN CENTER BLVD																												10.00	3.00	4.50
1	03A5								1																			5.00	3.00	4.50
1	03A4														1													5.00	3.00	3.50
1	03A3														1															
	US 287																											17.50	4.00	3.00
2	01B4																			1								17.50	4.00	3.00
2	01B5																			1										
	LATERALS																											5.00	4.00	3.50
1	01D6	1		1																								9.75	2.50	1.50
1	01D4																				1							5.00	4.00	3.61
1	01C1	1		1																								9.75	2.50	1.50
1	01J9																				1							5.00	4.00	4.29
1	01J3	1		1																								4.00	4.00	17.98
1	02B1					1																						3.00	3.00	11.60
1	MHM-02B1		1																									4.00	4.00	16.36
1	02B2					1																						3.00	3.00	9.80
1	MHM-02B2		1																									4.00	4.00	14.42
1	02B3					1																						3.00	3.00	8.00
1	MHM-06B6		1																									23.00	4.00	4.00
1	02A11																		2									23.00	4.00	4.00
1	02A3																		2									5.00	4.00	4.84
1	02A1	1		1																								5.00	4.00	5.00
1	02A2	1		1																								4.00	4.00	12.67
2	02B4					1																						3.00	3.00	5.70
2	MHM-02B4		1																									4.00	4.00	10.91
2	02B5					1																						3.00	3.00	3.90
2	MHM-02B5		1																									4.00	4.00	9.23
2	02B6					1																						3.00	3.00	2.20
2	MHM-02B6		1																									4.00	4.00	8.19
2	02B7					1																						4.00	4.00	6.49
2	02B8					1																						5.00	4.00	3.50
2	02C7	1		1																								5.00	4.00	3.50
2	02C2	1		1																								13.00	3.00	2.00
2	02H8																					1						22.50	3.00	4.00
2	02G33																	1										5.00	4.00	3.50
2	02G11	1		1																								5.00	4.00	5.00
3	BFA25			2																								4.00	4.00	22.45
3	BFA22							1																				5.00	4.00	4.95
3	BFA33			1																								4.00	4.00	29.32
3	BFA18					1																						3.00	3.00	22.30
3	MHM-BFA18		1																									4.00	4.00	27.65
3	BFA19					1																						3.00	3.00	20.60
3	MHM-BFA18		1																											
SHEET TOTAL		8	8	11	0	10	0	1	1	0	0	0	0	0	2	0	0	1	4	2	2	1	0	0	0	0	0			

FILENAME: S3BDRNSUM_13.dgn

DRAWING DATE: 8/27/2012

I. S. ENGINEERS, LLC

TBPE REG. # F-11657

Texas Department of Transportation

© 2012

IH 35W FROM NORTH TARRANT PKWY TO IH 820

SUMMARY OF DRAINAGE QUANTITIES

DRAINAGE STRUCTURES

SHEET 13 OF 18

DESIGN	FED.RD. DIV.NO.	FEDERAL AID PROJECT NO.		HIGHWAY NO.
BV	6	(SEE TITLE SHEET)		IH 35W
GRAPHICS	STATE	DISTRICT	COUNTY	SHEET NO.
ZS	TEXAS	FTW	TARRANT	121
CHECK	CONTROL	SECTION	JOB	
SY	0014	16	255, ETC.	
CHECK				
MNM				

SUMMARY OF DRAINAGE STRUCTURES

ITEM NO.		432	465	465	465	465	465	465	465	465	465	465	465	465	465	465	465	467	467	467	467	467	467	467	467	467	479	DIMENSIONS		
DESCRIPTIVE CODE		2002	2005	2077	2081	2084	2089	2092	2032	2035	2036	2038	2039	2291	2292	2030	2737	2152	2155	2177	2234	2236	2240	2290	2292	2297	2001			
ITEM DESCRIPTION		RIPRAP (CONC) (5 IN) (CY)	MANH (COMPL) (TY M) (EA)	INLET (COMPL) (DROP) (TY 1) (EA)	INLET (COMPL) (GRATE) (TY 1) (EA)	INLET (COMPL) (GRATE) (TY2-C) (EA)	MANH (COMPL) (JUNCT BOX) (TY 1) (EA)	MANH (COMPL) (TY 1) (EA)	INLET (COMPL) (CURB) (TY 1) (10'X3')	INLET (COMPL) (CURB) (TY 1) (15'X3')	INLET (COMPL) (CURB) (TY 1) (15'X4')	INLET (COMPL) (CURB) (TY 1) (20'X3')	INLET (COMPL) (CURB) (TY 1) (20'X4')	INLET (COMPL) CI(1)-02 FW (10' X 4') (EA)	INLET (COMPL) CI(1)-02 FW (5' X 3') (EA)	INLET (COMPL) CI(1)-02 FW (5' X 4') (EA)	INLET (COMPL) (TY H WITH LID (EA)	SET (TY I) (S=3FT) (HW=4FT) (6:1) (C) (EA)	SET (TY I) (S=4FT) (HW=4FT) (6:1) (C) (EA)	SET (TY I) (S=4FT) (HW=3FT) (6:1) (P) (EA)	SET (TY II) (18 IN) (RCP) (6:1) (C) (EA)	SET (TY II) (24 IN) (RCP) (6:1) (C) (EA)	SET (TY II) (36 IN) (RCP) (6:1) (C) (EA)	SET (TY II) (30 IN) (RCP) (6:1) (P) (EA)	SET (TY II) (36 IN) (RCP) (6:1) (P) (EA)	SET (TY II) (66 IN) (RCP) (6:1) (P) (EA)	ADJ MANHOLE			
LOCATION																														
SHEET	STRUCTURE ID																											L	W	D
3	BFA16	1		1																								5.00	4.00	4.97
3	BFA13					1																						4.00	4.00	25.37
3	MHM-BFA13		1																									3.00	3.00	18.40
3	BFA34													1														10.00	4.00	6.24
3	BFC10A				1																							4.00	4.00	26.96
3	MHM-BFC10A		1																									3.00	3.00	17.70
3	BFC6							1																				4.00	4.00	7.94
3	BFC5A							1																				4.00	4.00	10.13
3	BFC8					1																						4.00	4.00	18.21
3	MHM-BFC8		1																									3.00	3.00	11.20
3	BFC4				1																							4.00	4.00	10.02
3	MHM-BFC4		1																									3.00	3.00	3.00
4	BFC18	1		1																								5.00	4.00	2.50
4	BFC14					1																						4.00	4.00	13.02
4	MHM-BFC14		1																									3.00	3.00	6.02
4	BFC12					1																						4.00	4.00	8.25
5	BFD24A				1																							4.00	4.00	3.50
5	BFD20A	1		1																								5.00	4.00	4.18
5	BFD17					1																						4.00	4.00	6.78
5	BFD15A	1		1																								5.00	4.00	3.50
5	BFD38							1																				4.00	4.00	7.48
5	BFD39	1		1																								5.00	4.00	5.13
5	BFD10A					1																						4.00	4.00	14.45
5	MHM-BFD10A		1																									3.00	3.00	7.45
5	BFD5					1																						4.00	4.00	9.55
5	MHM-BFD5		1																									3.00	3.00	2.55
5	BFD8				1																							4.00	4.00	7.03
5	BFD1				1																							9.75	2.50	6.60
6	BFD33	2																				1						13.00	3.00	2.00
6	BFD31	1		1																								5.00	4.00	21.75
6	MHM-BFD31		1																									3.00	3.00	14.74
6	BFD27					1																						4.00	4.00	18.78
6	MHM-BFD27		1																									3.00	3.00	11.78
6	BFD6					1																						4.00	4.00	26.16
6	MHM-BFD6		1																									3.00	3.00	19.16
6	BFE10	1		1																								5.00	4.00	8.48
6	BFF1									1																		15.00	3.00	4.00
6	BFD34					1																						4.00	4.00	28.33
6	MHM-BFD34		1																									3.00	3.00	27.70
6	BFE9					1																						4.00	4.00	27.15
6	MHM-BFE9		1																									3.00	3.00	20.14
7	02G27	1		1																								5.00	4.00	3.42
7	02G30	1		1																								5.00	4.00	3.42
7	02G32																						1					16.25	3.50	2.50
7	02G19	1		1																								5.00	4.00	3.50
7	02G18	1		1																								5.00	4.00	3.58
7	02G25	1		1																								5.00	4.00	3.50
7	02G31																								1			16.25	3.50	2.50
7	02G14	1		1																								5.00	4.00	3.50
7	02G8	1		1																								5.00	4.00	3.50
SHEET TOTAL		16	12	14	5	11	0	3	0	1	0	0	0	1	0	0	0	0	0	0	0	1	1	0	1	0	0			

I. S. ENGINEERS, LLC

TBPE REG. # F-11657

Texas Department of Transportation

© 2012

IH 35W FROM NORTH TARRANT PKWY TO IH 820

SUMMARY OF DRAINAGE QUANTITIES

DRAINAGE STRUCTURES

SHEET 14 OF 18

DESIGN	FED.RD. DIV.NO.	FEDERAL AID PROJECT NO.		HIGHWAY NO.
BV	6	(SEE TITLE SHEET)		IH 35W
GRAPHICS ZS	STATE	DISTRICT	COUNTY	SHEET NO.
CHECK SY	TEXAS	FTW	TARRANT	122
CHECK MNM	CONTROL	SECTION	JOB	
	0014	16	255, ETC.	

FILENAME: S3BDRNSUM_14.dgn

DRAWING DATE: 8/27/2012

SUMMARY OF DRAINAGE STRUCTURES

ITEM NO.		432	465	465	465	465	465	465	465	465	465	465	465	465	465	465	465	467	467	467	467	467	467	467	467	467	479	DIMENSIONS		
DESCRIPTIVE CODE		2002	2005	2077	2081	2084	2089	2092	2032	2035	2036	2038	2039	2291	2292	2030	2737	2152	2155	2177	2234	2236	2240	2290	2292	2297	2001			
ITEM DESCRIPTION		RIPRAP (CONC) (5 IN) (CY)	MANH (COMPL) (TY M) (EA)	INLET (COMPL) (DROP) (TY 1) (EA)	INLET (COMPL) (GRATE) (TY 1) (EA)	INLET (COMPL) (GRATE) (TY2-C) (EA)	MANH (COMPL) (JUNCT BOX) (TY 1) (EA)	MANH (COMPL) (TY 1) (EA)	INLET (COMPL) (CURB) (TY 1) (10'X3')	INLET (COMPL) (CURB) (TY 1) (15'X3')	INLET (COMPL) (CURB) (TY 1) (15'X4')	INLET (COMPL) (CURB) (TY 1) (20'X3')	INLET (COMPL) (CURB) (TY 1) (20'X4')	INLET (COMPL) CI(1)-02 FW (10' X 4') (EA)	INLET (COMPL) CI(1)-02 FW (5' X 3') (EA)	INLET (COMPL) CI(1)-02 FW (5' X 4') (EA)	INLET (COMPL) (TY H WITH LID (EA)	SET (TY I) (S=3FT) (HW=4FT) (6:1) (C) (EA)	SET (TY I) (S=4FT) (HW=4FT) (6:1) (C) (EA)	SET (TY I) (S=4FT) (HW=3FT) (6:1) (P) (EA)	SET (TY II) (18 IN) (RCP) (6:1) (C) (EA)	SET (TY II) (24 IN) (RCP) (6:1) (C) (EA)	SET (TY II) (36 IN) (RCP) (6:1) (C) (EA)	SET (TY II) (30 IN) (RCP) (6:1) (P) (EA)	SET (TY II) (36 IN) (RCP) (6:1) (P) (EA)	SET (TY II) (66 IN) (RCP) (6:1) (P) (EA)	ADJ MANHOLE			
LOCATION																														
SHEET	STRUCTURE ID																											L	W	D
7	02G24																						1					16.25	3.50	2.50
8	02G22	1		1																								5.00	4.00	3.50
8	02G23	169																				1						13.00	3.00	2.00
8	02A25																		1									23.00	4.00	4.00
8	02A37																		1									23.00	4.00	4.00
8	02A20																					1						13.00	3.00	2.00
8	02A28																					1						13.00	3.00	2.00
9	BFG1				1																							4.33	4.66	4.00
9	BFG2				1																							4.33	4.66	4.00
9	BFG3				1																							4.33	4.66	4.00
9	BFG4				1																							4.33	4.66	4.00
9	BFJ1				1																							4.33	4.66	4.00
9	BFJ2				1																							4.33	4.66	3.50
9	03B2				1																							4.33	4.66	4.00
9	MHM-03B2		1																									3.00	3.00	3.00
9	03B3				1																							4.33	4.66	4.00
9	MHM-03B3		1																									3.00	3.00	3.00
9	03B4				1																							4.33	4.66	4.00
9	MHM-03B4		1																									3.00	3.00	3.00
9	03B5				1																							4.33	4.66	4.00
9	MHM-03B5		1																									3.00	3.00	3.00
10	03C2			1																								5.00	4.00	4.00
10	03D2			1																								5.00	4.00	4.00
10	03E2				1																							5.00	4.00	4.00
10	MHM-03E2		1																									3.00	3.00	3.00
10	03E3				1																							4.33	4.66	4.00
10	MHM-03E3		1																									3.00	3.00	3.00
10	03H2				1																							4.33	4.66	4.00
10	MHM-03H2		1																									3.00	3.00	3.00
10	03H3				1																							4.33	4.66	4.00
10	MHM-03H3		1																									3.00	3.00	3.00
10	03F3			1																								5.00	4.00	4.50
10	03F5									1																		15.00	3.00	4.50
10	03F6											1																20.00	3.00	4.00
10	03F7								1																			10.00	3.00	4.50
11	03I1			1																								5.00	4.00	4.00
11	03I2			1																								5.00	4.00	4.00
11	03I3			1																								5.00	4.00	4.50
11	03I4			1																								5.00	4.00	4.30
11	03J1			1																								5.00	4.00	4.00
11	03J2			1																								5.00	4.00	5.50
11	03J3			1																								5.00	4.00	4.00
11	03J4			1																								5.00	4.00	4.00
11	03J5			1																								5.00	4.00	4.00
11	03K1				1																							4.33	4.66	4.00
11	04H15			1																								5.00	4.00	5.32
11	03L4			1																								5.00	4.00	6.00
SHEET TOTAL		170	8	15	15	0	0	0	1	1	0	1	0	0	0	0	0	0	2	0	0	3	1	0	0	0	0			

FILENAME: S3BDRNSUM_15.dgn

DRAWING DATE: 8/27/2012

I. S. ENGINEERS, LLC

TBPE REG. # F-11657

Texas Department of Transportation

© 2012

IH 35W FROM NORTH TARRANT PKWY TO IH 820

SUMMARY OF DRAINAGE QUANTITIES

DRAINAGE STRUCTURES

SHEET 15 OF 18

DESIGN	FED.RD. DIV.NO.	FEDERAL AID PROJECT NO.		HIGHWAY NO.
BV	6	(SEE TITLE SHEET)		IH 35W
GRAPHICS ZS	STATE	DISTRICT	COUNTY	SHEET NO.
CHECK SY	TEXAS	FTW	TARRANT	123
CHECK MNM	CONTROL	SECTION	JOB	
	0014	16	255, ETC.	

SUMMARY OF DRAINAGE STRUCTURES

ITEM NO.		432	465	465	465	465	465	465	465	465	465	465	465	465	465	465	465	467	467	467	467	467	467	467	467	467	479	DIMENSIONS		
DESCRIPTIVE CODE		2002	2005	2077	2081	2084	2089	2092	2032	2035	2036	2038	2039	2291	2292	2030	2737	2152	2155	2177	2234	2236	2240	2290	2292	2297	2001			
ITEM DESCRIPTION		RIPRAP (CONC) (5 IN) (CY)	MANH (COMPL) (TY M) (EA)	INLET (COMPL) (DROP) (TY 1) (EA)	INLET (COMPL) (GRATE) (TY 1) (EA)	INLET (COMPL) (GRATE) (TY2-C) (EA)	MANH (COMPL) (JUNCT BOX) (TY 1) (EA)	MANH (COMPL) (TY 1) (EA)	INLET (COMPL) (CURB) (TY 1) (10'X3')	INLET (COMPL) (CURB) (TY 1) (15'X3')	INLET (COMPL) (CURB) (TY 1) (15'X4')	INLET (COMPL) (CURB) (TY 1) (20'X3')	INLET (COMPL) (CURB) (TY 1) (20'X4')	INLET (COMPL) CI(1)-02 FW (10' X 4') (EA)	INLET (COMPL) CI(1)-02 FW (5' X 3') (EA)	INLET (COMPL) CI(1)-02 FW (5' X 4') (EA)	INLET (COMPL) (TY H WITH LID (EA)	SET (TY I) (S=3FT) (HW=4FT) (6:1) (C) (EA)	SET (TY I) (S=4FT) (HW=4FT) (6:1) (C) (EA)	SET (TY I) (S=4FT) (HW=3FT) (6:1) (P) (EA)	SET (TY II) (18 IN) (RCP) (6:1) (C) (EA)	SET (TY II) (24 IN) (RCP) (6:1) (C) (EA)	SET (TY II) (36 IN) (RCP) (6:1) (C) (EA)	SET (TY II) (30 IN) (RCP) (6:1) (P) (EA)	SET (TY II) (36 IN) (RCP) (6:1) (P) (EA)	SET (TY II) (66 IN) (RCP) (6:1) (P) (EA)	ADJ MANHOLE			
LOCATION																														
SHEET	STRUCTURE ID																											L	W	D
12	04H6			1																								5.00	4.00	3.00
12	04J1			1																								5.00	4.00	4.00
12	04J2			1																								5.00	4.00	4.00
12	04J3			1																								5.00	4.00	4.00
12	04J4			1																								5.00	4.00	4.00
12	04J5			1																								5.00	4.00	4.00
12	04J6			1																								5.00	4.00	4.00
12	04J7			1																								5.00	4.00	4.00
12	FCB5											1																20.00	3.00	3.50
12	FCB6											1																20.00	3.00	3.50
	SHEET TOTAL	0	0	8	0	0	0	0	0	0	0	2	0	0	0	0	0	0	0	0	0	0	0	0	0	0	0			
CSJ: 0014-16-255	TOTALS	1778	32	100	54	56	1	35	34	17	4	6	4	8	9	2	2	1	6	2	2	6	2	3	2	1	2			

FILENAME: S3BDRNSUM_16.dgn

DRAWING DATE: 8/27/2012

I. S. ENGINEERS, LLC

TBPE REG. # F-11657

Texas Department of Transportation

© 2012

IH 35W FROM NORTH TARRANT PKWY TO IH 820

SUMMARY OF DRAINAGE QUANTITIES

DRAINAGE STRUCTURES

SHEET 16 OF 18

DESIGN	FED.RD. DIV.NO.	FEDERAL AID PROJECT NO.		HIGHWAY NO.
BV	6	(SEE TITLE SHEET)		IH 35W
GRAPHICS	STATE	DISTRICT	COUNTY	SHEET NO.
ZS	TEXAS	FTW	TARRANT	124
CHECK	CONTROL	SECTION	JOB	
SY	0014	16	255, ETC.	
CHECK				
MNM				

SUMMARY OF CONCRETE BOX CULVERTS (BRIDGE-CLASS)

CULVERT LOCATION					CULVERT DESCRIPTION	110 2002 EXCAVATION (CHANNEL)	169 2006 SOIL RETENTION BLANKETS (CL 2) (TY F)	400 2002 STRUCT EXCAV (BOX) *	402 2001 TRENCH EXCAVATION PROTECTION	432 2002 RIPRAP (CONC) (5 IN)	432 2023 RIPRAP (STONE PROTECTION) (24 IN)	462 2016 CONC BOX CULV (7 FT X 5 FT)	462 2020 CONC BOX CULV (8 FT X 5 FT)	466 2330 WINGWALL (PW-1) (HW = 7 FT)	466 2331 WINGWALL (PW-1) (HW = 8 FT)
SHEET NO.	RDWY.	BEG. BRIDGE	CL STATION	END BRIDGE	NO. BBLS - DIA/SPAN X HT - SKEW	CY	SY	CY	LF	CY	CY	LF	LF	EA	EA
CSJ: 0081-12-045															
1149	IH 35W ML	1429+60.92	1429+73.25	1429+85.59	3 - 7' x 5' x 276.99' - NO SKEW	338	1,164	905	162	42	142	831		1	1
					CSJ: 0081-12-045 TOTAL	**338**	**1,164**	**905**	**162**	**42**	**142**	**831**		**1**	**1**
CSJ: 0014-16-255															
1150	DC35N-287W	77+75.81	78+17.34	78+58.87	7-8' x 5' RCB - 36.23° SKEW	121	193	1,139	60		245		1,955	2	
1151-1152	IH 35W ML	1463+17.24	1463+75.67	1464+34.10	7-8' x 5' RCB - 55.02° SKEW	736	5,856	2,875	359		690		4,242	2	
1153	SBFR	53+22.25	53+69.71	54+17.16	7-8' x 5' RCB - 43.95° SKEW	1,988	581				510		707		2
					CSJ: 0014-16-255 TOTAL	**2,845**	**6,630**	**4,014**	**419**		**1,445**		**6,904**	**4**	**2**
					PROJECT TOTAL	**3,183**	**7,794**	**4,919**	**581**	**42**	**1,587**	**831**	**6,904**	**5**	**3**

* FOR CONTRACTOR'S INFORMATION ONLY

DRAWING DATE: 7/13/2012 FILENAME: S3BD*DR*SUM*17.dgn

H & H RESOURCES
CIVIL ENGINEERS
TBPE REGISTRATION NO. F-3678

Texas Department of Transportation
© 2012

IH 35W FROM NORTH TARRANT PKWY TO IH 820

SUMMARY OF DRAINAGE QUANTITIES
BRIDGE-CLASS CULVERTS

SHEET 17 OF 18

DESIGN	FED. RD. DIV. NO.	FEDERAL AID PROJECT NO.		HIGHWAY NO.
JKB	6	(SEE TITLE SHEET)		IH 35W
GRAPHICS CA	STATE	DISTRICT	COUNTY	SHEET NO.
CHECK JKB	TEXAS	FTW	TARRANT	125
CHECK JT	CONTROL 0014	SECTION 16	JOB 255, ETC.	

SUMMARY OF PIPE AND BOX CULVERTS (NON-BRIDGE-CLASS)

CULVERT LOCATION			CULVERT DESCRIPTION	110 2002 EXCAVATION (CHANNEL)	400 2002 STRUCT EXCAV (BOX) *	400 2003 STRUCT EXCAV (PIPE) *	400 2005 CEM STABIL BKFL	402 2001 TRENCH EXCAVATION PROTECTION	403 2001 TEMPORARY SPL SHORING	430 2135 CL C CONC FOR EXT STRU (CULV) (2-6' X 3')	432 2002 RIPRAP (CONC) (5 IN)	432 2023 RIPRAP (STONE PROTECTION) (24 IN)	462 2015 CONC BOX CULV (7 FT X 4 FT)	464 2009 RC PIPE (CL III) (36 IN)	464 2011 RC PIPE (CL III) (48 IN)	464 2013 RC PIPE (CL III) (60 IN)	466 2227 HEADWALL (CH-PW-S) (DIA=60 IN) (SPL)	466 2329 WINGWALL (PW-1) (HW = 6 FT)	479 2001 ADJ MANHS	479 2006 ADJUST INLET (CAP)
SHEET	RDWY	CL STATION	NO. BBLS-DIA OR SPAN X HEIGHT - SKEW	CY	CY	CY	CY	LF	SF	LF	CY	CY	LF	LF	LF	LF	EA	EA	EA	EA
CSJ: 0081-12-045																				
			CSJ: 0081-12-045 TOTAL																	
CSJ: 0014-16-255																				
1154	IH 35W ML	1547+54.36	1-7' x 4' (20' MAX FILL)		10415		207		7186				319						1	1
1155-1156	IH 35W ML	1561+34.47	48" & 60" RCP	544		367		60			29			40	75	75	1			
1157	IH 35W ML	1602+26.16	2-6' X 3' - 29.82° SKEW (EXTENSION)							12		301						1		
			CSJ: 0014-16-255 TOTAL	**544**	**10415**	**367**	**207**	**60**	**7186**	**12**	**29**	**301**	**319**	**40**	**75**	**75**	**1**	**1**	**1**	**1**
			PROJECT TOTAL	**544**	**10415**	**367**	**207**	**60**	**7186**	**12**	**29**	**301**	**319**	**40**	**75**	**75**	**1**	**1**	**1**	**1**

* FOR CONTRACTOR'S INFORMATION ONLY

H & H RESOURCES
CIVIL ENGINEERS
TBPE REGISTRATION NO. F-3678

Texas Department of Transportation
© 2012

IH 35W FROM NORTH TARRANT PKWY TO IH 820

SUMMARY OF DRAINAGE QUANTITIES
NON-BRIDGE-CLASS CULVERTS

SHEET 18 OF 18

DESIGN	FED. RD. DIV. NO.	FEDERAL AID PROJECT NO.		HIGHWAY NO.
JKB	6	(SEE TITLE SHEET)		IH 35W
GRAPHICS CA	STATE	DISTRICT	COUNTY	SHEET NO.
CHECK JKB	TEXAS	FTW	TARRANT	126
CHECK JT	CONTROL 0014	SECTION 16	JOB 255, ETC.	

DRAWING DATE: 7/13/2012 FILENAME: S3BD*DR*SUM*18.dgn

SUMMARY OF EROSION CONTROL QUANTITIES

ITEM NO.	160	162	164	164	164	166	168	169	506	506	506	506	506	506	5049
DESCRIPTIVE CODE	2003	2002	2007	2029	2031	2002	2001	2003	2002	2009	2016	2019	2020	2034	2001
ITEM DESCRIPTION	FURNISHING AND PLACING TOPSOIL (4")	BLOCK SODDING	BROADCAST SEED (PERM) (URBAN) (CLAY)	CELL FBR MLCH SEED (TEMP) (WARM)	CELL FBR MLCH SEED (TEMP) (COOL)	FERTILIZER *	VEGETATIVE WATERING	SOIL RETENTION BLANKETS (CL 1) (TY C)	ROCK FILTER DAMS (INSTALL) (TY 2)	ROCK FILTER DAMS (REMOVE)	CONSTRUCTION EXITS (INSTALL) (TY 1)	CONSTRUCTION EXITS (REMOVE)	EXCAV (EROS & SEDM CONT, IN PLACE)	TEMPORARY SEDIMENT CONTROL FENCE	BIOGRD EROSION CONTROL LOGS (8" DIA)
	SY	SY	SY	SY	SY	TON	MG	SY	LF	LF	SY	SY	CY	LF	LF
CSJ: 0081-12-045															
SHEET 1 OF 23	4468	0	4468	2234	2234	0.28	156		0	0	222	222	0	0	0
SHEET 2 OF 23	25050	0	25050	12525	12525	1.55	877		60	60	222	222	4	200	65
SHEET 3 OF 23	26992	0	26992	13496	13496	1.67	945		120	120	222	222	30	1600	20
SHEET 4 OF 23	51713	0	51713	25857	25857	3.21	1810		170	170	222	222	31	1680	0
SHEET 5 OF 23	8596	0	8596	4298	4298	0.53	301		70	70	111	111	16	872	0
CSJ: 0081-12-045 TOTAL	116819	0	116819	58410	58410	7.24	4089		420	420	999	999	81	4352	85
CSJ: 0014-16-255															
SHEET 5 OF 23	32788	0	32788	16394	16394	2.03	1148	14828	70	70	111	111	16	872	0
SHEET 6 OF 23	7819	286	7819	3910	3910	0.48	274		80	80	111	111	16	854	35
SHEET 7 OF 23	54258	0	54258	27129	27129	3.36	1899	26657	90	90	0	0	27	1470	160
SHEET 8 OF 23	40557	402	40557	20279	20279	2.51	1419		170	170	0	0	22	1190	225
SHEET 9 OF 23	53415	511	53415	26708	26708	3.31	1870		160	160	0	0	37	2020	235
SHEET 10 OF 23	38318	725	38318	19159	19159	2.38	1341		190	190	222	222	33	1780	0
SHEET 11 OF 23	56577	627	56577	28289	28289	3.51	1980		90	90	0	0	35	1910	370
SHEET 12 OF 23	47576	260	47576	23788	23788	2.95	1665		110	110	0	0	42	2245	265
SHEET 13 OF 23	28397	101	28397	14199	14199	1.76	994		30	30	0	0	27	1440	545
SHEET 14 OF 23	16364	275	16364	8182	8182	1.01	573		30	30	0	0	35	1910	905
SHEET 15 OF 23	15306	771	15306	7653	7653	0.95	536		0	0	222	222	38	2040	900
SHEET 16 OF 23	18732	342	18732	9366	9366	1.16	656		30	30	0	0	58	3110	240
SHEET 17 OF 23	22168	407	22168	11084	11084	1.37	776		30	30	0	0	61	3270	135
SHEET 18 OF 23	21524	370	21524	10762	10762	1.33	753		30	30	0	0	34	1840	120
SHEET 19 OF 23	18246	469	18246	9123	9123	1.13	639		0	0	0	0	18	990	130
SHEET 20 OF 23	8404	0	8404	4202	4202	0.52	294		80	80	222	222	18	960	0
SHEET 21 OF 23	0	0	0	0	0	0.00	0		0	0	222	222	14	750	0
SHEET 22 OF 23	6655	0	6655	3328	3328	0.41	233		0	0	0	0	19	1000	0
SHEET 23 OF 23	0	358	0	0	0	0.00	0		70	70	0	0	20	1077	55
CSJ: 0014-16-255 TOTAL	487104	5904	487104	243555	243555	30.17	17049	41485	1260	1260	1110	1110	570	30728	4320
PROJECT TOTAL	603923	5904	603923	301965	301965	37.41	21137	41485	1680	1680	2109	2109	651	35080	4405

* FOR CONTRACTOR'S INFORMATION ONLY

I. S. ENGINEERS, LLC

TBPE REG. # F-11657

Texas Department of Transportation

© 2012

IH 35W FROM NORTH TARRANT PKWY TO IH 820

QUANTITY SUMMARY
EROSION CONTROL

SHEET 1 OF 1

DESIGN	FED.RD. DIV.NO.	FEDERAL AID PROJECT NO.		HIGHWAY NO.
BV	6	(SEE TITLE SHEET)		IH 35W
GRAPHICS ZS	STATE	DISTRICT	COUNTY	SHEET NO.
CHECK SY	TEXAS	FTW	TARRANT	127
CHECK MNM	CONTROL	SECTION	JOB	
	0014	16	255, ETC.	

FILENAME: S3BSWPSUM_01.dgn

DRAWING DATE: 7/29/2012

SUMMARY OF BRIDGE QUANTITIES

LOCATION		104 2009 REMOVING CONC (RIPRAP)	403 2001 TEMPORARY SPL SHORING	416 2001 DRILL SHAFT (18 IN)	416 2004 DRILL SHAFT (36 IN)	416 2005 DRILL SHAFT (42 IN)	416 2006 DRILL SHAFT (48 IN)	420 2018 CL C CONC (FOOTING) (MASS PLACEMENT)
		SY	SF	LF	LF	LF	LF	CY
CSJ: 0081-12-045								
CSJ: 0081-12-045 TOTAL	**CSJ: 0081-12-045 TOTAL**		**0**	**0**	**0**	**0**	**0**	**0.0**
CSJ: 0014-16-255								
NB IH 35W TO WB US 287			2146		620			153.7
NB IH 35W ML TO WB US 287			4466		514	144	136	343.1
EB US 287 TO SB IH 35W ML			3886		646		136	296.5
BASSWOOD BLVD SN TURNAROUND			483	66	444			
BASSWOOD BLVD NS TURNAROUND			480	71	470			
NB IH35W EXIT RAMP FROM ML			5760		681		400	578.0
SB IH35W ENTRANCE RAMP TO ML			4608		459		260	462.4
RAMP D (35N-BB) OVER RAMP C (WCB-35N)								
RAMP A (BB-35S) OVER RAMP B (35S-WCB)								
SB IH35W ENTR RAMP TO GP OVER BFC					354			
NB IH35W EXIT RAMP FROM GP OVER BFC					408			
NB FRONTAGE RD OVER BIG FOSSIL CK		533			305			
SB FRONTAGE RD OVER BIG FOSSIL CK		584			413			
NB IH 35W OVER BIG FOSSIL CK		151			979			
SB IH 35W OVER BIG FOSSIL CK		151			316			
IH 35W OVER WESTERN CENTER BLVD		1297			2018			
CSJ: 0014-16-255 TOTAL	**CSJ: 0014-16-255 TOTAL**	**2,716**	**21,829**	**137**	**8,627**	**144**	**932**	**1,833.7**
PROJECT TOTAL		**2,716**	**21,829**	**137**	**8,627**	**144**	**932**	**1,833.7**

NOTES:

1. FOR BRIDGE APPROACHES CONTRACTOR SHALL USE "BAT-CTFB-08(FW)" STANDARD. QUANTITIES FOR APPROACHES ARE PROVIDED IN THE ROADWAY SUMMARY SHEETS USING BID ITEMS 247 2060, 275 2001 AND 275 2018.

SUMMARY OF BRIDGE QUANTITIES

LOCATION		420 2041 CL C CONC (ABUT) (HPC)	420 2042 CL C CONC (BENT) (HPC)	420 2092 CL C CONC (CAP) (MASS PLACEMENT) (HPC)	420 2093 CL C CONC (COLUMN) (MASS PLACE) (HPC)	420 2223 CL C CONC (COLUMN) (HPC)	420 2256 CL S CONC (APPR SLAB) (HPC)
		CY	CY	CY	CY	CY	CY
CSJ: 0081-12-045							
CSJ: 0081-12-045 TOTAL	**CSJ: 0081-12-045 TOTAL**	**0.0**	**0.0**	**0.0**	**0.0**	**0.0**	**0**
CSJ: 0014-16-255							
NB IH 35W TO WB US 287		50.9	134.7				58
NB IH 35W ML TO WB US 287		36.4	168.9		20.1		42
EB US 287 TO SB IH 35W ML		46.6	125.2		14.2		58
BASSWOOD BLVD SN TURNAROUND		58.0	74.8				64
BASSWOOD BLVD NS TURNAROUND		58.0	79.6				64
NB IH35W EXIT RAMP FROM ML		25.8	230.3	106.8	234.6		41
SB IH35W ENTRANCE RAMP TO ML		27.5	184.8	71.2	179.2		44
RAMP D (35N-BB) OVER RAMP C (WCB-35N)							19
RAMP A (BB-35S) OVER RAMP B (35S-WCB)							19
SB IH35W ENTR RAMP TO GP OVER BFC		32.0	61.7				49
NB IH35W EXIT RAMP FROM GP OVER BFC		28.1	75.8				47
NB FRONTAGE RD OVER BIG FOSSIL CK		61.1	74.9				101
SB FRONTAGE RD OVER BIG FOSSIL CK		60.7	80.6				124
NB IH 35W OVER BIG FOSSIL CK			160.8				
SB IH 35W OVER BIG FOSSIL CK			45.3				
IH 35W OVER WESTERN CENTER BLVD			128.1			113.4	
CSJ: 0014-16-255 TOTAL	**CSJ: 0014-16-255 TOTAL**	**485.1**	**1,625.5**	**178.0**	**448.1**	**113.4**	**730**
PROJECT TOTAL		**485.1**	**1,625.5**	**178.0**	**448.1**	**113.4**	**730**

PESC P.E. Structural Consultants, Inc.
www.PEStructural.com
TBPE Firm No. F-1475

Texas Department of Transportation
© 2012

IH 35W FROM NORTH TARRANT PKWY TO IH 820

QUANTITY SUMMARY

BRIDGES

SHEET 1 OF 5

DESIGN	FED. RD. DIV. NO.	FEDERAL AID PROJECT NO.		HIGHWAY NO.
GRAPHICS TLS	6	(SEE TITLE SHEET)		IH 35W
CHECK NRR	STATE TEXAS	DISTRICT FTW	COUNTY TARRANT	SHEET NO. 128
CHECK AB	CONTROL 0014	SECTION 16	JOB 255, ETC.	

FILENAME: S3B*Bridge*Qty*Summary-01.DGN
DRAWING DATE: 7/13/2012

SUMMARY OF BRIDGE QUANTITIES

LOCATION		420 2269 CL C CONC (CAP) (HPC)	420 CL F CONC (BENT) (HPC) (MASS PLACEMENT)	420 2278 CL F CONC (CAP) (MASS PLACEMENT) (HPC)	420 2292 CL S CONC (BRIDGE SDWLK) (HPC)	422 2003 REINF CONC SLAB (HPC) (CL S)	422 2008 REINF CONC SLAB (EXT SLAB) (HPC) (CL S)	425 2066 PRESTR CONC GIRDER (TX40)	425 2067 PRESTR CONC GIRDER (TX46)
		CY	CY	CY	CY	SF	SF	LF	LF
CSJ: 0081-12-045									
CSJ: 0081-12-045 TOTAL	**CSJ: 0081-12-045 TOTAL**		**0.0**	**0.0**	**0.0**	**0**	**0**	**0.00**	**0.00**
CSJ: 0014-16-255									
NB IH 35W TO WB US 287			48.8			27,387			
NB IH 35W ML TO WB US 287		20.1	281.1			34,236			
EB US 287 TO SB IH 35W ML		36.1	375.7			29,216			
BASSWOOD BLVD SN TURNAROUND					71.1	12,864			
BASSWOOD BLVD NS TURNAROUND					71.1	12,864			
NB IH35W EXIT RAMP FROM ML				187.3		38,904			
SB IH35W ENTRANCE RAMP TO ML				269.2		29,740			
RAMP D (35N-BB) OVER RAMP C (WCB-35N)									
RAMP A (BB-35S) OVER RAMP B (35S-WCB)									
SB IH35W ENTR RAMP TO GP OVER BFC						6,122		868.55	
NB IH35W EXIT RAMP FROM GP OVER BFC						6,913		981.98	
NB FRONTAGE RD OVER BIG FOSSIL CK					36.8	10,578		1456.03	
SB FRONTAGE RD OVER BIG FOSSIL CK					36.7	11,083		1468.22	
NB IH 35W OVER BIG FOSSIL CK							15,579		1784.20
SB IH 35W OVER BIG FOSSIL CK							9,823		1060.21
IH 35W OVER WESTERN CENTER BLVD							39,277		6027.00
CSJ: 0014-16-255 TOTAL	**CSJ: 0014-16-255 TOTAL**	**56.2**	**705.6**	**456.5**	**215.7**	**219,907**	**64,679**	**4774.78**	**8871.41**
PROJECT TOTAL		**56.2**	**705.6**	**456.5**	**215.7**	**219,907**	**64,679**	**4774.78**	**8871.41**

SUMMARY OF BRIDGE QUANTITIES

LOCATION		425 2068 PRESTR CONC GIRDER (TX54)	426 2001 POST-TENSIONING (GROUTED)	428 2002 CONC SURF TREAT (CLASS II)	429 2007 CNC STR REP (HORIZONTAL)	429 2008 CNC STR REP (VERTICAL OR OVERHEAD)	429 2010 CNC STR REP (BRDG DECK) (FULL DEPTH)
		LF	MKF	SY	SF	SF	SF
CSJ: 0081-12-045							
CSJ: 0081-12-045 TOTAL	**CSJ: 0081-12-045 TOTAL**	**0.00**	**0**	**0**	**0**	**0**	**0**
CSJ: 0014-16-255							
NB IH 35W TO WB US 287		1150.99		3765			
NB IH 35W ML TO WB US 287		2447.80		4921			
EB US 287 TO SB IH 35W ML		3348.36		4458			
BASSWOOD BLVD SN TURNAROUND		2102.00		1801			
BASSWOOD BLVD NS TURNAROUND		2102.04		1801			
NB IH35W EXIT RAMP FROM ML		3261.55	285	4579			
SB IH35W ENTRANCE RAMP TO ML		2766.66	462	3690			
RAMP D (35N-BB) OVER RAMP C (WCB-35N)					20	20	24
RAMP A (BB-35S) OVER RAMP B (35S-WCB)					20	20	24
SB IH35W ENTR RAMP TO GP OVER BFC				773			
NB IH35W EXIT RAMP FROM GP OVER BFC				851			
NB FRONTAGE RD OVER BIG FOSSIL CK				1736			
SB FRONTAGE RD OVER BIG FOSSIL CK				1798			
NB IH 35W OVER BIG FOSSIL CK				2407	10	112	
SB IH 35W OVER BIG FOSSIL CK				1523	4	18	
IH 35W OVER WESTERN CENTER BLVD				4365	100	50	
CSJ: 0014-16-255 TOTAL	**CSJ: 0014-16-255 TOTAL**	**17179.40**	**747**	**38468**	**154**	**220**	**48**
PROJECT TOTAL		**17179.40**	**747**	**38468**	**154**	**220**	**48**

PESC
P.E. Structural Consultants, Inc.
www.PEStructural.com
TBPE Firm No. F-1475

Texas Department of Transportation
© 2012

IH 35W FROM NORTH TARRANT PKWY TO IH 820

QUANTITY SUMMARY

BRIDGES

SHEET 2 OF 5

DESIGN	FED. RD. DIV. NO.	FEDERAL AID PROJECT NO.		HIGHWAY NO.
GRAPHICS TLS	6	(SEE TITLE SHEET)		IH 35W
CHECK NRR	STATE TEXAS	DISTRICT FTW	COUNTY TARRANT	SHEET NO. 129
CHECK AB	CONTROL 0014	SECTION 16	JOB 255, ETC.	

FILENAME: S3B*Bridge*Qty*Summary-02.DGN
DRAWING DATE: 7/13/2012

SUMMARY OF BRIDGE QUANTITIES

LOCATION		430 2126 CL C CONC FOR EXT STR (ABUT) (HPC)	430 2232 CL S CONC FOR EXT STR (APPR SLAB) (HPC)	432 2001 RIPRAP (CONC) (4 IN)	432 2002 RIPRAP (CONC) (5 IN)	434 2040 ELASTOMERIC BEAR (E9)	434 2041 ELASTOMERIC BEAR (F9)	434 2049 ELASTOMERIC BEAR (EE5)	434 2050 ELASTOMERIC BEAR (EE6)
		CY	CY	CY	CY	EA	EA	EA	EA
CSJ: 0081-12-045									
CSJ: 0081-12-045 TOTAL	**CSJ: 0081-12-045 TOTAL**	**0.0**	**0**	**0**	**0**	**0**	**0**	**0**	**0**
CSJ: 0014-16-255									
NB IH 35W TO WB US 287				46					
NB IH 35W ML TO WB US 287				58				1	8
EB US 287 TO SB IH 35W ML				79					3
BASSWOOD BLVD SN TURNAROUND				159					
BASSWOOD BLVD NS TURNAROUND				160					
NB IH35W EXIT RAMP FROM ML				42		4	4		
SB IH35W ENTRANCE RAMP TO ML				33			4		
RAMP D (35N-BB) OVER RAMP C (WCB-35N)									
RAMP A (BB-35S) OVER RAMP B (35S-WCB)									
SB IH35W ENTR RAMP TO GP OVER BFC					50				
NB IH35W EXIT RAMP FROM GP OVER BFC					42				
NB FRONTAGE RD OVER BIG FOSSIL CK					74				
SB FRONTAGE RD OVER BIG FOSSIL CK					81				
NB IH 35W OVER BIG FOSSIL CK		87.8	202		21				
SB IH 35W OVER BIG FOSSIL CK		32.0	60		21				
IH 35W OVER WESTERN CENTER BLVD		126.1	258	334					
CSJ: 0014-16-255 TOTAL	**CSJ: 0014-16-255 TOTAL**	**245.9**	**520**	**911**	**289**	**4**	**8**	**1**	**11**
PROJECT TOTAL		**245.9**	**520**	**911**	**289**	**4**	**8**	**1**	**11**

SUMMARY OF BRIDGE QUANTITIES

LOCATION		434 2053 ELASTOMERIC BEAR (EE9)	434 2057 ELASTOMERIC BEAR (EF5)	434 2058 ELASTOMERIC BEAR (EF6)	434 2061 ELASTOMERIC BEAR (EF9)	434 2066 ELASTOMERIC BEAR (E5)
		EA	EA	EA	EA	EA
CSJ: 0081-12-045						
CSJ: 0081-12-045 TOTAL	**CSJ: 0081-12-045 TOTAL**	**0**	**0**	**0**	**0**	**0**
CSJ: 0014-16-255						
NB IH 35W TO WB US 287						5
NB IH 35W ML TO WB US 287			1			
EB US 287 TO SB IH 35W ML		1		3	1	
BASSWOOD BLVD SN TURNAROUND						
BASSWOOD BLVD NS TURNAROUND						
NB IH35W EXIT RAMP FROM ML						
SB IH35W ENTRANCE RAMP TO ML						
RAMP D (35N-BB) OVER RAMP C (WCB-35N)						
RAMP A (BB-35S) OVER RAMP B (35S-WCB)						
SB IH35W ENTR RAMP TO GP OVER BFC						
NB IH35W EXIT RAMP FROM GP OVER BFC						
NB FRONTAGE RD OVER BIG FOSSIL CK						
SB FRONTAGE RD OVER BIG FOSSIL CK						
NB IH 35W OVER BIG FOSSIL CK						
SB IH 35W OVER BIG FOSSIL CK						
IH 35W OVER WESTERN CENTER BLVD						
CSJ: 0014-16-255 TOTAL	**CSJ: 0014-16-255 TOTAL**	**1**	**1**	**3**	**1**	**5**
PROJECT TOTAL		**1**	**1**	**3**	**1**	**5**

PESC
P.E. Structural Consultants, Inc.
www.PEStructural.com
TBPE Firm No. F-1475

Texas Department of Transportation
© 2012

IH 35W FROM NORTH TARRANT PKWY TO IH 820

QUANTITY SUMMARY

BRIDGES

SHEET 3 OF 5

DESIGN	FED. RD. DIV. NO.	FEDERAL AID PROJECT NO.		HIGHWAY NO.
GRAPHICS TLS	6	(SEE TITLE SHEET)		IH 35W
CHECK NRR	STATE TEXAS	DISTRICT FTW	COUNTY TARRANT	SHEET NO. 130
CHECK AB	CONTROL 0014	SECTION 16	JOB 255, ETC.	

DRAWING DATE: 7/13/2012 FILENAME: S3B*Bridge*Qty*Summary-03.DGN

SUMMARY OF BRIDGE QUANTITIES

LOCATION		434 2071 ELASTOMERIC BEAR (F5)	434 2073 ELASTOMERIC BEAR (F8)	434 2077 SLIDING ELASTOMERIC BEAR (ES4)	434 2087 ELASTOMERIC BEAR (EE4)	434 2088 ELASTOMERIC BEAR (EF4)	434 2118 ELASTOMERIC BEAR (ES5)	438 2002 CLEAN AND SEAL EXIST JOINTS	438 2006 CLEAN AND SEAL CRACKS
		EA	EA	EA	EA	EA	EA	LF	LF
CSJ: 0081-12-045									
CSJ: 0081-12-045 TOTAL	**CSJ: 0081-12-045 TOTAL**	**0**	**0**	**0**	**0**	**0**	**0**	**0**	**0**
CSJ: 0014-16-255									
NB IH 35W TO WB US 287		5		10					
NB IH 35W ML TO WB US 287			4		3	3			
EB US 287 TO SB IH 35W ML									
BASSWOOD BLVD SN TURNAROUND									
BASSWOOD BLVD NS TURNAROUND									
NB IH35W EXIT RAMP FROM ML							8		
SB IH35W ENTRANCE RAMP TO ML							8		
RAMP D (35N-BB) OVER RAMP C (WCB-35N)								48	60
RAMP A (BB-35S) OVER RAMP B (35S-WCB)								48	60
SB IH35W ENTR RAMP TO GP OVER BFC									
NB IH35W EXIT RAMP FROM GP OVER BFC									
NB FRONTAGE RD OVER BIG FOSSIL CK									
SB FRONTAGE RD OVER BIG FOSSIL CK									
NB IH 35W OVER BIG FOSSIL CK								144	46
SB IH 35W OVER BIG FOSSIL CK								144	268
IH 35W OVER WESTERN CENTER BLVD								710	115
CSJ: 0014-16-255 TOTAL	**CSJ: 0014-16-255 TOTAL**	**5**	**4**	**10**	**3**	**3**	**16**	**1,094**	**549**
PROJECT TOTAL		**5**	**4**	**10**	**3**	**3**	**16**	**1,094**	**549**

SUMMARY OF BRIDGE QUANTITIES

LOCATION		442 2002 STR STL (PLATE GIRDER)	442 2047 STRUCTURAL STEEL (MISCELLANEOUS BRIDGE)	442 2048 STRUCTURAL STEEL (MISC NON - BRIDGE)	450 2102 RAIL (TYPE SSTR) (HPC)	450 2612 RAIL (TY C221) (HPC)	450 2635 RAIL TY C402 (MOD) (HPC)
		LB	LB	LB	LF	LF	LF
CSJ: 0081-12-045							
CSJ: 0081-12-045 TOTAL	**CSJ: 0081-12-045 TOTAL**	**0**	**0**	**0**	**0.0**	**0.0**	**0.0**
CSJ: 0014-16-255							
NB IH 35W TO WB US 287		915,500		888	1477.4		
NB IH 35W ML TO WB US 287		1,228,300		666	2469.3		
EB US 287 TO SB IH 35W ML		506,900		209	1861.5		
BASSWOOD BLVD SN TURNAROUND			233	418		25.1	438.0
BASSWOOD BLVD NS TURNAROUND			233	418		25.1	438.0
NB IH35W EXIT RAMP FROM ML		850,613			2780.1		
SB IH35W ENTRANCE RAMP TO ML		523,556	431		2111.3		
RAMP D (35N-BB) OVER RAMP C (WCB-35N)							
RAMP A (BB-35S) OVER RAMP B (35S-WCB)							
SB IH35W ENTR RAMP TO GP OVER BFC					457.3		
NB IH35W EXIT RAMP FROM GP OVER BFC					503.8		
NB FRONTAGE RD OVER BIG FOSSIL CK				174			229.5
SB FRONTAGE RD OVER BIG FOSSIL CK				182			219.5
NB IH 35W OVER BIG FOSSIL CK					234.7		
SB IH 35W OVER BIG FOSSIL CK					237.1		
IH 35W OVER WESTERN CENTER BLVD					536.0		
CSJ: 0014-16-255 TOTAL	**CSJ: 0014-16-255 TOTAL**	**4,024,869**	**897**	**2955**	**12668.5**	**50.2**	**1325.0**
PROJECT TOTAL		**4,024,869**	**897**	**2955**	**12668.5**	**50.2**	**1325.0**

PESC P.E. Structural Consultants, Inc.
www.PEStructural.com
TBPE Firm No. F-1475

Texas Department of Transportation
© 2012

IH 35W FROM NORTH TARRANT PKWY TO IH 820

QUANTITY SUMMARY

BRIDGES

SHEET 4 OF 5

DESIGN	FED. RD. DIV. NO.	FEDERAL AID PROJECT NO.		HIGHWAY NO.
GRAPHICS TLS	6	(SEE TITLE SHEET)		IH 35W
CHECK NRR	STATE TEXAS	DISTRICT FTW	COUNTY TARRANT	SHEET NO. 131
CHECK AB	CONTROL 0014	SECTION 16	JOB 255, ETC.	

SUMMARY OF BRIDGE QUANTITIES

LOCATION		450 2636 RAIL (TY T401) (HPC)	454 2001 SEALED EXPANSION JOINT (4 IN) (SEJ-A)	454 2009 SEALED EXPANSION JOINT (5 IN) (SEJ-A)	471 2003 GRATE & FRAME	481 2012 PVC PIPE (SCH 40) (6 IN)	481 2013 PVC PIPE (SCH 40) (8 IN)	514 2065 PRM CON TRF BAR (SAFETY SH) (TY 1) (HPC)
		LF	LF	LF	EA	LF	LF	LF
CSJ: 0081-12-045								
CSJ: 0081-12-045 TOTAL	**CSJ: 0081-12-045 TOTAL**	**0.0**	**0**	**0**	**0**	**0**	**0**	**0**
CSJ: 0014-16-255								
NB IH 35W TO WB US 287			148					
NB IH 35W ML TO WB US 287			162					
EB US 287 TO SB IH 35W ML			182		3	150		
BASSWOOD BLVD SN TURNAROUND		412.0	78					
BASSWOOD BLVD NS TURNAROUND		412.0	78					
NB IH35W EXIT RAMP FROM ML			81	27	4		283	
SB IH35W ENTRANCE RAMP TO ML			111		1		5	
RAMP D (35N-BB) OVER RAMP C (WCB-35N)			24					
RAMP A (BB-35S) OVER RAMP B (35S-WCB)			24					
SB IH35W ENTR RAMP TO GP OVER BFC			55					
NB IH35W EXIT RAMP FROM GP OVER BFC			55					
NB FRONTAGE RD OVER BIG FOSSIL CK		229.4	102					
SB FRONTAGE RD OVER BIG FOSSIL CK		232.9	114					
NB IH 35W OVER BIG FOSSIL CK			152					213
SB IH 35W OVER BIG FOSSIL CK			91					216
IH 35W OVER WESTERN CENTER BLVD			294					
CSJ: 0014-16-255 TOTAL	**CSJ: 0014-16-255 TOTAL**	**1286.3**	**1,751**	**27**	**8**	**150**	**288**	**429**
PROJECT TOTAL		**1286.3**	**1,751**	**27**	**8**	**150**	**288**	**429**

SUMMARY OF BRIDGE QUANTITIES

LOCATION		514 2066 PRM CON TRF BAR (SG SLP) (TY 1) (42") (HPC)	545 2001 CRASH CUSH ATTEN (INSTL)	636 2001 ALUMINUM SIGNS (TY A)	780 2001 EPOXY INJECTION (TY IX)
		LF	EA	SF	LF
CSJ: 0081-12-045					
CSJ: 0081-12-045 TOTAL	**CSJ: 0081-12-045 TOTAL**	**0**	**0**	**0**	**0**
CSJ: 0014-16-255					
NB IH 35W TO WB US 287				56	
NB IH 35W ML TO WB US 287				42	
EB US 287 TO SB IH 35W ML		168	1	14	
BASSWOOD BLVD SN TURNAROUND				28	
BASSWOOD BLVD NS TURNAROUND				28	
NB IH35W EXIT RAMP FROM ML					
SB IH35W ENTRANCE RAMP TO ML				28	
RAMP D (35N-BB) OVER RAMP C (WCB-35N)					
RAMP A (BB-35S) OVER RAMP B (35S-WCB)					302
SB IH35W ENTR RAMP TO GP OVER BFC					
NB IH35W EXIT RAMP FROM GP OVER BFC					
NB FRONTAGE RD OVER BIG FOSSIL CK					
SB FRONTAGE RD OVER BIG FOSSIL CK					
NB IH 35W OVER BIG FOSSIL CK			1		
SB IH 35W OVER BIG FOSSIL CK		213			
IH 35W OVER WESTERN CENTER BLVD		804	1	56	
CSJ: 0014-16-255 TOTAL	**CSJ: 0014-16-255 TOTAL**	**1,185**	**3**	**252**	**302**
PROJECT TOTAL		**1,185**	**3**	**252**	**302**

PESC
P.E. Structural Consultants, Inc.
www.PEStructural.com
TBPE Firm No. F-1475

Texas Department of Transportation
© 2012

IH 35W FROM NORTH TARRANT PKWY TO IH 820

QUANTITY SUMMARY

BRIDGES

SHEET 5 OF 5

DESIGN	FED. RD. DIV. NO.	FEDERAL AID PROJECT NO.		HIGHWAY NO.
GRAPHICS TLS	6	(SEE TITLE SHEET)		IH 35W
CHECK NRR	STATE TEXAS	DISTRICT FTW	COUNTY TARRANT	SHEET NO. 132
CHECK AB	CONTROL 0014	SECTION 16	JOB 255, ETC.	

DRAWING DATE: 7/13/2012 FILENAME: S3B*Bridge*Qty*Summary-05.DGN

SUMMARY OF SIGN ASSEMBLIES

		416 2018	416 2019	416 2020	416 2021	416 2022	416 2023	432 2002	636 2001	636 2002	636 2003	644 2002
		DRILL SHAFT (SIGN MTS) (24 IN)	DRILL SHAFT (SIGN MTS) (30 IN)	DRILL SHAFT (SIGN MTS) (36 IN)	DRILL SHAFT (SIGN MTS) (42 IN)	DRILL SHAFT (SIGN MTS) (48 IN)	DRILL SHAFT (SIGN MTS) (54 IN)	RIPRAP (CONC) (5 IN)	ALUMINUM SIGNS (TY A)	ALUMINUM SIGNS (TY G)	ALUMINUM SIGNS (TY O)	IN SM RD SN SUP&AM TY10BWG(1)SA(P-BM)
		LF	LF	LF	LF	LF	LF	CY	SF	SF	SF	EA
CSJ: 0081-12-045												
SHEET 1 OF 22	BEGIN TO 1406+00		306		62			4	81		830	
SHEET 2 OF 22	1406+00 TO 1418+00			108				2	27		200	
SHEET 3 OF 22	1418+00 TO 1430+00						55	1			383	
SHEET 4 OF 22	1430+00 TO 1442+00	16						1		178		
SHEET 5 OF 22	1442+00 TO 1454+00 (NB)							0				
SHEET 22 OF 22	US 287 35S-287W											
	CSJ: 0081-12-045 TOTAL	**16**	**306**	**108**	**62**	**0**	**55**	**8**	**108**	**178**	**1,413**	**0**
CSJ: 0014-16-255												
SHEET 5 OF 22	1442+00 TO 1454+00 (NB)					23		1			166	
SHEET 6 OF 22	1442+00 TO 1454+00 (SB)	37						2	27	469		
SHEET 7 OF 22	1454+00 TO 1466+00 (NB)	22						2		167		
SHEET 8 OF 22	1454+00 TO 1466+00 (SB)						22	0			205	
SHEET 9 OF 22	1466+00 TO 1478+00	14					93	2	27	228	552	1
SHEET 10 OF 22	1478+00 TO 1490+00	19					33	1	27	228	250	
SHEET 11 OF 22	1490+00 TO 1502+00	9		146	24	22		4	27	80	539	2
SHEET 12 OF 22	1502+00 TO 1514+00						17	0			250	
SHEET 13 OF 22	1514+00 TO 1526+00				15		16	2			369	
SHEET 14 OF 22	1526+00 TO 1538+00						27	1			199	
SHEET 15 OF 22	1538+00 TO 1550+00	23			56	29		2		144	278	2
SHEET 16 OF 22	1550+00 TO 1562+00											1
SHEET 17 OF 22	1562+00 TO 1574+00		88				23	2	18		716	
SHEET 18 OF 22	1574+00 TO 1586+00	10	108					3	18	88	253	1
SHEET 19 OF 22	1586+00 TO 1598+00	13				66		1		101	282	
SHEET 20 OF 22	1598+00 TO END	21						1		208		
SHEET 21 OF 22	US 287 BEGIN TO 474+75	13			71			1	81	87	368	
SHEET 22 OF 22	US 287 474+75 TO 486+50		106					2	27		283	
	CSJ: 0014-16-255 TOTAL	**181**	**302**	**146**	**166**	**140**	**231**	**27**	**252**	**1,800**	**4,710**	**7**
	PROJECT TOTAL	**197**	**608**	**254**	**228**	**140**	**286**	**35**	**360**	**1,978**	**6,123**	**7**

FILENAME: S3BSUM00.dgn

DRAWING DATE: 7/31/2012

KENNEDY CONSULTING
TBPE REGISTRATION NO. F-926

Texas Department of Transportation
© 2012

IH 35W FROM NORTH TARRANT PKWY TO IH 820

QUANTITY SUMMARY

SIGN ASSEMBLIES

SHEET 1 OF 3

DESIGN	FED. RD. DIV. NO.	FEDERAL AID PROJECT NO.		HIGHWAY NO.
KCI	6	(SEE TITLE SHEET)		IH 35W
GRAPHICS	STATE	DISTRICT	COUNTY	SHEET NO.
KCI	TEXAS	FTW	TARRANT	133
CHECK	CONTROL	SECTION	JOB	
KCI	0014	16	255, ETC.	

SUMMARY OF SIGN ASSEMBLIES

		644 2004	644 2022	644 2025	644 2027	644 2028	644 2042	644 2081	644 2082	647 2001
		IN SM RD SN SUP&AM TY10BWG (1)SA(T)	IN SM RD SN SUP&AM TYS80 (1)SA(P)	IN SM RD SN SUP&AM TYS80 (1)SA(T)	IN SM RD SN SUP&AM TYS80 (1)SA(U)	IN SM RD SN SUP&AM TYS80 (1)SA(U-1EXT)	IN SM RD SN SUP&AM TYS80 (2)SA(P)	IN SM RD SN SUP&AM TYTWT (1)WS(P)	IN SM RD SN SUP&AM TYTWT (1)WS(T)	INSTALL LRSS (STRUCT STEEL)
		EA	EA	EA	EA	EA	EA	EA	EA	LB
CSJ: 0081-12-045										
SHEET 1 OF 22	BEGIN TO 1406+00			2				1		
SHEET 2 OF 22	1406+00 TO 1418+00	5		1			1	2	2	
SHEET 3 OF 22	1418+00 TO 1430+00	3		4			1	1		
SHEET 4 OF 22	1430+00 TO 1442+00	2		1			1	6		846
SHEET 5 OF 22	1442+00 TO 1454+00 (NB)	2				1				
SHEET 22 OF 22	US 287 35S-287W									
	CSJ: 0081-12-045 TOTAL	**12**	**0**	**8**	**0**	**1**	**3**	**10**	**2**	**846**
CSJ: 0014-16-255										
SHEET 5 OF 22	1442+00 TO 1454+00 (NB)			1						
SHEET 6 OF 22	1442+00 TO 1454+00 (SB)	3								2,256
SHEET 7 OF 22	1454+00 TO 1466+00 (NB)	4	1			1				937
SHEET 8 OF 22	1454+00 TO 1466+00 (SB)	1		1						
SHEET 9 OF 22	1466+00 TO 1478+00	4		2		1	2			1,156
SHEET 10 OF 22	1478+00 TO 1490+00	4		1				1	4	1,156
SHEET 11 OF 22	1490+00 TO 1502+00	4		2	1	2		9	16	386
SHEET 12 OF 22	1502+00 TO 1514+00	12		2				2	6	
SHEET 13 OF 22	1514+00 TO 1526+00	11					1	2	5	
SHEET 14 OF 22	1526+00 TO 1538+00	18			4		1	4	14	
SHEET 15 OF 22	1538+00 TO 1550+00	13	1		4	2	1	13	17	861
SHEET 16 OF 22	1550+00 TO 1562+00	9						5	5	
SHEET 17 OF 22	1562+00 TO 1574+00	3		1			1		5	
SHEET 18 OF 22	1574+00 TO 1586+00	1		1					1	391
SHEET 19 OF 22	1586+00 TO 1598+00	1		1	1			1	2	385
SHEET 20 OF 22	1598+00 TO END	2								1,070
SHEET 21 OF 22	US 287 BEGIN TO 474+75	1								567
SHEET 22 OF 22	US 287 474+75 TO 486+50	8					1			
	CSJ: 0014-16-255 TOTAL	**99**	**2**	**12**	**10**	**6**	**7**	**37**	**75**	**9,165**
	PROJECT TOTAL	**111**	**2**	**20**	**10**	**7**	**10**	**47**	**77**	**10,011**

KENNEDY CONSULTING
TBPE REGISTRATION NO. F-926

Texas Department of Transportation
© 2012

IH 35W FROM NORTH TARRANT PKWY TO IH 820

QUANTITY SUMMARY

SIGN ASSEMBLIES
(CONT'D)

SHEET 2 OF 3

DESIGN	FED. RD. DIV. NO.	FEDERAL AID PROJECT NO.		HIGHWAY NO.
KCI	6	(SEE TITLE SHEET)		IH 35W
GRAPHICS KCI	STATE	DISTRICT	COUNTY	SHEET NO.
CHECK KCI	TEXAS	FTW	TARRANT	134
CHECK KCI	CONTROL	SECTION	JOB	
	0014	16	255, ETC.	

FILENAME: S3BSUM00.dgn

DRAWING DATE: 7/13/2012

SUMMARY OF SIGN ASSEMBLIES

		650 2022	650 2028	650 2034	650 2040	650 2058	650 2068	650 2063	650 2083	650 2093
		INS OH SN SUP(25 FT CANT)	INS OH SN SUP(30 FT CANT)	INS OH SN SUP(35 FT CANT)	INS OH SN SUP(40 FT CANT)	INS OH SN SUP(55 FT BRDG)	INS OH SN SUP(65 FT BRDG)	INS OH SN SUP(60 FT BRDG)	INS OH SN SUP(80 FT BRDG)	INS OH SN SUP(90 FT BRDG)
		EA	EA	EA	EA	EA	EA	EA	EA	EA
CSJ: 0081-12-045										
SHEET 1 OF 22	BEGIN TO 1406+00		2			1		1		
SHEET 2 OF 22	1406+00 TO 1418+00									1
SHEET 3 OF 22	1418+00 TO 1430+00			1	1					
SHEET 4 OF 22	1430+00 TO 1442+00									
SHEET 5 OF 22	1442+00 TO 1454+00 (NB)									
SHEET 22 OF 22	US 287 35S-287W									
	CSJ: 0081-12-045 TOTAL	**0**	**2**	**1**	**1**	**1**	**0**	**1**	**0**	**1**
CSJ: 0014-16-255										
SHEET 5 OF 22	1442+00 TO 1454+00 (NB)			1						
SHEET 6 OF 22	1442+00 TO 1454+00 (SB)									
SHEET 7 OF 22	1454+00 TO 1466+00 (NB)									
SHEET 8 OF 22	1454+00 TO 1466+00 (SB)				1					
SHEET 9 OF 22	1466+00 TO 1478+00			2	1					
SHEET 10 OF 22	1478+00 TO 1490+00				1					
SHEET 11 OF 22	1490+00 TO 1502+00		2							1
SHEET 12 OF 22	1502+00 TO 1514+00				1					
SHEET 13 OF 22	1514+00 TO 1526+00		1	1						
SHEET 14 OF 22	1526+00 TO 1538+00				1					
SHEET 15 OF 22	1538+00 TO 1550+00	1	1							
SHEET 16 OF 22	1550+00 TO 1562+00									
SHEET 17 OF 22	1562+00 TO 1574+00				1				1	
SHEET 18 OF 22	1574+00 TO 1586+00								1	
SHEET 19 OF 22	1586+00 TO 1598+00			2						
SHEET 20 OF 22	1598+00 TO END									
SHEET 21 OF 22	US 287 BEGIN TO 474+75	3								
SHEET 22 OF 22	US 287 474+75 TO 486+50						1			
	CSJ: 0014-16-255 TOTAL	**4**	**4**	**6**	**6**	**0**	**1**	**0**	**2**	**1**
	PROJECT TOTAL	**4**	**6**	**7**	**7**	**1**	**1**	**1**	**2**	**2**

KENNEDY CONSULTING
TBPE REGISTRATION NO. F-926

Texas Department of Transportation
© 2012

IH 35W FROM NORTH TARRANT PKWY TO IH 820

QUANTITY SUMMARY

SIGN ASSEMBLIES (CONT'D)

SHEET 3 OF 3

DESIGN	FED. RD. DIV. NO.	FEDERAL AID PROJECT NO.		HIGHWAY NO.
KCI	6	(SEE TITLE SHEET)		IH 35W
GRAPHICS	STATE	DISTRICT	COUNTY	SHEET NO.
KCI	TEXAS	FTW	TARRANT	135
CHECK	CONTROL	SECTION	JOB	
KCI	0014	16	255, ETC.	

FILENAME: S3BSUM00.dgn

DRAWING DATE: 7/31/2012

SUMMARY OF STRIPING ITEMS

		666 2003	666 2006	666 2009	666 2012	666 2036	666 2039	666 2042	666 2048	666 2054	666 2057	666 2063	666 2069	666 2093	666 2096
		REFL PAV MRK TY I (W) 4" (BRK) (100MIL)	REFL PAV MRK TY I (W) 4" (DOT) (100MIL)	REFL PAV MRK TY I (W) 4" (LNDP) (100MIL)	REFL PAV MRK TY I (W) 4" (SLD) (100MIL)	REFL PAV MRK TY I (W) 8" (SLD) (100MIL)	REFL PAV MRK TY I (W) 12" (LNDP) (100MIL)	REFL PAV MRK TY I (W) 12" (SLD) (100MIL)	REFL PAV MRK TY I (W) 24" (SLD) (100MIL)	REFL PAV MRK TY I (W) (ARROW) (100MIL)	REFL PAV MRK TY I (W) (BIKE ARW) (100MIL)	REFL PAV MRK TY I (W) (BIKE SYML) (100MIL)	REFL PAV MRK TY I (W) (DBL ARROW) (100MIL)	REFL PAV MRK TY I (W) (UTURN ARW) (100MIL)	REFL PAV MRK TY I (W) (WORD) (100MIL)
		LF	LF	LF	LF	LF	LF	LF	LF	EA	EA	EA	EA	EA	EA
CSJ: 0081-12-045															
SHEET 1 OF 24	BEGIN TO 1406+00	290			1,001										
SHEET 2 OF 24	1406+00 TO 1418+00	613		200	3,878	1,722		63							
SHEET 3 OF 24	1418+00 TO 1430+00	601			4,779	2,360	90	938		3					2
SHEET 4 OF 24	1430+00 TO 1442+00	601			5,849	919	81	100		1					2
SHEET 5 OF 24	1442+00 TO 1454+00 (EAST)	91			1,481										
SHEET 6 OF 24	1442+00 TO 1454+00 (WEST)	91			725	596									
SHEET 22 OF 24	US 287 35S-287W				655										
	CSJ: 0081-12-045 TOTAL	**2,287**	**0**	**200**	**18,368**	**5,597**	**171**	**1,101**	**0**	**4**	**0**	**0**	**0**	**0**	**4**
CSJ: 0014-16-255															
SHEET 5 OF 24	1442+00 TO 1454+00 (EAST)	487			3,508	414		278							
SHEET 6 OF 24	1442+00 TO 1454+00 (WEST)	753			5,252	596									
SHEET 7 OF 24	1454+00 TO 1466+00 (EAST)	606			4,460	1,377	143	323		2					2
SHEET 8 OF 24	1454+00 TO 1466+00 (WEST)	901			4,616	453	219	300		1					1
SHEET 9 OF 24	1466+00 TO 1478+00	1,667			8,712	2,258	281	1,327	1,300	2					2
SHEET 10 OF 24	1478+00 TO 1490+00	2,096			9,160	1,681	468	624	1,011	2					2
SHEET 11 OF 24	1490+00 TO 1502+00	1,893			8,174	1,621	811			7			4	3	10
SHEET 12 OF 24	1502+00 TO 1514+00	2,535			8,890	812	556	179		1					1
SHEET 13 OF 24	1514+00 TO 1526+00	2,192			12,039	2,557	35	422		1					1
SHEET 14 OF 24	1526+00 TO 1538+00	2,294			11,845	2,729		202		2			1	1	3
SHEET 15 OF 24	1538+00 TO 1550+00	2,158		46	8,024	4,411	40	999		7			3	3	10
SHEET 16 OF 24	1550+00 TO 1562+00	2,356			7,671	1,587	301								
SHEET 17 OF 24	1562+00 TO 1574+00	2,057			6,873	1,060	457	300	7						
SHEET 18 OF 24	1574+00 TO 1586+00	1,575			8,110	313	526		1,555						
SHEET 19 OF 24	1586+00 TO 1598+00	1,074			4,714	210	468	287	481						
SHEET 20 OF 24	1598+00 TO END	275			1,217	729	244	138		1					1
SHEET 21 OF 24	US 287 BEGIN TO 474+50	91			1,215	994									
SHEET 22 OF 24	US 287 474+50 TO 486+50	672			2,815	1,292									
SHEET 23 OF 24	BASSWOOD BLVD	723	85		2,939	688		928	322	8	2	2			6
SHEET 24 OF 24	WESTERN CENTER BLVD	97	117		3,491	905		836	302	6			2		6
	CSJ: 0014-16-255 TOTAL	**26,502**	**202**	**46**	**123,725**	**26,687**	**4,549**	**7,143**	**4,978**	**40**	**2**	**2**	**10**	**7**	**45**
	PROJECT TOTAL	**28,789**	**202**	**246**	**142,093**	**32,284**	**4,720**	**8,244**	**4,978**	**44**	**2**	**2**	**10**	**7**	**49**

FILENAME: S3BSUM00.dgn

DRAWING DATE: 8/29/2012

KENNEDY CONSULTING
TBPE REGISTRATION NO. F-926

Texas Department of Transportation
© 2012

IH 35W FROM NORTH TARRANT PKWY TO IH 820

QUANTITY SUMMARY

STRIPING ITEMS

SHEET 1 OF 4

DESIGN	FED.RD. DIV.NO.	FEDERAL AID PROJECT NO.		HIGHWAY NO.
KCI	6	(SEE TITLE SHEET)		IH 35W
GRAPHICS	STATE	DISTRICT	COUNTY	SHEET NO.
KCI	TEXAS	FTW	TARRANT	136
CHECK	CONTROL	SECTION	JOB	
KCI	0014	16	255, ETC.	

SUMMARY OF STRIPING ITEMS

		666 2099	666 2111	666 2132	666 2142	666 2143	666 2145	666 2153	666 2155	666 2157	666 2160	666 2165	666 2172	666 2173
		REF PAV MRK TY I(W)18"(YLD TRI)(100MIL)	REFL PAV MRK TY I (Y) 4" (SLD)(100MIL)	REFL PAV MRK TY I (Y) 24"(SLD)(100MIL)	REF PAV MRK TY II (W) 4" (BRK)	REF PAV MRK TY II (W) 4" (DOT)	REF PAV MRK TY II (W) 4" (SLD)	REF PAV MRK TY II (W) 8" (SLD)	REF PAV MRK TY II (W) 12" (SLD)	REF PAV MRK TY II (W) 24" (SLD)	REF PAV MRK TY II (W) (ARROW)	REF PAV MRK TY II (W) (DBL ARROW)	REF PAV MRK TY II (W) (UTURN ARROW)	REF PAV MRK TY II (W) (WORD)
		EA	LF	LF	LF	LF	LF	LF	LF	LF	EA	EA	EA	EA
CSJ: 0081-12-045														
SHEET 1 OF 24	BEGIN TO 1406+00		1,001											
SHEET 2 OF 24	1406+00 TO 1418+00		4,221											
SHEET 3 OF 24	1418+00 TO 1430+00		4,779											
SHEET 4 OF 24	1430+00 TO 1442+00		5,866											
SHEET 5 OF 24	1442+00 TO 1454+00 (EAST)		1,488											
SHEET 6 OF 24	1442+00 TO 1454+00 (WEST)		725											
SHEET 22 OF 24	US 287 35S-287W		670											
	CSJ: 0081-12-045 TOTAL	**0**	**18,750**	**0**	**0**	**0**	**0**	**0**	**0**	**0**	**0**	**0**	**0**	**0**
CSJ: 0014-16-255														
SHEET 5 OF 24	1442+00 TO 1454+00 (EAST)		3,408											
SHEET 6 OF 24	1442+00 TO 1454+00 (WEST)		5,345											
SHEET 7 OF 24	1454+00 TO 1466+00 (EAST)		4,459											
SHEET 8 OF 24	1454+00 TO 1466+00 (WEST)		4,615											
SHEET 9 OF 24	1466+00 TO 1478+00		8,453											
SHEET 10 OF 24	1478+00 TO 1490+00		7,811											
SHEET 11 OF 24	1490+00 TO 1502+00		7,025		808		3,215	1,621			6	4	3	9
SHEET 12 OF 24	1502+00 TO 1514+00		8,733	72	1,335		2,585	712						
SHEET 13 OF 24	1514+00 TO 1526+00		12,039	824	991		3,881	774						
SHEET 14 OF 24	1526+00 TO 1538+00		11,537	286	568		2,218	524	172					
SHEET 15 OF 24	1538+00 TO 1550+00		7,176		160		418	344	132					
SHEET 16 OF 24	1550+00 TO 1562+00		7,512											
SHEET 17 OF 24	1562+00 TO 1574+00		6,670											
SHEET 18 OF 24	1574+00 TO 1586+00		6,666	270										
SHEET 19 OF 24	1586+00 TO 1598+00		5,117	739										
SHEET 20 OF 24	1598+00 TO END		1,232											
SHEET 21 OF 24	US 287 BEGIN TO 474+50		765											
SHEET 22 OF 24	US 287 474+50 TO 486+50		3,540											
SHEET 23 OF 24	BASSWOOD BLVD	30	1,648	50	723	85	2,939	688	928	322	8			6
SHEET 24 OF 24	WESTERN CENTER BLVD	30	1,582											
	CSJ: 0014-16-255 TOTAL	**60**	**115,333**	**2,241**	**4,585**	**85**	**15,256**	**4,663**	**1,232**	**322**	**14**	**4**	**3**	**15**
PROJECT TOTAL		**60**	**134,083**	**2,241**	**4,585**	**85**	**15,256**	**4,663**	**1,232**	**322**	**14**	**4**	**3**	**15**

FILENAME: S3BSUM00.dgn

DRAWING DATE: 8/29/2012

KENNEDY CONSULTING
TBPE REGISTRATION NO. F-926

Texas Department of Transportation
© 2012

IH 35W FROM NORTH TARRANT PKWY TO IH 820

QUANTITY SUMMARY

STRIPING ITEMS
(CONT'D)

SHEET 2 OF 4

DESIGN	FED.RD. DIV.NO.	FEDERAL AID PROJECT NO.		HIGHWAY NO.
KCI	6	(SEE TITLE SHEET)		IH 35W
GRAPHICS	STATE	DISTRICT	COUNTY	SHEET NO.
KCI	TEXAS	FTW	TARRANT	137
CHECK	CONTROL	SECTION	JOB	
KCI	0014	16	255, ETC.	

SUMMARY OF STRIPING ITEMS

		666 2174	666 2178	666 2185	672 2012	672 2014	672 2015	672 2017	677 2001	677 2003	677 2005	677 2007	677 2008	677 2009
		REF PAV MRK TY II (W) 18" (YLD TRI)	REF PAV MRK TY II (Y) 4" (SLD)	REF PAV MRK TY II (Y) 24" (SLD)	REFL PAV MRKR TY I-C	REFL PAV MRKR TY I-R	REFL PAV MRKR TY II-A-A	REFL PAV MRKR TY II-C-R	ELIM EXT PAV MRK & MRKS (4")	ELIM EXT PAV MRK & MRKS (8")	ELIM EXT PAV MRK & MRKS (12")	ELIM EXT PAV MRK & MRKS (24")	ELIM EXT PAV MRK & MRKS (ARROW)	ELIM EXT PAV MRK & MRKS (DBL ARROW)
		EA	LF	LF	EA	EA	EA	EA	LF	LF	LF	LF	EA	EA
CSJ: 0081-12-045														
SHEET 1 OF 24	BEGIN TO 1406+00							15						
SHEET 2 OF 24	1406+00 TO 1418+00					14		136						
SHEET 3 OF 24	1418+00 TO 1430+00							184						
SHEET 4 OF 24	1430+00 TO 1442+00							93						
SHEET 5 OF 24	1442+00 TO 1454+00 (EAST)							5						
SHEET 6 OF 24	1442+00 TO 1454+00 (WEST)							5						
SHEET 22 OF 24	US 287 35S-287W													
	CSJ: 0081-12-045 TOTAL	**0**	**0**	**0**	**0**	**14**	**0**	**438**	**0**	**0**	**0**	**0**	**0**	**0**
CSJ: 0014-16-255														
SHEET 5 OF 24	1442+00 TO 1454+00 (EAST)							53						
SHEET 6 OF 24	1442+00 TO 1454+00 (WEST)							64						
SHEET 7 OF 24	1454+00 TO 1466+00 (EAST)							132						
SHEET 8 OF 24	1454+00 TO 1466+00 (WEST)							113						
SHEET 9 OF 24	1466+00 TO 1478+00							279						
SHEET 10 OF 24	1478+00 TO 1490+00					28		283						
SHEET 11 OF 24	1490+00 TO 1502+00		2,057		74			239	3,149	912			8	2
SHEET 12 OF 24	1502+00 TO 1514+00		2,401	72		14		262	5,292					
SHEET 13 OF 24	1514+00 TO 1526+00		3,879	824		14		255	9,344					
SHEET 14 OF 24	1526+00 TO 1538+00		2,196	286	23	14		234	2,606	231				
SHEET 15 OF 24	1538+00 TO 1550+00		490		70			297						
SHEET 16 OF 24	1550+00 TO 1562+00					14		218						
SHEET 17 OF 24	1562+00 TO 1574+00							241						
SHEET 18 OF 24	1574+00 TO 1586+00							179						
SHEET 19 OF 24	1586+00 TO 1598+00							162						
SHEET 20 OF 24	1598+00 TO END							97						
SHEET 21 OF 24	US 287 BEGIN TO 474+50							55						
SHEET 22 OF 24	US 287 474+50 TO 486+50							99						
SHEET 23 OF 24	BASSWOOD BLVD	30	1,648	50	35			37	1,003	688	885	321	8	
SHEET 24 OF 24	WESTERN CENTER BLVD				51		30	5						
	CSJ: 0014-16-255 TOTAL	**30**	**12,671**	**1,232**	**253**	**84**	**30**	**3,304**	**21,394**	**1,831**	**885**	**321**	**16**	**2**
	PROJECT TOTAL	**30**	**12,671**	**1,232**	**253**	**98**	**30**	**3,742**	**21,394**	**1,831**	**885**	**321**	**16**	**2**

FILENAME: S3BSUM00.dgn

DRAWING DATE: 8/29/2012

KENNEDY CONSULTING
TBPE REGISTRATION NO. F-926

Texas Department of Transportation
© 2012

IH 35W FROM NORTH TARRANT PKWY TO IH 820

QUANTITY SUMMARY

STRIPING ITEMS
(CONT'D)

SHEET 3 OF 4

DESIGN	FED.RD. DIV.NO.	FEDERAL AID PROJECT NO.		HIGHWAY NO.
KCI	6	(SEE TITLE SHEET)		IH 35W
GRAPHICS	STATE	DISTRICT	COUNTY	SHEET NO.
KCI	TEXAS	FTW	TARRANT	137A
CHECK	CONTROL	SECTION	JOB	
KCI	0014	16	255, ETC.	

SUMMARY OF STRIPING ITEMS

		677 2018	678 2013	678 2016	678 2021	678 2023	678 2024	678 2027	678 2028	678 2029	678 2031	678 2036	678 2045	678 2047
		ELIM EXT PAV MRK & MRKS (WORD)	PAV SURF PREP FOR MRK (RPM)	PAV SURF PREP FOR MRK (UTURN ARR)	PAV SURF PREP FOR MRK (BLAST CLN) (4")	PAV SURF PREP FOR MRK (BLAST CLN) (12")	PAV SURF PREP FOR MRK (BLAST CLN) (24")	PAV SURF PREP FOR MRK (BLAST CLN) (8")	PAV SURF PREP FOR MRK (BLST CLN) (ARRWS)	PAV SURF PREP FOR MRK (BLST CLN) (WORDS)	PAV SURF PREP MRKS (BLAST CLN) (DBLARW)	PV SRF PRP FOR MRK(BLT CLN) (18"YLD TRI)	PAV SURF PREP FOR MRK (BIKE SYMBOL)	PAV SURF PREP FOR MRK (BIKE ARROW)
		EA	EA	EA	LF	LF	LF	LF	EA	EA	EA	LF	EA	EA
CSJ: 0081-12-045														
SHEET 1 OF 24	BEGIN TO 1406+00		15	0	2,292	0	0	0						
SHEET 2 OF 24	1406+00 TO 1418+00		150	0	8,912	63	0	1,722						
SHEET 3 OF 24	1418+00 TO 1430+00		184	0	10,159	1,028	0	2,360	3	2				
SHEET 4 OF 24	1430+00 TO 1442+00		93	0	12,316	181	0	919	1	2				
SHEET 5 OF 24	1442+00 TO 1454+00 (EAST)		5	0	3,060	0	0	0						
SHEET 6 OF 24	1442+00 TO 1454+00 (WEST)		5	0	1,541	0	0	596						
SHEET 22 OF 24	US 287 35S-287W			0	1,325	0	0	0						
	CSJ: 0081-12-045 TOTAL	**0**	**452**	**0**	**39,605**	**1,272**	**0**	**5,597**	**4**	**4**	**0**	**0**	**0**	**0**
CSJ: 0014-16-255														
SHEET 5 OF 24	1442+00 TO 1454+00 (EAST)		53	0	7,403	278	0	414						
SHEET 6 OF 24	1442+00 TO 1454+00 (WEST)		64	0	11,350	0	0	596						
SHEET 7 OF 24	1454+00 TO 1466+00 (EAST)		132	0	9,525	466	0	1,377	2	2				
SHEET 8 OF 24	1454+00 TO 1466+00 (WEST)		113	0	10,132	519	0	453	1	1				
SHEET 9 OF 24	1466+00 TO 1478+00		279	0	18,832	1,608	1,300	2,258	2	2				
SHEET 10 OF 24	1478+00 TO 1490+00		311	0	19,067	1,092	1,011	1,681	2	2				
SHEET 11 OF 24	1490+00 TO 1502+00	8	313	3	17,092	811	0	1,621	7	10	4			
SHEET 12 OF 24	1502+00 TO 1514+00		276	0	20,158	735	72	812	1	1				
SHEET 13 OF 24	1514+00 TO 1526+00		269	0	26,270	457	824	2,557	1	1				
SHEET 14 OF 24	1526+00 TO 1538+00		271	1	25,676	202	286	2,729	2	3	1			
SHEET 15 OF 24	1538+00 TO 1550+00		367	3	17,404	1,039	0	4,411	7	10	3			
SHEET 16 OF 24	1550+00 TO 1562+00		232	0	17,539	301	0	1,587		0				
SHEET 17 OF 24	1562+00 TO 1574+00		241	0	15,600	757	7	1,060		0				
SHEET 18 OF 24	1574+00 TO 1586+00		179	0	16,351	526	1,825	313		0				
SHEET 19 OF 24	1586+00 TO 1598+00		162	0	10,905	755	1,220	210		0				
SHEET 20 OF 24	1598+00 TO END		97	0	2,724	382	0	729	1	1				
SHEET 21 OF 24	US 287 BEGIN TO 474+50		55	0	2,071	0	0	994		0				
SHEET 22 OF 24	US 287 474+50 TO 486+50		99	0	7,027	0	0	1,292		0				
SHEET 23 OF 24	BASSWOOD BLVD	8	72	0	5,395	928	372	688	8	6		30	2	2
SHEET 24 OF 24	WESTERN CENTER BLVD		86	0	5,287	836	302	905	6	6	2	30		
	CSJ: 0014-16-255 TOTAL	**16**	**3,671**	**7**	**265,808**	**11,692**	**7,219**	**26,687**	**40**	**45**	**10**	**60**	**2**	**2**
	PROJECT TOTAL	**16**	**4,123**	**7**	**305,413**	**12,964**	**7,219**	**32,284**	**44**	**49**	**10**	**60**	**2**	**2**

FILENAME: S3BSUM00.dgn

DRAWING DATE: 08/29/2012

KENNEDY CONSULTING
TBPE REGISTRATION NO. F-926

Texas Department of Transportation
© 2012

IH 35W FROM NORTH TARRANT PKWY TO IH 820

QUANTITY SUMMARY

STRIPING ITEMS
(CONT'D)

SHEET 4 OF 4

DESIGN	FED. RD. DIV. NO.	FEDERAL AID PROJECT NO.		HIGHWAY NO.
KCI	6	(SEE TITLE SHEET)		IH 35W
GRAPHICS KCI	STATE	DISTRICT	COUNTY	SHEET NO.
CHECK KCI	TEXAS	FTW	TARRANT	137B
CHECK KCI	CONTROL	SECTION	JOB	
	0014	16	255, ETC.	

SUMMARY OF DELINEATION ITEMS

		658 2240	658 2263	658 2269	658 2278	658 2292	658 2364	658 2365
		INSTL DEL ASSM (D-SW)SZ 1(FLX)GF2	INSTL DEL ASSM (D-SY)SZ 1(FLX)GND	INSTL DEL ASSM (D-SY)SZ 1(FLX)GF2	INSTL DEL ASSM (D-SY)SZ (TYC)CTB(BI)	INSTL DEL ASSM (D-DW)SZ 1(FLX)GND	INSTL DEL ASSM (D-SW)SZ 1(TYC)CTB(BR)	INSTL DEL ASSM (D-SY)SZ 1(TYC)CTB(BR)
		EA	EA	EA	EA	EA	EA	EA
CSJ: 0081-12-045								
SHEET 1 OF 24	BEGIN TO 1406+00	1						7
SHEET 2 OF 24	1406+00 TO 1418+00	3	10	7		3	1	9
SHEET 3 OF 24	1418+00 TO 1430+00	17	5	5		5	5	20
SHEET 4 OF 24	1430+00 TO 1442+00	4	11		4	4		10
SHEET 5 OF 24	1442+00 TO 1454+00 (EAST)		7		2			1
SHEET 6 OF 24	1442+00 TO 1454+00 (WEST)							2
SHEET 22 OF 24	US 287 35S-287W		6					
	CSJ: 0081-12-045 TOTAL	**25**	**39**	**12**	**6**	**12**	**6**	**49**
CSJ: 0014-16-255								
SHEET 5 OF 24	1442+00 TO 1454+00 (EAST)	11	2	1	3	3	11	13
SHEET 6 OF 24	1442+00 TO 1454+00 (WEST)	8	7	1		3	20	25
SHEET 7 OF 24	1454+00 TO 1466+00 (EAST)	3	8	6	5	3	12	7
SHEET 8 OF 24	1454+00 TO 1466+00 (WEST)	9				3	7	10
SHEET 9 OF 24	1466+00 TO 1478+00	7	18	3	4	11	8	5
SHEET 10 OF 24	1478+00 TO 1490+00	4	6		5	7	9	1
SHEET 11 OF 24	1490+00 TO 1502+00	5			3		18	4
SHEET 12 OF 24	1502+00 TO 1514+00	8	5	1	5		11	14
SHEET 13 OF 24	1514+00 TO 1526+00	9	1	4	5	8	47	55
SHEET 14 OF 24	1526+00 TO 1538+00	2	4	6	5	0	69	45
SHEET 15 OF 24	1538+00 TO 1550+00	9		1	4	7	21	6
SHEET 16 OF 24	1550+00 TO 1562+00	21	7		5	2	2	25
SHEET 17 OF 24	1562+00 TO 1574+00	13			5	9	1	19
SHEET 18 OF 24	1574+00 TO 1586+00	13		1	5	3		16
SHEET 19 OF 24	1586+00 TO 1598+00	5	1	1	3	5	1	3
SHEET 20 OF 24	1598+00 TO END	9				4		
SHEET 21 OF 24	US 287 BEGIN TO 474+50	1		1		13		
SHEET 22 OF 24	US 287 474+50 TO 486+50	2		5		15		1
SHEET 23 OF 24	BASSWOOD BLVD			2			8	
SHEET 24 OF 24	WESTERN CENTER BLVD							
	CSJ: 0014-16-255 TOTAL	**139**	**59**	**33**	**57**	**96**	**245**	**249**
	PROJECT TOTAL	**164**	**98**	**45**	**63**	**108**	**251**	**298**

FILENAME: S3BSUM00.dgn

DRAWING DATE: 7/31/2012

KENNEDY CONSULTING
TBPE REGISTRATION NO. F-926

Texas Department of Transportation
© 2012

IH 35W FROM NORTH TARRANT PKWY TO IH 820

QUANTITY SUMMARY

DELINEATION ITEMS

SHEET 1 OF 1

DESIGN	FED.RD. DIV.NO.	FEDERAL AID PROJECT NO.		HIGHWAY NO.
KCI	6	(SEE TITLE SHEET)		IH 35W
GRAPHICS KCI	STATE	DISTRICT	COUNTY	SHEET NO.
CHECK KCI	TEXAS	FTW	TARRANT	138
CHECK	CONTROL	SECTION	JOB	
KCI	0014	16	255, ETC.	

SUMMARY OF ILLUMINATION QUANTITIES

	416 2026	416 2029	432 2001	432 2066	610 2025	610 2059	613 2006
	DRILL SHAFT (HIGH MAST POLE) (60 IN)	DRILL SHAFT (RDWY ILL POLE) (30 IN)	RIPRAP (CONC) (4")	RIPRAP (CONC) (CL B)	INS RD IL AM (TY SA) 40T - 8 (.25 KW) S	INS RD IL AM (U/P) (TY IF) (.15 KW)	HI MST IL POLE (150 FT) (100 MPH)
	LF	LF	CY	CY	EA	EA	EA
CSJ: 0081-12-045							
	150		13				5
CSJ: 0081-12-045 TOTAL	150	0	13	0	0	0	5
CSJ: 0014-16-255							
	542	48	47	3	6	17	20
CSJ: 0014-16-255 TOTAL	542	48	47	3	6	17	20
PROJECT TOTAL	**692**	**48**	**60**	**3**	**6**	**17**	**25**

Kimley-Horn and Associates, Inc.
TEXAS REGISTERED ENGINEERING FIRM F-928

Texas Department of Transportation
© 2012

IH 35W FROM NORTH TARRANT PKWY TO IH 820

ILLUMINATION SUMMARY

SHEET 1 OF 5

DESIGN	FED.RD. DIV.NO.	FEDERAL AID PROJECT NO.		HIGHWAY NO.
KHA	6	(SEE TITLE SHEET)		IH 35W
GRAPHICS KHA	STATE	DISTRICT	COUNTY	SHEET NO.
CHECK KHA	TEXAS	FTW	TARRANT	139
CHECK KHA	CONTROL	SECTION	JOB	
	0014	16	255, ETC.	

$PENTBLS$
$PLTDRVS$
DRAWING DATE: 7/13/2012
$USER$
FILENAME: S3BPILLSUM01.dgn

SUMMARY OF ILLUMINATION QUANTITIES

		614 2002	614 2004	614 2006	618 2018	618 2035	618 2046	618 2080
		HI MST IL ASM (12-400 WATT) ASYM (TY B)	HI MST IL ASM (12-400 WATT) (SYM)	HI MST IL ASM (12-400 WT) ASYM (TY B) SHLD	CONDT (PVC) (SCHD 40) (2")	CONDT (PVC) (SCHD 80) (2") (BORE)	CONDT (RM) (1")	CONDT (PVC) (SCHD 40) (2") (CONC ENCSE)
		EA	EA	EA	LF	LF	LF	LF
CSJ: 0081-12-045								
		4	1		4,450	365		
	CSJ: 0081-12-045 TOTAL	4	1	0	4,450	365	0	0
CSJ: 0014-16-255								
		15	4	1	16,240	3,555	721	263
	CSJ: 0014-16-255 TOTAL	15	4	1	16,240	3,555	721	263
	PROJECT TOTAL	19	5	1	20,690	3,920	721	263

$USER$
FILENAME: S3BPILLSUM02.dgn
$PENTBL5$
$PLTDRV5$
DRAWING DATE: 7/13/2012

Kimley-Horn and Associates, Inc.
TEXAS REGISTERED ENGINEERING FIRM F-928

Texas Department of Transportation
© 2012

IH 35W FROM NORTH TARRANT PKWY TO IH 820

ILLUMINATION SUMMARY

SHEET 2 OF 5

DESIGN	FED. RD. DIV. NO.	FEDERAL AID PROJECT NO.		HIGHWAY NO.
KHA	6	(SEE TITLE SHEET)		IH 35W
GRAPHICS KHA	STATE	DISTRICT	COUNTY	SHEET NO.
CHECK KHA	TEXAS	FTW	TARRANT	140
CHECK	CONTROL	SECTION	JOB	
KHA	0014	16	255, ETC.	

SUMMARY OF ILLUMINATION QUANTITIES

		618 2091	620 2003	620 2004	620 2007	620 2008	620 2009	620 2010
		CONDT (PVC) (SCHD 40) (1") (CONC ENCSE)	ELEC CONDR (NO. 2) BARE	ELEC CONDR (NO. 2) INSULATED	ELEC CONDR (NO. 4) BARE	ELEC CONDR (NO. 4) INSULATED	ELEC CONDR (NO. 6) BARE	ELEC CONDR (NO. 6) INSULATED
		EA	LF	LF	LF	LF	LF	LF
CSJ: 0081-12-045							3,135	6,590
	CSJ: 0081-12-045 TOTAL	0	0	0	0	0	3,135	6,590
CSJ: 0014-16-255		721	4,725	10,030	4,495	9,230	4,185	12,440
	CSJ: 0014-16-255 TOTAL	721	4,725	10,030	4,495	9,230	4,185	12,440
	PROJECT TOTAL	721	4,725	10,030	4,495	9,230	7,320	19,030

$USER$
FILENAME: S3BPILLSUM03.dgn

$PENTBL$
$PLTDRV$
DRAWING DATE: 7/13/2012

Kimley-Horn and Associates, Inc.
TEXAS REGISTERED ENGINEERING FIRM F-928

Texas Department of Transportation
© 2012

IH 35W FROM NORTH TARRANT PKWY TO IH 820

ILLUMINATION SUMMARY

SHEET 3 OF 5

DESIGN	FED. RD. DIV. NO.	FEDERAL AID PROJECT NO.		HIGHWAY NO.
KHA	6	(SEE TITLE SHEET)		IH 35W
GRAPHICS KHA	STATE	DISTRICT	COUNTY	SHEET NO.
CHECK KHA	TEXAS	FTW	TARRANT	141
CHECK KHA	CONTROL 0014	SECTION 16	JOB 255, ETC.	

SUMMARY OF ILLUMINATION QUANTITIES

		620 2011	620 2012	620 2015	620 2016	624 2013	624 2014	628 2216
		ELEC CONDR (NO. 8) BARE	ELEC CONDR (NO. 8) INSULATED	ELEC CONDR (NO. 12) BARE	ELEC CONDR (NO. 12) INSULATED	GROUND BOX TY D (162922)	GROUND BOX TY D (162922) W/APPRON	ELC SRV TY A 240 / 480 100 (NS) AL (E) PS (U)
		LF	LF	LF	LF	EA	EA	EA
CSJ: 0081-12-045								
		1,560	3,470			5	9	1
	CSJ: 0081-12-045 TOTAL	1,560	3,470	0	0	5	9	1
CSJ: 0014-16-255								
		6,591	17,990	1,490	2,980	24	42	1
	CSJ: 0014-16-255 TOTAL	6,591	17,990	1,490	2,980	24	42	1
	PROJECT TOTAL	8,151	21,460	1,490	2,980	29	51	2

$PENTBLS$
$PLTDRVS$
DRAWING DATE: 7/13/2012
$USER$
FILENAME: S3BPILLSUM04.dgn

Kimley-Horn and Associates, Inc.
TEXAS REGISTERED ENGINEERING FIRM F-928

Texas Department of Transportation
© 2012

IH 35W FROM NORTH TARRANT PKWY TO IH 820

ILLUMINATION SUMMARY

SHEET 4 OF 5

DESIGN	FED. RD. DIV. NO.	FEDERAL AID PROJECT NO.		HIGHWAY NO.
KHA	6	(SEE TITLE SHEET)		IH 35W
GRAPHICS KHA	STATE	DISTRICT	COUNTY	SHEET NO.
CHECK KHA	TEXAS	FTW	TARRANT	142
CHECK KHA	CONTROL	SECTION	JOB	
	0014	16	255, ETC.	

SUMMARY OF ILLUMINATION QUANTITIES

		628 2256	628 2257
		ELC SRV TY A 240 / 480 125 (NS) AL (E) PS (U)	ELC SRV TY A 240 / 480 150 (NS) AL (E) PS (U)
		EA	EA
CSJ: 0081-12-045			
	CSJ: 0081-12-045 TOTAL	0	0
CSJ: 0014-16-255			
		2	1
	CSJ: 0014-16-255 TOTAL	2	1
	PROJECT TOTAL	2	1

$PENTBLS$
$PLTDRVS$
DRAWING DATE: 7/13/2012

$USER$
FILENAME: S3BPILLSUM05.dgn

Kimley-Horn and Associates, Inc.
TEXAS REGISTERED ENGINEERING FIRM F-928

Texas Department of Transportation
© 2012

IH 35W FROM NORTH TARRANT PKWY TO IH 820

ILLUMINATION SUMMARY

SHEET 5 OF 5

DESIGN	FED. RD. DIV. NO.	FEDERAL AID PROJECT NO.		HIGHWAY NO.
KHA	6	(SEE TITLE SHEET)		IH 35W
GRAPHICS	STATE	DISTRICT	COUNTY	SHEET NO.
KHA	TEXAS	FTW	TARRANT	143
CHECK	CONTROL	SECTION	JOB	
KHA	0014	16	255, ETC.	
CHECK				
KHA				

SUMMARY OF ITS ITEMS

		401 2001	416 2019	416 2004	416 2006	416 2007	416 2020	416 2021	416 2022	432 2001
		FLOWABLE BACKFILL	DRILL SHAFT (SIGN MTS) (30 IN)	DRILL SHAFT (36 IN)	DRILL SHAFT (48 IN)	DRILL SHAFT (54 IN)	DRILL SHAFT (SIGN MTS) (36 IN)	DRILL SHAFT (SIGN MTS) (42 IN)	DRILL SHAFT (SIGN MTS) (48 IN)	RIPRAP (CONC) (4")
		CY	LF	LF	LF	LF	LF	LF	LF	CY
CSJ: 0081-12-045										
		397	80	47	0	0	0	0	0	4
	CSJ: 0081-12-045 TOTAL	**397**	**80**	**47**	**0**	**0**	**0**	**0**	**0**	**4**
CSJ: 0014-16-255										
		1,181	204	316	36	41	152	40	15	14
	Supplemental ITS Items			84	40					3
	CSJ: 0014-16-255 TOTAL	**1,181**	**204**	**400**	**76**	**41**	**152**	**40**	**15**	**17**
	PROJECT TOTAL	**1,578**	**284**	**447**	**76**	**41**	**152**	**40**	**15**	**21**

NOTE: SUPPLEMENTAL ITS ITEMS LISTED ARE FOR CONTRACTOR BIDDING PURPOSES ONLY AND SHALL NOT BE CONSTRUCTED WITHOUT TXDOT AUTHORIZATION. DESIGN FOR THESE ITEMS ARE NOT INCLUDED IN THIS PACKAGE.

SUMMARY OF ITS ITEMS

SHEET	LOCATION	618 2018	618 2019	618 2022	618 2024	618 2025	618 2052	420 2091
		CONDT (PVC) (SCHD 40) (2")	CONDT (PVC) (SCHD 40) (2") (BORE)	CONDT (PVC) (SCHD 40) (3")	CONDT (PVC) (SCHD 40) (4")	CONDT (PVC) (SCHD 40) (4") (BORE)	CONDT (RM) (2")	CL B CONC (MISC)
		LF	LF	LF	LF	LF	LF	CY
CSJ: 0081-12-045								
		160	0	50	2,380	1,105	230	7
	CSJ: 0081-12-045 TOTAL	**160**	**0**	**50**	**2,380**	**1,105**	**230**	**7**
CSJ: 0014-16-255								
		1,900	140	150	21,435	8,130	910	38
	Supplemental ITS Items				4,200		120	3
	CSJ: 0014-16-255 TOTAL	**1,900**	**140**	**150**	**25,635**	**8,130**	**1,030**	**41**
	PROJECT TOTAL	**2,060**	**140**	**200**	**28,015**	**9,235**	**1,260**	**48**

NOTE: SUPPLEMENTAL ITS ITEMS LISTED ARE FOR CONTRACTOR BIDDING PURPOSES ONLY AND SHALL NOT BE CONSTRUCTED WITHOUT TXDOT AUTHORIZATION. DESIGN FOR THESE ITEMS ARE NOT INCLUDED IN THIS PACKAGE.

Kimley-Horn and Associates, Inc.
TEXAS REGISTERED ENGINEERING FIRM F-928

Texas Department of Transportation
© 2012

IH 35W FROM NORTH TARRANT PKWY TO IH 820

ITS SUMMARY

SHEET 1 OF 6

DESIGN	FED.RD. DIV.NO.	FEDERAL AID PROJECT NO.		HIGHWAY NO.
KHA	6	(SEE TITLE SHEET)		IH 35W
GRAPHICS KHA	STATE	DISTRICT	COUNTY	SHEET NO.
CHECK KHA	TEXAS	FTW	TARRANT	144
CHECK	CONTROL	SECTION	JOB	
KHA	0014	16	255, ETC.	

IH35W_3B.tbl
S3B_KCI_Half(PS-PDF).plt
DRAWING DATE: 8/30/2012
kevin.currykosky
FILENAME: S3BPITSSUM01.dgn

SUMMARY OF ITS ITEMS

SHEET	LOCATION	620 2001 ELEC CONDR (NO. 1) BARE	620 2002 ELEC CONDR (NO. 1) INSULATED	620 2003 ELEC CONDR (NO. 2) BARE	620 2004 ELEC CONDR (NO. 2) INSULATED	620 2007 ELEC CONDR (NO. 4) BARE	620 2008 ELEC CONDR (NO. 4) INSULATED	620 2009 ELEC CONDR (NO. 6) BARE	620 2010 ELEC CONDR (NO. 6) INSULATED	620 2018 ELEC CONDR (NO. 14) INSULATED
		LF	LF	LF	LF	LF	LF	LF	LF	LF
CSJ: 0081-12-045										
		110	0	570	1,420	0	0	715	1,385	19,125
	CSJ: 0081-12-045 TOTAL	**110**	**0**	**570**	**1,420**	**0**	**0**	**715**	**1,385**	**19,125**
CSJ: 0014-16-255										
		3,550	9,510	2,715	9,780	1,915	6,430	385	840	66,190
	Supplemental ITS Items				2,400		3,600	2,400		
	CSJ: 0014-16-255 TOTAL	**3,550**	**9,510**	**2,715**	**12,180**	**1,915**	**10,030**	**2,785**	**840**	**66,190**
	PROJECT TOTAL	**3,660**	**9,510**	**3,285**	**13,600**	**1,915**	**10,030**	**3,500**	**2,225**	**85,315**

NOTE: SUPPLEMENTAL ITS ITEMS LISTED ARE FOR CONTRACTOR BIDDING PURPOSES ONLY AND SHALL NOT BE CONSTRUCTED WITHOUT TXDOT AUTHORIZATION. DESIGN FOR THESE ITEMS ARE NOT INCLUDED IN THIS PACKAGE.

SUMMARY OF ITS ITEMS

SHEET	LOCATION	620 2019 ELEC CONDR (NO. 1/0) BARE	620 2020 ELEC CONDR (NO. 1/0) INSULATED	620 2021 ELEC CONDR (NO. 2/0) BARE	620 2022 ELEC CONDR (NO. 2/0) INSULATED	620 2024 ELEC CONDR (NO. 3/0) INSULATED	620 2025 ELEC CONDR (NO. 4/0) BARE	620 2027 ELEC CONDR (350 KCMIL) INSULATED	624 2007 GROUND BOX TY A (122311)	624 2008 GROUND BOX TY A (122311) W/APRON
		LF	LF	LF	LF	LF	LF	LF	EA	EA
CSJ: 0081-12-045										
		1,215	1,820	0	0	1,830	190	0	0	14
	CSJ: 0081-12-045 TOTAL	**1,215**	**1,820**	**0**	**0**	**1,830**	**190**	**0**	**0**	**14**
CSJ: 0014-16-255										
		2,955	7,915	2,640	6,360	12,915	805	5,490	3	63
	Supplemental ITS Items									14
	CSJ: 0014-16-255 TOTAL	**2,955**	**7,915**	**2,640**	**6,360**	**12,915**	**805**	**5,490**	**3**	**77**
	PROJECT TOTAL	**4,170**	**9,735**	**2,640**	**6,360**	**14,745**	**995**	**5,490**	**3**	**91**

NOTE: SUPPLEMENTAL ITS ITEMS LISTED ARE FOR CONTRACTOR BIDDING PURPOSES ONLY AND SHALL NOT BE CONSTRUCTED WITHOUT TXDOT AUTHORIZATION. DESIGN FOR THESE ITEMS ARE NOT INCLUDED IN THIS PACKAGE.

Kimley-Horn and Associates, Inc.
TEXAS REGISTERED ENGINEERING FIRM F-928

Texas Department of Transportation
© 2012

IH 35W FROM NORTH TARRANT PKWY TO IH 820

ITS SUMMARY

SHEET 2 OF 6

DESIGN	FED.RD. DIV.NO.	FEDERAL AID PROJECT NO.		HIGHWAY NO.
KHA	6	(SEE TITLE SHEET)		IH 35W
GRAPHICS KHA	STATE	DISTRICT	COUNTY	SHEET NO.
CHECK KHA	TEXAS	FTW	TARRANT	145
CHECK	CONTROL	SECTION	JOB	
KHA	0014	16	255, ETC.	

kevin.currykosky
FILENAME: S3BPITSSUM02.dgn
IH35W_3B_TBL
S3B_KCI_Half(PS-PDF).plt
DRAWING DATE: 8/28/2012

SUMMARY OF ITS ITEMS

SHEET	LOCATION	624 2014 GROUND BOX TY D (162922) W/APPRON	624 2021 GROUND BOX TY AS W/APRON	624 2022 GROUND BOX TY DS W/APRON	628 2239 ELC SRV TY D 120 / 240 100 (NS) SS (N) GC (O)	628 2369 ELC SRV TY D 120 / 240 125 (NS) SS (N) GC (O)	628 2307 ELC SRV TY D 120 / 240 200 (NS) SS (N) GC (O)	628 2370 ELC SRV TY D 120 / 240 100 (NS) SS (N) GC (U)
		EA	EA	CY	EA	EA	EA	EA
CSJ: 0081-12-045								
		7	19	2	3	0	1	0
	CSJ: 0081-12-045 TOTAL	**7**	**19**	**2**	**3**	**0**	**1**	**0**
CSJ: 0014-16-255								
		40	83	5	4	1	5	2
	Supplemental ITS Items	14					1	
	CSJ: 0014-16-255 TOTAL	**54**	**83**	**5**	**4**	**1**	**6**	**2**
	PROJECT TOTAL	**61**	**102**	**7**	**7**	**1**	**7**	**2**

NOTE: SUPPLEMENTAL ITS ITEMS LISTED ARE FOR CONTRACTOR BIDDING PURPOSES ONLY AND SHALL NOT BE CONSTRUCTED WITHOUT TXDOT AUTHORIZATION. DESIGN FOR THESE ITEMS ARE NOT INCLUDED IN THIS PACKAGE.

SUMMARY OF ITS ITEMS

SHEET	LOCATION	628 2371 ELC SRV TY D 120 / 240 150 (NS) SS (N) GC (U)	628 2372 ELC SRV TY D 120 / 240 175 (NS) SS (N) GC (U)	628 2373 ELC SRV TY D 120 / 240 200 (NS) SS (N) GC (U)	650 2034 INS OH SN SUP (35 FT CANT)	650 2058 INS OH SN SUP (55 FT BRDG)	650 2068 INS OH SN SUP (65 FT BRDG)	650 2083 INS OH SN SUP (80 FT BRDG)
		EA	EA	EA	EA	EA	EA	EA
CSJ: 0081-12-045								
		0	0	0	0	2	0	0
	CSJ: 0081-12-045 TOTAL	**0**	**0**	**0**	**0**	**2**	**0**	**0**
CSJ: 0014-16-255								
		2	1	2	1	4	2	2
	Supplemental ITS Items							
	CSJ: 0014-16-255 TOTAL	**2**	**1**	**2**	**1**	**4**	**2**	**2**
	PROJECT TOTAL	**2**	**1**	**2**	**1**	**6**	**2**	**2**

NOTE: SUPPLEMENTAL ITS ITEMS LISTED ARE FOR CONTRACTOR BIDDING PURPOSES ONLY AND SHALL NOT BE CONSTRUCTED WITHOUT TXDOT AUTHORIZATION. DESIGN FOR THESE ITEMS ARE NOT INCLUDED IN THIS PACKAGE.

kevin.currykosky
FILENAME: S3BPITSSUM03.dgn

IH35W_3B.TBL
S3B_KCI_Half(PS-PDF).plt
DRAWING DATE: 8/21/2012

Kimley-Horn and Associates, Inc.
TEXAS REGISTERED ENGINEERING FIRM F-928

Texas Department of Transportation

© 2012

IH 35W FROM NORTH TARRANT PKWY TO IH 820

ITS SUMMARY

SHEET 3 OF 6

DESIGN	FED.RD. DIV.NO.	FEDERAL AID PROJECT NO.		HIGHWAY NO.
KHA	6	(SEE TITLE SHEET)		IH 35W
GRAPHICS KHA	STATE	DISTRICT	COUNTY	SHEET NO.
CHECK KHA	TEXAS	FTW	TARRANT	146
CHECK	CONTROL	SECTION	JOB	
KHA	0014	16	255, ETC.	

SUMMARY OF ITS ITEMS

SHEET	LOCATION	650 2108	8899 2001	8899 2002	8899 2003		8898 2002	8898 2001	8898 2003	8898 2004	8898 2005
		INS OH SN SUP (105 FT BRDG)	MULTI-DUCT CONDUIT SYSTEM (SCH 40) (4")	MULTI-DUCT CONDUIT SYSTEM (SCH 40) (4") (BORE)	MULTI-DUCT CONDUIT SYSTEM (SCH 80) (4")	JUNCTION BOX (242412) ****	REMOVE AND RELOCATE EXISTING LED DMS SYSTEM	REMOVE AND RELOCATE EXISTING CCTV FIELD EQUIPMENT	REMOVE AND RELOCATE EXISTING RVSD	REMOVE AND RELOCATE EXISTING SSR LINK	REMOVE AND RELOCATE EXISTING WER LINK
		EA	LF	LF	LF	EA	EA	EA	EA	EA	EA
CSJ: 0081-12-045											
		0	13,565	4,510	0	0	0	0	0	0	0
	CSJ: 0081-12-045 TOTAL	**0**	**13,565**	**4,510**	**0**	**0**	**0**	**0**	**0**	**0**	**0**
CSJ: 0014-16-255											
		1	30,400	19,825	680	4	2	1	1	3	1
	Supplemental ITS Items										
	CSJ: 0014-16-255 TOTAL	**1**	**30,400**	**19,825**	**680**	**4**	**2**	**1**	**1**	**3**	**1**
	PROJECT TOTAL	**1**	**43,965**	**24,335**	**680**	**4**	**2**	**1**	**1**	**3**	**1**

NOTE: SUPPLEMENTAL ITS ITEMS LISTED ARE FOR CONTRACTOR BIDDING PURPOSES ONLY AND SHALL NOT BE CONSTRUCTED WITHOUT TXDOT AUTHORIZATION. DESIGN FOR THESE ITEMS ARE NOT INCLUDED IN THIS PACKAGE.

**** - JUNCTION BOX (242412) WILL BE SUBSIDIARY TO MULTI-DUCT CONDUIT SYSTEM (SCH 80) (4") ITEM 8899

Kimley-Horn and Associates, Inc.
TEXAS REGISTERED ENGINEERING FIRM F-928

Texas Department of Transportation
© 2012

IH 35W FROM NORTH TARRANT PKWY TO IH 820

ITS SUMMARY

SHEET 4 OF 6

DESIGN	FED. RD. DIV. NO.	FEDERAL AID PROJECT NO.		HIGHWAY NO.
KHA	6	(SEE TITLE SHEET)		IH 35W
GRAPHICS KHA	STATE	DISTRICT	COUNTY	SHEET NO.
CHECK KHA	TEXAS	FTW	TARRANT	147
CHECK	CONTROL	SECTION	JOB	
KHA	0014	16	255, ETC.	

IH35W_3B_TBL
S3B_KCI_Half(PS-PDF).plt
DRAWING DATE: 8/21/2012

kevin.currykosky
FILENAME: S3BPITSSUM04.dgn

SUMMARY OF ITS ITEMS - SATELLITE BUILDING

SHEET	LOCATION	247 2064 FL BS (CMP IN PLC) (TY A GR 4) (6")	310 2026 PRIME COAT (EC-30)	3224 2008 O-GR HMA (QCOA) TY-B PG64-22	550 2027 CHAIN LINK FENCE (INSTALL) (8') (BARB TOP)	550 2069 GATE (INSTALL) (DBL) (BARB TOP) (8' X 18')	666 2012 REFL PAV MRK TY 1 (W) (4") (SLD) (100MIL)
		SY	GAL	TON	LF	EA	LF
CSJ: 0081-12-045							
		0	0	0	0		0
	CSJ: 0081-12-045 TOTAL	**0**	**0**	**0**	**0**	**0**	**0**
CSJ: 0014-16-255							
		814	163	94	280	1	174
	Supplemental ITS Items						
	CSJ: 0014-16-255 TOTAL	**814**	**163**	**94**	**280**	**1**	**174**
	PROJECT TOTAL	**814**	**163**	**94**	**280**	**1**	**174**

NOTE: SUPPLEMENTAL ITS ITEMS LISTED ARE FOR CONTRACTOR BIDDING PURPOSES ONLY AND SHALL NOT BE CONSTRUCTED WITHOUT TXDOT AUTHORIZATION. DESIGN FOR THESE ITEMS ARE NOT INCLUDED IN THIS PACKAGE.

IH35W_3B_TBL
S3B_KCI_Half(PS-PDF).plt
DRAWING DATE: 8/21/2012

kevin.currykosky
FILENAME: S3BPITSSUM05.dgn

Kimley-Horn and Associates, Inc.
TEXAS REGISTERED ENGINEERING FIRM F-928

Texas Department of Transportation
© 2012

IH 35W FROM NORTH TARRANT PKWY TO IH 820

ITS SUMMARY

SHEET 5 OF 6

DESIGN	FED.RD. DIV.NO.	FEDERAL AID PROJECT NO.		HIGHWAY NO.
KHA	6	(SEE TITLE SHEET)		IH 35W
GRAPHICS KHA	STATE	DISTRICT	COUNTY	SHEET NO.
CHECK KHA	TEXAS	FTW	TARRANT	148
CHECK	CONTROL	SECTION	JOB	
KHA	0014	16	255, ETC.	

ELECTRICAL SERVICES SUMMARY SHEET

Elec. Service No.	Sheet No.	Electrical Service Description (see ED (4) - 03)	Service Conduit Size	Service Conductors No./Size	Safety Switch Amps	Main Ckt. Bkr. Pole/Amp	Two-Pole Contactor Amps	Panelbd/ Loadcenter Amp Rating	Circuit No.	Branch Ckt. Bkr. Pole/Amps	Branch Circuit Amps	KVA Load	Circuit Size Circuit / Ground
PS-35W-01	2110	ELEC SERV TY D(120/240)100(NS)SS(N)GC(O)	1 1/2"	3/#2	N/A	2P/100	N/A	100	ATRDMS	2P/50	40	9.6	(3) No. 6 Insulated /(1) No. 6 Bare
PS-35W-02	2112	ELEC SERV TY D(120/240)100(NS)SS(N)GC(O)	1 1/2"	3/#2	N/A	2P/100	N/A	100	CCTV	1P/40	30	6.7	(2) No. 2 Insulated /(1) No. 2 Bare
									MVD	1P/40	26		(2) No. 1/0 Insulated /(1) No. 1/0 Bare
PS-35W-03	2113	ELEC SERV TY D(120/240)200(NS)SS(N)GC(O)	2"	3/#0	N/A	2P/200	N/A	225	TOLL #1	2P/125	100	48.0	(3) No. 3/0 Insulated /(1) No. 1/0 Bare
									TOLL #1	2P/125	100		(3) No. 3/0 Insulated /(1) No. 1/0 Bare
PS-35W-04	2113	ELEC SERV TY D(120/240)100(NS)SS(N)GC(O)	1 1/2"	3/#2	N/A	2P/100	N/A	100	MVD	1P/40	26	6.2	(2) No. 6 Insulated /(1) No. 6 Bare
									MVD	1P/40	26		(2) No. 2 Insulated /(1) No. 2 Bare
PS-35W-05	2116	ELEC SERV TY D(120/240)100(NS)SS(N)GC(O)	1 1/2"	3/#2	N/A	2P/100	N/A	100	MVD	1P/40	26	3.1	(2) No. 1/0 Insulated /(1) No. 1/0 Bare
PS-35W-06	2119	ELEC SERV TY D(120/240)200(NS)SS(N)GC(O)	2"	3/#0	N/A	2P/200	N/A	225	TOLL #2	2P/125	100	48.0	(3) No. 350KCMIL Insulated /(1) No. 2/0 Bare
									TOLL #2	2P/125	100		(3) No. 350KCMIL Insulated /(1) No. 2/0 Bare
PS-35W-07	2119	ELEC SERV TY D(120/240)200(NS)SS(N)GC(O)	2"	3/#0	N/A	2P/200	N/A	225	SAT	2P/125	100	48.0	(3) No. 3/0 Insulated /(1) No. 1/0 Bare
									SAT	2P/125	100		(3) No. 3/0 Insulated /(1) No. 1/0 Bare
PS-35W-08	2119	ELEC SERV TY D(120/240)125(NS)SS(N)GC(O)	2"	3/#0	N/A	2P/125	N/A	125	MVD	1P/30	26	10.9	(2) No. 2 Insulated /(1) No. 2 Bare
									WEATHER	1P/20	15		(2) No. 6 Insulated /(1) No. 6 Bare
									CCTV	1P/40	30		(2) No. 2/0 Insulated /(1) No. 2/0 Bare
									MVD	1P/30	20		(2) No. 2 Insulated /(1) No. 2 Bare
PS-35W-09	2120	ELEC SERV TY D(120/240)100(NS)SS(N)GC(O)	1 1/2"	3/#2	N/A	2P/100	N/A	100	MVD	1P/40	30	3.6	(2) No. 4 Insulated /(1) No. 4 Bare
PS-35W-10	2122	ELEC SERV TY D(120/240)200(NS)SS(N)GC(O)	2"	3/#0	N/A	2P/200	N/A	225	MVD	1P/40	26	16.3	(2) No. 1 Insulated /(1) No. 1 Bare
									SDMS	2P/50	35		(3) No. 4 Insulated /(1) No. 4 Bare
									MVD	1P/30	20		(2) No. 4 Insulated /(1) No. 4 Bare
									MVD	1P/30	20		(2) No. 4 Insulated /(1) No. 4 Bare
PS-35W-11	2124	ELEC SERV TY D(120/240)200(NS)SS(N)GC(O)	2"	3/#0	N/A	2P/200	N/A	225	ATRDMS	2P/50	35	43.2	(3) No. 4 Insulated /(1) No. 4 Bare
									EX. DMS	2P/90	65		(3) No. 3/0 Insulated /(1) No. 4 Bare
									DMS CAB.	2P/90	65		(3) No. 3/0 Insulated /(1) No. 4 Bare
									CCTV	1P/40	30		(2) No. 4 Insulated /(1) No. 4 Bare
PS-35W-12	2125	ELEC SERV TY D(120/240)175(NS)SS(N)GC(U)	2"	3/#0	N/A	2P/175	N/A	225	DMS CAB.	2P/90	65	31.2	(3) No. 2 Insulated /(1) No. 2 Bare
									EX. DMS	2P/90	65		(3) No. 1/0 Insulated /(1) No. 1/0 Bare
PS-35W-13	2126	ELEC SERV TY D(120/240)200(NS)SS(N)GC(U)	2"	3/#0	N/A	2P/200	N/A	225	TOLL #3	2P/125	100	48.0	(3) No. 3/0 Insulated /(1) No. 1/0 Bare
									TOLL #3	2P/125	100		(3) No. 3/0 Insulated /(1) No. 1/0 Bare
PS-35W-14	2128	ELEC SERV TY D(120/240)200(NS)SS(N)GC(O)	2"	3/#0	N/A	2P/200	N/A	225	MVD	1P/30	20	18.0	(2) No. 1/0 Insulated /(1) No. 1/0 Bare
									SDMS	2P/50	35		(3) No. 2 Insulated /(1) No. 2 Bare
									MVD	1P/30	20		(2) No. 2 Insulated /(1) No. 2 Bare
									MVD	1P/30	20		(2) No. 2 Insulated /(1) No. 2 Bare
									MVD	1P/30	20		(2) No. 1 Insulated /(1) No. 1 Bare
PS-35W-15	2130	ELEC SERV TY D(120/240)100(NS)SS(N)GC(U)	1 1/2"	3/#2	N/A	2P/100	N/A	100	CCTV	1P/40	30	8.4	(2) No. 4 Insulated /(1) No. 4 Bare
									MVD	1P/30	20		(2) No. 2 Insulated /(1) No. 2 Bare
									MVD	1P/30	20		(2) No. 1 Insulated /(1) No. 1 Bare
PS-35W-16	2131	ELEC SERV TY D(120/240)150(NS)SS(N)GC(U)	2"	3/#0	N/A	2P/150	N/A	225	MVD	1P/40	26	18.7	(2) No. 1 Insulated /(1) No. 1 Bare
									DMS CAB.	2P/90	65		(3) No. 4 Insulated /(1) No. 4 Bare
PS-35W-17	2132	ELEC SERV TY D(120/240)150(NS)SS(N)GC(U)	2"	3/#0	N/A	2P/150	N/A	225	SDMS	2P/50	35	16.3	(3) No. 1 Insulated /(1) No. 1 Bare
									MVD	1P/40	26		(2) No. 2 Insulated /(1) No. 2 Bare
									MVD	1P/40	20		(2) No. 2/0 Insulated /(1) No. 2/0 Bare
									MVD	1P/40	20		(2) No. 2/0 Insulated /(1) No. 2/0 Bare
PS-35W-18	2132	ELEC SERV TY D(120/240)200(NS)SS(N)GC(U)	2"	3/#0	N/A	2P/200	N/A	225	TOLL #4	2P/125	100	48.0	(3) No. 3/0 Insulated /(1) No. 1/0 Bare
									TOLL #4	2P/125	100		(3) No. 3/0 Insulated /(1) No. 1/0 Bare
PS-35W-19	2135	ELEC SERV TY D(120/240)100(NS)SS(N)GC(U)	1 1/2"	3/#2	N/A	2P/100	N/A	100	MVD	1P/30	20	6.0	(2) No. 1/0 Insulated /(1) No. 1/0 Bare
									CCTV	1P/40	30		(2) No. 1 Insulated /(1) No. 1 Bare
PS-35W-20	2136	ELEC SERV TY D(120/240)100(NS)SS(N)GC(O)	1 1/2"	3/#2	N/A	2P/100	N/A	100	CCTV	1P/40	30	12.0	(2) No. 4 Insulated /(1) No. 4 Bare
									ATRDMS	2P/50	35		(3) No. 4 Insulated /(1) No. 4 Bare
PS-35W-21	2128	EXISTING SERVICE TO BE REUSED											
PS-35W-22	2129	ELEC SERV TY D(120/240)100(NS)SS(N)GC(O)	1 1/2"	3/#2	N/A	2P/100	N/A	100	MVD	1P/40	30	3.6	(2) No. 6 Insulated /(1) No. 6 Bare

Kimley-Horn and Associates, Inc.
TEXAS REGISTERED ENGINEERING FIRM F-928

Texas Department of Transportation
© 2012

IH 35W FROM NORTH TARRANT PKWY TO IH 820

ITS SUMMARY

SHEET 6 OF 6

DESIGN	FED. RD. DIV. NO.	FEDERAL AID PROJECT NO.		HIGHWAY NO.
KHA	6	(SEE TITLE SHEET)		IH 35W
GRAPHICS	STATE	DISTRICT	COUNTY	SHEET NO.
KHA	TEXAS	FTW	TARRANT	149
CHECK	CONTROL	SECTION	JOB	
KHA	0014	16	255, ETC.	
CHECK				
KHA				

kevin.currykosky
FILENAME: S3BPITSSUM06.dgn

IH35W_3B.TBL
S3B_KCI_Half(PS-PDF).plt
DRAWING DATE: 8/21/2012

SUMMARY OF TRAFFIC SIGNAL ITEMS

		416 2031	416 2032	618 2018	618 2022	618 2023	618 2024	618 2025	618 2052	618 2056	620 2009
		DRILL SHAFT (TRF SIG POLE) (30 IN)	DRILL SHAFT (TRF SIG POLE) (36 IN)	CONDT (PVC) (SCHD 40) (2")	CONDT (PVC) (SCHD 40) (3")	CONDT (PVC) (SCHD 40) (3") (BORE)	CONDT (PVC) (SCHD 40) (4")	CONDT (PVC) (SCHD 40) (4") (BORE)	CONDT (RM) (2")	CONDT (RM) (3")	ELEC CONDR (NO. 6) BARE
		LF	LF	LF	LF	LF	LF	LF	LF	LF	LF
CSJ: 0081-12-045											
	CSJ: 0081-12-045 TOTAL	**0**	**0**	**0**	**0**	**0**	**0**	**0**	**0**	**0**	**0**
CSJ: 0014-16-255											
	IH 35W & BASSWOOD BLVD	0	40	65	230	445					880
	IH 35W & WESTERN CENTER BLVD	23	53	255	225	485	410	170	190	30	1,640
	CSJ: 0014-16-255 TOTAL	**23**	**93**	**320**	**455**	**930**	**410**	**170**	**190**	**30**	**2,520**
PROJECT TOTAL		**23**	**93**	**320**	**455**	**930**	**410**	**170**	**190**	**30**	**2,520**

SUMMARY OF TRAFFIC SIGNAL ITEMS PROVIDED BY THE CITY OF FORT WORTH

		TRAFFIC SIGNAL CONTROLLER AND CABINET ASSEMBLY (TYPE 170)	FURNISH AND INSTALL OPTICOM DETECTORS	FURNISH AND INSTALL OPTICOM CABLE	REMOVAL OF CITY RED LIGHT ENFORCEMENT EQUIPMENT
		EA	EA	LF	EA
CSJ: 0081-12-045					
	CSJ: 0081-12-045 TOTAL	**0**	**0**	**0**	**0**
CSJ: 0014-16-255					
	IH 35W & BASSWOOD BLVD	1	6	610	0
	IH 35W & WESTERN CENTER BLVD	1	4	4,140	2
	CSJ: 0014-16-255 TOTAL	**2**	**10**	**4,750**	**2**
PROJECT TOTAL		**2**	**10**	**4,750**	**2**

CONTRACTOR TO INSTALL CITY PROVIDED CONTROLLER AND CABINET ASSEMBLY. THE CITY OF FORT WORTH WILL PROVIDE AND PAY FOR OPTICOM EQUIPMENT AND INSTALLATION OF OPTICOM EQUIPMENT. ADDITIONALLY, THE CITY OF FORT WORTH WILL REMOVE RED LIGHT ENFORCEMENT EQUIPMENT.

Kimley-Horn and Associates, Inc.
TEXAS REGISTERED ENGINEERING FIRM F-928

Texas Department of Transportation
© 2012

IH 35W FROM NORTH TARRANT PKWY TO IH 820

TRAFFIC SIGNAL SUMMARY

SHEET 1 OF 5

DESIGN	FED.RD. DIV.NO.	FEDERAL AID PROJECT NO.		HIGHWAY NO.
KHA	6	(SEE TITLE SHEET)		IH 35W
GRAPHICS	STATE	DISTRICT	COUNTY	SHEET NO.
KHA	TEXAS	FTW	TARRANT	150
CHECK	CONTROL	SECTION	JOB	
KHA	0014	16	255, ETC.	
CHECK				
KHA				

IH35W_3B.tbl
S3B_KCI_Half(PS-PDF).plt
DRAWING DATE: 9/5/2012
daniel.rejcek
FILENAME: S3BPSGNLSUM01.dgn

SUMMARY OF TRAFFIC SIGNAL ITEMS

		620 2010	621 2004	624 2014	628 2144	636 2001	680 2002	681 2001	682 2001	682 2003	682 2022
		ELEC CONDR (NO. 6) INSULATED	TRAY CABLE (4 CONDR) (12 AWG)	GROUND BOX TY D (162922) W/APPRON	ELC SRV TY T 120 / 240 000 (NS) GS (L) TP (O	ALUMINUM SIGNS (TY A)	INSTALL HWY TRF SIG (ISOLATED)	TEMP TRAF SIGNALS	BACK PLATE (12 IN) (3 SEC)	BACK PLATE (12 IN) (5 SEC)	VEH SIG SEC (12 IN) LED (GRN ARW)
		LF	LF	EA	EA	SF	EA	EA	EA	EA	EA
CSJ: 0081-12-045											
	CSJ: 0081-12-045 TOTAL	**0**	**0**	**0**	**0**	**0**	**0**	**0**	**0**	**0**	**0**
CSJ: 0014-16-255											
	IH 35W & BASSWOOD BLVD	60	390	6		53	1		11		2
	IH 35W & WESTERN CENTER BLVD	330	2,830	11	1	60	1	2	29	4	4
	CSJ: 0014-16-255 TOTAL	**390**	**3,220**	**17**	**1**	**113**	**2**	**2**	**40**	**4**	**6**
PROJECT TOTAL		**390**	**3,220**	**17**	**1**	**113**	**2**	**2**	**40**	**4**	**6**

IH35W_3B.tbl
S3B_KCI_Half(PS-PDF).plt
DRAWING DATE: 9/5/2012

daniel.rejcek
FILENAME: S3BPSGNLSUMO2.dgn

Kimley-Horn and Associates, Inc.
TEXAS REGISTERED ENGINEERING FIRM F-928

Texas Department of Transportation
© 2012

IH 35W FROM NORTH TARRANT PKWY TO IH 820

TRAFFIC SIGNAL SUMMARY

SHEET 2 OF 5

DESIGN	FED.RD. DIV.NO.	FEDERAL AID PROJECT NO.		HIGHWAY NO.
KHA	6	(SEE TITLE SHEET)		IH 35W
GRAPHICS	STATE	DISTRICT	COUNTY	SHEET NO.
KHA	TEXAS	FTW	TARRANT	151
CHECK	CONTROL	SECTION	JOB	
KHA	0014	16	255, ETC.	

SUMMARY OF TRAFFIC SIGNAL ITEMS

		682 2023	682 2024	682 2025	682 2027	684 2031	684 2033	684 2036	684 2042	686 2031	686 2039
		VEH SIG SEC (12 IN) LED (GRN)	VEH SIG SEC (12 IN) LED (YEL ARW)	VEH SIG SEC (12 IN) LED (YEL)	VEH SIG SEC (12 IN) LED (RED)	TRF SIG CBL (TY A) (14 AWG) (5 CONDR)	TRF SIG CBL (TY A) (14 AWG) (7 CONDR)	TRF SIG CBL (TY A) (14 AWG) (10 CONDR)	TRF SIG CBL (TY A) (14 AWG) (16 CONDR)	INS TRF SIG PL AM (S) 1 ARM (32')	INS TRF SIG PL AM (S) 1 ARM (40')
		EA	EA	EA	EA	LF	LF	LF	LF	EA	EA
CSJ: 0081-12-045											
	CSJ: 0081-12-045 TOTAL	0	0	0	0	0	0	0	0	0	0
CSJ: 0014-16-255											
	IH 35W & BASSWOOD BLVD	9	2	9	11	735		845	435		1
	IH 35W & WESTERN CENTER BLVD	33	4	33	33	2,120	365	2,325	2,675	2	
	CSJ: 0014-16-255 TOTAL	42	6	42	44	2,855	365	3,170	3,110	2	1
PROJECT TOTAL		42	6	42	44	2,855	365	3,170	3,110	2	1

Kimley-Horn and Associates, Inc.
TEXAS REGISTERED ENGINEERING FIRM F-928

Texas Department of Transportation
© 2012

IH 35W FROM NORTH TARRANT PKWY TO IH 820

TRAFFIC SIGNAL SUMMARY

SHEET 3 OF 5

DESIGN	FED. RD. DIV. NO.	FEDERAL AID PROJECT NO.		HIGHWAY NO.
KHA	6	(SEE TITLE SHEET)		IH 35W
GRAPHICS KHA	STATE	DISTRICT	COUNTY	SHEET NO.
CHECK KHA	TEXAS	FTW	TARRANT	152
CHECK	CONTROL	SECTION	JOB	
KHA	0014	16	255, ETC.	

IH35W_3B.tbl
S3B_KCI_Half(PS-PDF).pl+
DRAWING DATE: 7/13/2012
daniel.rejcek
FILENAME: S3BPSGNLSUM03.dgn

SUMMARY OF TRAFFIC SIGNAL ITEMS

		686 2041	686 2045	686 2049	687 2001	690 2009	6007 2001	6266 2001	6266 2002	6266 2003	6266 2005
		INS TRF SIG PL AM (S) 1 ARM (40') LUM	INS TRF SIG PL AM (S) 1 ARM (44') LUM	INS TRF SIG PL AM (S) 1 ARM (48') LUM	PED POLE ASSEMBLY	REMOVAL OF CABLES	REMOVING TRAFFIC SIGNALS	VIVDS PROCESSOR SYSTEM	VIVDS CAMERA ASSEMBLY	VIVDS SET-UP SYSTEM	VIVDS COMMUNICATION CABLE (COAXIAL)
		EA	EA	EA	EA	LF	EA	EA	EA	EA	LF
CSJ: 0081-12-045											
	CSJ: 0081-12-045 TOTAL	0	0	0	0	0	0	0	0	0	0
CSJ: 0014-16-255											
	IH 35W & BASSWOOD BLVD	1	1		9	650	1			1	610
	IH 35W & WESTERN CENTER BLVD	1	1	2	6		1	2	6	2	4,140
	CSJ: 0014-16-255 TOTAL	2	2	2	15	650	2	2	6	3	4,750
	PROJECT TOTAL	2	2	2	15	650	2	2	6	3	4,750

Kimley-Horn and Associates, Inc.
TEXAS REGISTERED ENGINEERING FIRM F-928

Texas Department of Transportation
© 2012

IH 35W FROM NORTH TARRANT PKWY TO IH 820

TRAFFIC SIGNAL SUMMARY

SHEET 4 OF 5

DESIGN	FED. RD. DIV. NO.	FEDERAL AID PROJECT NO.		HIGHWAY NO.
KHA	6	(SEE TITLE SHEET)		IH 35W
GRAPHICS KHA	STATE	DISTRICT	COUNTY	SHEET NO.
CHECK KHA	TEXAS	FTW	TARRANT	153
CHECK KHA	CONTROL	SECTION	JOB	
	0014	16	255, ETC.	

IH35W_3B.tbl
S3B_KCI_Half(PS-PDF).plt
DRAWING DATE: 7/13/2012

daniel.rejcek
FILENAME: S3BPSGNLSUM04.dgn

SUMMARY OF TRAFFIC SIGNAL ITEMS

		6266 2009	6266 2014	8260 2002	8368 2003	8368 2008	8835 2001
		VIVDS CAMERA SYS (INSTALLATION ONLY)	VIVDS PROCESSOR ASSEM (INSTALL ONLY)	LED COUNTDOWN PED SIGNAL MOD W/ HOUSING	CONDUIT (PREPARE)	GROUND BOX (PREPARE)	ACCESSIBLE PEDESTRIAN SIGNAL UNITS
		EA	EA	EA	LF	EA	EA
CSJ: 0081-12-045							
	CSJ: 0081-12-045 TOTAL	0	0	0	0	0	0
CSJ: 0014-16-255							
	IH 35W & BASSWOOD BLVD	3	1	16	1,000	6	16
	IH 35W & WESTERN CENTER BLVD	3		14		2	14
	CSJ: 0014-16-255 TOTAL	6	1	30	1,000	8	30
	PROJECT TOTAL	6	1	30	1,000	8	30

daniel.rejcek
FILENAME: S3BPSGNLSUM05.dgn

IH35W_3B.tbl
S3B_KCI_Half(PS-PDF).plt
DRAWING DATE: 7/13/2012

Kimley-Horn and Associates, Inc.
TEXAS REGISTERED ENGINEERING FIRM F-928

Texas Department of Transportation
© 2012

IH 35W FROM NORTH TARRANT PKWY TO IH 820

TRAFFIC SIGNAL SUMMARY

SHEET 5 OF 5

DESIGN	FED. RD. DIV. NO.	FEDERAL AID PROJECT NO.		HIGHWAY NO.
KHA	6	(SEE TITLE SHEET)		IH 35W
GRAPHICS KHA	STATE	DISTRICT	COUNTY	SHEET NO.
CHECK KHA	TEXAS	FTW	TARRANT	154
CHECK	CONTROL	SECTION	JOB	
KHA	0014	16	255, ETC.	

SUMMARY OF UTILITY ITEMS

		2053-2001	2053-2002	2053-2003	2053-2004	2053-2005	2053-2006	2053-2007
		WATER LINE GROUTING	6" WATER ABANDONMENT PLUG	8" WATER ABANDONMENT PLUG	12" WATER ABANDONMENT PLUG	24" WATER ABANDONMENT PLUG	REMOVE 6" WATER VALVE	REMOVE 8" WATER VALVE
		CY	EA	EA	EA	EA	EA	EA
CSJ: 0014-16-267								
		135	2	1	4	7	2	1
	CSJ: 0014-16-267 TOTAL	**135**	**2**	**1**	**4**	**7**	**2**	**1**
	PROJECT TOTAL	**135**	**2**	**1**	**4**	**7**	**2**	**1**

SUMMARY OF UTILITY ITEMS

		2053-2008	2053-2009	2053-2010	2053-2011	2053-2012	2053-2013	2053-2014
		REMOVE 12" WATER VALVE	SALVAGE FIRE HYDRANT	SALVAGE 1" WATER METER	SALVAGE 1-1/2" WATER METER	SALVAGE 2" WATER METER	SALVAGE WATER SAMPLING STATION	REMOVE CONCRETE WATER VAULT
		EA	EA	EA	EA	EA	EA	EA
CSJ: 0014-16-267								
		1	2	1	3	4	1	5
	CSJ: 0014-16-267 TOTAL	**1**	**2**	**1**	**3**	**4**	**1**	**5**
	PROJECT TOTAL	**1**	**2**	**1**	**3**	**4**	**1**	**5**

SUMMARY OF UTILITY ITEMS

		2053-2015	2053-2016	2053-2017	2053-2018	2053-2019	2053-2020	2053-2021
		SANITARY LINE GROUTING	10" SEWER ABANDONMENT PLUG	36" SEWER ABANDONMENT PLUG	42" SEWER ABANDONMENT PLUG	REMOVE 4' SEWER MANHOLE	REMOVE 5' SEWER MANHOLE	REMOVE SEWER JUNCTION STRUCTURE
		CY	EA	EA	EA	EA	EA	LS
CSJ: 0014-16-267								
		240	1	1	1	6	3	1
	CSJ: 0014-16-267 TOTAL	**240**	**1**	**1**	**1**	**6**	**3**	**1**
	PROJECT TOTAL	**240**	**1**	**1**	**1**	**6**	**3**	**1**

Kimley-Horn and Associates, Inc.
TEXAS REGISTERED ENGINEERING FIRM F-928

Texas Department of Transportation
© 2012

IH 35W FROM NORTH TARRANT PKWY TO IH 820

IH 35W UTILITY RELOCATIONS

UTILITY SUMMARY

SHEET 1 OF 5

DESIGN	FED. RD. DIV. NO.	FEDERAL AID PROJECT NO.		HIGHWAY NO.
KHA	6	(SEE TITLE SHEET)		IH 35W
GRAPHICS KHA	STATE	DISTRICT	COUNTY	SHEET NO.
CHECK KHA	TEXAS	FTW	TARRANT	155
CHECK	CONTROL	SECTION	JOB	
KHA	0014	16	255, ETC.	

FILENAME: S3BPUTIL*QUANTITY*01.dgn

DRAWING DATE: 7/13/2012

SUMMARY OF UTILITY ITEMS

		2053-2022	2053-2023	2053-2024	2053-2025	2053-2026	2053-2027	2053-2028
		SWPPP ≥ 1 ACRE	TEMPORARY ASPHALT PAVING REPAIR	6" CONCRETE PAVING REPAIR	11" CONCRETE PAVING REPAIR	4" CONCRETE SIDEWALK	7" CONCRETE DRIVEWAY	7" CONCRETE CURB AND GUTTER
		LS	LF	SY	SY	SF	SF	LF
CSJ: 0014-16-267								
		1	180	490	510	200	815	560
	CSJ: 0014-16-267 TOTAL	**1**	**180**	**490**	**510**	**200**	**815**	**560**
	PROJECT TOTAL	**1**	**180**	**490**	**510**	**200**	**815**	**560**

SUMMARY OF UTILITY ITEMS

		2053-2029	2053-2030	2053-2032	2053-2033	2053-2034	2053-2035	2053-2036
		4" SOLID PAVEMENT MARKING PAINT (Y)	RAISED MARKER, TYPE W	SEEDING, HYDROMULCH	PRE-CCTV INSPECTION	POST-CCTV INSPECTION	MANHOLE VACUUM TESTING	BYPASS PUMPING
		LF	EA	SY	LF	LF	EA	LS
CSJ: 0014-16-267								
		110	40	3200	2530	1267	8	1
	CSJ: 0014-16-267 TOTAL	**110**	**40**	**3200**	**2530**	**1267**	**8**	**1**
	PROJECT TOTAL	**110**	**40**	**3200**	**2530**	**1267**	**8**	**1**

SUMMARY OF UTILITY ITEMS

		2053-2038	2053-2039	2053-2040	2053-2041	2053-2044	2053-2045	2053-2047
		EXPLORATORY EXCAVATION OF EXISTING UTILITIES	TRENCH SAFETY	UTILITY MARKERS	CONCRETE COLLAR	24" CASING BY OTHER THAN OPEN CUT	42" CASING BY OTHER THAN OPEN CUT	60" CASING/TUNNEL LINER PLATE BY OTHER THAN OPEN CUT
		EA	LF	LS	EA	LF	LF	LF
CSJ: 0014-16-267								
		5	1737	1	8	245	575	744
	CSJ: 0014-16-267 TOTAL	**5**	**1737**	**1**	**8**	**245**	**575**	**744**
PROJECT TOTAL		**5**	**1737**	**1**	**8**	**245**	**575**	**744**

Kimley-Horn and Associates, Inc.
TEXAS REGISTERED ENGINEERING FIRM F-928

Texas Department of Transportation
© 2012

IH 35W FROM NORTH TARRANT PKWY TO IH 820

IH 35W UTILITY RELOCATIONS

UTILITY SUMMARY

SHEET 2 OF 5

DESIGN	FED. RD. DIV. NO.	FEDERAL AID PROJECT NO.		HIGHWAY NO.
KHA	6	(SEE TITLE SHEET)		IH 35W
GRAPHICS KHA	STATE	DISTRICT	COUNTY	SHEET NO.
CHECK KHA	TEXAS	FTW	TARRANT	156
CHECK	CONTROL	SECTION	JOB	
KHA	0014	16	255, ETC.	

FILENAME: S3BPUTIL*QUANTITY*02.dgn

DRAWING DATE: 7/13/2012

SUMMARY OF UTILITY ITEMS

		2053-2048	2053-2049	2053-2051	2053-2052	2053-2053	2053-2054	2053-2055
		12" WATER CARRIER PIPE	24" WATER CARRIER PIPE	42" SEWER CARRIER PIPE	DUCTILE IRON WATER FITTINGS	C303 FITTINGS	HYDROCARBON RESISTANT GASKETS	6" DIP WATER
		LF	LF	LF	TON	LS	LS	LF
CSJ: 0014-16-267								
		245	575	744	12	1	1	20
	CSJ: 0014-16-267 TOTAL	**245**	**575**	**744**	**12**	**1**	**1**	**20**
PROJECT TOTAL		**245**	**575**	**744**	**12**	**1**	**1**	**20**

SUMMARY OF UTILITY ITEMS

		2053-2059	2053-2061	2053-2062	2053-2063	2053-2064	2053-2065	2053-2066
		12" DIP WATER	24" WATER PIPE	FIRE HYDRANT	WATER SAMPLING STATION	CONNECT TO EXISTING 10" WATER MAIN	CONNECT TO EXISTING 12" WATER MAIN	CONNECT TO EXISTING 24" WATER MAIN
		LF	LF	EA	EA	EA	EA	EA
CSJ: 0014-16-267								
		906	288	2	1	1	1	2
	CSJ: 0014-16-267 TOTAL	**906**	**288**	**2**	**1**	**1**	**1**	**2**
PROJECT TOTAL		**906**	**288**	**2**	**1**	**1**	**1**	**2**

FILENAME: S3BPUTIL*QUANTITY*03.dgn

DRAWING DATE: 7/13/2012

Kimley-Horn and Associates, Inc.
TEXAS REGISTERED ENGINEERING FIRM F-928

Texas Department of Transportation
© 2012

IH 35W FROM NORTH TARRANT PKWY TO IH 820

IH 35W UTILITY RELOCATIONS

UTILITY SUMMARY

SHEET 3 OF 5

DESIGN	FED.RD. DIV.NO.	FEDERAL AID PROJECT NO.		HIGHWAY NO.
KHA	6	(SEE TITLE SHEET)		IH 35W
GRAPHICS KHA	STATE	DISTRICT	COUNTY	SHEET NO.
CHECK KHA	TEXAS	FTW	TARRANT	157
CHECK KHA	CONTROL	SECTION	JOB	
	0014	16	255, ETC.	

SUMMARY OF UTILITY ITEMS

		2053-2069	2053-2070	2053-2071	2053-2072	2053-2073	2053-2074	2053-2075
		1" WATER SERVICE, METER RELOCATION	1" WATER SERVICE	1" PRIVATE SERVICE	1-1/2" WATER SERVICE, METER RELOCATION	1-1/2" WATER SERVICE	1-1/2" PRIVATE SERVICE	2" WATER SERVICE, METER RELOCATION
		EA	EA	LF	EA	EA	LF	EA
CSJ: 0014-16-267								
		1	1	90	3	3	110	4
	CSJ: 0014-16-267 TOTAL	**1**	**1**	**90**	**3**	**3**	**110**	**4**
	PROJECT TOTAL	**1**	**1**	**90**	**3**	**3**	**110**	**4**

SUMMARY OF UTILITY ITEMS

		2053-2076	2053-2077	2053-2079	2053-2081	2053-2082	2053-2084	2053-2085
		2" WATER SERVICE	2" PRIVATE SERVICE	6" GATE VALVE	12" GATE VALVE	24" GATE VALVE AND VAULT	6" SEWER SERVICE	12" DIP SEWER
		EA	LF	EA	EA	EA	EA	EA
CSJ: 0014-16-267								
		4	140	2	2	3	1	394
	CSJ: 0014-16-267 TOTAL	**4**	**140**	**2**	**2**	**3**	**1**	**394**
	PROJECT TOTAL	**4**	**140**	**2**	**2**	**3**	**1**	**394**

FILENAME: S3BPUTIL*QUANTITY*04.dgn

DRAWING DATE: 7/13/2012

Kimley-Horn and Associates, Inc.
TEXAS REGISTERED ENGINEERING FIRM F-928

Texas Department of Transportation
© 2012

IH 35W FROM NORTH TARRANT PKWY TO IH 820

IH 35W UTILITY RELOCATIONS

UTILITY SUMMARY

SHEET 4 OF 5

DESIGN	FED. RD. DIV. NO.	FEDERAL AID PROJECT NO.		HIGHWAY NO.
KHA	6	(SEE TITLE SHEET)		IH 35W
GRAPHICS	STATE	DISTRICT	COUNTY	SHEET NO.
KHA	TEXAS	FTW	TARRANT	158
CHECK	CONTROL	SECTION	JOB	
KHA	0014	16	255, ETC.	

SUMMARY OF UTILITY ITEMS

		2053-2087	2053-2088	2053-2089	2053-2090	2053-2091	2053-2092	2053-2093
		42" FIBERGLASS SEWER PIPE	EPOXY MANHOLE LINER	4' MANHOLE	4' EXTRA DEPTH MANHOLE	5' EXTRA DEPTH MANHOLE	5' TYPE A MANHOLE	5' FIBERGLASS TYPE A MANHOLE
		LF	VF	EA	VF	VF	EA	EA
CSJ: 0014-16-267								
		129	179	3	43	54	2	1
	CSJ: 0014-16-267 TOTAL	**129**	**179**	**3**	**43**	**54**	**2**	**1**
PROJECT TOTAL		**129**	**179**	**3**	**43**	**54**	**2**	**1**

SUMMARY OF UTILITY ITEMS

		2053-2095	2053-2096					
		SANITARY SEWER JUNCTION STRUCTURE	TRAFFIC CONTROL					
		LS	MO					
CSJ: 0014-16-267								
		2	5					
	CSJ: 0014-16-267 TOTAL	**2**	**5**					
PROJECT TOTAL		**2**	**5**					

FILENAME: S3BPUTIL*QUANTITY*05.dgn

DRAWING DATE: 7/13/2012

Kimley-Horn and Associates, Inc.
TEXAS REGISTERED ENGINEERING FIRM F-928

Texas Department of Transportation
© 2012

IH 35W FROM NORTH TARRANT PKWY TO IH 820

IH 35W UTILITY RELOCATIONS

UTILITY SUMMARY

SHEET 5 OF 5

DESIGN	FED. RD. DIV. NO.	FEDERAL AID PROJECT NO.		HIGHWAY NO.
KHA	6	(SEE TITLE SHEET)		IH 35W
GRAPHICS KHA	STATE	DISTRICT	COUNTY	SHEET NO.
CHECK KHA	TEXAS	FTW	TARRANT	159
CHECK	CONTROL	SECTION	JOB	
KHA	0014	16	255, ETC.	

DATE: 7/13/2012 1:47:26 PM
FILE: S3BSIGNSSUM00.dgn

DISCLAIMER: The use of this standard is governed by the "Texas Engineering Practice Act". No warranty of any kind is made by TxDOT for any purpose whatsoever. TxDOT assumes no responsibility for the conversion of this standard to other formats or for incorrect results or damages resulting from its use.

SUMMARY OF SMALL SIGNS

SM RD SGN ASSM TY XXXXX(X)XX(X-XXXX)

Post Type: FRP = Fiberglass; TWT = Thin-Wall; 10BWG = 10 BWG; S80 = Sch 80

Posts (1 or 2)

Anchor Type: UA=Univer-Conc; UB=Univer-Bolt; SA=Slip-Conc; SB=Slip-Bolt; WS=Wedge Steel; WP=Wedge Plastic

Mounting Designation: P = Prefab. "Plain"; T = Prefab. "T"; U = Prefab. "U"; 1EXT or 2EXT = # of Ext.; BM = Extruded Wind Beam; WC = 1.12 #/ft Wing Chan.; EXAL= Extruded Aluminum

PLAN SHEET NO.	SIGN NO.	SIGN NOMENCLATURE	SIGN TEXT	DIMENSIONS	ALUMINUM TYPE A	ALUMINUM TYPE G	Post Type	Posts (1 or 2)	Anchor Type	Mounting Designation	
1	1	R2-1	SPEED LIMIT XX	48'' X 60''	a		S80	1	SA	T	
	2	W12-2	1 X' - X"	48'' X 48''	a		S80	1	SA	T	
		M4-15	TOLL	36'' X 18''	a						
	3	M3-3B	SOUTH	24'' X 12''	a		TWT	1	WS	P	
		M1-1	INTERSTATE 35W	30'' X 24''	a						
		M6-2BL	LEFT 45° SLANTED ARROW	21'' X 15''	a						
2	1	R5-1	DO NOT ENTER	48'' X 48''	a		10 BWG	1	SA	T	
	2	R5-1	DO NOT ENTER	48'' X 48''	a		10 BWG	1	SA	T	
	3	R5-1A	WRONG WAY	42'' X 30''	a		TWT	1	WS	T	
	4	R5-1A	WRONG WAY	42'' X 30''	a		TWT	1	WS	T	
	5	R2-1	SPEED LIMIT XX	48'' X 60''	a		S80	1	SA	T	
	6	W9-2R	LANE ENDS MERGE RIGHT	48'' X 48''	a		10 BWG	1	SA	T	
	7	M4-15	TOLL	60'' X 12''		a	S80	2	SA	P	
		E5-1C	EXIT GORE	60'' X 90''		a					
			62			a					
	8	W4-3R	ADDED RIGHT LANE (SYMBOL)	48'' X 48''	a		10 BWG	1	SA	T	
	9	W4-3R	ADDED RIGHT LANE (SYMBOL)	48'' X 48''	a		10 BWG	1	SA	T	
	10	M3-3B	SOUTH	24'' X 12''	a		TWT	1	WS	P	
		M1-1	INTERSTATE 35W	30'' X 24''	a						
		M6-2BL	LEFT 45° SLANTED ARROW	21'' X 15''	a						
	11	R2-1	SPEED LIMIT XX	30'' X 36''	a		TWT	1	WS	P	
3	1	E5-1A	EXIT GORE	78'' X 60''		a	S80	2	SA	P	
			61			a					
	2	W4-3L	ADDED LEFT LANE (SYMBOL)	48'' X 48''	a		10 BWG	1	SA	T	
	3	D10-2	MILEPOST	12'' X 36''	a		TWT	1	WS	P	
			61		a						
		D10-2	MILEPOST	12'' X 36''	a						
			61		a						
	4	R3-33	RIGHT LANE MUST EXIT	78'' X 36''	a		S80	1	SA	T	
	5	R2-1	SPEED LIMIT XX	48'' X 60''	a		S80	1	SA	T	
	6	W12-2	1 X' - X"	48'' X 48''	a		10 BWG	1	SA	T	
	7	W13-2	EXIT 35 M.P.H.	48'' X 60''	a		S80	1	SA	T	
	8	W1-2R	RIGHT CURVE (SYMBOL)	36'' X 36''	a		10 BWG	1	SA	T	
		W13-1P	ADVISORY SPEED PLAQUE (35 M.P.H.)	30'' X 30''	a						
	9	W13-3	RAMP 35 M.P.H.	48'' X 60''	a		S80	1	SA	T	
4	1	R3-33	RIGHT LANE MUST EXIT	78'' X 36''	a		S80	1	SA	T	
	2	W4-3R	ADDED RIGHT LANE (SYMBOL)	48'' X 48''	a		10 BWG	1	SA	T	
	3	W4-3R	ADDED RIGHT LANE (SYMBOL)	48'' X 48''	a		10 BWG	1	SA	T	
	4	E5-1A	EXIT GORE	78'' X 60''		a	S80	2	SA	P	
			60			a					
	5	M3-3B	SOUTH	36'' X 18''	a		TWT	1	WS	P	
		M1-1	INTERSTATE 35W	45'' X 36''	a						
	6	W1-8R	CHEVRON ALIGNMENT RIGHT	36'' X 48''	a		TWT	1	WS	P	
	7	W1-8R	CHEVRON ALIGNMENT RIGHT	36'' X 48''	a		TWT	1	WS	P	
	8	W1-8R	CHEVRON ALIGNMENT RIGHT	36'' X 48''	a		TWT	1	WS	P	
	9	W1-8R	CHEVRON ALIGNMENT RIGHT	36'' X 48''	a		TWT	1	WS	P	
	10	W1-8R	CHEVRON ALIGNMENT RIGHT	36'' X 48''	a		TWT	1	WS	P	
5	1	W8-13T	WATCH FOR ICE ON BRIDGE	48'' X 48''	a		10 BWG	1	SA	T	
	2	W8-13T	WATCH FOR ICE ON BRIDGE	48'' X 48''	a		10 BWG	1	SA	T	

ALUMINUM SIGN BLANKS (TYPE A)

Square Ft.	Min. Thickness
Less than 7.5	0.080"
7.5 to 15	0.100"
Greater than 15	0.125"

Sign supports shall be located as shown on the plans, except that the Engineer may shift the sign supports, within design guidelines, where necessary to secure a more desirable location or to avoid conflict with utilities. Unless otherwise shown on the plans, the Contractor shall stake and the Engineer will verify all sign support locations.

SUMMARY OF SMALL SIGNS

SOSS

© TxDOT May 1987

REVISIONS
DN: TxDOT 11-93 7-02
CK: TxDOT 8-95 2-07
DW: TxDOT 1-02 9-08
CK: TxDOT

DIST	COUNTY	CONT	SECT	JOB	HIGHWAY
FTW	TARRANT	0014	16	255, ETC.	IH35W

SHEET NO. 160

1R

DATE: 7/13/2012 1:47:26 PM
FILE: S3BSIGNSSUM00.dgn

DISCLAIMER: The use of this standard is governed by the "Texas Engineering Practice Act". No warranty of any kind is made by TxDOT for any purpose whatsoever. TxDOT assumes no responsibility for the conversion of this standard to other formats or for incorrect results or damages resulting from its use.

SUMMARY OF SMALL SIGNS

SM RD SGN ASSM TY XXXXX(X)XX(X-XXXX)

Post Type: FRP = Fiberglass, TWT = Thin-Wall, 10BWG = 10 BWG, S80 = Sch 80
Posts: (1 or 2)
Anchor Type: UA=Univer-Conc, UB=Univer-Bolt, SA=Slip-Conc, SB=Slip-Bolt, WS=Wedge Steel, WP=Wedge Plastic
Mounting Designation: P = Prefab. "Plain", T = Prefab. "T", U = Prefab. "U"
1EXT or 2EXT = # of Ext. BM = Extruded Wind Beam, WC = 1.12 #/ft Wing Chan., EXAL= Extruded Aluminum

PLAN SHEET NO.	SIGN NO.	SIGN NOMENCLATURE	SIGN TEXT	DIMENSIONS	ALUMINUM TYPE A	ALUMINUM TYPE G	Post Type	Posts	Anchor Type	Mounting Designation	
5	3	M3-1	NORTH	24'' X 12''	a		S80	1	SA	U	1EXT
		M1-4	81	24'' X 24''	a						
		M1-4	287	30'' X 24''	a						
		M6-2L	LEFT 45° SLANTED ARROW	21'' X 15''	a						
		M3-1B	NORTH	24'' X 12''	a						
		M1-1	INTERSTATE 35W	30'' X 24''	a						
		M6-2BR	RIGHT 45° SLANTED ARROW	21'' X 15''	a						
	4	R2-1	SPEED LIMIT XX	48'' X 60''	a		S80	1	SA	T	
6	1	W4-6R	ADDED RIGHT LANE - CURVE (SYMBOL)	48'' X 48''	a		10 BWG	1	SA	T	
	2	W4-3R	ADDED RIGHT LANE (SYMBOL)	48'' X 48''	a		10 BWG	1	SA	T	
	3	W4-3R	ADDED RIGHT LANE (SYMBOL)	48'' X 48''	a		10 BWG	1	SA	T	
7	1	M3-1B	NORTH	24'' X 12''	a		S80	1	SA	U	1EXT
		M1-1	INTERSTATE 35W	30'' X 24''	a						
		M6-2BR	RIGHT 45° SLANTED ARROW	21'' X 15''	a						
		M3-1	NORTH	24'' X 12''	a						
		M1-4	81	24'' X 24''	a						
		M1-4	287	30'' X 24''	a						
		M6-2L	LEFT 45° SLANTED ARROW	21'' X 15''	a						
	2	W4-3R	ADDED RIGHT LANE (SYMBOL)	48'' X 48''	a		10 BWG	1	SA	T	
	3	W4-3R	ADDED RIGHT LANE (SYMBOL)	48'' X 48''	a		10 BWG	1	SA	T	
	4	W8-13T	WATCH FOR ICE ON BRIDGE	48'' X 48''	a		10 BWG	1	SA	T	
	5	W8-13T	WATCH FOR ICE ON BRIDGE	48'' X 48''	a		10 BWG	1	SA	T	
	6	E5-1	EXIT GORE SIGN	72'' X 60''		a	S80	2	SA	P	
8	1	W4-3R	ADDED RIGHT LANE (SYMBOL)	48'' X 48''	a		10 BWG	1	SA	T	
	2	R2-1	SPEED LIMIT XX	48'' X 60''	a		S80	1	SA	T	
9	1	M3-1	NORTH	24'' X 12''	a		S80	1	SA	U	1EXT
		M1-4	81	24'' X 24''	a						
		M1-4	287	30'' X 24''	a						
		M6-2L	LEFT 45° SLANTED ARROW	21'' X 15''	a						
		M3-1B	NORTH	24'' X 12''	a						
		M1-1	INTERSTATE 35W	30'' X 24''	a						
		M6-2BL	LEFT 45° SLANTED ARROW	21'' X 15''	a						
	2	W14-1T	ROAD ENDS	36'' X 36''	a		10 BWG	1	SA	T	
		W16-2P	500 FEET	24'' X 18''	a						
	3	R2-1	SPEED LIMIT XX	48'' X 60''	a		S80	1	SA	T	
	4	M3-1B	NORTH	36'' X 18''	a		10 BWG	1	SA	P	
		M1-1	INTERSTATE 35W	45'' X 36''	a						
	5	W12-2	1 X' - X"	48'' X 48''	a		10 BWG	1	SA	T	
	6	E5-1A	EXIT GORE	78'' X 60''		a	S80	2	SA	P	
			60			a					
	7	R3-33	RIGHT LANE MUST EXIT	78'' X 36''	a		S80	1	SA	T	
	8	W12-2	1 X' - X"	48'' X 48''	a		10 BWG	1	SA	T	
	9	W12-2	1 X' - X"	48'' X 48''	a		10 BWG	1	SA	T	
	10	E5-1A	EXIT GORE	78'' X 60''		a	S80	2	SA	P	
			59			a					
10	1	R3-33AT	LEFT LANE MUST ENTER RAMP	48'' X 48''	a		10 BWG	1	SA	T	
	2	W9-2TL	LANE ENDS MERGE LEFT	36'' X 36''	a		TWT	1	WS	T	
	3	D10-2	MILEPOST	12'' X 36''	a		TWT	1	WS	P	
			60		a						
		D10-2	MILEPOST	12'' X 36''	a						
			60		a						

ALUMINUM SIGN BLANKS (TYPE A)

Square Ft.	Min. Thickness
Less than 7.5	0.080"
7.5 to 15	0.100"
Greater than 15	0.125"

Sign supports shall be located as shown on the plans, except that the Engineer may shift the sign supports, within design guidelines, where necessary to secure a more desirable location or to avoid conflict with utilities. Unless otherwise shown on the plans, the Contractor shall stake and the Engineer will verify all sign support locations.

SUMMARY OF SMALL SIGNS
SOSS

©TxDOT May 1987

DN: TxDOT	REVISIONS
CK: TxDOT	11-93 7-02
DW: TxDOT	8-95 2-07
CK: TxDOT	1-02 9-08

DIST	COUNTY	SHEET NO.	CONT	SECT	JOB	HIGHWAY
FTW	TARRANT	161	0014	16	255, ETC.	IH35W

1R

DATE: 7/13/2012 1:47:26 PM
FILE: S3BSIGNSSUM00.dgn

DISCLAIMER: The use of this standard is governed by the "Texas Engineering Practice Act". No warranty of any kind is made by TxDOT for any purpose whatsoever. TxDOT assumes no responsibility for the conversion of this standard to other formats or for incorrect results or damages resulting from its use.

SUMMARY OF SMALL SIGNS

SM RD SGN ASSM TY XXXXX(X)XX(X-XXXX)

Post Type: FRP = Fiberglass; TWT = Thin-Wall; 10BWG = 10 BWG; S80 = Sch 80

Anchor Type: UA=Univer-Conc; UB=Univer-Bolt; SA=Slip-Conc; SB=Slip-Bolt; WS=Wedge Steel; WP=Wedge Plastic

Mounting Designation: P = Prefab. "Plain"; T = Prefab. "T"; U = Prefab. "U"

1EXT or 2EXT = # of Ext.; BM = Extruded Wind Beam; WC = 1.12 #/ft Wing Chan.; EXAL= Extruded Aluminum

PLAN SHEET NO.	SIGN NO.	SIGN NOMENCLATURE	SIGN TEXT	DIMENSIONS	ALUMINUM TYPE A	ALUMINUM TYPE G	Post Type	Posts (1 or 2)	Anchor Type	Mounting Designation	
10	4	R3-33	RIGHT LANE MUST EXIT	78'' X 36''	a		S80	1	SA	T	
	5	W4-3L	ADDED LEFT LANE (SYMBOL)	36'' X 36''	a		TWT	1	WS	T	
	6	W4-3L	ADDED LEFT LANE (SYMBOL)	48'' X 48''	a		10 BWG	1	SA	T	
		R5-1A	WRONG WAY	42'' X 30''	a						
	7	R5-1A	WRONG WAY	42'' X 30''	a		TWT	1	WS	T	
	8	R4-3BT	DO NOT CROSS DOUBLE WHITE LINE	48'' X 48''	a		10 BWG	1	SA	T	
		R5-1	DO NOT ENTER	48'' X 48''	a						
	9	R4-3BT	DO NOT CROSS DOUBLE WHITE LINE	48'' X 48''	a		10 BWG	1	SA	T	
		R5-1	DO NOT ENTER	48'' X 48''	a						
	10	R4-3BT	DO NOT CROSS DOUBLE WHITE LINE	36'' X 36''	a		TWT	1	WS	T	
11	1	W14-1T	ROAD ENDS	36'' X 36''	a		TWT	1	WS	T	
	2	R7-1D	NO PARKING ANY TIME	12'' X 18''	a		TWT	1	WS	P	
	3	R2-1	SPEED LIMIT XX	30'' X 36''	a		TWT	1	WS	P	
	4	R2-1	SPEED LIMIT XX	30'' X 36''	a		TWT	1	WS	P	
	5	R7-1D	NO PARKING ANY TIME	12'' X 18''	a		TWT	1	WS	P	
	6	R7-1D	NO PARKING ANY TIME	12'' X 18''	a		TWT	1	WS	P	
	7	W9-2TL	LANE ENDS MERGE LEFT	36'' X 36''	a		TWT	1	WS	T	
	8	M3-3B	SOUTH	24'' X 12''	a		S80	1	SA	U	1EXT
		M1-1	INTERSTATE 35W	30'' X 24''	a						
		M5-1BL	ADVANCE TURN LEFT	21'' X 15''	a						
		M3-2B	EAST	24'' X 12''	a						
		M90-3T	INTERSTATE 820 TOLL	24'' X 24''	a						
		M5-1BL	ADVANCE TURN LEFT	21'' X 15''	a						
		M3-1B	NORTH	24'' X 12''	a						
		M1-1	INTERSTATE 35W	30'' X 24''	a						
		M6-1BR	RIGHT ARROW	21'' X 15''	a						
	9	R1-2	YIELD	36 X 36 X 36	a		10 BWG	1	SA	P	
		R6-2R	ONE WAY (RIGHT)	30'' X 36''	a						
	10	D1-2	(TWO STREET NAMES WITH ARROWS)	84'' X 30''	a		S80	1	SA	T	
			Fort Worth		a						
			Denton		a						
	11	M3-1B	NORTH	24'' X 12''	a		TWT	1	WS	P	
		M1-1	INTERSTATE 35W	30'' X 24''	a						
		M6-1BL	LEFT ARROW	21'' X 15''	a						
	12	R5-1	DO NOT ENTER	36'' X 36''	a		TWT	1	WS	T	
	13	R3-7L	LEFT LANE MUST TURN LEFT	36'' X 36''	a		TWT	1	WS	T	
		R5-1	DO NOT ENTER	36'' X 36''	a						
	14	R5-1A	WRONG WAY	42'' X 30''	a		TWT	1	WS	T	
	15	R5-1A	WRONG WAY	42'' X 30''	a		TWT	1	WS	T	
		R3-8UT	(LEFT TURNAROUND) ONLY	30'' X 36''	a						
	16	M3-3B	SOUTH	24'' X 12''	a		TWT	1	WS	P	
		M1-1	INTERSTATE 35W	30'' X 24''	a						
		M5-3TB	LEFT U-TURN ARROW	21'' X 15''	a						
	17	I-2G	NAME WITH -->	90'' X 18''	a		10 BWG	1	SA	T	
			Fort Worth		a						
	18	I-2G	NAME WITH -->	72'' X 18''	a		10 BWG	1	SA	T	
			Denton								
	19	R2-1	SPEED LIMIT 40	30'' X 36''	a		TWT	1	WS	T	
	20	R2-1	SPEED LIMIT 40	30'' X 36''	a		TWT	1	WS	T	
	21	R3-8	LANE CONTROL (MOD)	54'' X 30''	a		10 BWG	1	SA	T	
	22	R3-8	LANE CONTROL (MOD)	54'' X 30''	a		10 BWG	1	SA	T	

ALUMINUM SIGN BLANKS (TYPE A)

Square Ft.	Min. Thickness
Less than 7.5	0.080"
7.5 to 15	0.100"
Greater than 15	0.125"

Sign supports shall be located as shown on the plans, except that the Engineer may shift the sign supports, within design guidelines, where necessary to secure a more desirable location or to avoid conflict with utilities. Unless otherwise shown on the plans, the Contractor shall stake and the Engineer will verify all sign support locations.

© TxDOT May 1982

REVISIONS
DN:-TxDOT 11-93 7-02
CK:-TxDOT 8-95 2-07
DW:-TxDOT 1-02 9-08
CK:-TxDOT

SUMMARY OF SMALL SIGNS

SOSS

DIST	COUNTY	SHEET NO.	CONT	SECT	JOB	HIGHWAY
FTW	TARRANT	162	0014	16	255, ETC.	IH35W

1R

DATE: 7/13/2012 1:47:27 PM
FILE: S3BSIGNSSUM00.dgn

DISCLAIMER: The use of this standard is governed by the "Texas Engineering Practice Act". No warranty of any kind is made by TxDOT for any purpose whatsoever. TxDOT assumes no responsibility for the conversion of this standard to other formats or for incorrect results or damages resulting from its use.

SUMMARY OF SMALL SIGNS

SM RD SGN ASSM TY XXXXX(X)XX(X-XXXX)

Post Type: FRP = Fiberglass; TWT = Thin-Wall; 10BWG = 10 BWG; S80 = Sch 80

Posts: (1 or 2)

Anchor Type: UA=Univer-Conc; UB=Univer-Bolt; SA=Slip-Conc; SB=Slip-Bolt; WS=Wedge Steel; WP=Wedge Plastic

Mounting Designation: P = Prefab. "Plain"; T = Prefab. "T"; U = Prefab. "U"

1EXT or 2EXT = # of Ext.; BM = Extruded Wind Beam; WC = 1.12 #/ft Wing Chan.; EXAL= Extruded Aluminum

PLAN SHEET NO.	SIGN NO.	SIGN NOMENCLATURE	SIGN TEXT	DIMENSIONS	ALUMINUM TYPE A	ALUMINUM TYPE G	Post Type	Posts (1 or 2)	Anchor Type	Mounting Designation	
11	23	M3-1B	NORTH	24'' X 12''	a		TWT	1	WS	P	
		M1-1	INTERSTATE 35W	30'' X 24''	a						
		M5-3TB	LEFT U-TURN ARROW	21'' X 15''	a						
	24	R3-8UT	(LEFT U-TURN) ONLY	30'' X 36''	a		TWT	1	WS	T	
		R5-1A	WRONG WAY	42'' X 30''	a						
	25	R3-7R	RIGHT LANE MUST TURN RIGHT	36'' X 36''	a		TWT	1	WS	T	
		R5-1A	WRONG WAY	42'' X 30''	a						
	26	R3-7L	LEFT LANE MUST TURN LEFT	36'' X 36''	a		TWT	1	WS	T	
		R5-1	DO NOT ENTER	36'' X 36''	a						
	27	R3-7R	RIGHT LANE MUST TURN RIGHT	36'' X 36''	a		TWT	1	WS	T	
		R5-1	DO NOT ENTER	36'' X 36''	a						
	28	R1-2	YIELD	36 X 36 X 36	a		TWT	1	WS	T	
	29	M3-3B	SOUTH	24'' X 12''	a		TWT	1	WS	P	
		M1-1	INTERSTATE 35W	30'' X 24''	a						
		M1-1	INTERSTATE 35W	30'' X 24''	a						
		M6-1BL	LEFT ARROW	21'' X 15''	a						
	30	D1-2	(TWO STREET NAMES WITH ARROWS)	90'' X 30''	a		S80	1	SA	T	
			Denton								
			Fort Worth								
	31	M3-1B	NORTH	24'' X 12''	a		S80	1	SA	U	1EXT
		M1-1	INTERSTATE 35W	30'' X 24''	a						
		M5-1BL	ADVANCE TURN LEFT	21'' X 15''	a						
		M3-2B	EAST	24'' X 12''	a						
		M90-3T	INTERSTATE 820 TOLL	24'' X 24''	a						
		M6-1BR	RIGHT ARROW	21'' X 15''	a						
		M3-3B	SOUTH	24'' X 12''	a						
		M1-1	INTERSTATE 35W	30'' X 24''	a						
		M6-1BR	RIGHT ARROW	21'' X 15''	a						
	32	R1-2	YIELD	36 X 36 X 36	a		10 BWG	1	SA	P	
		R6-2R	ONE WAY (RIGHT)	30'' X 36''	a						
	33	R3-7R	RIGHT LANE MUST TURN RIGHT	36'' X 36''			TWT	1	WS	T	
	34	R3-7R	RIGHT LANE MUST TURN RIGHT	36'' X 36''			TWT	1	WS	T	
	35	M3-2B	EAST	24'' X 12''			S80	1	SA	U	
		M90-3T	INTERSTATE 820 TOLL	24'' X 24''							
		M6-2BL	LEFT 45° SLANTED ARROW	21'' X 15''							
		M3-3B	SOUTH	24'' X 12''							
		M1-1	INTERSTATE 35W	30'' X 24''							
		M6-3B	STRAIGHT ARROW	21'' X 15''							
	36	R2-1	SPEED LIMIT XX	30'' X 36''	a		TWT	1	WS	T	
12	1	R3-8	LANE CONTROL (MOD)	36'' X 30''	a		TWT	1	WS	T	
	2	R3-8	LANE CONTROL (MOD)	54'' X 30''	a		10 BWG	1	SA	T	
	3	R1-1	STOP	30'' X 30''	a		TWT	1	WS	T	
	4	R6-1R	ONE WAY (RIGHT)	54'' X 18''	a		10 BWG	1	SA	T	
	5	R2-1	SPEED LIMIT XX	30'' X 36''	a		TWT	1	WS	P	
	6	R2-1	SPEED LIMIT XX	30'' X 36''	a		TWT	1	WS	P	
	7	R1-1	STOP	30'' X 30''	a		TWT	1	WS	T	
	8	R6-1R	ONE WAY (RIGHT)	54'' X 18''	a		10 BWG	1	SA	T	
	9	R4-3BT	DO NOT CROSS DOUBLE WHITE LINE	48'' X 48''	a		10 BWG	1	SA	T	
		R5-1	DO NOT ENTER	48'' X 48''	a						
	10	R4-3BT	DO NOT CROSS DOUBLE WHITE LINE	48'' X 48''	a		10 BWG	1	SA	T	
		R5-1	DO NOT ENTER	48'' X 48''	a						
	11	R1-1	STOP	30'' X 30''	a		TWT	1	WS	T	
		D3-1	CORRINE DR	42'' X 08''	a						
	12	R6-1R	ONE WAY (RIGHT)	54'' X 18''	a		10 BWG	1	SA	T	
	13	W4-3L	ADDED LEFT LANE (SYMBOL)	48'' X 48''	a		10 BWG	1	SA	T	
		R5-1A	WRONG WAY	42'' X 30''	a						

ALUMINUM SIGN BLANKS (TYPE A)

Square Ft.	Min. Thickness
Less than 7.5	0.080"
7.5 to 15	0.100"
Greater than 15	0.125"

Sign supports shall be located as shown on the plans, except that the Engineer may shift the sign supports, within design guidelines, where necessary to secure a more desirable location or to avoid conflict with utilities. Unless otherwise shown on the plans, the Contractor shall stake and the Engineer will verify all sign support locations.

©TxDOT May 1987

DN: TxDOT REVISIONS
CK: TxDOT 11-93 7-02
DW: TxDOT 8-95 2-07
CK: TxDOT 1-02 9-08

SUMMARY OF SMALL SIGNS

SOSS

CONT	SECT	JOB	HIGHWAY
0014	16	255, ETC.	IH35W

DIST	COUNTY	SHEET NO.
FTW	TARRANT	163

DATE: 7/13/2012 1:47:27 PM
FILE: S3BSIGNSSUM00.dgn

DISCLAIMER: The use of this standard is governed by the "Texas Engineering Practice Act". No warranty of any kind is made by TxDOT for any purpose whatsoever. TxDOT assumes no responsibility for the conversion of this standard to other formats or for incorrect results or damages resulting from its use.

SUMMARY OF SMALL SIGNS

SM RD SGN ASSM TY XXXXX(X)XX(X-XXXX)

PLAN SHEET NO.	SIGN NO.	SIGN NOMENCLATURE	SIGN TEXT	DIMENSIONS	ALUMINUM TYPE A	ALUMINUM TYPE G	Post Type FRP = Fiberglass TWT = Thin-Wall 10BWG = 10 BWG S80 = Sch 80	Posts (1 or 2)	Anchor Type UA=Univer-Conc UB=Univer-Bolt SA=Slip-Conc SB=Slip-Bolt WS=Wedge Steel WP=Wedge Plastic	Mounting Designation P = Prefab. "Plain" T = Prefab. "T" U = Prefab. "U"	1EXT or 2EXT = # of Ext. BM = Extruded Wind Beam WC = 1.12 #/ft Wing Chan. EXAL= Extruded Aluminum
12	14	W4-3L	ADDED LEFT LANE (SYMBOL)	48'' X 48''	a		10 BWG	1	SA	T	
		R5-1A	WRONG WAY	42'' X 30''	a						
	15	R2-1	SPEED LIMIT XX	48'' X 60''	a		S80	1	SA	T	
	16	R3-33	RIGHT LANE MUST EXIT	78'' X 36''	a		S80	1	SA	T	
	17	W8-13T	WATCH FOR ICE ON BRIDGE	48'' X 48''	a		10 BWG	1	SA	T	
	18	W8-13T	WATCH FOR ICE ON BRIDGE	48'' X 48''	a		10 BWG	1	SA	T	
	19	R6-1R	ONE WAY (RIGHT)	54'' X 18''	a		10 BWG	1	SA	T	
	20	R1-1	STOP	30'' X 30''	a		TWT	1	WS	T	
	21	R6-1R	ONE WAY (RIGHT)	54'' X 18''	a		10 BWG	1	SA	T	
	22	R1-1	STOP	30'' X 30''	a		TWT	1	WS	T	
		D3-1	LOS OSOS DR	48'' X 08''	a						
13	1	R1-2	YIELD	48 X 48 X 48	a		TWT	1	WS	T	
		R1-2BT	TO RAMP	21'' X 15''	a						
	2	R1-2	YIELD	48 X 48 X 48	a		TWT	1	WS	T	
		R1-2BT	TO RAMP	21'' X 15''	a						
	3	R5-1	DO NOT ENTER	48'' X 48''	a		10 BWG	1	SA	T	
	4	R5-1	DO NOT ENTER	48'' X 48''	a		10 BWG	1	SA	T	
	5	R5-1A	WRONG WAY	42'' X 30''	a		TWT	1	WS	T	
	6	W4-1L	MERGE SIGN	48'' X 48''	a		10 BWG	1	SA	T	
		R5-1A	WRONG WAY	42'' X 30''	a						
	7	W4-1L	MERGE SIGN	36'' X 36''	a		10 BWG	1	SA	T	
	8	W4-3R	ADDED RIGHT LANE (SYMBOL)	48'' X 48''	a		10 BWG	1	SA	T	
	9	W4-3R	ADDED RIGHT LANE (SYMBOL)	48'' X 48''	a		10 BWG	1	SA	T	
	10	R3-33AT	LEFT LANE MUST ENTER RAMP	48'' X 48''	a		10 BWG	1	SA	T	
	11	M3-3B	SOUTH	24'' X 12''	a		TWT	1	WS	P	
		M1-1	INTERSTATE 35W	30'' X 24''	a						
		M6-2BL	LEFT 45° SLANTED ARROW	21'' X 15''	a						
	12	M3-3B	SOUTH	24'' X 12''	a		TWT	1	WS	P	
		M1-1	INTERSTATE 35W	30'' X 24''	a						
		M6-2BL	LEFT 45° SLANTED ARROW	21'' X 15''	a						
	13	W8-13T	WATCH FOR ICE ON BRIDGE	48'' X 48''	a		10 BWG	1	SA	T	
	14	W8-13T	WATCH FOR ICE ON BRIDGE	48'' X 48''	a		10 BWG	1	SA	T	
	15	E5-1C	EXIT GORE	60'' X 90''		a	S80	2	SA	P	
		58				a					
	16	R6-1R	ONE WAY (RIGHT)	54'' X 18''	a		10 BWG	1	SA	T	
	17	R1-1	STOP	30'' X 30''	a		TWT	1	WS	T	
	18	R6-1R	ONE WAY (RIGHT)	54'' X 18''	a		10 BWG	1	SA	T	
	19	R1-1	STOP	30'' X 30''	a		TWT	1	WS	T	
14	1	R1-1	STOP	30'' X 30''	a		TWT	1	WS	T	
	2	R6-1R	ONE WAY (RIGHT)	54'' X 18''	a		10 BWG	1	SA	T	
	3	M3-1B	NORTH	24'' X 12''	a		TWT	1	WS	P	
		M1-1	INTERSTATE 35W	30'' X 24''	a						
		M6-2BL	LEFT 45° SLANTED ARROW	21'' X 15''	a						

ALUMINUM SIGN BLANKS (TYPE A)

Square Ft.	Min. Thickness
Less than 7.5	0.080"
7.5 to 15	0.100"
Greater than 15	0.125"

Sign supports shall be located as shown on the plans, except that the Engineer may shift the sign supports, within design guidelines, where necessary to secure a more desirable location or to avoid conflict with utilities. Unless otherwise shown on the plans, the Contractor shall stake and the Engineer will verify all sign support locations.

© TxDOT May, 1987

DN: TxDOT 11-93 7-02
CK: TxDOT 8-95 2-07
DW: TxDOT 1-02 9-08
CK: TxDOT 9-08

REVISIONS

SUMMARY OF SMALL SIGNS

SOSS

DIST	COUNTY	SHEET NO.	HIGHWAY	JOB	SECT	CONT
FTW	TARRANT	164	IH35W	0014 16 255, ETC.		

1R

DATE: 7/13/2012 1:47:27 PM
FILE: S3BSIGNSSUM00.dgn

DISCLAIMER: The use of this standard is governed by the "Texas Engineering Practice Act". No warranty of any kind is made by TxDOT for any purpose whatsoever. TxDOT assumes no responsibility for the conversion of this standard to other formats or for incorrect results or damages resulting from its use.

SUMMARY OF SMALL SIGNS

SM RD SGN ASSM TY XXXXX(X)XX(X-XXXX)

PLAN SHEET NO.	SIGN NO.	SIGN NOMENCLATURE	SIGN TEXT	DIMENSIONS	ALUMINUM TYPE A	ALUMINUM TYPE G	Post Type FRP = Fiberglass TWT = Thin-Wall 10BWG = 10 BWG S80 = Sch 80	Posts (1 or 2)	Anchor Type UA=Univer-Conc UB=Univer-Bolt SA=Slip-Conc SB=Slip-Bolt WS=Wedge Steel WP=Wedge Plastic	Mounting Designation P = Prefab. "Plain" T = Prefab. "T" U = Prefab. "U"	1EXT or 2EXT = # of Ext. BM = Extruded Wind Beam WC = 1.12 #/ft Wing Chan. EXAL= Extruded Aluminum
14	4	M3-1B	NORTH	24'' X 12''	a		TWT	1	WS	P	
		M1-1	INTERSTATE 35W	30'' X 24''	a						
		M6-2BL	LEFT 45° SLANTED ARROW	21'' X 15''	a						
	5	R1-1	STOP	30'' X 30''	a		TWT	1	WS	T	
		D3-1	FOSSIL BLUFF DR	54'' X 08''	a						
	6	R5-2	NO TRUCKS SYMBOL	24'' X 24''	a		TWT	1	WS	P	
	7	R6-1R	ONE WAY (RIGHT)	54'' X 18''	a		10 BWG	1	SA	T	
	8	I-3	BIG FOSSIL CREEK	78'' X 30''	a		S80	1	SA	U	
	9	W8-13T	WATCH FOR ICE ON BRIDGE	36'' X 36''	a		10 BWG	1	SA	T	
	10	W8-13T	WATCH FOR ICE ON BRIDGE	36'' X 36''	a		10 BWG	1	SA	T	
	11	W8-13T	WATCH FOR ICE ON BRIDGE	48'' X 48''	a		10 BWG	1	SA	T	
	12	W8-13T	WATCH FOR ICE ON BRIDGE	48'' X 48''	a		10 BWG	1	SA	T	
	13	E5-1	EXIT GORE SIGN	72'' X 60''	a		S80	2	SA	P	
	14	I-3	BIG FOSSIL CREEK	90'' X 36''	a		S80	1	SA	U	
	15	I-3	BIG FOSSIL CREEK	90'' X 36''	a		S80	1	SA	U	
	16	R5-1A	WRONG WAY	42'' X 30''	a		TWT	1	WS	T	
	17	W4-3L	ADDED LEFT LANE (SYMBOL)	48'' X 48''	a		10 BWG	1	SA	T	
		R5-1A	WRONG WAY	42'' X 30''	a						
	18	W8-13T	WATCH FOR ICE ON BRIDGE	48'' X 48''	a		10 BWG	1	SA	T	
	19	W8-13T	WATCH FOR ICE ON BRIDGE	48'' X 48''	a		10 BWG	1	SA	T	
	20	W8-13T	WATCH FOR ICE ON BRIDGE	48'' X 48''	a		10 BWG	1	SA	T	
	21	W8-13T	WATCH FOR ICE ON BRIDGE	48'' X 48''	a		10 BWG	1	SA	T	
	22	W8-13T	WATCH FOR ICE ON BRIDGE	48'' X 48''	a		10 BWG	1	SA	T	
	23	D10-2	MILEPOST	12'' X 36''	a		TWT	1	WS	P	
			59		a						
		D10-2	MILEPOST	12'' X 36''	a						
			59		a						
	24	W4-3R	ADDED RIGHT LANE (SYMBOL)	48'' X 48''	a		10 BWG	1	SA	T	
	25	W4-3R	ADDED RIGHT LANE (SYMBOL)	48'' X 48''	a		10 BWG	1	SA	T	
	26	R4-3BT	DO NOT CROSS DOUBLE WHITE LINE	36'' X 36''	a		TWT	1	WS	T	
	27	R4-3BT	DO NOT CROSS DOUBLE WHITE LINE	48'' X 48''	a		10 BWG	1	SA	T	
		R5-1	DO NOT ENTER	48'' X 48''	a						
	28	R4-3BT	DO NOT CROSS DOUBLE WHITE LINE	48'' X 48''	a		10 BWG	1	SA	T	
		R5-1	DO NOT ENTER	48'' X 48''	a						
	29	W8-13T	WATCH FOR ICE ON BRIDGE	36'' X 36''	a		TWT	1	WS	T	
	30	W8-13T	WATCH FOR ICE ON BRIDGE	36'' X 36''	a		TWT	1	WS	T	
	31	I-3	BIG FOSSIL CREEK	78'' X 30''	a		S80	1	SA	U	
	32	W3-3	TRAFFIC LIGHT (SYMBOL)	30'' X 30''	a		TWT	1	WS	T	
	33	W3-3	TRAFFIC LIGHT (SYMBOL)	30'' X 30''	a		TWT	1	WS	T	
	34	R2-1	SPEED LIMIT XX	30'' X 36''	a		TWT	1	WS	T	
	35	R2-1	SPEED LIMIT XX	30'' X 36''	a		TWT	1	WS	T	
	36	R3-5R	(RIGHT TURN) ONLY	30'' X 30''	a		TWT	1	WS	T	
	37	R3-8	LANE CONTROL (MOD)	54'' X 30''	a		10 BWG	1	SA	T	

ALUMINUM SIGN BLANKS (TYPE A)

Square Ft.	Min. Thickness
Less than 7.5	0.080"
7.5 to 15	0.100"
Greater than 15	0.125"

Sign supports shall be located as shown on the plans, except that the Engineer may shift the sign supports, within design guidelines, where necessary to secure a more desirable location or to avoid conflict with utilities. Unless otherwise shown on the plans, the Contractor shall stake and the Engineer will verify all sign support locations.

© TxDOT May, 1987

DN: TxDOT REVISIONS
CK: TxDOT 11-93 7-02
DW: TxDOT 8-95 2-07
CK: TxDOT 1-02 9-08

SUMMARY OF SMALL SIGNS

SOSS

DIST	COUNTY	CONT	SECT	JOB	HIGHWAY
FTW	TARRANT	0014	16	255, ETC.	IH35W

SHEET NO. 165

1R

DATE: 7/13/2012 1:47:27 PM
FILE: S3BSIGNSSUM00.dgn

DISCLAIMER: The use of this standard is governed by the "Texas Engineering Practice Act". No warranty of any kind is made by TxDOT for any purpose whatsoever. TxDOT assumes no responsibility for the conversion of this standard to other formats or for incorrect results or damages resulting from its use.

SUMMARY OF SMALL SIGNS

SM RD SGN ASSM TY XXXXX(X)XX(X-XXXX)

PLAN SHEET NO.	SIGN NO.	SIGN NOMENCLATURE	SIGN TEXT	DIMENSIONS	ALUMINUM TYPE A	ALUMINUM TYPE G	Post Type (FRP = Fiberglass, TWT = Thin-Wall, 10BWG = 10 BWG, S80 = Sch 80)	Posts (1 or 2)	Anchor Type (UA=Univer-Conc, UB=Univer-Bolt, SA=Slip-Conc, SB=Slip-Bolt, WS=Wedge Steel, WP=Wedge Plastic)	Mounting Designation: P = Prefab. "Plain", T = Prefab. "T", U = Prefab. "U"	Mounting Designation: 1EXT or 2EXT = # of Ext., BM = Extruded Wind Beam, WC = 1.12 #/ft Wing Chan., EXAL= Extruded Aluminum
14	38	R6-1R	ONE WAY (RIGHT)	54'' X 18''	a		10 BWG	1	SA	T	
	39	R3-8UT	(LEFT TURNAROUND) ONLY	30'' X 36''	a		TWT	1	WS	T	
		R5-1A	WRONG WAY	42'' X 30''	a						
	40	R1-1	STOP	30'' X 30''	a		TWT	1	WS	T	
		D3-1	FAIR DR	30'' X 08''	a						
	41	R3-7R	RIGHT LANE MUST TURN RIGHT	36'' X 36''	a		TWT	1	WS	T	
		R5-1A	WRONG WAY	42'' X 30''	a						
15	1	R1-1	STOP	30'' X 30''	a		TWT	1	WS	T	
	2	R6-1R	ONE WAY (RIGHT)	54'' X 18''	a		10 BWG	1	SA	T	
	3	R6-1L	ONE WAY (LEFT)	54'' X 18''	a		10 BWG	1	SA	T	
	4	R1-2	YIELD	36 X 36 X 36	a		10 BWG	1	SA	P	
		R6-2R	ONE WAY (RIGHT)	30'' X 36''	a						
	5	M3-3B	SOUTH	24'' X 12''	a		S80	1	SA	U	1EXT
		M1-1	INTERSTATE 35W	30'' X 24''	a						
		M5-1BL	ADVANCE TURN LEFT	21'' X 15''	a						
		M4-5B	TO	24'' X 12''	a						
		M1-1	INTERSTATE 820	30'' X 24''	a						
		M5-1BL	ADVANCE TURN LEFT	21'' X 15''	a						
		M3-1B	NORTH	24'' X 12''	a						
		M1-1	INTERSTATE 35W	30'' X 24''	a						
		M6-1BR	RIGHT ARROW	21'' X 15''	a						
	6	D1-2	(TWO STREET NAMES WITH ARROWS)	84'' X 30''	a		S80	1	SA	U	
			Fort Worth								
			Denton								
	7	M3-1B	NORTH	24'' X 12''	a		TWT	1	WS	P	
		M1-1	INTERSTATE 35W	30'' X 24''	a						
		M6-1BL	LEFT ARROW	21'' X 15''	a						
	8	R3-7L	LEFT LANE MUST TURN LEFT	36'' X 36''	a		TWT	1	WS	T	
		R5-1	DO NOT ENTER	36'' X 36''	a						
	9	R1-2	YIELD	36 X 36 X 36	a		TWT	1	WS	T	
	10	R5-1	DO NOT ENTER	36'' X 36''	a		TWT	1	WS	T	
	11	R3-7R	RIGHT LANE MUST TURN RIGHT	36'' X 36''	a		TWT	1	WS	T	
		R5-1A	WRONG WAY	42'' X 30''	a						
	12	D1-2	(TWO STREET NAMES WITH ARROWS)	96'' X 30''	a		S80	1	SA	U	
			Blue Mound								
			Watagua								
	13	R3-8UT	(LEFT TURNAROUND) ONLY	30'' X 36''	a		TWT	1	WS	T	
		R5-1A	WRONG WAY	42'' X 30''	a						
	14	R7-1D	NO PARKING ANY TIME	12'' X 18''	a		TWT	1	WS	P	
	15	W3-3	TRAFFIC LIGHT (SYMBOL)	36'' X 36''	a		TWT	1	WS	T	
	16	W3-3	TRAFFIC LIGHT (SYMBOL)	36'' X 36''	a		TWT	1	WS	T	
	17	R6-1R	ONE WAY (RIGHT)	54'' X 18''	a		10 BWG	1	SA	T	
	18	R6-1R	ONE WAY (RIGHT)	54'' X 18''	a		10 BWG	1	SA	T	
	19	R6-1R	ONE WAY (RIGHT)	54'' X 18''	a		10 BWG	1	SA	T	
	20	R7-1D	NO PARKING ANY TIME	12'' X 18''	a		TWT	1	WS	P	
	21	R3-7R	RIGHT LANE MUST TURN RIGHT	36'' X 36''	a		TWT	1	WS	T	
	22	R3-8	LANE CONTROL (MOD)	54'' X 30''	a		10 BWG	1	SA	T	
	23	W8-13T	WATCH FOR ICE ON BRIDGE	48'' X 48''	a		10 BWG	1	SA	T	
	24	W8-13T	WATCH FOR ICE ON BRIDGE	48'' X 48''	a		10 BWG	1	SA	T	
	25	W8-13T	WATCH FOR ICE ON BRIDGE	48'' X 48''	a		10 BWG	1	SA	T	

ALUMINUM SIGN BLANKS (TYPE A)

Square Ft.	Min. Thickness
Less than 7.5	0.080"
7.5 to 15	0.100"
Greater than 15	0.125"

Sign supports shall be located as shown on the plans, except that the Engineer may shift the sign supports, within design guidelines, where necessary to secure a more desirable location or to avoid conflict with utilities. Unless otherwise shown on the plans, the Contractor shall stake and the Engineer will verify all sign support locations.

SUMMARY OF SMALL SIGNS

SOSS

©TxDOT May 1987

DIST	CONT	SECT	JOB	HIGHWAY
04	0014	16	255, ETC.	IH35W

DIST: FTW
COUNTY: TARRANT
SHEET NO.: 166

REVISIONS
DN:-TxDOT 11-93 7-02
CK:-TxDOT 8-95 2-07
DN:-TxDOT 1-02 9-08
CK:-TxDOT

DATE: 7/13/2012 1:47:28 PM
FILE: S3BSIGNSSUM00.dgn

DISCLAIMER: The use of this standard is governed by the "Texas Engineering Practice Act". No warranty of any kind is made by TxDOT for any purpose whatsoever. TxDOT assumes no responsibility for the conversion of this standard to other formats or for incorrect results or damages resulting from its use.

SUMMARY OF SMALL SIGNS

SM RD SGN ASSM TY XXXXX(X)XX(X-XXXX)

PLAN SHEET NO.	SIGN NO.	SIGN NOMENCLATURE	SIGN TEXT	DIMENSIONS	ALUMINUM TYPE A	ALUMINUM TYPE G	Post Type (FRP = Fiberglass, TWT = Thin-Wall, 10BWG = 10 BWG, S80 = Sch 80)	Posts (1 or 2)	Anchor Type (UA=Univer-Conc, UB=Univer-Bolt, SA=Slip-Conc, SB=Slip-Bolt, WS=Wedge Steel, WP=Wedge Plastic)	Mounting Designation: P = Prefab. "Plain", T = Prefab. "T", U = Prefab. "U"	Mounting Designation: 1EXT or 2EXT = # of Ext., BM = Extruded Wind Beam, WC = 1.12 #/ft Wing Chan., EXAL= Extruded Aluminum
15	26	W8-13T	WATCH FOR ICE ON BRIDGE	48'' X 48''	a		10 BWG	1	SA	T	
	27	I-2G	NAME WITH -->	72'' X 18''	a		TWT	1	WS	T	
			Denton								
	28	I-2G	NAME WITH -->	90'' X 18''	a		10 BWG	1	SA	T	
			Fort Worth								
	29	E5-1C	EXIT GORE	60'' X 90''		a	S80	2	SA	P	
			59								
	30	R3-7L	LEFT LANE MUST TURN LEFT	36'' X 36''	a		TWT	1	WS	T	
		R5-1	DO NOT ENTER	36'' X 36''	a						
	31	D1-2	(TWO STREET NAMES WITH ARROWS)	96'' X 30''	a		S80	1	SA	U	
			Watagua								
			Blue Mound								
								2			
	32	R3-7R	RIGHT LANE MUST TURN RIGHT	36'' X 36''	a		TWT	1	WS	T	
		R5-1	DO NOT ENTER	36'' X 36''	a						
	33	R1-2	YIELD	36 X 36 X 36	a		TWT	1	WS	T	
	34	M3-3B	SOUTH	24'' X 12''	a		TWT	1	WS	P	
		M1-1	INTERSTATE 35W	30'' X 24''	a						
		M6-1BL	LEFT ARROW	21'' X 15''	a						
	35	D1-2	(TWO STREET NAMES WITH ARROWS)	90'' X 30''	a		S80	1	SA	U	
			Denton								
			Fort Worth								
	36	M3-1B	NORTH	24'' X 12''	a		S80	1	SA	U	1EXT
		M1-1	INTERSTATE 35W	30'' X 24''	a						
		M5-1BL	ADVANCE TURN LEFT	21'' X 15''	a						
		M4-5B	TO	24'' X 12''	a						
		M1-1	INTERSTATE 820	30'' X 24''	a						
		M6-1BR	RIGHT ARROW	21'' X 15''	a						
		M3-3B	SOUTH	24'' X 12''	a						
		M1-1	INTERSTATE 35W	30'' X 24''	a						
		M6-1BR	RIGHT ARROW	21'' X 15''	a						
		M6-1BR	RIGHT ARROW	21'' X 15''	a						
	37	R6-1L	ONE WAY (LEFT)	54'' X 18''	a		TWT	1	WS	T	
	38	R7-1D	NO PARKING ANY TIME	12'' X 18''	a		TWT	1	WS	P	
	39	R1-2	YIELD	36 X 36 X 36	a		10 BWG	1	SA	P	
		R6-2R	ONE WAY (RIGHT)	30'' X 36''	a						
	40	R7-1D	NO PARKING ANY TIME	12'' X 18''	a		TWT	1	WS	P	
	41	R7-1D	NO PARKING ANY TIME	12'' X 18''	a		TWT	1	WS	P	
	42	R6-1R	ONE WAY (RIGHT)	54'' X 18''	a		10 BWG	1	SA	T	
	43	R1-1	STOP	30'' X 30''	a		TWT	1	WS	T	
	44	W14-1T	ROAD ENDS	36'' X 36''	a		TWT	1	WS	P	
	45	R7-1D	NO PARKING ANY TIME	12'' X 18''	a		TWT	1	WS	P	
	46	R7-1D	NO PARKING ANY TIME	12'' X 18''	a		TWT	1	WS	P	
	47	R7-1D	NO PARKING ANY TIME	12'' X 18''	a		TWT	1	WS	P	
	48	R6-1R	ONE WAY (RIGHT)	54'' X 18''	a		10 BWG	1	SA	T	
	49	R1-1	STOP	30'' X 30''	a		TWT	1	WS	T	
	50	M3-3B	SOUTH	24'' X 12''	a		S80	1	SA	P	
		M1-1	INTERSTATE 35W	30'' X 24''	a						
		M6-2BL	LEFT 45° SLANTED ARROW	21'' X 15''	a						
		M4-5B	TO	24'' X 12''	a						
		M1-1	INTERSTATE 820	30'' X 24''	a						
		M6-2BL	LEFT 45° SLANTED ARROW	21'' X 15''	a						
	51	R7-1D	NO PARKING ANY TIME	12'' X 18''	a		TWT	1	WS	P	
	52	R7-1D	NO PARKING ANY TIME	12'' X 18''	a		TWT	1	WS	P	
	53	R1-1	STOP	30'' X 30''	a		TWT	1	WS	T	
		R6-1R	ONE WAY (RIGHT)	54'' X 18''	a						
16	1	R6-1R	ONE WAY (RIGHT)	54'' X 18''	a		10 BWG	1	SA	T	

ALUMINUM SIGN BLANKS (TYPE A)

Square Ft.	Min. Thickness
Less than 7.5	0.080"
7.5 to 15	0.100"
Greater than 15	0.125"

Sign supports shall be located as shown on the plans, except that the Engineer may shift the sign supports, within design guidelines, where necessary to secure a more desirable location or to avoid conflict with utilities. Unless otherwise shown on the plans, the Contractor shall stake and the Engineer will verify all sign support locations.

SUMMARY OF SMALL SIGNS

SOSS

©TxDOT May 1987

DN: TxDOT	CK: TxDOT	DW: TxDOT	CK: TxDOT	REVISIONS
11-93	7-02	8-95	2-07	1-02 9-08

CONT	SECT	JOB	HIGHWAY
0014	16	255, ETC.	IH35W

DIST	COUNTY	SHEET NO.
FTW	TARRANT	167

1R

DATE: 7/13/2012 1:47:28 PM
FILE: S3BSIGNSSUM00.dgn

DISCLAIMER: The use of this standard is governed by the "Texas Engineering Practice Act". No warranty of any kind is made by TxDOT for any purpose whatsoever. TxDOT assumes no responsibility for the conversion of this standard to other formats or for incorrect results or damages resulting from its use.

SUMMARY OF SMALL SIGNS

SM RD SGN ASSM TY XXXXX(X)XX(X-XXXX)

PLAN SHEET NO.	SIGN NO.	SIGN NOMENCLATURE	SIGN TEXT	DIMENSIONS	ALUMINUM TYPE A	ALUMINUM TYPE G	Post Type: FRP = Fiberglass, TWT = Thin-Wall, 10BWG = 10 BWG, S80 = Sch 80	Posts (1 or 2)	Anchor Type: UA=Univer-Conc, UB=Univer-Bolt, SA=Slip-Conc, SB=Slip-Bolt, WS=Wedge Steel, WP=Wedge Plastic	Mounting Designation: P = Prefab. "Plain", T = Prefab. "T", U = Prefab. "U"	Mounting Designation: 1EXT or 2EXT = # of Ext., BM = Extruded Wind Beam, WC = 1.12 #/ft Wing Chan., EXAL= Extruded Aluminum
16	2	R1-1	STOP	30'' X 30''	a		TWT	1	WS	T	
		D3-1	SANDSHELL BLVD	54'' X 08''	a						
	3	R2-1	SPEED LIMIT XX	30'' X 36''	a		TWT	1	WS	T	
	4	R2-1	SPEED LIMIT XX	30'' X 36''	a		TWT	1	WS	T	
	5	R4-3BT	DO NOT CROSS DOUBLE WHITE LINE	48'' X 48''	a		10 BWG	1	SA	T	
		R5-1	DO NOT ENTER	48'' X 48''	a						
	6	R4-3BT	DO NOT CROSS DOUBLE WHITE LINE	48'' X 48''	a		10 BWG	1	SA	T	
		R5-1	DO NOT ENTER	48'' X 48''	a						
	7	R1-1	STOP	30'' X 30''	a		TWT	1	WS	T	
	8	R6-1R	ONE WAY (RIGHT)	54'' X 18''	a		10 BWG	1	SA	T	
	9	W4-3L	ADDED LEFT LANE (SYMBOL)	48'' X 48''	a		10 BWG	1	SA	T	
		R5-1A	WRONG WAY	42'' X 30''	a						
	10	W4-3L	ADDED LEFT LANE (SYMBOL)	48'' X 48''	a		10 BWG	1	SA	T	
		R5-1A	WRONG WAY	42'' X 30''	a						
	11	W4-1R	MERGE SIGN (SYMBOL)	48'' X 48''	a		10 BWG	1	SA	T	
	12	W4-1R	MERGE SIGN (SYMBOL)	48'' X 48''	a		10 BWG	1	SA	T	
	13	W9-2TL	LANE ENDS MERGE LEFT	48'' X 48''	a		10 BWG	1	SA	T	
	14	R7-1D	NO PARKING ANY TIME	12'' X 18''	a		TWT	1	WS	P	
	15	R7-1D	NO PARKING ANY TIME	12'' X 18''	a		TWT	1	WS	P	
	16	M3-3B	SOUTH	24'' X 12''	a		10 BWG	1	SA	P	
		M1-1	INTERSTATE 35W	30'' X 24''	a						
		M6-2BL	LEFT 45° SLANTED ARROW	21'' X 15''	a						
		M4-5B	TO	24'' X 12''	a						
		M1-1	INTERSTATE 820	30'' X 24''	a						
		M6-2BL	LEFT 45° SLANTED ARROW	21'' X 15''	a						
	17	R7-1D	NO PARKING ANY TIME	12'' X 18''	a		TWT	1	WS	P	
	18	R7-1D	NO PARKING ANY TIME	12'' X 18''	a		TWT	1	WS	P	
	19	R7-1D	NO PARKING ANY TIME	12'' X 18''	a		TWT	1	WS	P	
	20	R5-1	DO NOT ENTER	30'' X 30''	a		TWT	1	WS	T	
17	1	R1-1	STOP	30'' X 30''	a		TWT	1	WS	T	
	2	R6-1R	ONE WAY (RIGHT)	54'' X 18''	a		10 BWG	1	SA	T	
	3	R1-1	STOP	30'' X 30''	a		TWT	1	WS	T	
	4	R6-1R	ONE WAY (RIGHT)	54'' X 18''	a		TWT	1	WS	T	
	5	E5-1A	EXIT GORE	78'' X 60''		a	S80	2	SA	P	
			59			a					
	6	R1-1	STOP	30'' X 30''	a		TWT	1	WS	T	
	7	R6-1R	ONE WAY (RIGHT)	54'' X 18''	a		10 BWG	1	SA	T	
	8	R6-1R	ONE WAY (RIGHT)	54'' X 18''	a		10 BWG	1	SA	T	
	9	R1-1	STOP	30'' X 30''	a		TWT	1	WS	T	
	10	R2-1	SPEED LIMIT XX	48'' X 60''	a		S80	1	SA	T	
18	1	R2-1	SPEED LIMIT XX	48'' X 60''	a		S80	1	SA	T	
	2	R6-1R	ONE WAY (RIGHT)	54'' X 18''	a		10 BWG	1	SA	T	
	3	R1-1	STOP	30'' X 30''	a		TWT	1	WS	T	
	4	M3-3B	SOUTH	36'' X 18''	a		10 BWG	1	SA	P	
		M1-1	INTERSTATE 35W	45'' X 36''	a						
19	1	R6-1R	ONE WAY (RIGHT)	54'' X 18''	a		10 BWG	1	SA	T	

ALUMINUM SIGN BLANKS (TYPE A)

Square Ft.	Min. Thickness
Less than 7.5	0.080"
7.5 to 15	0.100"
Greater than 15	0.125"

Sign supports shall be located as shown on the plans, except that the Engineer may shift the sign supports, within design guidelines, where necessary to secure a more desirable location or to avoid conflict with utilities. Unless otherwise shown on the plans, the Contractor shall stake and the Engineer will verify all sign support locations.

SUMMARY OF SMALL SIGNS

SOSS

©TxDOT May 1987

DN: TxDOT	CK: TxDOT	DW: TxDOT	CK: TxDOT	REVISIONS
11-93	7-02	8-95	2-07	1-02	9-08

DIST	COUNTY	CONT	SECT	JOB	HIGHWAY
FTW	TARRANT	0014	16	255, ETC.	IH35W

SHEET NO. 168

DATE: 7/13/2012 1:47:28 PM
FILE: S3BSIGNSSUM00.dgn

DISCLAIMER: The use of this standard is governed by the "Texas Engineering Practice Act". No warranty of any kind is made by TxDOT for any purpose whatsoever. TxDOT assumes no responsibility for the conversion of this standard to other formats or for incorrect results or damages resulting from its use.

SUMMARY OF SMALL SIGNS

SM RD SGN ASSM TY XXXXX(X)XX(X-XXXX)

PLAN SHEET NO.	SIGN NO.	SIGN NOMENCLATURE	SIGN TEXT	DIMENSIONS	ALUMINUM TYPE A	ALUMINUM TYPE G	Post Type FRP = Fiberglass TWT = Thin-Wall 10BWG = 10 BWG S80 = Sch 80	Posts (1 or 2)	Anchor Type UA=Univer-Conc UB=Univer-Bolt SA=Slip-Conc SB=Slip-Bolt WS=Wedge Steel WP=Wedge Plastic	Mounting Designation P = Prefab. "Plain" T = Prefab. "T" U = Prefab. "U"	1EXT or 2EXT = # of Ext. BM = Extruded Wind Beam WC = 1.12 #/ft Wing Chan. EXAL= Extruded Aluminum
19	2	R1-1	STOP	30'' X 30''	a		TWT	1	WS	T	
	3	R1-1	STOP	30'' X 30''	a		TWT	1	WS	T	
		D3-1	FOSSIL CREEK BLVD	60" X 08''	a						
	4	D10-2	MILEPOST	12'' X 36''	a		TWT	1	WS	P	
			58		a						
		D10-2	MILEPOST	12'' X 36''	a						
			58		a						
	5	R3-33	RIGHT LANE MUST EXIT	78'' X 36''	a		S80	1	SA	T	
20	1	W4-1L	MERGE SIGN	48'' X 48''	a		10 BWG	1	SA	T	
	2	W4-1L	MERGE SIGN	48'' X 48''	a		10 BWG	1	SA	T	
21	1	M3-1	NORTH	24'' X 12''	a		10 BWG	1	SA	T	
		M1-4	81	24'' X 24''	a						
		M3-1	NORTH	24'' X 12''	a						
		M1-4	287	30'' X 24''	a						
22	1	W4-3R	ADDED RIGHT LANE (SYMBOL)	48'' X 48''	a		10 BWG	1	SA	T	
	2	W1-8R	CHEVRON ALIGNMENT RIGHT	36'' X 48''	a		10 BWG	1	SA	T	
	3	W1-8R	CHEVRON ALIGNMENT RIGHT	36'' X 48''	a		10 BWG	1	SA	T	
	4	W1-8R	CHEVRON ALIGNMENT RIGHT	36'' X 48''	a		10 BWG	1	SA	T	
	5	W1-8R	CHEVRON ALIGNMENT RIGHT	36'' X 48''	a		10 BWG	1	SA	T	
	6	W8-13T	WATCH FOR ICE ON BRIDGE	48'' X 48''	a		10 BWG	1	SA	T	
	7	W8-13T	WATCH FOR ICE ON BRIDGE	48'' X 48''	a		10 BWG	1	SA	T	
	8	W4-1L	MERGE SIGN	48'' X 48''	a		10 BWG	1	SA	T	
	9	M4-15	TOLL	60'' X 12''		a	S80	2	SA	P	
		E5-1	EXIT GORE SIGN	60'' X 66''		a					

ALUMINUM SIGN BLANKS (TYPE A)

Square Ft.	Min. Thickness
Less than 7.5	0.080"
7.5 to 15	0.100"
Greater than 15	0.125"

Sign supports shall be located as shown on the plans, except that the Engineer may shift the sign supports, within design guidelines, where necessary to secure a more desirable location or to avoid conflict with utilities. Unless otherwise shown on the plans, the Contractor shall stake and the Engineer will verify all sign support locations.

SUMMARY OF SMALL SIGNS

SOSS

©TxDOT MAY 1987

REVISIONS
DN:-TxDOT 11-93 7-02
CK:-TxDOT 8-95 2-07
DW:-TxDOT 1-02 9-08
CK:-TxDOT

DIST	COUNTY	CONT	SECT	JOB	HIGHWAY
FTW	TARRANT	0014	16	255, ETC.	IH35W

SHEET NO. 169

1R

SUMMARY OF LARGE SIGNS

PLAN SHEET NO.	SIGN NO.	SIGN BACK-GROUND COLOR	SIGN TEXT	SIGN DIMENSIONS	PLAQUES, & OTHER ATTACHMENTS: DIRECT APPLY	PLAQUES, & OTHER ATTACHMENTS: ✳ ALUMINUM (TYPE A)	BACKGROUND SUBSTRATE (SQ FT): GROUND MOUNT (TYPE G)	BACKGROUND SUBSTRATE (SQ FT): OVERHEAD (TYPE O)	TYPE OF MOUNT	"X" DIMENSION ◒: post 1	"X" DIMENSION ◒: post 2	"X" DIMENSION ◒: post 3	GALVANIZED STRUCTURAL STEEL: SIZE	GALVANIZED STRUCTURAL STEEL: LINEAR FEET post 1	GALVANIZED STRUCTURAL STEEL: LINEAR FEET post 2	GALVANIZED STRUCTURAL STEEL: LINEAR FEET post 3	GALVANIZED STRUCTURAL STEEL: TOTAL WEIGHT LBS.	DRILLED SHAFT: LINEAR FEET REINFORCED 24"ϕ	30"ϕ	36"ϕ	42"ϕ	48"ϕ	54"ϕ
1	1	Green	EXIT 62	84 x 30				17.50															
			TxTag, Tolltag, PAY BY Mail			27																	
			TOLL LANE																				
			820 TOLL EAST		9																		
			1 MILE																				
			LEFT LANE	156 x 144				156.00	OSB #1														
1	2	Green	EXIT 60	90 x 30				18.75															
			North																				
			US 81 US 287 North		16.5																		
			Decatur																196				
			1 1/4 Miles	138 x 150				143.75	OSB #1														
1	3	Green	EXIT 62	84 x 30				17.50															
			TxTag, Tolltag, PAY BY Mail			27																	
			TOLL LANE																				
			820 TOLL EAST		9				COSS #1												26		
			LEFT LANE	156 x 120				130.00															
1	4	Green	EXIT 62	84 x 30				17.50															
			TxTag, Tolltag, PAY BY Mail			27																	
			TOLL LANE																				
			820 TOLL EAST		9				COSS #2												36		
			LEFT LANE	156 x 120				130.00															
1	5	Green	EXIT 60	90 x 30				18.75															
			US 81 US 287 North		16.5																		
			Decatur																110				
			1/2 MILE	216 x 120				180.00	OSB #2														
2	6	Green	EXIT 62	84 x 30				17.50															
			TxTag, Tolltag, PAY BY Mail			27																	
			TOLL LANE																				
			820 TOLL EAST		9				OSB #2A											108			
				156 x 168				182.00															
			LEFT LANE																				
3	7	Green	EXIT 60	90 x 30				18.75															
			US 81 US 287 North		16.5																		
			Decatur						COSS #4														
			EXIT ↗ ONLY	216 x 126				189.00															28
3	8	Green	EXIT 61	84 x 30				17.50															
			North Tarrant																				
			Pkwy						COSS #5														
			EXIT ↗ ONLY	210 x 108				157.50															27
4	9	Green	EXIT 59	84 x 30			17.50																
			Basswood																				
			Blvd																				
			3/4 MILE	192 x 120			160.00		GM #1	4.5	6.1		W8X18	21.5	23.1		846.4	16		39			
5	10	Green	EXIT 61	84 x 30				17.50															
			North Tarrant																				
			Pkwy						COSS #9														
			1/2 MILE	210 x 102				148.75														23	
				PAGE TOTALS		108.00	177.50	1578.25								PAGE TOTALS	846.40	16	306	108	62	23	55

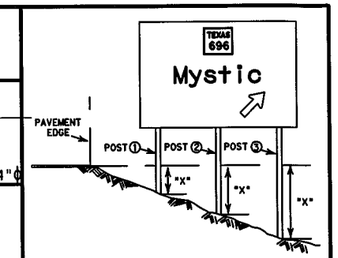

◒ The "X" dimension is the elevation difference at the post between the ground and the edge of pavement or top of curb.

Sign supports shall be located as shown on the plans, except that the Engineer may shift the sign supports, within design guidelines, where necessary to secure a more desirable location or to avoid conflict with utilities. Unless otherwise shown on the plans, the Contractor shall stake and the Engineer will verify all sign support locations.

The post lengths listed here are approximations, The corrected post lengths will be furnished by the Contractor after the stud posts are placed.

Tower heights shall be verified with the Engineer before fabrication.

✳ This column is for aluminum Type A and not direct apply. Direct apply is subsidiary to the sign.

SIGN TYPE

SIGN TYPE 1 3 0

- Wind Design Zone
- Series No.
  - 0 Aluminum/Fiberglass
  - 1 Aluminum
  - 2 Fiberglass
- No. of Posts

See sheet SMD(8W1)

SUMMARY OF LARGE SIGNS

SOLS

© TxDOT May 1987

DN.: TxDOT CK.: TxDOT DW.: TxDOT CK.: TxDOT — REVISIONS 11-93 8-95 5-01 1-04 9-08

CONT	SECT	JOB	HIGHWAY
0014	16	255, ETC.	IH35W
DIST		COUNTY	SHEET NO.
FTW		TARRANT	170

DISCLAIMER: The use of this standard is governed by the "Texas Engineering Practice Act". No warranty of any kind is made by TxDOT for any purpose whatsoever. TxDOT assumes no responsibility for the conversion of this standard to other formats or for incorrect results or damages resulting from its use.

DATE: 7/31/2012 3:39:01 PM
FILE: S3BSIGNSSUM00.dgn

SUMMARY OF LARGE SIGNS

PLAN SHEET NO.	SIGN NO.	SIGN BACK-GROUND COLOR	SIGN TEXT	SIGN DIMENSIONS	PLAQUES, & OTHER ATTACHMENTS: DIRECT APPLY	PLAQUES, & OTHER ATTACHMENTS: * ALUMINUM (TYPE A)	BACKGROUND SUBSTRATE (SQ FT): GROUND MOUNT (TYPE G)	BACKGROUND SUBSTRATE (SQ FT): OVERHEAD (TYPE O)	TYPE OF MOUNT	"X" DIMENSION ⊖: post 1	"X" DIMENSION ⊖: post 2	"X" DIMENSION ⊖: post 3	GALVANIZED STRUCTURAL STEEL: SIZE	GALVANIZED STRUCTURAL STEEL: LINEAR FEET post 1	GALVANIZED STRUCTURAL STEEL: LINEAR FEET post 2	GALVANIZED STRUCTURAL STEEL: LINEAR FEET post 3	GALVANIZED STRUCTURAL STEEL: TOTAL WEIGHT LBS.	DRILLED SHAFT: LINEAR FEET REINFORCED 24"Φ	30"Φ	36"Φ	42"Φ	48"Φ	54"Φ
6	11	Green	EXIT 59 TO IH 35W NORTH Basswood Blvd 1/2 MILE	84 x 30 276 x 144	9		17.50 276.00		GM #4	4.5	5.8	7.2	W8X18	23.5	24.8	26.2	1406.4	21					
6	12	Green	TxTag, Tolltag, PAY BY Mail TOLL LANE 820 TOLL EAST ENTRANCE 1 MILE	210 x 120	9	27	175.00		GM #3	4.5	6.3		W8X18	21.5	23.3		850.0	16					
7	13	Green	Keller NEXT 3 EXITS	144 x 66			66.00		GM #5	4.5	5.7		W6X9	17.0	18.2		383.2	12					
7	14	Green	Texas Motor Speedway EXIT 70	162 x 90			101.25		GM #6	4.5	5.9		W6X12	19.0	20.4		553.4	10					
8	15	Green	EXIT 59 Basswood Blvd 1/4 MILE EXIT ↓ ONLY ↓	84 x 30 264 x 102				17.50 187.00	COSS #10														22
9	16	Green	TOLL LANE US 81 US 287 North Decatur EXIT ONLY ↗	216 x 150	16.5			225.00	COSS #11														29
9	17	Green	EXIT 61 North Tarrant Pkwy 1 MILE	84 x 30 210 x 102				17.50 148.75	COSS #12														32
9	18	Green	EXIT 59 Basswood Blvd EXIT ↓ ONLY ↓	84 x 30 264 x 78				17.50 143.00	COSS #13														32
			PAGE TOTALS			27.00	635.75	756.25									3193.0	59					115

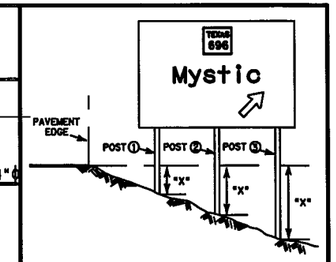

⊖ The "X" dimension is the elevation difference at the post between the ground and the edge of pavement or top of curb.

Sign supports shall be located as shown on the plans, except that the Engineer may shift the sign supports, within design guidelines, where necessary to secure a more desirable location or to avoid conflict with utilities. Unless otherwise shown on the plans, the Contractor shall stake and the Engineer will verify all sign support locations.

The post lengths listed here are approximations, The corrected post lengths will be furnished by the Contractor after the stud posts are placed.

Tower heights shall be verified with the Engineer before fabrication.

* This column is for aluminum Type A and not direct apply. Direct apply is subsidiary to the sign.

SIGN TYPE

SIGN TYPE 1 3 0
- Wind Design Zone
- Series No.: 0 Aluminum/Fiberglass; 1 Aluminum; 2 Fiberglass
- No. of Posts

See sheet SMD(8W1)

DISCLAIMER: The use of this standard is governed by the "Texas Engineering Practice Act". No warranty of any kind is made by TxDOT for any purpose whatsoever. TxDOT assumes no responsibility for the conversion of this standard to other formats or for incorrect results or damages resulting from its use.

DATE: 7/13/2012 1:47:29 PM
FILE: S3BSIGNSSUM00.dgn

SUMMARY OF LARGE SIGNS

SOLS

© TxDOT May 1987

DN.: TxDOT	11-93	REVISIONS 1-04
CK.: TxDOT	8-95	9-08
DW.: TxDOT	5-01	
CK.: TxDOT		

CONT	SECT	JOB	HIGHWAY
0014	16	255, ETC.	IH35W
DIST		COUNTY	SHEET NO.
FTW		TARRANT	171

SUMMARY OF LARGE SIGNS

PLAN SHEET NO.	SIGN NO.	SIGN BACK-GROUND COLOR	SIGN TEXT	SIGN DIMENSIONS	PLAQUES, & OTHER ATTACHMENTS: DIRECT APPLY	PLAQUES, & OTHER ATTACHMENTS: * ALUMINUM (TYPE A)	BACKGROUND SUBSTRATE (SQ FT): GROUND MOUNT (TYPE G)	BACKGROUND SUBSTRATE (SQ FT): OVERHEAD (TYPE O)	TYPE OF MOUNT	"X" DIMENSION ⊖: post 1	"X" DIMENSION ⊖: post 2	"X" DIMENSION ⊖: post 3	GALVANIZED STRUCTURAL STEEL: SIZE	GALVANIZED STRUCTURAL STEEL: LINEAR FEET post 1	GALVANIZED STRUCTURAL STEEL: LINEAR FEET post 2	GALVANIZED STRUCTURAL STEEL: LINEAR FEET post 3	GALVANIZED STRUCTURAL STEEL: TOTAL WEIGHT LBS.	DRILLED SHAFT: LINEAR FEET REINFORCED 24"Φ	30"Φ	36"Φ	42"Φ	48"Φ	54"Φ
9	19	Green	TxTag, Tolltag, PAY BY Mail TOLL LANE 820 TOLL EAST 1/2 MILE LEFT ENTRANCE	210 x 156	9	27	227.50		GM #7	4.5	6.3		W8X21	24.5	26.3		1156.2	14					
10	20	Green	EXIT 60 US 81 US 287 North Decatur EXIT ↗ ONLY ↗	90 x 30 264 x 126	16.5			18.75 231.00	COSS #14														33
10	21	Green	TxTag, Tolltag, PAY BY Mail TOLL LANE 820 TOLL EAST 1/4 MILE LEFT ENTRANCE	210 x 156	9	27	227.50		GM #8	4.5	6.3		W8X21	24.5	26.3		1156.2	19					
11	22	Green	Wichita Falls EXIT 60	174 x 66			79.75		GM #9	4.5	6.0		W6X9	17.0	18.5		385.9	9					
11	23	Green	EXIT 58 Western Center Blvd EXIT ↓ ONLY	84 x 30 180 x 108				17.50 135.00	COSS #15													22	
11	24	Green	TOLL LANE US 81 US 287 North Decatur EXIT ↓ ONLY	216 x 150	16.5			225.00	COSS #16												24		
11	25	Green	TxTag, Tolltag, PAY BY Mail TOLL LANE 820 TOLL EAST ↖ LEFT LANE	138 x 168	9	27		161.00	OSB #4											146			
12	26	Green	EXIT 60 US 81 US 287 North Decatur EXIT ↓ ONLY ↓	90 x 30 264 x 126	16.5			18.75 231.00	COSS #17														17
13	27	Green	EXIT 58 Western Center Blvd EXIT ↗ ONLY	84 x 30 180 x 108				17.50 135.00	COSS #18												15		
13	28	Green	TOLL LANE US 81 US 287 North Decatur EXIT 1 MILE	216 x 144	16.5			216.00	COSS #19														16
				PAGE TOTALS		81.00	534.75	1406.50									2698.3	40		146	39	22	66

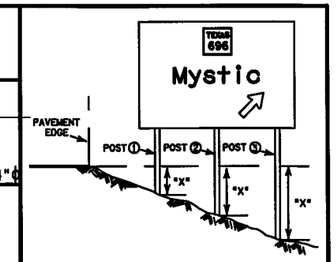

⊖ The "X" dimension is the elevation difference at the post between the ground and the edge of pavement or top of curb.

Sign supports shall be located as shown on the plans, except that the Engineer may shift the sign supports, within design guidelines, where necessary to secure a more desirable location or to avoid conflict with utilities. Unless otherwise shown on the plans, the Contractor shall stake and the Engineer will verify all sign support locations.

The post lengths listed here are approximations, The corrected post lengths will be furnished by the Contractor after the stud posts are placed.

Tower heights shall be verified with the Engineer before fabrication.

* This column is for aluminum Type A and not direct apply. Direct apply is subsidiary to the sign.

SIGN TYPE

SIGN TYPE 1 3 0
- Wind Design Zone
- Series No.
  - 0 Aluminum/Fiberglass
  - 1 Aluminum
  - 2 Fiberglass
- No. of Posts

See sheet SMD(SW1)

DISCLAIMER: The use of this standard is governed by the "Texas Engineering Practice Act". No warranty of any kind is made by TxDOT for any purpose whatsoever. TxDOT assumes no responsibility for the conversion of this standard to other formats or for incorrect results or damages resulting from its use.

DATE: 7/13/2012 1:47:29 PM
FILE: S3BSIGNSSUM00.dgn

SUMMARY OF LARGE SIGNS

SOLS

© TxDOT May 1987

		REVISIONS
DN.: TxDOT	11-93	1-04
CK.: TxDOT	8-95	9-08
DW.: TxDOT	5-01	
CK.: TxDOT		

CONT	SECT	JOB	HIGHWAY
0014	16	255, ETC.	IH35W
DIST		COUNTY	SHEET NO.
FTW		TARRANT	172

SUMMARY OF LARGE SIGNS

PLAN SHEET NO.	SIGN NO.	SIGN BACK-GROUND COLOR	SIGN TEXT	SIGN DIMENSIONS	PLAQUES, & OTHER ATTACHMENTS: DIRECT APPLY	PLAQUES, & OTHER ATTACHMENTS: ✳ ALUMINUM (TYPE A)	BACKGROUND SUBSTRATE (SQ FT): GROUND MOUNT (TYPE G)	BACKGROUND SUBSTRATE (SQ FT): OVERHEAD (TYPE O)	TYPE OF MOUNT	"X" DIMENSION ⊖: post 1	"X" DIMENSION ⊖: post 2	"X" DIMENSION ⊖: post 3	GALVANIZED STRUCTURAL STEEL: SIZE	GALVANIZED STRUCTURAL STEEL: LINEAR FEET post 1	GALVANIZED STRUCTURAL STEEL: LINEAR FEET post 2	GALVANIZED STRUCTURAL STEEL: LINEAR FEET post 3	GALVANIZED STRUCTURAL STEEL: TOTAL WEIGHT LBS.	DRILLED SHAFT: LINEAR FEET REINFORCED 24"Φ	DRILLED SHAFT: 30"Φ	DRILLED SHAFT: 36"Φ	DRILLED SHAFT: 42"Φ	DRILLED SHAFT: 48"Φ	DRILLED SHAFT: 54"Φ
14	29	Green	EXIT 60 US 81 US 287 North Decatur 1 MILE	90 x 30 216 x 120	16.5			18.75 180.00	COSS #20														27
15	30	Green	TOLL LANE Basswood Blvd EXIT ↗ ONLY	156 x 132				143.00	COSS #21												56		
15	31	Green	EXIT 59 Basswood Blvd EXIT ↗ ONLY	84 x 30 156 x 108				17.50 117.00	COSS #22													29	
15	32	Green	HM MUST FOLLOW IH 820	216 x 96			144.00		GM #10	4.5	5.6	6.6	W6X12	19.5	20.6	21.6	861.3	23					
17	33	Green	TOLL LANE Basswood Blvd 1/2 MILE	156 x 126				136.50	MNT WITH DMS														
17	34	Green	EXIT 57A, Hazardous Material IH 820 East 1 MILE LEFT EXIT	108 x 30 144 x 126	9	9		22.50 126.00	OSB #5														
17	35	Green	Hazardous Material, EXIT 57B IH 820 West EXIT ↓ ONLY	108 x 30 150 x 102	9	9		22.50 106.25	OSB #5											88			
17	36	Green	EXIT 59 Basswood Blvd EXIT ↓ ONLY	84 x 30 156 x 108				17.50 117.00	COSS #24														
17	37	Green	EXIT 58 Western Center Blvd (Right 45* Arrow)	84 x 30 180 x 120				17.50 150.00	COSS #24														23
18	38	Green	Meacham Airport EXIT 57B	132 x 96			88.00		GM #11	2.5	3.6		W6X9	17.5	18.6		391.3	10					
				PAGE TOTALS		18.00	232.00	1192.00									1252.6	33	88		56	29	50

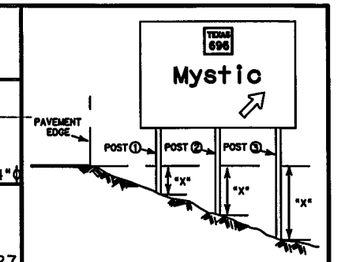

⊖ The "X" dimension is the elevation difference at the post between the ground and the edge of pavement or top of curb.

Sign supports shall be located as shown on the plans, except that the Engineer may shift the sign supports, within design guidelines, where necessary to secure a more desirable location or to avoid conflict with utilities. Unless otherwise shown on the plans, the Contractor shall stake and the Engineer will verify all sign support locations.

The post lengths listed here are approximations, The corrected post lengths will be furnished by the Contractor after the stud posts are placed.

Tower heights shall be verified with the Engineer before fabrication.

✳ This column is for aluminum Type A and not direct apply. Direct apply is subsidiary to the sign.

SIGN TYPE

SIGN TYPE 1 3 0
- Wind Design Zone
- Series No.
  - 0 Aluminum/Fiberglass
  - 1 Aluminum
  - 2 Fiberglass
- No. of Posts

See sheet SMD(BW1)

DISCLAIMER: The use of this standard is governed by the "Texas Engineering Practice Act". No warranty of any kind is made by TxDOT for any purpose whatsoever. TxDOT assumes no responsibility for the conversion of this standard to other formats or for incorrect results or damages resulting from its use.

DATE: 7/13/2012 1:47:29 PM
FILE: S3BSIGNSSUM00.dgn

SUMMARY OF LARGE SIGNS

SOLS

© TxDOT May 1987

		REVISIONS
DN.:-TxDOT	11-93	1-04
CK.:-TxDOT	8-95	9-08
DN.:-TxDOT	5-01	
CK.:-TxDOT		

CONT	SECT	JOB	HIGHWAY
0014	16	255, ETC.	IH35W
DIST		COUNTY	SHEET NO.
FTW		TARRANT	173

SUMMARY OF LARGE SIGNS

PLAN SHEET NO.	SIGN NO.	SIGN BACK-GROUND COLOR	SIGN TEXT	SIGN DIMENSIONS	PLAQUES, & OTHER ATTACHMENTS: DIRECT APPLY	PLAQUES, & OTHER ATTACHMENTS: * ALUMINUM (TYPE A)	BACKGROUND SUBSTRATE (SQ FT): GROUND MOUNT (TYPE G)	BACKGROUND SUBSTRATE (SQ FT): OVERHEAD (TYPE O)	TYPE OF MOUNT	"X" DIMENSION ⊖: post 1	"X" DIMENSION ⊖: post 2	"X" DIMENSION ⊖: post 3	GALVANIZED STRUCTURAL STEEL: SIZE	GALVANIZED STRUCTURAL STEEL: LINEAR FEET post 1	GALVANIZED STRUCTURAL STEEL: LINEAR FEET post 2	GALVANIZED STRUCTURAL STEEL: LINEAR FEET post 3	GALVANIZED STRUCTURAL STEEL: TOTAL WEIGHT LBS.	DRILLED SHAFT: LINEAR FEET REINFORCED 24"Φ	30"Φ	36"Φ	42"Φ	48"Φ	54"Φ
19	39	Green	Texas Motor Speedway EXIT 70	162 x 90			101.25		GM #12	2.5	3.9		W6X9	17.0	18.4		385.0	13					
18	40	Green	EXIT 57A, Hazardous Material IH 820 East LEFT EXIT	108 x 30 144 x 102	9	9		22.50 102.00	OSB #6														
18	41	Green	Hazardous Material, EXIT 57B IH 820 West EXIT ↓ ONLY	108 x 30 150 x 102	9	9		22.50 106.25	OSB #6										108				
19	42	Green	TOLL LANE Basswood Blvd EXIT 1 MILE	156 x 126				136.50	COSS #25													37	
19	43	Green	EXIT 58 Western Center Blvd 1/2 MILE	84 x 30 180 x 102				17.50 127.50	COSS #26													29	
20	44	Green	EXIT 58 Western Center Blvd 1 MILE	84 x 30 228 x 120			17.50 190.00		GM #13	4.5	5.6	6.7	W6X15	21.5	22.6	23.7	1070.4	21					
21	45	Green	TxTag, Tolltag, PAY BY Mail TOLL LANE 820 TOLL EAST 1 MILE LEFT LANE	138x 144	9	27		138.00	COSS #6												21		
21	46	Green	TxTag, Tolltag, PAY BY Mail TOLL LANE 820 TOLL EAST LEFT LANE	138 x 120	9	27		115.00	COSS #7												24		
21	47	Green	TxTag, Tolltag, PAY BY Mail TOLL LANE 820 TOLL EAST LEFT LANE	138 x 120	9	27		115.00	COSS #8												26		
			PAGE TOTALS			99.00	308.75	902.75									1455.4	34	108		71	66	

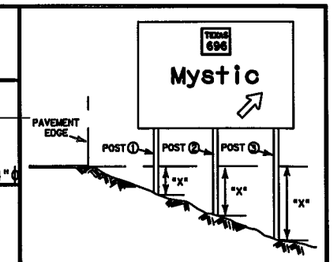

⊖ The "X" dimension is the elevation difference at the post between the ground and the edge of pavement or top of curb.

Sign supports shall be located as shown on the plans, except that the Engineer may shift the sign supports, within design guidelines, where necessary to secure a more desirable location or to avoid conflict with utilities. Unless otherwise shown on the plans, the Contractor shall stake and the Engineer will verify all sign support locations.

The post lengths listed here are approximations, The corrected post lengths will be furnished by the Contractor after the stud posts are placed.

Tower heights shall be verified with the Engineer before fabrication.

* This column is for aluminum Type A and not direct apply. Direct apply is subsidiary to the sign.

SIGN TYPE

SIGN TYPE 1 3 0

- Wind Design Zone
- Series No.
  - 0 Aluminum/Fiberglass
  - 1 Aluminum
  - 2 Fiberglass
- No. of Posts

See sheet SMD(8W1)

DISCLAIMER: The use of this standard is governed by the "Texas Engineering Practice Act". No warranty of any kind is made by TxDOT for any purpose whatsoever. TxDOT assumes no responsibility for the conversion of this standard to other formats or for incorrect results or damages resulting from its use.

DATE: 7/13/2012 1:47:29 PM
FILE: S3BSIGNSSUM00.dgn

SUMMARY OF LARGE SIGNS

SOLS

© TxDOT May 1987

		REVISIONS
DN.:-TxDOT		
CK.:-TxDOT	11-93	1-04
DW.:-TxDOT	8-95	9-08
CK.:-TxDOT	5-01	

CONT	SECT	JOB	HIGHWAY
0014	16	255, ETC.	IH35W
DIST		COUNTY	SHEET NO.
FTW		TARRANT	174

SUMMARY OF LARGE SIGNS

PLAN SHEET NO.	SIGN NO.	SIGN BACK-GROUND COLOR	SIGN TEXT	SIGN DIMENSIONS	PLAQUES, & OTHER ATTACHMENTS: DIRECT APPLY	PLAQUES, & OTHER ATTACHMENTS: ✱ ALUMINUM (TYPE A)	BACKGROUND SUBSTRATE (SQ FT): GROUND MOUNT (TYPE G)	BACKGROUND SUBSTRATE (SQ FT): OVERHEAD (TYPE O)	TYPE OF MOUNT	"X" DIMENSION ⊖: post ①	"X" DIMENSION ⊖: post ②	"X" DIMENSION ⊖: post ③	GALVANIZED STRUCTURAL STEEL: SIZE	GALVANIZED STRUCTURAL STEEL: LINEAR FEET post ①	GALVANIZED STRUCTURAL STEEL: LINEAR FEET post ②	GALVANIZED STRUCTURAL STEEL: LINEAR FEET post ③	GALVANIZED STRUCTURAL STEEL: TOTAL WEIGHT LBS.	DRILLED SHAFT: LINEAR FEET REINFORCED 24"Φ	DRILLED SHAFT: LINEAR FEET REINFORCED 30"Φ	DRILLED SHAFT: LINEAR FEET REINFORCED 36"Φ	DRILLED SHAFT: LINEAR FEET REINFORCED 42"Φ	DRILLED SHAFT: LINEAR FEET REINFORCED 48"Φ	DRILLED SHAFT: LINEAR FEET REINFORCED 54"Φ
21	48	Green	Harmon Rd EXIT 1/2 MILE	174 x 72			87.00		GM #2	6.5	8.0		W6X12	19.5	21.0		566.6	13					
22	49	Green	TxTag, Tolltag, PAY BY Mail TOLL LANE 820 TOLL EAST LEFT LANE	138 x 168	9	27		161.00	OSB #3														
22	50	Green	IH 35W SOUTH (Double 45* Arrows)	162 x 108	9			121.50	OSB #3										106				
			PAGE TOTALS			27.00	87.00	282.50									566.60	13	106				

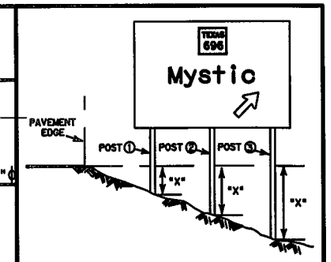

⊖ The "X" dimension is the elevation difference at the post between the ground and the edge of pavement or top of curb.

Sign supports shall be located as shown on the plans, except that the Engineer may shift the sign supports, within design guidelines, where necessary to secure a more desirable location or to avoid conflict with utilities. Unless otherwise shown on the plans, the Contractor shall stake and the Engineer will verify all sign support locations.

The post lengths listed here are approximations, The corrected post lengths will be furnished by the Contractor after the stud posts are placed.

Tower heights shall be verified with the Engineer before fabrication.

✱ This column is for aluminum Type A and not direct apply. Direct apply is subsidiary to the sign.

SIGN TYPE

SIGN TYPE 1 3 0
- Wind Design Zone
- Series No.
- 0 Aluminum/Fiberglass
- 1 Aluminum
- 2 Fiberglass
- No. of Posts

See sheet SMD(8W1)

SUMMARY OF LARGE SIGNS

SOLS

© TxDOT May 1987

DN.: TxDOT	REVISIONS
CK.: TxDOT	11-93 1-04
DW.: TxDOT	8-95 9-08
CK.: TxDOT	5-01

CONT	SECT	JOB	HIGHWAY
0014	16	255, ETC.	IH35W
DIST		COUNTY	SHEET NO.
FTW		TARRANT	175

DISCLAIMER: The use of this standard is governed by the "Texas Engineering Practice Act". No warranty of any kind is made by TxDOT for any purpose whatsoever. TxDOT assumes no responsibility for the conversion of this standard to other formats or for incorrect results or damages resulting from its use.

DATE: 7/13/2012 1:47:29 PM
FILE: S3BSIGNSSUM00.dgn