FED. RD. DIV. NO.	FEDERAL AID PROJECT NO.		SHEET NO.
6	IM 0335(151)		1131
STATE	STATE DIST.	COUNTY	
TEXAS	2	TARRANT	
CONT.	SECT.	JOB	HIGHWAY NO.
0014	16	255, ETC	IH 35W

STATE OF TEXAS
DEPARTMENT OF TRANSPORTATION

PLANS OF PROPOSED
STATE HIGHWAY IMPROVEMENT

FEDERAL AID PROJECT: IM 0335(151)

TARRANT COUNTY

IH-35W (URBAN FREEWAY)

VOLUME 4

LIMITS: FROM NORTH TARRANT PARKWAY TO IH 820

NET LENGTH OF PROJECT = 18,900.00 FT = 3.580 MI.

FUNCTIONAL CLASS: URBAN FREEWAY
DESIGN SPEED: 70 MPH MANAGED/GENERAL PUROOSE LANES
45 MPH RAMPS & MANAGED LANE RAMPS
40-45 MPH DIRECT CONNECTORS
40 MPH FRONTAGE ROADS
35 MPH CROSS STREETS

ADT	2010	2030
NORTH TARRANT PKWY TO US 287 SPLIT	115,100	178,700
US 287 SPLIT TO IH 820	174,900	269,800

INDEX OF SHEETS

SHEET NO.	DESCRIPTION
1	TITLE SHEET
2	INDEX OF SHEETS

TDLR INSPECTION REQUIRED

LOCATION	ROADWAY	BRIDGE	TOTAL
CSJ 0014-16-255	13,860.99 FT = 2.626 MI.	576.91 FT = 0.109 MI.	14,437.90 FT = 2.735 MI.
CSJ 0081-12-045	4,462.10 FT = 0.845 MI.	-	4,462.10 FT = 0.845 MI.
TOTAL	18,523.09 FT = 3.475 MI.	576.91 FT = 0.109 MI.	18,900.00 FT = 3.580 MI.
CSJ 0014-16-267	(ROW AND UTILITIES)	-	14,437.90 FT = 2.735 MI.

FOR THE CONSTRUCTION OF A FREEWAY FACILITY CONSISTING OF WIDENING, GRADING, DRAINAGE, STRUCTURES, SURFACE, AND STRIPING.

N

0 1 2
SCALE: 1" = 2 MILES

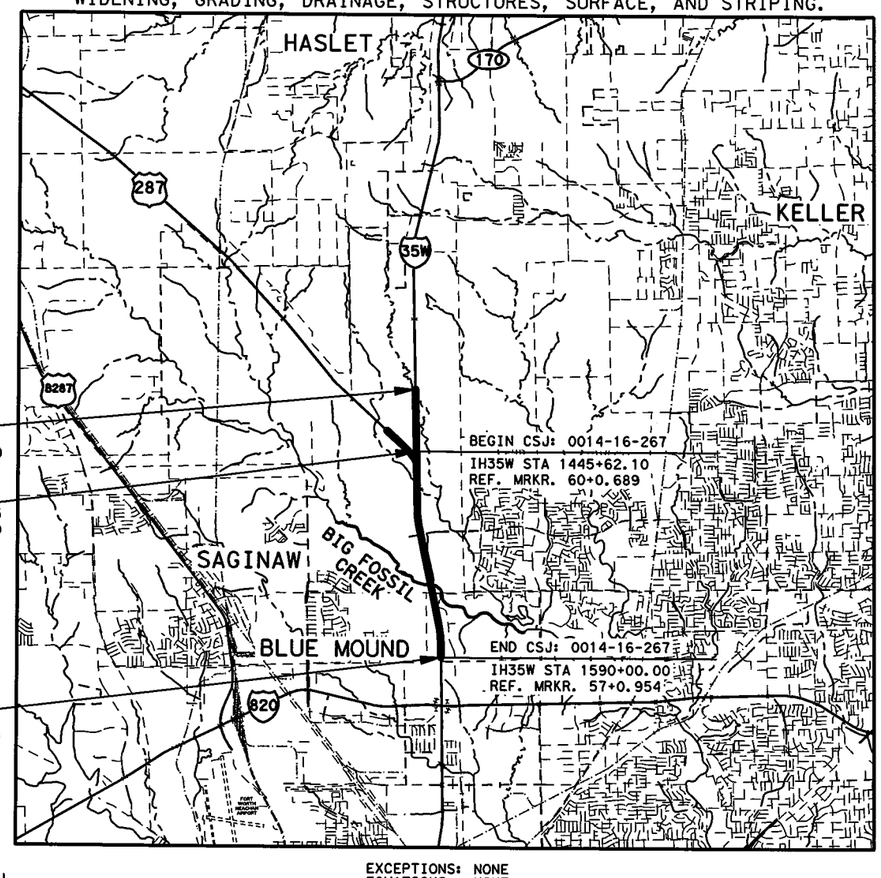

BEGIN PROJECT
CSJ: 0081-12-045
IH 35W STA 1401+00.00
REF. MRKR. 61+0.534

END CSJ: 0081-12-045
BEGIN CSJ: 0014-16-255
IH 35W STA 1445+62.10
REF. MRKR. 60+0.689

BEGIN CSJ: 0014-16-267
IH35W STA 1445+62.10
REF. MRKR. 60+0.689

END CSJ: 0014-16-267
IH35W STA 1590+00.00
REF. MRKR. 57+0.954

END PROJECT
CSJ: 0014-16-255
IH 35W STA 1590+00.00
REF. MRKR. 57+0.954

EXCEPTIONS: NONE
EQUATIONS: NONE
RAILROADS: NONE

FINAL PLANS

LETTING DATE: _____
DATE CONTRACTOR BEGAN WORK: _____
DATE WORK WAS COMPLETED & ACCEPTED: _____
FINAL CONTRACT COST: _____
CONTRACTOR: _____

STATE OF TEXAS — M. N. MOZAFFAR — 85191 — LICENSED PROFESSIONAL ENGINEER

STATE OF TEXAS — KURT W. AUNGST — 90848 — LICENSED PROFESSIONAL ENGINEER

I. S. ENGINEERS, LLC

KENNEDY CONSULTING

SUBMITTED BY 7/13/2012
M. N. M
PROJECT MANAGER

SUBMITTED BY 7/13/12
KA
DEPUTY PROJECT MANAGER

TEXAS DEPARTMENT OF TRANSPORTATION

SUBMITTED FOR LETTING
AREA ENGINEER

RECOMMENDED FOR LETTING
DISTRICT DESIGN ENGINEER

APPROVED FOR LETTING
DIRECTOR, TRAFFIC OPERATIONS DIVISION

RECOMMENDED FOR LETTING
DISTRICT ENGINEER

APPROVED FOR LETTING
DIRECTOR, DESIGN DIVISION

SPECIFICATIONS ADOPTED BY THE TEXAS DEPARTMENT OF TRANSPORTATION, JUNE 1, 2004 AND SPECIFICATION ITEMS LISTED AND DATED AS FOLLOWS, SHALL GOVERN ON THIS PROJECT: REQUIRED CONTRACT PROVISIONS FOR ALL FEDERAL-AID CONSTRUCTION CONTRACTS (FORM FHWA 1273, MARCH 1994).

DRAWING DATE: 7/13/2012 FILENAME: S3BTITLE04.dgn

COUNTY TARRANT PROJ. NO. _____
HWY. NO. _____ LETTING DATE _____
DATE ACCEPTED _____

©2012 by Texas Department of Transportation; all rights reserved.

SHEET NO.	DESCRIPTION

VOLUME I

I. GENERAL

1	TITLE SHEET
2-6	INDEX OF SHEETS
7	PROJECT LAYOUT KEY MAP
8-17	PROJECT LAYOUTS
18-23	TYPICAL SECTIONS - EXISTING
24-54	TYPICAL SECTIONS - PROPOSED
55, 55A-55C, 56	TYPICAL SECTIONS - MISCELLANEOUS DETAILS
57, 57A-57_	GENERAL NOTES
58, 58A-58_	ESTIMATE AND QUANTITY SUMMARY
59-91	QUANTITY SUMMARY - TRAFFIC CONTROL
92	QUANTITY SUMMARY - REMOVAL
93-97, 97A-97B	QUANTITY SUMMARY - PAVEMENT
98-100A	QUANTITY SUMMARY - EARTHWORK
101-102	QUANTITY SUMMARY - MANAGED LN & GEN PURPOSE LN - ROADWAY ITEMS
103	QUANTITY SUMMARY - DIRECT CONNECTOR & RAMP - ROADWAY ITEMS
104-105	QUANTITY SUMMARY - FRONTAGE ROAD - ROADWAY ITEMS
106	QUANTITY SUMMARY - CROSS STREET - ROADWAY ITEMS
107	DRIVEWAY & MISCELLANEOUS
108	QUANTITY SUMMARY - RETAINING WALL
109-126	SUMMARY OF DRAINAGE QUANTITIES
127	QUANTITY SUMMARY - EROSION CONTROL
128-132	QUANTITY SUMMARY - BRIDGES
133-135	QUANTITY SUMMARY - SIGN ASSEMBLIES
136-137, 137A-137B	QUANTITY SUMMARY - STRIPING ITEMS
138	QUANTITY SUMMARY - DELINEATION ITEMS
139-143	ILLUMINATION SUMMARY
144-149	ITS SUMMARY
150-154	TRAFFIC SIGNAL SUMMARY
155-159	UTILITY SUMMARY
160-169	SUMMARY OF SMALL SIGNS
170-175	SUMMARY OF LARGE SIGNS

VOLUME II

II. TRAFFIC CONTROL PLAN

176	TITLE SHEET
177-181	INDEX OF SHEETS
182-183, 183A	CONSTRUCTION SEQUENCE NARRATIVE
184-193	OVERALL CONSTRUCTION SEQUENCE LAYOUT
194	ADVANCE WARNING SIGNS
195-204	CONSTRUCTION SEQUENCE LAYOUT - PHASE 1 STEP 1
205-208	TCP SECTION - PHASE 1 STEP 1
209-232	TRAFFIC CONTROL PLAN - PHASE 1 STEP 1
233	DETOUR RAMP 35S-BB
234-243	CONSTRUCTION SEQUENCE LAYOUT - PHASE 1 STEP 2
244-247	TCP SECTION - PHASE 1 STEP 2
248-271	TRAFFIC CONTROL PLAN - PHASE 1 STEP 2
272	TCP SECTION - PHASE 1 STEP 2B
273-274, 274A	TRAFFIC CONTROL PLAN - PHASE 1 STEP 2B
275	DETOUR DC 35S-287W
276-285	CONSTRUCTION SEQUENCE LAYOUT - PHASE 1 STEP 3
286-289	TCP SECTION - PHASE 1 STEP 3
290-313	TRAFFIC CONTROL PLAN - PHASE 1 STEP 3
314-323	CONSTRUCTION SEQUENCE LAYOUT - PHASE 2 STEP 1
324-327	TCP SECTION - PHASE 2 STEP 1
328-351	TRAFFIC CONTROL PLAN - PHASE 2 STEP 1
352-353	TRAFFIC CONTROL PLAN - PHASE 2 STEP 1B
354-355	TRAFFIC CONTROL PLAN - PHASE 2 STEP 1C
356-365	CONSTRUCTION SEQUENCE LAYOUT - PHASE 2 STEP 2
366-369	TCP SECTION - PHASE 2 STEP 2
370-393	TRAFFIC CONTROL PLAN - PHASE 2 STEP 2
393A	TRAFFIC CONTROL PLAN - PHASE 2 STEP 2B
394	DETOUR RAMP 35N-WCB
395-404	CONSTRUCTION SEQUENCE LAYOUT - PHASE 2 STEP 3
405-408	TCP SECTION - PHASE 2 STEP 3
409-432	TRAFFIC CONTROL PLAN - PHASE 2 STEP 3
432A-432C	TRAFFIC CONTROL PLAN - PHASE 2 STEP 3B
433-442	CONSTRUCTION SEQUENCE LAYOUT - PHASE 3 STEP 1
443-446	TCP SECTION - PHASE 3 STEP 1
447-470	TRAFFIC CONTROL PLAN - PHASE 3 STEP 1
470A-470B	TRAFFIC CONTROL PLAN - PHASE 3 STEP 1B
471	DETOUR RAMP NTP-35S
472	DETOUR DC 287E-35S
473-482	CONSTRUCTION SEQUENCE LAYOUT - PHASE 3 STEP 2
483-486	TCP SECTION - PHASE 3 STEP 2
487-510	TRAFFIC CONTROL PLAN - PHASE 3 STEP 2

SHEET NO.	DESCRIPTION

VOLUME II (CONT'D)

II. TRAFFIC CONTROL PLAN

510A	TCP SECTION - PHASE 3 STEP 2B
510B-510I	TRAFFIC CONTROL PLAN - PHASE 3 STEP 2B
511-520	CONSTRUCTION SEQUENCE LAYOUT - PHASE 4 STEP 1
521-524	TCP SECTION - PHASE 4 STEP 1
525-548	TRAFFIC CONTROL PLAN - PHASE 4 STEP 1
549-558	CONSTRUCTION SEQUENCE LAYOUT - PHASE 4 STEP 2
559-562	TCP SECTION - PHASE 4 STEP 2
563-586	TRAFFIC CONTROL PLAN - PHASE 4 STEP 2
587-596	CONSTRUCTION SEQUENCE LAYOUT - PHASE 5
597-600	TCP SECTION - PHASE 5
601-624	TRAFFIC CONTROL PLAN - PHASE 5
624A-624C	TRAFFIC CONTROL PLAN - PHASE 5B
625-630, 630A-630E	OFFSITE DETOUR PLAN
631	TEMPORARY RETAINING WALL DETAIL SHEET
632	CONSTRUCTION SEQUENCE FOR MISC DRIVEWAYS

STANDARDS

633-644	**BC(1)-07 THRU BC(12)-07
645	**WZ(TD)-03
646-647	**WZ(BTS-1)-03 AND WZ(BTS-2)-03
648	**WZ(STPM)-03
649	**WZ(UL)-03
650	**OMIT
651	**TCP(1-2)-12
652	**TCP(1-4)-12
653	**TCP(2-1)-12
654-656	**TCP(2-4)-12 THRU TCP (2-6)-12
657-658	**TCP(3-2)-98 AND TCP (3-3)-98
659-665	**TCP(6-1)-98A THRU TCP (6-7)-98A
666	**TCP(6-8)-98
667	**OMIT
668-669	**LPCB-10(TYPE1) AND LPCB-10(TYPE2)
670, 670A	**SSCB(2)-10
670B	**SSCB(5)-10
671	**REACT(W)-03

VOLUME III

III. ROADWAY DETAILS

672	TITLE SHEET
673-677	INDEX OF SHEETS
678-700	REMOVAL PLANS
701-704	HORIZONTAL AND VERTICAL CONTROL
705-720	HORIZONTAL ALIGNMENT DATA
721-723	ROADWAY PLAN AND PROFILE - MANAGED LANE TRANSITIONS
724-738	ROADWAY PLAN AND PROFILE - MANAGED LANES
739-742	ROADWAY PLAN AND PROFILE - GENERAL PURPOSE LANE TRANSITIONS
743-764	ROADWAY PLAN AND PROFILE - GENERAL PURPOSE LANES
765-766	ROADWAY PLAN AND PROFILE - GENERAL PURPOSE LANE TRANSITION
767-777	ROADWAY PLAN AND PROFILE - NORTHBOUND FRONTAGE ROAD
778-789	ROADWAY PLAN AND PROFILE - SOUTHBOUND FRONTAGE ROAD
790-809	ROADWAY PLAN AND PROFILE - RAMPS
810-823	ROADWAY PLAN AND PROFILE - DIRECT CONNECTORS
824-825	ROADWAY PLAN AND PROFILE - US 287
826-827	ROADWAY PLAN AND PROFILE - BASSWOOD BLVD
828-829	ROADWAY PLAN AND PROFILE - WESTERN CENTER BLVD
830	ROADWAY PLAN AND PROFILE - FOSSIL CREEK BLVD
831-832	SUPERELEVATION DATA
833-834	METAL BEAM GUARD FENCE SUMMARY
834A	CRASH CUSHION SUMMARY SHEET
835-836, 836A, 837, 837A, 838, 838A, 839-840	INTERSECTION LAYOUT
841-848	DRIVEWAY PROFILES
849-851	DRIVEWAY DETAILS
852-868	GORE CONTOUR PLANS
869-875	RIPRAP LAYOUT
876	RIPRAP DETAIL
877-878	U-TURN MEDIAN DETAILS
879-881	TRAFFIC ISLAND DETAILS
882-883	SUPPLEMENTAL GRADING
884-890	MISCELLANEOUS ROADWAY DETAILS
891-892	BTD (HOU)

SHEET NO.	DESCRIPTION

VOLUME III (CONT'D)

III. ROADWAY DETAILS

STANDARDS

893	*MBGF-09
894	*MBGF-11
895	*GF(31)-11
896	*GF(31)LS-11
897	*GF(31)DAT-11
898	*GF(31)TR-11
899	*GF(31)TL2-11
900	*GF(31)MS-11
901	*SGT(7S)31-11
902	*CRCP(1)-11
903	*TE(HMAC)-11
904	*BED-11
905	*PCTB(1)-04
906	*SSCB(1)-10
907	*SSCB(1F)-10
908	*SSCB(3)-10
909-910	*CSB(1)-10
911	*CSB(2)-10
912	*CDD-08(FW)
913	*CP-TD-03(FW)
914	*CP-TEP-03 (FW)
915	*RS(1)-10
916	*JS-03(FW)
917	*CC-CG(FW)
918-921	*PED-12
922	*PRD-06
923	*TRF
924-925	*SSTR
926	*CSWD-08(FW)
927	*CRVC (FW)
928	*LPD-00 (FW)
929	*REACT(N)-12
930	*SMTC(W)-06
931	*HEART-10

IV. RETAINING WALL DETAILS

932-934	RETAINING WALLS KEYMAP
935	RETAINING WALLS - PLAN AND PROFILE - NB01-A
936	RETAINING WALLS - TYPICAL SECTIONS - NB01-A
937	RETAINING WALLS - PLAN AND PROFILE - NB01-R
938	RETAINING WALLS - TYPICAL SECTIONS - NB01-R
939	RETAINING WALLS - PLAN AND PROFILE - NB02-A
940	RETAINING WALLS - TYPICAL SECTIONS - NB02-A

STATE OF TEXAS
KURT W. AUNGST
90848
LICENSED
PROFESSIONAL ENGINEER

* THE STANDARD SHEETS SPECIFICALLY IDENTIFIED ABOVE HAVE BEEN SELECTED BY ME OR UNDER MY RESPONSIBLE SUPERVISION AS BEING APPLICABLE TO THIS PROJECT.

KURT W. AUNGST, P.E. , P.E. 8/30/12 DATE

STATE OF TEXAS
M. N. MOZAFFAR
85191
LICENSED
PROFESSIONAL ENGINEER

** THE STANDARD SHEETS SPECIFICALLY IDENTIFIED ABOVE HAVE BEEN SELECTED BY ME OR UNDER MY RESPONSIBLE SUPERVISION AS BEING APPLICABLE TO THIS PROJECT.

M. N. MOZAFFAR, P.E. , P.E. 8/30/12 DATE

KENNEDY CONSULTING
TBPE REGISTRATION NO. F-926

I. S. ENGINEERS, LLC
TBPE REG. # F-11657

Texas Department of Transportation
© 2012

IH 35W FROM NORTH TARRANT PKWY TO IH 820

INDEX OF SHEETS

SHEET 1 OF 5

DESIGN	FED. RD. DIV. NO.	FEDERAL AID PROJECT NO.		HIGHWAY NO.
KCI	6	(SEE TITLE SHEET)		IH 35W
GRAPHICS KCI	STATE	DISTRICT	COUNTY	SHEET NO.
CHECK KCI	TEXAS	FTW	TARRANT	1132
CHECK KCI	CONTROL	SECTION	JOB	
	0014	16	255, ETC.	

FILENAME: S3BINDEX41.dgn

DRAWING DATE: 8/30/2012

SHEET NO.	DESCRIPTION
	VOLUME III (CONT'D)
IV.	**RETAINING WALL DETAILS**
941-943	RETAINING WALLS - PLAN AND PROFILE - NB02-L
944	RETAINING WALLS - TYPICAL SECTIONS - NB02-L
945-947	RETAINING WALLS - PLAN AND PROFILE - NB02-R
948	RETAINING WALLS - TYPICAL SECTIONS - NB02-R
949	RETAINING WALLS - PLAN AND PROFILE - NB03-A
950	RETAINING WALLS - TYPICAL SECTIONS - NB03-A
951	RETAINING WALLS - PLAN AND PROFILE - NB03-L
952	RETAINING WALLS - TYPICAL SECTIONS - NB03-L
953-956	RETAINING WALLS - PLAN AND PROFILE - NB03-R
957	RETAINING WALLS - TYPICAL SECTIONS - NB03-R
958-959	RETAINING WALLS - PLAN AND PROFILE - NB04
960	RETAINING WALLS - TYPICAL SECTIONS - NB04
961-962	RETAINING WALL - STRUCTURAL LAYOUT - NB04
963	RETAINING WALLS - PLAN AND PROFILE - NB05-A
964	RETAINING WALLS - TYPICAL SECTIONS - NB05-A
965-967	RETAINING WALLS - PLAN AND PROFILE - NB05-L
968	RETAINING WALLS - TYPICAL SECTIONS - NB05-L
969-971	RETAINING WALLS - PLAN AND PROFILE - NB05-R
972	RETAINING WALLS - TYPICAL SECTIONS - NB05-R
973	RETAINING WALLS - PLAN AND PROFILE - NB06-A
974	RETAINING WALLS - TYPICAL SECTIONS - NB06-A
975-978	RETAINING WALLS - PLAN AND PROFILE - NB06-L
979	RETAINING WALLS - TYPICAL SECTIONS - NB06-L
980-983	RETAINING WALLS - PLAN AND PROFILE - NB06-R
984	RETAINING WALLS - TYPICAL SECTIONS - NB06-R
985	RETAINING WALLS - PLAN AND PROFILE - NB07-A2
986	RETAINING WALLS - TYPICAL SECTIONS - NB07-A2
987-988	RETAINING WALLS - PLAN AND PROFILE - NB07-L
989	RETAINING WALLS - TYPICAL SECTIONS - NB07-L
990	RETAINING WALLS - PLAN AND PROFILE - NB08-A
991	RETAINING WALLS - TYPICAL SECTIONS - NB08-A
992-995	RETAINING WALLS - PLAN AND PROFILE - NB08-L
996	RETAINING WALLS - TYPICAL SECTIONS - NB08-L
997-999	RETAINING WALLS - PLAN AND PROFILE - NB09
1000	RETAINING WALLS - TYPICAL SECTIONS - NB09
1001-1004	RETAINING WALLS - PLAN AND PROFILE - NB10
1005	RETAINING WALLS - TYPICAL SECTIONS - NB10
1006	RETAINING WALLS - PLAN AND PROFILE - SB01-A
1007	RETAINING WALLS - TYPICAL SECTIONS - SB01-A
1008-1010	RETAINING WALLS - PLAN AND PROFILE - SB01-L
1011	RETAINING WALLS - TYPICAL SECTIONS - SB01-L
1012-1014	RETAINING WALLS - PLAN AND PROFILE - SB01-R
1015	RETAINING WALLS - TYPICAL SECTIONS - SB01-R
1016	RETAINING WALLS - PLAN AND PROFILE - SB02-A
1017	RETAINING WALLS - TYPICAL SECTIONS - SB02-A
1018-1020	RETAINING WALLS - PLAN AND PROFILE - SB02-L
1021	RETAINING WALLS - TYPICAL SECTIONS - SB02-L
1022	RETAINING WALLS - PLAN AND PROFILE - SB02-R
1023	RETAINING WALLS - TYPICAL SECTIONS - SB02-R
1024-1027	RETAINING WALLS - PLAN AND PROFILE - SB03
1028	RETAINING WALLS - TYPICAL SECTIONS - SB03
1029-1032	RETAINING WALL - STRUCTURAL LAYOUT - SB03
1033	RETAINING WALLS - PLAN AND PROFILE - SB04-A
1034	RETAINING WALLS - TYPICAL SECTIONS - SB04-A
1035-1037	RETAINING WALLS - PLAN AND PROFILE - SB04-L
1038	RETAINING WALLS - TYPICAL SECTIONS - SB04-L
1039-1042	RETAINING WALLS - PLAN AND PROFILE - SB04-R
1043	RETAINING WALLS - TYPICAL SECTIONS - SB04-R
1044	RETAINING WALLS - PLAN AND PROFILE - SB05-A
1045	RETAINING WALLS - TYPICAL SECTIONS - SB05-A
1046-1048	RETAINING WALLS - PLAN AND PROFILE - SB05-L
1049	RETAINING WALLS - TYPICAL SECTIONS - SB05-L
1050-1052	RETAINING WALLS - PLAN AND PROFILE - SB05-R
1053	RETAINING WALLS - TYPICAL SECTIONS - SB05-R
1054	RETAINING WALLS - PLAN AND PROFILE - SB06-A2
1055	RETAINING WALLS - TYPICAL SECTIONS - SB06-A2
1056-1057	RETAINING WALLS - PLAN AND PROFILE - SB06-R
1058	RETAINING WALLS - TYPICAL SECTIONS - SB06-R
1059	RETAINING WALLS - PLAN AND PROFILE - SB07-A
1060	RETAINING WALLS - TYPICAL SECTIONS - SB07-A
1061-1064	RETAINING WALLS - PLAN AND PROFILE - SB07-R
1065	RETAINING WALLS - TYPICAL SECTIONS - SB07-R
1066-1068	RETAINING WALLS - PLAN AND PROFILE - SB08
1069	RETAINING WALLS - TYPICAL SECTIONS - SB08
1070	RETAINING WALLS - PLAN AND PROFILE - SB09
1071	RETAINING WALLS - TYPICAL SECTIONS - SB09
1072-1073	RETAINING WALLS - MISCELLANEOUS DETAILS
1073A	RETAINING WALLS - WALL FINISH DETAILS

SHEET NO.	DESCRIPTION
	VOLUME III (CONT'D)
IV.	**RETAINING WALL DETAILS**
1073B	RETAINING WALLS - UNDERDRAIN DETAILS
1074-1076	RETAINING WALLS - GEOTECHNICAL RECOMMENDATIONS
1077-1080	RETAINING WALLS - SOIL NAIL DETAILS
1081-1085	RETAINING WALLS - DRILLED SHAFT DETAILS
1086-1087	RETAINING WALLS - MISCELLANEOUS STRUCTURAL DETAILS
1088-1101	BORING PLAN
1102-1124, 1124A-1124Q	BORING LOGS
	STANDARDS
1125	*RW(EM)
1126	*RW(BTR)
1127	*RW(MSE)(MOD)
1128	*RW(TRF)
1129	*RW 1(L)C (MOD)
1130	*RW2
	VOLUME IV
V.	**DRAINAGE DETAILS**
1131	TITLE SHEET
1132-1136	INDEX OF SHEETS
1137	OVERALL DRAINAGE AREA MAP - BIG FOSSIL CREEK, STREAM BFC-2, STREAM BFC-2A, TRIBUTARY TO STREAM BFC-2A
1138	DRAINAGE AREA MAP CULVERT STA. 1547+54.76 AND STA. 1561+34.47
1139-1140	HYDRAULIC DATA SHEET - TRIB TO STREAM BFC-2A
1141-1144	HYDRAULIC DATA SHEET - STREAM BFC-2
1145-1152	HYDRAULIC DATA SHEET - BIG FOSSIL CREEK
1153	HYDRAULIC DATA SHEET - CULVERT 3
1154	HYDRAULIC DATA SHEET - CULVERT 4
1155	CULVERT 1 LAYOUT - TRIB TO STREAM BFC-2A
1156-1159	CULVERT 2 LAYOUT - STREAM BFC-2
1160	CULVERT 3 LAYOUT - 35W ML STA. 1547+54.36
1161-1162	CULVERT 4 LAYOUT - 35W ML STA. 1561+34.47
1163	CULVERT 5 LAYOUT - 35W ML STA. 1602+26.16
1164	HORIZONTAL ALIGNMENT DATA - DRAINAGE CHANNELS
1165-1166	CULVERT 1 CHANNEL LAYOUT - TRIB TO STREAM BFC-2A
1167-1170	CULVERT 2 CHANNEL LAYOUT - STREAM BFC-2
1171-1173	DETENTION POND LAYOUT & DETAILS
1174-1175	CULVERT 3 - TEMPORARY SPECIAL SHORING
1176-1185	INTERIOR DRAINAGE AREA MAP
1186-1188	DRAINAGE COMPUTATIONS - RUNOFF COMPUTATIONS
1189-1191	DRAINAGE COMPUTATIONS - ON-GRADE INLET COMPUTATIONS
1192-1195	DRAINAGE COMPUTATIONS - SAG INLET COMPUTATIONS
1196-1204	DRAINAGE COMPUTATIONS - CONVEYANCE COMPUTATIONS
1205-1232	DRAINAGE PLAN & PROFILE - IH 35W MANAGED LANES
1233-1248	DRAINAGE PLAN & PROFILE - IH 35W GENERAL PURPOSE LANES
1249-1256	DRAINAGE PLAN & PROFILE - NBFR
1257-1265	DRAINAGE PLAN & PROFILE - SBFR
1266-1267	DRAINAGE PLAN & PROFILE - 35S-287W DIRECT CONNECTOR
1268-1269	DRAINAGE PLAN & PROFILE - US 287
1270	DRAINAGE PLAN & PROFILE - WESTERN CENTER BLVD
1271-1282	DRAINAGE PROFILES - LATERALS
1283	DRAINAGE DETAILS - MISCELLANEOUS DRAINAGE DETAILS
1284-1285	MECHANICALLY STABILIZED EARTH WALL PIPE BACKFILL DIAGRAM
	STANDARDS
1286	**SCC-MD
1287	**SCC-7
1288	**SCP-MD
1289	**SCP-7
1290	**SCP-8
1291	**MC-MD
1292	**MC-6-16
1293	**BCS
1294	**PW
1295	**CH-PW-S (SPL)
1296	**CI(1)-02(FW)
1297	**DI-1-02 (FW)
1298-1299	**GI-1-02 (FW)
1300	**MH-1-02 (FW)
1301	**MH-M
1302	**SET (1) (FW)
1303	**SET (2) (FW)
1304	**SETP-PD

SHEET NO.	DESCRIPTION
	VOLUME IV (CONT'D)
	STANDARDS
1306-1307	**BD-3 (MOD)
1308	**BD-1 (MOD)
1309	**CH-PW-0
1310	**CH-PW-S
1311	**SCP-3
1312	**SCP-4
1313	**JB-1-02 (FW)
1314-1315	**IL-H-L
1315A-1315B	**SETB-CD
1315C-1315D.	**SETB-PD
VI.	**UTILITIES**
1316-1338	EXISTING UTILITY LAYOUTS
1339	WATER GENERAL NOTES
1340	WASTEWATER GENERAL NOTES
1341	PROJECT SPECIFIC NOTES
1342	WASTEWATER BYPASS PUMPING PLAN
1343	SHUTDOWN AND SEQUENCING NOTES
1344-1345	EXISTING WATER LINE AND ISOLATION VALVE LOCATION MAP
1346	EXISTING WASTEWATER LINE LOCATION MAP
1347	PROPOSED WATER LINE LOCATION MAP
1348	PROPOSED WASTEWATER LINE LOCATION MAP
1349	CONTROL POINT LOCATIONS FOR PROPOSED WATER AND WASTEWATER LINES
1350	EXISTING WATER LINES TO BE ABANDONED
1351	EXISTING WASTEWATER LINES TO BE ABANDONED
1352-1353	OVERALL LOCATION MAP SHOWING PERMANENT AND TEMPORARY CONSTRUCTION EASEMENTS AND PERMITS
1354-1356	PROPOSED WATER LINE A
1357-1358	PROPOSED WATER LINE B
1359	PROPOSED WATER LINE C
1360-1362	PROPOSED WASTEWATER LINE A
1363	PROPOSED WASTEWATER LINE B
1364-1372	WATER LINE DETAILS
1373-1379	WASTEWATER LINE DETAILS
1380	PAVEMENT DETAILS

STATE OF TEXAS
KURT W. AUNGST
90848
LICENSED
PROFESSIONAL ENGINEER

* THE STANDARD SHEETS SPECIFICALLY IDENTIFIED ABOVE HAVE BEEN SELECTED BY ME OR UNDER MY RESPONSIBLE SUPERVISION AS BEING APPLICABLE TO THIS PROJECT.

KURT W. AUNGST, P.E. , P.E. 8/22/12 DATE

STATE OF TEXAS
M. N. MOZAFFAR
85191
LICENSED
PROFESSIONAL ENGINEER

** THE STANDARD SHEETS SPECIFICALLY IDENTIFIED ABOVE HAVE BEEN SELECTED BY ME OR UNDER MY RESPONSIBLE SUPERVISION AS BEING APPLICABLE TO THIS PROJECT.

M. N. MOZAFFAR, P.E. , P.E. 8/22/2012 DATE

KCI KENNEDY CONSULTING
TBPE REGISTRATION NO. F-926

I. S. ENGINEERS, LLC
TBPE REG. # F-11657

Texas Department of Transportation
© 2012

IH 35W FROM NORTH TARRANT PKWY TO IH 820

INDEX OF SHEETS

SHEET 2 OF 5

DESIGN	FED.RD. DIV.NO.	FEDERAL AID PROJECT NO.		HIGHWAY NO.
KCI	6	(SEE TITLE SHEET)		IH 35W
GRAPHICS	STATE	DISTRICT	COUNTY	SHEET NO.
KCI	TEXAS	FTW	TARRANT	1133
CHECK	CONTROL	SECTION	JOB	
KCI	0014	16	255, ETC.	
CHECK KCI				

FILENAME: S3BINDEX42.dgn
DRAWING DATE: 8/22/2012

SHEET NO.	DESCRIPTION

VOLUME IV (CONT'D)

VI. UTILITIES

1381-1382	**TRAFFIC CONTROL PLANS PHASE 1**
1383-1384	**TRAFFIC CONTROL PLANS PHASE 2**
1385-1388	**TRAFFIC CONTROL PLANS PHASE 3**
1389	**TRAFFIC CONTROL PLANS SANITARY SEWER PHASE 1**
1390-1391	**EROSION CONTROL**
1392	**EROSION CONTROL DETAILS**

VOLUME V

VII. BRIDGES

1393	TITLE SHEET
1394-1398	INDEX OF SHEETS
1399-1401	BRIDGE LAYOUT - NB IH 35W TO WB US 287
1402	FOUNDATION LAYOUT
1403	EST. QUANTITIES AND BEARING SEAT ELEV.
1404-1405	ABUTMENT NO. 1
1406-1407	ABUTMENT NO. 6
1408-1410	INTERIOR BENT NO. 2 & 5
1411-1412	INTERIOR BENT NO. 3
1413-1414	INTERIOR BENT NO. 4
1415	COLUMN DETAILS TYPE A
1416	COLUMN DETAILS TYPE B
1417	FOOTING DETAILS TYPE A
1418	FOOTING DETAILS TYPE B
1419	GIRDER LAYOUT (SPAN 1)
1420-1421	120.00' PRESTRESSED CONCRETE I-GIRDER UNIT
1422-1427	493.00' CONTINUOUS PLATE GIRDER UNIT
1428	GIRDER LAYOUT (SPAN 5)
1429-1430	112.00' PRESTRESSED CONCRETE I-GIRDER UNIT
1431-1434	BRIDGE LAYOUT - NB IH 35W ML TO WB US 287
1435-1436	FOUNDATION LAYOUT
1437	EST. QUANTITIES AND BEARING SEAT ELEV.
1438-1439	ABUTMENT NO. 1
1440-1441	ABUTMENT NO. 9
1442-1445	INTERIOR BENT NO. 2, 7 AND 8
1446-1448	INTERIOR BENT NO. 3 & 6
1449-1450	INTERIOR BENT NO. 4
1451-1453	INTERIOR BENT NO. 5
1454	COLUMN DETAILS TYPE A
1455	COLUMN DETAILS TYPE B
1456	COLUMN DETAILS TYPE C
1457	COLUMN DETAILS TYPE D
1458	FOOTING DETAILS TYPE A
1459	FOOTING DETAILS TYPE B
1460	FOOTING DETAILS TYPE C
1461	FOOTING DETAILS TYPE D
1462	GIRDER LAYOUT (SPANS 1 - 2)
1463-1464	236.00' PRESTRESSED CONCRETE I-GIRDER UNIT
1465-1470	440.00' CONTINUOUS PLATE GIRDER UNIT
1471-1476	172.00' PLATE GIRDER UNIT
1477	GIRDER LAYOUT (SPANS 6 - 8)
1478-1479	381.00' PRESTRESSED CONCRETE I-GIRDER UNIT
1480-1482	BRIDGE LAYOUT - EB US 287 TO SB IH 35W ML
1483	FOUNDATION LAYOUT
1484	EST. QUANTITIES AND BEARING SEAT ELEV.
1485-1486	ABUTMENT NO. 1
1487-1488	ABUTMENT NO. 8
1489-1490	INTERIOR BENT NO. 2 & 3
1491-1493	INTERIOR BENT NO. 4
1494-1495	INTERIOR BENT NO. 5
1496-1497	INTERIOR BENT NO. 6
1498-1499	INTERIOR BENT NO. 7
1500	COLUMN DETAILS - TYPE A
1501	COLUMN DETAILS - TYPE B
1502	COLUMN DETAILS - TYPE C
1503	COLUMN DETAILS - TYPE D
1504	FOOTING DETAILS - TYPE A
1505	FOOTING DETAILS - TYPE B
1506	FOOTING DETAILS - TYPE C
1507	FOOTING DETAILS - TYPE D
1508-1510	BRIDGE DRAIN DETAILS
1511	GIRDER LAYOUT (SPANS 1 - 3)
1512-1513	390.00' PRESTRESSED CONCRETE I-GIRDER UNIT
1514-1520	220.00' CONTINUOUS PLATE GIRDER UNIT
1521	GIRDER LAYOUT (SPANS 5 - 7)
1522-1523	305.00' PRESTRESSED CONCRETE I-GIRDER UNIT
1524	BRIDGE LAYOUT - BASSWOOD BLVD NS TURNAROUND - IH 35W UNDERPASS

SHEET NO.	DESCRIPTION

VOLUME V (CONT'D)

VII. BRIDGES

1525	ESTIMATED QUANTITIES AND BEARING SEAT ELEV.
1526	FOUNDATION LAYOUT
1527-1528	ABUTMENT NO. 1
1529-1530	ABUTMENT NO. 5
1531	INTERIOR BENT NO. 2
1532	INTERIOR BENT NO. 3
1533	INTERIOR BENT NO. 4
1534	GIRDER LAYOUT (SPANS 1 & 2)
1535-1536	201.00' PRESTRESSED CONCRETE I-GIRDER UNIT (SPANS 1 & 2)
1537	GIRDER LAYOUT (SPANS 3 & 4)
1538-1539	201.00' PRESTRESSED CONCRETE I-GIRDER UNIT (SPANS 3 & 4)
1540	APPROACH SLAB DETAILS
1541	BRIDGE END DETAILS
1542	BRIDGE LAYOUT - BASSWOOD BLVD SN TURNAROUND - IH 35W UNDERPASS
1543	ESTIMATED QUANTITIES AND BEARING SEAT ELEV.
1544	FOUNDATION LAYOUT
1545-1546	ABUTMENT NO. 1
1547-1548	ABUTMENT NO. 5
1549	INTERIOR BENT NO. 2
1550	INTERIOR BENT NO. 3
1551	INTERIOR BENT NO. 4
1552	GIRDER LAYOUT (SPANS 1 & 2)
1553-1554	201.00' PRESTRESSED CONCRETE I-GIRDER UNIT (SPANS 1 & 2)
1555	GIRDER LAYOUT (SPANS 3 & 4)
1556-1557	201.00' PRESTRESSED CONCRETE I-GIRDER UNIT (SPANS 3 & 4)
1558	APPROACH SLAB DETAILS
1559	BRIDGE END DETAILS
1560-1562	BRIDGE LAYOUT - SB IH35W ENTRANCE RAMP TO MANAGED LANES
1563	EST. QUANTITIES AND BEARING SEAT ELEV.
1564	FOUNDATION LAYOUT
1565	FOOTING DETAILS - BENTS 2, 3, 7 & 8
1566	FOOTING DETAILS - BENTS 4 & 6
1567	FOOTING DETAILS - BENT 5
1568	ABUTMENT NO. 1
1569	ABUTMENT NO. 9
1570-1571	INTERIOR BENT NO. 2
1572-1573	INTERIOR BENT NO. 3
1574-1575	INTERIOR BENT NO. 4
1576-1580	INTERIOR BENT NO. 5
1581-1582	INTERIOR BENT NO. 6
1583-1584	INTERIOR BENT NO. 7
1585-1586	INTERIOR BENT NO. 8
1587-1588	GIRDER LAYOUT
1589-1594	353.00' PLATE GIRDER UNIT
1595-1596	348.00' PRESTR. CONCRETE I-GIRDER UNIT
1597-1598	354.00' PRESTR. CONCRETE I-GIRDER UNIT
1599	BRIDGE DRAIN DETAILS
1600-1603	BRIDGE LAYOUT - NB IH35W EXIT RAMP FROM MANAGED LANES
1604	EST. QUANTITIES AND BEARING SEAT ELEV.
1605-1606	FOUNDATION LAYOUT
1607	FOOTING DETAILS - BENTS 2-4, 9-10
1608	FOOTING DETAILS - BENTS 5, 6 & 8
1609	FOOTING DETAILS - BENT 7
1610	ABUTMENT NO. 1
1611	ABUTMENT NO. 11
1612-1613	INTERIOR BENTS NO. 2 - 4
1614-1615	INTERIOR BENT NO. 5
1616-1617	INTERIOR BENT NO. 6
1618-1622	INTERIOR BENT NO. 7
1623-1624	INTERIOR BENT NO. 8
1625-1626	INTERIOR BENT NO. 9
1627-1628	INTERIOR BENT NO. 10
1629-1630	GIRDER LAYOUT
1631-1637	564.00' PLATE GIRDER UNIT
1638-1639	472.00' PRESTRESSED CONCRETE I-GIRDER UNIT
1640-1641	354.00' PRESTRESSED CONCRETE I-GIRDER UNIT
1642-1644	BRIDGE DRAIN DETAILS
1645	AS-BUILT BRIDGE LAYOUT - RAMP D OVER RAMP C
1646	ESTIMATED QUANTITIES
1647	AS-BUILT ABUTMENT
1648	AS-BUILT BRIDGE LAYOUT - RAMP A OVER RAMP B
1649	ESTIMATED QUANTITIES
1650	AS-BUILT ABUTMENT
1651	BRIDGE LAYOUT - NB FRONTAGE RD - OVER BIG FOSSIL CK
1652	PHASING DETAILS
1653	FOUNDATION LAYOUT
1654	EST. QUANTITIES AND BEARING SEAT ELEV.
1655-1656	ABUTMENT NO. 1
1657-1658	ABUTMENT NO. 4

STATE OF TEXAS
KURT W. AUNGST
90848
LICENSED
PROFESSIONAL ENGINEER

* THE STANDARD SHEETS SPECIFICALLY IDENTIFIED ABOVE HAVE BEEN SELECTED BY ME OR UNDER MY RESPONSIBLE SUPERVISION AS BEING APPLICABLE TO THIS PROJECT.

KURT W. AUNGST, P.E. , P.E. 7/13/12 DATE

STATE OF TEXAS
M. N. MOZAFFAR
85191
LICENSED
PROFESSIONAL ENGINEER

** THE STANDARD SHEETS SPECIFICALLY IDENTIFIED ABOVE HAVE BEEN SELECTED BY ME OR UNDER MY RESPONSIBLE SUPERVISION AS BEING APPLICABLE TO THIS PROJECT.

M. N. MOZAFFAR, P.E. , P.E. 7/13/12 DATE

KENNEDY CONSULTING
TBPE REGISTRATION NO. F-926

I. S. ENGINEERS, LLC
TBPE REG. # F-11657

Texas Department of Transportation
© 2012

IH 35W FROM NORTH TARRANT PKWY TO IH 820

INDEX OF SHEETS

SHEET 3 OF 5

DESIGN	FED.RD. DIV.NO.	FEDERAL AID PROJECT NO.		HIGHWAY NO.
KCI	6	(SEE TITLE SHEET)		IH 35W
GRAPHICS KCI	STATE	DISTRICT	COUNTY	SHEET NO.
CHECK KCI	TEXAS	FTW	TARRANT	1134
CHECK KCI	CONTROL	SECTION	JOB	
	0014	16	255, ETC.	

DRAWING DATE: 7/13/2012 FILENAME: S3BINDEX43.dgn

SHEET NO.	DESCRIPTION

VOLUME V (CONT'D)

VII. BRIDGES

1659-1660	INTERIOR BENT NO. 2 & 3
1661	GIRDER LAYOUT (SPANS 1 - 3)
1662-1663	209.50' PRESTRESSED CONCRETE I-GIRDER UNIT
1664	BRIDGE LAYOUT - SB FRONTAGE RD - OVER BIG FOSSIL CK
1665	PHASING DETAILS
1666	FOUNDATION LAYOUT
1667	EST. QUANTITIES AND BEARING SEAT ELEV.
1668-1669	ABUTMENT NO. 1
1670-1671	ABUTMENT NO. 4
1672-1673	INTERIOR BENT NO. 2
1674-1675	INTERIOR BENT NO. 3
1676	GIRDER LAYOUT (SPANS 1 - 3)
1677-1678	211.50' PRESTRESSED CONCRETE I-GIRDER UNIT
1679	BRIDGE LAYOUT - NB IH 35W - OVER BIG FOSSIL CK
1680-1681	PHASING DETAILS
1682-1683	AS-BUILT - BRIDGE LAYOUT - BIG FOSSIL CREEK BRIDGE - NORTHBOUND
1684	FOUNDATION LAYOUT
1685	EST. QUANTITIES AND BEARING SEAT ELEV.
1686-1688	ABUTMENT NO. 1
1689-1691	ABUTMENT NO. 4
1692-1694	INTERIOR BENT NO. 2 AND 3
1695	GIRDER LAYOUT SPANS 1 - 3
1696-1698	213.15' PRESTRESSED CONCRETE I-GIRDER UNIT
1699-1700	APPROACH SLAB DETAILS
1701	BRIDGE LAYOUT - SB IH 35W - OVER BIG FOSSIL CK
1702-1703	PHASING DETAILS
1704-1705	AS-BUILT - BRIDGE LAYOUT - BIG FOSSIL CREEK BRIDGE - SOUTHBOUND
1706	FOUNDATION LAYOUT
1707	EST. QUANTITIES AND BEARING SEAT ELEV.
1708-1709	ABUTMENT NO. 1
1710-1711	ABUTMENT NO. 4
1712	INTERIOR BENT NO. 2
1713	INTERIOR BENT NO. 3
1714	GIRDER LAYOUT (SPANS 1 - 3)
1715-1716	213.15' PRESTRESSED CONCRETE I-GIRDER UNIT
1717-1718	APPROACH SLAB DETAILS
1719	BRIDGE LAYOUT - SB IH35W ENTR RAMP TO GP - OVER BIG FOSSIL CREEK
1720	BRIDGE TYPICAL SECTION
1721	EST. QUANTITIES AND BEARING SEAT ELEV.
1722	FOUNDATION LAYOUT
1723	ABUTMENT NO. 1
1724	ABUTMENT NO. 4
1725	MISCELLANEOUS ABUTMENT DETAILS
1726	INTERIOR BENTS NO. 2 & 3
1727	GIRDER LAYOUT (SPANS 1 - 3)
1728-1729	218.65' PRESTRESSED CONCRETE I-GIRDER UNIT
1730	BRIDGE LAYOUT - NB IH35W EXIT RAMP FROM GP - OVER BIG FOSSIL CREEK
1731	BRIDGE TYPICAL SECTION
1732	EST. QUANTITIES AND BEARING SEAT ELEV.
1733	FOUNDATION LAYOUT
1734	ABUTMENT NO. 1
1735	ABUTMENT NO. 4
1736	MISCELLANEOUS ABUTMENT DETAILS
1737	INTERIOR BENTS NO. 2 & 3
1738	GIRDER LAYOUT (SPANS 1 - 3)
1739-1740	246.90' PRESTRESSED CONCRETE I-GIRDER UNIT
1741	BRIDGE LAYOUT - NB IH 35W GP, ML AND EX R - OVER WESTERN CENTER BLVD
1742	PHASING DETAILS
1743	AS-BUILT BRIDGE LAYOUT
1744	AS-BUILT BRIDGE LAYOUT TYP SECTION
1745	FOUNDATION LAYOUT
1746-1747	ABUTMENT 1 DETAILS
1748-1749	ABUTMENT 4 DETAILS
1750	INTERIOR BENT NO. 2
1751	INTERIOR BENT NO. 3
1752	GIRDER LAYOUT
1753-1754	267.30' PRESTRESSED CONCRETE I-GIRDER UNIT
1755-1756	ABUTMENT 1 DETAILS
1757-1758	ABUTMENT 4 DETAILS
1759	INTERIOR BENT NO. 2
1760	INTERIOR BENT NO. 3
1761	GIRDER LAYOUT
1762-1763	267.30' PRESTRESSED CONCRETE I-GIRDER UNIT
1764	BRIDGE LAYOUT - SB IH 35W GP, ML AND ENT R - OVER WESTERN CENTER BLVD
1765	PHASING DETAILS
1766	AS-BUILT BRIDGE LAYOUT
1767	AS-BUILT BRIDGE LAYOUT TYP SECTION
1768	FOUNDATION LAYOUT
1769-1770	ABUTMENT 1 DETAILS
1771-1772	ABUTMENT 4 DETAILS

SHEET NO.	DESCRIPTION

VOLUME V (CONT'D)

VII. BRIDGES

1773	INTERIOR BENT NO. 2
1774	INTERIOR BENT NO. 3
1775	GIRDER LAYOUT
1776-1777	267.30' PRESTRESSED CONCRETE I-GIRDER UNIT
1778	ESTIMATED QUANTITIES

STANDARDS

1779	**BAS-A
1780	**BAS-C
1781-1782	**BMCS
1783-1784	**BRSM
1785-1786	**BRSM (MOD)
1787	**BS-EJCP
1788-1790	**C221
1791-1794	**C402 (MOD)
1795	**CRR
1796	**BAT-CTFB-08(FW)
1797	**CSB(3)-10
1798-1799	**FD
1800-1801	**IGD
1802-1804	**IGEB
1805-1807	**IGEB (MOD)
1808	**IGMS
1809-1814	**IGND
1815	**IGTS
1816	**MEBR(C)
1817	**MEBR(S)
1818-1821	**PCP
1822	**PCP-FAB
1823-1824	**PMDF
1825	**SBMS
1826	**SBTS
1827-1828	**SEJ-A
1829-1831	**SGEB
1832-1834	**SGMD
1835-1836	**SSCB(2)-10
1837-1838	**SSTR
1839-1841	**T401

VOLUME VI

VIII. TRAFFIC ITEMS

1842	TITLE SHEET
1843-1847	INDEX OF SHEETS
1848	TRAFFIC SIGNAL PLANS - EXISTING CONDITIONS LAYOUT - SBFR AT BASSWOOD BLVD
1849	TRAFFIC SIGNAL PLANS - PROPOSED INTERSECTION LAYOUT
1850	TRAFFIC SIGNAL PLANS - SUMMARY CHARTS
1851	TRAFFIC SIGNAL PLANS - TERMINATION & PHASING
1852	TRAFFIC SIGNAL PLANS - SIGNS LAYOUT
1853	EXISTING CONDITIONS TRAFFIC SIGNAL LAYOUT - NBFR AT BASSWOOD BLVD
1854	TRAFFIC SIGNAL PLANS - PROPOSED INTERSECTION LAYOUT
1855	TRAFFIC SIGNAL PLANS - SUMMARY CHARTS
1856	TRAFFIC SIGNAL PLANS - TERMINATION & PHASING
1857	TRAFFIC SIGNAL PLANS - SIGNS LAYOUT
1858	EXISTING CONDITIONS TRAFFIC SIGNAL LAYOUT - SBFR AT WESTERN CENTER BLVD
1859	TRAFFIC SIGNAL PLANS - TEMPORARY INTERSECTION LAYOUT
1860	TRAFFIC SIGNAL PLANS - TEMP SIGNAL SUMMARY CHARTS
1861	TRAFFIC SIGNAL PLANS - TEMP SIGNAL TERMINATION & PHASING
1862	TRAFFIC SIGNAL PLANS - TEMP SIGNAL SIGN LAYOUT
1863	TRAFFIC SIGNAL PLANS - PROPOSED INTERSECTION LAYOUT
1864	TRAFFIC SIGNAL PLANS - SUMMARY CHARTS
1865	TRAFFIC SIGNAL PLANS - TERMINATION & PHASING
1866	TRAFFIC SIGNAL PLANS - SIGNS LAYOUT
1867	TRAFFIC SIGNAL PLANS - EXISTING CONDITIONS LAYOUT - NBFR AT WESTERN CENTER BLVD
1868	TRAFFIC SIGNAL PLANS - TEMPORARY INTERSECTION LAYOUT
1869	TRAFFIC SIGNAL PLANS - TEMP SIGNAL SUMMARY CHARTS
1870	TRAFFIC SIGNAL PLANS - TEMP SIGNAL TERMINATION & PHASING
1871	TRAFFIC SIGNAL PLANS - TEMP SIGNAL SIGNS LAYOUT
1872	TRAFFIC SIGNAL PLANS - PROPOSED INTERSECTION LAYOUT
1873	TRAFFIC SIGNAL PLANS - SUMMARY CHARTS

SHEET NO.	DESCRIPTION

VOLUME VI (CONT'D)

VIII. TRAFFIC ITEMS

1874	TRAFFIC SIGNAL PLANS - TERMINATION & PHASING
1875	TRAFFIC SIGNAL PLANS - SIGNS LAYOUT
1876	CITY OF FORT WORTH - FIGURE 4 MOVEMENT DIAGRAM
1877	TRAFFIC SIGNAL DETAILS - SIGNAL HEADS AND PED POLE DETAILS

STANDARDS

1878-1879	**SMA-80(1)-12 AND SMA-80(2)-12
1880	**LUM-A-12
1881	**CFA-12
1882-1883	**MA-C-12 AND MA-D-12
1884	**MA-DPD-12
1885	**TS-FD-12
1886-1887	**VDZ(1)-05(FTW) AND VDZ(2)-05(FTW)
1888	**AS-GNBOX
1889-1890	**TEMPORARY SIGNAL TYPICAL DETAIL SHEET
1891	**TYPE 170 CABINET INSTALLATION DETAILS
1892-1915	ILLUMINATION PLAN
1916	LUMINAIRE SUMMARY
1917	UNDERPASS CONDUIT SUMMARY
1918-1919	CONDUIT SUMMARY
1920	GROUND BOX SUMMARY
1921	ELECTRICAL SERVICE SUMMARY

STANDARDS

1922-1926	**ED(1)-03 THRU ED(5)-03
1927	**ED(6)-03(FTW)
1928-1929	**ED(7)-03 AND ED(8)-03
1930-1931	**RID(LUM1)-07 AND RID(LUM2)-07
1932	**RID(FND)-11
1933	**RID(UP)-07
1934	**RID(IF)-07
1935-1938	**RIP(1)-11 THRU RIP(4)-11
1939-1947	**HMID(1)-03 THRU HMID(9)-03
1948-1949	**HMIP(1)-98 AND HMIP(2)-98
1950-1951	**HMIF(1)-98 AND HMIF(2)-98

STATE OF TEXAS
KURT W. AUNGST
90848
LICENSED
PROFESSIONAL ENGINEER

* THE STANDARD SHEETS SPECIFICALLY IDENTIFIED ABOVE HAVE BEEN SELECTED BY ME OR UNDER MY RESPONSIBLE SUPERVISION AS BEING APPLICABLE TO THIS PROJECT.

KURT W. AUNGST, P.E. , P.E. 8/29/12 DATE

STATE OF TEXAS
M. N. MOZAFFAR
85191
LICENSED
PROFESSIONAL ENGINEER

** THE STANDARD SHEETS SPECIFICALLY IDENTIFIED ABOVE HAVE BEEN SELECTED BY ME OR UNDER MY RESPONSIBLE SUPERVISION AS BEING APPLICABLE TO THIS PROJECT.

M. N. MOZAFFAR, P.E. , P.E. 8/29/12 DATE

KENNEDY CONSULTING
TBPE REGISTRATION NO. F-926

I. S. ENGINEERS, LLC
TBPE REG. # F-11657

Texas Department of Transportation
© 2012

IH 35W FROM NORTH TARRANT PKWY TO IH 820

INDEX OF SHEETS

SHEET 4 OF 5

DESIGN	FED.RD. DIV.NO.	FEDERAL AID PROJECT NO.		HIGHWAY NO.
KCI	6	(SEE TITLE SHEET)		IH 35W
GRAPHICS KCI	STATE	DISTRICT	COUNTY	SHEET NO.
CHECK KCI	TEXAS	FTW	TARRANT	1135
CHECK KCI	CONTROL	SECTION	JOB	
	0014	16	255, ETC.	

FILENAME: S3BINDEX44.dgn

DRAWING DATE: 8/28/2012

SHEET NO.	DESCRIPTION

VOLUME VI (CONT'D)

VIII. TRAFFIC ITEMS

1952-1973	SIGN LAYOUTS
1974-2017	SIGN SUPPORT LAYOUTS
2018-2028	LARGE GUIDE SIGN DETAILS
2029-2030	SMALL SIGN DETAILS
2031	LARGE SIGNS SCHEDULE & QUANTITIES

STANDARDS

2032	*WV&IZ-96
2033-2034	*OSB-Z4I
2035-2036	*HOSB-Z4I
2037	*OSBC
2038-2039	*OSBT
2040	*OSB-FD
2041	*OSB-FD-SC
2042	*HCOSS-Z1-10
2043	*COSS AND OSB-SZ
2044	*COSS-Z3 AND Z3I-10
2045	*COSS-Z4 AND Z4I-10
2046-2047	*COSSD
2048	*COSSF
2049	*COSS-FD
2050	*SMD(GEN)-08
2051-2053	*SMD(SLIP-1)-08 THRU SMD(SLIP-3)-08
2054	*SMD(TWT)-08
2055	*SMD(FRP)-08
2056	*SMD(TY G)-08
2057-2060	*SMD(2-1)-08 THRU SMD(2-4)-08
2061	*SMD(2-6)-01
2062-2063	*SMD(8W1)-08 AND SMD(8W2)-08
2064-2068	*TSR(1)-08 THRU TSR(5)-08
2069-2092	PAVEMENT MARKINGS & DELINEATION

STANDARDS

2093	*D&OM(1)-10
2094-2097	*D&OM(2)-04 THRU D&OM(5)-04
2098	*D&OM(VIA)-04
2099-2102	*FPM(1)-12 THRU FPM(4)-12
2103-2106	*PM(1)-12 THRU PM(4)-12
2107	*BLPM-10
2108	*WZ(DERD)-03
2109-2133	ITS PLAN
2134	OMIT
2135-2137	ITS PLAN
2138	ITS DETAIL SHEET - CCTV COVERAGE MAP
2139-2162, 2162A, 2163-2167, 2167A, 2168-2176	ITS ELEVATION CROSS SECTIONS
2177-2189	ITS DETAIL SHEET
2190	TOLL LAYOUT - PROJECT SATELLITE BUILDING
2190A	CLF-10 (MOD)
2191-2194	ITS DETAIL SHEET
2195	TOLL LAYOUT - RAMP 35EX-MLS
2196-2198	TOLLING DETAILS
2199	TOLL LAYOUT - DC 287E-MLS
2200-2202	TOLLING DETAILS
2203	TOLL LAYOUT - RAMP BB-MLS
2204-2206	TOLLING DETAILS
2207	TOLL LAYOUT - MAINLANE
2208-2211	TOLLING DETAILS

IX. EROSION CONTROL

2212-2213	EPIC
2214	STORM WATER POLLUTION PREVENTION PLAN (SW3P)
2215-2237	EROSION CONTROL PLAN

STANDARDS

2238-2240	**EC(1)-09 THRU EC(3)-09

STATE OF TEXAS
KURT W. AUNGST
90848
LICENSED
PROFESSIONAL ENGINEER

* THE STANDARD SHEETS SPECIFICALLY IDENTIFIED ABOVE HAVE BEEN SELECTED BY ME OR UNDER MY RESPONSIBLE SUPERVISION AS BEING APPLICABLE TO THIS PROJECT.

KURT W. AUNGST, P.E. , P.E. 8/29/12 DATE

STATE OF TEXAS
M. N. MOZAFFAR
85191
LICENSED
PROFESSIONAL ENGINEER

** THE STANDARD SHEETS SPECIFICALLY IDENTIFIED ABOVE HAVE BEEN SELECTED BY ME OR UNDER MY RESPONSIBLE SUPERVISION AS BEING APPLICABLE TO THIS PROJECT.

M. N. MOZAFFAR, P.E. , P.E. 8/29/12 DATE

KCI KENNEDY CONSULTING
TBPE REGISTRATION NO. F-926

I. S. ENGINEERS, LLC
TBPE REG. # F-11657

Texas Department of Transportation
© 2012

IH 35W FROM NORTH TARRANT PKWY TO IH 820

INDEX OF SHEETS

SHEET 5 OF 5

DESIGN	FED.RD. DIV.NO.	FEDERAL AID PROJECT NO.		HIGHWAY NO.
KCI	6	(SEE TITLE SHEET)		IH 35W
GRAPHICS KCI	STATE	DISTRICT	COUNTY	SHEET NO.
CHECK KCI	TEXAS	FTW	TARRANT	1136
CHECK KCI	CONTROL	SECTION	JOB	
	0014	16	255, ETC.	

FILENAME: S3BINDEX45.dgn

DRAWING DATE: 8/28/2012

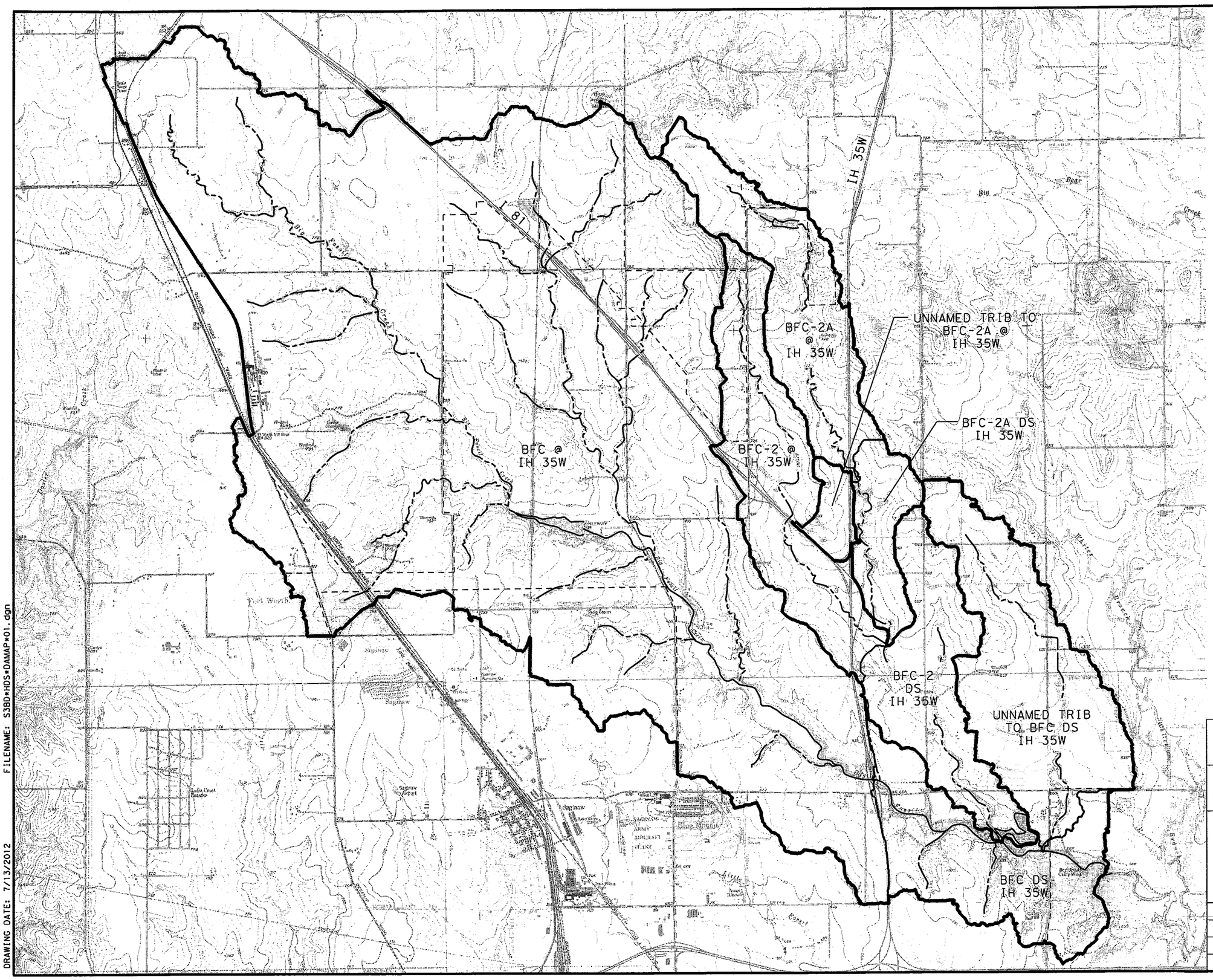

0 2000' 4000'

SCALE IN FEET

LEGEND
OVERALL WATERSHED BOUNDARY
NO SUB-AREAS SHOWN ON THIS MAP
BFC @ IH 35W — WATERSHED ID

NOTES:

1. SEE HYDRAULIC DATA SHEETS FOR DETAILED SUB-AREA MAPPING.

STATE OF TEXAS
JOHN A. TERRY
51729
REGISTERED PROFESSIONAL ENGINEER

7-5-12

H & H RESOURCES, INC (TBPE F-3678)

H & H RESOURCES
CIVIL ENGINEERS
TBPE REGISTRATION NO. F-3678

Texas Department of Transportation
© 2012

IH 35W FROM NORTH TARRANT PKWY TO IH 820

OVERALL DRAINAGE AREA MAP

BIG FOSSIL CREEK
STREAM BFC-2
STREAM BFC-2A
TRIBUTARY TO STREAM BFC-2A

SHEET 1 OF 1

DESIGN	FED. RD. DIV. NO.	FEDERAL AID PROJECT NO.		HIGHWAY NO.
JKB	6	(SEE TITLE SHEET)		IH 35W
GRAPHICS	STATE	DISTRICT	COUNTY	SHEET NO.
CA	TEXAS	FTW	TARRANT	1137
CHECK	CONTROL	SECTION	JOB	
JKB	0014	16	255, ETC.	
CHECK				
JT				

FILENAME: S3BD*HDS*DAMAP*01.dgn

DRAWING DATE: 7/13/2012

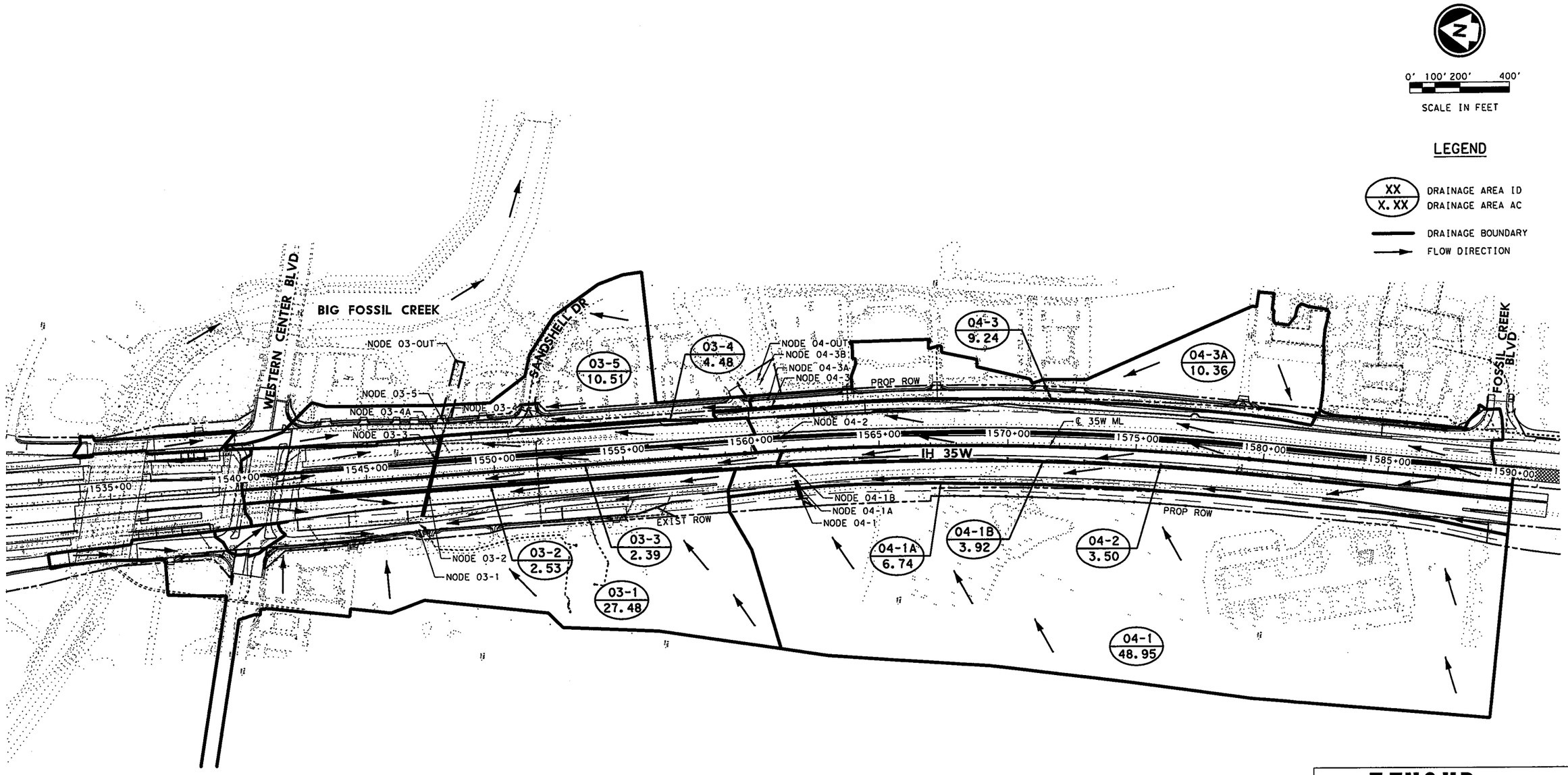

NOTES:

1. WATERSHED DELINEATION SHOWN ON THIS SHEET IS FOR TRUNK ANALYSIS ONLY. SEE INTERIOR DRAINAGE AREA MAPS FOR STORM DRAIN DESIGN SUB-AREAS.

STATE OF TEXAS
JOHN A. TERRY
51729
REGISTERED
PROFESSIONAL ENGINEER

7-5-12

H & H RESOURCES, INC (TBPE F-3678)

H & H RESOURCES
CIVIL ENGINEERS
TBPE REGISTRATION NO. F-3678

Texas Department of Transportation
© 2012

IH 35W FROM NORTH TARRANT PKWY TO IH 820

DRAINAGE AREA MAP
CULVERT STA 1547+54.36
AND STA 1561+34.47

SCALE: 1" = 400' SHEET 1 OF 1

DESIGN	FED. RD. DIV. NO.	FEDERAL AID PROJECT NO.		HIGHWAY NO.
JKB	6	(SEE TITLE SHEET)		IH 35W
GRAPHICS CA	STATE	DISTRICT	COUNTY	SHEET NO.
CHECK JKB	TEXAS	FTW	TARRANT	1138
CHECK JT	CONTROL	SECTION	JOB	
	0014	16	255, ETC.	

FILENAME: S3BD*DAM*01.dgn

DRAWING DATE: 7/13/2012

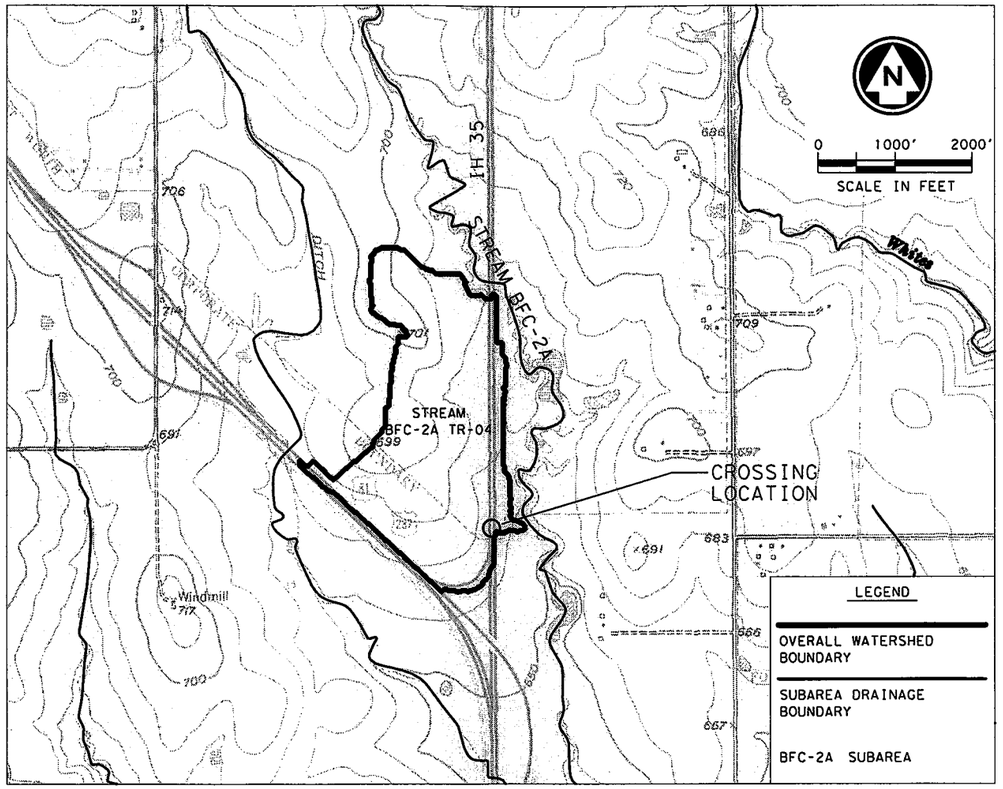

DRAINAGE AREA MAP

1" = 2000'

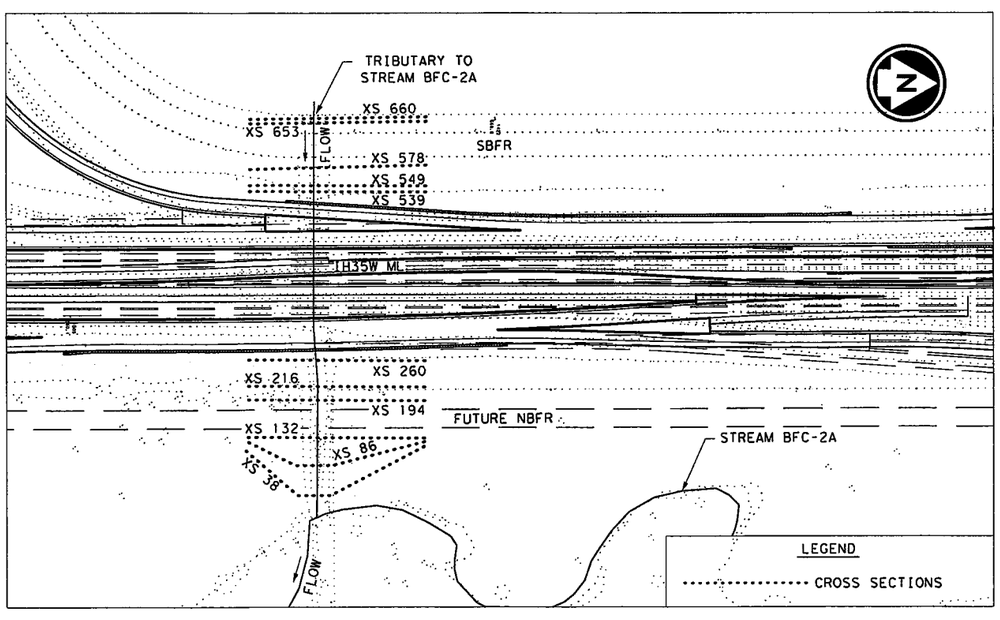

HEC-RAS CROSS SECTION LOCATIONS

1" = 250'

HYDROLOGIC COMPUTATIONS

HYDROLOGIC METHOD: SNYDER'S UNIT HYDROGRAPH, FREQUENCY STORM (HEC-HMS 3.5)	DRAINAGE AREA: 0.245 MI^2	DESIGN FREQUENCY: 25 YR FRONTAGE ROAD, 25 YR RAMPS, 50 YR MAIN LANE

SUMMARY OF SOIL CONDITIONS AND LAND USE: SOIL DATA OBTAINED FROM THE NRCS THROUGH ITS WEB SOIL DATA UTILITY (hhtp://soildatamart.nrcs.usda.gov/). THE MAJORITY OF SURFACE SOILS IN THE WATERSHED ARE CLAYS AND CLAY LOAMS, WITH THE SANGER CLAY SOILS COMPRISING APPROXIMATELY 77.2% OF THE WATERSHED. OTHER MAJOR SOIL GROUPS INCLUDE THE SLIDELL CLAY SOILS (18.1%). THE NRCS CHARACTERIZES APPROXIMATELY 99.7% OF THE SOILS IN THE WATERSHED AS HYDROLOGIC GROUP D. THERE ARE NO SUBSTANTIAL FLOOD CONTROL OR DETNEION FACILITIES WITHIN THE WATERSHED, AND SURFACE WATER COMPRISES APPROXIMATELY 0.3% OF THE STUDY WATERSHED. THE MAJOR LAND USES BASED ON THE 2005 NCTCOG LAND USE COVERAGE ARE UNDEVELOPED OR UNDER CONSTRUCTION (68%), AND TRANSPORTATION (32%).

PRECIPITATION INFORMATION

FREQUENCY (YR)	24 HR RAINFALL DEPTH (IN)
10	6.33
25	7.45
50	8.44
100	9.46
500	11.83

SUMMARY OF HEC-HMS PARAMETERS

SUBAREA NAME	Area (sq.mi)	Lag (hrs)	% Imp.	Peaking Coefficient	25-YR Loss rate (in/hr)		50-YR Loss rate (in/hr)		100-YR Loss rate (in/hr)	
					Initial	Constant	Initial	Constant	Initial	Constant

SUMMARY OF DISCHARGES

TxDOT					
INTERVAL	10 YR	25 YR	50 YR	100 YR	500 YR
FLOW (CFS)	446	533	595	660	802

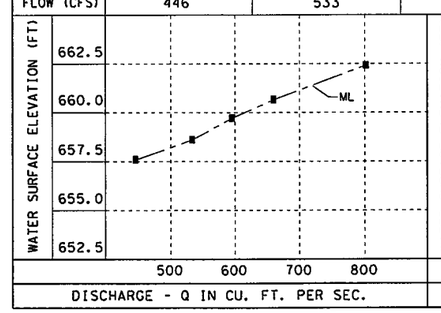

CONVEYANCE CURVE[3]

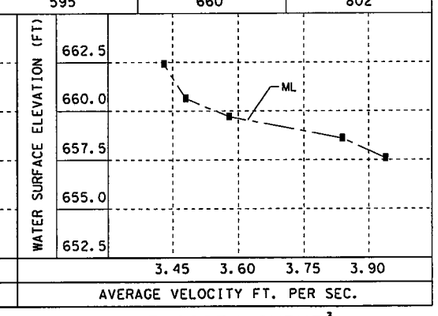

VELOCITY CURVE[3]

STATE OF TEXAS
JOHN A. TERRY
51729
REGISTERED PROFESSIONAL ENGINEER

7-5-12

H & H RESOURCES, INC (TBPE F-3678)

ABBREVIATIONS:

USACE U.S. ARMY CORPS OF ENGINEERS
NRCS NATURAL RESOURCE CONSERVATION SERVICE
USGS U.S. GEOLOGIC SURVEY

NOTES:

1. HYDROLOGIC ANALYSIS PERFORMED USING SNYDER'S UNIT HYDROGRAPH METHOD, MODELED IN HEC-HMS VERSION 3.5. INITIAL AND CONSTANT LOSSES WERE ESTIMATED USING USACE PROCEDURES. LAG TIME WAS ESTIMATED USING USACE URBANIZATION CURVES AS PRESENTED IN THE NORTH CENTRAL TEXAS COUNCIL OF GOVERNMENTS (NCTCOG) INTERGRATED STORM WATER MANAGEMENT (iSWM) TECHNICAL MANUAL.
2. PRECIPITATION INFORMATION FOR TARRANT COUNTY WAS OBTAINED FROM THE 2004 "ATLAS OF DEPTH-DURATION-FREQUENCY OF PRECIPITATION ANNUAL MAXIMA FOR TEXAS", EXCEPT THAT 2-YR RAINFALL DATA WAS OBTAINED FROM THE NATIONAL WEATHER SERVICE TP-40. DIFFERENCES BETWEEN TP-40 AND THE 2004 ATLAS ARE MINIMAL AT THE 2-YR EVENT.
3. THE VALUES FOR THE CONVEYANCE AND VELOCITY CURVES ARE FROM THE US FACE OF CULVERT.

H & H RESOURCES
CIVIL ENGINEERS
TBPE REGISTRATION NO. F-3678

Texas Department of Transportation
© 2012

IH 35W FROM NORTH TARRANT PKWY TO IH 820

HYDRAULIC DATA SHEET
TRIB TO STREAM BFC-2A

SHEET 1 OF 2

DESIGN	FED. RD. DIV. NO.	FEDERAL AID PROJECT NO.		HIGHWAY NO.
JKB	6	(SEE TITLE SHEET)		IH 35W
GRAPHICS	STATE	DISTRICT	COUNTY	SHEET NO.
CA	TEXAS	FTW	TARRANT	1139
CHECK	CONTROL	SECTION	JOB	
JKB	0014	16	255, ETC.	
CHECK				
JT				

FILENAME: S3BD*HDS*BFC2A*01.dgn
DRAWING DATE: 7/13/2012

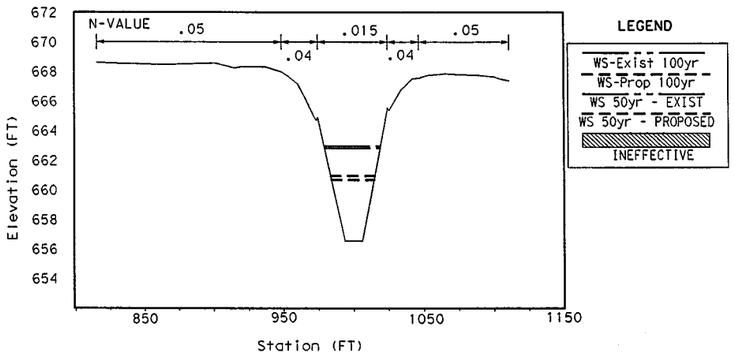

UPSTREAM APPROACH: SECTION 578

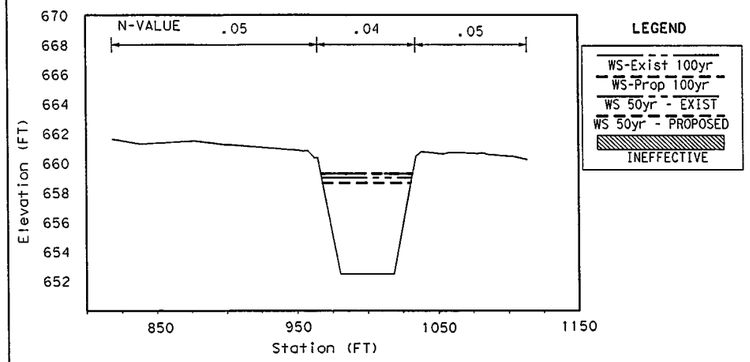

DOWNSTREAM AT BRIDGE: SECTION 260

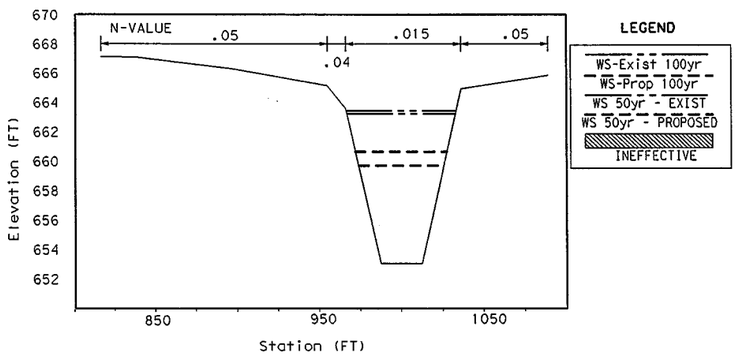

UPSTREAM AT BRIDGE: SECTION 539

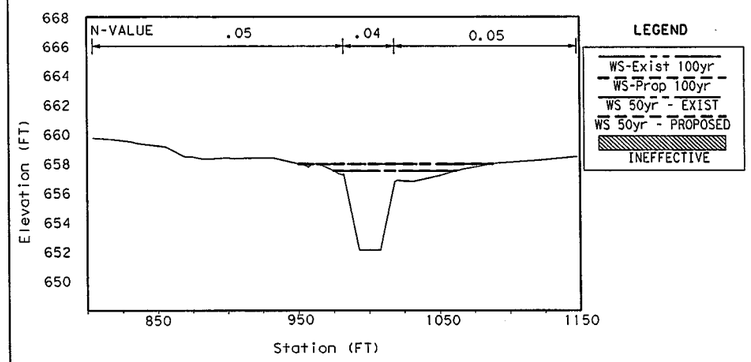

DOWNSTREAM EXIT: SECTION 38

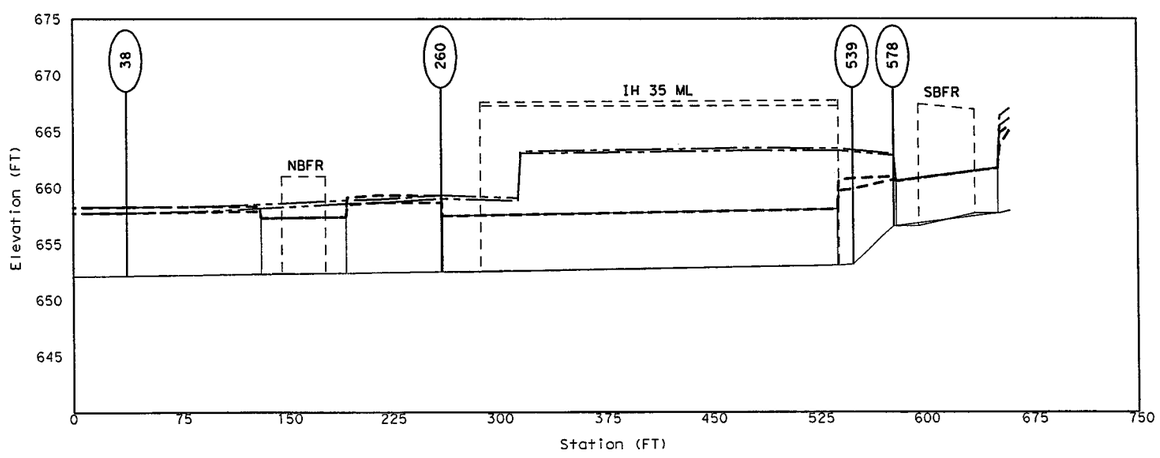

STREAM PROFILE

Upstream Approach: Station 578

	Design Flow (50-yr / 2% AEP) Q= 595 CFS						Check Event (100-yr / 1% AEP) Q= 660 CFS					
	Existing Conditions W.S. Elev. = 662.85			Proposed Conditions W.S. Elev. = 660.70			Existing Conditions W.S. Elev. = 662.99			Proposed Conditions W.S. Elev. = 660.98		
	L.O.B.	CHAN.	R.O.B.	L.O.B.	CHAN.	R.O.B.	L.O.B.	CHAN.	R.O.B.	L.O.B.	CHAN.	R.O.B.
AREA		78.53			51.66			80.24			55.14	
W.P.		12.50			12.50			12.50			12.50	
R		6.28			4.13			6.42			4.41	
S		0.000503			0.002039			0.000577			0.002017	
n	0.050	0.015	0.050	0.050	0.015	0.050	0.050	0.015	0.050	0.050	0.015	0.050
Q		594.3			595.1			659.3			659.9	
V		7.57			11.52			8.22			11.97	
	Avg. Vel.	7.57	FPS	Avg. Vel. =	11.52	FPS	Avg. Vel. =	8.22	FPS	Avg. Vel. =	11.97	FPS

Upstream at Bridge: Station 539

	Design Flow (50-yr / 2% AEP) Q= 595 CFS						Check Event (100-yr / 1% AEP) Q= 660 CFS					
	Existing Conditions W.S. Elev. = 663.25			Proposed Conditions W.S. Elev. = 659.72			Existing Conditions W.S. Elev. = 663.47			Proposed Conditions W.S. Elev. = 660.66		
	L.O.B.	CHAN.	R.O.B.	L.O.B.	CHAN.	R.O.B.	L.O.B.	CHAN.	R.O.B.	L.O.B.	CHAN.	R.O.B.
AREA	2.67	271.15	0.13		166.27		4.16	281.37	0.49		189.76	
W.P.	6.37	51.99	1.18		25.00		7.95	51.99	2.29		25.00	
R	0.42	5.22	0.11		6.65		0.52	5.41	0.21		7.59	
S		0.000054			0.000104			0.000059			0.000083	
n	0.050	0.015	0.050	0.050	0.015	0.050	0.050	0.015	0.050	0.050	0.015	0.050
Q	0.41	593.9	0.01		595.1		0.77	658.5	0.05		659.9	
V	0.15	2.19	0.06		3.58		0.18	2.34	0.10		3.48	
	Avg. Vel.	2.17	FPS	Avg. Vel. =	3.58	FPS	Avg. Vel. =	2.31	FPS	Avg. Vel. =	3.48	FPS
				US Face of Bridge W.S. Elev. = 658.07						US Face of Bridge W.S. Elev. = 658.07		
				Avg. Vel.	5.67	FPS				Avg. Vel.	6.28	FPS

Downstream at Bridge: Station 260

	Design Flow (50-yr / 2% AEP) Q= 595 CFS						Check Event (100-yr / 1% AEP) Q= 660 CFS					
	Existing Conditions W.S. Elev. = 659.02			Proposed Conditions W.S. Elev. = 658.66			Existing Conditions W.S. Elev. = 659.32			Proposed Conditions W.S. Elev. = 659.30		
	L.O.B.	CHAN.	R.O.B.	L.O.B.	CHAN.	R.O.B.	L.O.B.	CHAN.	R.O.B.	L.O.B.	CHAN.	R.O.B.
AREA		186.82			154.32			204.96			170.29	
W.P.		59.57			25.00			62.09			25.00	
R		3.14			6.17			3.30			6.81	
S		0.001597			0.000952			0.001526			0.000843	
n	0.050	0.040	0.050	0.050	0.040	0.050	0.050	0.040	0.050	0.050	0.040	0.050
Q		594.3			595.1			659.3			659.9	
V		3.18			3.86			3.22			3.88	
	Avg. Vel.	3.18	FPS	Avg. Vel. =	3.86	FPS	Avg. Vel. =	3.22	FPS	Avg. Vel. =	3.88	FPS

Downstream (Exit) : Station 38

	Design Flow (50-yr / 2% AEP) Q= 595 CFS						Check Event (100-yr / 1% AEP) Q= 660 CFS					
	Existing Conditions W.S. Elev. = 657.77			Proposed Conditions W.S. Elev. = 657.77			Existing Conditions W.S. Elev. = 658.27			Proposed Conditions W.S. Elev. = 658.27		
	L.O.B.	CHAN.	R.O.B.	L.O.B.	CHAN.	R.O.B.	L.O.B.	CHAN.	R.O.B.	L.O.B.	CHAN.	R.O.B.
AREA	1.21	123.42	21.55	1.21	149.70	21.55	8.52	141.44	49.49	8.52	167.72	49.49
W.P.	7.23	37.69	43.84	7.23	38.47	43.84	30.16	37.69	70.11	30.16	38.47	70.11
R	0.17	3.27	0.49	0.17	3.89	0.49	0.28	3.75	0.71	0.28	4.36	0.71
S		0.003191			0.001764			0.002224			0.001356	
n	0.050	0.040	0.050	0.050	0.040	0.050	0.050	0.040	0.050	0.050	0.040	0.050
Q	0.62	571.2	22.52	0.46	577.9	16.75	5.94	598.4	54.98	4.64	612.3	42.94
V	0.51	4.63	1.05	0.38	3.86	0.78	0.70	4.23	1.11	0.54	3.65	0.87
	Avg. Vel.	4.07	FPS	Avg. Vel. =	3.45	FPS	Avg. Vel. =	3.31	FPS	Avg. Vel. =	2.92	FPS

ABBREVIATIONS:

USACE U.S. ARMY CORPS OF ENGINEERS
NRCS NATURAL RESOURCE CONSERVATION SERVICE
USGS U.S. GEOLOGIC SURVEY

COMMENTS:

1. AS SHOWN ON FEMA MAP PANEL 48439C0065K, DATED SEPTEMBER 25, 2009, THIS TRIBUTARY TO STREAM BFC-2A IS A ZONE AT THE PROJECT SITE, DOWNSTREAM FROM IH35W, THE STREAM IS DESIGNATED AS ZONE A, FLOODPLAIN WITH NO DETAILED STUDY; NO RISE IN 100-YR WATER SURFACE ELEVATIONS OUTSIDE THE TXDOT ROW, DUE TO PROPOSED CONDITIONS.
2. HYDRAULIC ANALYSIS PERFORMED USING HEC-RAS VERSION 4.0. EXISTING AND PROPOSED CONDITION MODELS WERE CREATED USING SURVEYED DATA, TOPOGRAPHIC INFORMATION, AND PLAN AND PROFILE SHEETS.
3. DOWNSTREAM BOUNDARY CONDITION IS BASED ON KNOWN WATER SURFACE ELEVATIONS FOR THE STREAM BFC-2A FEMA FIS AT RS 6570; STARTING WATER SURFACE ELEVATIONS FOR THE DESIGN FLOW RATES WERE INTERPOLATED FROM A RATING CURVE BASED ON THE FEMA MODELED FLOW RATES.
4. HYDROLOGIC AND HYDRAULIC MODELING PROVIDED TO THE CITY OF FORT WORTH FLOODPLAIN ADMINISTRATOR ON _____.

STATE OF TEXAS
JAIME K. BENOLIEL
96693
LICENSED
PROFESSIONAL ENGINEER

7/9/12
H & H RESOURCES, INC (TBPE F-3678)

H & H RESOURCES
CIVIL ENGINEERS
TBPE REGISTRATION NO. F-3678

Texas Department of Transportation
© 2012

IH 35W FROM NORTH TARRANT PKWY TO IH 820

HYDRAULIC DATA SHEET
TRIB TO STREAM BFC-2A
IH 35W MAIN LANES

SHEET 2 OF 2

DESIGN	FED. RD. DIV. NO.	FEDERAL AID PROJECT NO.		HIGHWAY NO.
JKB	6	(SEE TITLE SHEET)		IH 35W
GRAPHICS CA	STATE	DISTRICT	COUNTY	SHEET NO.
CHECK JKB	TEXAS	FTW	TARRANT	1140
CHECK JT	CONTROL 0014	SECTION 16	JOB 255, ETC.	

FILENAME: S3BD*HDS*BFC2A*02.dgn
DRAWING DATE: 7/13/2012

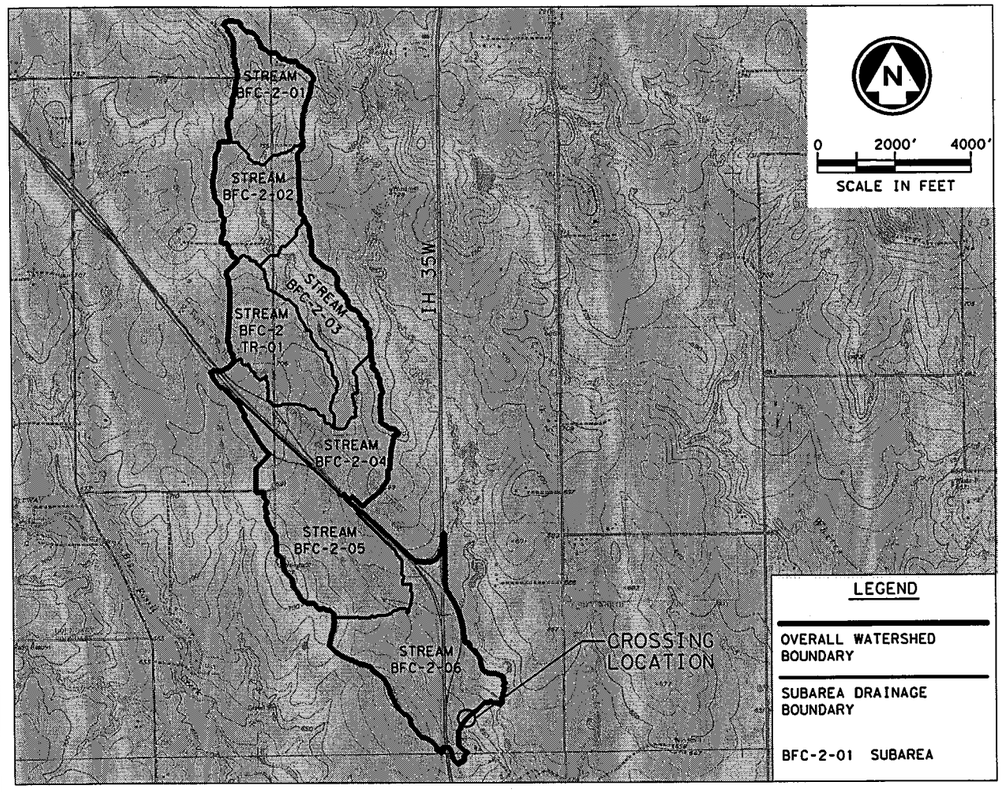

DRAINAGE AREA MAP

1" = 4000'

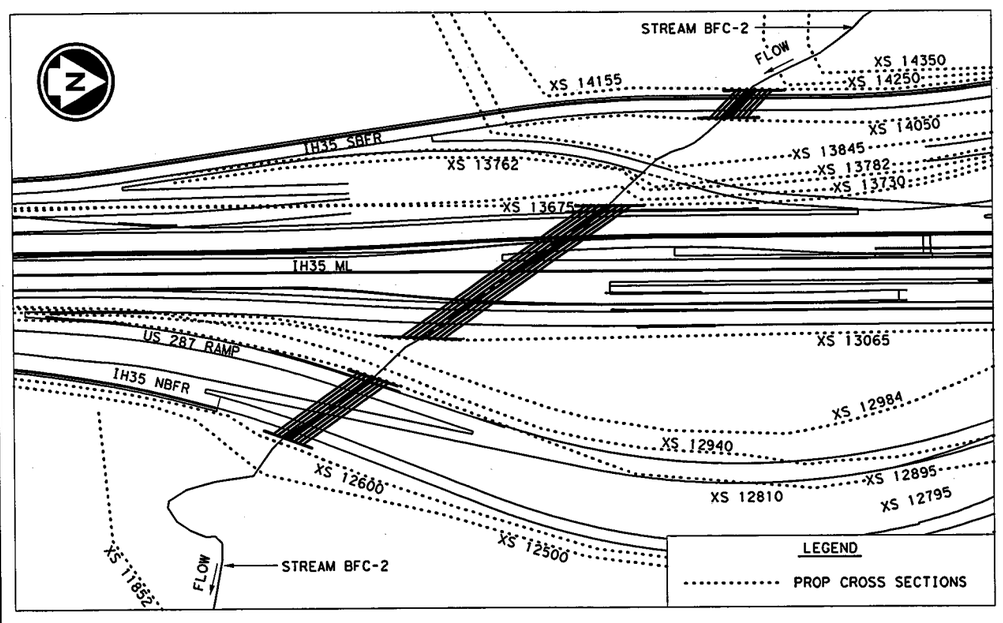

HEC-RAS CROSS SECTION LOCATIONS

1" = 400'

HYDROLOGIC COMPUTATIONS

HYDROLOGIC METHOD:
SNYDER'S UNIT HYDROGRAPH, FREQUENCY STORM (HEC-HMS 3.5)

DRAINAGE AREA: 1.932 MI^2

DESIGN FREQUENCY: 25 YR FRONTAGE ROAD, 25 YR RAMPS, 50 YR MAIN LANE

SUMMARY OF SOIL CONDITIONS AND LAND USE: SOIL DATA OBTAINED FROM THE NRCS THROUGH ITS WEB SOIL DATA UTILITY (hhtp://soildatamart.nrcs.usda.gov/). THE MAJORITY OF SURFACE SOILS IN THE BFC-2 WATERSHED ARE CLAYS AND CLAY LOAMS, WITH THE SANGER CLAY SOILS COMPRISING APPROXIMATELY 57.0% OF THE WATERSHED. OTHER MAJOR SOIL GROUPS INCLUDE THE SLIDELL CLAY SOILS (24.3%), PURVES CLAY SOILS (8.5%), AND ALEDO GRAVELLY CLAY LOAM SOILS (6.7%). CURRENT LAND USE WITHIN THE BFC-2 WATERSHED CONSISTS PRIMARILY OF LARGE OPEN TRACTS OF PATURE OR RANGELAND, WITH AREAS OF SINGLE FAMILY RESIDENTIAL DEVELOPMENT AND SMALL POCKETS OF INDUSTRIAL USE. THERE ARE NO SUBSTANTIAL FLOOD CONTROL OR DETENTION FACILITIES WITHIN THE WATERSHED, AND SURFACE WATER COMPRISED APPROXIMATELY 0.3% OF THE STUDY WATERSHED. THE MAJOR LAND USES BASED ON THE 2005 NCTCOG LAND USE COVERAGE ARE VACANT (74.9%), TRANSPORTATION (13.9%), SINGLE FAMILY RESIDENTIAL (3.3%), AND INDUSTRIAL (3.1%).

PRECIPITATION INFORMATION

FREQUENCY (YR)	24 HR RAINFALL DEPTH (IN)
10	6.33
25	7.45
50	8.44
100	9.46
500	11.83

SUMMARY OF HEC-HMS PARAMETERS

SUBAREA NAME	Area (sq.mi)	Lag (hrs)	% Imp.	Peaking Coefficient	25-YR Loss rate (in/hr)		50-YR Loss rate (in/hr)		100-YR Loss rate (in/hr)	
					Initial	Constant	Initial	Constant	Initial	Constant
Stream BFC-2-06	0.407	0.404	8	0.719	0.997	0.124	0.875	0.104	0.770	0.074
Stream BFC-2 Tr-01	0.247	0.365	6	0.719	0.996	0.124	0.874	0.104	0.770	0.074
Stream BFC-2-04	0.264	0.316	5	0.719	0.980	0.123	0.863	0.103	0.763	0.073
Stream BFC-2-03	0.208	0.513	4	0.719	1.024	0.126	0.895	0.106	0.782	0.076
Stream BFC-2-02	0.207	0.263	8	0.719	0.992	0.124	0.871	0.104	0.768	0.074
Stream BFC-2-01	0.197	0.267	15	0.719	1.056	0.129	0.919	0.109	0.796	0.079

SUMMARY OF DISCHARGES

	TxDOT[4]					FEMA[4]
INTERVAL	10 YR	25 YR	50 YR	100 YR	500 YR	100 YR
FLOW (CFS)	1160	1569	1826	2086	2567	3150

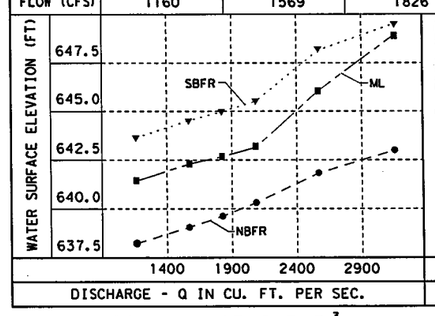

CONVEYANCE CURVE[3]

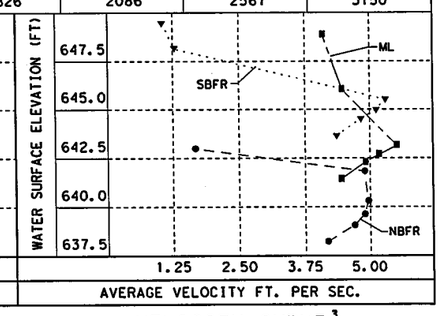

VELOCITY CURVE[3]

ABBREVIATIONS:

FEMA FEDERAL EMERGENCY MANAGEMENT AGENCY
USACE U.S. ARMY CORPS OF ENGINEERS
NRCS NATURAL RESOURCE CONSERVATION SERVICE
USGS U.S. GEOLOGIC SURVEY

NOTES:

1. HYDROLOGIC ANALYSIS PERFORMED USING SNYDER'S UNIT HYDROGRAPH METHOD, MODELED IN HEC-HMS VERSION 3.5. INITIAL AND CONSTANT LOSSES WERE ESTIMATED USING USACE PROCEDURES. LAG TIME WAS ESTIMATED USING USACE URBANIZATION CURVES AS PRESENTED IN THE NORTH CENTRAL TEXAS COUNCIL OF GOVERNMENTS (NCTCOG) INTERGRATED STORM WATER MANAGEMENT (iSWM) TECHNICAL MANUAL.
2. PRECIPITATION INFORMATION FOR TARRANT COUNTY WAS OBTAINED FROM THE 2004 "ATLAS OF DEPTH-DURATION-FREQUENCY OF PRECIPITATION ANNUAL MAXIMA FOR TEXAS", EXCEPT THAT 2-YR RAINFALL DATA WAS OBTAINED FROM THE NATIONAL WEATHER SERVICE TP-40. DIFFERENCES BETWEEN TP-40 AND THE 2004 ATLAS ARE MINIMAL AT THE 2-YR EVENT.
3. THE VALUES FOR THE CONVEYANCE AND VELOCITY CURVES ARE FROM THE US FACE OF CULVERT.
4. TxDOT DESIGN FLOWS WERE DEVELOPED BY VERIFICATION OF 2006 HYDROLOGIC MODELS FROM USACE. FEMA 100-YR FLOW RATE IS APPROXIMATELY 50% HIGHER THAN TxDOT (USACE) 100-YR FLOW RATE. THE FEMA FLOW COULD NOT BE SUBSTANTIATED BY THIS STUDY AND IS CONSIDERED EXCESSIVE; THEREFORE, TxDOT (USACE) 100-YR FLOW RATE IS USED AS CHECK EVENT. FOR COMPLETE DISCUSSION, REFER TO REPORT ENTITLED, "DRAINAGE REPORT - IH 35W FROM NORTH OF US 287 TO IH 820", DATED APRIL 2012 BY H & H RESOURCES, INC.

STATE OF TEXAS
JOHN A. TERRY
51729
REGISTERED PROFESSIONAL ENGINEER

7-27-12

H & H RESOURCES, INC (TBPE F-3678)

H & H RESOURCES
CIVIL ENGINEERS
TBPE REGISTRATION NO. F-3678

Texas Department of Transportation
© 2012

IH 35W FROM NORTH TARRANT PKWY TO IH 820

HYDRAULIC DATA SHEET
STREAM BFC-2

SHEET 1 OF 4

DESIGN	FED.RD. DIV.NO.	FEDERAL AID PROJECT NO.		HIGHWAY NO.
JKB	6	(SEE TITLE SHEET)		IH 35W
GRAPHICS CA	STATE	DISTRICT	COUNTY	SHEET NO.
CHECK JKB	TEXAS	FTW	TARRANT	1141
CHECK JT	CONTROL	SECTION	JOB	
	0014	16	255, ETC.	

FILENAME: S3BD*HDS*BFC2*01.dgn

DRAWING DATE: 7/13/2012

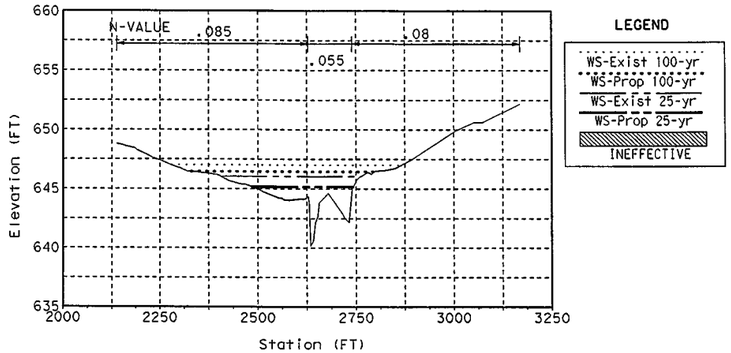

UPSTREAM APPROACH: STATION 14250

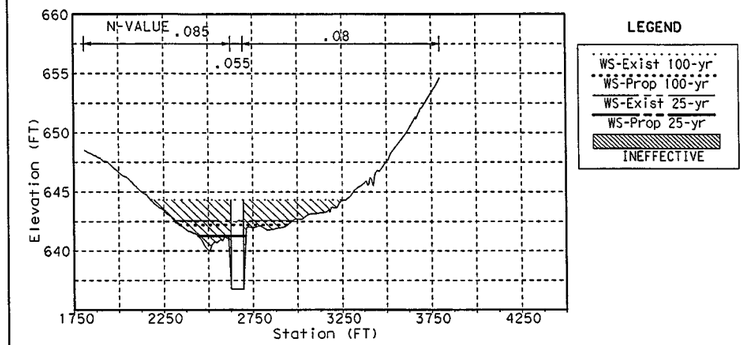

DOWNSTREAM AT CULVERT: STATION 14050

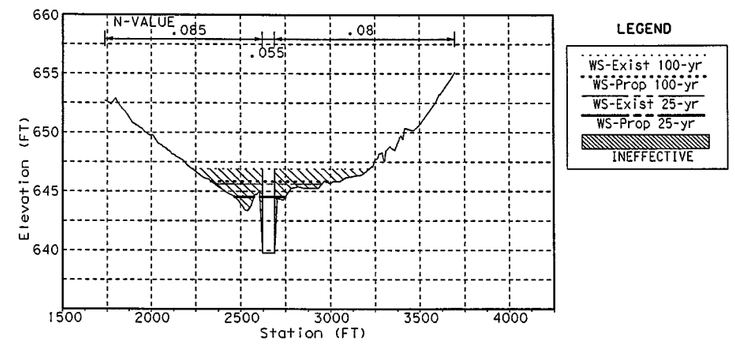

UPSTREAM AT CULVERT: STATION 14155

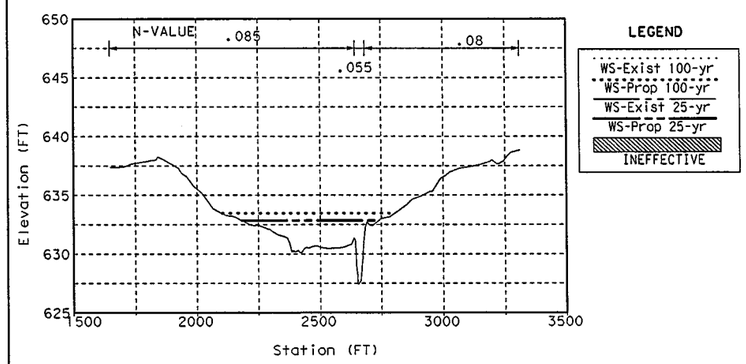

DOWNSTREAM EXIT: STATION 12500

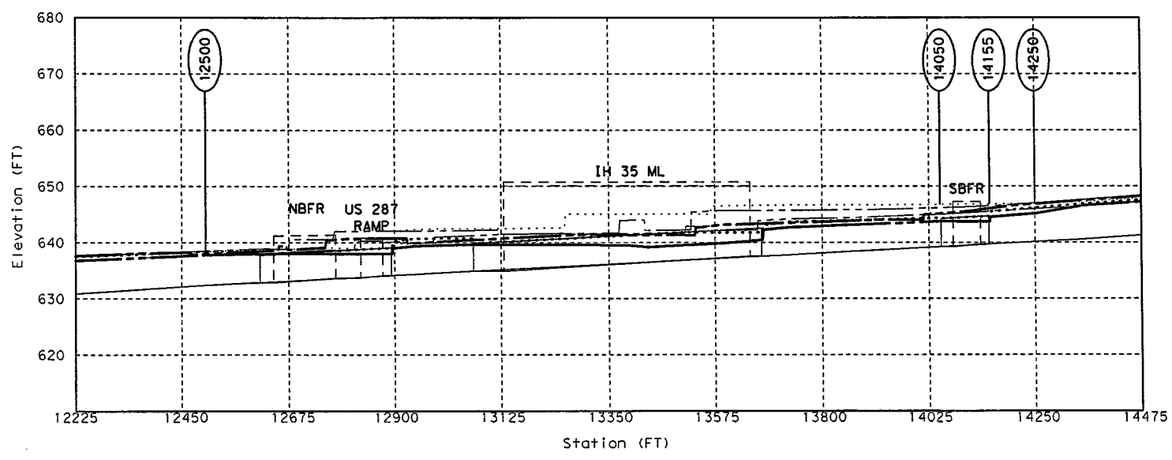

STREAM PROFILE

COMMENTS:

1. AS SHOWN ON FEMA MAP PANEL 48439C0180, DATED SEPTEMBER 25, 2009, STREAM BFC-2 AT THE PROJECT SITE IS A ZONE AE, DETAILED STUDY OF 100-YR FLOODPLAIN; A FLOODWAY IS ALSO DELINEATED IN THE FEMA FLOOD INSURANCE STUDY (FIS). ANALYSIS USING THE 100-YR FLOW RATE INDICATES NO RISE IN FLOODWAY WATER SURFACE ELEVATIONS OUTSIDE THE TXDOT ROW, DUE TO PROPOSED CONDITIONS.
2. HYDRAULIC ANALYSIS PERFORMED USING HEC-RAS VERSION 4.0. THE FEMA EFFECTIVE FIS MODEL WAS OBTAINED AND REVISED TO CREATE THE EXISTING AND PROPOSED CONDITION MODELS.
3. DOWNSTREAM BOUNDARY CONDITION IS BASED ON KNOWN WATER SURFACE ELEVATIONS FOR THE FEMA FIS AT RS 1140; STARTING WATER SURFACE ELEVATIONS FOR THE DESIGN FLOW RATES WERE INTERPOLATED FROM A RATING CURVE BASED ON THE FEMA MODELED FLOW RATES.
4. HYDROLOGIC AND HYDRAULIC MODELING PROVIDED TO THE CITY OF FORT WORTH FLOODPLAIN ADMINISTRATOR ON _____.

Upstream Approach: Station 14250

	Design Flow (25-yr / 4% AEP) Q= 1569 CFS						Check Event (100-yr / 1% AEP) Q= 2086 CFS					
	Existing Conditions W.S. Elev. = 646.04			Proposed Conditions W.S. Elev. = 645.17			Existing Conditions W.S. Elev. = 647.00			Proposed Conditions W.S. Elev. = 646.21		
	L.O.B.	CHAN.	R.O.B.	L.O.B.	CHAN.	R.O.B.	L.O.B.	CHAN.	R.O.B.	L.O.B.	CHAN.	R.O.B.
AREA	273.88	317.38	8.56	110.58	220.08	0.19	557.57	425.74	79.64	313.37	336.92	13.12
W.P.	221.44	114.82	21.87	143.53	114.82	2.73	349.43	114.82	124.56	235.43	114.82	30.40
R	1.24	2.76	0.39	0.77	1.92	0.07	1.60	3.71	0.64	1.33	2.93	0.43
S	0.004854			0.021105			0.002469			0.006731		
n	0.850	0.055	0.080	0.085	0.055	0.080	0.085	0.055	0.080	0.085	0.055	0.080
Q	384.36	1176.7	5.93	236.02	1332.9	0.08	661.32	1369.1	54.55	543.87	1530.7	11.42
V	1.40	3.71	0.69	2.13	6.06	0.45	1.19	3.22	0.68	1.74	4.54	0.87
	Avg. Vel. 2.61 FPS			Avg. Vel. = 4.74 FPS			Avg. Vel. = 1.96 FPS			Avg. Vel. = 3.14 FPS		

Upstream at Culvert: Station 14155

	Design Flow (25-yr / 4% AEP) Q= 1569 CFS						Check Event (100-yr / 1% AEP) Q= 2086 CFS					
	Existing Conditions W.S. Elev. = 645.62			Proposed Conditions W.S. Elev. = 644.53			Existing Conditions W.S. Elev. = 646.90			Proposed Conditions W.S. Elev. = 645.53		
	L.O.B.	CHAN.	R.O.B.	L.O.B.	CHAN.	R.O.B.	L.O.B.	CHAN.	R.O.B.	L.O.B.	CHAN.	R.O.B.
AREA	275.97	276.42	152.97		324.87		675.04	383.84	694.77		392.73	
W.P.	247.36	88.35	263.80		68.00		373.12	88.35	527.38		68.00	
R	1.12	3.13	0.58		4.78		1.81	4.34	1.32		5.78	
S	0.004586			0.003972			0.001182			0.003730		
n	0.085	0.055	0.080	0.085	0.055	0.080	0.085	0.055	0.080	0.085	0.055	0.080
Q	351.42	1081.8	133.80		1569.0		602.44	949.4	533.22		2086.0	
V	1.27	3.91	0.87		4.83		0.89	2.47	0.77		5.31	
	Avg. Vel. 2.22 FPS			Avg. Vel. = 4.83 FPS			Avg. Vel. = 1.19 FPS			Avg. Vel. = 5.31 FPS		
				US Face of Bridge W.S. Elev. = 643.76						US Face of Bridge W.S. Elev. = 644.59		
				Avg. Vel. 6.98 FPS						Avg. Vel. 7.68 FPS		

Downstream at Culvert: Station 14050

	Design Flow (25-yr / 4% AEP) Q= 1569 CFS						Check Event (100-yr / 1% AEP) Q= 2086 CFS					
	Existing Conditions W.S. Elev. = 645.08			Proposed Conditions W.S. Elev. = 643.78			Existing Conditions W.S. Elev. = 646.83			Proposed Conditions W.S. Elev. = 644.43		
	L.O.B.	CHAN.	R.O.B.	L.O.B.	CHAN.	R.O.B.	L.O.B.	CHAN.	R.O.B.	L.O.B.	CHAN.	R.O.B.
AREA	418.16	151.74	184.38		305.88		1079.23	221.36	1028.42		350.13	
W.P.	316.96	41.86	310.88		68.00		445.53	41.86	605.85		68.00	
R	1.32	3.62	0.59		4.50		2.42	5.29	1.70		5.15	
S	0.005630			0.004855			0.000690			0.005470		
n	0.085	0.055	0.080	0.085	0.055	0.080	0.085	0.055	0.080	0.085	0.055	0.080
Q	659.74	725.9	181.39		1569.0		893.99	476.9	714.10		2086.0	
V	1.58	4.78	0.98		5.13		0.83	2.15	0.69		5.96	
	Avg. Vel. 2.08 FPS			Avg. Vel. = 5.13 FPS			Avg. Vel. = 0.90 FPS			Avg. Vel. = 5.96 FPS		

Downstream (Exit) : Station 12500

	Design Flow (25-yr / 4% AEP) Q= 1569 CFS						Check Event (100-yr / 1% AEP) Q= 2086 CFS					
	Existing Conditions W.S. Elev. = 637.84			Proposed Conditions W.S. Elev. = 637.85			Existing Conditions W.S. Elev. = 638.46			Proposed Conditions W.S. Elev. = 638.46		
	L.O.B.	CHAN.	R.O.B.	L.O.B.	CHAN.	R.O.B.	L.O.B.	CHAN.	R.O.B.	L.O.B.	CHAN.	R.O.B.
AREA	767.31	156.35	15.13	769.15	156.51	15.34	1075.55	181.70	69.86	1076.48	181.77	70.06
W.P.	463.57	42.68	53.51	464.33	42.68	53.73	543.71	42.68	119.92	543.88	42.68	120.04
R	1.66	3.66	0.28	1.66	3.67	0.29	1.98	4.26	0.58	1.98	4.26	0.58
S	0.002934			0.002927			0.002305			0.002302		
n	0.085	0.055	0.080	0.085	0.055	0.080	0.085	0.055	0.080	0.085	0.055	0.080
Q	1016.69	543.8	6.56	1018.33	544.0	6.69	1422.46	619.1	43.45	1423.30	619.1	43.61
V	1.33	3.48	0.43	1.32	3.48	0.44	1.32	3.41	0.62	1.32	3.41	0.62
	Avg. Vel. 1.67 FPS			Avg. Vel. = 1.67 FPS			Avg. Vel. = 1.57 FPS			Avg. Vel. = 1.57 FPS		

ABBREVIATIONS:

USACE U.S. ARMY CORPS OF ENGINEERS
NRCS NATURAL RESOURCE CONSERVATION SERVICE
USGS U.S. GEOLOGIC SURVEY

STATE OF TEXAS
JAIME K. BENOLIEL
96693
LICENSED
PROFESSIONAL ENGINEER

7/9/12

H & H RESOURCES, INC (TBPE F-3678)

H & H RESOURCES
CIVIL ENGINEERS
TBPE REGISTRATION NO. F-3678

Texas Department of Transportation
© 2012

IH 35W FROM NORTH TARRANT PKWY TO IH 820

HYDRAULIC DATA SHEET
STREAM BFC-2
IH 35W SB FRONTAGE ROAD

SHEET 2 OF 4

DESIGN	FED. RD. DIV. NO.	FEDERAL AID PROJECT NO.		HIGHWAY NO.
JKB	6	(SEE TITLE SHEET)		IH 35W
GRAPHICS CA	STATE	DISTRICT	COUNTY	SHEET NO.
CHECK JKB	TEXAS	FTW	TARRANT	1142
CHECK JT	CONTROL 0014	SECTION 16	JOB 255, ETC.	

FILENAME: S3BD*HDS*BFC2*02.dgn
DRAWING DATE: 7/13/2012

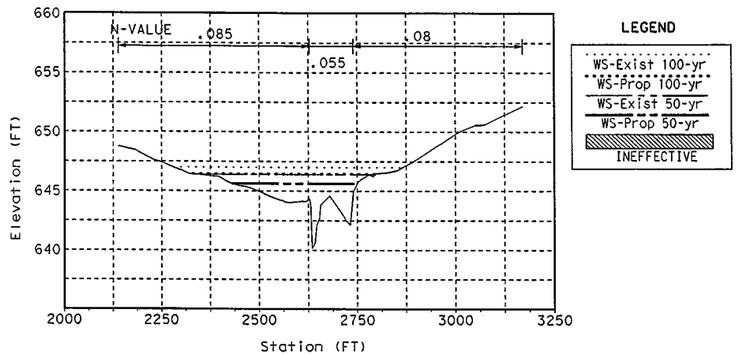

UPSTREAM APPROACH: STATION 14250

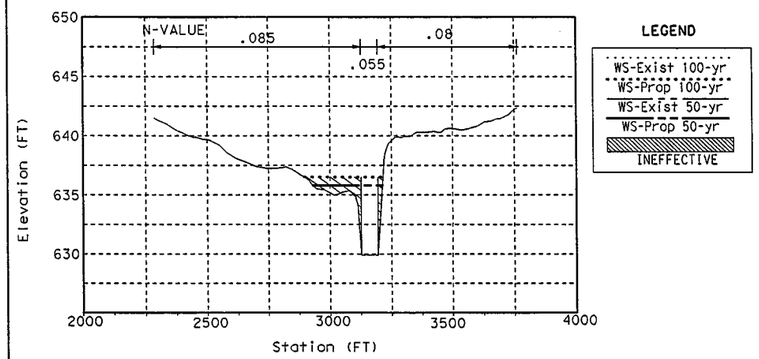

DOWNSTREAM AT CULVERT: STATION 13065

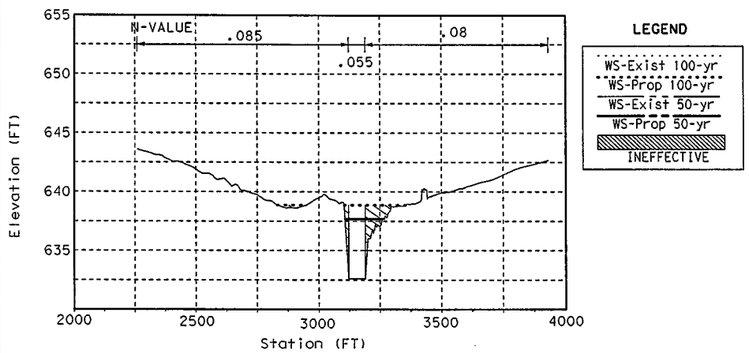

UPSTREAM AT CULVERT: STATION 13675

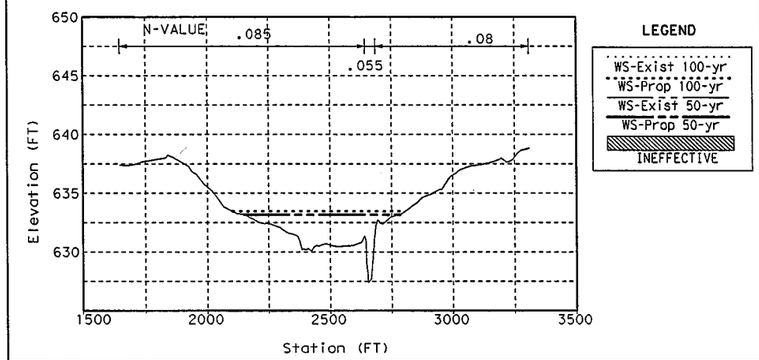

DOWNSTREAM EXIT: STATION 12500

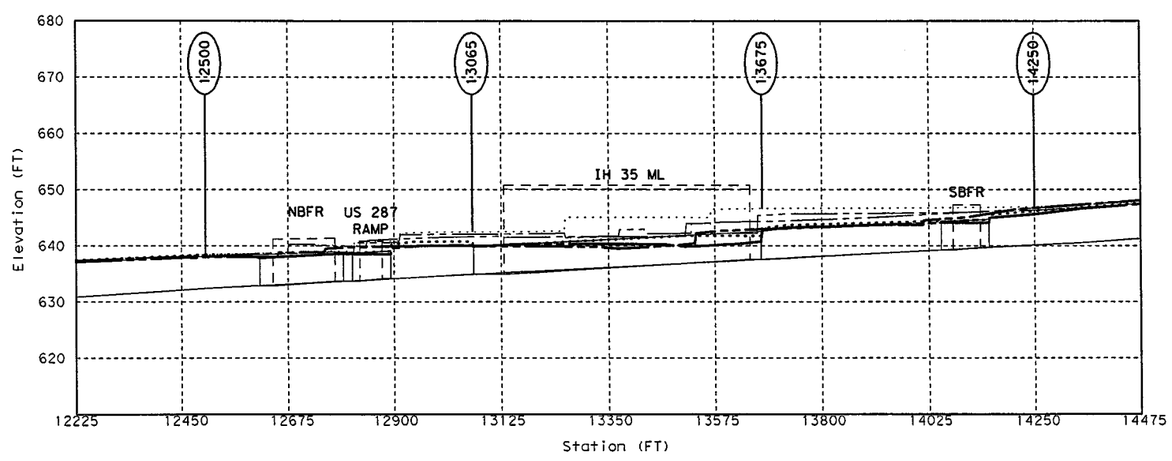

STREAM PROFILE

COMMENTS:

1. AS SHOWN ON FEMA MAP PANEL 48439C0180, DATED SEPTEMBER 25, 2009, STREAM BFC-2 AT THE PROJECT SITE IS A ZONE AE, DETAILED STUDY OF 100-YR FLOODPLAIN; A FLOODWAY IS ALSO DELINEATED IN THE FEMA FLOOD INSURANCE STUDY (FIS). ANALYSIS USING THE 100-YR FLOW RATE INDICATES NO RISE IN FLOODWAY WATER SURFACE ELEVATIONS OUTSIDE THE TXDOT ROW, DUE TO PROPOSED CONDITIONS.

2. HYDRAULIC ANALYSIS PERFORMED USING HEC-RAS VERSION 4.0. THE FEMA EFFECTIVE FIS MODEL WAS OBTAINED AND REVISED TO CREATE THE EXISTING AND PROPOSED CONDITION MODELS.

3. DOWNSTREAM BOUNDARY CONDITION IS BASED ON KNOWN WATER SURFACE ELEVATIONS FOR THE FEMA FIS AT RS 1140; STARTING WATER SURFACE ELEVATIONS FOR THE DESIGN FLOW RATES WERE INTERPOLATED FROM A RATING CURVE BASED ON THE FEMA MODELED FLOW RATES.

4. HYDROLOGIC AND HYDRAULIC MODELING PROVIDED TO THE CITY OF FORT WORTH FLOODPLAIN ADMINISTRATOR ON _____.

Upstream Approach: Station 14250

	Design Flow (50-yr / 2% AEP) Q= 1826 CFS						Check Event (100-yr / 1% AEP) Q= 2086 CFS					
	Existing Conditions W.S. Elev. = 646.39			Proposed Conditions W.S. Elev. = 645.63			Existing Conditions W.S. Elev. = 647.00			Proposed Conditions W.S. Elev. = 646.21		
	L.O.B.	CHAN.	R.O.B.	L.O.B.	CHAN.	R.O.B.	L.O.B.	CHAN.	R.O.B.	L.O.B.	CHAN.	R.O.B.
AREA	360.27	357.25	20.65	188.36	271.82	2.97	557.57	425.74	79.64	313.37	336.92	13.12
W.P.	280.26	114.82	54.82	196.47	114.82	9.34	349.43	114.82	124.56	235.43	114.82	30.40
R	1.29	3.11	0.38	0.96	2.37	0.32	1.60	3.71	0.64	1.33	2.93	0.43
S	0.004179			0.012594			0.002469			0.006731		
n	0.085	0.055	0.080	0.085	0.055	0.080	0.085	0.055	0.080	0.085	0.055	0.080
Q	481.31	1329.8	12.93	359.28	1463.8	2.88	661.32	1369.1	54.55	543.87	1530.7	11.42
V	1.34	3.72	0.63	1.91	5.39	0.97	1.19	3.22	0.68	1.74	4.54	0.87
	Avg. Vel. 2.47 FPS			Avg. Vel. = 3.94 FPS			Avg. Vel. = 1.96 FPS			Avg. Vel. = 3.14 FPS		

Upstream at Bridge: Ex Station 13666 / Pr Station 13675

	Design Flow (50-yr / 2% AEP) Q= 1826 CFS						Check Event (100-yr / 1% AEP) Q= 2086 CFS					
	Existing Conditions W.S. Elev. = 645.47			Proposed Conditions W.S. Elev. = 642.80			Existing Conditions W.S. Elev. = 646.71			Proposed Conditions W.S. Elev. = 643.16		
	L.O.B.	CHAN.	R.O.B.	L.O.B.	CHAN.	R.O.B.	L.O.B.	CHAN.	R.O.B.	L.O.B.	CHAN.	R.O.B.
AREA		506.76			352.80		1156.95	881.65	1150.13		377.21	
W.P.		61.91			68.00		592.34	105.61	567.60		68.00	
R		8.19			5.19		1.95	8.35	2.03		5.55	
S	0.001076			0.004086			0.000162			0.004267		
n	0.085	0.055	0.080	0.085	0.055	0.080	0.085	0.055	0.080	0.085	0.055	0.080
Q		1824.0			1826.0		402.18	1247.5	435.34		2086.0	
V		3.60			5.18		0.35	1.41	0.38		5.53	
	Avg. Vel. 3.60 FPS			Avg. Vel. = 5.18 FPS			Avg. Vel. = 0.65 FPS			Avg. Vel. = 5.53 FPS		
				US Face of Bridge W.S. Elev. = 640.81						US Face of Bridge W.S. Elev. = 641.8		
				Avg. Vel. 10.16 FPS						Avg. Vel. 8.87 FPS		

Downstream at Culvert: Ex Station 13120 / Pr Station 13065

	Design Flow (50-yr / 2% AEP) Q= 1826 CFS						Check Event (100-yr / 1% AEP) Q= 2086 CFS					
	Existing Conditions W.S. Elev. = 642.16			Proposed Conditions W.S. Elev. = 640.19			Existing Conditions W.S. Elev. = 642.57			Proposed Conditions W.S. Elev. = 640.80		
	L.O.B.	CHAN.	R.O.B.	L.O.B.	CHAN.	R.O.B.	L.O.B.	CHAN.	R.O.B.	L.O.B.	CHAN.	R.O.B.
AREA	377.84	554.52			359.96		526.66	600.62			401.38	
W.P.	258.65	112.80			68.00		422.23	114.81			68.00	
R	1.46	4.92			5.29		1.25	5.23			5.90	
S	0.001239			0.003822			0.001225			0.003469		
n	0.085	0.055	0.080	0.085	0.055	0.080	0.085	0.055	0.080	0.085	0.055	0.080
Q	299.34	1524.7			1826.0		373.41	1711.6			2086.0	
V	0.79	2.75			5.07		0.71	2.85			5.20	
	Avg. Vel. 1.96 FPS			Avg. Vel. = 5.07 FPS			Avg. Vel. = 1.85 FPS			Avg. Vel. = 5.20 FPS		

Downstream (Exit) : Station 12500

	Design Flow (50-yr / 2% AEP) Q= 1826 CFS						Check Event (100-yr / 1% AEP) Q= 2086 CFS					
	Existing Conditions W.S. Elev. = 638.16			Proposed Conditions W.S. Elev. = 638.17			Existing Conditions W.S. Elev. = 638.46			Proposed Conditions W.S. Elev. = 638.46		
	L.O.B.	CHAN.	R.O.B.	L.O.B.	CHAN.	R.O.B.	L.O.B.	CHAN.	R.O.B.	L.O.B.	CHAN.	R.O.B.
AREA	921.43	169.59	37.56	922.80	169.71	37.83	1075.55	181.70	69.86	1076.48	181.77	70.06
W.P.	496.02	42.68	99.49	496.31	42.68	99.76	543.71	42.68	119.92	543.88	42.68	120.04
R	1.86	3.97	0.38	1.86	3.98	0.38	1.98	4.26	0.58	1.98	4.26	0.58
S	0.002539			0.002535			0.002305			0.002302		
n	0.085	0.055	0.080	0.085	0.055	0.080	0.085	0.055	0.080	0.085	0.055	0.080
Q	1226.46	579.2	18.36	1228.08	579.4	18.54	1422.46	619.1	43.45	1423.30	619.1	43.61
V	1.33	3.42	0.49	1.33	3.41	0.49	1.32	3.41	0.62	1.32	3.41	0.62
	Avg. Vel. 1.62 FPS			Avg. Vel. = 1.62 FPS			Avg. Vel. = 1.57 FPS			Avg. Vel. = 1.57 FPS		

ABBREVIATIONS:

USACE U.S. ARMY CORPS OF ENGINEERS
NRCS NATURAL RESOURCE CONSERVATION SERVICE
USGS U.S. GEOLOGIC SURVEY

STATE OF TEXAS
JAIME K. BENOLIEL
96693
LICENSED
PROFESSIONAL ENGINEER

Jaime K. Benoliel 7/9/12
H & H RESOURCES, INC (TBPE F-3678)

H & H RESOURCES
CIVIL ENGINEERS
TBPE REGISTRATION NO. F-3678

Texas Department of Transportation
© 2012

IH 35W FROM NORTH TARRANT PKWY TO IH 820

HYDRAULIC DATA SHEET
STREAM BFC-2
IH 35W MAIN LANES

SHEET 3 OF 4

DESIGN	FED. RD. DIV. NO.	FEDERAL AID PROJECT NO.		HIGHWAY NO.
JKB	6	(SEE TITLE SHEET)		IH 35W
GRAPHICS CA	STATE	DISTRICT	COUNTY	SHEET NO.
CHECK JKB	TEXAS	FTW	TARRANT	1143
CHECK JT	CONTROL 0014	SECTION 16	JOB 255, ETC.	

FILENAME: S3BD*HDS*BFC2*03.dgn
DRAWING DATE: 7/13/2012

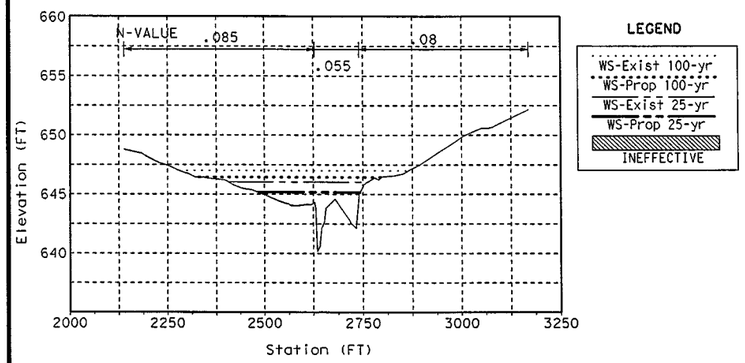

UPSTREAM APPROACH: STATION 14250

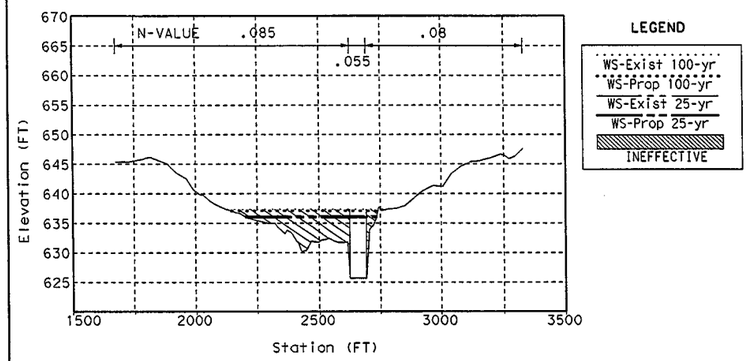

DOWNSTREAM AT CULVERT: STATION 12600

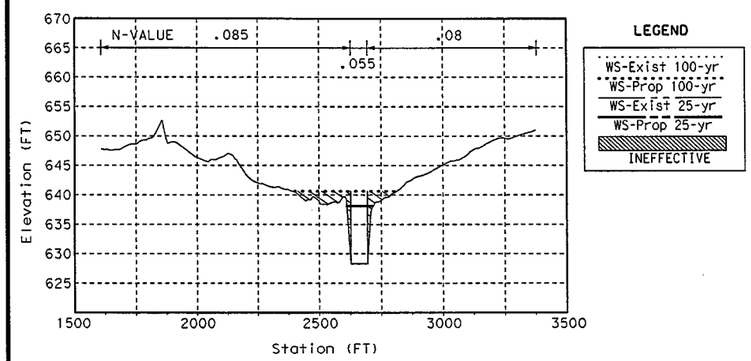

UPSTREAM AT CULVERT: STATION 12895

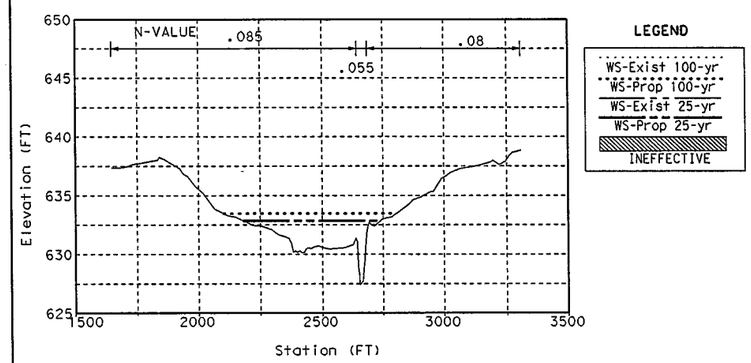

DOWNSTREAM EXIT: STATION 12500

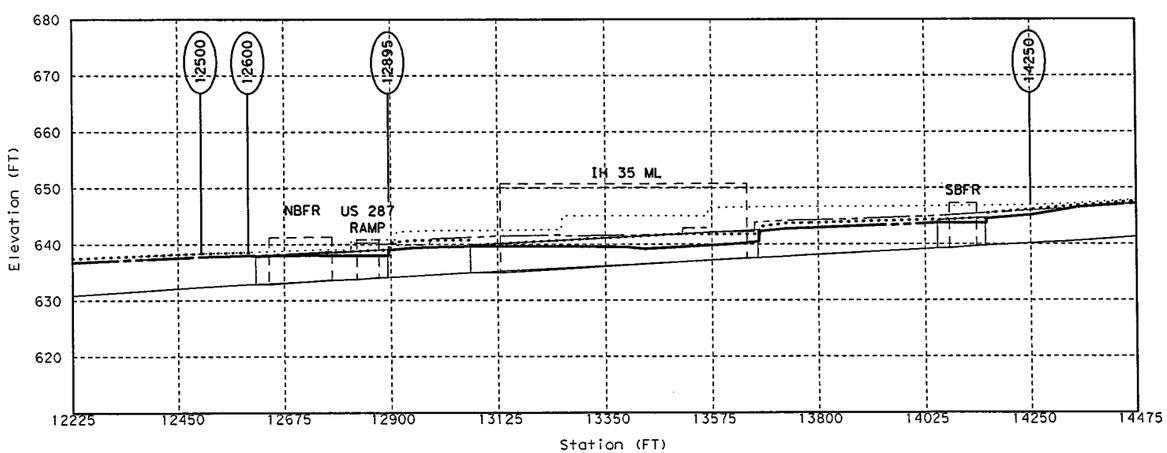

STREAM PROFILE

COMMENTS:

1. AS SHOWN ON FEMA MAP PANEL 48439C0180, DATED SEPTEMBER 25, 2009, STREAM BFC-2 AT THE PROJECT SITE IS A ZONE AE, DETAILED STUDY OF 100-YR FLOODPLAIN; A FLOODWAY IS ALSO DELINEATED IN THE FEMA FLOOD INSURANCE STUDY (FIS). ANALYSIS USING THE 100-YR FLOW RATE INDICATES NO RISE IN FLOODWAY WATER SURFACE ELEVATIONS OUTSIDE THE TXDOT ROW, DUE TO PROPOSED CONDITIONS.
2. HYDRAULIC ANALYSIS PERFORMED USING HEC-RAS VERSION 4.0. THE FEMA EFFECTIVE FIS MODEL WAS OBTAINED AND REVISED TO CREATE THE EXISTING AND PROPOSED CONDITION MODELS.
3. DOWNSTREAM BOUNDARY CONDITION IS BASED ON KNOWN WATER SURFACE ELEVATIONS FOR THE FEMA FIS AT RS 1140; STARTING WATER SURFACE ELEVATIONS FOR THE DESIGN FLOW RATES WERE INTERPOLATED FROM A RATING CURVE BASED ON THE FEMA MODELED FLOW RATES.
4. HYDROLOGIC AND HYDRAULIC MODELING PROVIDED TO THE CITY OF FORT WORTH FLOODPLAIN ADMINISTRATOR ON_____.

Upstream Approach: Station 14250

	Design Flow (25-yr / 4% AEP) Q= 1569 CFS						Check Event (100-yr / 1% AEP) Q= 2086 CFS					
	Existing Conditions W.S. Elev. = 646.04			Proposed Conditions W.S. Elev. = 645.17			Existing Conditions W.S. Elev. = 647.00			Proposed Conditions W.S. Elev. = 646.21		
	L.O.B.	CHAN.	R.O.B.	L.O.B.	CHAN.	R.O.B.	L.O.B.	CHAN.	R.O.B.	L.O.B.	CHAN.	R.O.B.
AREA	273.88	317.38	8.56	110.58	220.08	0.19	557.57	425.74	79.64	313.37	336.92	13.12
W.P.	221.44	114.82	21.87	143.53	114.82	2.73	349.43	114.82	124.56	235.43	114.82	30.40
R	1.24	2.76	0.39	0.77	1.92	0.07	1.60	3.71	0.64	1.33	2.93	0.43
S	0.004854			0.021105			0.002469			0.006731		
n	0.085	0.055	0.080	0.085	0.055	0.080	0.085	0.055	0.080	0.085	0.055	0.080
Q	384.36	1176.7	5.93	236.02	1332.9	0.08	661.32	1369.1	54.55	543.87	1530.7	11.42
V	1.40	3.71	0.69	2.13	6.06	0.45	1.19	3.22	0.68	1.74	4.54	0.87
	Avg. Vel. 2.61 FPS			Avg. Vel. = 4.74 FPS			Avg. Vel. = 1.96 FPS			Avg. Vel. = 3.14 FPS		

Upstream at Bridge: Ex Station 12765 / Pr Station 12895

	Design Flow (25-yr / 4% AEP) Q= 1569 CFS						Check Event (100-yr / 1% AEP) Q= 2086 CFS					
	Existing Conditions W.S. Elev. = 638.73			Proposed Conditions W.S. Elev. = 639.05			Existing Conditions W.S. Elev. = 639.20			Proposed Conditions W.S. Elev. = 640.31		
	L.O.B.	CHAN.	R.O.B.	L.O.B.	CHAN.	R.O.B.	L.O.B.	CHAN.	R.O.B.	L.O.B.	CHAN.	R.O.B.
AREA	727.83	104.39	74.73		334.17		950.66	117.59	110.87		419.34	
W.P.	455.73	29.58	69.64		68.00		507.63	29.58	83.80		68.00	
R	1.60	3.53	1.07		4.91		1.87	3.98	1.32		6.17	
S	0.003813			0.003615			0.003410			0.002998		
n	0.085	0.055	0.080	0.085	0.055	0.080	0.085	0.055	0.080	0.085	0.055	0.080
Q	1073.45	403.7	89.85		1569.0		1474.48	465.6	144.92		2086.0	
V	1.47	3.87	1.20		4.70		1.55	3.96	1.31		4.97	
	Avg. Vel. 1.73 FPS			Avg. Vel. = 4.70 FPS			Avg. Vel. = 1.77 FPS			Avg. Vel. = 4.97 FPS		
				US Face of Bridge W.S. Elev. = 638.04						US Face of Bridge W.S. Elev. = 639.13		
				Avg. Vel. 7.16 FPS						Avg. Vel. 7.45 FPS		

Downstream at Culvert: Station 12600

	Design Flow (25-yr / 4% AEP) Q= 1569 CFS						Check Event (100-yr / 1% AEP) Q= 2086 CFS					
	Existing Conditions W.S. Elev. = 638.13			Proposed Conditions W.S. Elev. = 638.02			Existing Conditions W.S. Elev. = 638.68			Proposed Conditions W.S. Elev. = 638.56		
	L.O.B.	CHAN.	R.O.B.	L.O.B.	CHAN.	R.O.B.	L.O.B.	CHAN.	R.O.B.	L.O.B.	CHAN.	R.O.B.
AREA	703.34	129.76	75.53		353.09		972.20	147.16	111.81		389.38	
W.P.	450.74	32.37	58.97		68.00		520.60	32.37	93.12		68.00	
R	1.56	4.01	1.28		5.19		1.87	4.55	1.20		5.73	
S	0.003358			0.003009			0.002775			0.003838		
n	0.085	0.055	0.080	0.085	0.055	0.080	0.085	0.055	0.080	0.085	0.055	0.080
Q	958.50	512.6	95.87		1569.0		1357.70	574.7	152.58		2086.0	
V	1.36	3.95	1.27		4.44		1.40	3.91	1.36		5.36	
	Avg. Vel. 1.72 FPS			Avg. Vel. = 4.44 FPS			Avg. Vel. = 1.69 FPS			Avg. Vel. = 5.36 FPS		

Downstream (Exit) : Station 12500

	Design Flow (25-yr / 4% AEP) Q= 1569 CFS						Check Event (100-yr / 1% AEP) Q= 2086 CFS					
	Existing Conditions W.S. Elev. = 637.84			Proposed Conditions W.S. Elev. = 637.85			Existing Conditions W.S. Elev. = 638.46			Proposed Conditions W.S. Elev. = 638.46		
	L.O.B.	CHAN.	R.O.B.	L.O.B.	CHAN.	R.O.B.	L.O.B.	CHAN.	R.O.B.	L.O.B.	CHAN.	R.O.B.
AREA	767.31	156.35	15.13	769.15	156.51	15.34	1075.55	181.70	69.86	1076.48	181.77	70.06
W.P.	463.57	42.68	53.51	464.33	42.68	53.73	543.71	42.68	119.92	543.88	42.68	120.04
R	1.66	3.66	0.28	1.66	3.67	0.29	1.98	4.26	0.58	1.98	4.26	0.58
S	0.002934			0.002927			0.002305			0.002302		
n	0.085	0.055	0.080	0.085	0.055	0.080	0.085	0.055	0.080	0.085	0.055	0.080
Q	1016.69	543.8	6.56	1018.33	544.0	6.69	1422.46	619.1	43.45	1423.30	619.1	43.61
V	1.33	3.48	0.43	1.32	3.48	0.44	1.32	3.41	0.62	1.32	3.41	0.62
	Avg. Vel. 1.67 FPS			Avg. Vel. = 1.67 FPS			Avg. Vel. = 1.57 FPS			Avg. Vel. = 1.57 FPS		

ABBREVIATIONS:

USACE U.S. ARMY CORPS OF ENGINEERS
NRCS NATURAL RESOURCE CONSERVATION SERVICE
USGS U.S. GEOLOGIC SURVEY

STATE OF TEXAS
JAIME K. BENOLIEL
96693
LICENSED
PROFESSIONAL ENGINEER

7/9/12
H & H RESOURCES, INC (TBPE F-3678)

H & H RESOURCES
CIVIL ENGINEERS
TBPE REGISTRATION NO. F-3678

Texas Department of Transportation
© 2012

IH 35W FROM NORTH TARRANT PKWY TO IH 820

HYDRAULIC DATA SHEET
STREAM BFC-2
IH 35W DC 35N-287W

SHEET 4 OF 4

DESIGN	FED. RD. DIV. NO.	FEDERAL AID PROJECT NO.		HIGHWAY NO.
JKB	6	(SEE TITLE SHEET)		IH 35W
GRAPHICS CA	STATE	DISTRICT	COUNTY	SHEET NO.
CHECK JKB	TEXAS	FTW	TARRANT	1144
CHECK JT	CONTROL 0014	SECTION 16	JOB 255, ETC.	

FILENAME: S3BD*HDS*BFC2*04.dgn
DRAWING DATE: 7/13/2012

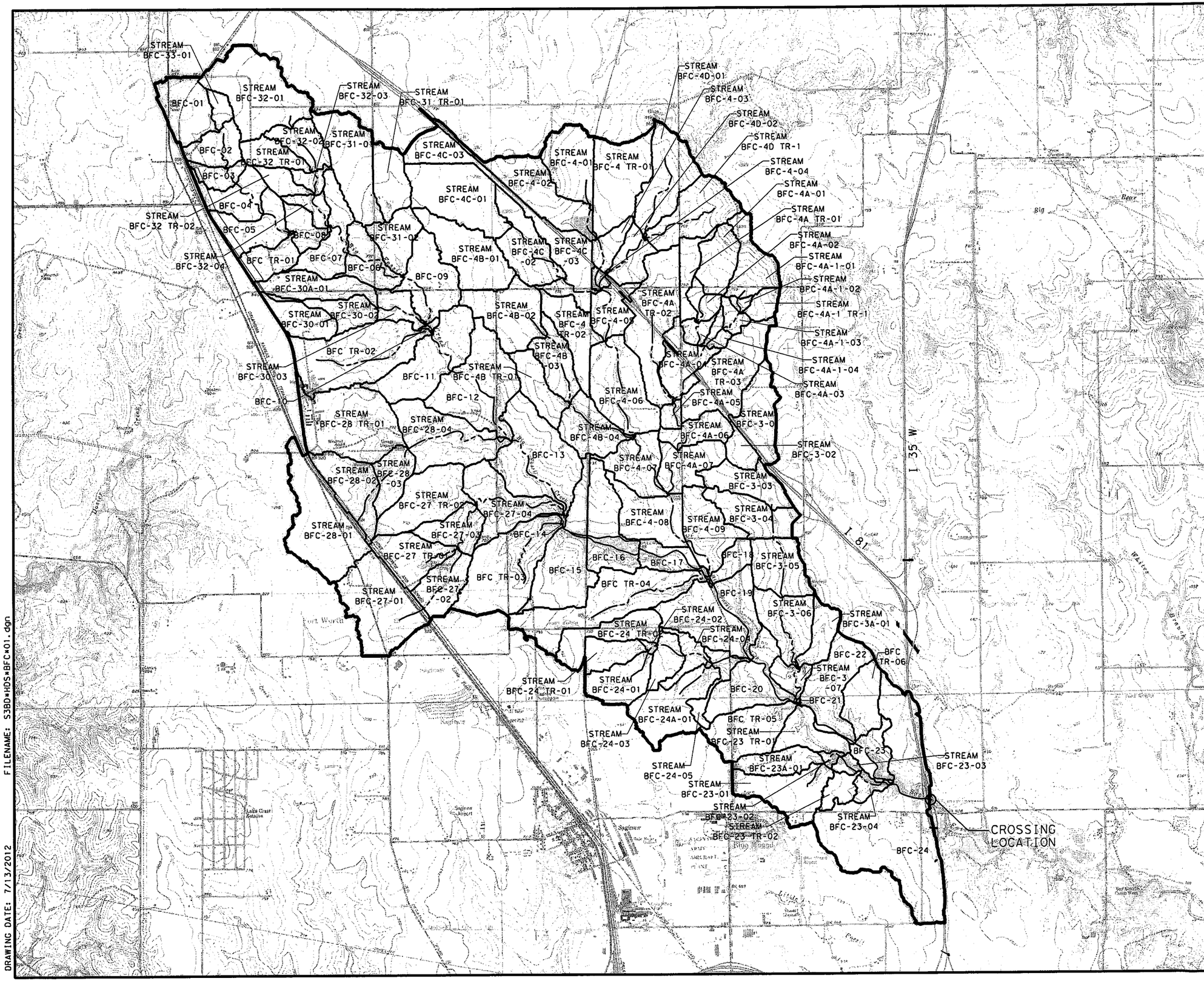

0 2000' 4000'

SCALE IN FEET

LEGEND

OVERALL WATERSHED BOUNDARY

SUBAREA DRAINAGE BOUNDARY

BFC-2-01 SUBAREA

STATE OF TEXAS
JOHN A. TERRY
51729
REGISTERED PROFESSIONAL ENGINEER

7-5-12

H & H RESOURCES, INC (TBPE F-3678)

H & H RESOURCES
CIVIL ENGINEERS
TBPE REGISTRATION NO. F-3678

Texas Department of Transportation
© 2012

IH 35W FROM NORTH TARRANT PKWY TO IH 820

HYDRAULIC DATA SHEET
BIG FOSSIL CREEK
DRAINAGE AREA MAP

SHEET 1 OF 8

DESIGN	FED. RD. DIV. NO.	FEDERAL AID PROJECT NO.		HIGHWAY NO.
JKB	6	(SEE TITLE SHEET)		IH 35W
GRAPHICS	STATE	DISTRICT	COUNTY	SHEET NO.
CA	TEXAS	FTW	TARRANT	1145
CHECK JKB	CONTROL	SECTION	JOB	
CHECK JT	0014	16	255, ETC.	

FILENAME: S38D*HDS*BFC*01.dgn

DRAWING DATE: 7/13/2012

HYDROLOGIC COMPUTATIONS

NAME	Area (sq.mi)	Lag (hrs)	% Imp.	Peaking Coefficient	10-YR Loss rate (in/hr)		50-YR Loss rate (in/hr)		100-YR Loss rate (in/hr)	
					Initial	Constant	Initial	Constant	Initial	Constant
BFC-08	0.149	0.393	5	0.719	1.234	0.152	0.918	0.109	0.795	0.079
Stream BFC-4-04	0.021	0.072	8	0.719	1.120	0.140	0.840	0.100	0.750	0.070
Stream BFC-4C-03	0.356	0.496	18	0.719	1.180	0.146	0.881	0.105	0.774	0.075
BFC-09	0.232	0.262	34	0.719	1.249	0.154	0.928	0.110	0.801	0.080
BFC-10	0.009	0.076	4	0.719	1.120	0.140	0.840	0.100	0.750	0.070
BFC Tr-02	0.437	0.633	20	0.719	1.340	0.163	0.990	0.117	0.837	0.087
BFC-12	0.398	0.495	10	0.719	1.262	0.155	0.937	0.111	0.806	0.081
Stream BFC-28-04	0.326	0.688	4	0.719	1.292	0.158	0.958	0.114	0.818	0.084
Stream BFC-4-07	0.185	0.339	4	0.719	1.289	0.158	0.956	0.113	0.817	0.083
Stream BFC-28 Tr-01	0.421	0.604	14	0.719	1.366	0.166	1.009	0.119	0.847	0.089
Stream BFC-28-03	0.123	0.359	3	0.719	1.325	0.162	0.980	0.116	0.831	0.086
BFC-13	0.416	0.600	10	0.719	1.274	0.156	0.945	0.112	0.811	0.082
Stream BFC-4-09	0.212	0.372	30	0.719	1.398	0.169	1.030	0.122	0.860	0.092
BFC-14	0.007	0.133	3	0.719	1.388	0.168	1.023	0.121	0.856	0.091
BFC Tr-03	0.412	0.567	10	0.719	1.274	0.156	0.945	0.112	0.811	0.082
BFC-17	0.102	0.560	6	0.719	1.379	0.167	1.017	0.120	0.852	0.090
BFC-18	0.069	0.166	36	0.719	1.273	0.156	0.945	0.112	0.810	0.082
BFC Tr-04	0.436	0.760	5	0.719	1.264	0.155	0.939	0.111	0.807	0.081
BFC-19	0.396	0.379	35	0.719	1.342	0.163	0.992	0.118	0.838	0.088
BFC-20	0.251	0.464	10	0.719	1.333	0.162	0.985	0.117	0.834	0.087
Stream BFC-4 Tr-01	0.303	0.386	15	0.719	1.146	0.143	0.858	0.102	0.760	0.072
Stream BFC-4-03	0.074	0.224	5	0.719	1.120	0.140	0.840	0.100	0.750	0.070
Stream BFC-4-02	0.281	0.545	16	0.719	1.147	0.143	0.859	0.102	0.761	0.072
Stream BFC-4-01	0.214	0.314	21	0.719	1.142	0.142	0.855	0.102	0.759	0.072
Stream BFC-4C-02	0.225	0.374	21	0.719	1.215	0.150	0.905	0.107	0.787	0.077
Stream BFC-4C-01	0.342	0.400	10	0.719	1.140	0.142	0.854	0.102	0.758	0.072
Stream BFC-4D Tr-1	0.251	0.330	20	0.719	1.189	0.147	0.887	0.105	0.777	0.075
Stream BFC-4D-02	0.112	0.239	5	0.719	1.161	0.144	0.868	0.103	0.766	0.073
Stream BFC-4D-01	0.259	0.371	16	0.719	1.161	0.144	0.868	0.103	0.766	0.073
Stream BFC-4 Tr-02	0.178	0.318	6	0.719	1.319	0.161	0.976	0.116	0.828	0.086
Stream BFC-4-06	0.319	0.565	2	0.719	1.277	0.157	0.948	0.112	0.812	0.082
Stream BFC-4-05	0.132	0.320	4	0.719	1.175	0.146	0.878	0.104	0.772	0.074
Stream BFC-4B Tr-01	0.136	0.333	7	0.719	1.260	0.155	0.936	0.111	0.805	0.081
Stream BFC-4B-04	0.185	0.405	8	0.719	1.279	0.157	0.949	0.113	0.813	0.083
Stream BFC-4B-03	0.151	0.376	7	0.719	1.260	0.155	0.936	0.111	0.805	0.081
Stream BFC-4B-02	0.262	0.293	23	0.719	1.209	0.149	0.901	0.107	0.785	0.077
Stream BFC-4B-01	0.277	0.299	37	0.719	1.187	0.147	0.886	0.105	0.777	0.075
Stream BFC-4A Tr-03	0.323	0.448	8	0.719	1.146	0.143	0.858	0.102	0.760	0.072
Stream BFC-4A-07	0.170	0.422	14	0.719	1.281	0.157	0.950	0.113	0.814	0.083
Stream BFC-4A Tr-02	0.362	0.485	23	0.719	1.166	0.145	0.872	0.104	0.768	0.074
Stream BFC-4A-05	0.036	0.162	6	0.719	1.298	0.159	0.962	0.114	0.820	0.084
Stream BFC-4A-04	0.162	0.256	13	0.719	1.142	0.142	0.855	0.102	0.759	0.072
Stream BFC-4A-01	0.148	0.205	16	0.719	1.177	0.146	0.879	0.105	0.773	0.075
Stream BFC-4A Tr-01	0.095	0.354	18	0.719	1.201	0.148	0.895	0.106	0.782	0.076
Stream BFC-4A-03	0.044	0.151	5	0.719	1.204	0.149	0.898	0.107	0.783	0.077
Stream BFC-4A-02	0.059	0.181	6	0.719	1.178	0.146	0.880	0.105	0.773	0.075
Stream BFC-4A-1-01	0.170	0.259	21	0.719	1.226	0.151	0.913	0.108	0.792	0.078
Stream BFC-4A-1 Tr-1	0.056	0.156	5	0.719	1.133	0.141	0.849	0.101	0.755	0.071
Stream BFC-4A-1-04	0.041	0.173	7	0.719	1.180	0.146	0.881	0.105	0.774	0.075
Stream BFC-4A-1-02	0.016	0.091	5	0.719	1.196	0.148	0.892	0.106	0.780	0.076
Stream BFC-4A-1-03	0.043	0.135	3	0.719	1.201	0.149	0.896	0.106	0.782	0.076
Stream BFC-4A-06	0.114	0.235	19	0.719	1.222	0.151	0.910	0.108	0.790	0.078
Stream BFC-27 Tr-02	0.266	0.431	13	0.719	1.353	0.165	0.999	0.118	0.842	0.088
Stream BFC-27 Tr-01	0.184	0.439	7	0.719	1.308	0.160	0.968	0.115	0.824	0.085
Stream BFC-27-04	0.249	0.569	15	0.719	1.328	0.162	0.983	0.116	0.832	0.086
Stream BFC-27-03	0.137	0.302	16	0.719	1.292	0.158	0.958	0.114	0.818	0.084
Stream BFC-27-02	0.155	0.388	11	0.719	1.278	0.157	0.948	0.112	0.812	0.082
Stream BFC-27-01	0.381	0.324	13	0.719	1.132	0.141	0.848	0.101	0.755	0.071
Stream BFC-28-01	0.425	0.275	27	0.719	1.222	0.151	0.910	0.108	0.790	0.078
Stream BFC-28-02	0.212	0.421	7	0.719	1.282	0.157	0.951	0.113	0.814	0.083
BFC-11	0.318	0.214	14	0.719	1.269	0.156	0.942	0.112	0.809	0.082
Stream BFC-30A-01	0.175	0.590	5	0.719	1.334	0.163	0.987	0.117	0.835	0.087
Stream BFC-30-03	0.082	0.244	20	0.719	1.213	0.150	0.903	0.107	0.787	0.077
Stream BFC-30-02	0.111	0.408	3	0.719	1.297	0.159	0.961	0.114	0.820	0.084
Stream BFC-30-01	0.132	0.352	3	0.719	1.271	0.156	0.943	0.112	0.810	0.082
Stream BFC-31 Tr-01	0.147	0.318	5	0.719	1.156	0.144	0.864	0.103	0.764	0.073
Stream BFC-31-02	0.142	0.329	15	0.719	1.213	0.150	0.904	0.107	0.787	0.077
Stream BFC-31-01	0.295	0.542	2	0.719	1.207	0.149	0.900	0.107	0.784	0.077
BFC-07	0.188	0.260	20	0.719	1.283	0.157	0.952	0.113	0.815	0.083
Stream BFC-32 Tr-01	0.102	0.391	4	0.719	1.287	0.158	0.954	0.113	0.816	0.083
Stream BFC-32 Tr-02	0.063	0.267	13	0.719	1.281	0.157	0.950	0.113	0.814	0.083
Stream BFC-32-04	0.058	0.190	21	0.719	1.204	0.149	0.897	0.107	0.783	0.077
Stream BFC-32-03	0.042	0.173	3	0.719	1.176	0.146	0.878	0.104	0.772	0.074
Stream BFC-32-02	0.120	0.314	1	0.719	1.216	0.150	0.906	0.108	0.788	0.078
Stream BFC-32-01	0.400	0.410	13	0.719	1.206	0.149	0.899	0.107	0.784	0.077
BFC Tr-01	0.111	0.267	26	0.719	1.296	0.159	0.960	0.114	0.819	0.084
BFC-06	0.088	0.224	31	0.719	1.266	0.155	0.940	0.111	0.807	0.081
BFC-05	0.179	0.389	23	0.719	1.280	0.157	0.950	0.113	0.813	0.083
BFC-04	0.150	0.428	23	0.719	1.322	0.161	0.978	0.116	0.830	0.086
BFC-03	0.068	0.206	30	0.719	1.276	0.156	0.947	0.112	0.811	0.082
BFC-02	0.123	0.220	12	0.719	1.302	0.159	0.964	0.114	0.822	0.084
BFC-01	0.195	0.383	20	0.719	1.231	0.152	0.916	0.109	0.794	0.079
Stream BFC-33-01	0.044	0.202	20	0.719	1.247	0.153	0.927	0.110	0.800	0.080
BFC-16	0.254	0.411	15	0.719	1.309	0.160	0.969	0.115	0.825	0.085
BFC-15	0.343	0.443	4	0.719	1.280	0.157	0.949	0.113	0.813	0.083
Stream BFC-4-08	0.221	0.471	6	0.719	1.291	0.158	0.957	0.113	0.817	0.083

NAME	Area (sq.mi)	Lag (hrs)	% Imp.	Peaking Coefficient	10-YR Loss rate (in/hr)		50-YR Loss rate (in/hr)		100-YR Loss rate (in/hr)	
					Initial	Constant	Initial	Constant	Initial	Constant
Stream BFC-24A-01	0.255	0.244	40	0.719	1.196	0.148	0.892	0.106	0.780	0.076
Stream BFC-24-05	0.077	0.276	26	0.719	1.201	0.148	0.895	0.106	0.782	0.076
Stream BFC-24-04	0.073	0.148	39	0.719	1.318	0.161	0.975	0.116	0.828	0.086
Stream BFC-24-01	0.159	0.355	4	0.719	1.217	0.150	0.906	0.108	0.788	0.078
Stream BFC-24 Tr-01	0.102	0.286	9	0.719	1.254	0.154	0.932	0.111	0.803	0.081
Stream BFC-24 Tr-02	0.182	0.405	7	0.719	1.232	0.152	0.917	0.109	0.794	0.079
Stream BFC-24-02	0.009	0.100	6	0.719	1.221	0.151	0.909	0.108	0.790	0.078
Stream BFC-24-03	0.091	0.195	36	0.719	1.362	0.165	1.005	0.119	0.845	0.089
Stream BFC-3A-01	0.102	0.294	3	0.719	1.188	0.147	0.886	0.105	0.777	0.075
Stream BFC-3-07	0.068	0.489	3	0.719	1.366	0.166	1.008	0.119	0.847	0.089
Stream BFC-3-06	0.206	0.498	6	0.719	1.260	0.155	0.936	0.111	0.805	0.081
Stream BFC-3-05	0.194	0.280	36	0.719	1.224	0.151	0.911	0.108	0.791	0.078
Stream BFC-3-04	0.184	0.285	8	0.719	1.186	0.147	0.885	0.105	0.776	0.075
Stream BFC-3-03	0.160	0.312	7	0.719	1.152	0.143	0.862	0.102	0.762	0.072
Stream BFC-3-02	0.063	0.199	5	0.719	1.179	0.146	0.880	0.105	0.773	0.075
Stream BFC-3-01	0.193	0.370	8	0.719	1.212	0.150	0.903	0.107	0.786	0.077
Stream BFC-23A-01	0.120	0.352	6	0.719	1.218	0.150	0.907	0.108	0.789	0.078
Stream BFC-23-01	0.235	0.300	27	0.719	1.177	0.146	0.879	0.105	0.773	0.075
Stream BFC-23 Tr-01	0.132	0.449	6	0.719	1.371	0.166	1.012	0.120	0.849	0.090
Stream BFC-23 Tr-02	0.066	0.160	60	0.719	1.260	0.155	0.936	0.111	0.805	0.081
Stream BFC-23-04	0.042	0.311	5	0.719	1.421	0.172	1.046	0.124	0.869	0.094
Stream BFC-23-03	0.028	0.188	6	0.719	1.412	0.171	1.040	0.123	0.865	0.093
Stream BFC-23-02	0.017	0.148	6	0.719	1.278	0.157	0.948	0.112	0.812	0.082
BFC Tr-05	0.232	0.397	7	0.719	1.227	0.151	0.913	0.108	0.792	0.078
BFC-21	0.001	0.045	3	0.719	1.372	0.167	1.012	0.120	0.849	0.090
BFC Tr-06	0.153	0.372	4	0.719	1.354	0.165	1.000	0.118	0.842	0.088
BFC-23	0.109	0.340	3	0.719	1.293	0.158	0.958	0.114	0.818	0.084
BFC-22	0.262	0.597	3	0.719	1.299	0.159	0.963	0.114	0.821	0.084
BFC-24	0.971	0.237	17	0.719	1.244	0.153	0.925	0.110	0.799	0.080

HYDROLOGIC METHOD: SNYDER'S UNIT HYDROGRAPH, FREQUENCY STORM (HEC-HMS 3.5)

DRAINAGE AREA: 21.1 MI^2

DESIGN FREQUENCY: 10 YR FRONTAGE ROADS, 50 YR RAMPS, 50 YR MAIN LANES.

SUMMARY OF SOIL CONDITIONS AND LAND USE: SOIL DATA OBTAINED FROM THE NRCS THROUGH ITS WEB SOIL DATA UTILITY (hhtp://soildatamart.nrcs.usda.gov/). THE BIG FOSSIL CREEK WATERSHED, UPSTREAM FROM IH 35 W, CONSISTS MAINLY OF GENTLE ROLLING PRAIRIE. THE MAJORITY OF SURFACE SOILS IN THE WATERSHED ARE CLAYS AND CLAY LOAMS, WITH THE SANGER CLAY SOILS COMPRISING APPROXIMATELY 34.5% OF THE WATERSHED. OTHER MAJOR SOIL GROUPS INCLUDE THE SLIDELL CLAY SOILS (17%), ALEDO GRAVELLY CLAY LOAM SOILS (15.3%), AND PURVES CLAY SOILS (15%). THE NRCS CHARACTERIZES APPROXIMATELY 76.6% OF THE SOILS IN THE WATERSHED AS HYDROLOGIC GROUP D, 19.3% OF THE SOILS AS HYDROLOGIC GROUP C, AND 3.8% OF THE SOILS AS GROUP B, WITH 0.3% CHARACTERIZED AS WATER.

CURRENT LAND USE WITHIN THE BIG FOSSIL CREEK WATERSHED CONSISTS PRIMARILY OF LARGE OPEN TRACTS OF PASTURE OR RANGELAND, WITH AREAS OF MEDIUM-DENSITY RESIDENTIAL DEVELOPMENT AND SMALL POCKETS OF COMMERCIAL/RETAIL AND INDUSTRIAL USES. THERE ARE NO SUBSTANTIAL FLOOD CONTROL OR DETENTION FACILITIES WITHIN THE WATERSHED, AND SURFACE WATER COMPRISES APPROXIMATELY 0.3% OF THE STUDY WATERSHED. THE MAJOR LAND USES BASED ON THE 2005 NCTCOG LAND USE COVERAGE ARE VACANT (61.4%), SINGLE FAMILY RESIDENTIAL (17.8%), AND TRANSPORTATION (8.9%).

ABBREVIATIONS:

USACE U.S. ARMY CORPS OF ENGINEERS
NRCS NATURAL RESOURCE CONSERVATION SERVICE
USGS U.S. GEOLOGIC SURVEY

STATE OF TEXAS
JOHN A. TERRY
51729
REGISTERED PROFESSIONAL ENGINEER

7-5-12

H & H RESOURCES, INC (TBPE F-3678)

H & H RESOURCES
CIVIL ENGINEERS
TBPE REGISTRATION NO. F-3678

Texas Department of Transportation
© 2012

IH 35W FROM NORTH TARRANT PKWY TO IH 820

HYDRAULIC DATA SHEET
BIG FOSSIL CREEK
HYDROLOGIC DATA

SHEET 2 OF 8

DESIGN	FED. RD. DIV. NO.	FEDERAL AID PROJECT NO.		HIGHWAY NO.
JKB	6	(SEE TITLE SHEET)		IH 35W
GRAPHICS CA	STATE	DISTRICT	COUNTY	SHEET NO.
CHECK JKB	TEXAS	FTW	TARRANT	1146
CHECK JT	CONTROL 0014	SECTION 16	JOB 255, ETC.	

FILENAME: S3BD*HDS*BFC*02.dgn

DRAWING DATE: 7/13/2012

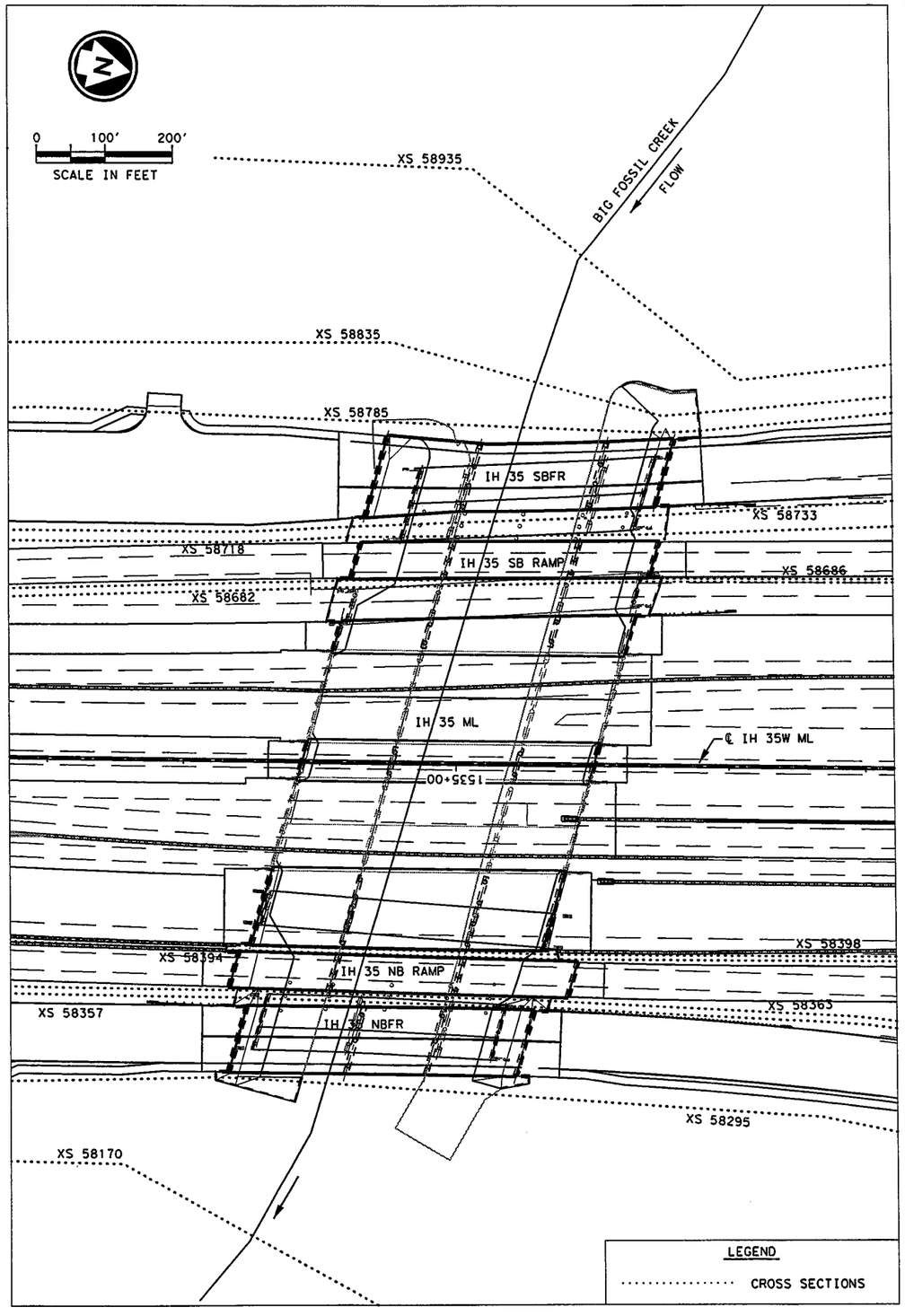

HEC-RAS CROSS SECTION LOCATIONS

1" = 100'

PRECIPITATION INFORMATION [1]

FREQUENCY (YR)	24 HR RAINFALL DEPTH (IN)
10	3.35
25	4.75
50	5.75
100	7.10
500	8.30

SUMMARY OF DISCHARGES

	TxDOT					FEMA
INTERVAL	10 YR	25 YR	50 YR	100 YR	500 YR	100 YR
FLOW (CFS)	10846	15335	18155	21003	26131	19950

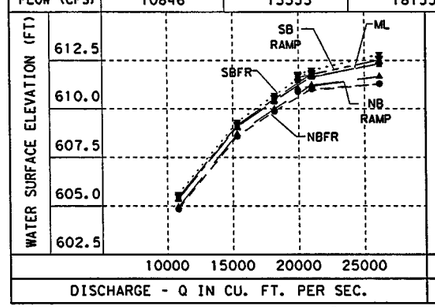

CONVEYANCE CURVE[3]

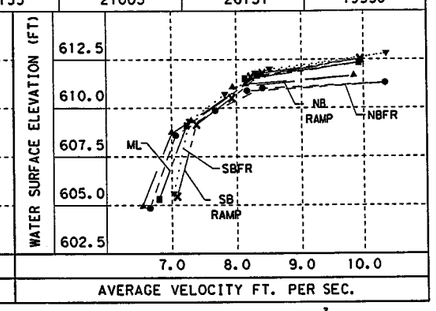

VELOCITY CURVE[3]

ABBREVIATIONS:

USACE U.S. ARMY CORPS OF ENGINEERS
NRCS NATURAL RESOURCE CONSERVATION SERVICE
USGS U.S. GEOLOGIC SURVEY

NOTES:

1. HYDROLOGIC ANALYSIS PERFORMED USING SNYDER'S UNIT HYDROGRAPH METHOD, MODELED IN HEC-HMS VERSION 3.5. INITIAL AND CONSTANT LOSSES WERE ESTIMATED USING USACE PROCEDURES. LAG TIME WAS ESTIMATED USING USACE URBANIZATION CURVES AS PRESENTED IN THE NORTH CENTRAL TEXAS COUNCIL OF GOVERNMENTS (NCTCOG) INTERGRATED STORM WATER MANAGEMENT (ISWM) TECHNICAL MANUAL.
2. PRECIPITATION INFORMATION FOR TARRANT COUNTY WAS OBTAINED FROM THE 2004 "ATLAS OF DEPTH-DURATION-FREQUENCY OF PRECIPITATION ANNUAL MAXIMA FOR TEXAS", EXCEPT THAT 2-YR RAINFALL DATA WAS OBTAINED FROM THE NATIONAL WEATHER SERVICE TP-40. DIFFERENCES BETWEEN TP-40 AND THE 2004 ATLAS ARE MINIMAL AT THE 2-YR EVENT.
3. THE VALUES FOR THE CONVEYANCE AND VELOCITY CURVES ARE FROM THE UPSTREAM FACE OF BRIDGE.

STATE OF TEXAS
JAIME K. BENOLIEL
96693
LICENSED
PROFESSIONAL ENGINEER

7/9/12
H & H RESOURCES, INC (TBPE F-3678)

H & H RESOURCES
CIVIL ENGINEERS
TBPE REGISTRATION NO. F-3678

Texas Department of Transportation
© 2012

IH 35W FROM NORTH TARRANT PKWY TO IH 820

HYDRAULIC DATA SHEET
BIG FOSSIL CREEK

SHEET 3 OF 8

DESIGN	FED. RD. DIV. NO.	FEDERAL AID PROJECT NO.		HIGHWAY NO.
JKB	6	(SEE TITLE SHEET)		IH 35W
GRAPHICS CA	STATE	DISTRICT	COUNTY	SHEET NO.
CHECK JKB	TEXAS	FTW	TARRANT	1147
CHECK JT	CONTROL 0014	SECTION 16	JOB 255, ETC.	

FILENAME: S3BD*HDS*BFC*03.dgn
DRAWING DATE: 7/13/2012

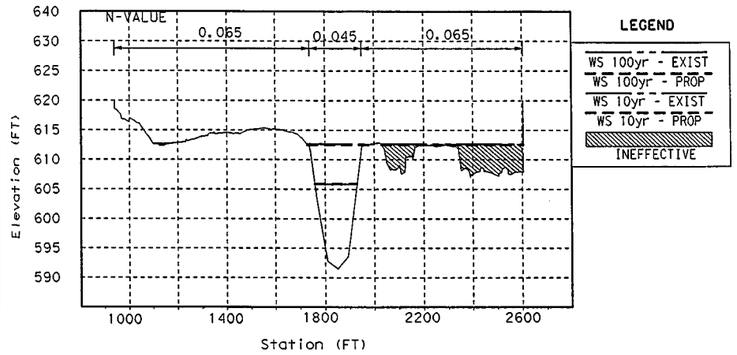

UPSTREAM APPROACH: SECTION 58835

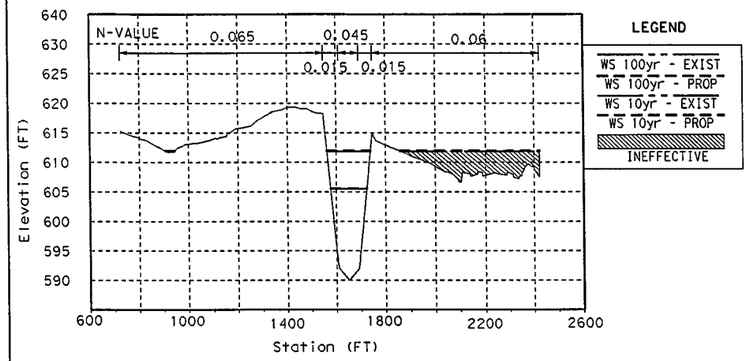

DOWNSTREAM AT BRIDGE: SECTION 58733

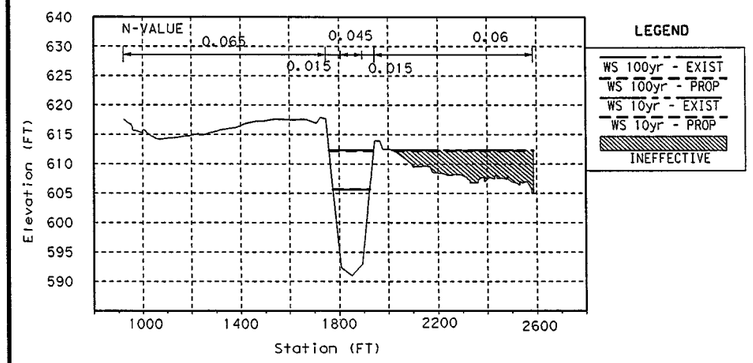

UPSTREAM AT BRIDGE: SECTION 58785

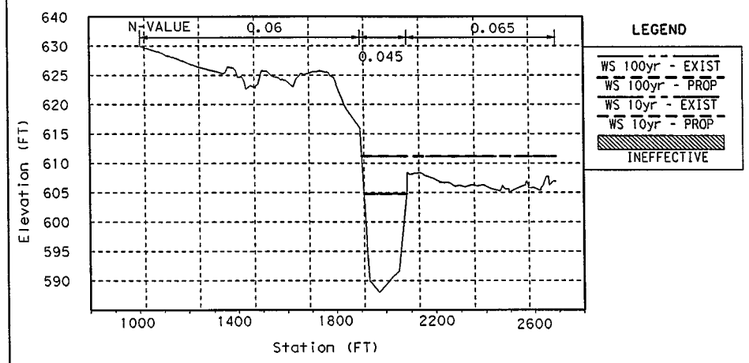

DOWNSTREAM EXIT: SECTION 58170

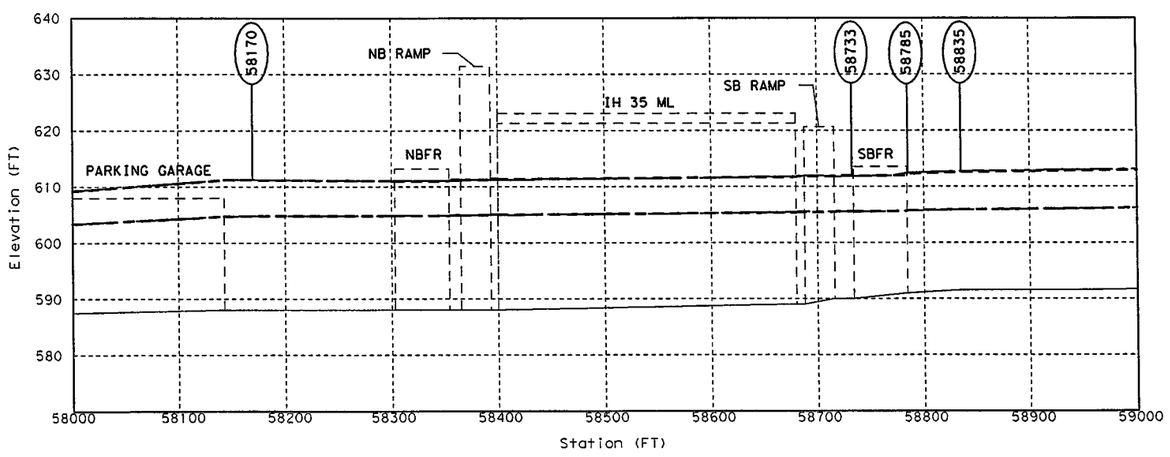

STREAM PROFILE

Upstream Approach: Station 58835

	Design Flow (10-yr / 10% AEP) Q=10846 CFS						Check Event (100-yr / 1% AEP) Q=21003 CFS					
	Existing Conditions W.S. Elev. = 605.84			Proposed Conditions W.S. Elev. = 605.88			Existing Conditions W.S. Elev. = 612.68			Proposed Conditions W.S. Elev. = 612.55		
	L.O.B.	CHAN.	R.O.B.	L.O.B.	CHAN.	R.O.B.	L.O.B.	CHAN.	R.O.B.	L.O.B.	CHAN.	R.O.B.
AREA		1699.42			1706.04		10.09	3015.98	9.69	3.03	2988.43	4.30
W.P.		174.97			175.22		75.64	217.71	47.27	35.55	217.71	33.39
R		9.71			9.74		0.13	13.85	0.20	0.09	13.73	0.13
S		0.001802			0.001783			0.001336			0.001378	
n	0.065	0.045	0.060	0.065	0.045	0.060	0.065	0.045	0.060	0.065	0.045	0.060
Q		10843.0			10846.0		2.45	20995.5	3.05	0.63	21001.4	1.01
V		6.38			6.36		0.24	6.96	0.31	0.21	7.03	0.23
	Avg. Vel.	6.38	FPS	Avg. Vel. =	6.36	FPS	Avg. Vel. =	6.92	FPS	Avg. Vel. =	7.01	FPS

Upstream at Bridge: Station 58785

	Design Flow (10-yr / 10% AEP) Q=10846 CFS						Check Event (100-yr / 1% AEP) Q=21003 CFS					
	Existing Conditions W.S. Elev. = 605.68			Proposed Conditions W.S. Elev. = 605.72			Existing Conditions W.S. Elev. = 612.39			Proposed Conditions W.S. Elev. = 612.28		
	L.O.B.	CHAN.	R.O.B.	L.O.B.	CHAN.	R.O.B.	L.O.B.	CHAN.	R.O.B.	L.O.B.	CHAN.	R.O.B.
AREA		1612.00			1617.92			2701.98			2707.28	
W.P.		154.70			154.90			177.59			189.84	
R		10.42			10.44			15.21			14.26	
S		0.001025			0.001014			0.000728			0.000745	
n	0.065	0.034	0.060	0.065	0.034	0.060	0.065	0.032	0.060	0.065	0.031	0.060
Q		10843.0			10846.0			21001.0			21003.0	
V		6.73			6.70			7.77			7.76	
	Avg. Vel.	6.73	FPS	Avg. Vel. =	6.70	FPS	Avg. Vel. =	7.77	FPS	Avg. Vel. =	7.76	FPS
				US Face of Bridge W.S. Elev. = 605.62						US Face of Bridge W.S. Elev. = 612.03		
				Avg. Vel.	7.07	FPS				Avg. Vel.	8.53	FPS

Downstream at Bridge: Ex Station 58705 / Pr Station 58733

	Design Flow (10-yr / 10% AEP) Q=10846 CFS						Check Event (100-yr / 1% AEP) Q= 21003 CFS					
	Existing Conditions W.S. Elev. = 605.49			Proposed Conditions W.S. Elev. = 605.57			Existing Conditions W.S. Elev. = 611.87			Proposed Conditions W.S. Elev. = 611.96		
	L.O.B.	CHAN.	R.O.B.	L.O.B.	CHAN.	R.O.B.	L.O.B.	CHAN.	R.O.B.	L.O.B.	CHAN.	R.O.B.
AREA		1603.98			1615.33			2607.91			2634.67	
W.P.		149.70			150.10			175.91			184.05	
R		10.71			10.76			14.83			14.31	
S		0.000947			0.000927			0.000754			0.000744	
n	0.065	0.033	0.060	0.065	0.033	0.060	0.065	0.031	0.060	0.065	0.030	0.060
Q		10843.0			10846.0			21001.0			21003.0	
V		6.76			6.71			8.05			7.97	
	Avg. Vel.	6.76	FPS	Avg. Vel. =	6.71	FPS	Avg. Vel. =	8.05	FPS	Avg. Vel. =	7.97	FPS

Downstream (Exit) : Station 58170

	Design Flow (10-yr / 10% AEP) Q=10846 CFS						Check Event (100-yr / 1% AEP) Q=21003 CFS					
	Existing Conditions W.S. Elev. = 604.77			Proposed Conditions W.S. Elev. = 604.77			Existing Conditions W.S. Elev. = 611.20			Proposed Conditions W.S. Elev. = 611.20		
	L.O.B.	CHAN.	R.O.B.	L.O.B.	CHAN.	R.O.B.	L.O.B.	CHAN.	R.O.B.	L.O.B.	CHAN.	R.O.B.
AREA		1961.62			1961.97			2983.47	2548.75		2983.62	2549.25
W.P.		162.10			162.11			176.58	548.16		176.58	548.16
R		12.10			12.10			16.90	4.65		16.90	4.65
S		0.001009			0.001009			0.000671			0.000671	
n	0.060	0.045	0.065	0.060	0.045	0.065	0.060	0.045	0.065	0.060	0.045	0.065
Q		10843.0			10846.0			16797.7	4203.26		16798.5	4204.49
V		5.53			5.53			5.63	1.65		5.63	1.65
	Avg. Vel.	5.53	FPS	Avg. Vel. =	5.53	FPS	Avg. Vel. =	3.80	FPS	Avg. Vel. =	3.80	FPS

ABBREVIATIONS:

USACE U.S. ARMY CORPS OF ENGINEERS
NRCS NATURAL RESOURCE CONSERVATION SERVICE
USGS U.S. GEOLOGIC SURVEY

COMMENTS:

1. AS SHOWN ON FEMA MAP PANEL 48439C0180, DATED SEPTEMBER 25, 2009, BIG FOSSIL CREEK AT THE PROJECT SITE IS A ZONE AE, DETAILED STUDY OF 100-YR FLOODPLAIN; A FLOODWAY IS ALSO DELINEATED IN THE FEMA FLOOD INSURANCE STUDY (FIS). ANALYSIS USING THE FEMA 100-YR FLOW RATE INDICATES NO RISE IN FLOODWAY WATER SURFACE ELEVATIONS OUTSIDE THE TXDOT ROW, DUE TO PROPOSED CONDITIONS.
2. HYDRAULIC ANALYSIS PERFORMED USING HEC-RAS VERSION 4.0. THE FEMA EFFECTIVE FIS MODEL WAS OBTAINED AND REVISED WITH PROJECT SURVEY DATA TO CREATE THE EXISTING AND PROPOSED CONDITION MODELS.
3. DOWNSTREAM BOUNDARY CONDITION IS BASED ON KNOWN WATER SURFACE ELEVATIONS FOR THE FEMA FIS AT RS 46980; STARTING WATER SURFACE ELEVATIONS FOR THE DESIGN FLOW RATES WERE INTERPOLATED FROM A RATING CURVE BASED ON THE FEMA MODELED FLOW RATES.
4. HYDROLOGIC AND HYDRAULIC MODELING PROVIDED TO THE CITY OF FORT WORTH FLOODPLAIN ADMINISTRATOR ON _____.

STATE OF TEXAS
JAIME K. BENOLIEL
96693
LICENSED PROFESSIONAL ENGINEER

7/9/12

H & H RESOURCES, INC (TBPE F-3678)

H & H RESOURCES
CIVIL ENGINEERS
TBPE REGISTRATION NO. F-3678

Texas Department of Transportation
© 2012

IH 35W FROM NORTH TARRANT PKWY TO IH 820

HYDRAULIC DATA SHEET
BIG FOSSIL CREEK
IH 35W SB FRONTAGE ROAD

SHEET 4 OF 8

DESIGN	FED. RD. DIV. NO.	FEDERAL AID PROJECT NO.		HIGHWAY NO.
JKB	6	(SEE TITLE SHEET)		IH 35W
GRAPHICS CA	STATE	DISTRICT	COUNTY	SHEET NO.
CHECK JKB	TEXAS	FTW	TARRANT	1148
CHECK JT	CONTROL 0014	SECTION 16	JOB 255, ETC.	

FILENAME: S3BD*HDS*BFC*04.dgn

DRAWING DATE: 7/13/2012

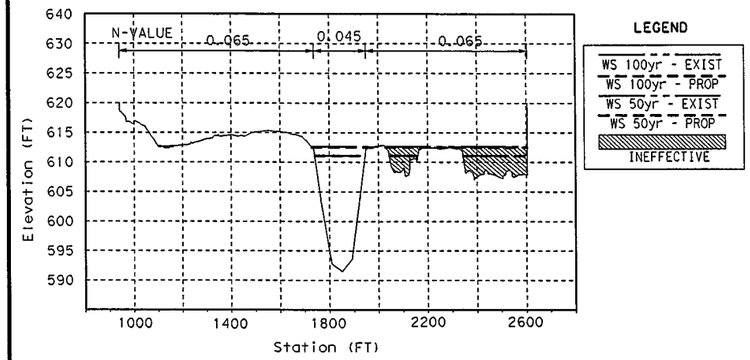

UPSTREAM APPROACH: SECTION 58835

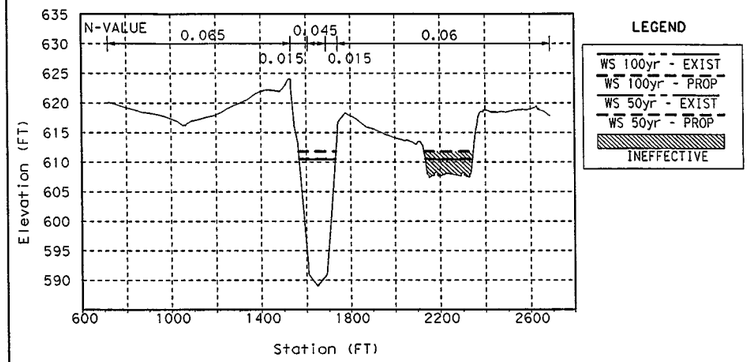

DOWNSTREAM AT BRIDGE: SECTION 58686

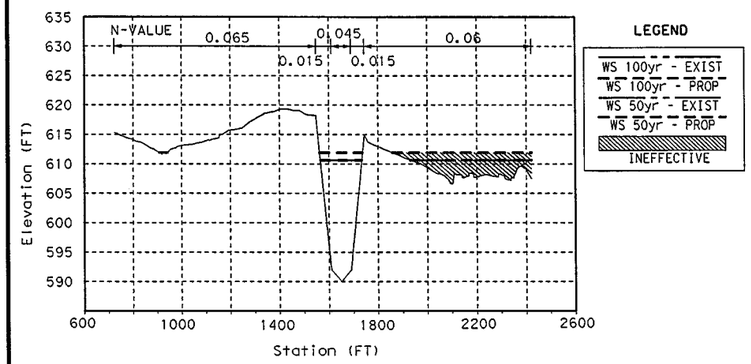

UPSTREAM AT BRIDGE: SECTION 58718

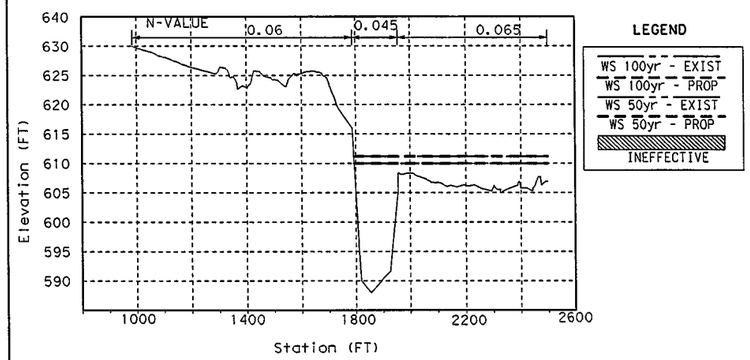

DOWNSTREAM EXIT: SECTION 58170

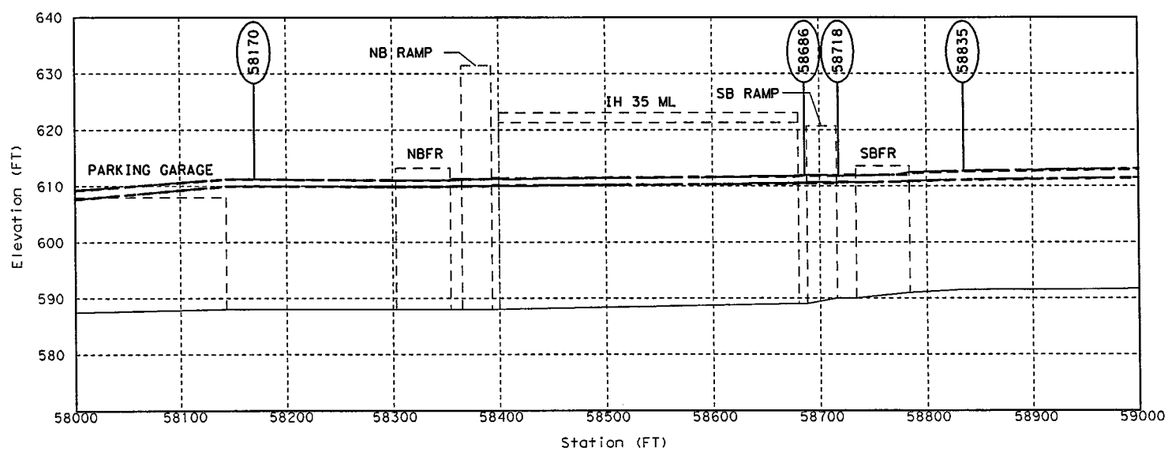

STREAM PROFILE

Upstream Approach: Station 58835

	Design Flow (50-yr / 2% AEP) Q=18155 CFS						Check Event (100-yr / 1% APR) Q=21003 CFS					
	Existing Conditions W.S. Elev. = 611.12			Proposed Conditions W.S. Elev. = 611.09			Existing Conditions W.S. Elev. = 612.68			Proposed Conditions W.S. Elev. = 612.55		
	L.O.B.	CHAN.	R.O.B.	L.O.B.	CHAN.	R.O.B.	L.O.B.	CHAN.	R.O.B.	L.O.B.	CHAN.	R.O.B.
AREA		2689.90			2683.11		10.09	3015.98	9.69	3.03	2988.43	4.30
W.P.		209.42			209.20		75.64	217.71	47.27	35.55	217.71	33.39
R		12.84			12.83		0.13	13.85	0.20	0.09	13.73	0.13
S		0.001388			0.001399			0.001336			0.001378	
n	0.065	0.045	0.060	0.065	0.045	0.060	0.065	0.045	0.060	0.065	0.045	0.060
Q		18152.0			18155.0		2.45	20995.5	3.05	0.63	21001.4	1.01
V		6.75			6.77		0.24	6.96	0.31	0.21	7.03	0.23
	Avg. Vel.	6.75	FPS	Avg. Vel. =	6.77	FPS	Avg. Vel. =	6.92	FPS	Avg. Vel. =	7.01	FPS

Upstream at Bridge: Ex Station 58690 / Pr Station 58718

	Design Flow (50-yr / 2% AEP) Q=18155 CFS						Check Event (100-yr / 1% APR) Q= 21003 CFS					
	Existing Conditions W.S. Elev. = 610.63			Proposed Conditions W.S. Elev. = 610.64			Existing Conditions W.S. Elev. = 611.90			Proposed Conditions W.S. Elev. = 611.95		
	L.O.B.	CHAN.	R.O.B.	L.O.B.	CHAN.	R.O.B.	L.O.B.	CHAN.	R.O.B.	L.O.B.	CHAN.	R.O.B.
AREA		2515.80			2408.28			2732.37			2632.23	
W.P.		175.56			176.07			181.68			183.98	
R		14.33			13.68			15.04			14.31	
S		0.000635			0.000735			0.000655			0.000747	
n	0.065	0.031	0.060	0.065	0.031	0.060	0.065	0.030	0.060	0.065	0.030	0.060
Q		18152.0			18155.0			21001.0			21003.0	
V		7.22			7.54			7.69			7.98	
	Avg. Vel.	7.22	FPS	Avg. Vel. =	7.54	FPS	Avg. Vel. =	7.69	FPS	Avg. Vel. =	7.98	FPS
				US Face of Bridge W.S. Elev. = 610.52						US Face of Bridge W.S. Elev. = 611.81		
				Avg. Vel.	7.93	FPS				Avg. Vel.	8.39	FPS

Downstream at Bridge: Ex Station 58650 / Pr Station 58686

	Design Flow (50-yr / 2% AEP) Q=18155 CFS						Check Event (100-yr / 1% APR) Q= 21003 CFS					
	Existing Conditions W.S. Elev. = 610.46			Proposed Conditions W.S. Elev. = 610.54			Existing Conditions W.S. Elev. = 611.72			Proposed Conditions W.S. Elev. = 611.83		
	L.O.B.	CHAN.	R.O.B.	L.O.B.	CHAN.	R.O.B.	L.O.B.	CHAN.	R.O.B.	L.O.B.	CHAN.	R.O.B.
AREA		2448.89			2444.90			2657.39			2657.47	
W.P.		172.14			171.20			178.07			177.22	
R		14.23			14.28			14.92			15.00	
S		0.000688			0.000690			0.000712			0.000711	
n	0.065	0.031	0.060	0.065	0.031	0.060	0.065	0.030	0.060	0.065	0.030	0.060
Q		18152.0			18155.0			21001.0			21003.0	
V		7.41			7.43			7.90			7.90	
	Avg. Vel.	7.41	FPS	Avg. Vel. =	7.43	FPS	Avg. Vel. =	7.90	FPS	Avg. Vel. =	7.90	FPS

Downstream (Exit) : Station 58170

	Design Flow (50-yr / 2% AEP) Q=18155 CFS						Check Event (100-yr / 1% APR) Q=21003 CFS					
	Existing Conditions W.S. Elev. = 609.97			Proposed Conditions W.S. Elev. = 609.97			Existing Conditions W.S. Elev. = 611.20			Proposed Conditions W.S. Elev. = 611.20		
	L.O.B.	CHAN.	R.O.B.	L.O.B.	CHAN.	R.O.B.	L.O.B.	CHAN.	R.O.B.	L.O.B.	CHAN.	R.O.B.
AREA		2784.77	1884.63		2784.44	1883.54		2983.47	2548.75		2983.62	2549.25
W.P.		174.70	546.93		174.70	546.93		176.58	548.16		176.58	548.16
R		15.94	3.45		15.94	3.44		16.90	4.65		16.90	4.65
S		0.000711			0.000712			0.000671			0.000671	
n	0.060	0.045	0.065	0.060	0.045	0.065	0.060	0.045	0.065	0.060	0.045	0.065
Q		15531.0	2621.03		15535.3	2619.71		16797.7	4203.26		16798.5	4204.49
V		5.58	1.39		5.58	1.39		5.63	1.65		5.63	1.65
	Avg. Vel.	3.89	FPS	Avg. Vel. =	3.89	FPS	Avg. Vel. =	3.80	FPS	Avg. Vel. =	3.80	FPS

ABBREVIATIONS:

USACE U.S. ARMY CORPS OF ENGINEERS
NRCS NATURAL RESOURCE CONSERVATION SERVICE
USGS U.S. GEOLOGIC SURVEY

COMMENTS:

1. AS SHOWN ON FEMA MAP PANEL 48439C0180, DATED SEPTEMBER 25, 2009, BIG FOSSIL CREEK AT THE PROJECT SITE IS A ZONE AE, DETAILED STUDY OF 100-YR FLOODPLAIN; A FLOODWAY IS ALSO DELINEATED IN THE FEMA FLOOD INSURANCE STUDY (FIS). ANALYSIS USING THE FEMA 100-YR FLOW RATE INDICATES NO RISE IN FLOODWAY WATER SURFACE ELEVATIONS OUTSIDE THE TXDOT ROW, DUE TO PROPOSED CONDITIONS.
2. HYDRAULIC ANALYSIS PERFORMED USING HEC-RAS VERSION 4.0. THE FEMA EFFECTIVE FIS MODEL WAS OBTAINED AND REVISED WITH PROJECT SURVEY DATA TO CREATE THE EXISTING AND PROPOSED CONDITION MODELS.
3. DOWNSTREAM BOUNDARY CONDITION IS BASED ON KNOWN WATER SURFACE ELEVATIONS FOR THE FEMA FIS AT RS 46980; STARTING WATER SURFACE ELEVATIONS FOR THE DESIGN FLOW RATES WERE INTERPOLATED FROM A RATING CURVE BASED ON THE FEMA MODELED FLOW RATES.
4. HYDROLOGIC AND HYDRAULIC MODELING PROVIDED TO THE CITY OF FORT WORTH FLOODPLAIN ADMINISTRATOR ON _____.

STATE OF TEXAS
JAIME K. BENOLIEL
96693
LICENSED
PROFESSIONAL ENGINEER

7/9/12
H & H RESOURCES, INC (TBPE F-3678)

H & H RESOURCES
CIVIL ENGINEERS
TBPE REGISTRATION NO. F-3678

Texas Department of Transportation
© 2012

IH 35W FROM NORTH TARRANT PKWY TO IH 820

HYDRAULIC DATA SHEET
BIG FOSSIL CREEK
IH 35W SB ENTRANCE RAMP

SHEET 5 OF 8

DESIGN	FED. RD. DIV. NO.	FEDERAL AID PROJECT NO.		HIGHWAY NO.
JKB	6	(SEE TITLE SHEET)		IH 35W
GRAPHICS CA	STATE	DISTRICT	COUNTY	SHEET NO.
CHECK JKB	TEXAS	FTW	TARRANT	1149
CHECK JT	CONTROL 0014	SECTION 16	JOB 255, ETC.	

FILENAME: S3BD*HDS*BFC*05.dgn
DRAWING DATE: 7/13/2012

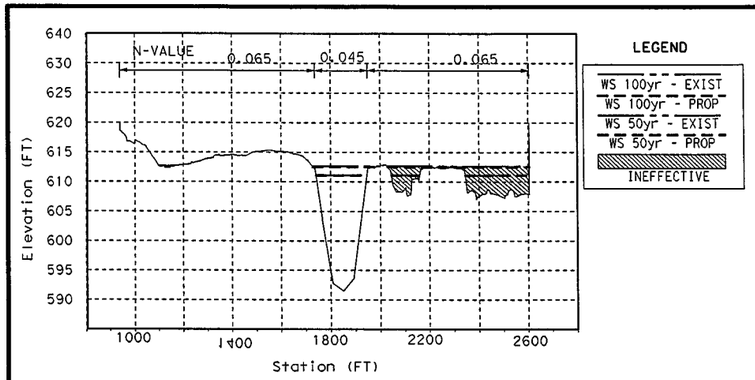

UPSTREAM APPROACH: SECTION 58835

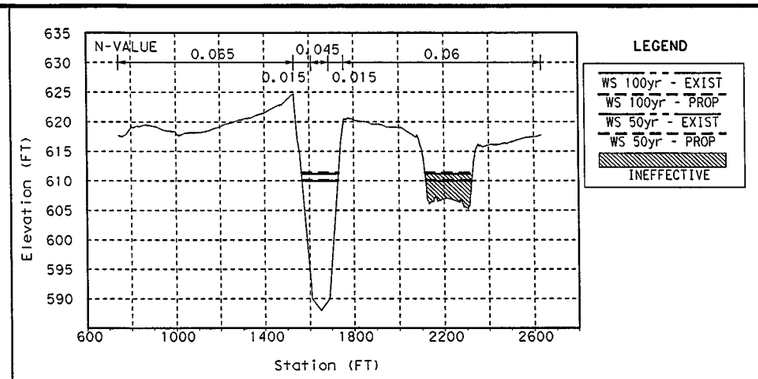

DOWNSTREAM AT BRIDGE: SECTION 58398

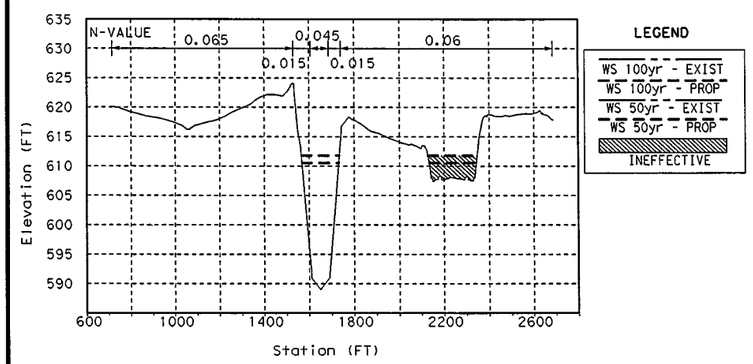

UPSTREAM AT BRIDGE: SECTION 58682

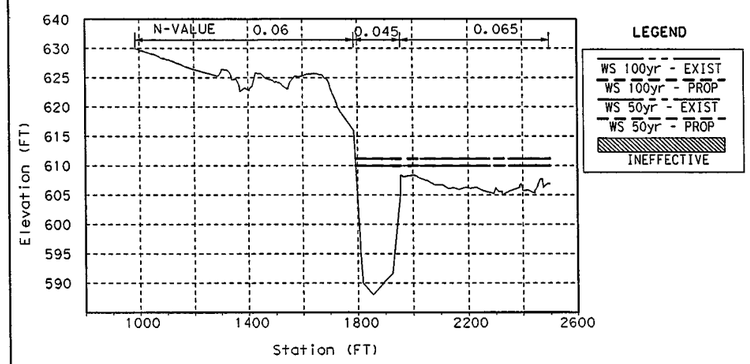

DOWNSTREAM EXIT: SECTION 58170

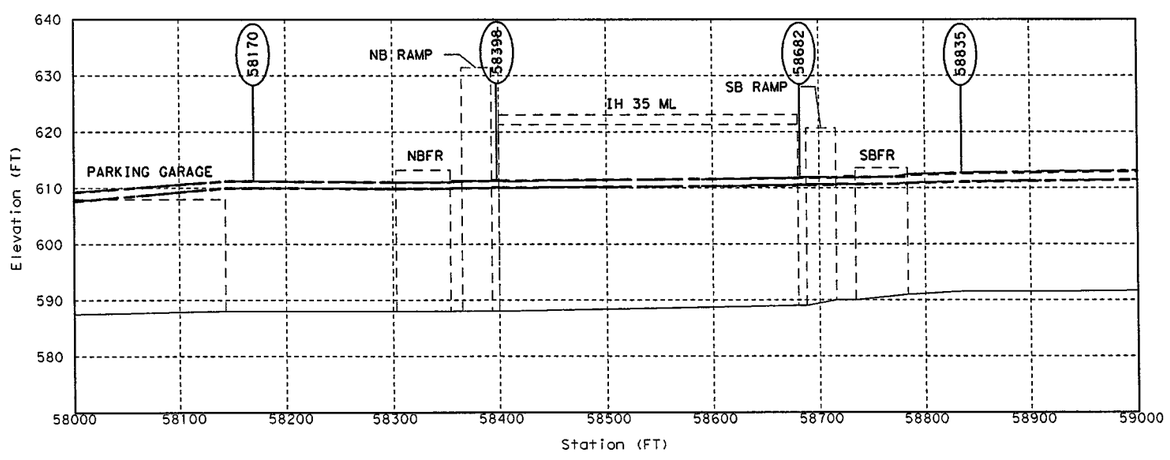

STREAM PROFILE

Upstream Approach: Station 58835

	Design Flow (50-yr / 2% AEP) Q= 18155 CFS						Check Event (100-yr / 1% AEP) Q= 21003 CFS					
	Existing Conditions W.S. Elev. = 611.12			Proposed Conditions W.S. Elev. = 611.09			Existing Conditions W.S. Elev. = 612.68			Proposed Conditions W.S. Elev. = 612.55		
	L.O.B.	CHAN.	R.O.B.	L.O.B.	CHAN.	R.O.B.	L.O.B.	CHAN.	R.O.B.	L.O.B.	CHAN.	R.O.B.
AREA		2689.90			2683.11		10.09	3015.98	9.69	3.03	2988.43	4.30
W.P.		209.42			209.20		75.64	217.71	47.27	35.55	217.71	33.39
R		12.84			12.83		0.13	13.85	0.20	0.09	13.73	0.13
S		0.001388			0.001399			0.001336			0.001378	
n	0.065	0.045	0.060	0.065	0.045	0.060	0.065	0.045	0.060	0.065	0.045	0.060
Q		18152.0			18155.0		2.45	20995.5	3.05	0.63	21001.4	1.01
V		6.75			6.77		0.24	6.96	0.31	0.21	7.03	0.23
	Avg. Vel.	6.75	FPS	Avg. Vel. =	6.77	FPS	Avg. Vel. =	6.92	FPS	Avg. Vel. =	7.01	FPS

Upstream at Bridge: Ex Station 58635 / Pr Station 58682

	Design Flow (50-yr / 2% AEP) Q= 18155 CFS						Check Event (100-yr / 1% AEP) Q= 21003 CFS					
	Existing Conditions W.S. Elev. = 610.43			Proposed Conditions W.S. Elev. = 610.53			Existing Conditions W.S. Elev. = 611.68			Proposed Conditions W.S. Elev. = 611.82		
	L.O.B.	CHAN.	R.O.B.	L.O.B.	CHAN.	R.O.B.	L.O.B.	CHAN.	R.O.B.	L.O.B.	CHAN.	R.O.B.
AREA		2427.69			2444.37			2633.68			2656.89	
W.P.		170.71			171.19			176.56			177.20	
R		14.22			14.28			14.92			14.99	
S		0.000706			0.000691			0.000731			0.000711	
n	0.065	0.031	0.060	0.065	0.031	0.060	0.065	0.031	0.060	0.065	0.030	0.060
Q		18152.0			18155.0			21001.0			21003.0	
V		7.48			7.43			7.97			7.91	
	Avg. Vel.	7.48	FPS	Avg. Vel. =	7.43	FPS	Avg. Vel. =	7.97	FPS	Avg. Vel. =	7.91	FPS
				US Face of Bridge W.S. Elev. =	610.42					US Face of Bridge W.S. Elev. =	611.69	
				Avg. Vel.	7.81	FPS				Avg. Vel.	8.31	FPS

Downstream at Bridge: Ex Station 58450 / Pr Station 58398

	Design Flow (50-yr / 2% AEP) Q= 18155 CFS						Check Event (100-yr / 1% AEP) Q= 21003 CFS					
	Existing Conditions W.S. Elev. = 610.15			Proposed Conditions W.S. Elev. = 610.11			Existing Conditions W.S. Elev. = 611.38			Proposed Conditions W.S. Elev. = 611.37		
	L.O.B.	CHAN.	R.O.B.	L.O.B.	CHAN.	R.O.B.	L.O.B.	CHAN.	R.O.B.	L.O.B.	CHAN.	R.O.B.
AREA		2517.72			2511.92			2719.72			2718.53	
W.P.		171.64			171.48			177.23			177.20	
R		14.67			14.65			15.35			15.34	
S		0.000626			0.000631			0.000658			0.000659	
n	0.065	0.031	0.060	0.065	0.031	0.060	0.065	0.030	0.060	0.065	0.030	0.060
Q		18152.0			18155.0			21001.0			21003.0	
V		7.21			7.23			7.72			7.73	
	Avg. Vel.	7.21	FPS	Avg. Vel. =	7.23	FPS	Avg. Vel. =	7.72	FPS	Avg. Vel. =	7.73	FPS

Downstream (Exit) : Station 58170

	Design Flow (50-yr / 2% AEP) Q= 18155 CFS						Check Event (100-yr / 1% AEP) Q= 21003 CFS					
	Existing Conditions W.S. Elev. = 609.97			Proposed Conditions W.S. Elev. = 609.97			Existing Conditions W.S. Elev. = 611.20			Proposed Conditions W.S. Elev. = 611.20		
	L.O.B.	CHAN.	R.O.B.	L.O.B.	CHAN.	R.O.B.	L.O.B.	CHAN.	R.O.B.	L.O.B.	CHAN.	R.O.B.
AREA		2784.77	1884.63		2784.44	1883.54		2983.47	2548.75		2983.62	2549.25
W.P.		174.70	546.93		174.70	546.93		176.58	548.16		176.58	548.16
R		15.94	3.45		15.94	3.44		16.90	4.65		16.90	4.65
S		0.000711			0.000712			0.000671			0.000671	
n	0.060	0.045	0.065	0.060	0.045	0.065	0.060	0.045	0.065	0.060	0.045	0.065
Q		15531.0	2621.03		15535.3	2619.71		16797.7	4203.26		16798.5	4204.49
V		5.58	1.39		5.58	1.39		5.63	1.65		5.63	1.65
	Avg. Vel.	3.89	FPS	Avg. Vel. =	3.89	FPS	Avg. Vel. =	3.80	FPS	Avg. Vel. =	3.80	FPS

ABBREVIATIONS:

USACE U.S. ARMY CORPS OF ENGINEERS
NRCS NATURAL RESOURCE CONSERVATION SERVICE
USGS U.S. GEOLOGIC SURVEY

COMMENTS:

1. AS SHOWN ON FEMA MAP PANEL 48439C0180, DATED SEPTEMBER 25, 2009, BIG FOSSIL CREEK AT THE PROJECT SITE IS A ZONE AE, DETAILED STUDY OF 100-YR FLOODPLAIN; A FLOODWAY IS ALSO DELINEATED IN THE FEMA FLOOD INSURANCE STUDY (FIS). ANALYSIS USING THE FEMA 100-YR FLOW RATE INDICATES NO RISE IN FLOODWAY WATER SURFACE ELEVATIONS OUTSIDE THE TXDOT ROW, DUE TO PROPOSED CONDITIONS.
2. HYDRAULIC ANALYSIS PERFORMED USING HEC-RAS VERSION 4.0. THE FEMA EFFECTIVE FIS MODEL WAS OBTAINED AND REVISED WITH PROJECT SURVEY DATA TO CREATE THE EXISTING AND PROPOSED CONDITION MODELS.
3. DOWNSTREAM BOUNDARY CONDITION IS BASED ON KNOWN WATER SURFACE ELEVATIONS FOR THE FEMA FIS AT RS 46980; STARTING WATER SURFACE ELEVATIONS FOR THE DESIGN FLOW RATES WERE INTERPOLATED FROM A RATING CURVE BASED ON THE FEMA MODELED FLOW RATES.
4. HYDROLOGIC AND HYDRAULIC MODELING PROVIDED TO THE CITY OF FORT WORTH FLOODPLAIN ADMINISTRATOR ON _____.

STATE OF TEXAS
JAIME K. BENOLIEL
96693
LICENSED
PROFESSIONAL ENGINEER

7/9/12

H & H RESOURCES, INC (TBPE F-3678)

H & H RESOURCES
CIVIL ENGINEERS
TBPE REGISTRATION NO. F-3678

Texas Department of Transportation
© 2012

IH 35W FROM NORTH TARRANT PKWY TO IH 820

HYDRAULIC DATA SHEET
BIG FOSSIL CREEK
IH 35W MAIN LANES

SHEET 6 OF 8

DESIGN	FED. RD. DIV. NO.	FEDERAL AID PROJECT NO.		HIGHWAY NO.
JKB	6	(SEE TITLE SHEET)		IH 35W
GRAPHICS CA	STATE	DISTRICT	COUNTY	SHEET NO.
CHECK JKB	TEXAS	FTW	TARRANT	1150
CHECK JT	CONTROL 0014	SECTION 16	JOB 255, ETC.	

FILENAME: S3BD*HDS*BFC*06.dgn

DRAWING DATE: 7/13/2012

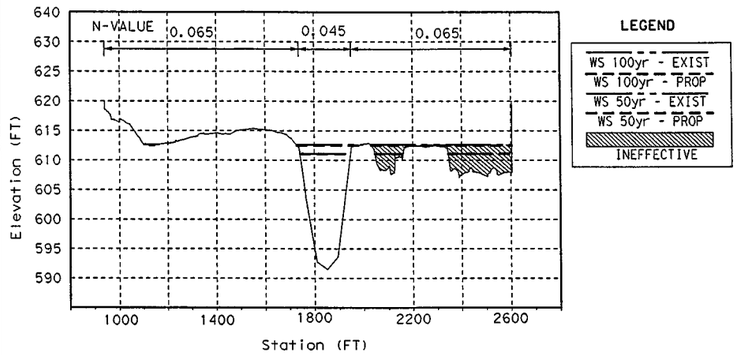

UPSTREAM APPROACH: SECTION 58835

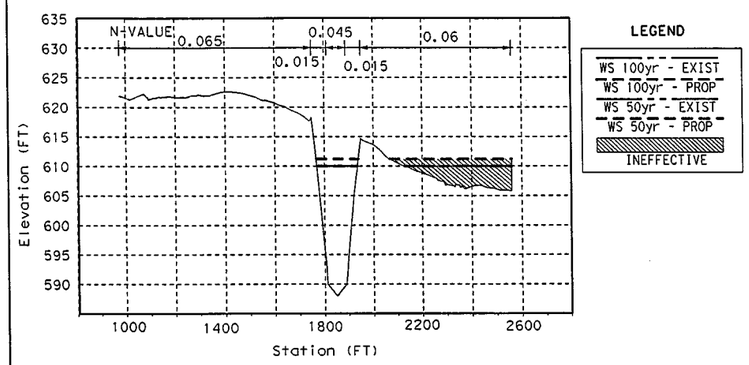

DOWNSTREAM AT BRIDGE: SECTION 58363

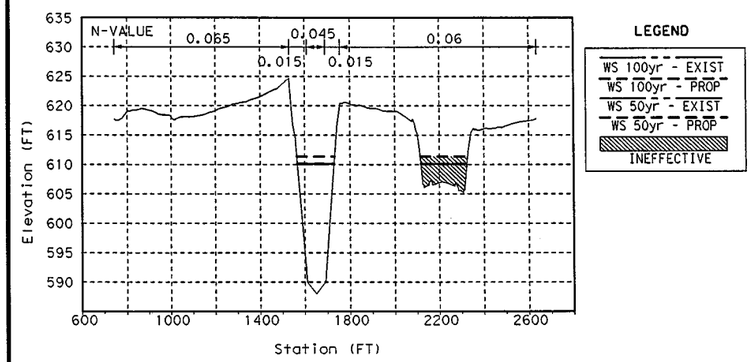

UPSTREAM AT BRIDGE: SECTION 58394

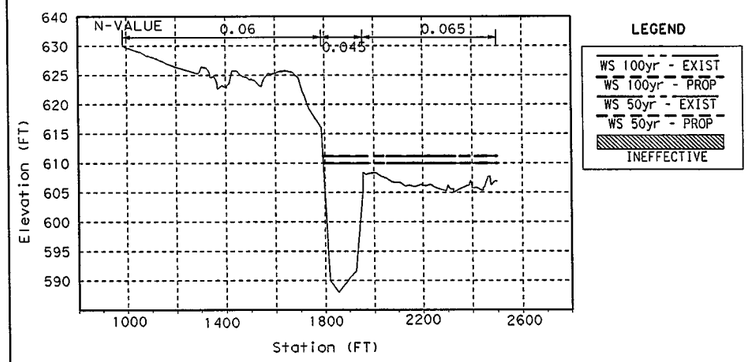

DOWNSTREAM EXIT: SECTION 58170

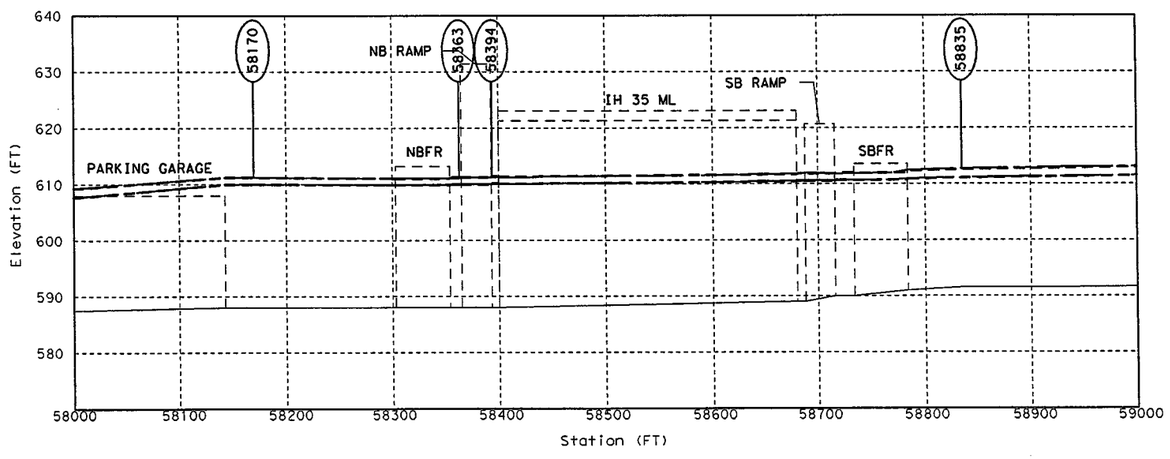

STREAM PROFILE

Upstream Approach: Station 58835

	Design Flow (50-yr / 2% AEP) Q= 18155 CFS						Check Event (100-yr / 1% AEP) Q= 21003 CFS					
	Existing Conditions W.S. Elev. = 611.12			Proposed Conditions W.S. Elev. = 611.09			Existing Conditions W.S. Elev. = 612.68			Proposed Conditions W.S. Elev. = 612.55		
	L.O.B.	CHAN.	R.O.B.	L.O.B.	CHAN.	R.O.B.	L.O.B.	CHAN.	R.O.B.	L.O.B.	CHAN.	R.O.B.
AREA		2689.90			2683.11		10.09	3015.98	9.69	3.03	2988.43	4.30
W.P.		209.42			209.20		75.64	217.71	47.27	35.55	217.71	33.39
R		12.84			12.83		0.13	13.85	0.20	0.09	13.73	0.13
S		0.001388			0.001399			0.001336			0.001378	
n	0.065	0.045	0.060	0.065	0.045	0.060	0.065	0.045	0.060	0.065	0.045	0.060
Q		18152.0			18155.0		2.45	20995.5	3.05	0.63	21001.4	1.01
V		6.75			6.77		0.24	6.96	0.31	0.21	7.03	0.23
	Avg. Vel.	6.75	FPS	Avg. Vel. =	6.77	FPS	Avg. Vel. =	6.92	FPS	Avg. Vel. =	7.01	FPS

Upstream at Bridge: Ex Station 58440 / Pr Station 58394

	Design Flow (50-yr / 2% AEP) Q= 18155 CFS						Check Event (100-yr / 1% AEP) Q= 21003 CFS					
	Existing Conditions W.S. Elev. = 610.12			Proposed Conditions W.S. Elev. = 610.11			Existing Conditions W.S. Elev. = 611.34			Proposed Conditions W.S. Elev. = 611.37		
	L.O.B.	CHAN.	R.O.B.	L.O.B.	CHAN.	R.O.B.	L.O.B.	CHAN.	R.O.B.	L.O.B.	CHAN.	R.O.B.
AREA		2485.13			2511.44			2683.28			2718.00	
W.P.		169.69			171.47			175.35			177.18	
R		14.65			14.65			15.30			15.34	
S		0.000651			0.000632			0.000685			0.000659	
n	0.065	0.031	0.060	0.065	0.031	0.060	0.065	0.031	0.060	0.065	0.030	0.060
Q		18152.0			18155.0			21001.0			21003.0	
V		7.30			7.23			7.83			7.73	
	Avg. Vel.	7.30	FPS	Avg. Vel. =	7.23	FPS	Avg. Vel. =	7.83	FPS	Avg. Vel. =	7.73	FPS
				US Face of Bridge W.S. Elev. = 610						US Face of Bridge W.S. Elev. = 611.24		
				Avg. Vel.	7.59	FPS				Avg. Vel.	8.12	FPS

Downstream at Bridge: Ex Station 58398 / Pr Station 58363

	Design Flow (50-yr / 2% AEP) Q= 18155 CFS						Check Event (100-yr / 1% AEP) Q= 21003 CFS					
	Existing Conditions W.S. Elev. = 610			Proposed Conditions W.S. Elev. = 609.99			Existing Conditions W.S. Elev. = 611.20			Proposed Conditions W.S. Elev. = 611.24		
	L.O.B.	CHAN.	R.O.B.	L.O.B.	CHAN.	R.O.B.	L.O.B.	CHAN.	R.O.B.	L.O.B.	CHAN.	R.O.B.
AREA		2474.94			2485.04			2672.33			2696.13	
W.P.		170.97			175.32			176.50			182.04	
R		14.48			14.17			15.14			14.81	
S		0.000662			0.000661			0.000696			0.000686	
n	0.065	0.031	0.060	0.065	0.031	0.060	0.065	0.031	0.060	0.065	0.030	0.060
Q		18152.0			18155.0			21001.0			21003.0	
V		7.33			7.31			7.86			7.79	
	Avg. Vel.	7.33	FPS	Avg. Vel. =	7.31	FPS	Avg. Vel. =	7.86	FPS	Avg. Vel. =	7.79	FPS

Downstream (Exit) : Station 58170

	Design Flow (50-yr / 2% AEP) Q= 18155 CFS						Check Event (100-yr / 1% AEP) Q= 21003 CFS					
	Existing Conditions W.S. Elev. = 609.97			Proposed Conditions W.S. Elev. = 609.97			Existing Conditions W.S. Elev. = 611.20			Proposed Conditions W.S. Elev. = 611.20		
	L.O.B.	CHAN.	R.O.B.	L.O.B.	CHAN.	R.O.B.	L.O.B.	CHAN.	R.O.B.	L.O.B.	CHAN.	R.O.B.
AREA		2784.77	1884.63		2784.44	1883.54		2983.47	2548.75		2983.62	2549.25
W.P.		174.70	546.93		174.70	546.93		176.58	548.16		176.58	548.16
R		15.94	3.45		15.94	3.44		16.90	4.65		16.90	4.65
S		0.000711			0.000712			0.000671			0.000671	
n	0.060	0.045	0.065	0.060	0.045	0.065	0.060	0.045	0.065	0.060	0.045	0.065
Q		15531.0	2621.03		15535.3	2619.71		16797.7	4203.26		16798.5	4204.49
V		5.58	1.39		5.58	1.39		5.63	1.65		5.63	1.65
	Avg. Vel.	3.89	FPS	Avg. Vel. =	3.89	FPS	Avg. Vel. =	3.80	FPS	Avg. Vel. =	3.80	FPS

ABBREVIATIONS:

USACE U.S. ARMY CORPS OF ENGINEERS
NRCS NATURAL RESOURCE CONSERVATION SERVICE
USGS U.S. GEOLOGIC SURVEY

COMMENTS:

1. AS SHOWN ON FEMA MAP PANEL 48439C0180, DATED SEPTEMBER 25, 2009, BIG FOSSIL CREEK AT THE PROJECT SITE IS A ZONE AE, DETAILED STUDY OF 100-YR FLOODPLAIN; A FLOODWAY IS ALSO DELINEATED IN THE FEMA FLOOD INSURANCE STUDY (FIS). ANALYSIS USING THE FEMA 100-YR FLOW RATE INDICATES NO RISE IN FLOODWAY WATER SURFACE ELEVATIONS OUTSIDE THE TXDOT ROW, DUE TO PROPOSED CONDITIONS.
2. HYDRAULIC ANALYSIS PERFORMED USING HEC-RAS VERSION 4.0. THE FEMA EFFECTIVE FIS MODEL WAS OBTAINED AND REVISED WITH PROJECT SURVEY DATA TO CREATE THE EXISTING AND PROPOSED CONDITION MODELS.
3. DOWNSTREAM BOUNDARY CONDITION IS BASED ON KNOWN WATER SURFACE ELEVATIONS FOR THE FEMA FIS AT RS 46980; STARTING WATER SURFACE ELEVATIONS FOR THE DESIGN FLOW RATES WERE INTERPOLATED FROM A RATING CURVE BASED ON THE FEMA MODELED FLOW RATES.
4. HYDROLOGIC AND HYDRAULIC MODELING PROVIDED TO THE CITY OF FORT WORTH FLOODPLAIN ADMINISTRATOR ON _____.

STATE OF TEXAS
JAIME K. BENOLIEL
96693
LICENSED
PROFESSIONAL ENGINEER

7/9/12

H & H RESOURCES, INC (TBPE F-3678)

H & H RESOURCES
CIVIL ENGINEERS
TBPE REGISTRATION NO. F-3678

Texas Department of Transportation
© 2012

IH 35W FROM NORTH TARRANT PKWY TO IH 820

HYDRAULIC DATA SHEET
BIG FOSSIL CREEK
IH 35W NB EXIT RAMP

SHEET 7 OF 8

DESIGN	FED. RD. DIV. NO.	FEDERAL AID PROJECT NO.		HIGHWAY NO.
JKB	6	(SEE TITLE SHEET)		IH 35W
GRAPHICS CA	STATE	DISTRICT	COUNTY	SHEET NO.
CHECK JKB	TEXAS	FTW	TARRANT	1151
CHECK JT	CONTROL 0014	SECTION 16	JOB 255, ETC.	

FILENAME: S3BD#HDS#BFC#07.dgn

DRAWING DATE: 7/13/2012

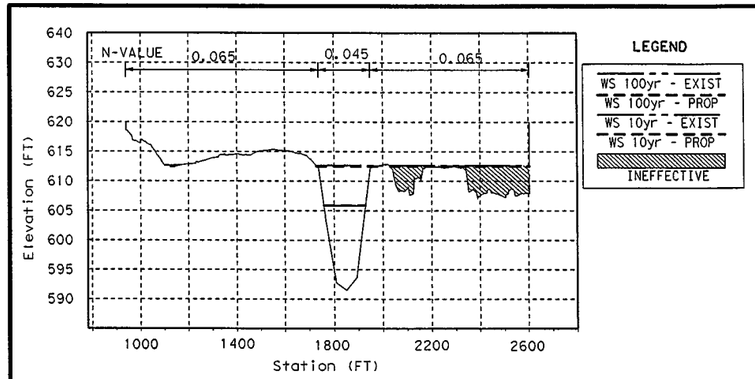

UPSTREAM APPROACH: SECTION 58835

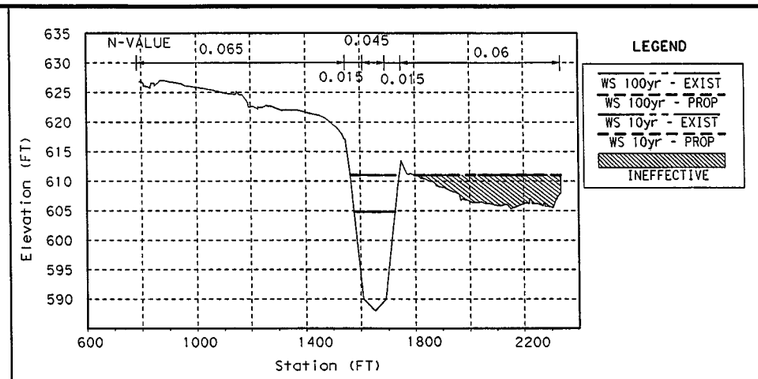

DOWNSTREAM AT BRIDGE: SECTION 58295

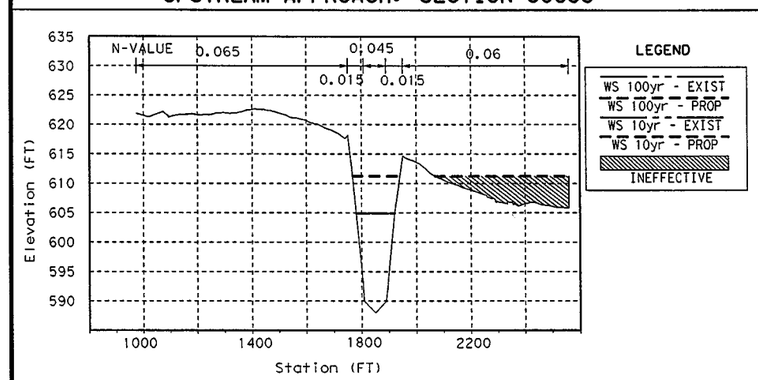

UPSTREAM AT BRIDGE: SECTION 58357

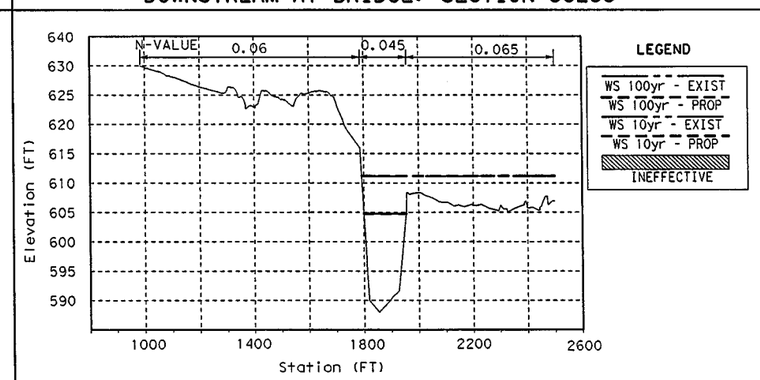

DOWNSTREAM EXIT: SECTION 58170

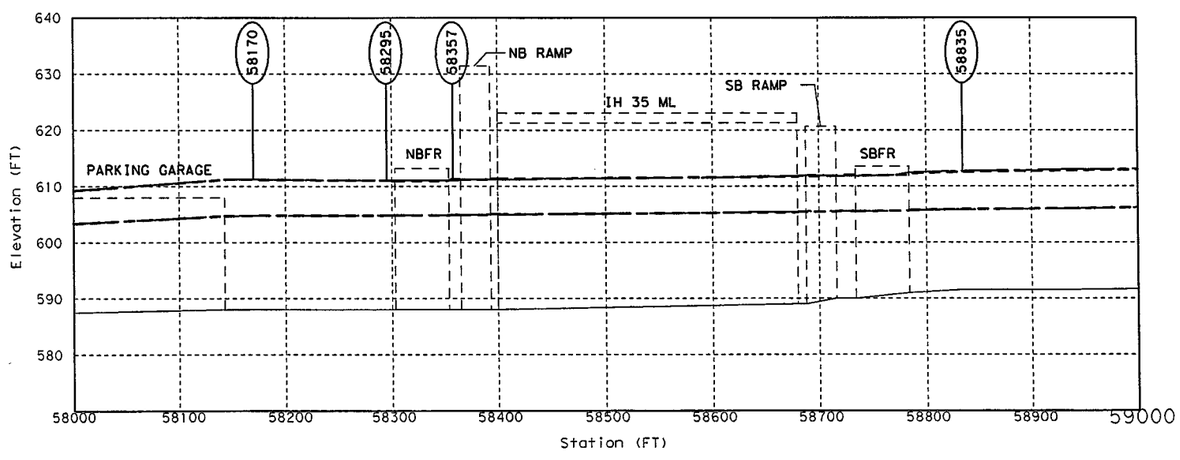

STREAM PROFILE

Upstream Approach: Station 58835

	Design Flow (10-yr / 10% AEP) Q= 10846 CFS						Check Event (100-yr / 1% AEP) Q= 21003 CFS					
	Existing Conditions W.S. Elev. = 605.84			Proposed Conditions W.S. Elev. = 605.88			Existing Conditions W.S. Elev. = 612.68			Proposed Conditions W.S. Elev. = 612.55		
	L.O.B.	CHAN.	R.O.B.	L.O.B.	CHAN.	R.O.B.	L.O.B.	CHAN.	R.O.B.	L.O.B.	CHAN.	R.O.B.
AREA		1699.42			1706.04		10.09	3015.98	9.69	3.03	2988.43	4.30
W.P.		174.97			175.22		75.64	217.71	47.27	35.55	217.71	33.39
R		9.71			9.74		0.13	13.85	0.20	0.09	13.73	0.13
S		0.001802			0.001783			0.001336			0.001378	
n	0.065	0.045	0.060	0.065	0.045	0.060	0.065	0.045	0.060	0.065	0.045	0.060
Q		10843.0			10846.0		2.45	20995.5	3.05	0.63	21001.4	1.01
V		6.38			6.36		0.24	6.96	0.31	0.21	7.03	0.23
	Avg. Vel.	6.38	FPS	Avg. Vel. =	6.36	FPS	Avg. Vel. =	6.92	FPS	Avg. Vel. =	7.01	FPS

Upstream at Bridge: Ex Station 58375 / Pr Station 58357

	Design Flow (10-yr / 10% AEP) Q= 10846 CFS						Check Event (100-yr / 1% AEP) Q= 21003CFS					
	Existing Conditions W.S. Elev. = 604.93			Proposed Conditions W.S. Elev. = 604.92			Existing Conditions W.S. Elev. = 611.19			Proposed Conditions W.S. Elev. = 611.23		
	L.O.B.	CHAN.	R.O.B.	L.O.B.	CHAN.	R.O.B.	L.O.B.	CHAN.	R.O.B.	L.O.B.	CHAN.	R.O.B.
AREA		1710.12			1709.14			2687.53			2695.25	
W.P.		147.20			147.16			180.63			182.01	
R		11.62			11.61			14.88			14.81	
S		0.000760			0.000762			0.000691			0.000687	
n	0.065	0.033	0.060	0.065	0.033	0.060	0.065	0.030	0.060	0.065	0.030	0.060
Q		10843.0			10846.0			21001.0			21003.0	
V		6.34			6.35			7.81			7.79	
	Avg. Vel.	6.34	FPS	Avg. Vel. =	6.35	FPS	Avg. Vel. =	7.81	FPS	Avg. Vel. =	7.79	FPS
				US Face of Bridge W.S. Elev. = 604.83						US Face of Bridge W.S. Elev. = 611.01		
				Avg. Vel.	6.70	FPS				Avg. Vel.	8.45	FPS

Downstream at Bridge: Station 58295

	Design Flow (10-yr / 10% AEP) Q= 10846 CFS						Check Event (100-yr / 1% AEP) Q= 21003 CFS					
	Existing Conditions W.S. Elev. = 604.82			Proposed Conditions W.S. Elev. = 604.83			Existing Conditions W.S. Elev. = 611.04			Proposed Conditions W.S. Elev. = 611.04		
	L.O.B.	CHAN.	R.O.B.	L.O.B.	CHAN.	R.O.B.	L.O.B.	CHAN.	R.O.B.	L.O.B.	CHAN.	R.O.B.
AREA		1785.92			1786.27			2792.85			2794.38	
W.P.		154.58			154.59			182.61			186.11	
R		11.55			11.55			15.29			15.01	
S		0.000671			0.000671			0.000611			0.000615	
n	0.065	0.032	0.060	0.065	0.032	0.060	0.065	0.030	0.060	0.065	0.030	0.060
Q		10843.0			10846.0			21001.0			21003.0	
V		6.07			6.07			7.52			7.52	
	Avg. Vel.	6.07	FPS	Avg. Vel. =	6.07	FPS	Avg. Vel. =	7.52	FPS	Avg. Vel. =	7.52	FPS

Downstream (Exit) : Station 58170

	Design Flow (10-yr / 10% AEP) Q= 10846 CFS						Check Event (100-yr / 1% AEP) Q= 21003 CFS					
	Existing Conditions W.S. Elev. = 604.77			Proposed Conditions W.S. Elev. = 604.77			Existing Conditions W.S. Elev. = 611.20			Proposed Conditions W.S. Elev. = 611.20		
	L.O.B.	CHAN.	R.O.B.	L.O.B.	CHAN.	R.O.B.	L.O.B.	CHAN.	R.O.B.	L.O.B.	CHAN.	R.O.B.
AREA		1961.62			1961.97			2983.47	2548.75		2983.62	2549.25
W.P.		162.10			162.11			176.58	548.16		176.58	548.16
R		12.10			12.10			16.90	4.65		16.90	4.65
S		0.001009			0.001009			0.000671			0.000671	
n	0.060	0.045	0.065	0.060	0.045	0.065	0.060	0.045	0.065	0.060	0.045	0.065
Q		10843.0			10846.0			16797.7	4203.26		16798.5	4204.49
V		5.53			5.53			5.63	1.65		5.63	1.65
	Avg. Vel.	5.53	FPS	Avg. Vel. =	5.53	FPS	Avg. Vel. =	3.80	FPS	Avg. Vel. =	3.80	FPS

ABBREVIATIONS:

USACE U.S. ARMY CORPS OF ENGINEERS
NRCS NATURAL RESOURCE CONSERVATION SERVICE
USGS U.S. GEOLOGIC SURVEY

COMMENTS:

1. AS SHOWN ON FEMA MAP PANEL 48439C0180, DATED SEPTEMBER 25, 2009, BIG FOSSIL CREEK AT THE PROJECT SITE IS A ZONE AE, DETAILED STUDY OF 100-YR FLOODPLAIN; A FLOODWAY IS ALSO DELINEATED IN THE FEMA FLOOD INSURANCE STUDY (FIS). ANALYSIS USING THE FEMA 100-YR FLOW RATE INDICATES NO RISE IN FLOODWAY WATER SURFACE ELEVATIONS OUTSIDE THE TXDOT ROW, DUE TO PROPOSED CONDITIONS.
2. HYDRAULIC ANALYSIS PERFORMED USING HEC-RAS VERSION 4.0. THE FEMA EFFECTIVE FIS MODEL WAS OBTAINED AND REVISED WITH PROJECT SURVEY DATA TO CREATE THE EXISTING AND PROPOSED CONDITION MODELS.
3. DOWNSTREAM BOUNDARY CONDITION IS BASED ON KNOWN WATER SURFACE ELEVATIONS FOR THE FEMA FIS AT RS 46980; STARTING WATER SURFACE ELEVATIONS FOR THE DESIGN FLOW RATES WERE INTERPOLATED FROM A RATING CURVE BASED ON THE FEMA MODELED FLOW RATES.
4. HYDROLOGIC AND HYDRAULIC MODELING PROVIDED TO THE CITY OF FORT WORTH FLOODPLAIN ADMINISTRATOR ON _____.

STATE OF TEXAS
JAIME K. BENOLIEL
96693
LICENSED
PROFESSIONAL ENGINEER

7/9/12

H & H RESOURCES, INC (TBPE F-3678)

H & H RESOURCES
CIVIL ENGINEERS
TBPE REGISTRATION NO. F-3678

Texas Department of Transportation
© 2012

IH 35W FROM NORTH TARRANT PKWY TO IH 820

HYDRAULIC DATA SHEET
BIG FOSSIL CREEK
IH 35W NB FRONTAGE ROAD

SHEET 8 OF 8

DESIGN JKB	FED.RD. DIV.NO. 6	FEDERAL AID PROJECT NO. (SEE TITLE SHEET)		HIGHWAY NO. IH 35W
GRAPHICS CA	STATE TEXAS	DISTRICT FTW	COUNTY TARRANT	SHEET NO. 1152
CHECK JKB	CONTROL 0014	SECTION 16	JOB 255, ETC.	
CHECK JT				

FILENAME: S3BD*HDS*BFC*08.dgn

DRAWING DATE: 7/13/2012

WinStorm (STORM DRAIN DESIGN) Version 3.05, Jan. 25, 2002
Run @ 4/26/2012 2:32:49 PM

PROJECT NAME : IH-35W S3B
JOB NUMBER : 0014-016-255
PROJECT DESCRIPTION : CULVERT 3: ℄ 35W ML STA 1547+54.36
DESIGN FREQUENCY : 50 Years
ANALYSYS FREQUENCY : 100 Years
MEASUREMENT UNITS: ENGLISH

OUTPUT FOR DESIGN FREQUENCY of: 50 Years

Runoff Computation for Design Frequency.

ID	C Value	Area (acre)	Tc (min)	Tc Used (min)	Intensity (in/hr)	Supply Q (cfs)	Total Q (cfs)
03-1	0.691	27.48	17.06	17.06	8.19	0.000	155.670
	0.9	8.33	Pavement				
	0.65	16.00	Developed				
	0.35	3.15	Undeveloped				
03-2	0.9	2.53	12.70	12.70	9.47	0.000	21.566
	0.9	2.53	Pavement				
03-3	0.9	2.39	11.90	11.90	9.76	0.000	20.989
	0.9	2.39	Pavement				
03-4	0.83	4.48	12.18	12.18	9.66	0.000	35.904
	0.9	3.91	Pavement				
	0.35	0.57	Undeveloped				
03-5	0.809	10.51	12.97	12.97	9.38	0.000	79.739
	0.9	8.77	Pavement				
	0.35	1.74	Undeveloped				

Cumulative Junction Discharge Computations

Node I.D.	Node Type	Weighted C-Value	Cumulat. Dr.Area (acres)	Cumulat. Tc (min)	Intens. (in/hr)	User Supply Q cfs)	Additional Q in Node (cfs)	Total Disch. (cfs)
03-1	CircMh	0.691	27.48	17.06	8.19	0.000	0.00	155.670
03-2	Junct	0.709	30.01	17.31	8.13	0.000	0.00	173.020
03-3	Junct	0.723	32.40	17.52	8.08	0.000	0.00	189.338
03-4	Junct	0.736	36.88	17.67	8.04	0.000	0.00	218.375
03-5	Junct	0.752	47.39	17.77	8.02	0.000	0.00	285.945
03-04A	Junct	0.723	32.40	17.52	8.08	0.000	0.00	189.338
03-OUT	Outlt	0.752	47.39	17.77	8.02	0.000	0.00	285.945

Conveyance Configuration Data

Run#	Node I.D. US	Node I.D. DS	Flowline Elev. US (ft)	Flowline Elev. DS (ft)	Shape #	Span (ft)	Rise (ft)	Length (ft)	Slope (%)	n value
1	03-1	03-2	598.08	597.24	Box 1	4.00	7.00	152.00	0.55	0.013
2	03-2	03-3	597.24	596.53	Box 1	4.00	7.00	129.00	0.55	0.013
3	03-3	03-04A	596.53	596.17	Box 1	4.00	7.00	65.00	0.55	0.013
4	03-04A	03-4	596.17	596.06	Box 1	4.00	7.00	29.00	0.37	0.013
5	03-4	03-5	596.06	595.86	Box 1	4.00	7.00	54.00	0.37	0.013
6	03-5	03-OUT	595.86	595.06	Box 1	4.00	7.00	214.00	0.37	0.013

Conveyance Hydraulic Computations. Tailwater = 603.240 (ft)

Run#	Hydraulic Gradeline US Elev (ft)	Hydraulic Gradeline DS Elev (ft)	Fr.Slope (%)	Depth Unif. (ft)	Depth Actual (ft)	Velocity Unif. (f/s)	Velocity Actual (f/s)	Q (cfs)	Cap (cfs)	Junc Loss (ft)
1	605.43	605.17	0.172	3.83	7.00	10.17	5.56	155.67	279.43	0.000
2	605.17	604.90	0.212	4.16	7.00	10.41	6.18	173.02	278.87	0.000
3	604.90	604.73	0.254	4.48	7.00	10.56	6.76	189.34	279.74	0.000
4	604.73	604.66	0.254	5.25	7.00	9.02	6.76	189.34	229.39	0.000
5	604.66	604.48	0.338	5.91	7.00	9.24	7.80	218.38	229.90	0.000
6	604.48	603.24	0.579	7.00	7.00	10.21	10.21	285.95	229.82	0.000

OUTPUT FOR ANALYSYS FREQUENCY of: 100 Years

Runoff Computation for Analysis Frequency.

ID	C Value	Area (acre)	Tc (min)	Tc Used (min)	Intensity (in/hr)	Supply Q (cfs)	Total Q (cfs)
03-1	0.691	27.48	17.06	17.06	8.96	0.000	170.227
	0.9	8.33	Pavement				
	0.65	16.00	Developed				
	0.35	3.15	Undeveloped				
03-2	0.9	2.53	12.70	12.70	10.37	0.000	23.622
	0.9	2.53	Pavement				
03-3	0.9	2.39	11.90	11.90	10.69	0.000	23.000
	0.9	2.39	Pavement				
03-4	0.83	4.48	12.18	12.18	10.58	0.000	39.337
	0.9	3.91	Pavement				
	0.35	0.57	Undeveloped				
03-5	0.809	10.51	12.97	12.97	10.27	0.000	87.329
	0.9	8.77	Pavement				
	0.35	1.74	Undeveloped				

Cumulative Junction Discharge Computations

Node I.D.	Node Type	Weighted C-Value	Cumulat. Dr.Area (acres)	Cumulat. Tc (min)	Intens. (in/hr)	User Supply Q cfs)	Additional Q in Node (cfs)	Total Disch. (cfs)
03-1	CircMh	0.691	27.48	17.06	8.96	0.000	0.00	170.227
03-2	Junct	0.709	30.01	17.30	8.89	0.000	0.00	189.216
03-3	Junct	0.723	32.40	17.51	8.84	0.000	0.00	207.067
03-4	Junct	0.736	36.88	17.66	8.80	0.000	0.00	238.830
03-5	Junct	0.752	47.39	17.76	8.77	0.000	0.00	312.721
03-04A	Junct	0.723	32.40	17.51	8.84	0.000	0.00	207.067
03-OUT	Outlt	0.752	47.39	17.76	8.77	0.000	0.00	312.721

Conveyance Configuration Data

Run#	Node I.D. US	Node I.D. DS	Flowline Elev. US (ft)	Flowline Elev. DS (ft)	Shape #	Span (ft)	Rise (ft)	Length (ft)	Slope (%)	n value
1	03-1	03-2	598.08	597.24	Box 1	4.00	7.00	152.00	0.55	0.013
2	03-2	03-3	597.24	596.53	Box 1	4.00	7.00	129.00	0.55	0.013
3	03-3	03-04A	596.53	596.17	Box 1	4.00	7.00	65.00	0.55	0.013
4	03-04A	03-4	596.17	596.06	Box 1	4.00	7.00	29.00	0.37	0.013
5	03-4	03-5	596.06	595.86	Box 1	4.00	7.00	54.00	0.37	0.013
6	03-5	03-OUT	595.86	595.06	Box 1	4.00	7.00	214.00	0.37	0.013

Conveyance Hydraulic Computations. Tailwater = 603.840 (ft)

Run#	Hydraulic Gradeline US Elev (ft)	Hydraulic Gradeline DS Elev (ft)	Fr.Slope (%)	Depth Unif. (ft)	Depth Actual (ft)	Velocity Unif. (f/s)	Velocity Actual (f/s)	Q (cfs)	Cap (cfs)	Junc Loss (ft)
1	606.46	606.15	0.205	4.10	7.00	10.38	6.08	170.23	279.43	0.000
2	606.15	605.82	0.253	4.48	7.00	10.55	6.76	189.22	278.87	0.000
3	605.82	605.63	0.303	4.81	7.00	10.76	7.40	207.07	279.74	0.000
4	605.63	605.54	0.303	5.69	7.00	9.10	7.40	207.07	229.39	0.000
5	605.54	605.32	0.404	6.45	7.00	9.25	8.53	238.83	229.90	0.000
6	605.32	603.84	0.692	7.00	7.00	11.17	11.17	312.72	229.82	0.000

==========END==========

NORMAL TERMINATION OF WINSTORM.

Warning Messages for current project:

Runoff Frequency of: 50 Years
Discharge decreased downstream node Id= 03-04A Previous intensity used.
Run# 6 Insufficient capacity.
Upstream hydraulic gradeline exceeds critical elevation at node Id= 03-5

Runoff Frequency of: 100 Years
Discharge decreased downstream node Id= 03-04A Previous intensity used.
Run# 6 Insufficient capacity.
Upstream hydraulic gradeline exceeds critical elevation at node Id= 03-5
Run# 5 Insufficient capacity.

ABBREVIATIONS:

USACE U.S. ARMY CORPS OF ENGINEERS
NRCS NATURAL RESOURCE CONSERVATION SERVICE
USGS U.S. GEOLOGIC SURVEY

NOTES:

1. NODE/LINK DESIGNATIONS FOR TRUNK ANALYSIS ONLY. FOR DETAILED STORM DRAIN COMPUTATIONS, SEE STORM DRAIN HYDRAULIC COMPUTATIONS.
2. DESIGN FREQUENCY IS 25 YR FOR FRONTAGE RD AND RAMPS, 50 YR FOR MAINLANES.
3. HYDRAULIC ANAYLSIS PERFORMED USING TxDOT WINSTORM COMPUTER PROGRAM.
4. TAILWATER ELEVATION SET TO WATER SURFACE ELEVATION ON BIG FOSSIL CREEK AT CROSS SECTION 56650.

STATE OF TEXAS
JAIME K. BENOLIEL
96693
LICENSED
PROFESSIONAL ENGINEER

Jaime K. Benoliel 7/9/12
H & H RESOURCES, INC (TBPE F-3678)

H & H RESOURCES
CIVIL ENGINEERS
TBPE REGISTRATION NO. F-3678

Texas Department of Transportation
© 2012

IH 35W FROM NORTH TARRANT PKWY TO IH 820

HYDRAULIC DATA SHEET
CULVERT 3
35W ML STA 1547+54.36

SHEET 1 OF 1

DESIGN	FED.RD. DIV.NO.	FEDERAL AID PROJECT NO.		HIGHWAY NO.
JKB	6	(SEE TITLE SHEET)		IH 35W
GRAPHICS	STATE	DISTRICT	COUNTY	SHEET NO.
CA	TEXAS	FTW	TARRANT	1153
CHECK	CONTROL	SECTION	JOB	
JKB	0014	16	255, ETC.	
CHECK				
JT				

FILENAME: S3BD*HDSW*01.dgn
DRAWING DATE: 7/13/2012

WinStorm (STORM DRAIN DESIGN) Version 3.05, Jan. 25, 2002
Run @ 4/26/2012 2:30:57 PM

PROJECT NAME : IH 35W S3B
JOB NUMBER : 0014-016-255
PROJECT DESCRIPTION : CULVERT 4: ℄ 35W ML STA 1561+34.47
DESIGN FREQUENCY : 50 Years
ANALYSYS FREQUENCY : 100 Years
MEASUREMENT UNITS: ENGLISH

OUTPUT FOR DESIGN FREQUENCY of: 50 Years

Runoff Computation for Design Frequency.

ID	C Value	Area (acre)	Tc (min)	Tc Used (min)	Intensity (in/hr)	Supply Q (cfs)	Total Q (cfs)
04-1	0.475	48.95	36.44	36.44	5.29	0.000	123.090
	0.9	2.04	Pavement				
	0.65	16.70	Developed				
	0.35	30.21	Undeveloped				
04-1A	0.791	6.74	21.89	21.89	7.16	0.000	38.181
	0.9	5.40	Pavement				
	0.35	1.34	Undeveloped				
04-1B	0.9	3.92	16.22	16.22	8.41	0.000	29.665
	0.9	3.92	Pavement				
04-2	0.9	3.50	16.96	16.96	8.22	0.000	25.888
	0.9	3.50	Pavement				
04-3	0.733	9.24	16.23	16.23	8.41	0.000	56.911
	0.9	6.43	Pavement				
	0.35	2.81	Undeveloped				
04-3A	0.79	10.36	14.00	14.00	9.04	0.000	73.983
	0.9	8.28	Pavement				
	0.35	2.08	Undeveloped				

Cumulative Junction Discharge Computations

Node I.D.	Node Type	Weighted C-Value	Cumulat. Dr.Area (acres)	Cumulat. Tc (min)	Intens. (in/hr)	User Supply Q cfs)	Additional Q in Node (cfs)	Total Disch. (cfs)
04-1	JnctBx	0.475	48.95	36.44	5.29	0.000	0.00	123.090
04-1A	BoxMh	0.513	55.69	36.55	5.28	0.000	0.00	150.989
04-1B	BoxMh	0.539	59.61	36.71	5.27	0.000	0.00	169.168
04-2	BoxMh	0.559	63.11	36.95	5.25	0.000	0.00	185.008
04-3	Junct	0.581	72.35	37.17	5.23	0.000	0.00	219.693
04-3A	BoxMh	0.607	82.71	37.18	5.22	0.000	0.00	262.363
04-3B	JnctBx	0.607	82.71	37.18	5.22	0.000	0.00	262.363
04-OUT	Outlt	0.607	82.71	37.18	5.22	0.000	0.00	262.363

Conveyance Configuration Data

Run#	Node I.D. US	Node I.D. DS	Flowline Elev. US (ft)	Flowline Elev. DS (ft)	Shape #	Span (ft)	Rise (ft)	Length (ft)	Slope (%)	n value
1	04-1	04-1A	616.23	615.97	Circ 2	0.00	4.25	56.00	0.46	0.013
2	04-1A	04-1B	615.97	615.60	Circ 2	0.00	4.25	80.00	0.46	0.013
3	04-1B	04-2	615.60	615.02	Circ 2	0.00	4.25	125.00	0.46	0.013
4	04-2	04-3	615.02	614.49	Circ 2	0.00	4.25	118.00	0.45	0.013
5	04-3	04-3A	614.49	610.99	Circ 1	0.00	4.00	36.00	9.78	0.013
6	04-3A	04-3B	610.99	603.39	Circ 1	0.00	4.00	78.00	9.78	0.013
7	04-3B	04-OUT	603.39	603.39	Circ 1	0.00	4.00	20.00	0.00	0.013

Conveyance Hydraulic Computations. Tailwater = 609.710 (ft)

Run#	Hydraulic Gradeline US Elev (ft)	Hydraulic Gradeline DS Elev (ft)	Fr.Slope (%)	Depth Unif. (ft)	Depth Actual (ft)	Velocity Unif. (f/s)	Velocity Actual (f/s)	Q (cfs)	Cap (cfs)	Junc Loss (ft)
1*	618.57	618.49	0.133	2.22	2.52	8.19	7.01	123.09	230.13	0.000
2*	618.49	618.32	0.200	2.52	2.72	8.60	7.86	150.99	229.69	0.000
3*	618.32	617.94	0.251	2.72	2.92	8.81	8.13	169.17	230.06	0.000
4	617.94	617.36	0.300	2.92	2.92	8.90	8.90	185.01	226.35	0.000
5*	617.29	614.93	2.339	1.97	3.95	35.54	17.53	219.69	449.34	0.000
6*	614.93	610.38	3.335	2.20	4.00	37.10	20.88	262.36	449.06	0.000
7	610.38	609.71	3.335	4.00	4.00	20.88	20.88	262.36	32.12	0.000

OUTPUT FOR ANALYSYS FREQUENCY of: 100 Years

Runoff Computation for Analysis Frequency.

ID	C Value	Area (acre)	Tc (min)	Tc Used (min)	Intensity (in/hr)	Supply Q (cfs)	Total Q (cfs)
04-1	0.475	48.95	36.44	36.44	5.77	0.000	134.325
	0.9	2.04	Pavement				
	0.65	16.70	Developed				
	0.35	30.21	Undeveloped				
04-1A	0.791	6.74	21.89	21.89	7.83	0.000	41.708
	0.9	5.40	Pavement				
	0.35	1.34	Undeveloped				
04-1B	0.9	3.92	16.22	16.22	9.20	0.000	32.447
	0.9	3.92	Pavement				
04-2	0.9	3.50	16.96	16.96	8.99	0.000	28.309
	0.9	3.50	Pavement				
04-3	0.733	9.24	16.23	16.23	9.19	0.000	62.248
	0.9	6.43	Pavement				
	0.35	2.81	Undeveloped				
04-3A	0.79	10.36	14.00	14.00	9.90	0.000	80.988
	0.9	8.28	Pavement				
	0.35	2.08	Undeveloped				

Cumulative Junction Discharge Computations

Node I.D.	Node Type	Weighted C-Value	Cumulat. Dr.Area (acres)	Cumulat. Tc (min)	Intens. (in/hr)	User Supply Q cfs)	Additional Q in Node (cfs)	Total Disch. (cfs)
04-1	JnctBx	0.475	48.95	36.44	5.77	0.000	0.00	134.325
04-1A	BoxMh	0.513	55.69	36.55	5.76	0.000	0.00	164.780
04-1B	BoxMh	0.539	59.61	36.70	5.75	0.000	0.00	184.632
04-2	BoxMh	0.559	63.11	36.93	5.73	0.000	0.00	201.935
04-3	Junct	0.581	72.35	37.15	5.70	0.000	0.00	239.808
04-3A	BoxMh	0.607	82.71	37.17	5.70	0.000	0.00	286.386
04-3B	JnctBx	0.607	82.71	37.17	5.70	0.000	0.00	286.386
04-OUT	Outlt	0.607	82.71	37.17	5.70	0.000	0.00	286.386

Conveyance Configuration Data

Run#	Node I.D. US	Node I.D. DS	Flowline Elev. US (ft)	Flowline Elev. DS (ft)	Shape #	Span (ft)	Rise (ft)	Length (ft)	Slope (%)	n value
1	04-1	04-1A	616.23	615.97	Circ 2	0.00	4.25	56.00	0.46	0.013
2	04-1A	04-1B	615.97	615.60	Circ 2	0.00	4.25	80.00	0.46	0.013
3	04-1B	04-2	615.60	615.02	Circ 2	0.00	4.25	125.00	0.46	0.013
4	04-2	04-3	615.02	614.49	Circ 2	0.00	4.25	118.00	0.45	0.013
5	04-3	04-3A	614.49	610.99	Circ 1	0.00	4.00	36.00	9.78	0.013
6	04-3A	04-3B	610.99	603.39	Circ 1	0.00	4.00	78.00	9.78	0.013
7	04-3B	04-OUT	603.39	603.39	Circ 1	0.00	4.00	20.00	0.00	0.013

Conveyance Hydraulic Computations. Tailwater = 614.710 (ft)

Run#	Hydraulic Gradeline US Elev (ft)	Hydraulic Gradeline DS Elev (ft)	Fr.Slope (%)	Depth Unif. (ft)	Depth Actual (ft)	Velocity Unif. (f/s)	Velocity Actual (f/s)	Q (cfs)	Cap (cfs)	Junc Loss (ft)
1*	620.68	620.59	0.158	2.32	4.25	8.46	4.73	134.33	230.13	0.000
2*	620.59	620.40	0.238	2.66	4.25	8.83	5.81	164.78	229.69	0.000
3	620.40	620.03	0.299	2.89	4.25	8.99	6.51	184.63	230.06	0.000
4	620.03	619.61	0.357	3.12	4.25	9.04	7.12	201.94	226.35	0.000
5*	619.61	618.60	2.786	2.08	4.00	36.34	19.08	239.81	449.34	0.000
6*	618.60	615.50	3.974	2.32	4.00	37.89	22.79	286.39	449.06	0.000
7	615.50	614.71	3.974	4.00	4.00	22.79	22.79	286.39	32.12	0.000

END

* Super critical flow.

NORMAL TERMINATION OF WINSTORM.

Warning Messages for current project:

Runoff Frequency of: 50 Years
Decreasing conduit size @ downstream Run# 5
Discharge decreased downstream node Id= 04-3B Previous intensity used.
Run# 7 Insufficient capacity.

Runoff Frequency of: 100 Years
Decreasing conduit size @ downstream Run# 5
Discharge decreased downstream node Id= 04-3B Previous intensity used.
Run# 7 Insufficient capacity.

ABBREVIATIONS:

USACE U.S. ARMY CORPS OF ENGINEERS
NRCS NATURAL RESOURCE CONSERVATION SERVICE
USGS U.S. GEOLOGIC SURVEY

NOTES:

1. NODE/LINK DESIGNATIONS FOR TRUNK ANALYSIS ONLY. FOR DETAILED STORM DRAIN COMPUTATIONS, SEE STORM DRAIN HYDRAULIC COMPUTATIONS.
2. DESIGN FREQUENCY IS 25 YR FOR FRONTAGE RD AND RAMPS, 50 YR FOR MAINLANES.
3. HYDRAULIC ANAYLSIS PERFORMED USING TxDOT WINSTORM COMPUTER PROGRAM.
4. TAILWATER ELEVATION BASED ON EXISTING POND DATA, AS FOLLOWS:
   50-YR = POND OUTLET STRUCTURE WEIR CREST
   100-YR = 5' ABOVE WEIR CREST PER AS-BUILT PLANS
5. EXISTING AND PROPOSED SYSTEM CONSISTS OF PARALLEL 48" AND 60" RCP. SYSTEM MODELED AS 2-51" RCP TO APPROXIMATE EQUAL CONVEYANCE.

STATE OF TEXAS
JAIME K. BENOLIEL
96693
LICENSED
PROFESSIONAL ENGINEER

Jaime K. Benoliel 7/9/12

H & H RESOURCES, INC (TBPE F-3678)

H & H RESOURCES
CIVIL ENGINEERS
TBPE REGISTRATION NO. F-3678

Texas Department of Transportation
© 2012

IH 35W FROM NORTH TARRANT PKWY TO IH 820

HYDRAULIC DATA SHEET
CULVERT 4
35W ML STA 1561+34.47

SHEET 1 OF 1

DESIGN	FED. RD. DIV. NO.	FEDERAL AID PROJECT NO.		HIGHWAY NO.
JKB	6	(SEE TITLE SHEET)		IH 35W
GRAPHICS CA	STATE	DISTRICT	COUNTY	SHEET NO.
CHECK JKB	TEXAS	FTW	TARRANT	1154
CHECK JT	CONTROL 0014	SECTION 16	JOB 255, ETC.	

FILENAME: S3BD*HDSW*02.dgn

DRAWING DATE: 7/13/2012

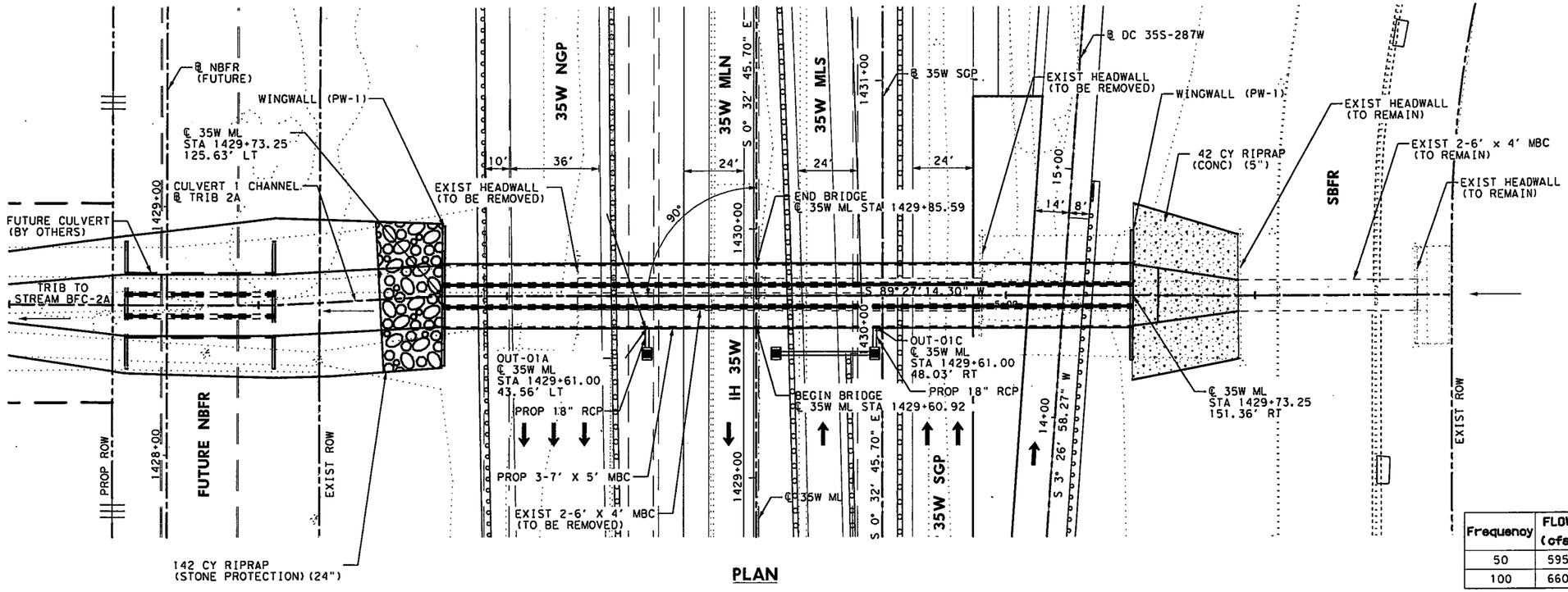

PLAN

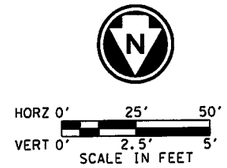

NOTES:

1. ALL STATIONS SHOWN BASED ON ℄ 35W ML UNLESS OTHERWISE NOTED.
2. DESIGN FREQUENCY 50-YEAR.
3. HYDROLOGIC COMPUTATIONS BY SNYDERS UH METHOD. SEE SHEET 1139
4. FOR COMPLETE HYDRAULIC DATA SEE SHEET 1140.
5. SEE SHEETS 1065 AND 1066 FOR PROPOSED CHANNEL LAYOUT.

Frequency	FLOW (cfs)	VEL (ft/sec)	Dc (ft)	Dn (ft)	TW (ft)	HWa (ft)	HW (ft)
50	595	5.67	2.90	2.69	658.66	660.00	659.72
100	660	6.28	3.13	3.96	659.30	663.53	660.66

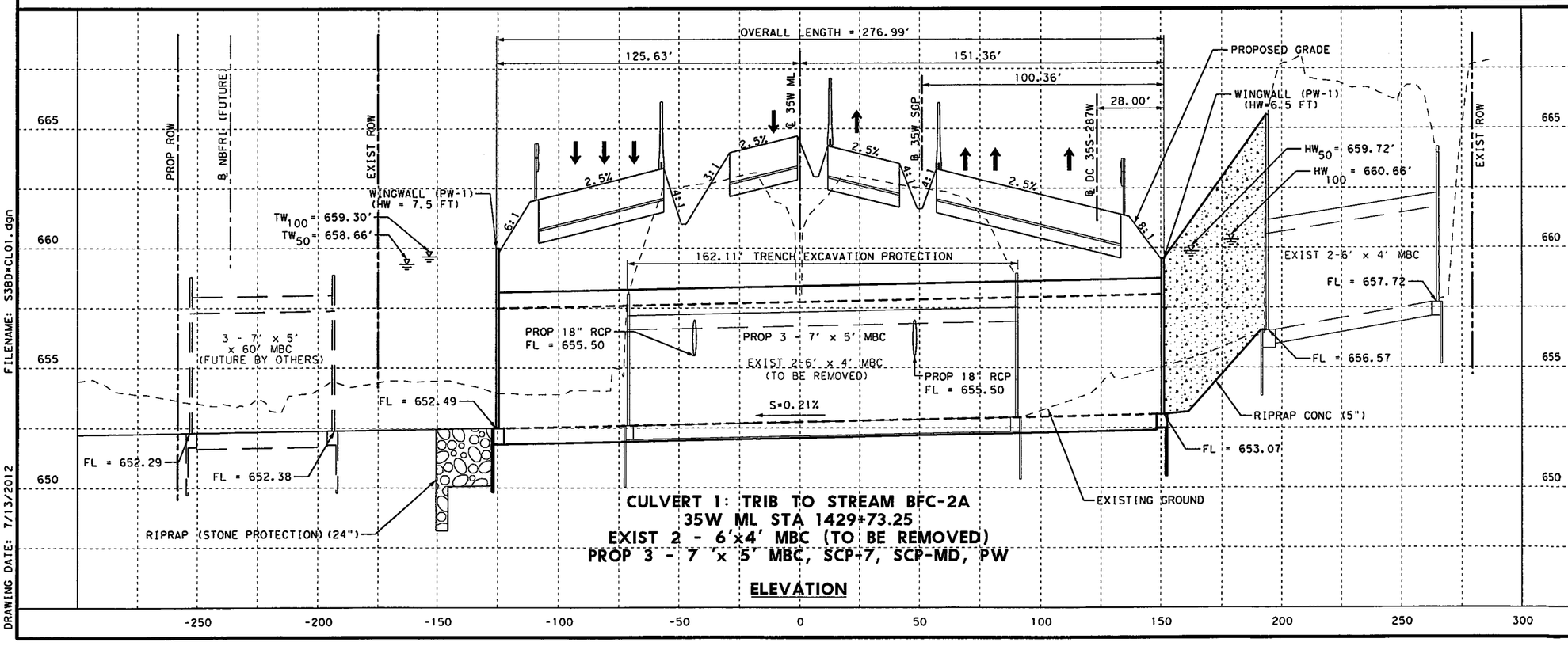

CULVERT 1: TRIB TO STREAM BFC-2A
35W ML STA 1429+73.25
EXIST 2 - 6'x4' MBC (TO BE REMOVED)
PROP 3 - 7 'x 5' MBC, SCP-7, SCP-MD, PW

ELEVATION

STATE OF TEXAS
JOHN A. TERRY
51729
REGISTERED PROFESSIONAL ENGINEER

7-5-12

H & H RESOURCES, INC (TBPE F-3678)

NBI#
PROP 02-220-0-14-16-XXX

H & H RESOURCES
CIVIL ENGINEERS
TBPE REGISTRATION NO. F-3678

Texas Department of Transportation
© 2012

IH 35W FROM NORTH TARRANT PKWY TO IH 820

CULVERT 1 LAYOUT
TRIB TO STREAM BFC-2A
IH 35W MAIN LANES

SCALE: 1" = 50' H, 1" = 5' V — SHEET 1 OF 1

DESIGN	FED. RD. DIV. NO.	FEDERAL AID PROJECT NO.		HIGHWAY NO.
JKB	6	(SEE TITLE SHEET)		IH 35W
GRAPHICS CA	STATE	DISTRICT	COUNTY	SHEET NO.
CHECK JKB	TEXAS	FTW	TARRANT	1155
CHECK JT	CONTROL 0014	SECTION 16	JOB 255, ETC.	

FILENAME: S3BD*CL01.dgn
DRAWING DATE: 7/13/2012

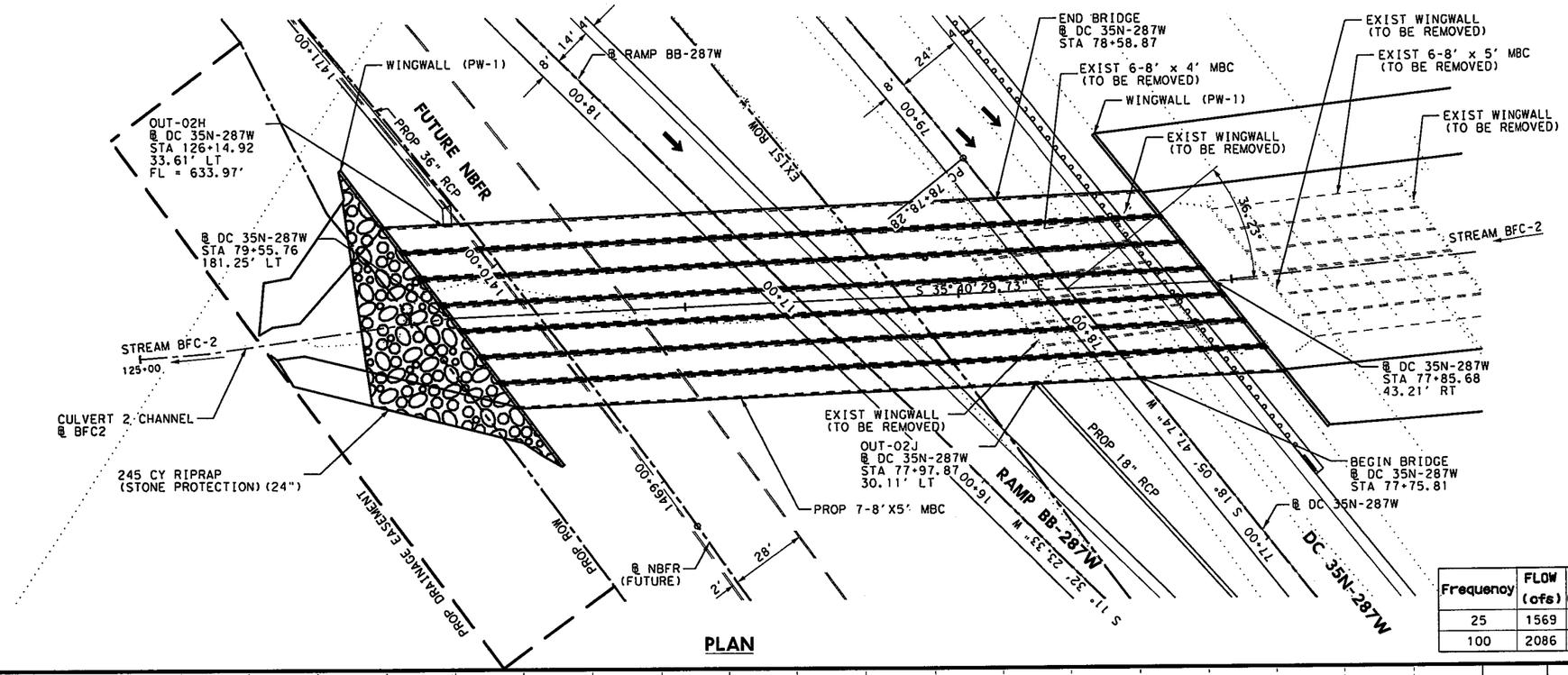

PLAN

NOTES:

1. ALL STATIONS SHOWN BASED ON @ DC 35N-287W UNLESS OTHERWISE NOTED.
2. DESIGN FREQUENCY 25-YEAR.
3. HYDROLOGIC COMPUTATIONS BY SNYDER'S UH METHOD. SEE SHEET 1141.
4. FOR COMPLETE HYDRAULIC DATA SEE SHEET 1144.
5. SEE SHEETS 1167-1170 FOR PROPOSED CHANNEL LAYOUT

Frequency	FLOW (cfs)	VEL (ft/sec)	Do (ft)	Dn (ft)	TW (ft)	HWa (ft)	HW (ft)
25	1569	7.16	2.90	2.69	638.02	639.77	639.05
100	2086	7.45	3.51	3.31	638.56	640.89	640.31

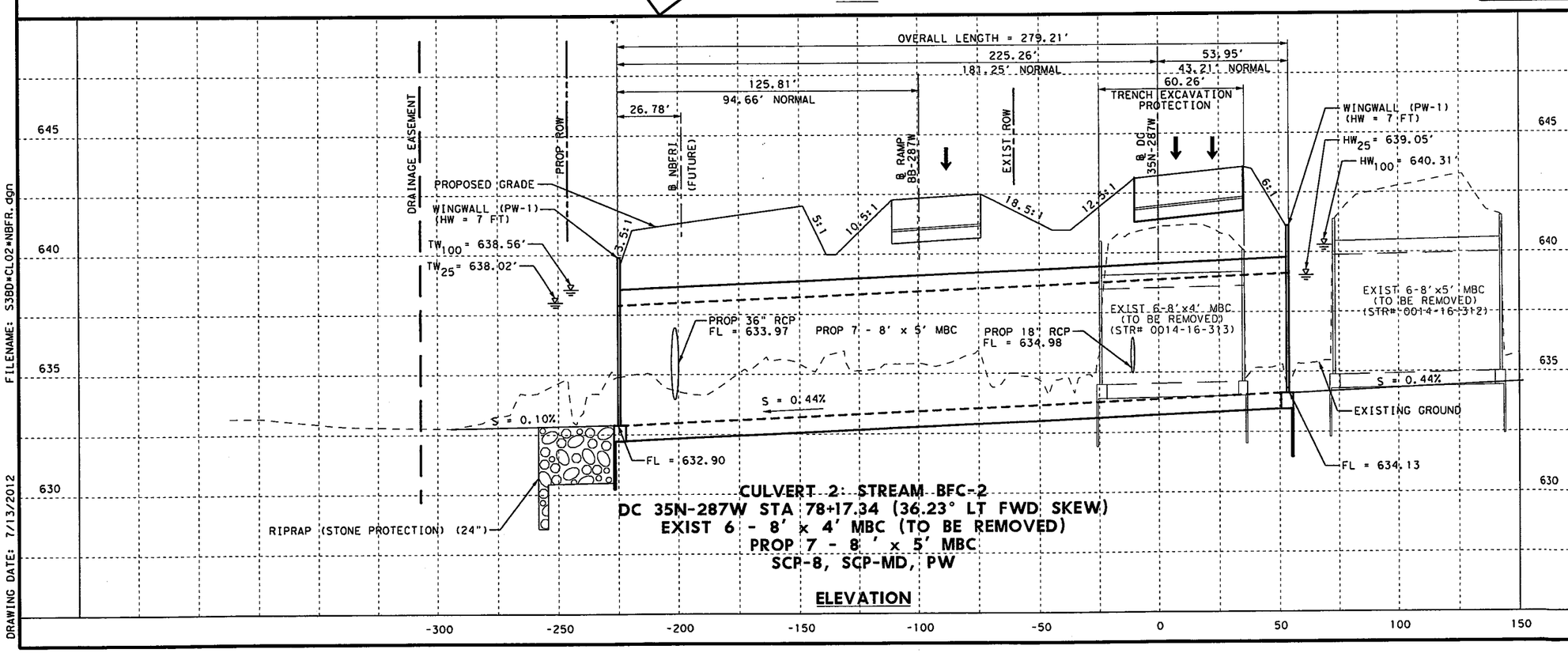

CULVERT 2: STREAM BFC-2
DC 35N-287W STA 78+17.34 (36.23° LT FWD SKEW)
EXIST 6 - 8' x 4' MBC (TO BE REMOVED)
PROP 7 - 8' x 5' MBC
SCP-8, SCP-MD, PW

ELEVATION

STATE OF TEXAS
JOHN A. TERRY
51729
REGISTERED PROFESSIONAL ENGINEER

7-5-12

H & H RESOURCES, INC (TBPE F-3678)

NBI#
EXIST 02-220-0-0014-16-312
EXIST 02-220-0-14-16-313
PROP 02-220-0-14-16-XXX

H & H RESOURCES
CIVIL ENGINEERS
TBPE REGISTRATION NO. F-3678

Texas Department of Transportation
© 2012

IH 35W FROM NORTH TARRANT PKWY TO IH 820

CULVERT 2 LAYOUT
STREAM BFC-2
IH 35W DC 35N-287W

SCALE: 1" = 50' H, 1" = 5' V — SHEET 1 OF 4

DESIGN	FED. RD. DIV. NO.	FEDERAL AID PROJECT NO.		HIGHWAY NO.
JKB	6	(SEE TITLE SHEET)		IH 35W
GRAPHICS CA	STATE	DISTRICT	COUNTY	SHEET NO.
CHECK JKB	TEXAS	FTW	TARRANT	1156
CHECK JT	CONTROL 0014	SECTION 16	JOB 255, ETC.	

FILENAME: S3BD*CL02*NBFR.dgn
DRAWING DATE: 7/13/2012

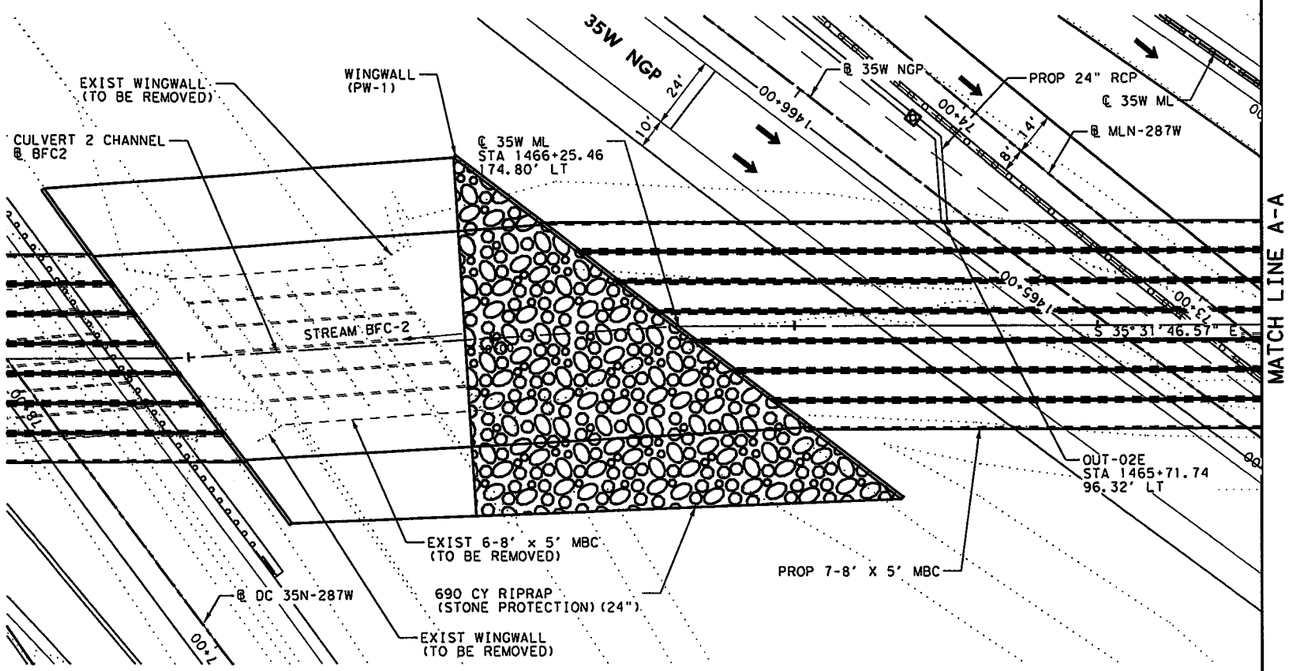

PLAN

MATCH LINE A-A

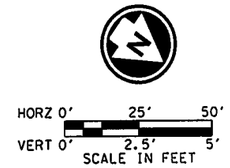

NOTES:

1. ALL STATIONS SHOWN BASED ON ℄ 35W ML UNLESS OTHERWISE NOTED.
2. DESIGN FREQUENCY 50-YEAR.
3. HYDROLOGIC COMPUTATIONS BY SNYDER'S UH METHOD. SEE SHEET 1141.
4. FOR COMPLETE HYDRAULIC DATA SEE SHEET 1143.
5. SEE SHEETS 1167-1170 FOR PROPOSED CHANNEL LAYOUT.

Frequency	FLOW (cfs)	VEL (ft/sec)	Do (ft)	Dn (ft)	TW (ft)	HWa (ft)	HW (ft)
50	1826	10.16	3.21	3.00	640.19	645.20	642.80
100	2086	8.87	3.51	3.30	640.80	646.71	643.16

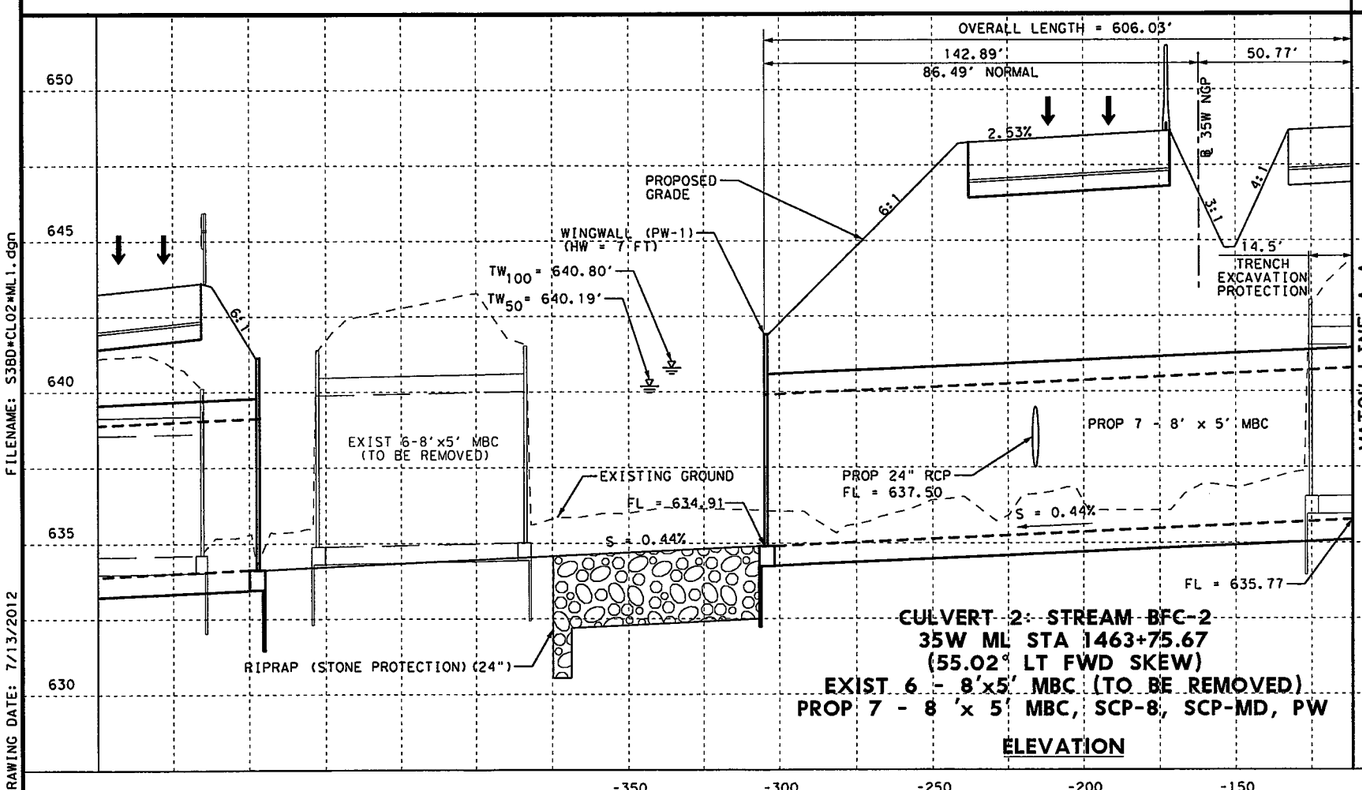

CULVERT 2: STREAM BFC-2
35W ML STA 1463+75.67
(55.02° LT FWD SKEW)
EXIST 6 - 8'x5' MBC (TO BE REMOVED)
PROP 7 - 8 'x 5' MBC, SCP-8, SCP-MD, PW

ELEVATION

MATCH LINE A-A

STATE OF TEXAS
JOHN A. TERRY
51729
REGISTERED PROFESSIONAL ENGINEER

7-5-12

H & H RESOURCES, INC (TBPE F-3678)

NBI#
EXIST 02-220-0-14-16-311
PROP 02-220-0-14-16-XXX

H & H RESOURCES
CIVIL ENGINEERS
TBPE REGISTRATION NO. F-3678

Texas Department of Transportation
© 2012

IH 35W FROM NORTH TARRANT PKWY TO IH 820

CULVERT 2 LAYOUT
STREAM BFC-2
IH 35W MAIN LANES

SCALE: 1" = 50' H, 1" = 5' V — SHEET 2 OF 4

DESIGN	FED.RD. DIV.NO.	FEDERAL AID PROJECT NO.		HIGHWAY NO.
JKB	6	(SEE TITLE SHEET)		IH 35W
GRAPHICS CA	STATE	DISTRICT	COUNTY	SHEET NO.
CHECK JKB	TEXAS	FTW	TARRANT	1157
CHECK JT	CONTROL	SECTION	JOB	
	0014	16	255, ETC.	

FILENAME: S38D*CL02*ML1.dgn

DRAWING DATE: 7/13/2012

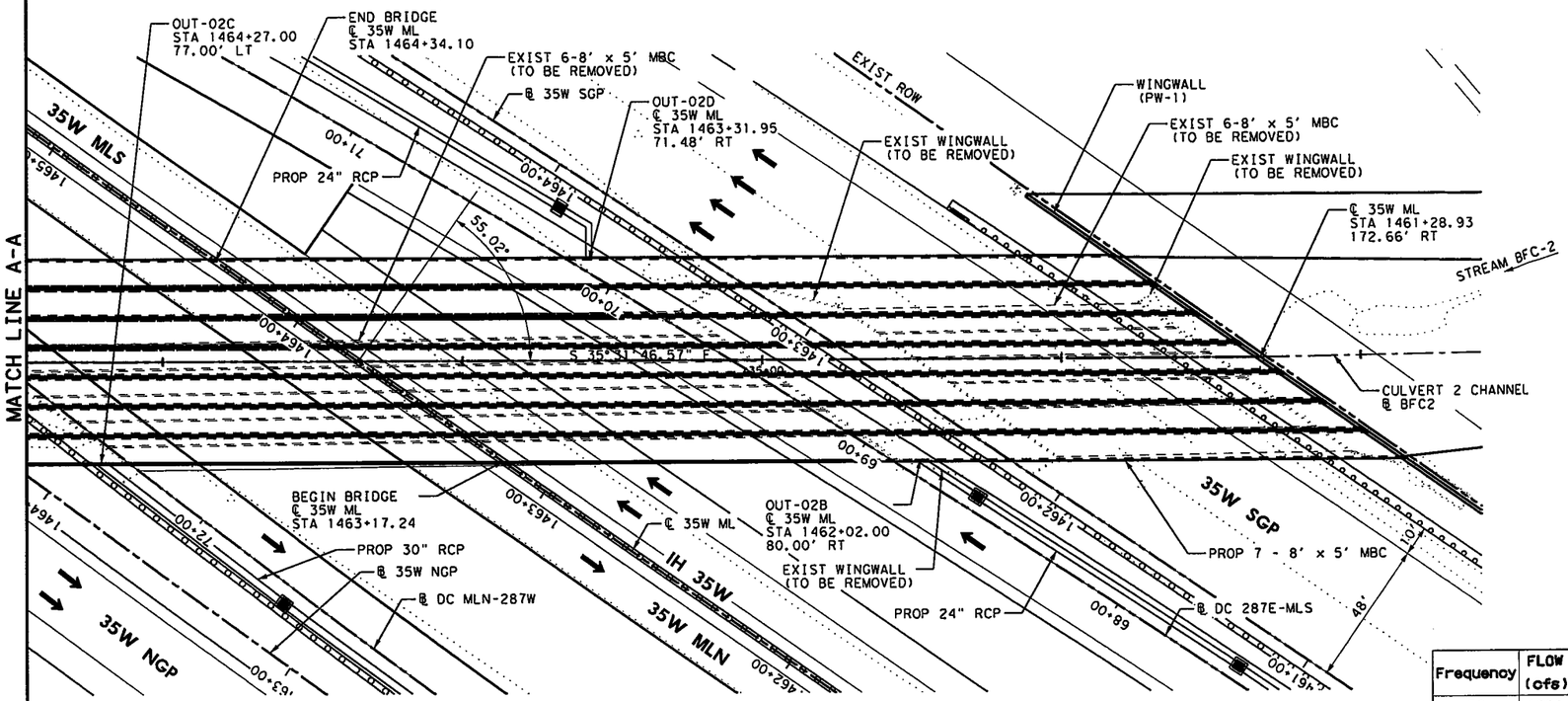

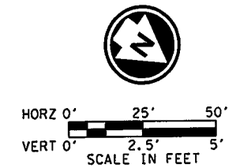

NOTES:

1. ALL STATIONS SHOWN BASED ON ℄ 35W ML UNLESS OTHERWISE NOTED.
2. DESIGN FREQUENCY 50-YEAR.
3. HYDROLOGIC COMPUTATIONS BY SNYDER'S UH METHOD. SEE SHEET 1141.
4. FOR COMPLETE HYDRAULIC DATA SEE SHEET 1143.
5. SEE SHEETS 1167-1170 FOR PROPOSED CHANNEL LAYOUT.

Frequency	FLOW (cfs)	VEL (ft/sec)	Dc (ft)	Dn (ft)	TW (ft)	HWa (ft)	HW (ft)
50	1826	10.16	3.21	3.00	640.19	645.20	642.80
100	2086	8.87	3.51	3.30	640.80	646.71	643.16

PLAN

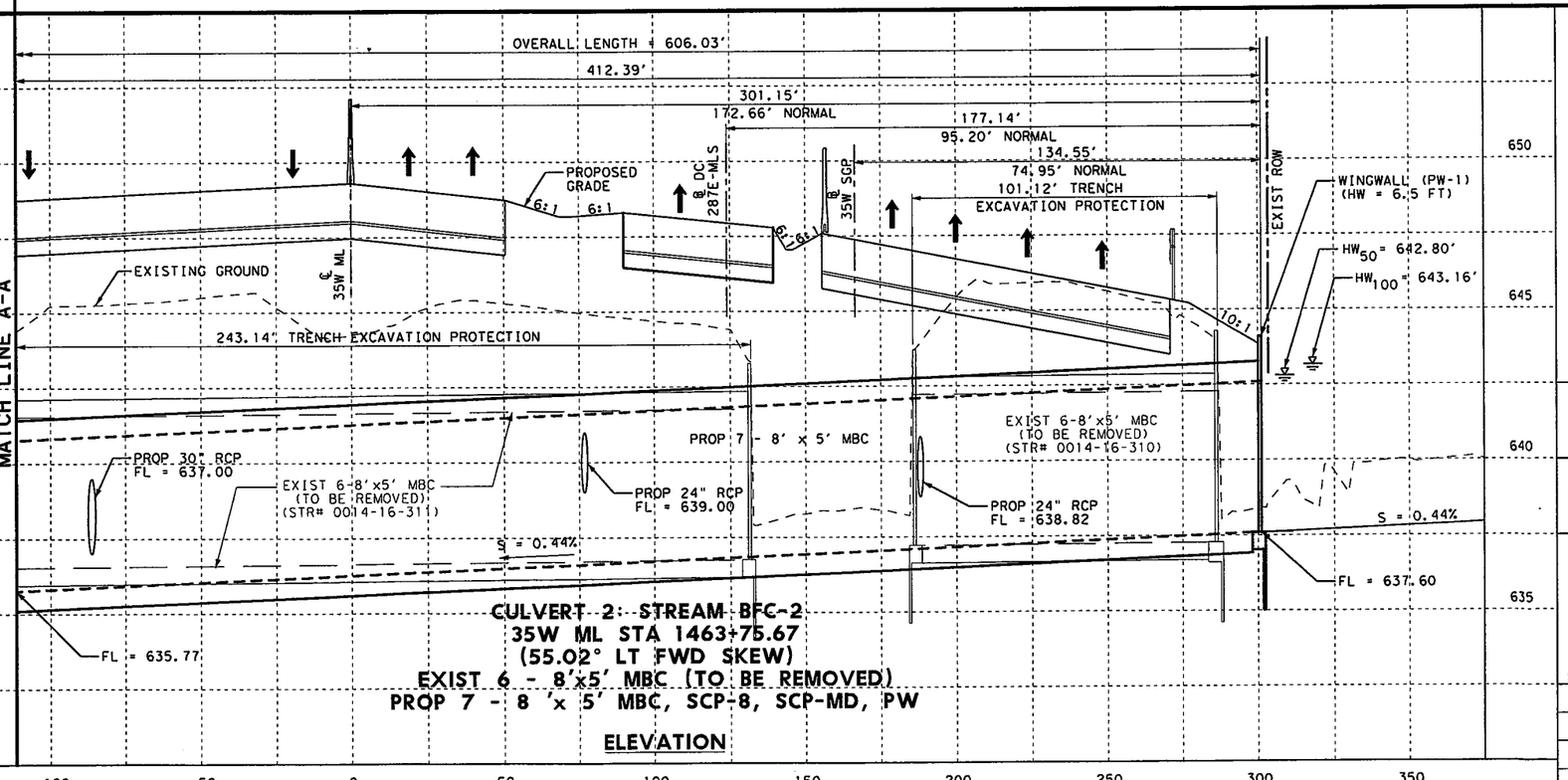

CULVERT 2: STREAM BFC-2
35W ML STA 1463+75.67
(55.02° LT FWD SKEW)
EXIST 6 - 8'x5' MBC (TO BE REMOVED)
PROP 7 - 8 'x 5' MBC, SCP-8, SCP-MD, PW

ELEVATION

STATE OF TEXAS
JOHN A. TERRY
51729
REGISTERED PROFESSIONAL ENGINEER

7-5-12

H & H RESOURCES, INC (TBPE F-3678)

NBI#
EXIST 02-220-0-0014-16-311
PROP 02-220-0-0014-16-XXX

H & H RESOURCES
CIVIL ENGINEERS
TBPE REGISTRATION NO. F-3678

Texas Department of Transportation
© 2012

IH 35W FROM NORTH TARRANT PKWY TO IH 820

CULVERT 2 LAYOUT
STREAM BFC-2
IH 35W MAIN LANES

SCALE: 1" = 50' H, 1" = 5' V — SHEET 3 OF 4

DESIGN	FED. RD. DIV. NO.	FEDERAL AID PROJECT NO.		HIGHWAY NO.
JKB	6	(SEE TITLE SHEET)		IH 35W
GRAPHICS	STATE	DISTRICT	COUNTY	SHEET NO.
CA	TEXAS	FTW	TARRANT	1158
CHECK	CONTROL	SECTION	JOB	
JKB	0014	16	255, ETC.	
CHECK				
JT				

FILENAME: S3BD*CL02*ML2.dgn
DRAWING DATE: 7/13/2012

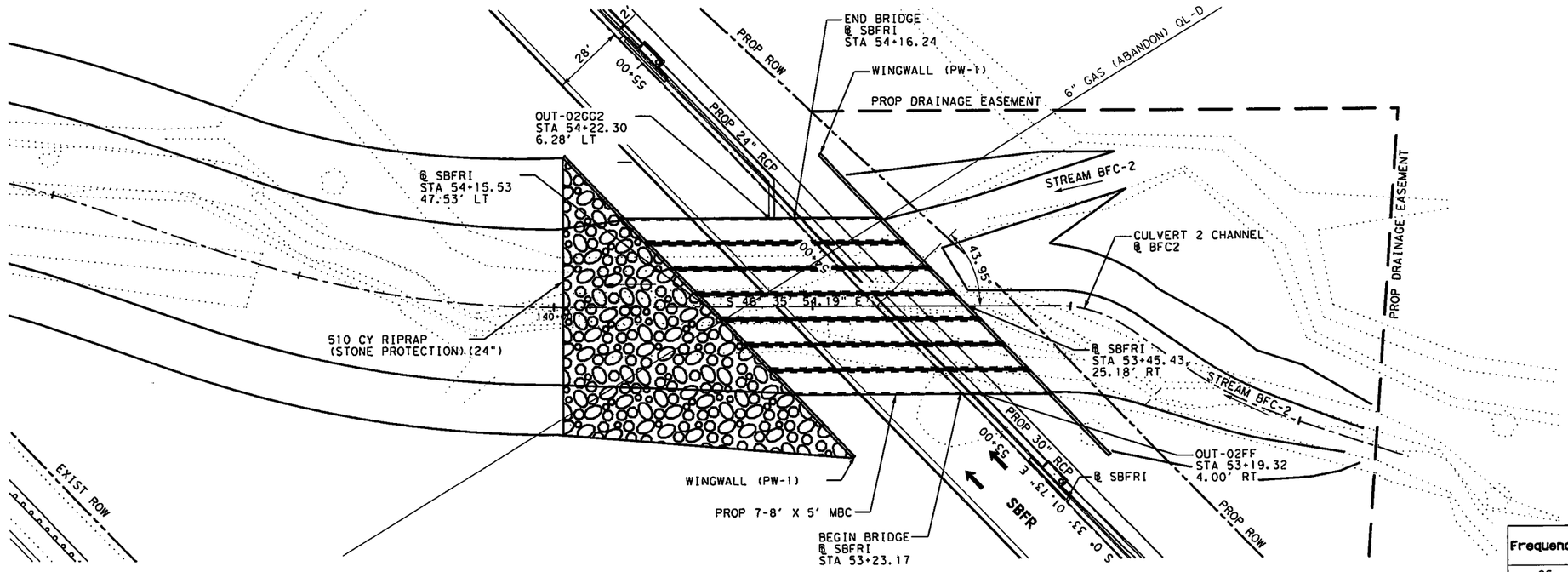

PLAN

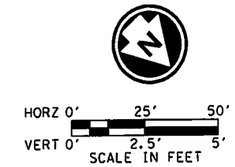

NOTES:

1. ALL STATIONS SHOWN BASED ON @ SBFRI UNLESS OTHERWISE NOTED.
2. DESIGN FREQUENCY 25-YEAR.
3. HYDROLOGIC COMPUTATIONS BY SNYDERS UH METHOD. SEE SHEET 1141.
4. FOR COMPLETE HYDRAULIC DATA SEE SHEET 1142.
5. SEE SHEETS 1167-1170 FOR PROPOSED CHANNEL LAYOUT.

Frequency	FLOW (cfs)	VEL (ft/sec)	Dc (ft)	Dn (ft)	TW (ft)	HWa (ft)	HW (ft)
25	1569	6.98	2.90	2.68	643.78	646.24	644.53
100	2086	7.68	3.51	3.29	644.43	646.90	645.53

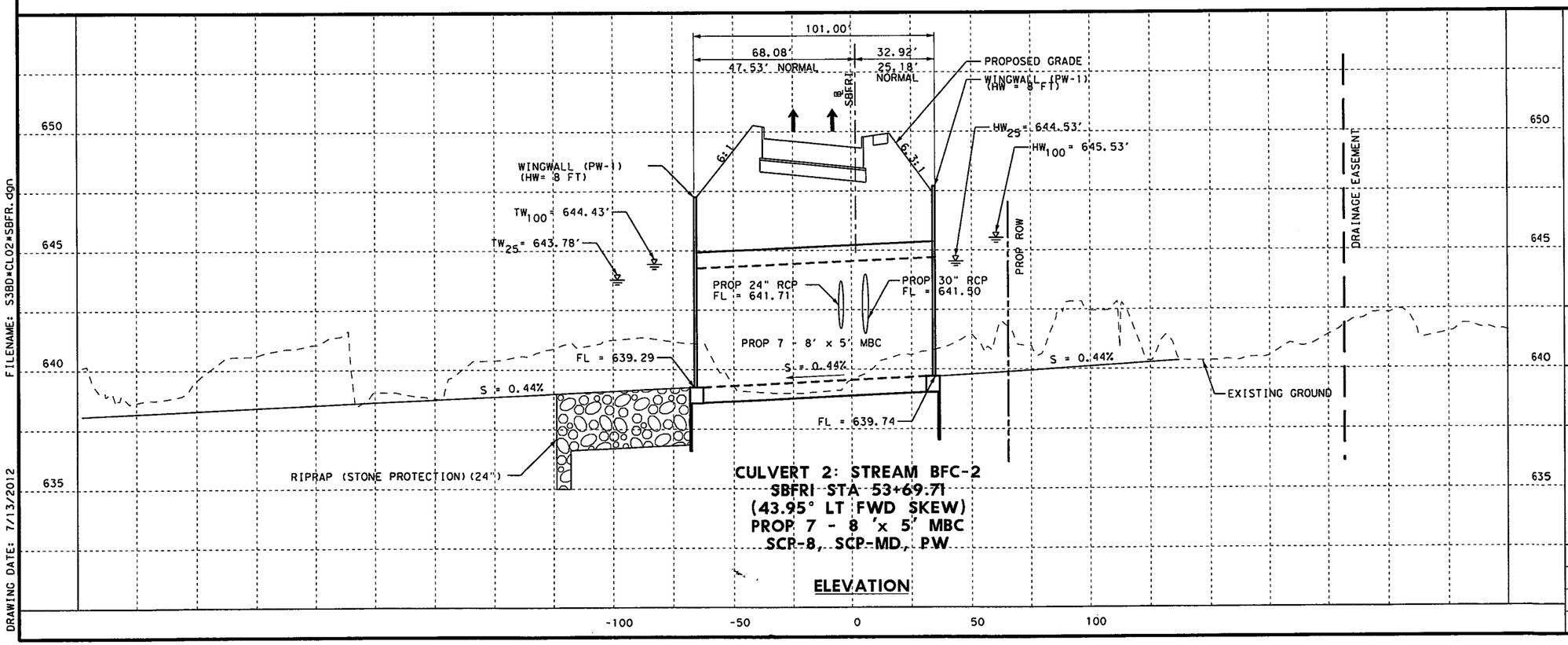

CULVERT 2: STREAM BFC-2
SBFRI STA 53+69.71
(43.95° LT FWD SKEW)
PROP 7 - 8 'x 5' MBC
SCP-8, SCP-MD, PW

ELEVATION

FILENAME: S3BD*CL02*SBFR.dgn

DRAWING DATE: 7/13/2012

STATE OF TEXAS
JOHN A. TERRY
51729
REGISTERED PROFESSIONAL ENGINEER

7-5-12

H & H RESOURCES, INC (TBPE F-3678)

NBI #
EXIST 02-220-0-0014-16-310
PROP 02-220-0-0014-16-XXX

H & H RESOURCES
CIVIL ENGINEERS
TBPE REGISTRATION NUMBER F-3678

Texas Department of Transportation
© 2012

IH 35W FROM NORTH TARRANT PKWY TO IH 820

CULVERT 2 LAYOUT
STREAM BFC-2
IH 35W SB FRONTAGE ROAD

SCALE: 1" = 50' H, 1" = 5' V — SHEET 4 OF 4

DESIGN	FED. RD. DIV. NO.	FEDERAL AID PROJECT NO.		HIGHWAY NO.
JKB	6	(SEE TITLE SHEET)		IH 35W
GRAPHICS	STATE	DISTRICT	COUNTY	SHEET NO.
CA	TEXAS	FTW	TARRANT	
CHECK JKB	CONTROL	SECTION	JOB	1159
CHECK JT	0014	16	255, ETC.	

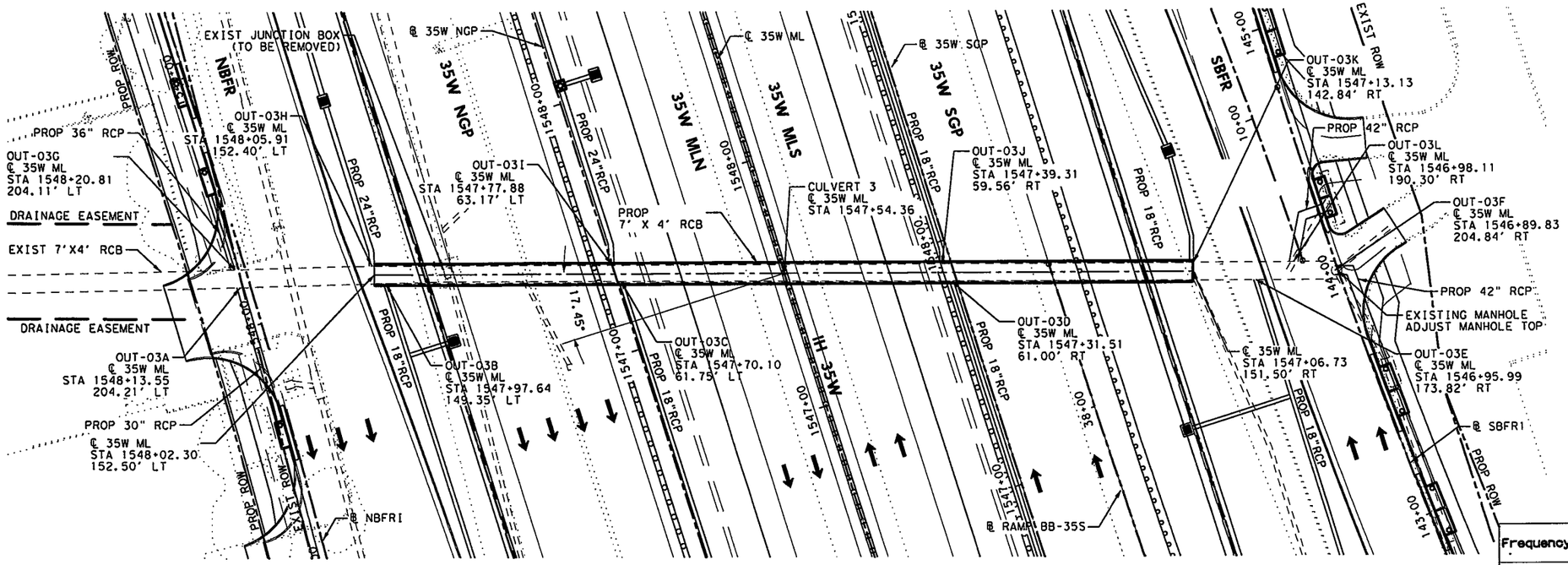

PLAN

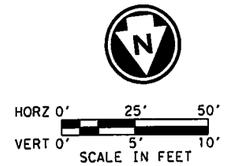

NOTES:

1. ALL STATIONS SHOWN BASED ON ℄ 35W ML UNLESS OTHERWISE NOTED.
2. EXACT LOCATION AND ELEVATION OF EXISTING 7' X 4' CONCRETE BOX TO BE VERIFIED BY THE CONTRACTOR.
3. DESIGN FREQUENCY 50-YEAR.
4. HYDROLOGIC COMPUTATIONS BY RATIONAL METHOD. SEE SHEET 1138.
5. FOR COMPLETE HYDRAULIC DATA SEE SHEET 1153.
6. SEE DRAINAGE PLAN & PROFILE SHEETS FOR LATERAL INFORMATION.
7. SEE TEMP SPL. SHORING LAYOUT AND DETAILS FOR ADDITIONAL INFORMATION.

Frequency	FLOW (cfs)	VEL (ft/sec)	Do (ft)	Dn (ft)	TW (ft)	HWa (ft)	HW (ft)
50	189	6.76	7.00	5.25	604.66	608.76	605.17
100	207	7.40	7.00	5.69	605.54	608.76	606.15

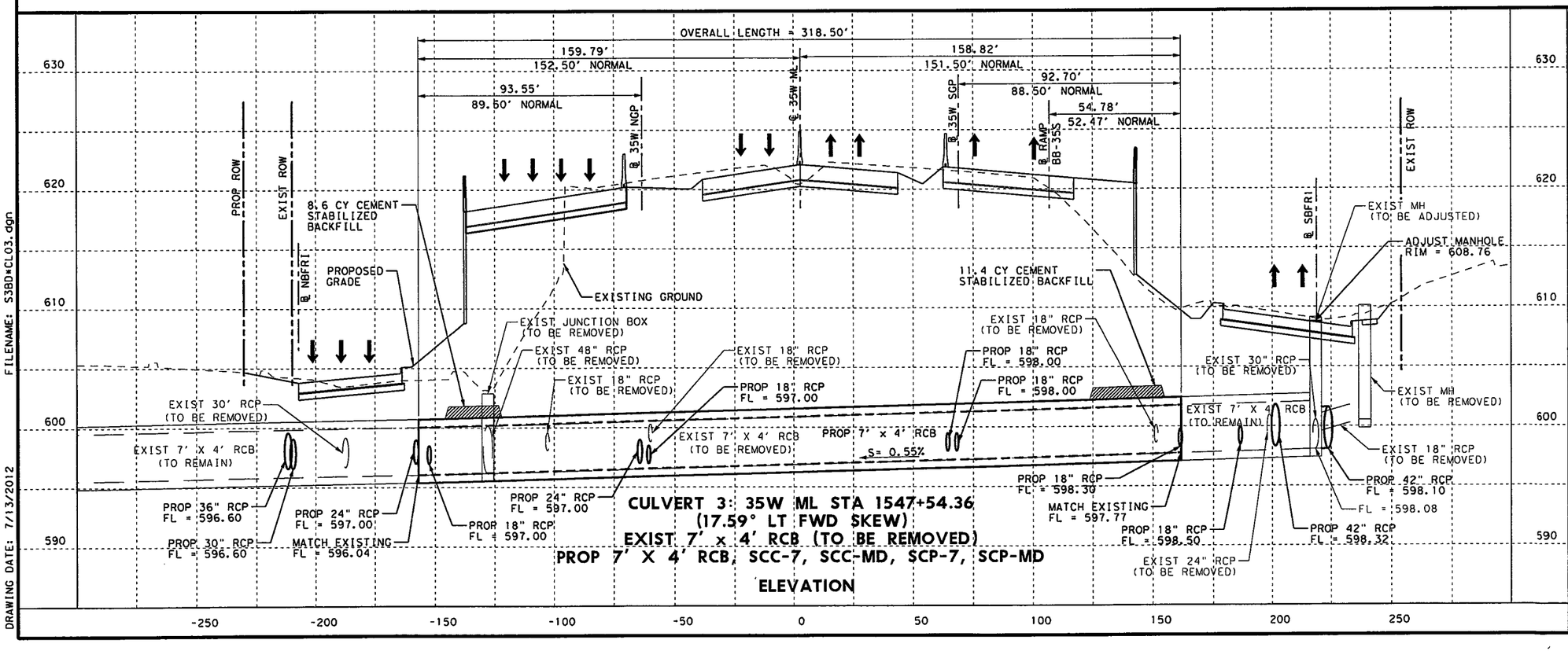

ELEVATION

FILENAME: S3BD*CL03.dgn

DRAWING DATE: 7/13/2012

STATE OF TEXAS
JOHN A. TERRY
51729
REGISTERED PROFESSIONAL ENGINEER

7-5-12

H & H RESOURCES, INC (TBPE F-3678)

H & H RESOURCES
CIVIL ENGINEERS
TBPE REGISTRATION NO. F-3678

Texas Department of Transportation
© 2012

IH 35W FROM NORTH TARRANT PKWY TO IH 820

CULVERT 3 LAYOUT
35W ML STA 1547+54.36

SCALE: 1" = 50' H, 1" = 10' V — SHEET 1 OF 1

DESIGN	FED. RD. DIV. NO.	FEDERAL AID PROJECT NO.		HIGHWAY NO.
JKB	6	(SEE TITLE SHEET)		IH 35W
GRAPHICS CA	STATE	DISTRICT	COUNTY	SHEET NO.
CHECK JKB	TEXAS	FTW	TARRANT	1160
CHECK JT	CONTROL	SECTION	JOB	
	0014	16	255, ETC.	

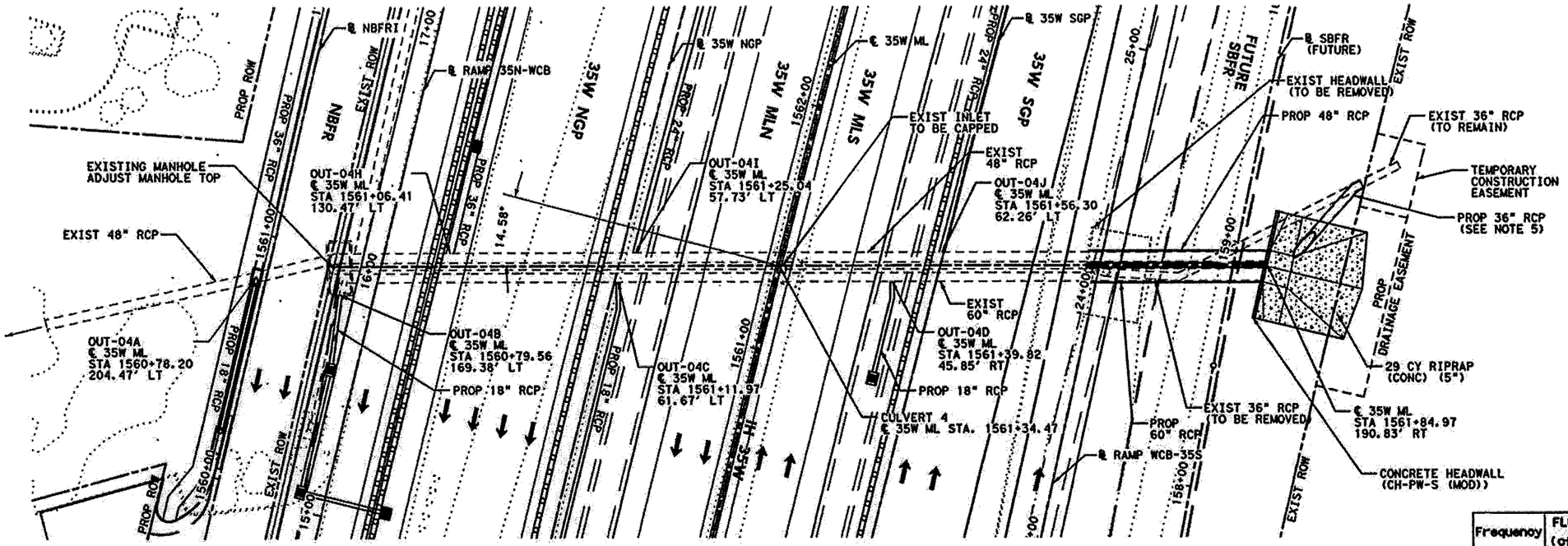

PLAN

HORZ 0' 25' 50'
VERT 0' 2.5' 5'
SCALE IN FEET

NOTES:

1. ALL STATIONS SHOWN BASED ON ℄ 35W ML UNLESS OTHERWISE NOTED.
2. DESIGN FREQUENCY 50-YEAR.
3. HYDROLOGIC COMPUTATIONS BY RATIONAL METHOD. SEE SHEET 1138.
4. FOR COMPLETE HYDRAULIC DATA SEE SHEET 1154.
5. SEE SHEET 2 OF 2 FOR PROPOSED 36" PLAN/PROFILE.
6. SEE DRAINAGE PLAN & PROFILE SHEETS FOR LATERAL INFORMATION.

Frequency	FLOW (cfs)	VEL (ft/sec)	Do (ft)	Dn (ft)	TW (ft)	HWa (ft)	HW (ft)
50	123	7.01	2.52	2.22	618.49	624.08	618.57
100	134	4.73	4.25	2.32	620.57	624.08	620.68

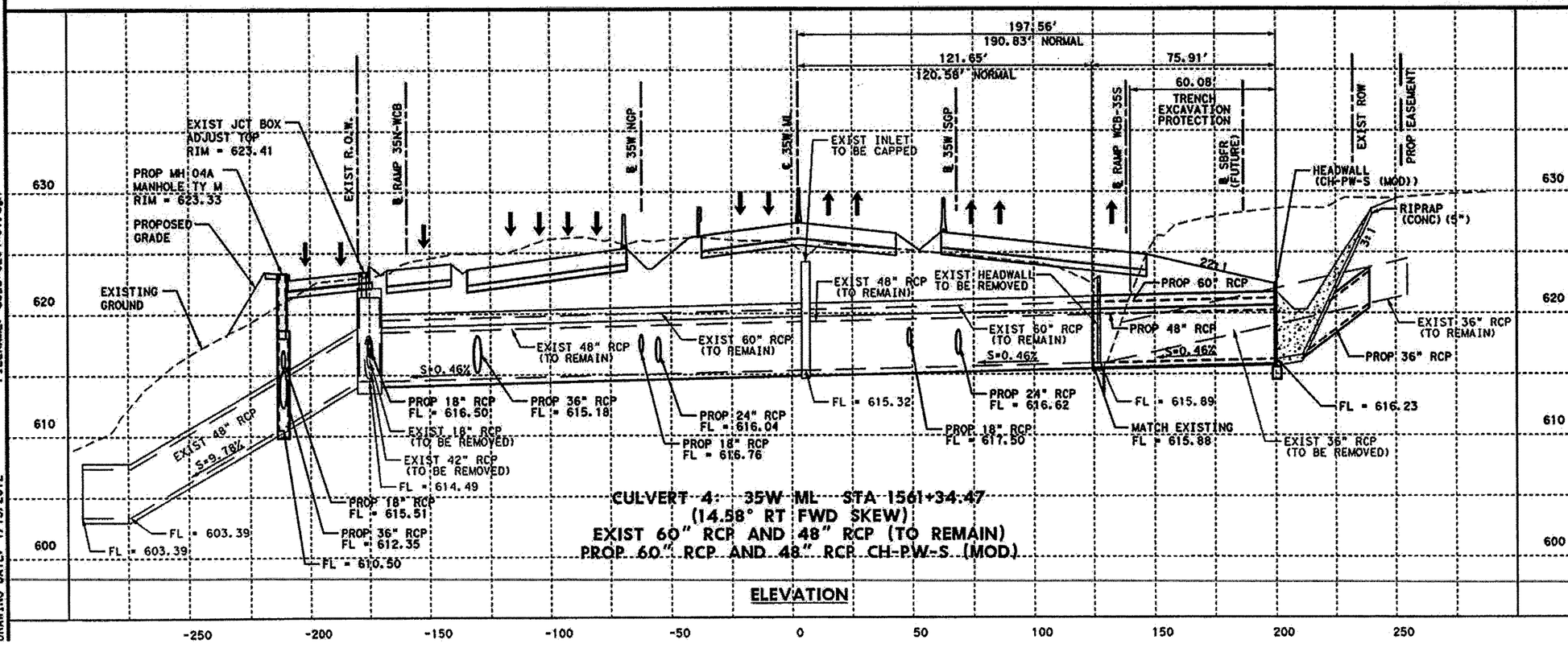

ELEVATION

FILENAME: S3B0nCL04n01.dgn
DRAWING DATE: 7/13/2012

STATE OF TEXAS
JOHN A. TERRY
51729
REGISTERED
PROFESSIONAL ENGINEER

7-31-12

H & H RESOURCES, INC (TBPE F-3678)

H & H RESOURCES
CIVIL ENGINEERS
TBPE REGISTRATION NO. F-3678

Texas Department of Transportation
© 2012

IH 35W FROM NORTH TARRANT PKWY TO IH 820

CULVERT 4 LAYOUT
35W ML STA 1561+34.47

SCALE: 1" = 50' H, 1" = 5' V

SHEET 1 OF 2

DESIGN	FED. RD. DIV. NO.	FEDERAL AID PROJECT NO.		HIGHWAY NO.
JKB	6	(SEE TITLE SHEET)		IH 35W
GRAPHICS CA	STATE	DISTRICT	COUNTY	SHEET NO.
CHECK JKB	TEXAS	FTW	TARRANT	1161
CHECK JT	CONTROL 0014	SECTION 16	JOB 255, ETC.	

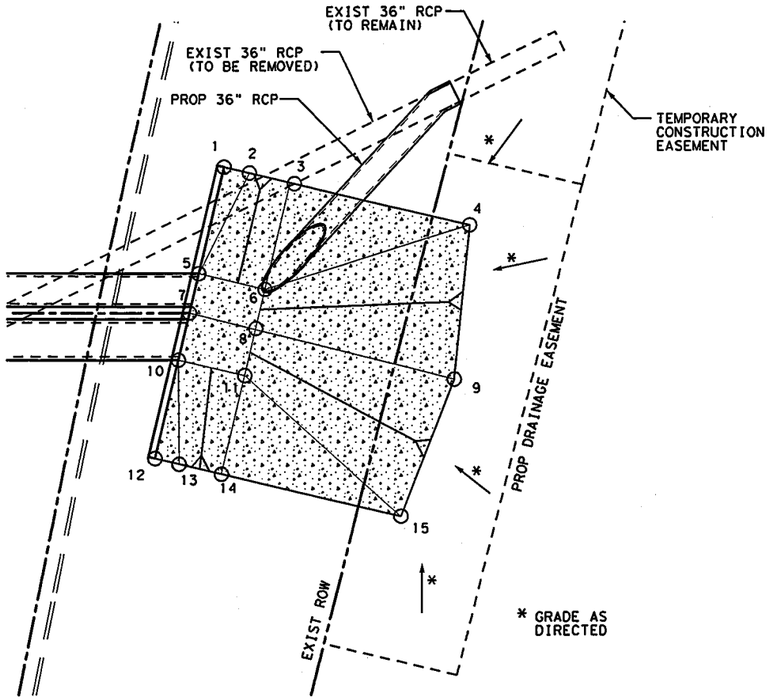

RIPRAP GRADING DETAIL

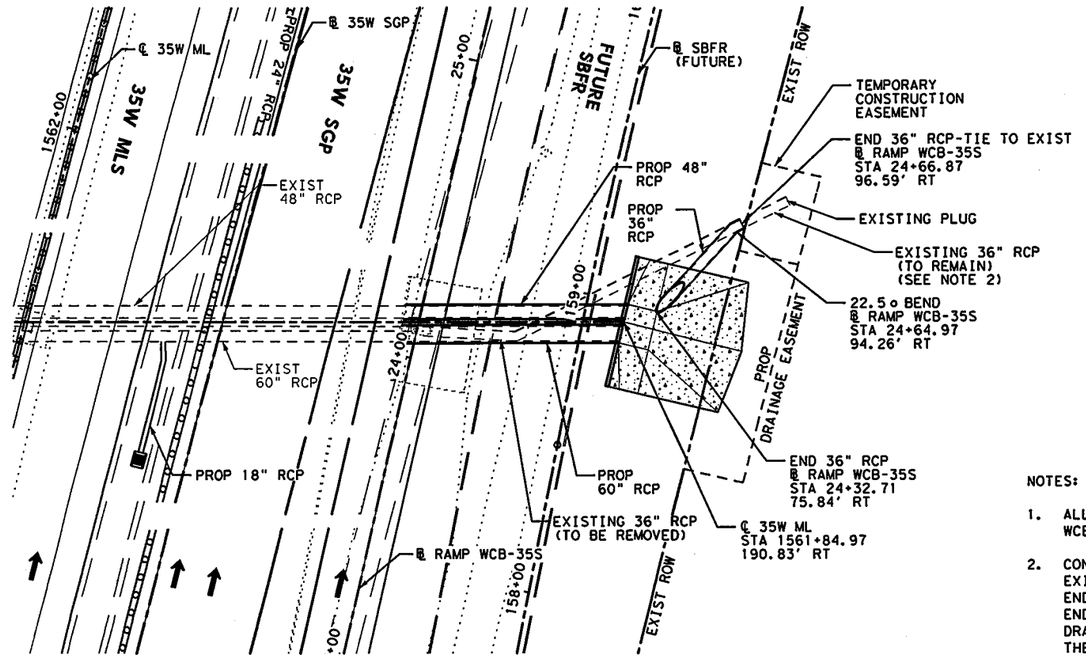

PLAN

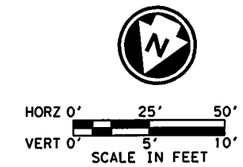

NOTES:

1. ALL STATIONS SHOWN BASED ON ℄ RAMP WCB-35S UNLESS OTHERWISE NOTED.
2. CONTRACTOR TO VERIFY LOCATION OF EXISTING 36" RCP. EXPOSE UPSTREAM END OF EXISTING 36" RCP. IF UPSTREAM END IS LOCATED INSIDE PROPOSED DRAINAGE EASEMENT, COORDINATE WITH THE ENGINEER TO ACQUIRE A RIGHT OF ENTRY. UPON APPROVAL EXTEND 36" RCP BEYOND EASEMENT LIMITS AND PLUG AS DIRECTED.

GRADING POINT TABLE

Point No.	Ramp WCB-35S Station	Offset	Elev
1	24+48.76	65.97' Rt	621.42
2	24+48.73	69.80' Rt	620.09
3	24+48.68	75.97' Rt	620.09
4	24+48.46	102.97' Rt	629.09
5	24+32.71	65.86' Rt	616.23
6	24+32.71	75.84' Rt	616.73
7	24+26.30	65.79' Rt	616.73
8	24+26.20	75.79' Rt	616.73
9	24+25.97	105.79' Rt	628.73
10	24+19.80	65.74' Rt.	616.23
11	24+19.72	75.73' Rt.	616.73
12	24+05.02	65.61' Rt	621.42
13	24+04.99	69.22' Rt	620.09
14	24+04.93	75.61' Rt	620.09
15	24+04.71	102.61' Rt	629.09

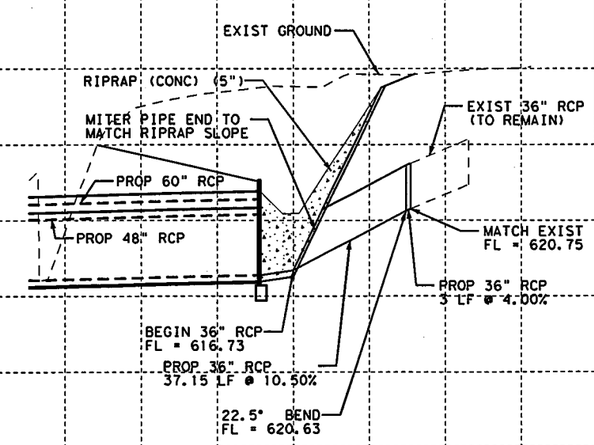

STATE OF TEXAS
JOHN A. TERRY
51729
REGISTERED PROFESSIONAL ENGINEER

8-16-12

H & H RESOURCES, INC (TBPE F-3678)

H & H RESOURCES
CIVIL ENGINEERS
TBPE REGISTRATION NO. F-3678

Texas Department of Transportation
© 2012

IH 35W FROM NORTH TARRANT PKWY TO IH 820

CULVERT 4 LAYOUT

35W ML STA 1561+34.47

SCALE: 1" = 50' H, 1" = 10' V — SHEET 2 OF 2

DESIGN	FED. RD. DIV. NO.	FEDERAL AID PROJECT NO.		HIGHWAY NO.
JAT	6	(SEE TITLE SHEET)		IH 35W
GRAPHICS CA	STATE	DISTRICT	COUNTY	SHEET NO.
CHECK JKB	TEXAS	FTW	TARRANT	1162
CHECK JT	CONTROL 0014	SECTION 16	JOB 255, ETC.	

FILENAME: S3BD*CL04*02.dgn

DRAWING DATE: 7/13/2012

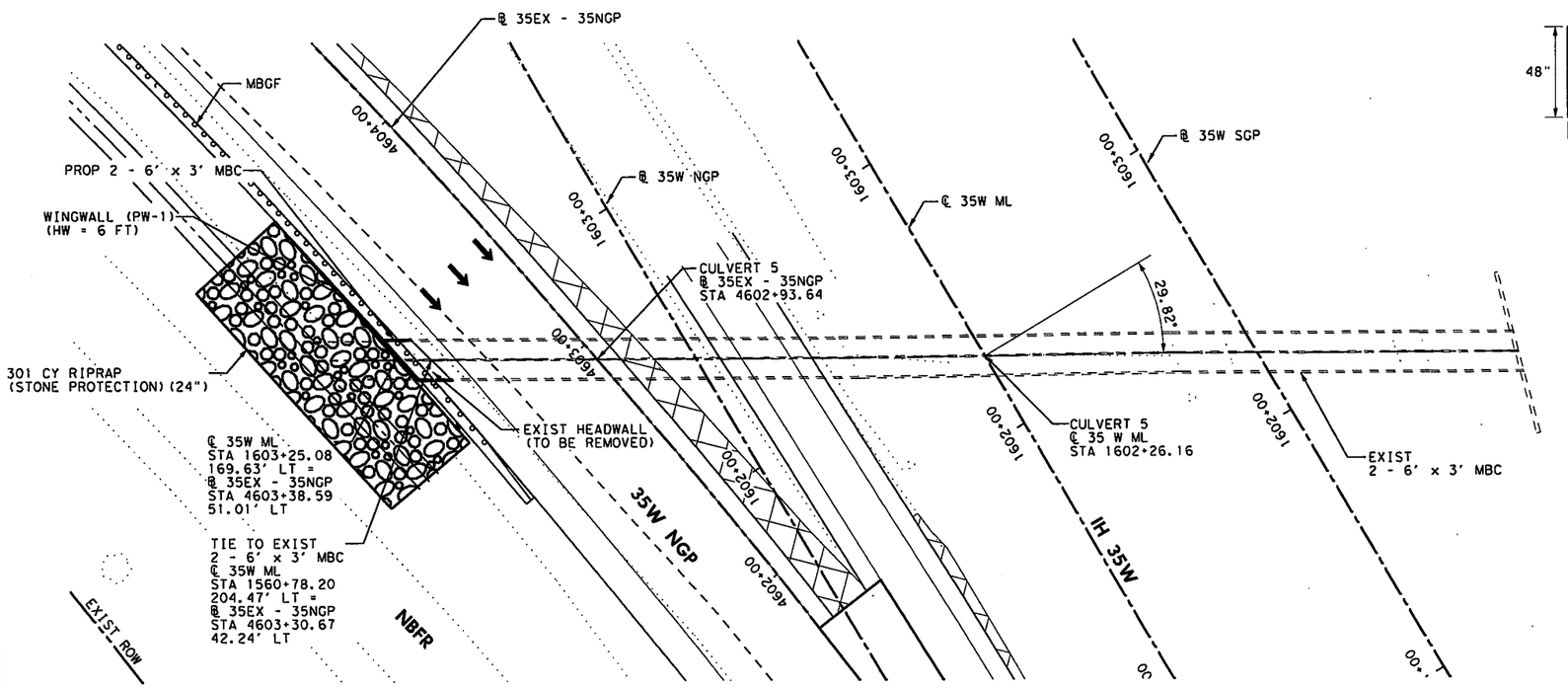

PLAN

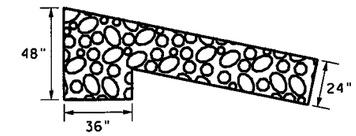

RIPRAP EDGE DETAIL

N. T. S.

HORZ 0' 25' 50'
VERT 0' 2.5' 5'
SCALE IN FEET

NOTES:

1. ALL STATIONS SHOWN BASED ON ℄ 35W ML UNLESS OTHERWISE NOTED.
2. DESIGN FREQUENCY 50-YEAR.

HYDROLOGIC DATA		
AREA =	55.14	AC.
RUNOFF C =	0.60	
Tc =	32	MINUTES
I_{50} =	7.13	IN/HR
Q_{50} =	236	DFS

HYDRAULIC DATA		
TW_{50} =	631.06	
Q/BBL =	118	CFS
HW ALLOW =	636	
CULVERT SLOPE =	0.0026	FT/FT
EXIST. LENGTH =	365	FT/FT
HW_{50} =	633.08	
Vout =	6.56	FPS

HYDROLOGIC AND HYDRAULIC DATA FROM TxDOT CONSTRUCTION PLANS

IH 35W CSJ 0014-16-194

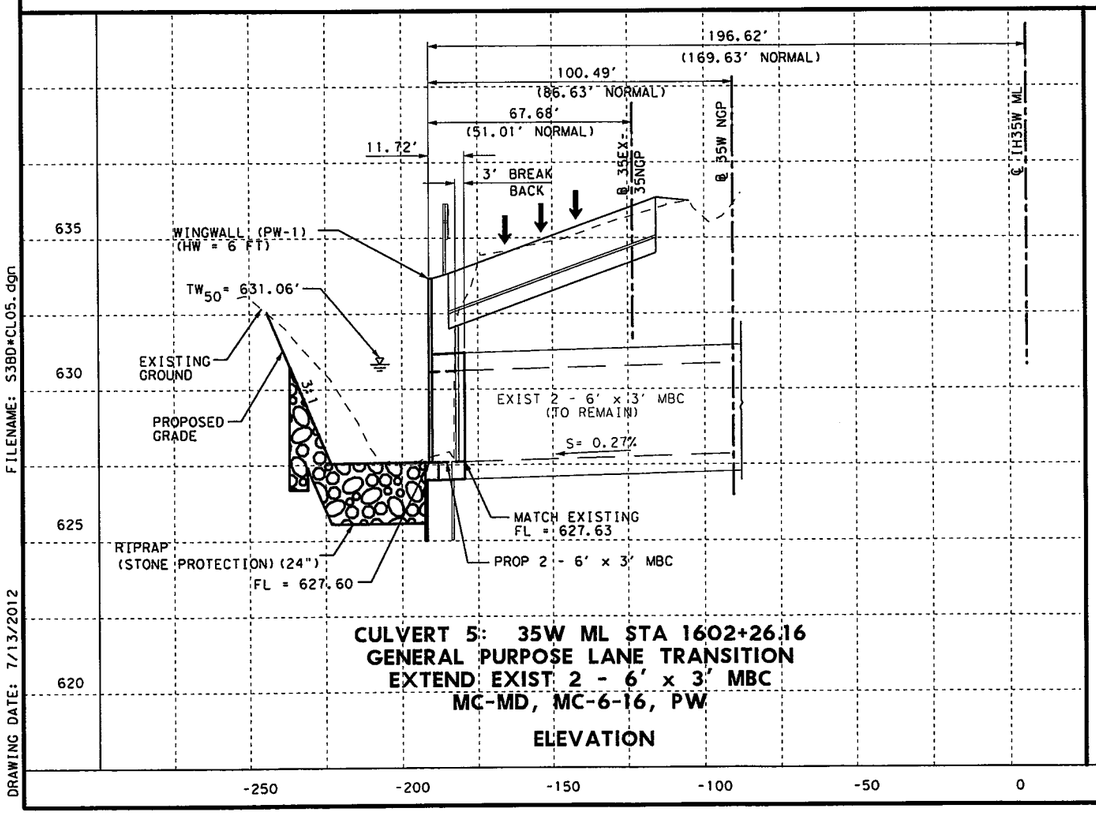

CULVERT 5: 35W ML STA 1602+26.16
GENERAL PURPOSE LANE TRANSITION
EXTEND EXIST 2 - 6' x 3' MBC
MC-MD, MC-6-16, PW

ELEVATION

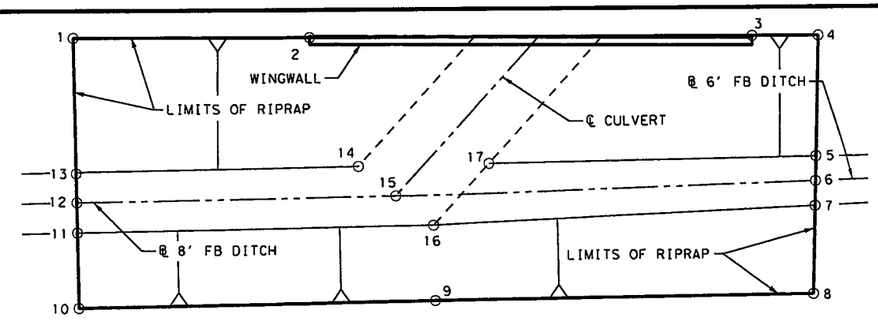

GRADING AND RIPRAP DETAIL

GRADING POINT TABLE							
Pt.	* Sta.	* Offset	Elev.	Pt.	* Sta.	* Offset	Elev.
1	4604+00.00	49.50	633.35	10	4604+00.00	85.20	630.78
2	4603+68.50	49.50	633.46	11	4604+00.00	75.20	627.45
3	4603+09.00	49.50	633.68	12	4604+00.00	71.20	627.45
4	4603+00.00	49.50	633.70	13	4604+00.00	67.20	627.45
5	4603+00.00	64.32	628.76	14	4603+61.91	66.99	627.54
6	4603+00.00	67.32	628.76	15	4603+56.84	70.85	627.54
7	4603+00.00	70.32	628.76	16	4603+51.75	74.84	627.54
8	4603+00.00	83.64	632.06	17	4603+44.77	67.26	627.56
9	4603+51.57	84.84	630.87				
* BL 35EX-35NGP (ALL OFFSETS TO LEFT)							

STATE OF TEXAS
JOHN A. TERRY
51729
REGISTERED
PROFESSIONAL ENGINEER

7-5-12

H & H RESOURCES, INC (TBPE F-3678)

H & H RESOURCES
CIVIL ENGINEERS
TBPE REGISTRATION NO. F-3678

Texas Department of Transportation
© 2012

IH 35W FROM NORTH TARRANT PKWY TO IH 820

CULVERT 5 LAYOUT
35W ML
STA 1602+26.16

SCALE: 1" = 50' H, 1" = 5' V — SHEET 1 OF 1

DESIGN	FED. RD. DIV. NO.	FEDERAL AID PROJECT NO.		HIGHWAY NO.
JKB	6	(SEE TITLE SHEET)		IH 35W
GRAPHICS CA	STATE	DISTRICT	COUNTY	SHEET NO.
CHECK JKB	TEXAS	FTW	TARRANT	1163
CHECK JT	CONTROL	SECTION	JOB	
	0014	16	255, ETC.	

FILENAME: S3BD*CL05.dgn
DRAWING DATE: 7/13/2012

HORIZONTAL ALIGNMENT FOR CULVERT 1 CHANNEL ℄ TRIB2A

Beginning chain TRIB2A description

Point TRIB100	N	7,010,094.81	E	2,332,216.56	Sta	0+00.00
Course from TRIB100 to TRIB101 N 88° 48′ 50.85" W Dist 24.76						
Point TRIB101	N	7,010,095.32	E	2,332,191.80	Sta	0+24.76
Course from TRIB101 to TRIB102 N 88° 48′ 50.85" W Dist 24.76						
Point TRIB102	N	7,010,095.83	E	2,332,167.04	Sta	0+49.53
Course from TRIB102 to TRIB103 S 89° 36′ 00.31" W Dist 97.07						
Point TRIB103	N	7,010,095.15	E	2,332,069.97	Sta	1+46.60
Course from TRIB103 to TRIB104 S 89° 28′ 48.98" W Dist 60.00						
Point TRIB104	N	7,010,094.61	E	2,332,009.97	Sta	2+06.60
Course from TRIB104 to TRIB105 S 86° 23′ 58.07" W Dist 67.69						
Point TRIB105	N	7,010,090.36	E	2,331,942.41	Sta	2+74.29
Course from TRIB105 to TRIB106 S 89° 27′ 14.30" W Dist 276.99						
Point TRIB106	N	7,010,087.72	E	2,331,665.43	Sta	5+51.28
Course from TRIB106 to TRIB107 S 89° 58′ 37.25" W Dist 42.10						
Point TRIB107	N	7,010,087.70	E	2,331,623.33	Sta	5+93.39
Course from TRIB107 to TRIB108 S 89° 28′ 45.77" W Dist 55.78						
Point TRIB108	N	7,010,087.20	E	2,331,567.56	Sta	6+49.16
Course from TRIB108 to TRIB109 S 89° 28′ 45.77" W Dist 16.26						
Point TRIB109	N	7,010,087.05	E	2,331,551.30	Sta	6+65.42
Course from TRIB109 to TRIB110 S 89° 19′ 36.60" W Dist 12.71						
Point TRIB110	N	7,010,086.90	E	2,331,538.58	Sta	6+78.14

Ending chain TRIB2A description

HORIZONTAL ALIGNMENT FOR CULVERT 2 CHANNEL ℄ BFC2

Beginning chain BFC2 description

Point BFC100	N	7,005,995.37	E	2,332,368.79	Sta	125+00.00
Course from BFC100 to BFC101 N 37° 44′ 33.96" W Dist 25.00						
Point BFC101	N	7,006,015.14	E	2,332,353.48	Sta	125+25.00
Course from BFC101 to BFC102 N 41° 19′ 10.53" W Dist 89.15						
Point BFC102	N	7,006,082.09	E	2,332,294.62	Sta	126+14.15
Course from BFC102 to BFC103 N 35° 40′ 29.73" W Dist 279.47						
Point BFC103	N	7,006,309.12	E	2,332,131.64	Sta	128+93.62
Course from BFC103 to BFC104 N 39° 04′ 03.95" W Dist 167.01						
Point BFC104	N	7,006,438.78	E	2,332,026.39	Sta	130+60.63
Course from BFC104 to BFC105 N 35° 31′ 46.57" W Dist 606.03						
Point BFC105	N	7,006,931.98	E	2,331,674.21	Sta	136+66.66
Course from BFC105 to PC BFC2-1 N 36° 22′ 39.13" W Dist 93.95						

Curve Data

Curve BFC2-1						
P.I. Station		137+91.66	N	7,007,032.62	E	2,331,600.07
Delta	=	8° 52′ 33.78"	(RT)			
Degree	=	14° 19′ 26.20"				
Tangent	=	31.05				
Length	=	61.97				
Radius	=	400.00				
External	=	1.20				
Long Chord	=	61.90				
Mid. Ord.	=	1.20				
P.C. Station		137+60.61	N	7,007,007.62	E	2,331,618.48
P.T. Station		138+22.58	N	7,007,060.16	E	2,331,585.73
C.C.			N	7,007,244.87	E	2,331,940.53
Back	= N	36° 22′ 39.13" W				
Ahead	= N	27° 30′ 05.35" W				
Chord Bear	= N	31° 56′ 22.24" W				

Course from PT BFC2-1 to PC BFC2-2 N 27° 30′ 05.35" W Dist 45.42

Curve Data

Curve BFC2-2						
P.I. Station		139+35.28	N	7,007,160.13	E	2,331,533.69
Delta	=	19° 05′ 48.84"	(LT)			
Degree	=	14° 19′ 26.20"				
Tangent	=	67.28				
Length	=	133.32				
Radius	=	400.00				
External	=	5.62				
Long Chord	=	132.71				
Mid. Ord.	=	5.54				
P.C. Station		138+68.00	N	7,007,100.44	E	2,331,564.76
P.T. Station		140+01.32	N	7,007,206.36	E	2,331,484.80
C.C.			N	7,006,915.74	E	2,331,209.96
Back	= N	27° 30′ 05.35" W				
Ahead	= N	46° 35′ 54.19" W				
Chord Bear	= N	37° 02′ 59.77" W				

Course from PT BFC2-2 to BFC106 N 46° 35′ 54.19" W Dist 158.72

Point BFC106	N	7,007,315.41	E	2,331,369.49	Sta	141+60.04
Course from BFC106 to BFC107 N 46° 35′ 54.19" W Dist 19.64						
Point BFC107	N	7,007,328.91	E	2,331,355.21	Sta	141+79.68
Course from BFC107 to PC BFC2-3 N 46° 35′ 54.19" W Dist 14.59						

Curve Data

Curve BFC2-3						
P.I. Station		142+10.04	N	7,007,349.77	E	2,331,333.16
Delta	=	35° 00′ 00.00"	(RT)			
Degree	=	114° 35′ 29.61"				
Tangent	=	15.76				
Length	=	30.54				
Radius	=	50.00				
External	=	2.43				
Long Chord	=	30.07				
Mid. Ord.	=	2.31				
P.C. Station		141+94.27	N	7,007,338.94	E	2,331,344.61
P.T. Station		142+24.81	N	7,007,365.21	E	2,331,329.99
C.C.			N	7,007,375.26	E	2,331,378.97
Back	= N	46° 35′ 54.19" W				
Ahead	= N	11° 35′ 54.19" W				
Chord Bear	= N	29° 05′ 54.19" W				

Course from PT BFC2-3 to PC BFC2-4 N 11° 35′ 54.19" W Dist 26.31

Curve Data

Curve BFC2-4						
P.I. Station		142+73.20	N	7,007,412.61	E	2,331,320.26
Delta	=	16° 44′ 32.77"	(LT)			
Degree	=	38° 11′ 49.87"				
Tangent	=	22.07				
Length	=	43.83				
Radius	=	150.00				
External	=	1.62				
Long Chord	=	43.68				
Mid. Ord.	=	1.60				
P.C. Station		142+51.13	N	7,007,390.98	E	2,331,324.70
P.T. Station		142+94.96	N	7,007,432.03	E	2,331,309.78
C.C.			N	7,007,360.83	E	2,331,177.76
Back	= N	11° 35′ 54.19" W				
Ahead	= N	28° 20′ 26.96" W				
Chord Bear	= N	19° 58′ 10.58" W				

Course from PT BFC2-4 to BFC108 N 28° 20′ 26.96" W Dist 49.88

Point BFC108	N	7,007,475.93	E	2,331,286.11	Sta	143+44.83

Ending chain BFC2 description

STATE OF TEXAS
JAIME K. BENOLIEL
96693
LICENSED
PROFESSIONAL ENGINEER

7/9/12

H & H RESOURCES, INC (TBPE F-3678)

H & H RESOURCES
CIVIL ENGINEERS
TBPE REGISTRATION NO. F-3678

Texas Department of Transportation
© 2012

IH 35W FROM NORTH TARRANT PKWY TO IH 820

HORIZONTAL ALIGNMENT DATA
DRAINAGE CHANNELS

SHEET 1 OF 1

DESIGN	FED. RD. DIV. NO.	FEDERAL AID PROJECT NO.		HIGHWAY NO.
JKB	6	(SEE TITLE SHEET)		IH 35W
GRAPHICS	STATE	DISTRICT	COUNTY	SHEET NO.
CA	TEXAS	FTW	TARRANT	1164
CHECK	CONTROL	SECTION	JOB	
JKB / JT	0014	16	255, ETC.	

DRAWING DATE: 7/13/2012 FILENAME: S3BD*HAD*01.dgn

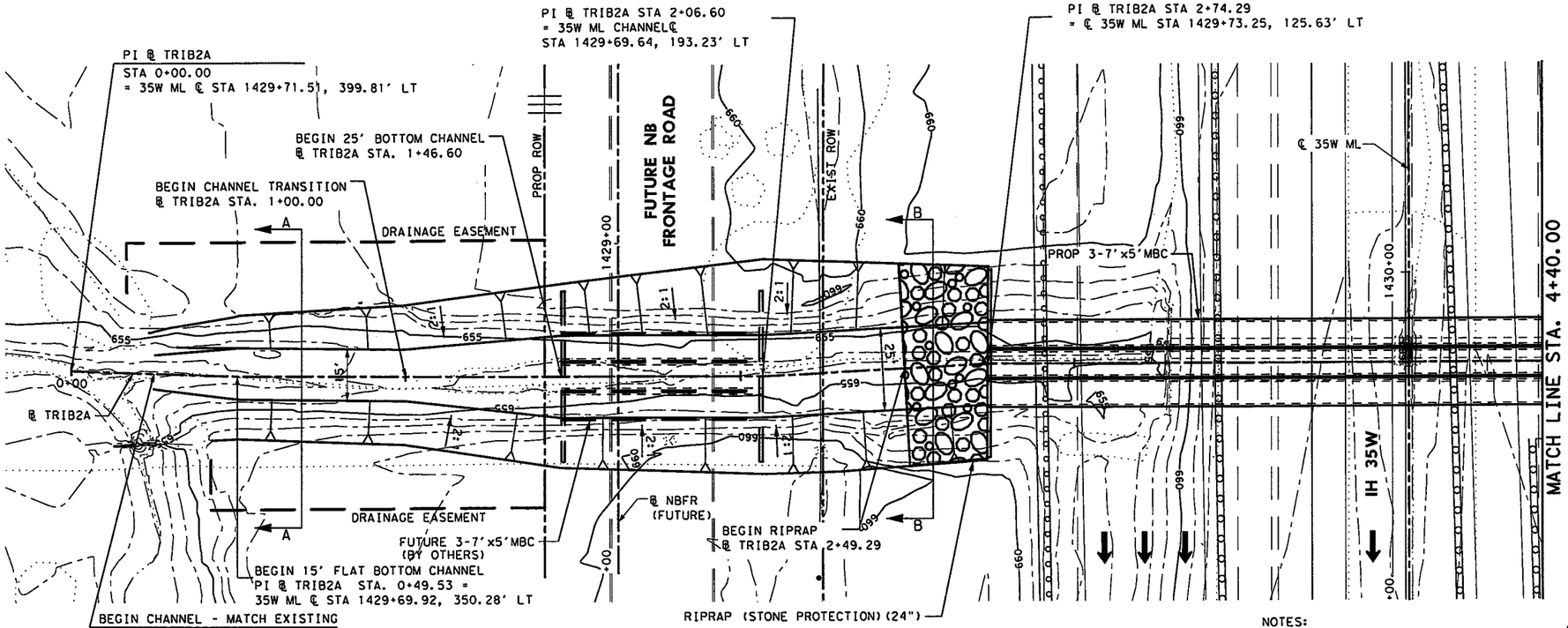

PLAN

NOTES:

1. SEE SHEET 1164 FOR HORIZONTAL ALIGNMENT DATA.

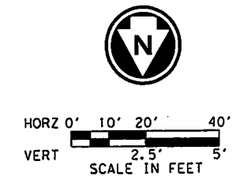

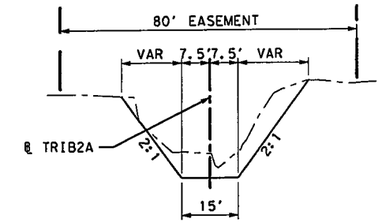

SECTION A-A

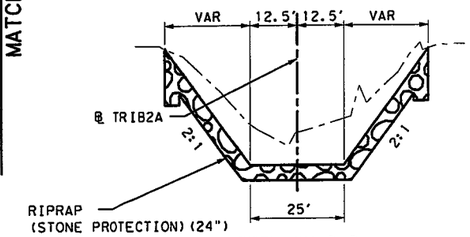

SECTION B-B

Frequency	FLOW (cfs)	VEL (ft/sec)
50	595	4.24
100	660	4.35

FOR COMPLETE HYDRAULIC DATA SEE REPORT ENTITLED 'DRAINAGE REPORT IH 35W FROM NORTH OF US 287 TO IH 820' DATED APRIL, 2012 BY H & H RESOURCES, INC.

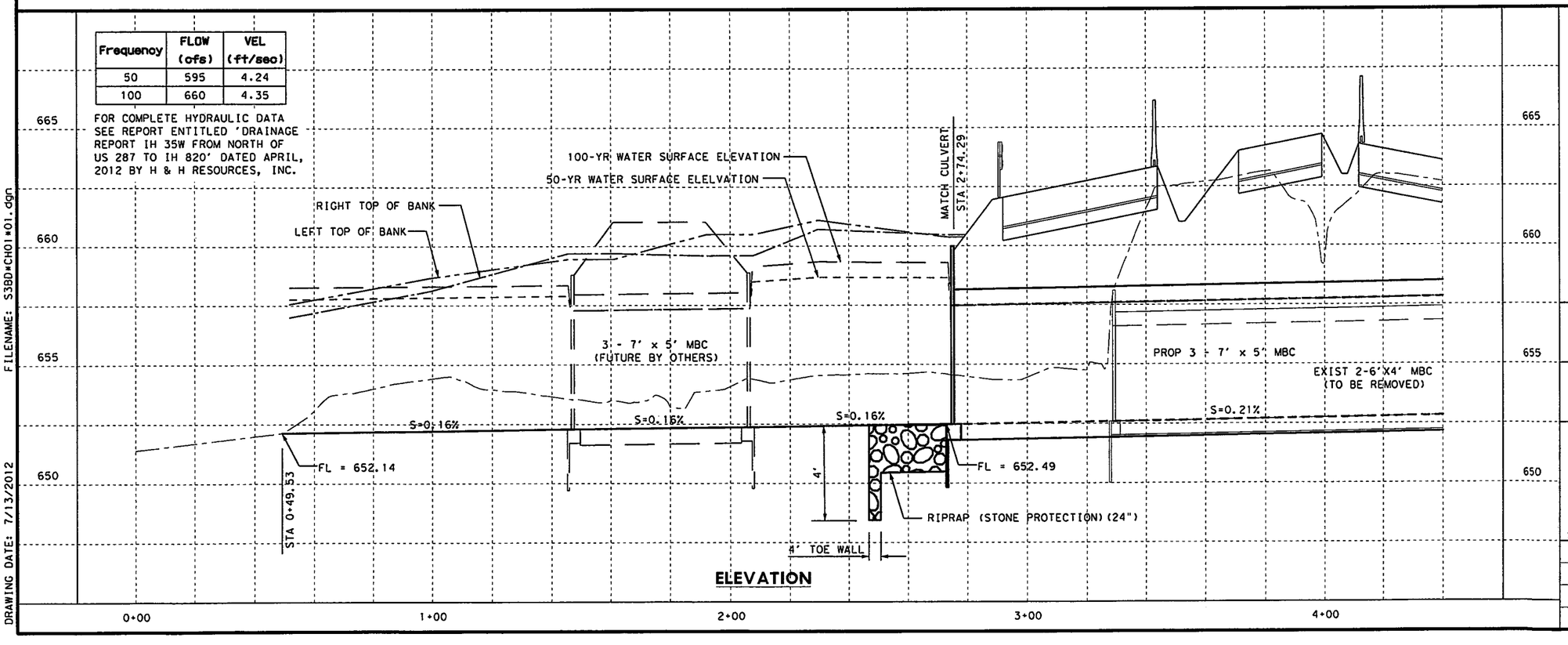

ELEVATION

FILENAME: S38D*CH01*01.dgn

DRAWING DATE: 7/13/2012

STATE OF TEXAS
JOHN A. TERRY
51729
REGISTERED
PROFESSIONAL ENGINEER

7-5-12

H & H RESOURCES, INC (TBPE F-3678)

H & H RESOURCES
CIVIL ENGINEERS
TBPE REGISTRATION NO. F-3678

Texas Department of Transportation
© 2012

IH 35W FROM NORTH TARRANT PKWY TO IH 820

CULVERT 1 CHANNEL LAYOUT
TRIB TO STREAM BFC-2A

SCALE: 1" = 40' H, 1" = 10' V — SHEET 1 OF 2

DESIGN	FED. RD. DIV. NO.	FEDERAL AID PROJECT NO.		HIGHWAY NO.
	6	(SEE TITLE SHEET)		IH 35W
GRAPHICS	STATE	DISTRICT	COUNTY	SHEET NO.
CHECK	TEXAS	FTW	TARRANT	1165
CHECK	CONTROL	SECTION	JOB	
	0014	16	255, ETC.	

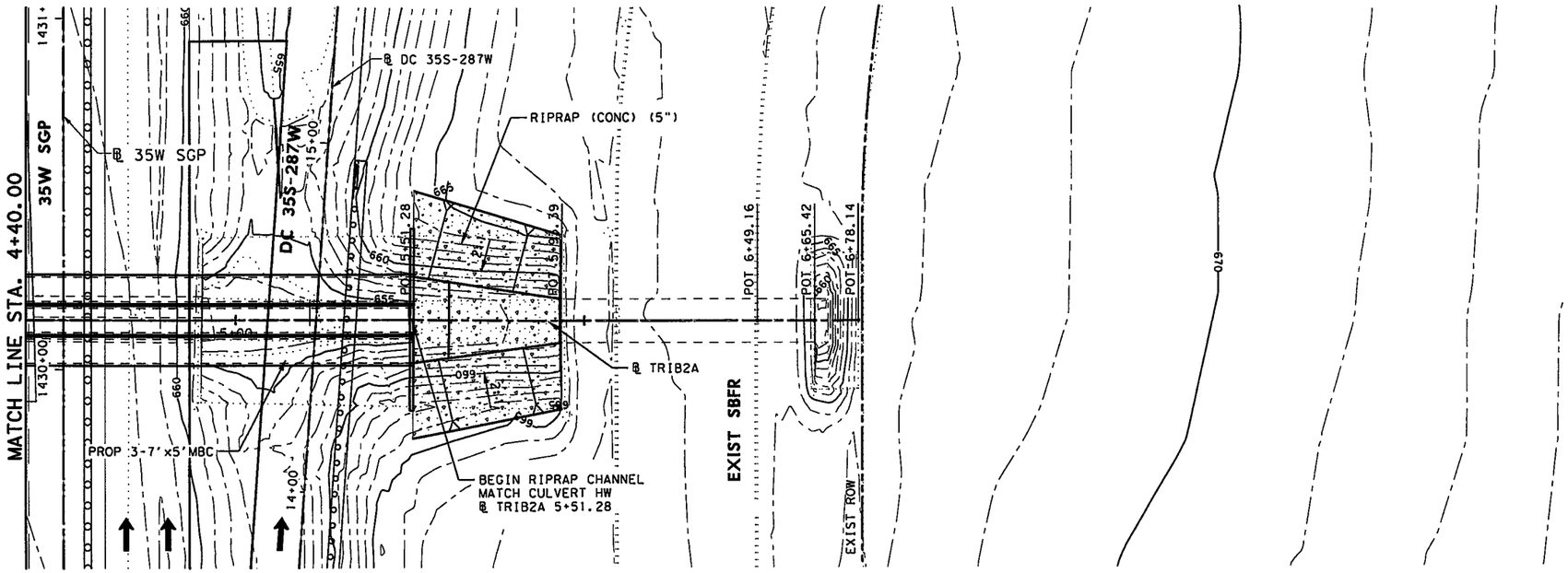

PLAN

HORZ 0' 10' 20' 40'
VERT 2.5' 5'
SCALE IN FEET

NOTES:

1. PROVIDE 8" X 18" TOE WALL AT ALL EXPOSED EDGES OF CONCRETE RIPRAP.
2. SEE SHEET 1164 FOR HORIZONTAL ALIGNMENT DATA.

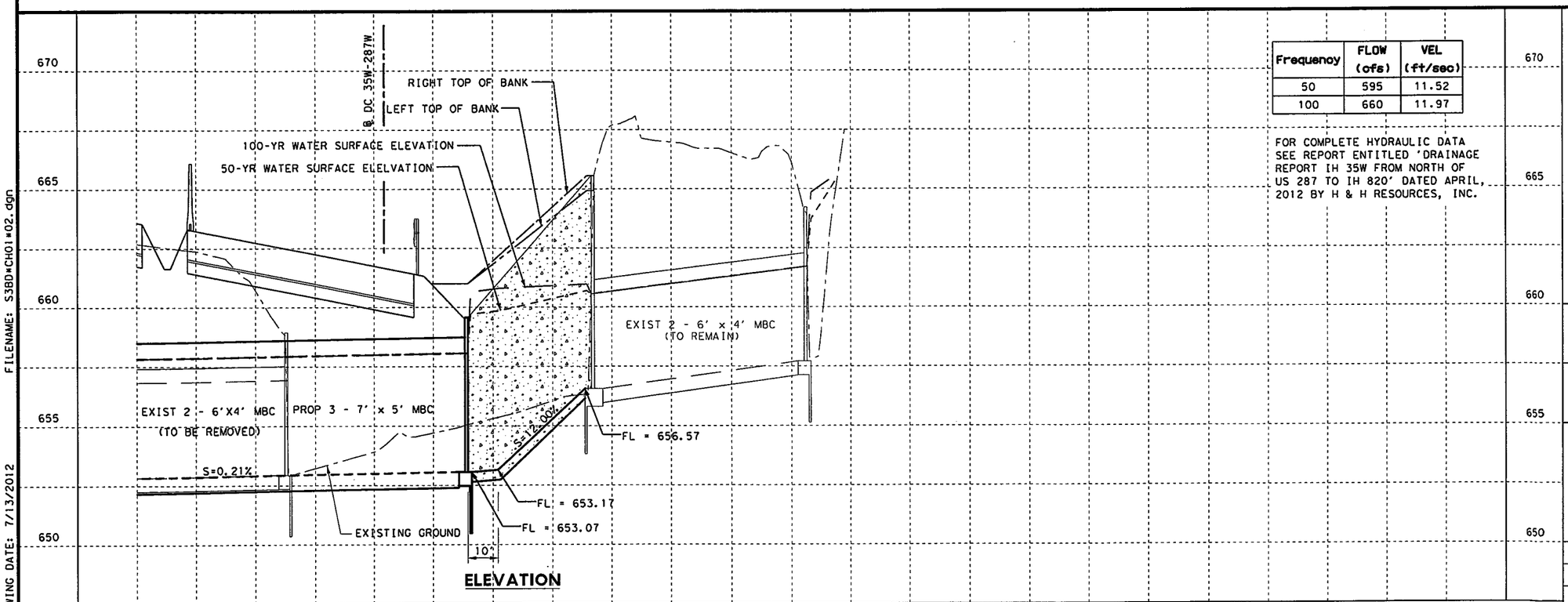

ELEVATION

Frequency	FLOW (cfs)	VEL (ft/sec)
50	595	11.52
100	660	11.97

FOR COMPLETE HYDRAULIC DATA SEE REPORT ENTITLED 'DRAINAGE REPORT IH 35W FROM NORTH OF US 287 TO IH 820' DATED APRIL, 2012 BY H & H RESOURCES, INC.

STATE OF TEXAS
JOHN A. TERRY
51729
REGISTERED PROFESSIONAL ENGINEER

7-5-12

H & H RESOURCES, INC (TBPE F-3678)

H & H RESOURCES
CIVIL ENGINEERS
TBPE REGISTRATION NO. F-3678

Texas Department of Transportation
© 2012

IH 35W FROM NORTH TARRANT PKWY TO IH 820

CULVERT 1 CHANNEL LAYOUT
TRIB TO STREAM BFC-2A

SCALE: 1" = 40' H, 1" = 10' V — SHEET 2 OF 2

DESIGN	FED.RD. DIV.NO.	FEDERAL AID PROJECT NO.		HIGHWAY NO.
JKB	6	(SEE TITLE SHEET)		IH 35W
GRAPHICS CA	STATE	DISTRICT	COUNTY	SHEET NO.
CHECK JKB	TEXAS	FTW	TARRANT	1166
CHECK JT	CONTROL	SECTION	JOB	
	0014	16	255, ETC.	

FILENAME: S3BD*CH01*02.dgn
DRAWING DATE: 7/13/2012

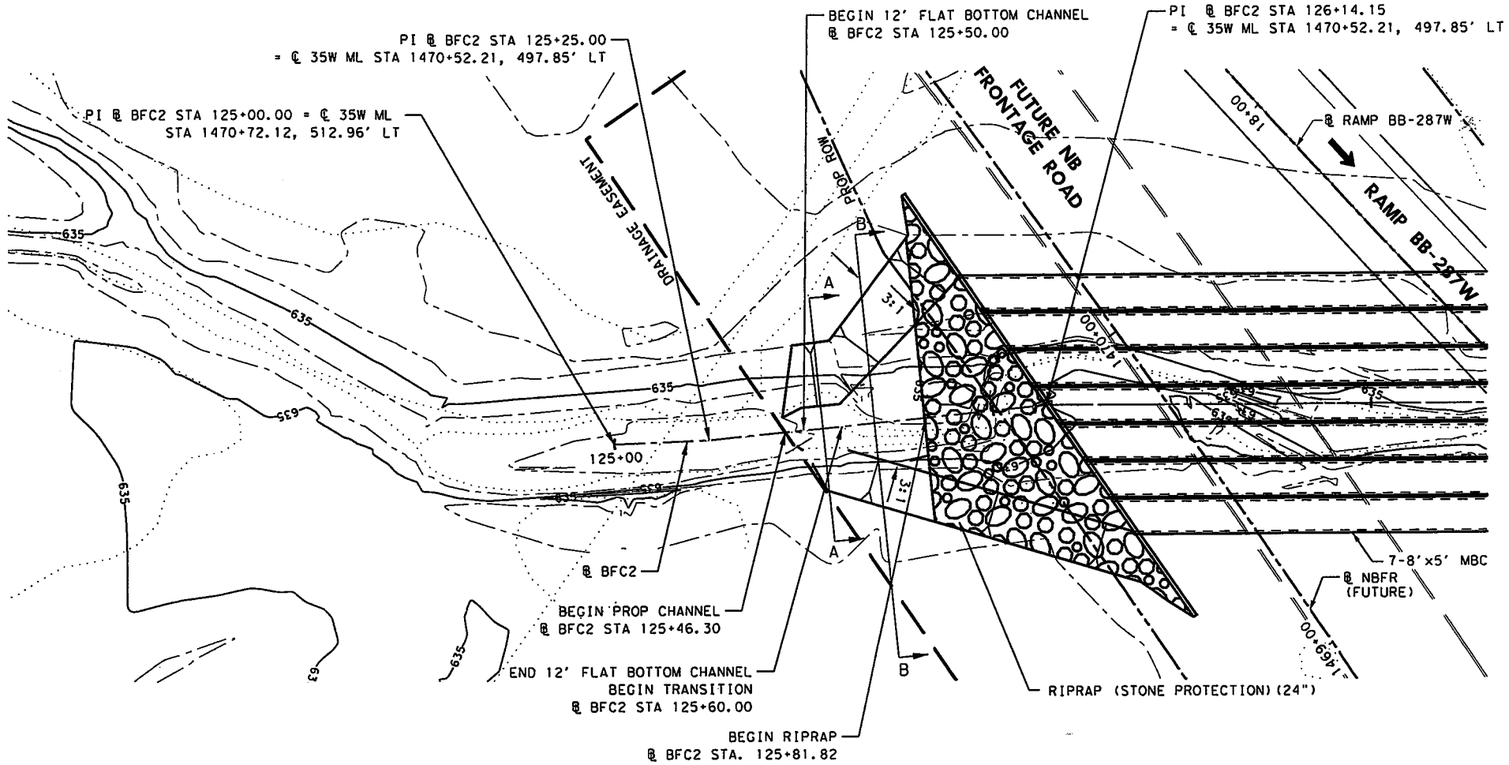

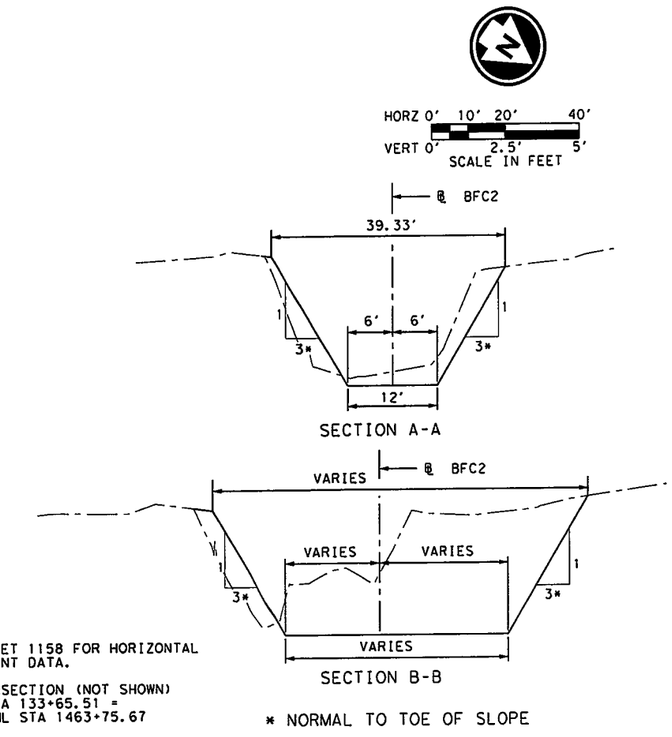

NOTES:

1. SEE SHEET 1158 FOR HORIZONTAL ALIGNMENT DATA.
2. ℄ INTERSECTION (NOT SHOWN) BFC2 STA 133+65.51 = ℄ 35W ML STA 1463+75.67

Frequency	FLOW (cfs)	VEL (ft/sec)
25	1569	4.70
50	1826	4.90
100	2086	4.97

FOR COMPLETE HYDRAULIC DATA SEE REPORT ENTITLED 'DRAINAGE REPORT IH 35W FROM NORTH OF US 287 TO IH 820' DATED APRIL 2012 BY H & H RESOURCES, INC.

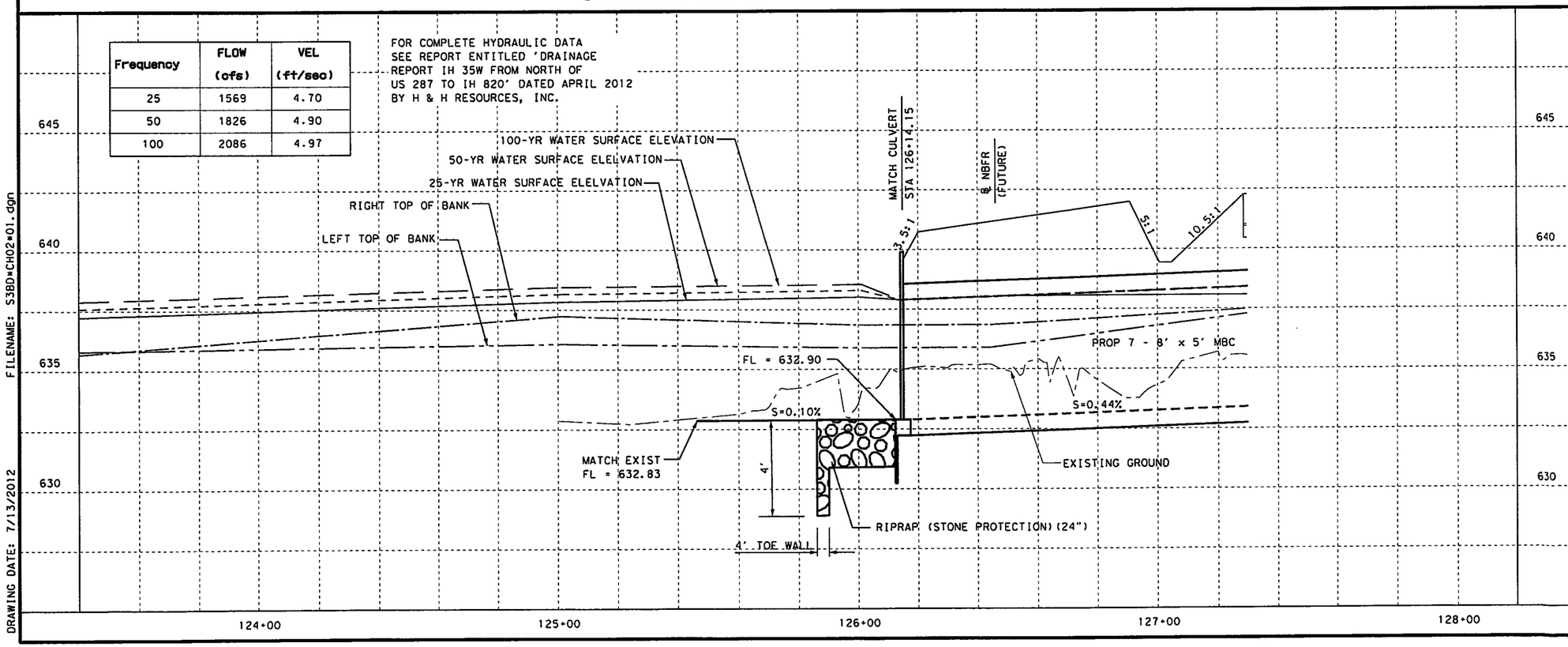

STATE OF TEXAS
JOHN A. TERRY
51729
REGISTERED PROFESSIONAL ENGINEER

7-5-12

H & H RESOURCES, INC (TBPE F-3678)

H & H RESOURCES
CIVIL ENGINEERS
TBPE REGISTRATION NO. F-3678

Texas Department of Transportation
© 2012

IH 35W FROM NORTH TARRANT PKWY TO IH 820

CULVERT 2 CHANNEL LAYOUT
STREAM BFC-2

SCALE: 1" = 40' H, 1" = 10' V — SHEET 1 OF 4

DESIGN	FED. RD. DIV. NO.	FEDERAL AID PROJECT NO.		HIGHWAY NO.
JKB	6	(SEE TITLE SHEET)		IH 35W
GRAPHICS CA	STATE	DISTRICT	COUNTY	SHEET NO.
CHECK JKB	TEXAS	FTW	TARRANT	1167
CHECK JT	CONTROL	SECTION	JOB	
	0014	16	255, ETC.	

FILENAME: S38D*CH02*01.dgn

DRAWING DATE: 7/13/2012

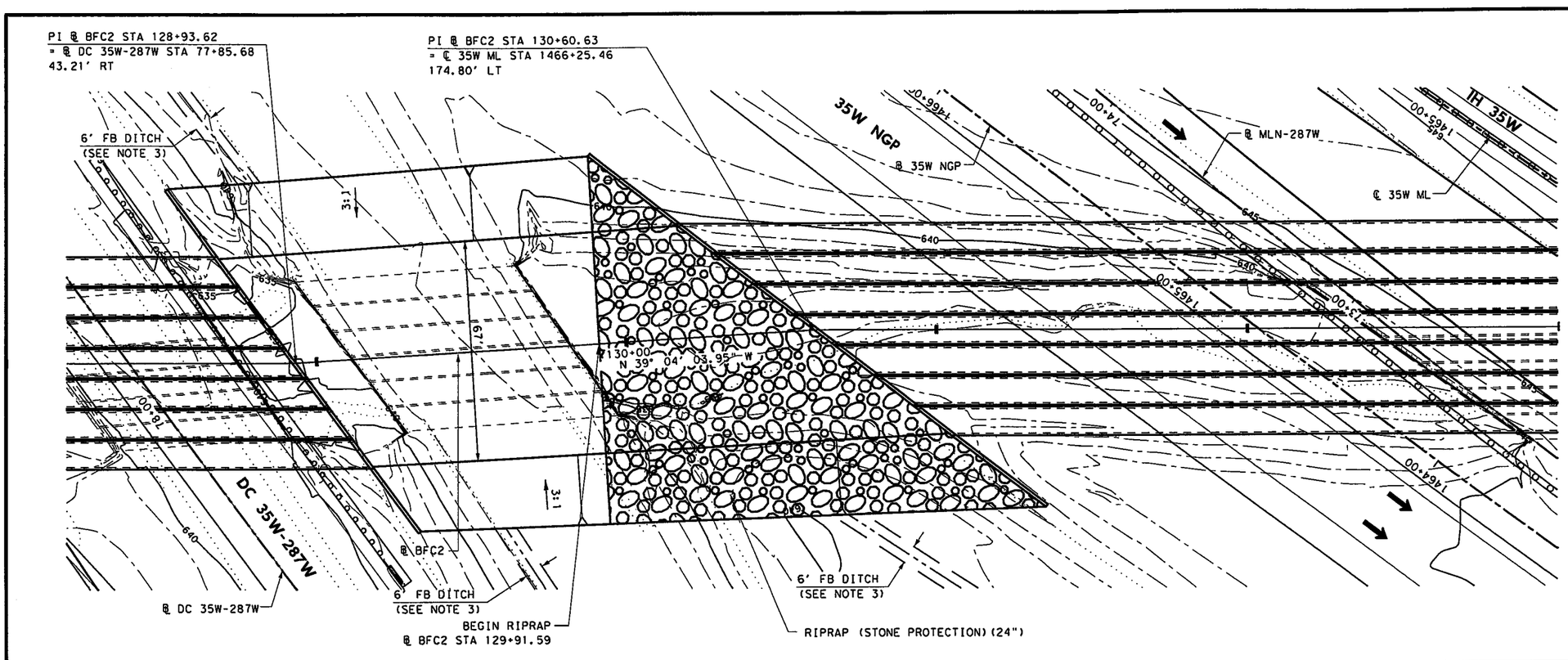

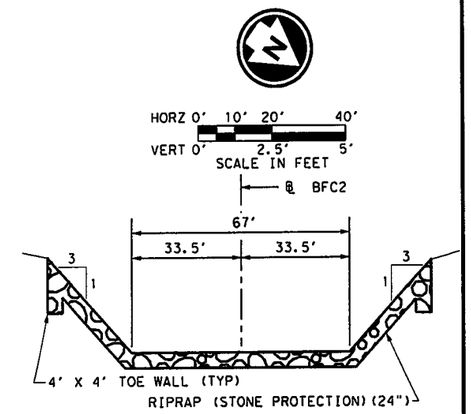

TYPICAL SECTION

NOTES:

1. SEE SHEET 1164 FOR HORIZONTAL ALIGNMENT DATA.
2. ℄ INTERSECTION (NOT SHOWN) BFC2 STA 133+65.51 = ℄ 35W ML STA 1463+75.67
3. SEE CROSS-SECTIONS FOR DITCH LOCATIONS. WHERE DITCH ENTERS CHANNEL, GRADE AND SHAPE AS DIRECTED.

Frequency	FLOW (cfs)	VEL (ft/sec)
25	1569	4.70
50	1826	4.90
100	2086	4.97

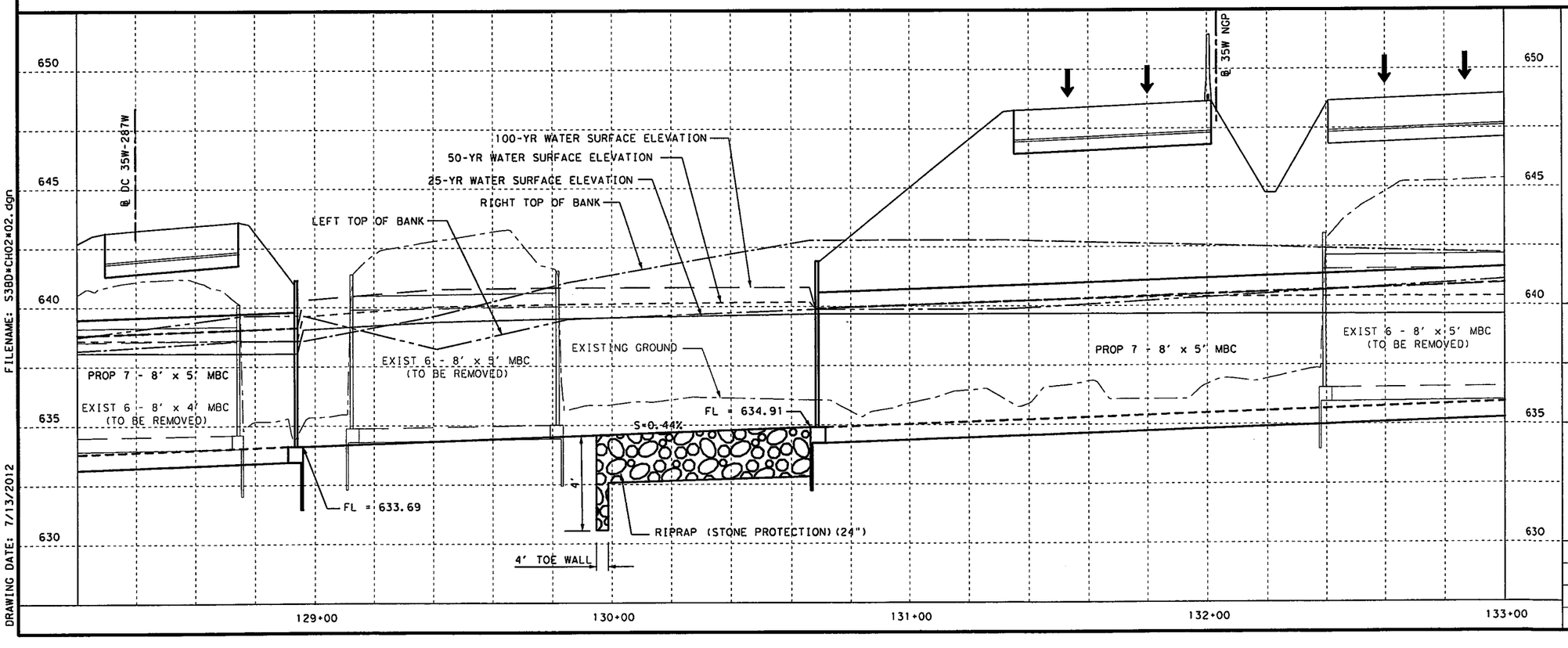

STATE OF TEXAS
JOHN A. TERRY
51729
REGISTERED PROFESSIONAL ENGINEER

7-5-12

H & H RESOURCES, INC (TBPE F-3678)

H & H RESOURCES
CIVIL ENGINEERS
TBPE REGISTRATION NO. F-3678

Texas Department of Transportation
© 2012

IH 35W FROM NORTH TARRANT PKWY TO IH 820

CULVERT 2 CHANNEL LAYOUT
STREAM BFC2

SCALE: 1" = 40' H, 1" = 10' V — SHEET 2 OF 4

DESIGN	FED. RD. DIV. NO.	FEDERAL AID PROJECT NO.		HIGHWAY NO.
JKB	6	(SEE TITLE SHEET)		IH 35W
GRAPHICS CA	STATE	DISTRICT	COUNTY	SHEET NO.
CHECK JKB	TEXAS	FTW	TARRANT	1168
CHECK JT	CONTROL	SECTION	JOB	
	0014	16	255, ETC.	

FILENAME: S3BD*CH02*02.dgn
DRAWING DATE: 7/13/2012

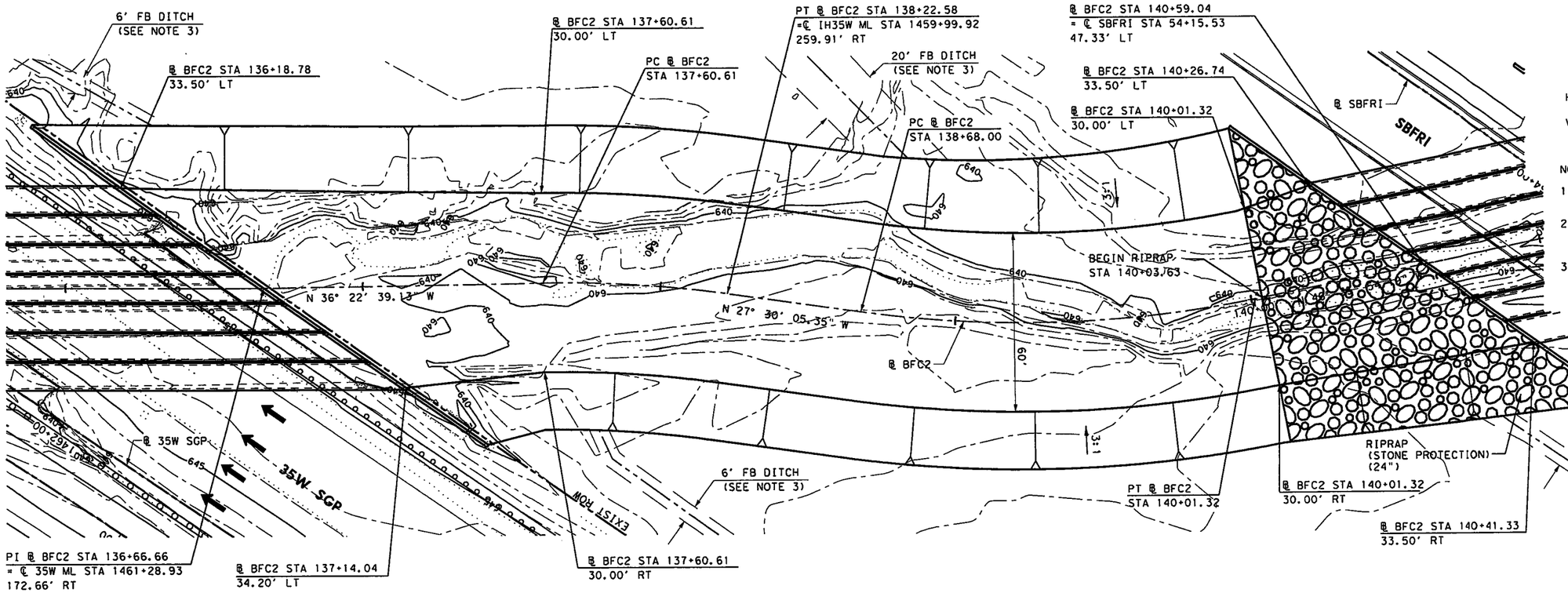

NOTES:

1. SEE SHEET 1164 FOR HORIZONTAL ALIGNMENT DATA.
2. ℄ INTERSECTION (NOT SHOWN) BFC2 STA 133+65.51 = ℄ 35W ML STA 1463+75.67
3. SEE CROSS-SECTIONS FOR DITCH LOCATIONS, WHERE DITCH ENTERS CHANNEL, GRADE AND SHAPE AS DIRECTED.

Frequency	FLOW (cfs)	VEL (ft/sec)
25	1569	3.78
50	1826	3.60
100	2086	3.49

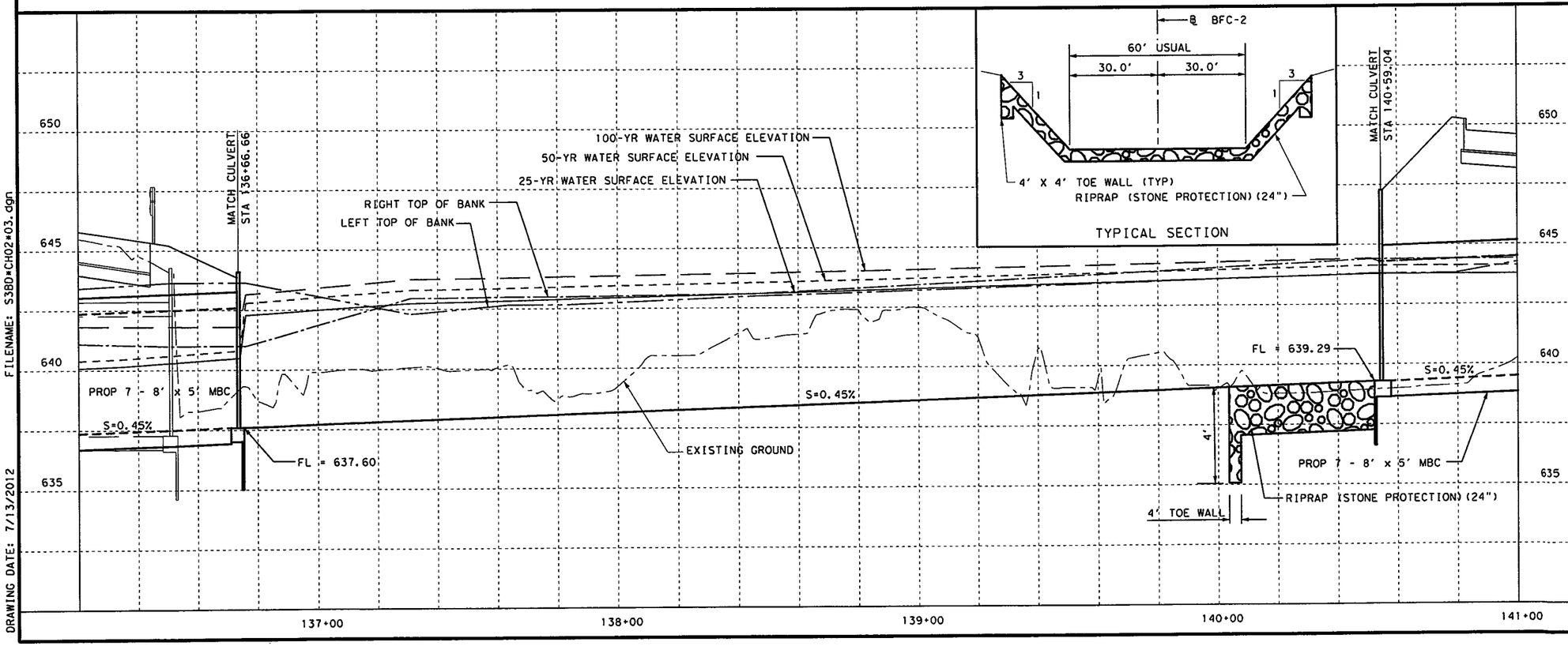

STATE OF TEXAS
JOHN A. TERRY
51729
REGISTERED PROFESSIONAL ENGINEER

7-5-12

H & H RESOURCES, INC (TBPE F-3678)

H & H RESOURCES
CIVIL ENGINEERS
TBPE REGISTRATION NO. F-3678

Texas Department of Transportation
© 2012

IH 35W FROM NORTH TARRANT PKWY TO IH 820

CULVERT 2 CHANNEL LAYOUT
STREAM BFC2

SCALE: 1" = 40' H, 1" = 10' V — SHEET 3 OF 4

DESIGN	FED. RD. DIV. NO.	FEDERAL AID PROJECT NO.		HIGHWAY NO.
JKB	6	(SEE TITLE SHEET)		IH 35W
GRAPHICS	STATE	DISTRICT	COUNTY	SHEET NO.
CA	TEXAS	FTW	TARRANT	
CHECK JKB	CONTROL	SECTION	JOB	1169
CHECK JT	0014	16	255, ETC.	

FILENAME: S38D*CH02*03.dgn
DRAWING DATE: 7/13/2012

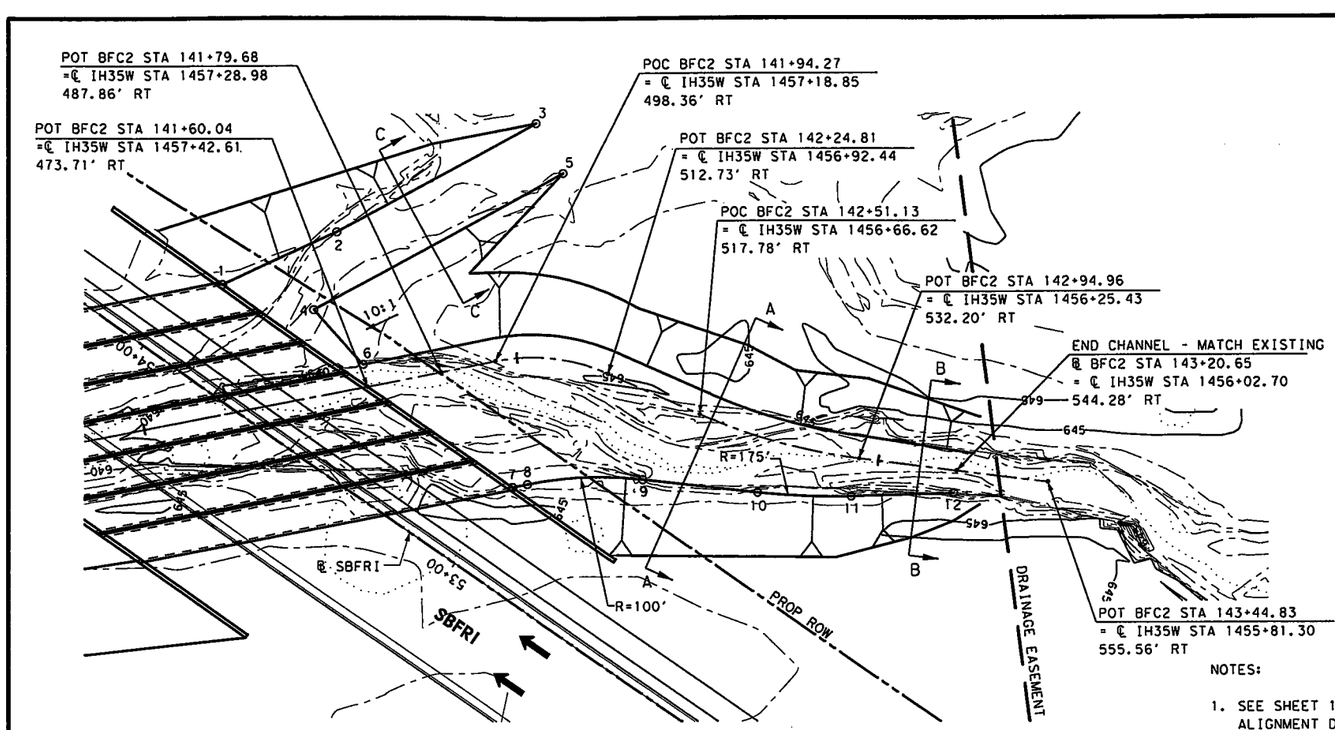

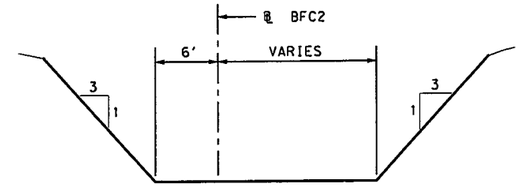

SECTION A - A

STA 141+60.04 TO STA 142+94.96

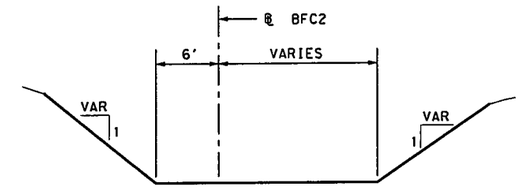

SECTION B - B

STA 142+94.96 TO STA 143+20.65

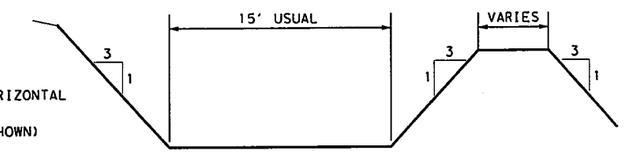

SECTION C - C

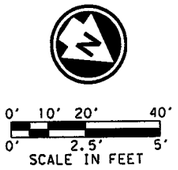

HORZ 0' 10' 20' 40'

VERT 0' 2.5' 5'

SCALE IN FEET

NOTES:

1. SEE SHEET 1158 FOR HORIZONTAL ALIGNMENT DATA.
2. ℄ INTERSECTION (NOT SHOWN) BFC2 STA 133+65.51 = ℄ 35W ML STA 1463+75.67

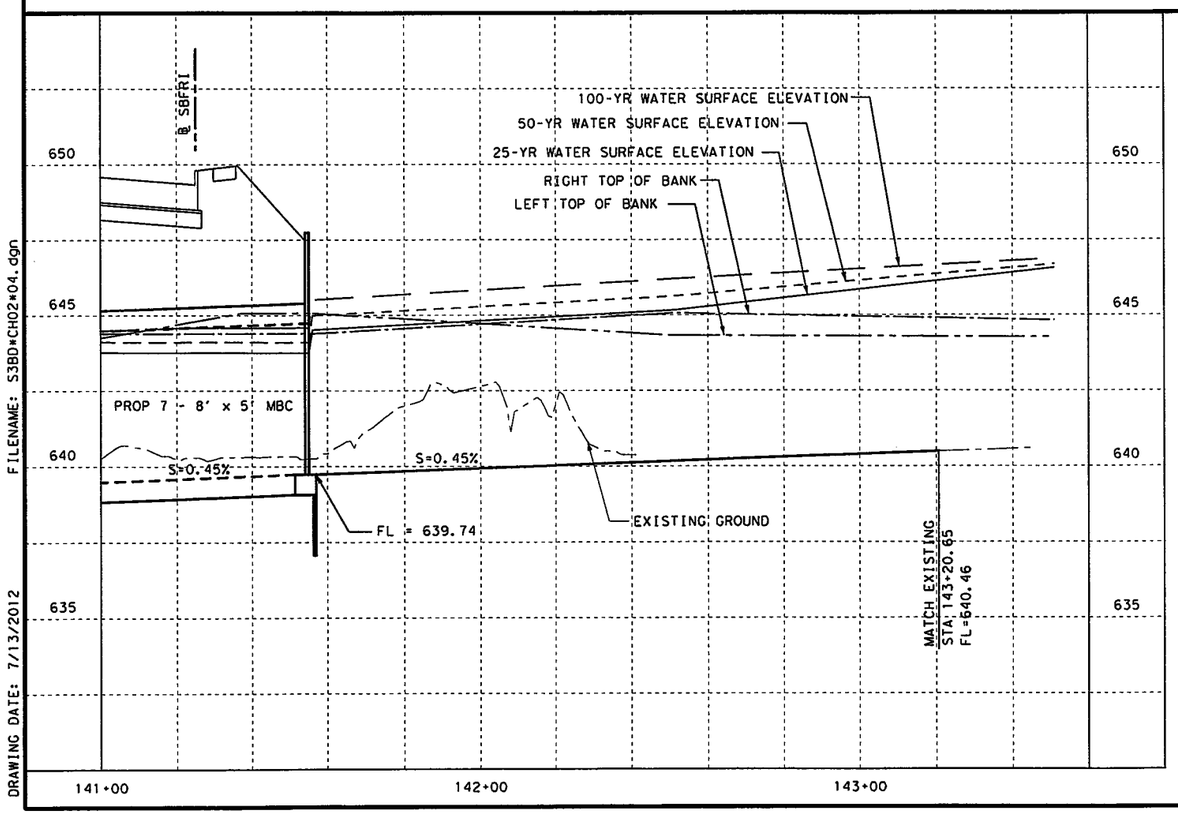

GRADING POINT TABLE				
POINT #	Description	* Sta.	Offset	Elev.
1	Face of Hdwl/Toe of Slope	141+27.74	33.50' Lt	639.74
2	PI - Toe of Slope	141+60.04	41.31' Lt	640.04
3	Toe of Slope	142+04.54	61.46' Lt	642.00
4	Toe of Slope	141+50.19	22.51' Lt	640.00
5	Toe of Slope	142+08.24	48.63' Lt	642.00
6	Toe of Slope	141+60.04	6.00' Lt	639.74
7	Face of Hdwl/Toe of Slope	141+92.34	33.50' Rt	639.74
8	PC - Toe of Slope	142+00.58	33.37' Rt	639.92
9	PT - Toe of Slope	142+44.38	21.82' Rt	640.12
10	PC - Toe of Slope	142+71.58	10.13' Rt	640.24
11	PT - Toe of Slope	142+94.19	10.13' Rt	640.34
12	Toe of Slope	143+20.65	6.00' Rt	640.46
* BL BFC-2				

Frequency	FLOW (cfs)	VEL (ft/sec)
25	1569	4.70
50	1826	4.90
100	2086	4.97

FOR COMPLETE HYDRAULIC DATA SEE REPORT ENTITLED 'DRAINAGE REPORT IH 35W FROM NORTH OF US 287 TO IH 820' DATED DECEMBER 2011 BY H & H RESOURCES, INC.

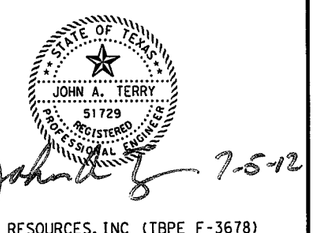

H & H RESOURCES, INC (TBPE F-3678)

H & H RESOURCES
CIVIL ENGINEERS
TBPE REGISTRATION NO. F-3678

Texas Department of Transportation
© 2012

IH 35W FROM NORTH TARRANT PKWY TO IH 820

CULVERT 2 CHANNEL LAYOUT
STREAM BFC2

SCALE: 1" = 40' H, 1" = 10' V — SHEET 4 OF 4

DESIGN	FED. RD. DIV. NO.	FEDERAL AID PROJECT NO.		HIGHWAY NO.
JKB	6	(SEE TITLE SHEET)		IH 35W
GRAPHICS CA	STATE	DISTRICT	COUNTY	SHEET NO.
CHECK JKB	TEXAS	FTW	TARRANT	1170
CHECK JT	CONTROL 0014	SECTION 16	JOB 255, ETC.	

FILENAME: S3BD*CH02*04.dgn

DRAWING DATE: 7/13/2012

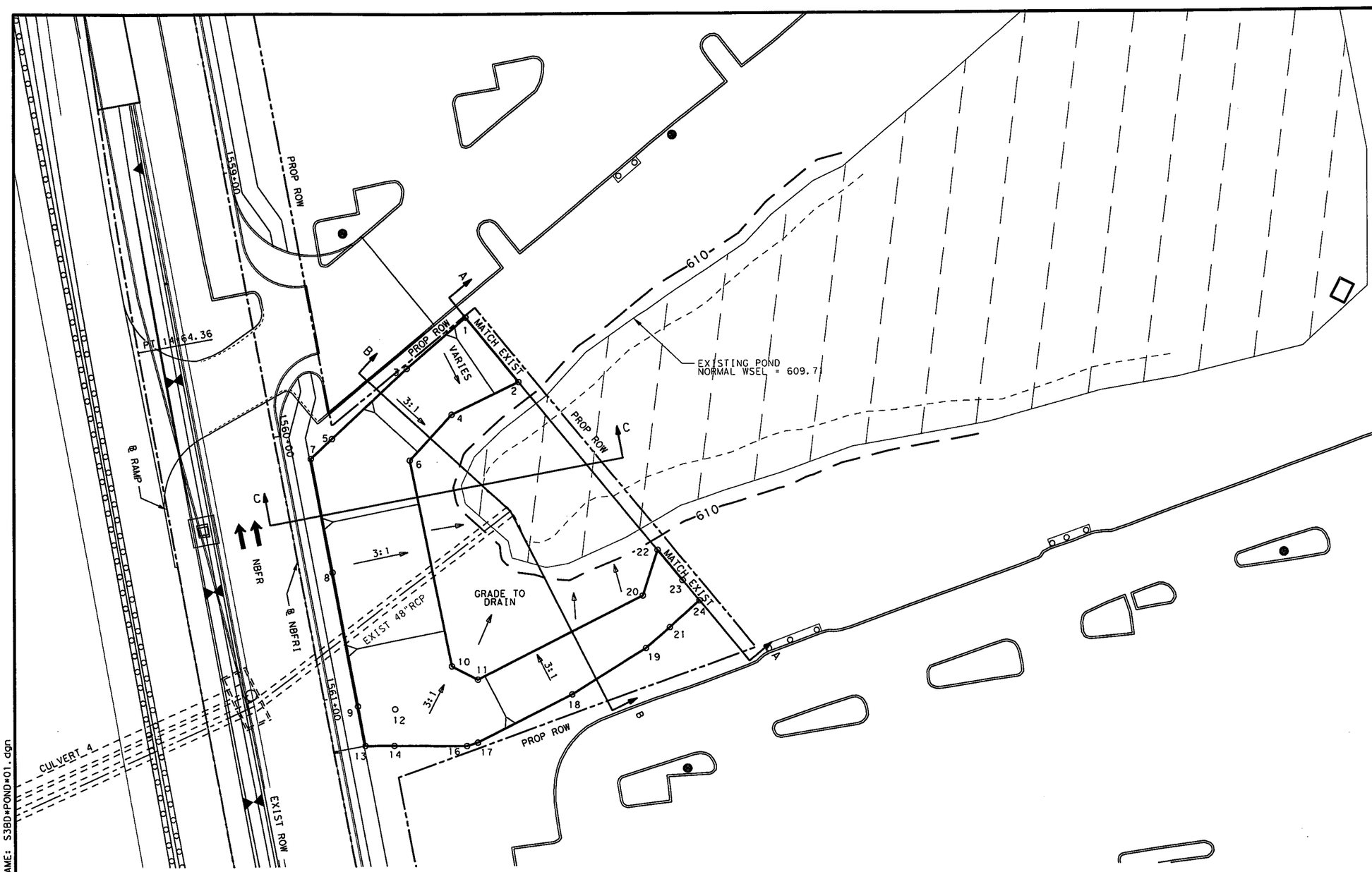

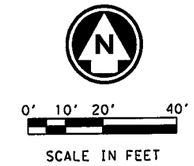

NOTES:

1. SEE SHEET 2 OF 3 FOR GRADING CONTROL POINT DATA AND CROSS SECTIONS.

STATE OF TEXAS
JOHN A. TERRY
51729
REGISTERED PROFESSIONAL ENGINEER

7-5-12

H & H RESOURCES, INC (TBPE F-3678)

H & H RESOURCES
CIVIL ENGINEERS
TBPE REGISTRATION NO. F-3678

Texas Department of Transportation
© 2012

IH 35W FROM NORTH TARRANT PKWY TO IH 820

DETENTION POND LAYOUT & DETAILS
POND LAYOUT

SCALE: 1" = 40'

SHEET 1 OF 3

DESIGN	FED. RD. DIV. NO.	FEDERAL AID PROJECT NO.		HIGHWAY NO.
JKB	6	(SEE TITLE SHEET)		IH 35W
GRAPHICS CA	STATE	DISTRICT	COUNTY	SHEET NO.
CHECK JKB	TEXAS	FTW	TARRANT	1171
CHECK JT	CONTROL	SECTION	JOB	
	0014	16	255	

FILENAME: S3BD*POND*01.dgn

DRAWING DATE: 7/13/2012

Culvert 4 Pond Mitigation Grading

Point	X	Y	IH 35W Sta.	Offset	Elev.
1	2333424.7377	6997260.2035	1559+67.16	278.77' Lt	619.00
2	2333444.5183	6997236.0516	1559+94.05	293.78' Lt	611.00
3	2333402.7131	6997241.1331	1559+81.70	253.62' Lt	619.00
4	2333419.4707	6997223.8964	1560+01.26	266.94' Lt	611.00
5	2333374.6274	6997214.9650	1560+01.88	221.22' Lt	620.00
6	2333403.8043	6997206.8018	1560+14.93	248.43' Lt	611.00
7	2333366.6700	6997207.5509	1560+07.61	212.05' Lt	623.00
8	2333374.6195	6997165.1173	1560+50.00	212.25' Lt	623.28
9	2333383.9953	6997115.0587	1561+00.00	212.69' Lt	623.50
10	2333419.2355	6997129.9191	1560+91.66	249.98' Lt	611.00
11	2333428.9422	6997124.9073	1560+98.14	258.66' Lt	611.00
12	2333397.9748	6997113.8862	1561+03.51	226.25' Lt	619.00
13	2333386.7748	6997100.2185	1561+15.79	213.00' Lt	623.69
14	2333397.6680	6997100.1699	1561+16.71	223.59' Lt	620.00
15	Omitted				
16	2333424.7746	6997100.0488	1561+21.39	250.67' Lt	619.00
17	2333428.8497	6997101.3210	1561+20.85	254.50' Lt	618.00
18	2333464.2151	6997119.2312	1561+09.56	292.42' Lt	618.00
19	2333491.6744	6997136.5003	1560+97.63	322.46' Lt	617.00
20	2333490.5886	6997156.1270	1560+78.65	324.81' Lt	611.00
21	2333500.5002	6997144.2760	1560+91.67	332.50' Lt	617.00
22	2333496.0733	6997173.1038	1560+63.34	333.20' Lt	611.00
23	2333505.3189	6997161.8150	1560+75.72	340.31' Lt	615.00
24	2333511.4948	6997154.2743	1560+83.98	345.07' Lt	616.00

Point 13 – 12' Lt NBFR Sta. 1561+19.79.

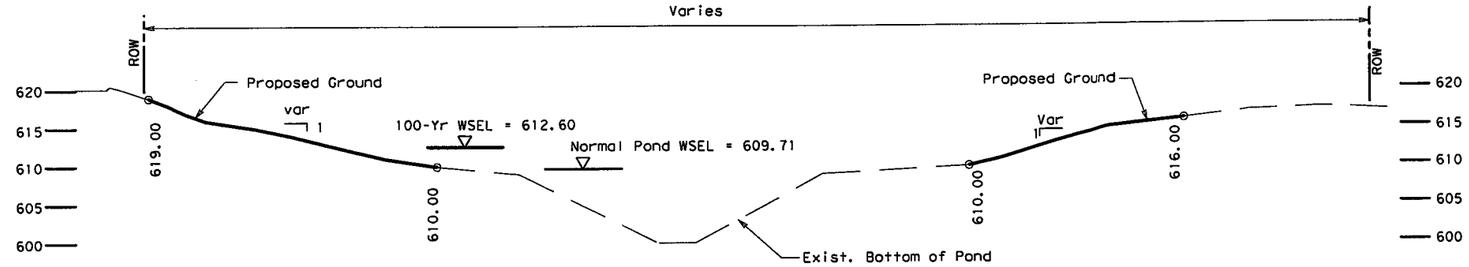

Section A-A

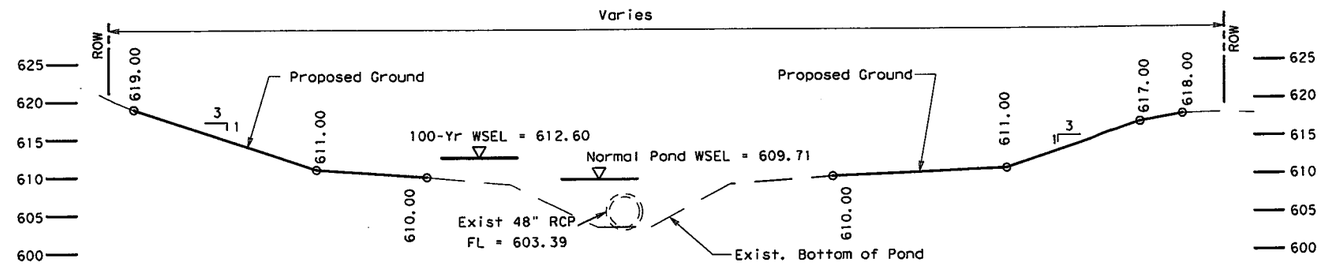

Section B-B

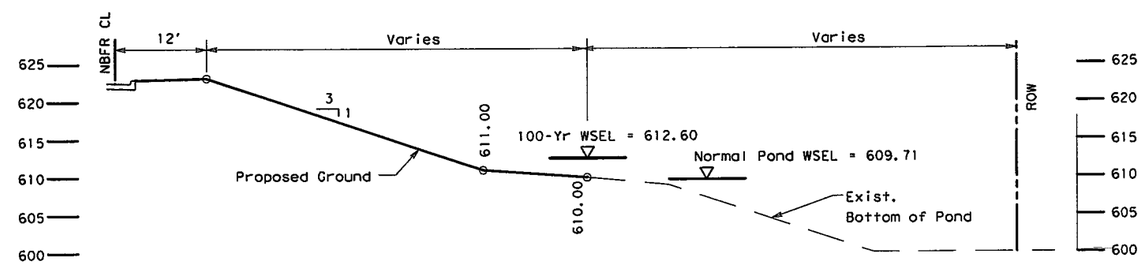

Section C-C

STATE OF TEXAS
JOHN A. TERRY
51729
REGISTERED
PROFESSIONAL ENGINEER

7-5-12

H & H RESOURCES, INC (TBPE F-3678)

H & H RESOURCES
CIVIL ENGINEERS
TBPE REGISTRATION NO. F-3678

Texas Department of Transportation
© 2012

IH 35W FROM NORTH TARRANT PKWY TO IH 820

DETENTION POND LAYOUT & DETAILS
POINT TABLES
& CROSS SECTIONS

SCALE: 1" = 50' SHEET 2 OF 3

DESIGN	FED. RD. DIV. NO.	FEDERAL AID PROJECT NO.		HIGHWAY NO.
JKB	6	(SEE TITLE SHEET)		IH 35W
GRAPHICS	STATE	DISTRICT	COUNTY	SHEET NO.
CA	TEXAS	FTW	TARRANT	1172
CHECK	CONTROL	SECTION	JOB	
JKB	0014	16	255, ETC.	
CHECK				
JT				

FILENAME: S38D*POND*02.dgn

DRAWING DATE: 7/13/2012

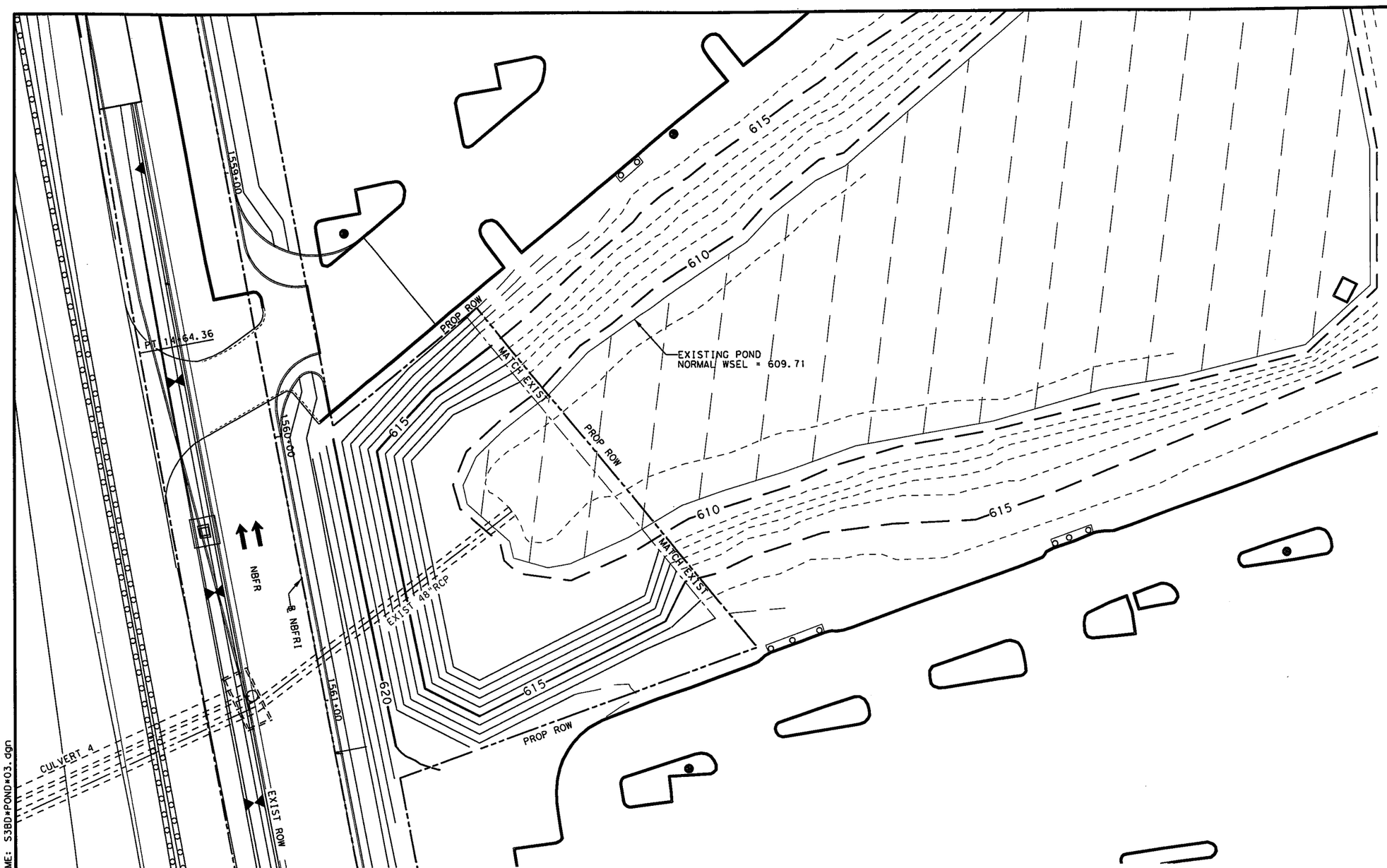

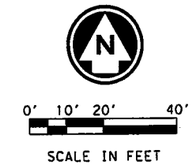

H & H RESOURCES, INC (TBPE F-3678)

H & H RESOURCES
CIVIL ENGINEERS
TBPE REGISTRATION NO. F-3678

Texas Department of Transportation
© 2012

IH 35W FROM NORTH TARRANT PKWY TO IH 820

DETENTION POND LAYOUT & DETAILS
CONTOUR LAYOUT

SCALE: 1" = 40'

SHEET 3 OF 3

DESIGN	FED. RD. DIV. NO.	FEDERAL AID PROJECT NO.		HIGHWAY NO.
JKB	6	(SEE TITLE SHEET)		IH 35W
GRAPHICS	STATE	DISTRICT	COUNTY	SHEET NO.
CA	TEXAS	FTW	TARRANT	
CHECK	CONTROL	SECTION	JOB	1173
JKB	0014	16	255	
CHECK				
JT				

FILENAME: S3BD*POND*03.dgn

DRAWING DATE: 7/13/2012

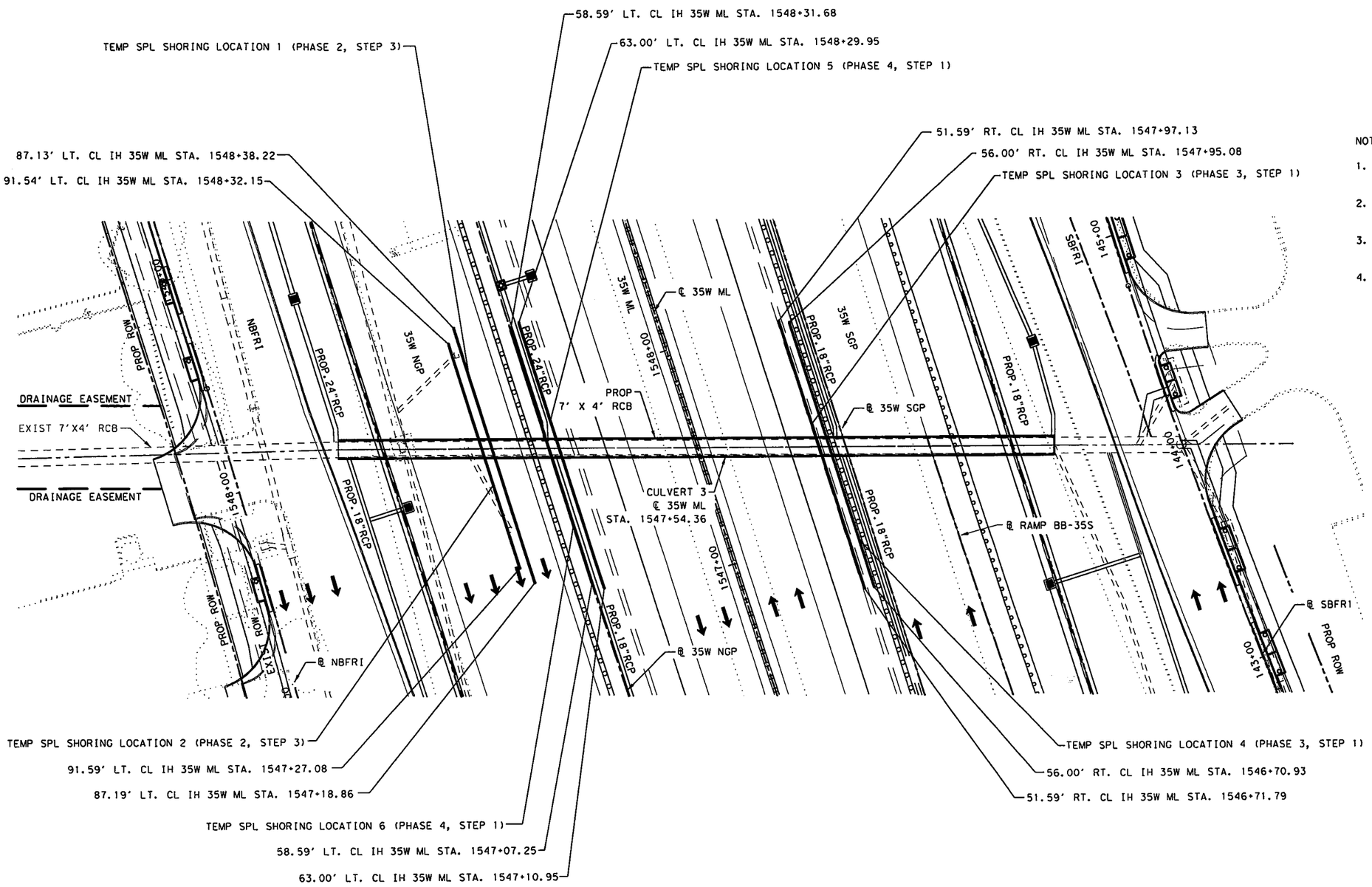

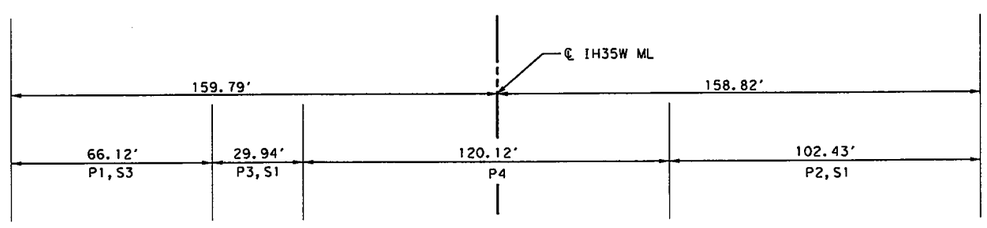

CULVERT 3 - SEQUENCE/LIMITS OF CONSTRUCTION
Px, Sy = TCP PHASE, STEP

HORZ 0' 25' 50'
SCALE IN FEET

NOTES:

1. LOCATION 1 SHORING TO BE INSTALLED PRIOR TO CONSTRUCTION OF PHASE 2, STEP 3 CULVERT.
2. LOCATION 3 SHORING TO BE INSTALLED PRIOR TO CONSTRUCTION OF PHASE 3, STEP 1 CULVERT.
3. LOCATION 5 SHORING TO BE INSTALLED PRIOR TO CONSTRUCTION OF PHASE 4, STEP 1 CULVERT.
4. REFER TO TRAFFIC CONTROL PLAN-CONSTRUCTION SEQUENCE NARRATIVE FOR ADDITIONAL INFORMATION.

STATE OF TEXAS
JOHN A. TERRY
51729
REGISTERED PROFESSIONAL ENGINEER

7-5-12

H & H RESOURCES, INC (TBPE F-3678)

H & H RESOURCES
CIVIL ENGINEERS
TBPE REGISTRATION NO. F-3678

Texas Department of Transportation
© 2012

IH 35W FROM NORTH TARRANT PKWY TO IH 820

CULVERT 3
TEMPORARY SPECIAL SHORING LAYOUT

SCALE: 1" = 50' H

SHEET 1 OF 2

DESIGN	FED. RD. DIV. NO.	FEDERAL AID PROJECT NO.		HIGHWAY NO.
JKB	6	(SEE TITLE SHEET)		IH 35W
GRAPHICS	STATE	DISTRICT	COUNTY	SHEET NO.
CA	TEXAS	FTW	TARRANT	1174
CHECK	CONTROL	SECTION	JOB	
JKB	0014	16	255, ETC.	
CHECK				
JT				

FILENAME: S3BD*TEMPSPLSHOR*01.dgn

DRAWING DATE: 7/13/2012

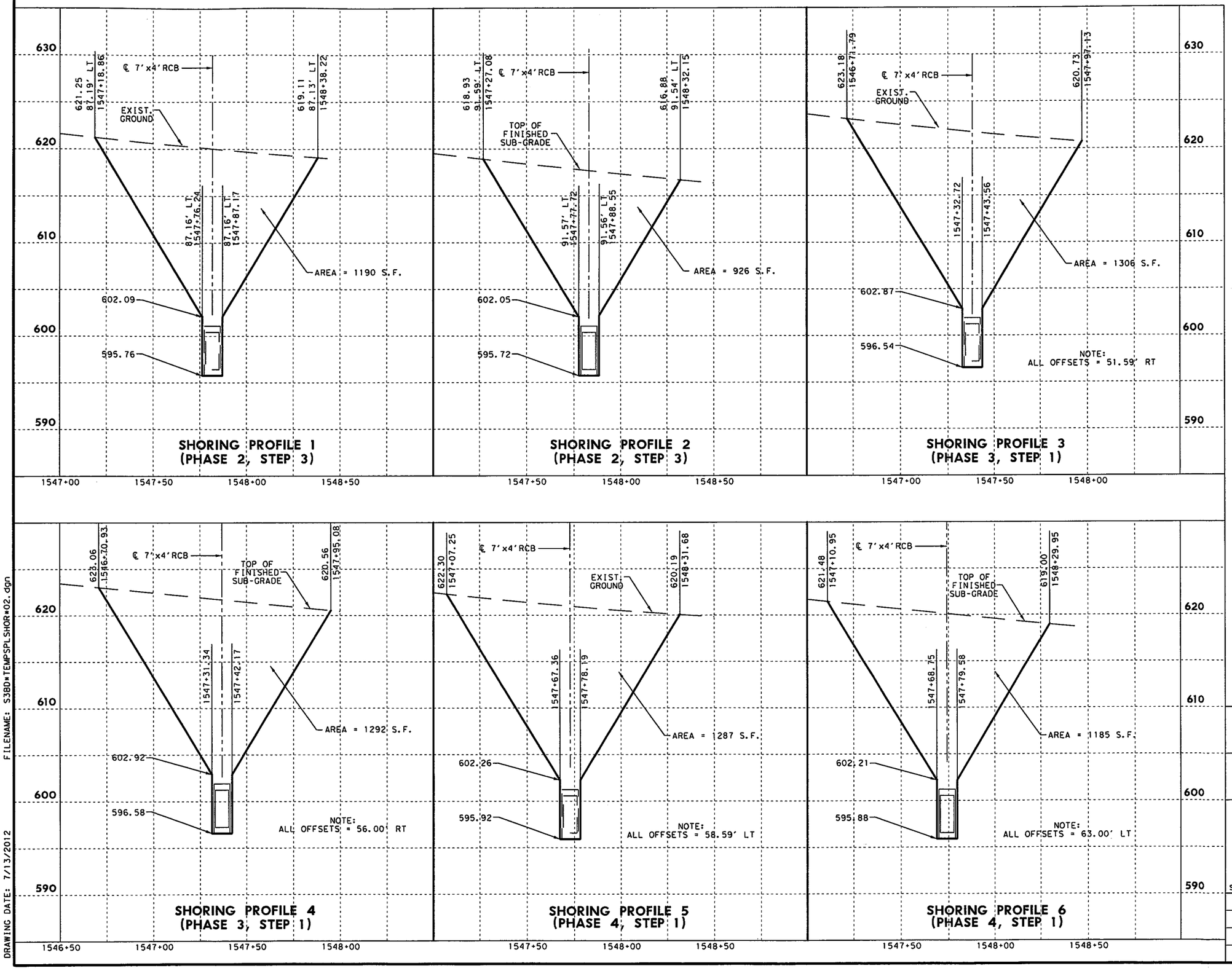

HORZ 0' 25' 50'
VERT 0' 5' 10'
SCALE IN FEET

NOTES:

1. ALL STATION AND OFFSET REFERENCES ARE TO ℄ IH35W ML, UNLESS OTHERWISE INDICATED.
2. LOCATION 1 SHORING TO BE INSTALLED PRIOR TO CONSTRUCTION OF PHASE 2, STEP 3 CULVERT.
3. LOCATION 3 SHORING TO BE INSTALLED PRIOR TO CONSTRUCTION OF PHASE 3, STEP 1 CULVERT.
4. LOCATION 5 SHORING TO BE INSTALLED PRIOR TO CONSTRUCTION OF PHASE 4, STEP 1 CULVERT.
5. REFER TO TRAFFIC CONTROL PLAN-CONSTRUCTION SEQUENCE NARRATIVE FOR ADDITIONAL INFORMATION.

STATE OF TEXAS
JOHN A. TERRY
51729
REGISTERED PROFESSIONAL ENGINEER

7-5-12

H & H RESOURCES, INC (TBPE F-3678)

H & H RESOURCES
CIVIL ENGINEERS
TBPE REGISTRATION NO. F-3678

Texas Department of Transportation
© 2012

IH 35W FROM NORTH TARRANT PKWY TO IH 820

CULVERT 3
TEMPORARY SPECIAL SHORING DETAILS

SCALE: 1" = 5' V

SHEET 2 OF 2

DESIGN	FED.RD. DIV.NO.	FEDERAL AID PROJECT NO.		HIGHWAY NO.
JKB	6	(SEE TITLE SHEET)		IH 35W
GRAPHICS CA	STATE	DISTRICT	COUNTY	SHEET NO.
CHECK JKB	TEXAS	FTW	TARRANT	1175
CHECK JT	CONTROL	SECTION	JOB	
	0014	16	255, ETC.	

FILENAME: S3BD*TEMPSPLSHOR*02.dgn

DRAWING DATE: 7/13/2012

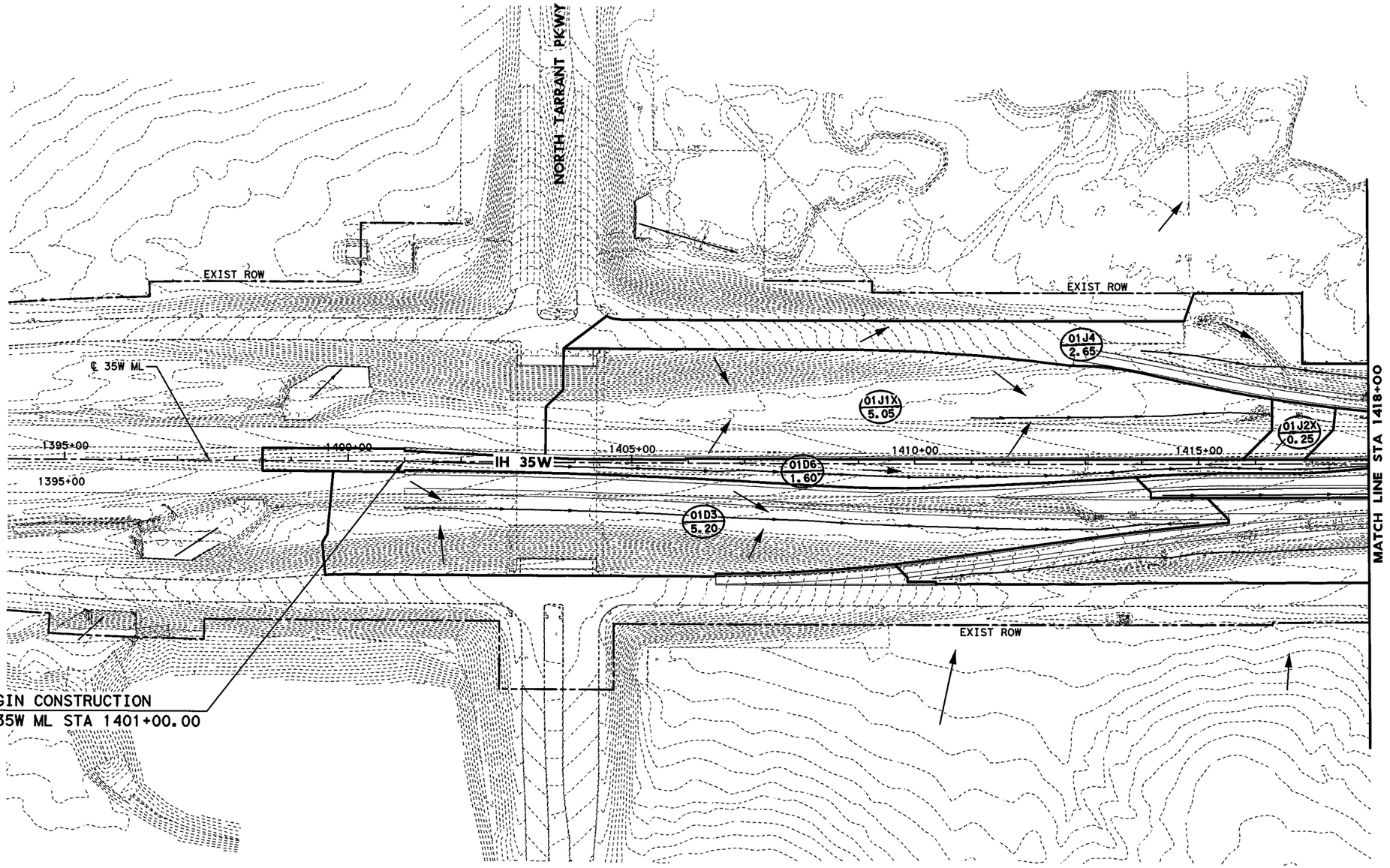

0' 50' 100' 200'

SCALE IN FEET

LEGEND:

AREA ID — XX
AREA (ACRES) — X.XX

DRAINAGE AREA BOUNDARY

FLOW DIRECTION

DITCH FLOWLINE

NODE NAMING CONVENTION:

RECEIVING STREAM OR CULVERT #
BF = BIG FOSSIL CREEK

DRAINAGE SYSTEM (A-Z)

NODE #

ADDITIONAL NODE DESIGNATION (A-Z)
X DESIGNATES EXIST NODE TO REMAIN

BF A 11 A

STATE OF TEXAS
SHAFEE YUSUF
94963
LICENSED
PROFESSIONAL ENGINEER

7/11/12

I. S. ENGINEERS, LLC
TBPE REG. # F-11657

Texas Department of Transportation
© 2012

IH 35W FROM NORTH TARRANT PKWY TO IH 820

INTERIOR DRAINAGE AREA MAP

BEGIN PROJECT TO STA 1418+00

SCALE: 1" = 200' SHEET 1 OF 10

DESIGN	FED.RD. DIV.NO.	FEDERAL AID PROJECT NO.		HIGHWAY NO.
BV	6	(SEE TITLE SHEET)		IH 35W
GRAPHICS ZS	STATE	DISTRICT	COUNTY	SHEET NO.
CHECK SY	TEXAS	FTW	TARRANT	1176
CHECK MNM	CONTROL 0014	SECTION 16	JOB 255, ETC.	

FILENAME: S3BDRA_01.dgn

DRAWING DATE: 7/11/2012

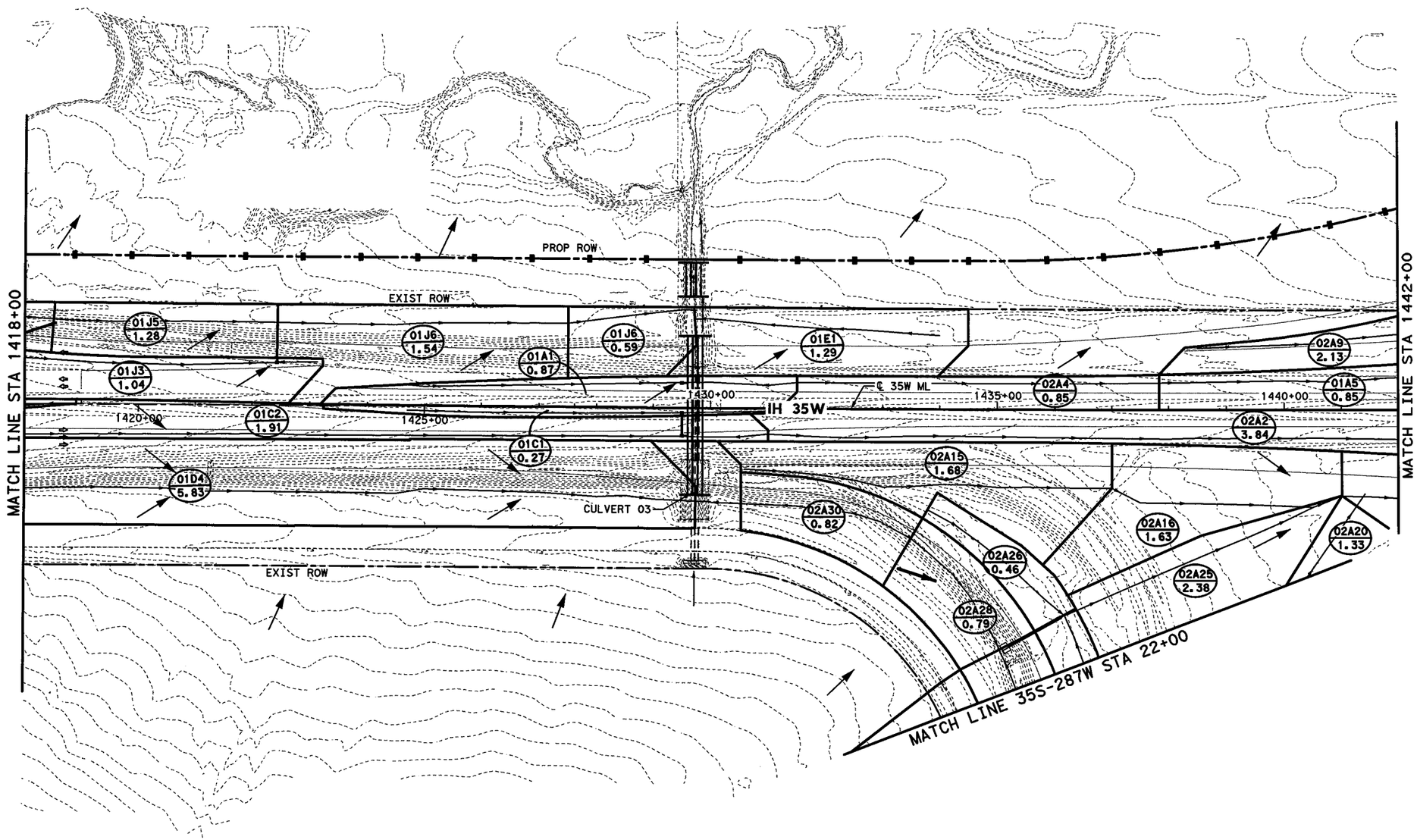

0' 50' 100' 200'

SCALE IN FEET

LEGEND:

AREA ID — XX
AREA (ACRES) — X.XX

DRAINAGE AREA BOUNDARY

FLOW DIRECTION

DITCH FLOWLINE

NODE NAMING CONVENTION:

RECEIVING STREAM OR CULVERT #
BF = BIG FOSSIL CREEK

DRAINAGE SYSTEM (A-Z)

NODE #

ADDITIONAL NODE DESIGNATION (A-Z)
X DESIGNATES EXIST NODE TO REMAIN

BF A 11 A

STATE OF TEXAS
SHAFEE YUSUF
94963
LICENSED
PROFESSIONAL ENGINEER

7/11/12

I. S. ENGINEERS, LLC
TBPE REG. # F-11657

Texas Department of Transportation
© 2012

IH 35W FROM NORTH TARRANT PKWY TO IH 820

INTERIOR DRAINAGE AREA MAP

STA 1418+00 TO STA 1442+00

SCALE: 1" = 200' SHEET 2 OF 10

DESIGN	FED.RD. DIV.NO.	FEDERAL AID PROJECT NO.		HIGHWAY NO.
BV	6	(SEE TITLE SHEET)		IH 35W
GRAPHICS	STATE	DISTRICT	COUNTY	SHEET NO.
ZS	TEXAS	FTW	TARRANT	
CHECK	CONTROL	SECTION	JOB	
SY	0014	16	255, ETC.	1177
CHECK				
MNM				

FILENAME: S3BDRA_02.dgn

DRAWING DATE: 7/11/2012

END CSJ: 0081-12-045
BEGIN CSJ: 0014-16-255
℄ 35W ML STA 1445+62.10

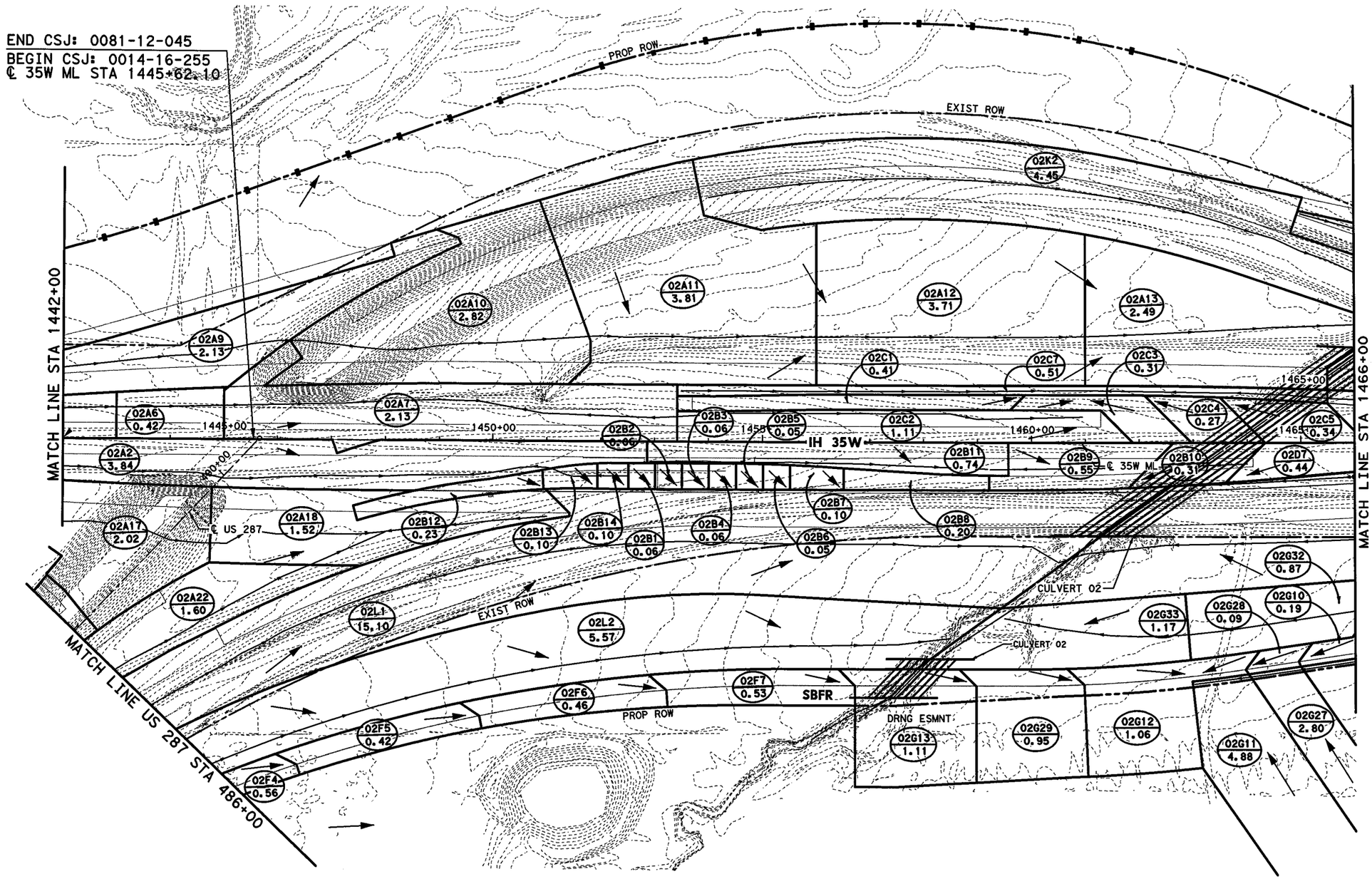

0' 50' 100' 200'
SCALE IN FEET

LEGEND:

AREA ID — XX
AREA (ACRES) — X.XX

DRAINAGE AREA BOUNDARY

FLOW DIRECTION

DITCH FLOWLINE

NODE NAMING CONVENTION:

- RECEIVING STREAM OR CULVERT # — BF
- BF = BIG FOSSIL CREEK
- DRAINAGE SYSTEM (A-Z) — A
- NODE # — 11
- ADDITIONAL NODE DESIGNATION (A-Z) X DESIGNATES EXIST NODE TO REMAIN — A

BF A 11 A

STATE OF TEXAS
SHAFEE YUSUF
94963
LICENSED
PROFESSIONAL ENGINEER
7/11/12

I. S. ENGINEERS, LLC
TBPE REG. # F-11657

Texas Department of Transportation
© 2012

IH 35W FROM NORTH TARRANT PKWY TO IH 820

INTERIOR DRAINAGE AREA MAP

STA 1442+00 TO STA 1466+00

SCALE: 1" = 200'

SHEET 3 OF 10

DESIGN	FED.RD. DIV.NO.	FEDERAL AID PROJECT NO.		HIGHWAY NO.
GRAPHICS	6	(SEE TITLE SHEET)		IH 35W
	STATE	DISTRICT	COUNTY	SHEET NO.
CHECK	TEXAS	FTW	TARRANT	1178
CHECK	CONTROL	SECTION	JOB	
	0014	16	255, ETC.	

FILENAME: S3BDRA_03.dgn

DRAWING DATE: 7/11/2012

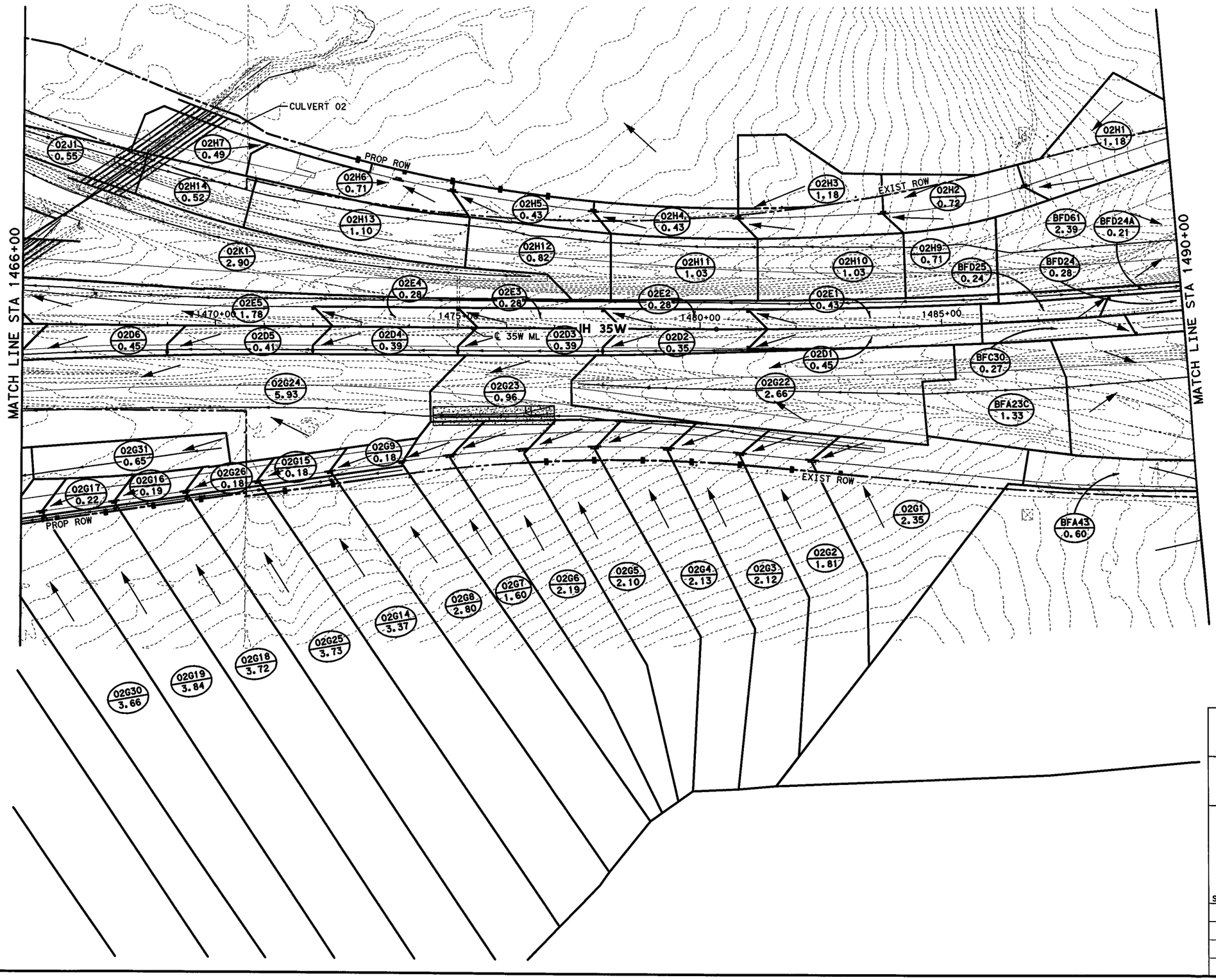

0' 50' 100' 200'

SCALE IN FEET

LEGEND:

AREA ID — XX
AREA (ACRES) — X.XX

DRAINAGE AREA BOUNDARY

FLOW DIRECTION

DITCH FLOWLINE

NODE NAMING CONVENTION:

RECEIVING STREAM OR CULVERT #
BF = BIG FOSSIL CREEK

DRAINAGE SYSTEM (A-Z)

NODE #

ADDITIONAL NODE DESIGNATION (A-Z)
X DESIGNATES EXIST NODE TO REMAIN

BF A 11 A

STATE OF TEXAS
SHAFEE YUSUF
94963
LICENSED
PROFESSIONAL ENGINEER

7/11/12

I. S. ENGINEERS, LLC
TBPE REG. # F-11657

Texas Department of Transportation
© 2012

IH 35W FROM NORTH TARRANT PKWY TO IH 820

INTERIOR DRAINAGE AREA MAP

STA 1466+00 TO STA 1490+00

SCALE: 1" = 200'

SHEET 4 OF 10

DESIGN	FED.RD. DIV.NO.	FEDERAL AID PROJECT NO.		HIGHWAY NO.
BV	6	(SEE TITLE SHEET)		IH 35W
GRAPHICS	STATE	DISTRICT	COUNTY	SHEET NO.
ZS	TEXAS	FTW	TARRANT	
CHECK	CONTROL	SECTION	JOB	
SY	0014	16	255, ETC.	1179
CHECK				
MNM				

FILENAME: S3BDRA_04.dgn

DRAWING DATE: 7/11/2012

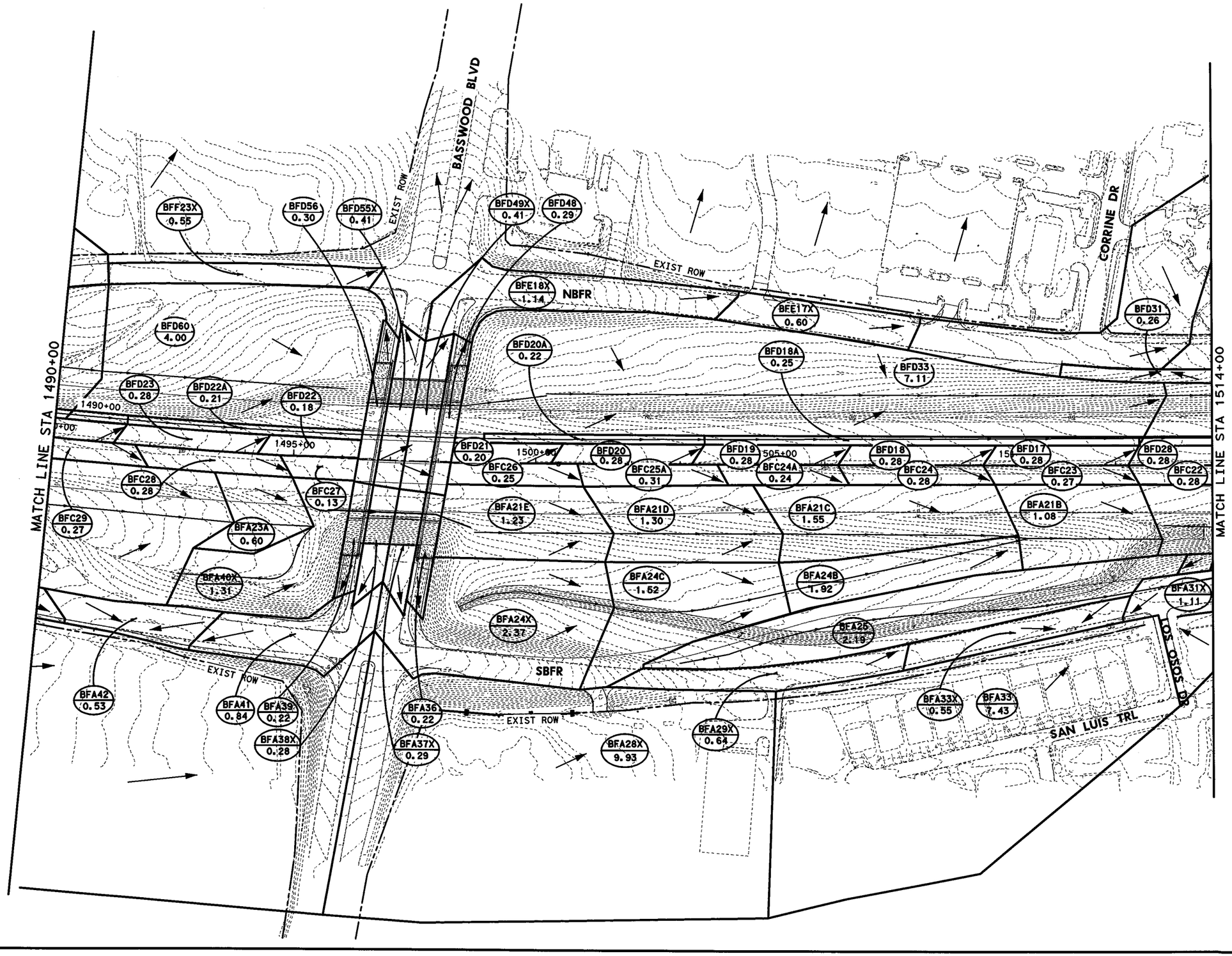

0' 50' 100' 200'

SCALE IN FEET

LEGEND:

AREA ID — XX
AREA (ACRES) — X.XX

DRAINAGE AREA BOUNDARY

FLOW DIRECTION

DITCH FLOWLINE

NODE NAMING CONVENTION:

- RECEIVING STREAM OR CULVERT # — BF = BIG FOSSIL CREEK
- DRAINAGE SYSTEM (A-Z) — A
- NODE # — 11
- ADDITIONAL NODE DESIGNATION (A-Z) X DESIGNATES EXIST NODE TO REMAIN — A

BF A 11 A

STATE OF TEXAS
B. VANDERWALT
81580
LICENSED
PROFESSIONAL ENGINEER

7/11/2012

I. S. ENGINEERS, LLC

TBPE REG. # F-11657

Texas Department of Transportation

© 2012

IH 35W FROM NORTH TARRANT PKWY TO IH 820

INTERIOR DRAINAGE AREA MAP

STA 1490+00 TO STA 1514+00

SCALE: 1" = 200'

SHEET 5 OF 10

DESIGN	FED.RD. DIV.NO.	FEDERAL AID PROJECT NO.		HIGHWAY NO.
BV	6	(SEE TITLE SHEET)		IH 35W
GRAPHICS	STATE	DISTRICT	COUNTY	SHEET NO.
ZS	TEXAS	FTW	TARRANT	
CHECK	CONTROL	SECTION	JOB	
SY	0014	16	255, ETC.	1180
CHECK				
MNM				

DRAWING DATE: 7/11/2012 FILENAME: S3BDRA_05.dgn

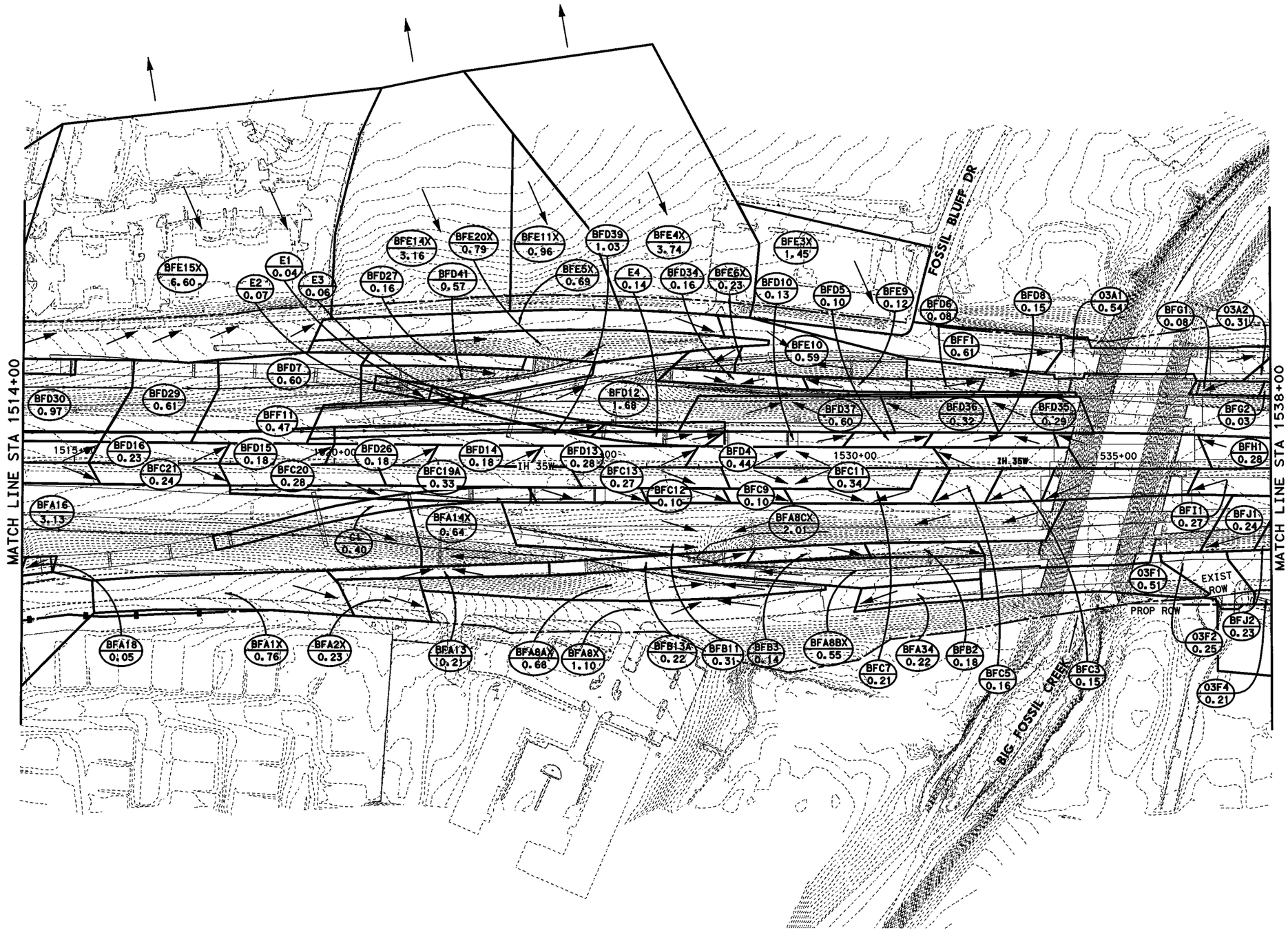

0' 50' 100' 200'

SCALE IN FEET

LEGEND:

AREA ID — XX
AREA (ACRES) — X.XX

DRAINAGE AREA BOUNDARY

FLOW DIRECTION

DITCH FLOWLINE

NODE NAMING CONVENTION:

- RECEIVING STREAM OR CULVERT # — BF = BIG FOSSIL CREEK
- DRAINAGE SYSTEM (A-Z)
- NODE #
- ADDITIONAL NODE DESIGNATION (A-Z) X DESIGNATES EXIST NODE TO REMAIN

BF A 11 A

STATE OF TEXAS
B. VANDERWALT
81580
LICENSED
PROFESSIONAL ENGINEER

B. Vanderwalt P.E.
7/11/2012

I. S. ENGINEERS, LLC

TBPE REG. # F-11657

Texas Department of Transportation

© 2012

IH 35W FROM NORTH TARRANT PKWY TO IH 820

INTERIOR DRAINAGE AREA MAP

STA 1514+00 TO STA 1538+00

SCALE: 1" = 200'

SHEET 6 OF 10

DESIGN	FED.RD. DIV.NO.	FEDERAL AID PROJECT NO.		HIGHWAY NO.
BV	6	(SEE TITLE SHEET)		IH 35W
GRAPHICS	STATE	DISTRICT	COUNTY	SHEET NO.
ZS	TEXAS	FTW	TARRANT	1181
CHECK	CONTROL	SECTION	JOB	
SY	0014	16	255, ETC.	
CHECK				
MNM				

FILENAME: S3BDRA_06.dgn

DRAWING DATE: 7/11/2012

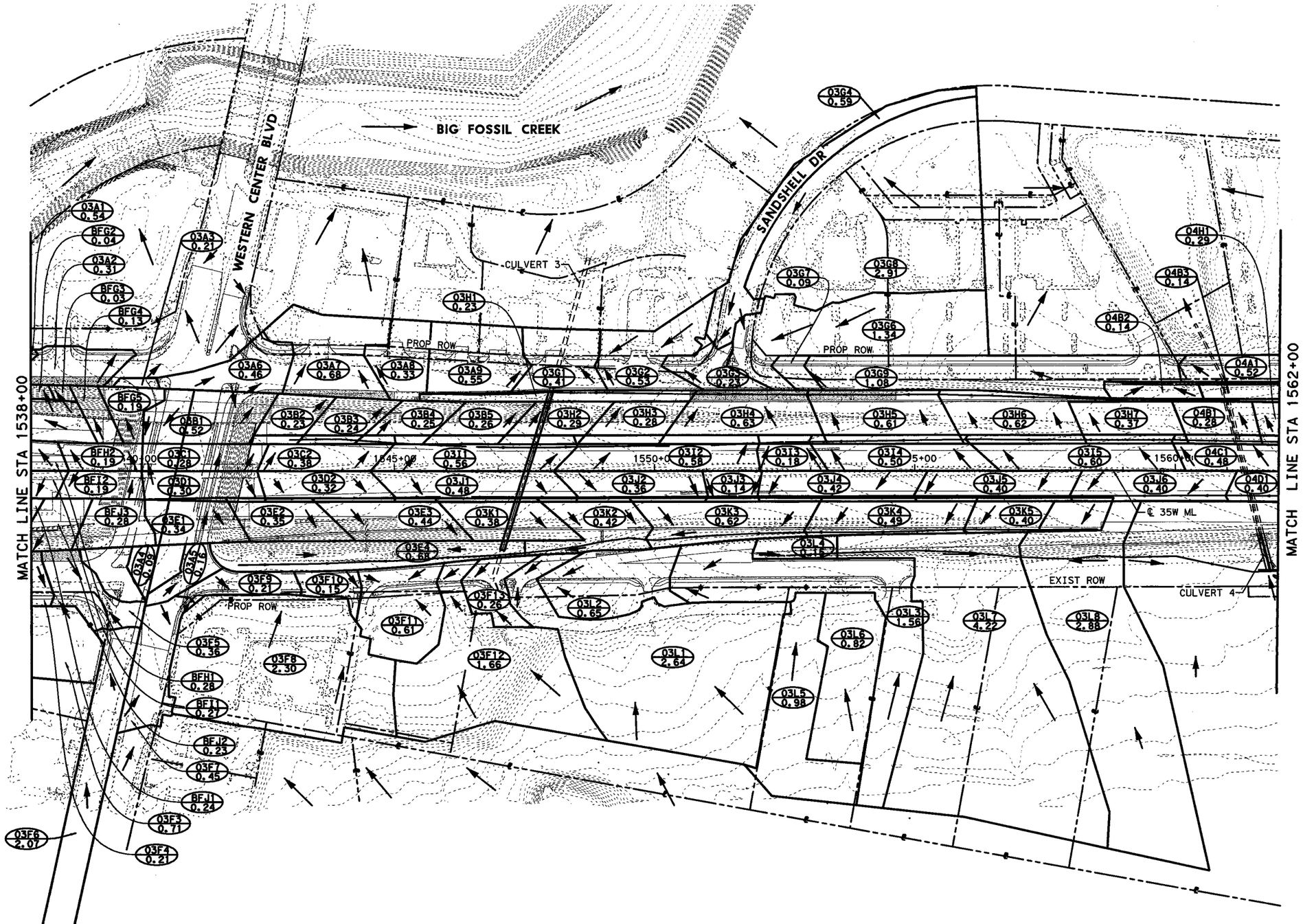

HORZ 0' 50' 100' 200'

SCALE IN FEET

LEGEND:

AREA ID — XX
AREA (ACRES) — X.XX

DRAINAGE AREA BOUNDARY

FLOW DIRECTION

DITCH FLOWLINE

NODE NAMING CONVENTION:

- RECEIVING STREAM OR CULVERT # — BF
- BF = BIG FOSSIL CREEK
- DRAINAGE SYSTEM (A-Z) — A
- NODE # — 11
- ADDITIONAL NODE DESIGNATION (A-Z) — A
- X DESIGNATES EXIST NODE TO REMAIN

STATE OF TEXAS
THOMAS E. T. COCHILL
87665
LICENSED
PROFESSIONAL ENGINEER

Thomas E. T. Cochill
7/6/12

CP&Y, INC.
TBPE REGISTRATION NO. F-1741

Texas Department of Transportation
© 2012

IH 35W FROM NORTH TARRANT PKWY TO IH 820

INTERIOR DRAINAGE AREA MAP

STA 1538+00 TO STA 1562+00

SCALE 1" = 200'

SHEET 7 OF 10

DESIGN	FED. RD. DIV. NO.	FEDERAL AID PROJECT NO.		HIGHWAY NO.
CPY	6	(SEE TITLE SHEET)		IH 35W
GRAPHICS CPY	STATE	DISTRICT	COUNTY	SHEET NO.
CHECK CPY	TEXAS	FTW	TARRANT	1182
CHECK CPY	CONTROL 0014	SECTION 16	JOB 255, ETC.	

DRAWING DATE: 7/13/2012 FILENAME: S3BDAM07.dgn

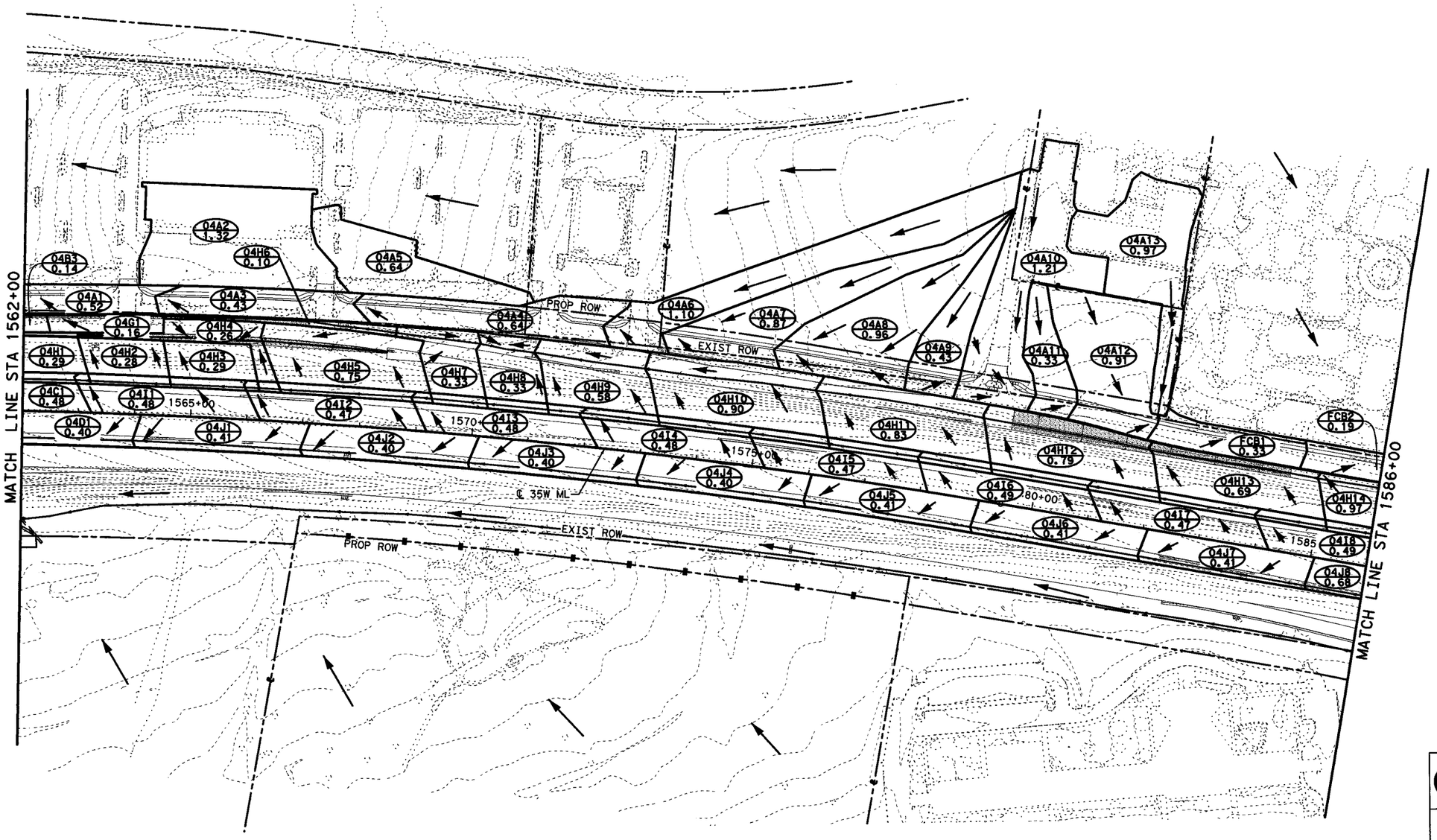

HORZ 0' 50' 100' 200'

SCALE IN FEET

LEGEND:

AREA ID — XX
AREA (ACRES) — X.XX

DRAINAGE AREA BOUNDARY

FLOW DIRECTION

DITCH FLOWLINE

NODE NAMING CONVENTION:

BF A 11 A

- BF: RECEIVING STREAM OR CULVERT # — BF = BIG FOSSIL CREEK
- A: DRAINAGE SYSTEM (A-Z)
- 11: NODE #
- A: ADDITIONAL NODE DESIGNATION (A-Z) X DESIGNATES EXIST NODE TO REMAIN

STATE OF TEXAS
THOMAS E. T. COCHILL
87665
LICENSED
PROFESSIONAL ENGINEER

Thomas E. T. Cochill
7/6/12

CP&Y, INC.
TBPE REGISTRATION NO. F-1741

Texas Department of Transportation
© 2012

IH 35W FROM NORTH TARRANT PKWY TO IH 820

INTERIOR DRAINAGE AREA MAP

STA 1562+00 TO STA 1586+00

SCALE 1" = 200' — SHEET 8 OF 10

DESIGN	FED.RD. DIV.NO.	FEDERAL AID PROJECT NO.		HIGHWAY NO.
CPY	6	(SEE TITLE SHEET)		IH 35W
GRAPHICS CPY	STATE	DISTRICT	COUNTY	SHEET NO.
CHECK CPY	TEXAS	FTW	TARRANT	1183
CHECK CPY	CONTROL 0014	SECTION 16	JOB 255, ETC.	

FILENAME: S3BDAM08.dgn

DRAWING DATE: 7/13/2012

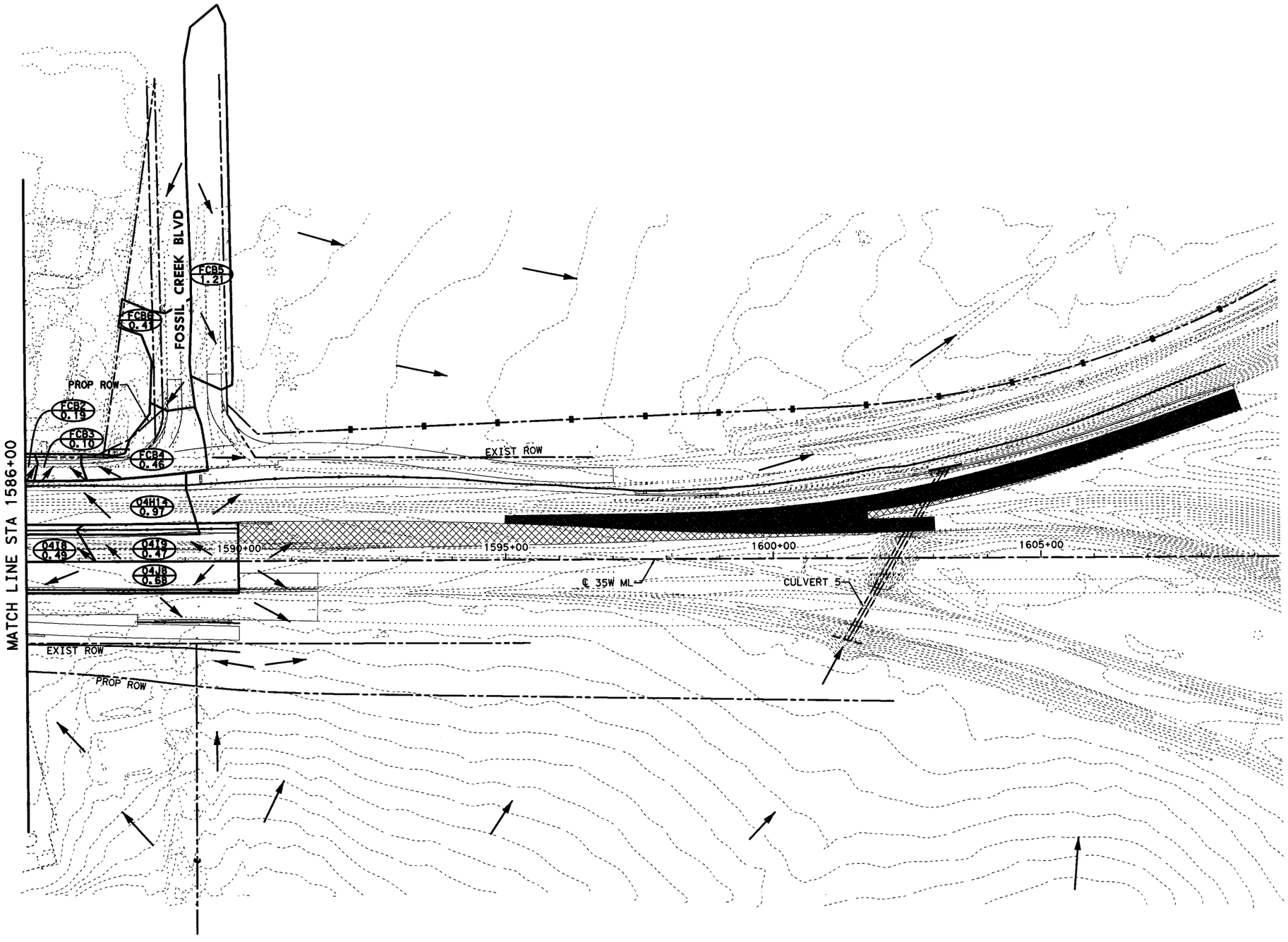

HORZ 0' 50' 100' 200'

SCALE IN FEET

LEGEND:

AREA ID — XX
AREA (ACRES) — X.XX

DRAINAGE AREA BOUNDARY

FLOW DIRECTION

DITCH FLOWLINE

NODE NAMING CONVENTION:

BF A 11 A

- RECEIVING STREAM OR CULVERT # BF = BIG FOSSIL CREEK
- DRAINAGE SYSTEM (A-Z)
- NODE #
- ADDITIONAL NODE DESIGNATION (A-Z) X DESIGNATES EXIST NODE TO REMAIN

STATE OF TEXAS
THOMAS E. T. COCHILL
87665
LICENSED
PROFESSIONAL ENGINEER

Thomas E. T. Cochill
7/6/12

CP&Y, INC.
TBPE REGISTRATION NO. F-1741

Texas Department of Transportation
© 2012

IH 35W FROM NORTH TARRANT PKWY TO IH 820

INTERIOR DRAINAGE AREA MAP

STA 1586+00 TO END PROJECT

SCALE 1" = 200'

SHEET 9 OF 10

DESIGN	FED. RD. DIV. NO.	FEDERAL AID PROJECT NO.		HIGHWAY NO.
CPY	6	(SEE TITLE SHEET)		IH 35W
GRAPHICS	STATE	DISTRICT	COUNTY	SHEET NO.
CPY	TEXAS	FTW	TARRANT	
CHECK	CONTROL	SECTION	JOB	
CPY	0014	16	255, ETC.	1184

FILENAME: S3BDAM09.dgn

DRAWING DATE: 7/13/2012

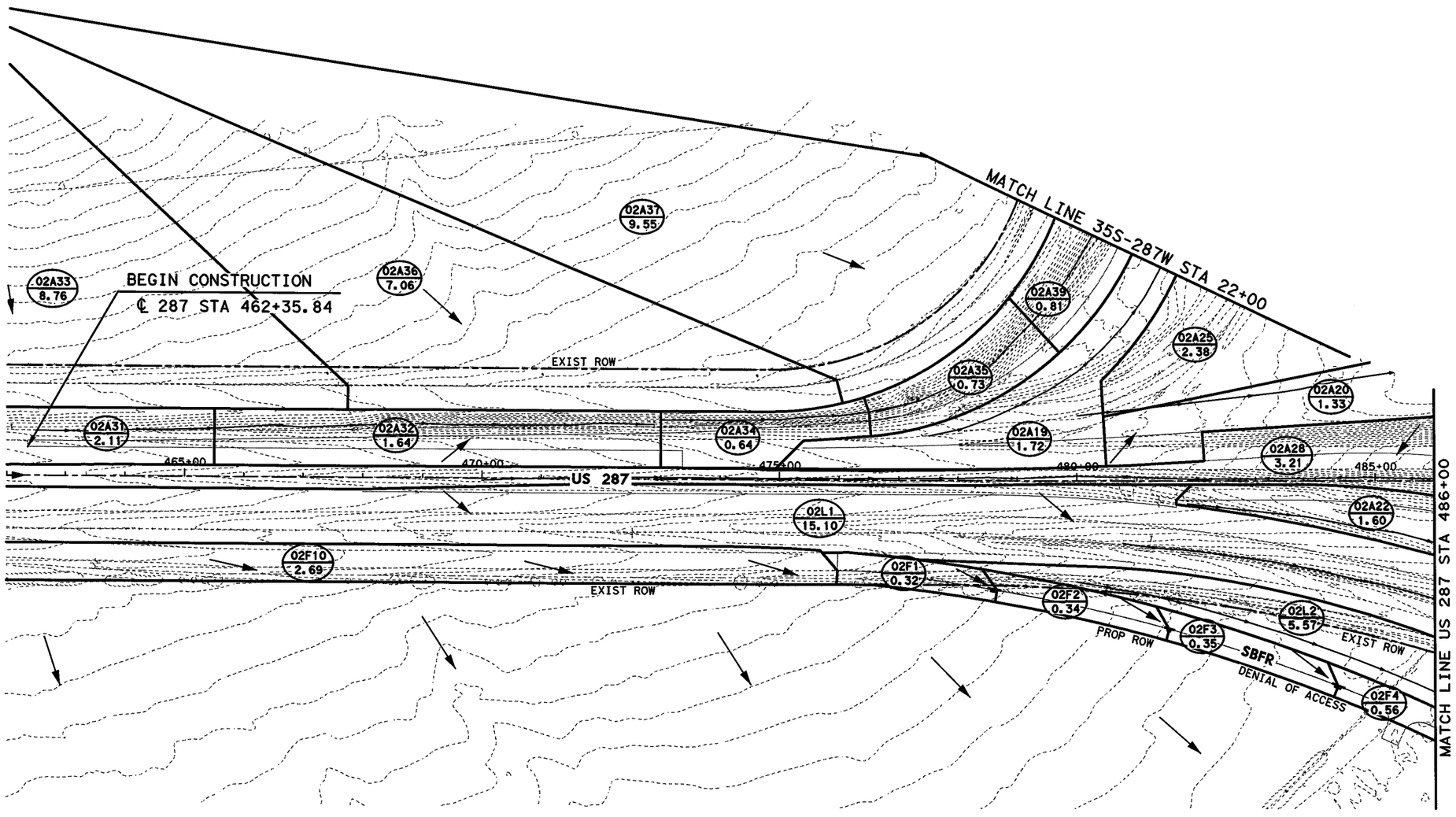

0' 50' 100' 200'

SCALE IN FEET

LEGEND:

AREA ID — XX
AREA (ACRES) — X.XX

DRAINAGE AREA BOUNDARY

FLOW DIRECTION

DITCH FLOWLINE

NODE NAMING CONVENTION:

BF A 11 A

- BF — RECEIVING STREAM OR CULVERT # (BF = BIG FOSSIL CREEK)
- A — DRAINAGE SYSTEM (A-Z)
- 11 — NODE #
- A — ADDITIONAL NODE DESIGNATION (A-Z) X DESIGNATES EXIST NODE TO REMAIN

STATE OF TEXAS
SHAFEE YUSUF
94963
LICENSED
PROFESSIONAL ENGINEER
7/11/12

I. S. ENGINEERS, LLC
TBPE REG. # F-11657

Texas Department of Transportation
© 2012

IH 35W FROM NORTH TARRANT PKWY TO IH 820

INTERIOR DRAINAGE AREA MAP

STA 462+00 TO STA 486+00

SCALE: 1" = 200' SHEET 10 OF 10

DESIGN	FED.RD. DIV.NO.	FEDERAL AID PROJECT NO.		HIGHWAY NO.
BV	6	(SEE TITLE SHEET)		IH 35W
GRAPHICS	STATE	DISTRICT	COUNTY	SHEET NO.
ZS	TEXAS	FTW	TARRANT	
CHECK	CONTROL	SECTION	JOB	
SY	0014	16	255, ETC.	1185
CHECK				
MNM				

DRAWING DATE: 7/11/2012 FILENAME: S3BDRA_10.dgn

RUNOFF COMPUTATIONS, CSJ: 0014-16-255

DRAINAGE ID	COMPOSITE C. VALUE	DRAINAGE AREA (ACRES)	TIME CONC (MIN)	INTENSITY (IN/HR)	Q (CFS)
BFA34	0.73	0.22	10.00	7.98	1.25
BFA2X	0.63	0.23	10.00	7.98	1.15
BFA8X	0.70	1.10	10.00	7.98	6.16
BFA8AX	0.73	0.68	10.00	7.98	3.97
BFA8BX	0.52	0.55	10.00	7.98	2.27
BFA1X	0.90	0.76	10.00	7.98	5.48
BFA8CX	0.82	2.01	18.00	6.03	9.94
BFA14X	0.80	0.64	10.00	7.98	4.09
BFA16	0.65	3.13	16.00	6.41	13.07
BFA13	0.90	0.21	10.00	7.98	1.52
BFA18	0.90	0.05	10.00	7.98	0.33
BFA19	0.90	0.05	10.00	7.98	0.38
BFA21B	0.63	1.08	10.00	7.98	5.47
BFA21C	0.68	1.55	10.00	7.98	8.40
BFA31X	0.77	1.11	10.00	7.98	6.88
BFA33	0.50	7.43	15.00	6.62	24.42
BFA33X	0.80	0.55	10.00	7.98	3.56
BFA21D	0.62	1.30	10.00	7.98	6.45
BFA25	0.56	2.19	15.00	6.62	8.11
BFA24B	0.49	1.92	10.00	7.98	7.51
BFA21E	0.62	1.23	10.00	7.98	6.05
BFA24C	0.41	1.52	10.00	7.98	5.00
BFA29X	0.30	0.64	10.00	7.98	1.56
BFA24X	0.50	2.37	10.00	7.98	9.54
BFA28X	0.62	9.93	15.00	6.62	40.74
BFA37X	0.95	0.29	10.00	7.98	2.20
BFA35X	0.63	16.96	15.00	6.62	70.52
BFA40X	0.43	1.31	10.00	7.98	4.46
BFA23A	0.64	0.60	10.00	7.98	3.06
BFA36	0.95	0.22	10.00	7.98	1.65
BFA38X	0.95	0.28	10.00	7.98	2.13
BFA41	0.86	0.84	10.00	7.98	5.74
BFA42	0.90	0.53	10.00	7.98	3.77
BFA23B	0.53	3.67	15.00	6.62	12.81
BFA39	0.95	0.22	10.00	7.98	1.65
BFA43	0.80	0.60	10.00	7.98	3.83
BFA23C	0.53	1.33	15.00	6.62	4.71
BFC4	0.90	0.18	10.00	7.98	1.32
BFC8	0.90	0.14	10.00	7.98	1.02
BFC10	0.90	0.52	10.00	7.98	3.72
BFC7	0.90	0.21	10.00	7.98	1.50
BFC10A	0.90	0.22	10.00	7.98	1.55
BFC5	0.89	0.16	10.00	7.98	1.11
BFC9	0.88	0.10	10.00	7.98	0.72
BFC3	0.90	0.15	10.00	7.98	1.09
BFC11	0.90	0.34	10.00	7.98	2.41
BFC1	0.95	0.35	10.00	7.98	2.64
BFC13	0.90	0.27	10.00	7.98	2.67
BFC12	0.88	0.10	10.00	7.98	0.70
BFC14	0.90	0.12	10.00	7.98	0.88
BFC19A	0.90	0.33	10.00	7.98	1.63
BFC18	0.90	0.25	10.00	7.98	1.77
BFC20	0.90	0.28	10.00	7.98	2.01
BFC21	0.90	0.24	10.00	7.98	1.70
BFC22	0.90	0.28	10.00	7.98	1.98
BFC23	0.90	0.27	10.00	7.98	1.95
BFC24	0.90	0.28	10.00	7.98	2.00
BFC24A	0.90	0.24	10.00	7.98	1.73
BFC25A	0.90	0.31	10.00	7.98	2.21
BFC26	0.90	0.25	10.00	7.98	1.83
BFC27	0.90	0.13	10.00	7.98	0.96
BFC28	0.90	0.28	10.00	7.98	1.99
BFC29	0.90	0.27	10.00	7.98	1.92
BFC30	0.90	0.27	10.00	7.98	1.96
BFD35	0.90	0.29	10.00	7.98	2.10
BFD6	0.82	0.08	10.00	7.98	0.52
BFD36	0.90	0.32	10.00	7.98	2.29
BFD37	0.90	0.60	10.00	7.98	4.33
BFD34	0.36	0.16	10.00	7.98	0.45
BFD12	0.72	1.68	17.00	6.22	7.58
BFD39	0.90	1.03	17.00	6.22	5.78
BFD41	0.90	0.57	16.00	6.41	3.28
BFD13	0.90	0.28	10.00	7.98	1.98
BFD7	0.77	0.60	10.00	7.98	3.68
BFD4	0.90	0.44	10.00	7.98	3.15
BFD14	0.90	0.18	10.00	7.98	1.29
BFD27	0.58	0.16	10.00	7.98	0.74
BFD29	0.80	0.61	10.00	7.98	3.85
BFD26	0.90	0.18	10.00	7.98	1.27
BFD30	0.72	0.97	10.00	7.98	5.58
BFD10	0.90	0.14	10.00	7.98	0.97
BFD3	0.90	0.24	10.00	7.98	1.69
BFD15	0.90	0.18	10.00	7.98	1.30
BFD33	0.55	7.11	22.00	5.41	21.25

RUNOFF COMPUTATIONS, CSJ: 0014-16-255

DRAINAGE ID	COMPOSITE C. VALUE	DRAINAGE AREA (ACRES)	TIME CONC (MIN)	INTENSITY (IN/HR)	Q (CFS)
BFD5	0.90	0.10	10.00	7.98	0.69
BFD16	0.90	0.23	10.00	7.98	1.65
BFD15A	0.90	0.37	10.00	7.98	2.67
BFD31	0.90	0.26	10.00	7.98	1.89
BFD8	0.90	0.15	10.00	7.98	1.11
BFD28	0.90	0.28	10.00	7.98	2.00
BFD44	0.55	7.10	16.00	6.41	25.18
BFD1	0.95	0.41	10.00	7.98	3.07
BFD18A	0.90	0.38	10.00	7.98	2.71
BFD49X	0.95	0.41	10.00	7.98	3.12
BFD18	0.90	0.28	10.00	7.98	2.01
BFD17	0.90	0.28	10.00	7.98	1.98
BFD48	0.95	0.29	10.00	7.98	2.19
BFD19	0.90	0.28	10.00	7.98	2.03
BFD57X	0.90	0.55	10.00	7.98	3.96
BFD55X	0.95	0.41	10.00	7.98	3.11
BFD47	0.90	0.18	10.00	7.98	1.32
BFD20	0.90	0.28	10.00	7.98	1.98
BFD56	0.95	0.30	10.00	7.98	2.28
BFD60	0.51	4.00	10.00	7.98	16.31
BFD21	0.90	0.20	10.00	7.98	1.46
BFD20A	0.90	0.22	10.00	7.98	1.57
BFD61	0.54	2.39	10.00	7.98	10.39
BFD22A	0.90	0.21	10.00	7.98	1.49
BFD22	0.90	0.18	10.00	7.98	1.27
BFD23	0.90	0.28	10.00	7.98	1.98
BFD24	0.90	0.28	10.00	7.98	2.00
BFD25	0.90	0.24	10.00	7.98	1.69
BFD24A	0.90	0.21	10.00	7.98	1.49
BFF1	0.76	0.61	10.00	7.98	3.67
BFE3X	0.61	1.45	10.00	7.98	7.07
BFE4X	0.69	3.74	16.00	6.41	16.58
BFE5X	0.90	0.69	10.00	7.98	4.97
BFE11X	0.62	0.96	12.00	7.37	4.38
BFE6X	0.88	0.23	10.00	7.98	1.64
BFE14X	0.67	3.16	12.00	7.37	15.55
BFE10	0.73	0.45	10.00	7.98	2.61
BFE15X	0.74	6.60	25.00	5.03	24.73
BFE20X	0.81	0.79	10.00	7.98	5.12
BFE9	0.65	0.12	10.00	7.98	0.61
BFE16X	0.76	2.20	15.00	6.62	11.10
BFE17X	0.90	0.60	10.00	7.98	4.27
BFE18X	0.86	1.14	10.00	7.98	7.86
01A1	0.90	0.87	10.00	7.98	6.28
01C2	0.90	1.91	10.00	7.98	13.74
01C1	0.90	0.27	10.00	7.98	1.96
01D4	0.55	5.83	10.00	7.98	25.42
01D5	0.72	34.61	37.00	3.96	98.80
01D6	0.90	1.60	10.00	7.98	11.49
01D1	0.69	5.20	10.00	7.98	28.74
01J7	0.59	0.59	10.00	7.98	2.77
01J6	0.64	1.54	10.00	7.98	7.86
01J5	0.69	1.28	10.00	7.98	7.02
01J4	0.67	2.65	10.00	7.98	14.25
01J3	0.90	1.04	10.00	7.98	7.46
01J2	0.85	0.25	10.00	7.98	1.66
01J1	0.67	5.05	10.00	7.98	27.04
02B10	0.90	0.31	10.00	7.98	2.22
02B9	0.90	0.55	10.00	7.98	3.92
02B8	0.90	0.20	10.00	7.98	1.44
02B11	0.90	0.74	10.00	7.98	5.34
02B7	0.90	0.10	10.00	7.98	0.71
02B6	0.90	0.05	10.00	7.98	0.38
02B5	0.90	0.05	10.00	7.98	0.39
02B4	0.90	0.06	10.00	7.98	0.40
02B3	0.90	0.06	10.00	7.98	0.40
02B2	0.90	0.06	10.00	7.98	0.40
02B1	0.90	0.06	10.00	7.98	0.40
02C5	0.90	0.34	10.00	7.98	2.45
02C4	0.90	0.27	10.00	7.98	1.93
02C3	0.89	0.31	10.00	7.98	2.20
02C1	0.88	0.41	10.00	7.98	2.86
02C2	0.72	1.11	10.00	7.98	6.37
02C7	0.90	0.51	10.00	7.98	3.67
01E1	0.59	1.29	10.00	7.98	6.07

NOTE:

1. ALL ON-GRADE INLETS WERE DESIGNED USING A 10 YEAR RETURN INTERVAL.
2. ALL SAG INLETS WERE DESIGNED USING A 50 YEAR RETURN INTERVAL.
3. THE TIME OF CONCENTRATION IS 10.00 MIN U.N.O.
4. FOR TIME OF CONCENTRATION = 10 MIN:
   10 YEAR INTENSITY = 7.98 IN/HR
   50 YEAR INTENSITY = 10.53 IN/HR

STATE OF TEXAS
B. VANDERWALT
81580
LICENSED
PROFESSIONAL ENGINEER

B. Vanderwalt P.E.
7/11/2012

I. S. ENGINEERS, LLC
TBPE REG. # F-11657

Texas Department of Transportation
© 2012

IH 35W FROM NORTH TARRANT PKWY TO IH 820

DRAINAGE COMPUTATIONS
RUNOFF COMPUTATIONS

SHEET 1 OF 19

DESIGN	FED.RD. DIV.NO.	FEDERAL AID PROJECT NO.		HIGHWAY NO.
BV	6	(SEE TITLE SHEET)		IH 35W
GRAPHICS	STATE	DISTRICT	COUNTY	SHEET NO.
ZS	TEXAS	FTW	TARRANT	1186
CHECK	CONTROL	SECTION	JOB	
SY / MNM	0014	16	255, ETC.	

FILENAME: S3BDRCOMP01.dgn
DRAWING DATE: 7/11/2012

RUNOFF COMPUTATIONS, CSJ: 0014-16-255

DRAINAGE ID	COMPOSITE C. VALUE	DRAINAGE AREA (ACRES)	TIME CONC (MIN)	INTENSITY (IN/HR)	Q (CFS)
02D7	0.90	0.44	10.00	7.98	3.19
02D6	0.90	0.45	10.00	7.98	3.24
02D5	0.90	0.41	10.00	7.98	2.91
02D4	0.90	0.39	10.00	7.98	2.82
02D3	0.90	0.39	10.00	7.98	2.80
02D2	0.90	0.35	10.00	7.98	2.54
02D1	0.90	0.45	10.00	7.98	3.20
02E5	0.90	1.78	10.00	7.98	12.81
02E4	0.90	0.28	10.00	7.98	2.02
02E3	0.90	0.28	10.00	7.98	2.03
02E2	0.90	0.28	10.00	7.98	2.03
02E1	0.90	0.43	10.00	7.98	3.12
02G24	0.68	5.93	10.00	7.98	32.20
02G6	0.41	2.19	10.00	7.98	7.19
02G23	0.70	0.96	10.00	7.98	5.37
02G5	0.40	2.10	10.00	7.98	6.77
02G22	0.69	2.66	10.00	7.98	14.58
02G4	0.41	2.13	10.00	7.98	6.93
02G3	0.41	2.12	10.00	7.98	6.89
02G2	0.41	1.81	10.00	7.98	5.99
02G1	0.49	2.35	10.00	7.98	9.26
02H7	0.69	0.49	10.00	7.98	2.74
02H6	0.80	0.71	10.00	7.98	4.57
02H5	0.73	0.43	10.00	7.98	2.51
02H13	0.54	1.10	10.00	7.98	4.75
02H14	0.56	0.52	10.00	7.98	2.29
02H4	0.73	0.43	10.00	7.98	2.51
02H12	0.61	0.82	10.00	7.98	4.00
02H3	0.67	1.18	10.00	7.98	6.34
02H11	0.68	1.03	10.00	7.98	5.61
02H2	0.62	0.72	10.00	7.98	3.59
02H10	0.65	1.03	10.00	7.98	5.37
02H1	0.65	1.18	10.00	7.98	6.14
02H9	0.62	0.71	10.00	7.98	3.54
02J1	0.65	0.55	10.00	7.98	2.87
02A13	0.44	2.49	10.00	7.98	8.77
02A12	0.42	3.71	10.00	7.98	12.37
02A11	0.45	3.81	10.00	7.98	13.72
02A10	0.54	2.82	10.00	7.98	12.06
02A2	0.78	3.84	10.00	7.98	23.99
02A7	0.74	2.13	10.00	7.98	12.55
02A18	0.68	1.52	10.00	7.98	8.20
02A22	0.50	1.60	10.00	7.98	6.39
02A6	0.73	0.42	10.00	7.98	2.41
02A9	0.52	2.13	10.00	7.98	8.88
02A17	0.68	2.02	10.00	7.98	10.88
02A5	0.77	0.85	10.00	7.98	5.22
02A20	0.42	1.33	10.00	7.98	4.43
02A4	0.89	0.85	10.00	7.98	6.05
02A28	0.53	3.21	10.00	7.98	13.62
02A16	0.51	1.63	10.00	7.98	6.64
02A25	0.35	2.38	10.00	7.98	6.65
02A15	0.62	1.68	10.00	7.98	8.25
02A37	0.65	9.55	29.81	4.53	28.22
02A19	0.51	1.78	10.00	7.98	7.27
02A26	0.35	0.46	10.00	7.98	1.28
02A38	0.46	0.79	10.00	7.98	2.91
02A39	0.47	0.81	10.00	7.98	2.99
02A30	0.48	0.82	10.00	7.98	3.14
02A36	0.65	7.06	26.14	4.90	22.62
02A35	0.51	0.73	10.00	7.98	2.94
02A34	0.69	0.64	10.00	7.98	3.52
02A33	0.63	8.76	10.00	7.98	44.29
02A32	0.62	1.62	10.00	7.98	8.01
02A31	0.59	2.11	10.00	7.98	9.90
02F7	0.68	0.53	10.00	7.98	2.89
02F6	0.73	0.46	10.00	7.98	2.71
02F5	0.77	0.42	10.00	7.98	2.59
02F4	0.49	0.56	10.00	7.98	2.20
02F3	0.69	0.35	10.00	7.98	1.91
02F2	0.79	0.34	10.00	7.98	2.15
02F1	0.67	0.32	10.00	7.98	1.69
02F10	0.62	2.69	10.00	7.98	13.34
02G33	0.35	0.61	17.00	6.22	1.33
02G12	0.71	1.06	10.00	7.98	5.95
02G32	0.47	1.43	17.00	6.22	4.15
02G11	0.65	4.88	17.00	6.22	19.67
02G28	0.90	0.09	10.00	7.98	0.66
02G17	0.90	0.22	14.50	6.74	1.31
02G31	0.36	0.65	17.00	6.22	1.46
02G10	0.90	0.19	14.50	6.74	1.18
02G27	0.65	2.80	17.00	6.22	11.26

RUNOFF COMPUTATIONS, CSJ: 0014-16-255

DRAINAGE ID	COMPOSITE C. VALUE	DRAINAGE AREA (ACRES)	TIME CONC (MIN)	INTENSITY (IN/HR)	Q (CFS)
02G16	0.90	0.19	14.50	6.74	1.15
02G19	0.65	3.84	14.50	6.74	16.76
02G15	0.90	0.18	18.20	6.00	0.98
02G30	0.65	3.66	17.00	6.22	14.71
02G18	0.65	3.72	14.50	6.74	16.20
02G26	0.90	0.18	18.20	6.00	0.96
02G9	0.90	0.18	14.50	6.74	1.09
02G14	0.64	3.37	18.20	6.00	13.05
02G25	0.65	3.73	14.50	6.74	16.24
02G7	0.42	1.60	10.00	7.98	5.33
02G8	0.64	2.80	10.00	7.98	14.36
02G13	0.66	1.11	10.00	7.98	5.86
02G29	0.68	0.95	10.00	7.98	5.15
E4	0.90	0.14	10.00	7.98	1.04
E3	0.90	0.06	10.00	7.98	0.42
C1	0.90	0.40	10.00	7.98	2.86
E1	0.90	0.04	10.00	7.98	0.30
E2	0.90	0.07	10.00	7.98	0.50
02M3	0.44	4.37	10.00	7.98	15.38

NOTE:

1. ALL ON-GRADE INLETS WERE DESIGNED USING A 10 YEAR RETURN INTERVAL.
2. ALL SAG INLETS WERE DESIGNED USING A 50 YEAR RETURN INTERVAL.
3. THE TIME OF CONCENTRATION IS 10.00 MIN U.N.O.
4. FOR TIME OF CONCENTRATION = 10 MIN:
   10 YEAR INTENSITY = 7.98 IN/HR
   50 YEAR INTENSITY = 10.53 IN/HR

STATE OF TEXAS
SHAFEE YUSUF
94963
LICENSED
PROFESSIONAL ENGINEER

7/11/12

I. S. ENGINEERS, LLC
TBPE REG. # F-11657

Texas Department of Transportation
© 2012

IH 35W FROM NORTH TARRANT PKWY TO IH 820

RUNOFF COMPUTATIONS

SHEET 2 OF 19

DESIGN	FED.RD. DIV.NO.	FEDERAL AID PROJECT NO.		HIGHWAY NO.
BV	6	(SEE TITLE SHEET)		IH 35W
GRAPHICS ZS	STATE	DISTRICT	COUNTY	SHEET NO.
CHECK SY	TEXAS	FTW	TARRANT	1187
CHECK MNM	CONTROL 0014	SECTION 16	JOB 255, ETC.	

DRAWING DATE: 7/11/2012 FILENAME: S3BDRCOMP02.dgn

RUNOFF COMPUTATIONS, CSJ: 0014-16-255

DRAINAGE ID	COMPOSITE C VALUE	DRAINAGE AREA (ACRES)	TIME CONC (MIN)	INTENSITY (IN/HR)	Q (CFS)
FCB1	0.82	0.33	10.00	10.53	2.82
FCB2	0.82	0.19	10.00	10.53	1.65
FCB3	0.83	0.10	10.00	10.53	0.90
FCB4	0.85	0.46	10.00	10.53	4.17
FCB5	0.90	1.21	10.00	10.53	11.49
FCB6	0.83	0.41	10.00	10.53	3.53
BFG1	0.88	0.08	10.00	7.98	0.58
BFG2	0.88	0.04	10.00	10.53	0.32
BFG3	0.85	0.03	10.00	7.98	0.19
BFG4	0.88	0.13	10.00	7.98	0.92
BFG5	0.89	0.19	10.00	7.98	1.34
BFH1	0.89	0.28	10.00	7.98	1.97
BFH2	0.89	0.19	10.00	7.98	1.32
BFI1	0.89	0.27	10.00	7.98	1.92
BFI2	0.89	0.19	10.00	7.98	1.36
BFJ1	0.89	0.24	10.00	7.98	1.73
BFJ2	0.89	0.23	10.00	7.98	1.67
BFJ3	0.90	0.28	10.00	7.98	1.98
03A1	0.86	0.54	10.00	10.53	4.83
03A2	0.74	0.31	10.00	10.53	2.45
03A3	0.82	0.21	10.00	10.53	1.83
03A4	0.90	0.09	10.00	10.53	0.83
03A5	0.88	0.16	10.00	10.53	1.48
03A6	0.87	0.46	10.00	10.53	4.18
03A7	0.72	0.68	10.00	10.53	5.21
03A8	0.78	0.33	10.00	10.53	2.74
03A9	0.76	0.55	10.00	10.53	4.41
03B1	0.90	0.52	10.00	7.98	3.72
03B2	0.89	0.23	10.00	7.98	1.61
03B3	0.89	0.24	10.00	7.98	1.74
03B4	0.89	0.25	10.00	7.98	1.74
03B5	0.89	0.26	10.00	7.98	1.87
03C1	0.90	0.28	10.00	7.98	2.02
03C2	0.90	0.38	10.00	7.98	2.72
03D1	0.90	0.30	10.00	7.98	2.17
03D2	0.90	0.32	10.00	7.98	2.29
03E1	0.89	0.34	10.00	7.98	2.42
03E2	0.89	0.35	10.00	7.98	2.48
03E3	0.89	0.44	10.00	7.98	3.12
03E4	0.35	0.68	10.00	10.53	2.50
03F1	0.88	0.51	10.00	10.53	4.76
03F2	0.78	0.25	10.00	10.53	2.08
03F3	0.65	0.71	10.00	10.53	4.84
03F4	0.75	0.21	10.00	10.53	1.68
03F5	0.79	0.36	10.00	10.53	3.00
03F6	0.50	2.07	15.00	8.74	9.05
03F7	0.86	0.45	10.00	10.53	4.09
03F8	0.65	2.30	10.00	10.53	15.73
03F9	0.81	0.21	10.00	10.53	1.80
03F10	0.79	0.15	10.00	10.53	1.25
03F11	0.69	0.61	10.00	10.53	4.49
03F12	0.65	1.66	15.00	8.74	9.51
03F13	0.69	0.26	15.00	8.74	1.54
03G1	0.74	0.41	10.00	10.53	3.18
03G2	0.72	0.53	10.00	10.53	4.02
03G3	0.80	0.23	10.00	10.53	1.98
03G4	0.87	0.59	10.00	10.53	5.39
03G6	0.81	1.34	10.00	10.53	11.43
03G7	0.84	0.09	10.00	10.53	0.79
03G8	0.81	2.91	10.00	10.53	24.90
03G9	0.87	1.08	10.00	10.53	9.85
03H1	0.35	0.23	10.00	10.53	0.86
03H2	0.89	0.29	10.00	7.98	2.04
03H3	0.89	0.28	10.00	7.98	2.00
03H4	0.80	0.63	10.00	7.98	4.04
03H5	0.78	0.61	10.00	7.98	3.81
03H6	0.75	0.62	10.00	7.98	3.69
03H7	0.90	0.37	10.00	7.98	2.63

RUNOFF COMPUTATIONS, CSJ: 0014-16-255

DRAINAGE ID	COMPOSITE C VALUE	DRAINAGE AREA (ACRES)	TIME CONC (MIN)	INTENSITY (IN/HR)	Q (CFS)
03I1	0.90	0.56	10.00	7.98	4.01
03I2	0.90	0.58	10.00	7.98	4.15
03I3	0.90	0.18	10.00	10.53	1.69
03I4	0.90	0.50	10.00	7.98	3.57
03I5	0.90	0.60	10.00	7.98	4.31
03J1	0.90	0.48	10.00	7.98	3.42
03J2	0.90	0.36	10.00	7.98	2.57
03J3	0.90	0.14	10.00	10.53	1.34
03J4	0.90	0.42	10.00	7.98	2.99
03J5	0.90	0.40	10.00	7.98	2.91
03J6	0.90	0.40	10.00	7.98	2.89
03K1	0.90	0.38	10.00	7.98	2.73
03K2	0.74	0.42	10.00	7.98	2.47
03K3	0.87	0.62	10.00	7.98	4.33
03K4	0.90	0.49	10.00	7.98	3.50
03K5	0.90	0.40	10.00	7.98	2.84
03L1	0.65	2.64	15.00	8.74	15.05
03L2	0.67	0.65	10.00	10.53	4.61
03L3	0.68	1.56	10.00	10.53	11.11
03L4	0.42	0.15	10.00	10.53	0.69
03L5	0.65	0.98	10.00	10.53	6.72
03L6	0.65	0.82	10.00	10.53	5.59
03L7	0.64	4.22	10.00	10.53	28.20
03L8	0.67	2.88	10.00	10.53	20.35
04A1	0.79	0.52	10.00	10.53	4.38
04A2	0.80	1.32	10.00	10.53	11.08
04A3	0.85	0.43	10.00	10.53	3.81
04A4	0.80	0.68	10.00	10.53	5.69
04A5	0.83	0.64	10.00	10.53	5.58
04A6	0.80	1.10	10.00	10.53	9.29
04A7	0.81	0.87	10.00	10.53	7.38
04A8	0.81	0.96	10.00	10.53	8.25
04A9	0.81	0.43	10.00	10.53	3.69
04A10	0.81	1.21	10.00	10.53	10.35
04A11	0.77	0.33	10.00	10.53	2.64
04A12	0.76	0.91	10.00	10.53	7.28
04A13	0.75	0.97	10.00	10.53	7.67
04B1	0.90	0.28	10.00	7.98	1.99
04B2	0.89	0.14	10.00	10.53	1.27
04B3	0.80	0.14	10.00	7.98	0.92
04C1	0.90	0.48	10.00	7.98	3.44
04D1	0.90	0.40	10.00	7.98	2.87
04H1	0.90	0.29	10.00	7.98	2.05
04H2	0.90	0.28	10.00	7.98	2.00
04H3	0.90	0.29	10.00	7.98	2.11
04H4	0.74	0.26	10.00	10.53	2.02
04H5	0.87	0.75	10.00	7.98	5.16
04H6	0.36	0.10	10.00	7.98	0.28
04H7	0.76	0.33	10.00	7.98	2.00
04H8	0.76	0.33	10.00	10.53	2.67
04H9	0.71	0.58	10.00	7.98	3.32
04H10	0.70	0.90	10.00	7.98	5.02
04H11	0.72	0.83	10.00	7.98	4.76
04H12	0.75	0.79	10.00	7.98	4.71
04H13	0.82	0.69	10.00	7.98	4.49
04H14	0.86	0.97	10.00	7.98	6.64
04H15	0.78	0.16	10.00	7.98	0.98
04I1	0.90	0.48	10.00	7.98	3.43
04I2	0.90	0.47	10.00	7.98	3.36
04I3	0.90	0.48	10.00	7.98	3.44
04I4	0.90	0.48	10.00	7.98	3.42
04I5	0.90	0.47	10.00	7.98	3.38
04I6	0.90	0.49	10.00	7.98	3.49
04I7	0.90	0.47	10.00	7.98	3.41
04I8	0.90	0.49	10.00	7.98	3.49
04I9	0.90	0.47	10.00	7.98	3.34

RUNOFF COMPUTATIONS, CSJ: 0014-16-255

DRAINAGE ID	COMPOSITE C VALUE	DRAINAGE AREA (ACRES)	TIME CONC (MIN)	INTENSITY (IN/HR)	Q (CFS)
04J1	0.90	0.41	10.00	7.98	2.91
04J2	0.90	0.40	10.00	7.98	2.91
04J3	0.90	0.40	10.00	7.98	2.90
04J4	0.90	0.40	10.00	7.98	2.90
04J5	0.90	0.41	10.00	7.98	2.92
04J6	0.90	0.41	10.00	7.98	2.93
04J7	0.90	0.41	10.00	7.98	2.91
04J8	0.90	0.68	10.00	7.98	4.88

NOTES:

1. ALL ON-GRADE INLETS WERE DESIGNED USING A 10 YEAR RETURN INTERVAL.
2. ALL SAG INLETS WERE DESIGNED USING A 50 YEAR RETURN INTERVAL.
3. THE TIME OF CONCENTRATION IS 10.00 MIN U.N.O.
4. FOR TIME OF CONCENTRATION = 10 MIN:
   10 YEAR INTENSITY = 7.98 IN/HR
   50 YEAR INTENSITY = 10.53 IN/HR

STATE OF TEXAS
THOMAS E. T. COCHILL
87665
LICENSED
PROFESSIONAL ENGINEER

Thomas E. T. Cochill
7/6/12

CP&Y, INC.
TBPE REGISTRATION NO. F-1741

Texas Department of Transportation
© 2012

IH 35W FROM NORTH TARRANT PKWY TO IH 820

DRAINAGE COMPUTATIONS
RUNOFF COMPUTATIONS

SHEET 3 OF 19

DESIGN	FED. RD. DIV. NO.	FEDERAL AID PROJECT NO.		HIGHWAY NO.
CPY	6	(SEE TITLE SHEET)		IH 35W
GRAPHICS CPY	STATE	DISTRICT	COUNTY	SHEET NO.
CHECK CPY	TEXAS	FTW	TARRANT	1188
CHECK	CONTROL	SECTION	JOB	
CPY	0014	16	255, ETC.	

DRAWING DATE: 7/13/2012 FILENAME: S3BDCOMP01.dgn

ON-GRADE INLETS, CSJ: 0014-16-255

INLET ID	BASELINE	STATION	TYPE	Q (CFS)	PONDED WIDTH (FT)	ALLOWED PONDING (FT)	CROSS SLOPE (%)	INLET LENGTH (FT)	LENGTH REQ'D (FT)	CURB DEPRESSION (FT)	GRATE DIM (FT)	Q BYPASS (CFS)
SYSTEM BFA												
BFA34	SBFRI	3127+10.73	Curb	1.25	7.36	14.00	2.00	10.00	7.73	0.33	n/a	0.00
BFA2X	SBFRI	119+02.00	Curb	2.01	6.90	14.00	2.00	10.00	13.52	0.33	n/a	0.18
BFA1X	SBFRI	117+48.42	Curb	5.48	10.35	14.00	2.00	15.00	23.31	0.33	n/a	0.86
BFA18	BB-MLS	23+20.00	Grate	0.33	4.10	10.00	2.00	n/a	n/a	n/a	2' X 2'	0.05
BFA19	BB-MLS	22+55.22	Grate	0.43	4.51	10.00	2.00	n/a	n/a	n/a	2' X 2'	0.08
BFA31X	SBFRI	109+18.07	Curb	6.88	15.66	16.00	2.00	10.00	17.98	0.33	n/a	1.59
BFA29X	SBFRI	104+74.94	Curb	1.56	8.05	16.00	2.00	10.00	8.70	0.33	n/a	0.00
BFA37X	BB	23+15.23	Curb	2.20	8.72	11.00	2.00	10.00	11.26	0.33	n/a	0.04
BFA36	BBNS	17+22.00	Curb	1.65	8.03	11.00	2.00	10.00	9.23	0.33	n/a	0.00
BFA38X	BB	23+15.72	Curb	2.13	8.84	11.00	2.00	10.00	10.70	0.33	n/a	0.02
BFA41	SBFRI	89+74.00	Curb	5.76	13.94	20.00	2.00	15.00	17.22	0.33	n/a	0.14
BFA39	BBSN	17+20.00	Curb	1.65	7.99	11.00	2.00	10.00	9.30	0.33	n/a	0.00
BFA43	SBFRI	87+13.00	Curb	3.83	11.10	14.00	2.00	10.00	14.91	0.33	n/a	0.52
SYSTEM BFC												
BFC4	BB-35S	23+80.50	Grate	1.79	7.12	8.00	2.42	n/a	n/a	n/a	3' X 3.33'	0.30
BFC8	BB-35S	21+60.00	Grate	1.31	6.79	8.00	2.00	n/a	n/a	n/a	2' X 2'	0.47
BFC10A	BB-35S	19+31.32	Grate	1.55	7.36	8.00	2.00	n/a	n/a	n/a	3' X 3.33'	0.29
BFC5	35W ML	1531+50.00	Grate	1.40	6.76	10.00	2.50	n/a	n/a	n/a	3' X 3.33'	0.19
BFC9	BB-MLS	38+20.00	Grate	0.89	6.22	10.00	2.00	n/a	n/a	n/a	3' X 3.33'	0.10
BFC3	35W ML	1532+50.00	Grate	1.81	7.01	10.00	2.50	n/a	n/a	n/a	3' X 3.33'	0.29
BFC1	35W ML	1533+50.00	Grate	2.64	9.14	10.00	2.00	n/a	n/a	n/a	3' X 3.33'	0.72
BFC13	35W ML	1527+60.00	Grate	2.67	10.04	22.00	2.50	n/a	n/a	n/a	3' X 3.33'	1.22
BFC12	BB-MLS	37+00.00	Grate	0.70	5.09	10.00	2.00	n/a	n/a	n/a	2' X 2'	0.17
BFC14	BB-MLS	35+40.00	Grate	1.61	6.38	10.00	2.00	n/a	n/a	n/a	2' X 2'	0.43
BFC19A	35W ML	1523+50.00	Grate	2.44	8.85	22.00	2.50	n/a	n/a	n/a	2' X 2'	1.06
BFC20	35W ML	1521+00.00	Grate	2.01	8.22	22.00	2.50	n/a	n/a	n/a	2' X 2'	0.81
BFC21	35W ML	1518+00.00	Grate	1.70	7.73	22.00	2.50	n/a	n/a	n/a	2' X 2'	0.65
BFC22	35W ML	1515+50.00	Grate	6.01	12.39	22.00	2.50	n/a	n/a	n/a	2' X 2'	3.40
BFC23	35W ML	1512+50.00	Grate	3.66	10.29	22.00	2.50	n/a	n/a	n/a	2' X 2'	3.39
BFC24	35W ML	1509+50.00	Grate	3.49	10.11	22.00	2.50	n/a	n/a	n/a	2' X 2'	1.71
BFC24A	35W ML	1506+50.00	Grate	3.15	9.73	22.00	2.50	n/a	n/a	n/a	2' X 2'	1.49
BFC25A	35W ML	1504+00.00	Grate	3.03	9.59	22.00	2.50	n/a	n/a	n/a	2' X 2'	1.42
BFC26	35W ML	1501+00.00	Grate	2.08	7.59	22.00	2.50	n/a	n/a	n/a	2' X 2'	0.82
BFC27	35W ML	1498+00.00	Grate	0.96	5.55	22.00	2.50	n/a	n/a	n/a	2' X 2'	0.25
BFC28	35W ML	1495+00.00	Grate	3.14	8.66	22.00	2.50	n/a	n/a	n/a	2' X 2'	1.43
BFC29	35W ML	1492+00.00	Grate	2.69	8.17	22.00	2.50	n/a	n/a	n/a	2' X 2'	1.16
BFC30	35W ML	1489+00.00	Grate	1.96	7.64	22.00	2.50	n/a	n/a	n/a	2' X 2'	0.77
SYSTEM BFD												
BFD35	35NGP	1532+06.55	Grate	2.10	7.32	11.00	2.50	n/a	n/a	n/a	2' X 2'	0.81
BFD6	35N-BB	27+13.56	Grate	0.52	5.04	10.00	2.00	n/a	n/a	n/a	2' X 2'	0.12
BFD36	35NGP	1530+06.00	Grate	3.10	9.73	11.00	2.50	n/a	n/a	n/a	2' X 2'	1.46
BFD13	35ML	1527+00.00	Grate	3.09	9.82	22.00	2.50	n/a	n/a	n/a	2' X 2'	1.46
BFD14	35ML	1524+00.00	Grate	2.53	8.96	22.00	2.50	n/a	n/a	n/a	2' X 2'	1.12
BFD27	35N-BB	15+12.58	Grate	0.74	1.22	11.00	25.00	n/a	n/a	n/a	2' X 2'	0.00
BFD26	35ML	1522+00.00	Grate	2.74	9.23	22.00	2.50	n/a	n/a	n/a	2' X 2'	1.24
BFD10	MLN-BB	35+92.60	Grate	0.97	5.66	10.00	2.00	n/a	n/a	n/a	2' X 2'	0.28
BFD3	35ML	1531+50.00	Grate	1.69	7.26	22.00	2.50	n/a	n/a	n/a	2' X 2'	0.62
BFD15	35ML	1520+00.00	Grate	3.11	9.68	22.00	2.50	n/a	n/a	n/a	2' X 2'	1.47
BFD5	MLN-BB	37+42.50	Grate	0.96	6.45	10.00	2.00	n/a	n/a	n/a	2' X 2'	0.31
BFD16	35ML	1518+00.00	Grate	3.64	10.27	22.00	2.50	n/a	n/a	n/a	2' X 2'	1.80
BFD28	35ML	1515+50.00	Grate	3.93	10.57	22.00	2.50	n/a	n/a	n/a	2' X 2'	1.99
BFD1	MLN-BB	39+73.00	Grate	3.07	9.53	10.00	2.50	n/a	n/a	n/a	3' X 3.33'	0.78
BFD49X	BB	17+24.53	Curb	3.12	9.44	16.00	2.00	10.00	14.62	0.33	n/a	0.39
BFD18	35ML	1509+50.00	Grate	3.71	10.34	22.00	2.50	n/a	n/a	n/a	2' X 2'	1.85
BFD17	35ML	1512+50.00	Grate	3.83	10.47	22.00	2.50	n/a	n/a	n/a	2' X 2'	1.93
BFD48	BBNS	11+33.22	Curb	2.19	8.37	16.00	2.00	10.00	11.75	0.33	n/a	0.07
BFD19	35ML	1506+50.00	Grate	3.48	10.10	22.00	2.50	n/a	n/a	n/a	2' X 2'	1.70
BFD57X	NBFRI	1496+81.80	Curb	4.04	13.86	16.00	2.00	10.00	12.09	0.33	n/a	0.17
BFD55X	BB	17+22.98	Curb	3.11	9.43	16.00	2.00	10.00	14.58	0.33	n/a	0.39
BFD20	35ML	1503+50.00	Grate	3.09	9.47	22.00	2.50	n/a	n/a	n/a	2' X 2'	1.45
BFD56	BBSN	11+44.00	Curb	2.28	8.57	16.00	2.00	10.00	11.90	0.33	n/a	0.08
BFD21	35ML	1500+50.00	Grate	2.60	8.15	22.00	2.50	n/a	n/a	n/a	2' X 2'	1.11
BFD22	35ML	1497+50.00	Grate	2.67	8.14	22.00	2.50	n/a	n/a	n/a	2' X 2'	1.14
BFD23	35ML	1494+50.00	Grate	3.11	8.62	22.00	2.50	n/a	n/a	n/a	2' X 2'	1.40
BFD24	35ML	1491+50.00	Grate	2.63	8.10	22.00	2.50	n/a	n/a	n/a	2' X 2'	1.12
BFD25	35ML	1488+50.00	Grate	1.69	7.46	22.00	2.50	n/a	n/a	n/a	2' X 2'	0.63
SYSTEM BFF												
BFF1	NBFRI	1533+99.89	Curb	3.67	10.87	16.50	2.00	15.00	14.62	0.33	n/a	0.00
SYSTEM BFE												
BFE5X	NBFRI	1527+50.94	Curb	4.97	14.36	14.00 *	2.00	15.00	14.29	0.33	n/a	0.00
BFE9	35N-BB	23+54.96	Grate	0.61	5.59	11.00	2.00	n/a	n/a	n/a	2' X 2'	0.16

* EXISTING INLET TO REMAIN

ON-GRADE INLETS, CSJ: 0014-16-255

INLET ID	BASELINE	STATION	TYPE	Q (CFS)	PONDED WIDTH (FT)	ALLOWED PONDING (FT)	CROSS SLOPE (%)	INLET LENGTH (FT)	LENGTH REQ'D (FT)	CURB DEPRESSION (FT)	GRATE DIM (FT)	Q BYPASS (CFS)
02B10	35W ML	1461+80.00	Grate	2.22	9.77	10.00	2.50	n/a	n/a	n/a	3' X 3.33'	0.45
02B8	DC 287E-MLS	66+00.00	Grate	1.44	7.09	10.00	2.38	n/a	n/a	n/a	2' X 2'	0.51
02B7	DC 287E-MLS	63+30.00	Grate	0.71	4.80	5.30	2.00	n/a	n/a	n/a	2' X 2'	0.15
02B6	DC 287E-MLS	62+30.00	Grate	0.38	3.80	4.60	2.00	n/a	n/a	n/a	2' X 2'	0.05
02B5	DC 287E-MLS	61+80.00	Grate	0.39	3.83	4.30	2.00	n/a	n/a	n/a	2' X 2'	0.05
02B4	DC 287E-MLS	61+30.00	Grate	0.45	4.02	4.00	2.00	n/a	n/a	n/a	2' X 2'	0.06
02B3	DC 287E-MLS	60+80.00	Grate	0.40	3.84	4.00	2.00	n/a	n/a	n/a	2' X 2'	0.05
02B2	DC 287E-MLS	60+30.00	Grate	0.45	4.03	4.00	2.00	n/a	n/a	n/a	2' X 2'	0.07
02B1	DC 287E-MLS	59+80.00	Grate	0.41	3.89	4.00	2.00	n/a	n/a	n/a	2' X 2'	0.05

STATE OF TEXAS
B. VANDERWALT
81580
LICENSED
PROFESSIONAL ENGINEER

Brandwalt P.E.
7/11/2012

I. S. ENGINEERS, LLC
TBPE REG. # F-11657

Texas Department of Transportation
© 2012

IH 35W FROM NORTH TARRANT PKWY TO IH 820

DRAINAGE COMPUTATIONS
ON-GRADE INLET COMPUTATIONS

SHEET 4 OF 19

DESIGN	FED.RD. DIV.NO.	FEDERAL AID PROJECT NO.		HIGHWAY NO.
BV	6	(SEE TITLE SHEET)		IH 35W
GRAPHICS	STATE	DISTRICT	COUNTY	SHEET NO.
ZS	TEXAS	FTW	TARRANT	1189
CHECK	CONTROL	SECTION	JOB	
SY	0014	16	255, ETC.	
CHECK				
MNM				

FILENAME: S3BDRCOMP03.dgn
DRAWING DATE: 7/11/2012

ON-GRADE INLETS, CSJ: 0014-16-255

INLET ID	BASELINE	STATION	TYPE	Q (CFS)	PONDED WIDTH (FT)	ALLOWED PONDING (FT)	CROSS SLOPE (%)	INLET LENGTH (FT)	LENGTH REQ'D (FT)	CURB DEPRESSION (FT)	GRATE DIM (FT)	Q BYPASS (CFS)
SYSTEM 02C												
02C5	35W ML	1463+50.00	Grate	2.45	9.20	10.00	2.50	n/a	n/a	n/a	3' X 3.33'	0.54
02C4	35W ML	1462+10.00	Grate	2.47	9.69	10.00	2.50	n/a	n/a	n/a	3' X 3.33'	0.54
02C1	DC MLN-287W	68+00.00	Grate	2.86	9.21	10.00	2.38	n/a	n/a	n/a	3' X 3.33'	0.72
SYSTEM 02D												
02D6	35W ML	1466+00.00	Grate	3.24	2.41	22.00	25.00	n/a	n/a	n/a	5' X 3'	0
02D5	35W ML	1469+00.00	Grate	2.91	2.29	22.00	25.00	n/a	n/a	n/a	5' X 3'	0
02D4	35W ML	1472+00.00	Grate	2.82	2.26	22.00	25.00	n/a	n/a	n/a	5' X 3'	0
02D3	35W ML	1475+00.00	Grate	2.80	2.25	22.00	25.00	n/a	n/a	n/a	5' X 3'	0
02D2	35W ML	1478+00.00	Grate	3.37	2.33	22.00	25.00	n/a	n/a	n/a	5' X 3'	0
02D1	35W ML	1481+00.00	Grate	3.20	10.17	22.00	2.50	n/a	n/a	n/a	3' X 3.33'	0.83
SYSTEM 02E												
02E4	35W ML	1472+00.00	Grate	2.65	9.48	22.00	2.50	n/a	n/a	n/a	3' X 3.33'	0.61
02E3	35W ML	1475+00.00	Grate	2.71	9.55	22.00	2.50	n/a	n/a	n/a	3' X 3.33'	0.63
02E2	35W ML	1478+00.00	Grate	2.82	9.70	22.00	2.50	n/a	n/a	n/a	3' X 3.33'	0.68
02E1	35W ML	1481+00.00	Grate	3.12	10.07	22.00	2.50	n/a	n/a	n/a	3' X 3.33'	0.80
SYSTEM 02G1												
02G6	SBFRI	71+00.00	Curb	8.69	15.92	16.00	2.00	15.00	22.35	0.33	n/a	1.17
02G5	SBFRI	72+50.00	Curb	8.40	14.40	16.00	2.00	15.00	24.35	0.33	n/a	1.50
02G4	SBFRI	74+00.00	Curb	8.48	14.19	16.00	2.00	15.00	25.02	0.33	n/a	1.63
02G3	SBFRI	75+50.00	Curb	8.30	14.08	16.00	2.00	15.00	24.72	0.33	n/a	1.55
02G2	SBFRI	77+00.00	Curb	8.02	13.90	16.00	2.00	15.00	24.24	0.33	n/a	1.41
02G1	SBFRI	78+50.00	Curb	9.26	14.67	16.00	2.00	15.00	26.32	0.33	n/a	2.03
SYSTEM 02H												
02H5	NBFRI	1475+25.00	Curb	3.81	11.11	16.00	2.00	10.00	14.81	0.33	n/a	0.50
02H4	NBFRI	1478+20.00	Curb	5.47	12.71	16.00	2.00	10.00	18.24	0.33	n/a	1.31
02H3	NBFRI	1481+20.00	Curb	8.23	14.81	16.00	2.00	10.00	23.06	0.33	n/a	2.96
02H2	NBFRI	1484+20.00	Curb	5.84	11.71	16.00	2.00	10.00	21.47	0.33	n/a	1.89
02H1	NBFRI	1487+20.00	Curb	6.14	11.38	16.00	2.00	10.00	23.39	0.33	n/a	2.25
SYSTEM 02F												
02F7	SBFRI	52+75.00	Curb	3.75	12.68	16.00	2.00	10.00	12.44	0.33	n/a	0.20
02F6	SBFRI	49+25.00	Curb	2.77	11.32	16.00	2.00	5.00	10.44	0.33	n/a	0.86
02F5	SBFRI	45+75.00	Curb	3.12	11.84	16.00	2.00	10.00	11.20	0.33	n/a	0.06
02F4	SBFRI	42+25.00	Curb	2.20	10.38	16.00	2.00	5.00	9.15	0.33	n/a	0.53
02F3	SBFRI	39+25.00	Curb	2.41	10.75	16.00	2.00	10.00	9.65	0.33	n/a	0
02F2	SBFRI	36+25.00	Curb	2.15	10.29	16.00	2.00	5.00	9.02	0.33	n/a	0.50
02F1	SBFRI	33+25.00	Curb	1.69	9.40	16.00	2.00	10.00	7.85	0.33	n/a	0
SYSTEM 02G2												
02G28	SBFRI	60+00.00	Curb	0.79	7.22	16.00	2.00	5.00	4.94	0.33	n/a	0.00
02G17	SBFRI	62+50.00	Curb	1.55	9.30	16.00	2.00	10.00	7.30	0.33	n/a	0.00
02G10	SBFRI	61+00.00	Curb	1.40	8.94	16.00	2.00	5.00	6.86	0.33	n/a	0.13
02G16	SBFRI	64+00.00	Curb	1.36	8.84	16.00	2.00	10.00	6.75	0.33	n/a	0
02G15	SBFRI	67+00.00	Curb	1.30	8.70	16.00	2.00	10.00	6.58	0.33	n/a	0
02G26	SBFRI	65+50.00	Curb	1.28	8.65	16.00	2.00	10.00	6.52	0.33	n/a	0
02G9	SBFRI	68+50.00	Curb	2.58	11.26	16.00	2.00	10.00	9.80	0.33	n/a	0
02G7	SBFRI	70+00.00	Curb	6.51	15.72	16.00	2.00	10.00	16.90	0.33	n/a	1.30
SYSTEM 02G3												
02G13	SBFRI	55+00.00	Curb	6.06	15.18	16.00	2.00	10.00	16.39	0.33	n/a	1.11
02G29	SBFRI	57+00.00	Curb	6.26	15.36	16.00	2.00	10.00	16.70	0.33	n/a	1.21
BRIDGE SCUPPERS												
E4	MLN-BB	33+40.00	Grate	1.04	3.73	6.00	3.50	n/a	n/a	n/a	1' X 3.33'	0
E3	MLN-BB	31+06.00	Grate	0.42	2.15	6.00	4.90	n/a	n/a	n/a	1' X 3.33'	0
C1	BB-MLS	33+28.00	Grate	2.86	5.69	10.00	3.31	n/a	n/a	n/a	1' X 3.33'	0.46
E1	MLN-BB	28+35.00	Grate	0.30	4.02	6.00	1.92	n/a	n/a	n/a	1' X 3.33'	0
E2	MLN-BB	27+69.00	Grate	0.50	3.28	6.00	4.20	n/a	n/a	n/a	1' X 3.33'	0
DIRECT CONNECTOR 287E-MLS												
02B14	DC 287E-MLS	59+30.00	Grate	0.69	4.29	4.00	2.34	1.00	n/a	n/a	1' X 3.33'	0.01
02B13	DC 287E-MLS	58+72.52	Grate	0.74	3.43	4.00	3.49	1.00	n/a	n/a	1' X 3.33'	0
02B12	DC 287E-MLS	57+72.52	Grate	1.68	3.73	5.86	5.00	1.00	n/a	n/a	1' X 3.33'	0.05

STATE OF TEXAS
SHAFEE YUSUF
94963
LICENSED
PROFESSIONAL ENGINEER
7/11/12

I. S. ENGINEERS, LLC
TBPE REG. # F-11657

Texas Department of Transportation
© 2012

IH 35W FROM NORTH TARRANT PKWY TO IH 820

DRAINAGE COMPUTATIONS

ON-GRADE INLET COMPUTATIONS

SHEET 5 OF 19

DESIGN	FED.RD. DIV.NO.	FEDERAL AID PROJECT NO.		HIGHWAY NO.
BV	6	(SEE TITLE SHEET)		IH 35W
GRAPHICS	STATE	DISTRICT	COUNTY	SHEET NO.
ZS	TEXAS	FTW	TARRANT	1190
CHECK	CONTROL	SECTION	JOB	
SY / MNM	0014	16	255, ETC.	

FILENAME: S3BDRCOMP04.dgn

DRAWING DATE: 7/11/2012

ON-GRADE INLETS CSJ: 0014-16-255

INLET ID	BASELINE	STATION	TYPE	Q (CFS)	PONDED WIDTH (FT)	ALLOWED PONDING (FT)	CROSS SLOPE (%)	INLET LENGTH (FT)	LENGTH REQ'D (FT)	CURB DEPRESSION (FT)	GRATE DIM (FT)	Q BYPASS (CFS)	BYPASS TO INLET
FCB5	FCB	6+22.01	Curb	11.49	19.75	20.00	2.00	20.00	22.90	0.33	n/a	0.28	
FCB6	FCB	6+16.65	Curb	4.94	14.45	20.00	2.00	20.00	14.11	0.33	n/a	0.00	FCB4
BFG1	35NGP	1537+40.54	Grate	0.58	6.74	10.00	2.24	n/a	n/a	n/a	3' X 3.33'	0.04	BFG2
BFG3	35NGP	1537+90.15	Grate	0.33	5.59	10.00	2.33	n/a	n/a	n/a	3' X 3.33'	0.01	BFG2
BFG4	35NGP	1538+31.82	Grate	1.11	7.53	10.00	2.41	n/a	n/a	n/a	3' X 3.33'	0.14	BFG3
BFG5	35NGP	1538+90.29	Grate	1.34	7.86	10.00	2.52	n/a	n/a	n/a	3' X 3.33'	0.18	BFG4
BFH1	35ML	1536+62.36	Grate	2.18	8.51	10.00	2.00	n/a	n/a	n/a	3' X 3.33'	0.53	BFC
BFH2	35ML	1538+57.17	Grate	1.32	7.04	10.00	2.00	n/a	n/a	n/a	3' X 3.33'	0.22	BFH1
BFI1	35ML	1536+40.00	Grate	2.17	8.80	10.00	2.00	n/a	n/a	n/a	3' X 3.33'	0.54	BFC
BFI2	35ML	1538+50.00	Grate	1.36	8.62	10.00	2.00	n/a	n/a	n/a	3' X 3.33'	0.25	BFI1
BFJ1	35SGP	1537+19.61	Grate	2.15	7.61	10.00	2.50	n/a	n/a	n/a	3' X 3.33'	0.41	BFC
BFJ2	35SGP	1538+20.44	Grate	2.14	7.88	10.00	2.50	n/a	n/a	n/a	3' X 3.33'	0.42	BFJ1
BFJ3	35SGP	1539+31.28	Grate	1.98	9.95	10.00	2.00	n/a	n/a	n/a	3' X 3.33'	0.47	BFJ2
03A1	NBFRI	1538+10.00 R 4	Curb	4.83	10.72	16.00	2.00	10.00	19.63	0.33	n/a	1.34	03A2
03A2	NBFRI	1540+00.00 R 4	Curb	3.79	12.79	16.00	2.00	15.00	12.46	0.33	n/a	0.00	
03A6	NBFRI	1543+05.00 R 4	Curb	4.18	13.70	16.00	1.90	10.00	13.47	0.33	n/a	0.36	03A7
03A8	NBFRI	1544+50.00 R 4	Curb	2.74	11.30	16.00	2.00	10.00	10.37	0.33	n/a	0.01	03A7
03A9	NBFRI	1547+56.00 R 4	Curb	4.41	13.53	16.00	2.00	10.00	13.60	0.33	n/a	0.40	03G1
03B1	35NGP	1542+30.98	Grate	3.72	9.89	10.00	2.50	n/a	n/a	n/a	3' X 3.33'	1.05	03B2
03B2	35NGP	1543+43.06	Grate	2.66	9.69	10.00	2.00	n/a	n/a	n/a	3' X 3.33'	0.75	03B3
03B3	35NGP	1544+67.77	Grate	2.49	7.68	10.00	2.50	n/a	n/a	n/a	3' X 3.33'	0.51	03B4
03B4	35NGP	1545+92.43	Grate	2.25	7.17	12.00	2.50	n/a	n/a	n/a	3' X 3.33'	0.42	03B5
03B5	35NGP	1547+25.00	Grate	2.28	7.21	12.00	2.50	n/a	n/a	n/a	3' X 3.33'	0.43	03H2
03C1	35ML	1542+55.00	Grate	2.02	9.30	10.00	2.00	n/a	n/a	n/a	3' X 3.33'	0.49	03C2
03E1	35SGP	1542+71.83	Grate	2.42	9.13	10.00	2.50	n/a	n/a	n/a	3' X 3.33'	0.53	03E2
03E2	35SGP	1544+71.72	Grate	3.01	8.56	10.00	2.50	n/a	n/a	n/a	3' X 3.33'	0.73	03E3
03E3	35SGP	1547+00.73	Grate	3.85	8.91	10.00	2.50	n/a	n/a	n/a	3' X 3.33'	1.04	03K1
03F1	SBFRI	133+85.00 R 3	Curb	4.76	10.67	16.00	2.00	15.00	19.47	0.33	n/a	0.34	03F2
03F2	SBFRI	134+75.00 R 3	Curb	2.42	9.16	16.00	2.00	10.00	11.67	0.33	n/a	0.07	03F4
03F4	SBFRI	135+70.00 R 3	Curb	1.76	16.32	16.00	1.00	10.00	9.32	0.33	n/a	0.00	
03F9	SBFRI	140+30.00 R 3	Curb	1.80	10.70	16.00	2.00	5.00	7.19	0.33	n/a	0.21	03F10
03F10	SBFRI	141+45.00 R 3	Curb	1.46	9.90	16.00	2.00	10.00	6.38	0.33	n/a	0.00	03F11
03F12	SBFRI	143+00.00 R 3	Curb	9.94	16.05	16.00	2.00	20.00	25.38	0.33	n/a	0.61	03F11
03F13	SBFRI	143+50.00 R 3	Curb	8.06	13.67	16.00	2.00	20.00	24.84	0.33	n/a	0.42	03F12
03G2	NBFRI	1548+95.00 R 4	Curb	4.20	13.24	16.00	2.00	10.00	13.28	0.33	n/a	0.34	03G1
03G3	NBFRI	1550+28.00 R 4	Curb	6.29	11.68	16.00	2.00	20.00	23.25	0.33	n/a	0.18	03G2
03G6	NBFRI	1551+53.00 R 4	Curb	11.47	13.62	16.00	2.00	15.00	35.73	0.33	n/a	4.30	03G3
03G7	NBFRI	1552+35.00 R 4	Curb	3.68	9.90	16.00	2.00	15.00	16.34	0.33	n/a	0.04	03G6
03G9	NBFRI	1553+00.00 R 4	Curb	9.85	14.49	16.00	2.00	15.00	28.44	0.33	n/a	2.56	03G7
03H2	35NGP	1548+75.00	Grate	2.47	8.06	12.00	2.50	n/a	n/a	n/a	3' X 3.33'	0.52	03H3
03H3	35NGP	1550+20.00	Grate	2.53	9.52	12.00	2.50	n/a	n/a	n/a	3' X 3.33'	0.57	03H4
03H7	35NGP	1557+56.76	Grate	3.14	9.15	12.00	2.50	n/a	n/a	n/a	3' X 3.33'	0.80	03H6
03K1	35SGP	1549+15.00	Grate	3.78	9.27	10.00	2.50	n/a	n/a	n/a	3' X 3.33'	1.04	03K2
03L1	SBFRI	144+30.00 R 3	Curb	15.29	15.97	16.00	2.00	15.00	39.64	0.33	n/a	6.50	03F13
03L2	SBFRI	144+98.06 R 3	Curb	5.92	10.74	16.00	2.00	20.00	24.11	0.33	n/a	0.25	03L1
03L3	SBFRI	147+50.00 R 3	Curb	11.11	15.90	16.00	2.00	20.00	28.78	0.33	n/a	1.31	03L2
04A1	NBFRI	1560+15.00 R 4	Curb	4.88	15.42	16.00	2.00	10.00	12.90	0.33	n/a	0.33	03G7
04A3	NBFRI	1564+45.00 R 4	Curb	4.92	14.54	16.00	2.00	10.00	13.95	0.33	n/a	0.51	04A1
04A5	NBFRI	1568+00.00 R 4	Curb	7.04	12.80	16.00	2.00	15.00	23.41	0.33	n/a	1.11	04A3
04A6	NBFRI	1572+45.00 R 4	Curb	9.39	16.44	16.00	2.00	15.00	23.28	0.33	n/a	1.46	04A5
04A7	NBFRI	1573+53.00 R 4	Curb	8.36	15.74	16.00	2.00	20.00	21.80	0.33	n/a	0.09	04A6
04A8	NBFRI	1575+50.00 R 4	Curb	8.25	15.66	16.00	2.00	15.00	21.62	0.33	n/a	0.98	04A7
04A9	NBFRI	1578+70.00 R 4	Curb	3.69	13.71	16.00	2.00	10.00	11.15	0.33	n/a	0.06	04A10
04A10	NBFRI	1580+05.00 R 4	Curb	10.41	18.53	16.00	2.00	15.00	22.40	0.33	n/a	1.42	04A11
04A11	NBFRI	1580+80.00 R 4	Curb	4.06	12.50	16.00	2.00	15.00	13.72	0.33	n/a	0.00	04A12
04A12	NBFRI	1582+29.00 R 4	Curb	7.28	15.51	16.00	2.00	10.00	19.25	0.33	n/a	1.95	FCB1
04B1	35NGP	1559+56.90	Grate	2.39	8.46	12.00	2.50	n/a	n/a	n/a	3' X 3.33'	0.51	03H7
04H1	35NGP	1561+07.72	Grate	2.05	8.20	12.00	2.50	n/a	n/a	n/a	3' X 3.33'	0.40	04B1
04H2	35NGP	1562+58.55	Grate	2.00	1.98	12.00	2.50	n/a	n/a	n/a	3' X 3.33'	0.00	04H1
04H3	35NGP	1564+09.37	Grate	2.11	2.04	12.00	2.50	n/a	n/a	n/a	3' X 3.33'	0.00	04H2
FCB1	NBFRI	1585+00.01 R 4	Curb	2.14	11.41	16.00	2.00	5.00	7.94	0.33	n/a	0.36	FCB2
FCB2	NBFRI	1586+60.00 R 4	Curb	1.61	10.26	16.00	2.00	5.00	6.75	0.33	n/a	0.14	FCB3
FCB4	NBFRI	1587+50.00 R 4	Curb	3.16	11.72	16.00	2.00	10.00	11.46	0.33	n/a	0.08	FCB3

STATE OF TEXAS
THOMAS E. T. COCHILL
87665
LICENSED
PROFESSIONAL ENGINEER

Thomas E. T. Cochill
7/6/12

CP&Y, INC.
TBPE REGISTRATION NO. F-1741

Texas Department of Transportation
© 2012

IH 35W FROM NORTH TARRANT PKWY TO IH 820

DRAINAGE COMPUTATIONS

ON-GRADE INLET COMPUTATIONS

SHEET 6 OF 19

DESIGN	FED. RD. DIV. NO.	FEDERAL AID PROJECT NO.		HIGHWAY NO.
CPY	6	(SEE TITLE SHEET)		IH 35W
GRAPHICS	STATE	DISTRICT	COUNTY	SHEET NO.
CPY	TEXAS	FTW	TARRANT	1191
CHECK	CONTROL	SECTION	JOB	
CPY	0014	16	255, ETC.	

DRAWING DATE: 7/13/2012 FILENAME: S3BDCOMP02.dgn

SAG INLETS, CSJ: 0014-16-255

INLET ID	BASELINE	STATION	TYPE	Q 10 YR (CFS)	DISCHARGE LEFT (CFS)	DISCHARGE RIGHT (CFS)	PONDED WIDTH LEFT (FT)	PONDED WIDTH RIGHT (FT)	SLOPE LEFT (FT)	SLOPE RIGHT (FT)	INLET LENGTH (FT)	GRATE INLET SIZE (FT)	CURB DEPRESSION (FT)	GRATE AREA (SF)	GRATE PERIMET (CFS)	CAPACITY CFS	ACTUAL HEAD (FT)	ALLOWABLE HEAD (FT)
SYSTEM BFA																		
BFA8X	SBFRI	3124+30.63	Curb	6.34	3.17	3.17	6.54	6.54	1.00	1.00	15.00	n/a	0.33	n/a	n/a	40.02	0.29	0.5
BFA8AX	SBFRI	3124+40.65	Grate	3.97	1.98	1.98	9.12	9.12	1.00	1.00	n/a	5' X 3'	n/a	7.07	12.00	18.52	0.36	1.00
BFA8BX	SBFRI	3125+10.49	Grate	2.27	1.14	1.14	2.09	2.09	1.00	1.00	n/a	5' X 3'	n/a	7.07	12.00	18.52	0.25	1.00
BFA8CX	35W ML	1526+95.33	Grate	9.94	4.97	4.97	3.02	3.02	0.50	0.50	n/a	5' X 3'	n/a	7.07	12.00	18.52	0.66	1.00
BFA14X	35W ML	1524+39.18	Grate	4.09	2.04	2.04	2.29	2.29	2.00	2.00	n/a	5' X 3'	n/a	7.07	12.00	18.52	0.37	1.00
BFA16	35W ML	1522+00.00	Grate	13.07	6.54	6.54	3.54	3.54	2.00	2.00	n/a	5' X 3'	n/a	7.07	12.00	18.52	0.79	1.00
BFA13	BB-35S	13+34.14	Grate	1.52	0.76	0.76	7.25	7.25	0.50	0.50	n/a	3' X 3.33'	n/a	2.59	8.00	6.96	0.25	0.25
BFA33	SBFRI	108+89.00	Grate	24.42	12.21	12.21	2.74	2.74	2.00	2.00	n/a	3' X 3.33'	n/a	7.07	12.00	18.52	1.65	2.00
BFA33X	SBFRI	108+00.76	Curb	5.15	4.12	1.03	13.19	8.78	0.60	0.33	10.00	n/a	0.33	n/a	n/a	28.52	0.32	0.5
BFA25	35W ML	1509+00.24	Grate	8.19	5.73	2.46	2.46	1.79	2.00	2.00	n/a	3' X 3.33'	n/a	7.07	12.00	18.52	0.58	1.00
BFA28X	SBFRI	99+75.20	Grate	40.74	20.37	20.37	3.32	3.32	2.00	2.00	n/a	5' X 3'	n/a	7.07	12.00	18.52	4.60*	2.00
BFA42	SBFRI	88+60.30	Curb	4.44	2.22	2.22	9.75	9.66	0.88	0.92	20.00	n/a	0.33	n/a	n/a	51.52	0.20	0.5
SYSTEM BFC																		
BFC7	BB-MLS	39+68.95	Grate	1.79	0.90	0.90	5.35	7.18	2.40	0.50	n/a	5' X 3'	n/a	7.81	12.67	19.56	0.20	0.25
BFC11	35W ML	1528+79.37	Grate	3.63	1.81	1.81	8.98	7.85	0.43	0.88	n/a	5' X 3'	n/a	2.59	8.00	6.96	0.23	0.33
BFC18	35W ML	1523+50.00	Grate	1.77	1.41	0.35	6.13	3.65	2.00	2.00	n/a	5' X 3'	n/a	7.07	12.00	18.52	0.21	0.25
SYSTEM BFD																		
BFD37	35NGP	1528+30.00	Grate	5.79	2.89	2.89	10.40	9.52	0.50	0.80	n/a	3' X 3.33'	n/a	7.81	12.67	19.56	0.44	0.50
BFD34	35N-BB	22+31.66	Grate	0.61	0.24	0.37	4.89	4.93	0.42	0.90	n/a	3' X 3.33'	n/a	7.81	12.67	19.56	0.10	0.25
BFD12	35ML	1525+15.00	Grate	7.58	3.79	3.79	10.20	10.20	2.00	2.00	n/a	5' X 3'	n/a	7.07	12.00	18.52	0.55	1.00
BFD39	35ML	1527+00.00	Grate	5.78	3.47	2.31	2.03	1.75	2.00	2.00	n/a	5' X 3'	n/a	7.07	12.00	18.52	0.46	1.00
BFD41	35ML	1523+30.41	Curb	3.28	1.64	1.64	1.54	1.54	2.00	2.00	20	n/a	0.75	n/a	n/a	52.21	0.16	1.00
BFD7	35ML	1520+50.00	Curb	3.68	1.84	1.84	2.20	2.20	2.00	2.00	20	n/a	0.75	n/a	n/a	52.21	0.17	1.00
BFD4	35ML	1528+79.38	Grate	5.24	2.10	3.15	9.48	9.65	0.43	0.88	n/a	2' X 2'	n/a	2.59	8.00	1.54	0.57	1.00
BFD15A	35ML	1520+00.00	Grate	2.67	2.41	0.27	2.32	0.64	0.85	10.00	n/a	3' X 3.33'	n/a	7.07	12.00	6.55	0.28	0.50
BFD31	MLN-BB	18+89.29	Grate	1.89	0.94	0.94	3.47	3.47	1.00	1.00	n/a	2' X 2'	n/a	2.59	8.00	6.96	0.29	0.50
BFD8	MLN-BB	38+86.44	Grate	2.20	1.32	0.88	6.21	6.91	2.50	0.63	n/a	3' X 3.33'	n/a	7.81	12.67	19.56	0.23	0.50
BFD18A	35ML	1512+50.00	Grate	2.71	2.44	0.27	2.33	0.65	0.85	10.00	n/a	5' X 3'	n/a	7.07	12.00	6.55	0.28	1.00
BFD20A	35ML	1503+50.00	Grate	1.57	1.41	0.16	1.90	0.53	0.85	10.00	n/a	5' X 3'	n/a	7.07	12.00	6.55	0.19	1.00
BFD22A	35ML	1498+92.00	Grate	1.50	1.35	0.15	1.68	0.52	1.50	10.00	n/a	5' X 3'	n/a	7.07	12.00	6.55	0.19	1.00
BFD24A	35ML	1491+50.00	Grate	1.49	1.34	0.15	1.67	0.52	1.50	10.00	n/a	5' X 3'	n/a	7.07	12.00	6.55	0.19	1.00
SYSTEM BFE																		
BFE3X	NBFRI	1530+47.75	Grate	7.07	3.54	3.54	1.72	1.72	2.00	2.00	n/a	5' X 3'	n/a	7.07	12.00	18.52	0.53	1.00
BFE4X	NBFRI	1527+83.70	Grate	16.58	8.29	8.29	2.82	2.82	2.00	2.00	n/a	5' X 3'	n/a	7.07	12.00	18.52	0.93	1.00
BFE11X	NBFRI	1525+46.06	Grate	4.38	2.19	2.19	1.71	1.71	2.00	2.00	n/a	5' X 3'	n/a	7.07	12.00	18.52	0.38	1.00
BFE6X	35W ML	1527+10.40	Grate	1.65	0.49	1.15	0.98	1.04	2.00	8.00	n/a	5' X 3'	n/a	7.07	12.00	18.52	0.20	1.00
BFE14X	NBFRI	1523+34.87	Grate	15.55	7.78	7.78	2.75	2.75	2.00	2.00	n/a	5' X 3'	n/a	7.07	12.00	18.52	0.89	1.00
BFE10	NBFRI	1519+89.64	Grate	2.61	0.26	2.35	0.64	1.96	10.00	2.00	n/a	5' X 3'	n/a	7.07	12.00	6.55	0.27	1.00
BFE15X	35W ML	1524+63.35	Grate	24.73	12.37	12.37	3.27	3.27	2.00	2.00	n/a	5' X 3'	n/a	7.07	12.00	18.52	1.70*	1.00
BFE20X	35N-BB	19+22.66	Grate	5.12	2.56	2.56	1.82	1.82	2.00	2.00	n/a	5' X 3'	n/a	7.07	12.00	18.52	0.43	1.00
BFE16X	35W ML	1528+92.55	Grate	11.10	5.55	5.55	2.43	2.43	2.00	2.00	n/a	5' X 3'	n/a	7.07	12.00	18.52	0.71	1.00
BFE17X	NBFRI	4513+57.36	Grate	4.27	2.14	2.14	1.70	1.70	2.00	2.00	n/a	5' X 3'	n/a	7.07	12.00	18.52	0.38	1.00
BFE18X	35W ML	1523+30.42	Grate	8.32	4.16	4.16	2.18	2.18	2.00	2.00	n/a	5' X 3'	n/a	7.07	12.00	18.52	0.59	1.00
SYSTEM 01A																		
01A1	35W ML	1429+50.00	Grate	6.28	5.02	1.26	3.65	2.48	1.00	0.50	n/a	5' X 3'	n/a	7.07	12.00	30.04	0.49	0.50
SYSTEM 01C																		
01C2	35W ML	1429+61.40	Grate	13.74	12.37	1.37	3.59	1.42	0.47	0.82	n/a	5' X 3'	n/a	7.07	12.00	32.91	0.82	1.00
01C1	35W ML	1429+50.00	Grate	1.97	1.57	0.39	2.60	1.67	0.60	0.40	n/a	5' X 3'	n/a	7.07	12.00	30.04	0.22	1.00
SYSTEM 01D																		
01D6	35W ML	1416+00.00	Grate	11.49	10.34	1.15	3.32	1.40	0.50	0.61	n/a	5' X 3'	n/a	7.07	12.00	40.30	0.73	1.00
SYSTEM 01J																		
01J3	35N-NTP	22+50.00	Grate	7.46	5.97	1.49	4.63	2.64	0.40	0.50	n/a	5' X 3'	n/a	7.07	12.00	18.52	0.55	0.75
01J2	35N-NTP	16+88.15	Grate	1.66	0.83	0.83	1.86	2.21	1.00	0.40	n/a	5' X 3'	n/a	7.07	12.00	18.52	0.20	0.25
SYSTEM 02B																		
02B9	35W ML	1460+76.00	Grate	4.37	2.40	1.97	10.11	9.62	0.40	0.35	n/a	3' X 3.33	n/a	7.81	12.67	19.56	0.37	0.50
02B11	35W ML	1459+21.00	Grate	5.34	4.81	0.53	10.85	4.85	1.10	1.00	n/a	5' X 3'	n/a	7.07	12.00	26.87	0.44	1.00
SYSTEM 02C																		
02C3	DC MLN-287W	69+05.32	Grate	3.46	1.56	1.91	6.73	9.86	1.75	0.34	n/a	3' X 3.33	n/a	7.81	12.67	19.56	0.32	0.50
02C2	35W ML	1460+93.50	Grate	6.37	5.73	0.64	3.18	0.90	0.50	5.25	n/a	5' X 3'	n/a	7.07	12.00	26.87	0.49	1.00
02C7	35W ML	1460+94.00	Grate	3.67	1.83	1.83	1.98	2.08	0.65	0.50	n/a	5' X 3'	n/a	7.07	12.00	26.87	0.34	1.00
SYSTEM 02D																		
02D7	35W ML	1463+50.00	Grate	3.19	0.32	2.87	1.08	2.31	0.50	0.70	n/a	5' X 3'	n/a	7.07	12.00	26.87	0.31	0.50
SYSTEM 02E																		
02E5	35W ML	1467+50.00	Grate	13.43	2.69	10.74	2.44	3.61	0.45	0.90	n/a	5' X 3'	n/a	7.07	12.00	32.91	0.81	1.00
SYSTEM 02H																		
02H6	NBFRI	1474+10.50	Curb	5.07	2.54	2.54	13.16	10.87	0.23	0.64	10.00	n/a	0.33	n/a	n/a	28.52	0.32	0.50
SYSTEM 02J																		
02J1	35N-287W	78+51.89	Grate	2.87	1.15	1.72	2.10	2.27	1.00	1.50	n/a	5' X 3'	n/a	7.07	12.00	30.04	0.29	0.50

* EXISTING INLET TO REMAIN

NOTE:

1. SAG INLET AREA REDUCTION FACTOR = 0.5

STATE OF TEXAS
B. VANDERWALT
81580
LICENSED
PROFESSIONAL ENGINEER
7/11/2012

I. S. ENGINEERS, LLC
TBPE REG. # F-11657

Texas Department of Transportation
© 2012

IH 35W FROM NORTH TARRANT PKWY TO IH 820

DRAINAGE COMPUTATIONS
SAG INLET COMPUTATIONS

SHEET 7 OF 19

DESIGN	FED.RD. DIV.NO.	FEDERAL AID PROJECT NO.		HIGHWAY NO.
BV	6	(SEE TITLE SHEET)		IH 35W
GRAPHICS	STATE	DISTRICT	COUNTY	SHEET NO.
ZS	TEXAS	FTW	TARRANT	1192
CHECK	CONTROL	SECTION	JOB	
SY / MNM	0014	16	255, ETC.	

FILENAME: S3BDRCOMP05.dgn

DRAWING DATE: 7/11/2012

SAG INLETS, CSJ: 0014-16-255

INLET ID	BASELINE	STATION	TYPE	Q 10 YR (CFS)	DISCHARGE LEFT (CFS)	DISCHARGE RIGHT (CFS)	PONDED WIDTH LEFT (FT)	PONDED WIDTH RIGHT (FT)	SLOPE LEFT (FT)	SLOPE RIGHT (FT)	INLET LENGTH (FT)	GRATE INLET SIZE (FT)	CURB DEPRESSION (FT)	GRATE AREA (SF)	GRATE PERIMET (CFS)	CAPACITY CFS	ACTUAL HEAD (FT)	ALLOWABLE HEAD (FT)
SYSTEM 02AA																		
02A1	35W ML	1450+45.00	Grate	18.83	17.00	1.83	4.10	1.63	0.43	0.72	n/a	5' X 3'	n/a	7.07	12.00	40.30	1.01	1.75
02A2	35W ML	1449+13.62	Grate	23.99	21.59	2.40	4.37	1.85	0.50	0.61	n/a	5' X 3'	n/a	7.07	12.00	40.30	1.59	1.75
SYSTEM 02G2																		
02G12	SBFRI	59+03.26	Curb	7.16	4.30	2.86	15.16	13.28	0.31	0.28	10.00	n/a	0.33	n/a	n/a	10.08	0.40	0.50
02G11	SBFRI	59+03.00	Grate	11.37	1.14	10.23	1.15	5.33	25.00	0.55	n/a	3' X 3.33	n/a	7.07	12.00	26.87	0.72	1.25
02G27	SBFRI	60+00.00	Grate	6.59	0.66	5.93	0.93	4.35	25.00	0.55	n/a	5' X 3'	n/a	7.07	12.00	26.87	0.50	1.00
02G19	SBFRI	62+50.00	Grate	9.16	0.92	8.25	1.06	4.92	25.00	0.55	n/a	5' X 3'	n/a	7.07	12.00	26.87	0.63	1.00
02G30	SBFRI	61+00.00	Grate	8.59	0.86	7.73	1.03	4.80	25.00	0.55	n/a	5' X 3'	n/a	7.07	12.00	26.87	0.60	1.00
02G18	SBFRI	64+00.00	Grate	8.98	0.90	8.08	1.05	4.88	25.00	0.55	n/a	5' X 3'	n/a	7.07	12.00	26.87	0.62	1.00
02G14	SBFRI	67+00.00	Grate	8.74	0.87	7.86	1.04	4.83	25.00	0.55	n/a	5' X 3'	n/a	7.07	12.00	26.87	0.61	1.00
02G25	SBFRI	65+50.00	Grate	9.27	0.93	8.34	1.06	4.94	25.00	0.55	n/a	5' X 3'	n/a	7.07	12.00	26.87	0.63	1.00
02G8	SBFRI	68+50.00	Grate	7.56	0.76	6.80	0.98	4.58	25.00	0.55	n/a	5' X 3'	n/a	7.07	12.00	26.87	0.55	1.00
SYSTEM 02G2																		
02F10	SBFRI	30+50.00	Grate	13.34	12.68	0.67	5.88	0.94	0.50	25.00	n/a	5' X 3'	n/a	7.07	12.00	26.87	0.80	2.00
SYSTEM 02G1																		
02G22	35ML	1478+97.27	Grate	14.58	2.92	11.66	3.28	5.01	0.60	1.00	n/a	5' X 3'	n/a	7.07	12.00	26.87	0.85	2.00

STATE OF TEXAS
SHAFEE YUSUF
94963
LICENSED
PROFESSIONAL ENGINEER
7/11/12

I. S. ENGINEERS, LLC
TBPE REG. # F-11657

Texas Department of Transportation
© 2012

IH 35W FROM NORTH TARRANT PKWY TO IH 820

DRAINAGE COMPUTATIONS
SAG INLET COMPUTATIONS

SHEET 8 OF 19

DESIGN	FED.RD. DIV.NO.	FEDERAL AID PROJECT NO.		HIGHWAY NO.
BV	6	(SEE TITLE SHEET)		IH 35W
GRAPHICS ZS	STATE	DISTRICT	COUNTY	SHEET NO.
CHECK SY	TEXAS	FTW	TARRANT	1193
CHECK MNM	CONTROL 0014	SECTION 16	JOB 255, ETC.	

FILENAME: S3BDRCOMP05A.dgn
DRAWING DATE: 7/11/2012

SAG INLETS, CSJ: 0014-16-255

INLET ID	BASELINE	STATION	TYPE	Q	DISCHARGE LEFT	DISCHARGE RIGHT	PONDED WIDTH LEFT	PONDED WIDTH RIGHT	SLOPE LEFT	SLOPE RIGHT	INLET LENGTH	GRATE INLET SIZE	CURB DEPRESSION	GRATE AREA	GRATE PERIMETER	CAPACITY	ACTUAL HEAD	ALLOWABLE HEAD
				(CFS)	(CFS)		(CFS)		(CFS)		(FT)	(FT)	(FT)	(SF)	(FT)	(CFS)	(FT)	(FT)
BFG2	35NGP	1537+68.62	Grate	0.42	0.21	0.21	4.88	4.88	0.20	0.20	4.33	3' X 3.33'	n/a	7.07	12.67	2.45	0.08	0.25
03A3	WCBSN	12+25.00	Curb	1.83	0.92	0.92	5.56	8.31	3.00	0.35	5.00	n/a	0.33	n/a	n/a	6.02	0.23	0.50
03A4	WCB	15+06.00	Curb	0.83	0.54	0.29	9.52	6.98	0.60	0.91	5.00	n/a	0.33	n/a	n/a	3.68	0.13	0.50
03A5	WCBNS	11+37.00	Curb	1.48	0.02	1.47	2.12	11.87	0.35	0.35	10.00	n/a	0.33	n/a	n/a	6.16	0.14	0.50
03A7	NBFRI	1544+14.00 R 4	Curb	5.58	3.63	1.95	12.57	9.22	0.60	0.91	15.00	n/a	0.33	n/a	n/a	8.64	0.27	0.50
03C2	35ML	1545+00.00	Drop	3.21	3.18	0.03	1.98	0.22	1.93	25.00	5.00	5' X 3'	n/a	7.07	12.00	18.52	0.31	0.50
03D1	35ML	1542+50.00	Drop	2.17	0.02	2.15	0.19	1.87	25.00	1.19	5.00	5' X 3'	n/a	7.07	12.00	18.52	0.24	0.50
03D2	35ML	1545+00.00	Drop	2.29	0.02	2.27	0.19	1.75	25.00	1.88	5.00	5' X 3'	n/a	7.07	12.00	18.52	0.25	0.50
03E4	35SGP	1544+99.63	Drop	2.50	1.25	1.25	1.79	1.41	0.50	1.83	5.00	5' X 3'	n/a	7.07	12.00	18.52	0.26	0.50
03F3	SBFRI	134+71.68 R 3	Grate	4.84	0.05	4.80	3.08	17.19	2.00	2.00	4.33	3' X 3.33'	n/a	7.07	12.00	6.55	0.41	0.50
03F5	SBFRI	136+27.93 R 3	Curb	3.00	1.50	1.50	9.35	9.35	0.50	0.50	15.00	n/a	0.33	n/a	n/a	14.15	0.18	0.50
03F6	WCB	19+27.00	Curb	9.05	8.60	0.45	15.11	6.16	1.50	0.50	20.00	n/a	0.33	n/a	n/a	11.13	0.31	0.50
03F7	WCB	19+01.31	Curb	4.09	0.21	3.89	4.58	12.95	0.50	0.70	10.00	n/a	0.33	n/a	n/a	6.16	0.27	0.50
03F11	SBFRI	142+10.00 R 3	Curb	5.10	2.55	2.55	8.15	12.19	3.00	0.35	10.00	n/a	0.33	n/a	n/a	10.08	0.32	0.50
03G1	NBFRI	1548+59.00 R 4	Curb	3.92	3.14	0.78	11.91	4.99	0.60	3.90	10.00	n/a	0.33	n/a	n/a	10.08	0.27	0.50
03H1	35NGP	1548+29.22	Drop	0.86	0.52	0.35	1.30	0.98	0.48	1.00	5.00	5' X 3'	n/a	7.07	12.00	18.52	0.13	0.50
03H4	35NGP	1550+80.00	Drop	4.60	0.05	4.56	0.25	2.25	25.00	2.00	5.00	5' X 3'	n/a	7.07	12.00	18.52	0.40	0.50
03H5	35NGP	1552+56.76	Drop	3.81	0.04	3.77	0.23	2.10	25.00	2.00	5.00	5' X 3'	n/a	7.07	12.00	18.52	0.35	0.50
03H6	35NGP	1555+06.76	Drop	4.49	0.05	4.44	0.25	2.38	25.00	1.41	5.00	5' X 3'	n/a	7.07	12.00	18.52	0.39	0.50
03I1	35ML	1548+50.00	Drop	4.01	3.97	0.04	2.14	0.24	2.00	25.00	5.00	5' X 3'	n/a	7.07	12.00	18.52	0.36	0.50
03I2	35ML	1552+00.00	Drop	4.15	4.11	0.04	2.81	0.24	0.50	25.00	5.00	5' X 3'	n/a	7.07	12.00	18.52	0.37	0.50
03I3	35ML	1552+50.00	Drop	1.69	0.85	0.85	1.55	1.55	0.50	0.50	5.00	5' X 3'	n/a	7.07	12.00	18.52	0.20	0.50
03I4	35ML	1553+00.00	Drop	3.57	0.04	3.54	0.23	2.66	25.00	0.50	5.00	5' X 3'	n/a	7.07	12.00	18.52	0.33	0.50
03I5	35ML	1556+00.00	Drop	4.31	0.04	4.27	0.25	2.42	25.00	1.20	5.00	5' X 3'	n/a	7.07	12.00	18.52	0.38	0.50
03J1	35ML	1548+50.00	Drop	3.42	0.03	3.39	0.23	2.05	25.00	1.85	5.00	5' X 3'	n/a	7.07	12.00	18.52	0.32	0.50
03J2	35ML	1551+00.00	Drop	2.58	0.03	2.55	0.20	2.32	25.00	0.54	5.00	5' X 3'	n/a	7.07	12.00	18.52	0.27	0.50
03J3	35ML	1551+59.81	Drop	1.34	0.67	0.67	1.92	1.92	0.10	0.10	5.00	5' X 3'	n/a	7.07	12.00	18.52	0.17	0.50
03J4	35ML	1552+00.00	Drop	2.99	2.96	0.03	2.81	0.21	0.26	25.00	5.00	5' X 3'	n/a	7.07	12.00	18.52	0.30	0.50
03J5	35ML	1555+00.00	Drop	2.91	2.88	0.03	2.11	0.21	1.12	25.00	5.00	5' X 3'	n/a	7.07	12.00	18.52	0.29	0.50
03J6	35ML	1558+00.00	Drop	2.89	2.86	0.03	2.10	0.21	1.14	25.00	5.00	5' X 3'	n/a	7.07	12.00	18.52	0.29	0.50
03K2	35SGP	1548+06.34	Drop	3.51	0.04	3.48	0.23	1.95	25.00	2.50	5.00	5' X 3'	n/a	7.07	12.00	18.52	0.33	0.50
03K3	35SGP	1550+53.56	Drop	4.33	0.04	4.29	0.25	2.65	25.00	0.75	5.00	5' X 3'	n/a	7.07	12.00	18.52	0.38	0.50
03K4	35SGP	1553+51.28	Drop	3.50	0.04	3.47	0.23	2.44	25.00	0.75	5.00	5' X 3'	n/a	7.07	12.00	18.52	0.33	0.50
03K5	35SGP	1556+51.88	Drop	2.84	0.03	2.81	0.21	2.61	25.00	0.35	5.00	5' X 3'	n/a	7.07	12.00	18.52	0.29	0.50
03L4	35ML	1552+50.00	Grate	0.69	0.34	0.34	0.00	0.00	0.50	0.50	4.33	3' X 3.33'	n/a	7.07	12.00	32.91	0.11	3.00
03L7	35ML	1557+00.00	Grate	27.31	15.02	12.29	0.00	0.00	0.50	2.00	4.33	3' X 3.33'	n/a	7.07	12.00	32.91	2.07	3.00
03L8	35ML	1557+50.00	Grate	20.35	11.19	9.16	0.00	0.00	0.50	2.00	4.33	3' X 3.33'	n/a	7.07	12.00	32.91	1.15	3.00
04A13	NBFRI	1582+31.53 R 4	Grate	7.67	0.08	7.59	1.40	13.24	33.00	2.00	4.33	3' X 3.33'	n/a	7.07	12.00	18.52	0.56	2.00
04B2	35NGP	1559+56.81	Drop	1.27	1.01	0.25	1.97	1.18	0.20	0.20	5.00	5' X 3'	n/a	7.07	12.00	18.52	0.17	0.50
04B3	35NGP	1560+07.15	Drop	0.92	0.01	0.91	0.14	1.71	25.00	0.35	5.00	5' X 3'	n/a	7.07	12.00	18.52	0.14	0.50
04C1	35ML	1560+00.00	Drop	3.44	0.03	3.41	0.23	2.30	25.00	1.00	5.00	5' X 3'	n/a	7.07	12.00	18.52	0.33	0.50
04D1	35ML	1561+00.00	Drop	2.87	2.84	0.03	2.17	0.21	0.94	25.00	5.00	5' X 3'	n/a	7.07	12.00	18.52	0.29	0.50
04H4	35NGP	1564+59.65	Drop	2.02	0.61	1.41	6.15	8.04	0.36	0.47	5.00	5' X 3'	n/a	7.07	12.00	18.52	0.23	0.50
04H5	35NGP	1566+10.47	Drop	5.16	0.05	5.11	0.26	2.71	25.00	0.94	5.00	5' X 3'	n/a	7.07	12.00	18.52	0.43	0.50
04H6	35NGP	1564+08.95	Drop	0.28	0.00	0.28	0.09	0.95	25.00	0.76	5.00	5' X 3'	n/a	7.07	12.00	18.52	0.06	0.50
04H7	35NGP	1569+62.39	Drop	2.00	1.98	0.02	2.28	0.18	0.35	25.00	5.00	5' X 3'	n/a	7.07	12.00	18.52	0.23	0.50
04H8	35NGP	1570+12.67	Drop	2.67	1.34	1.34	1.97	1.80	0.35	0.56	5.00	5' X 3'	n/a	7.07	12.00	18.52	0.28	0.50
04H9	35NGP	1570+70.00	Drop	3.32	0.03	3.28	0.22	2.51	25.00	0.58	5.00	5' X 3'	n/a	7.07	12.00	18.52	0.32	0.50
04H10	35NGP	1572+64.04	Drop	5.02	0.05	4.97	0.26	3.05	25.00	0.47	5.00	5' X 3'	n/a	7.07	12.00	18.52	0.42	0.50
04H11	35NGP	1575+65.69	Drop	4.76	0.05	4.72	0.25	2.88	25.00	0.58	5.00	5' X 3'	n/a	7.07	12.00	18.52	0.40	0.50
04H12	35NGP	1578+67.34	Drop	4.71	0.05	4.66	0.25	2.88	25.00	0.56	5.00	5' X 3'	n/a	7.07	12.00	18.52	0.40	0.50
04H13	35NGP	1581+67.59	Drop	4.49	0.05	4.44	0.25	2.81	25.00	0.58	5.00	5' X 3'	n/a	7.07	12.00	18.52	0.39	0.50
04H14	35NGP	1584+67.59	Drop	6.64	0.07	6.57	0.29	3.58	25.00	0.35	5.00	5' X 3'	n/a	7.07	12.00	18.52	0.51	0.50
04H15	35NGP	1562+08.05	Drop	0.98	0.01	0.97	0.14	1.54	25.00	0.70	5.00	5' X 3'	n/a	7.07	12.00	18.52	0.14	0.50
FCB3	NBFRI	1587+05.00 R 4	Curb	0.91	0.45	0.45	6.09	5.04	0.45	1.23	5.00	n/a	0.33	n/a	n/a	6.02	0.14	0.50

NOTE:

1. SAG INLET AREA REDUCTION FACTOR = 0.5

STATE OF TEXAS
THOMAS E. T. COCHILL
87665
LICENSED
PROFESSIONAL ENGINEER

Thomas E. T. Cochill
7/6/12

CP&Y, INC.
TBPE REGISTRATION NO. F-1741

Texas Department of Transportation
© 2012

IH 35W FROM NORTH TARRANT PKWY TO IH 820

DRAINAGE COMPUTATIONS

SAG INLET COMPUTATIONS

SHEET 9 OF 19

DESIGN	FED. RD. DIV. NO.	FEDERAL AID PROJECT NO.		HIGHWAY NO.
CPY	6	(SEE TITLE SHEET)		IH 35W
GRAPHICS CPY	STATE	DISTRICT	COUNTY	SHEET NO.
CHECK CPY	TEXAS	FTW	TARRANT	1194
CHECK CPY	CONTROL 0014	SECTION 16	JOB 255, ETC.	

DRAWING DATE: 7/13/2012 FILENAME: S3BDCOMP03.dgn

SAG INLETS, CSJ: 0014-16-255

INLET ID	BASELINE	STATION	TYPE	Q	DISCHARGE LEFT	DISCHARGE RIGHT	PONDED WIDTH LEFT	PONDED WIDTH RIGHT	SLOPE LEFT	SLOPE RIGHT	INLET LENGTH	GRATE INLET SIZE	CURB DEPRESSION	GRATE AREA	GRATE PERIMETER	CAPACITY	ACTUAL HEAD	ALLOWABLE HEAD
				(CFS)	(CFS)		(CFS)		(CFS)		(FT)	(FT)	(FT)	(SF)	(FT)	(CFS)	(FT)	(FT)
04I1	35ML	1563+00.00	Drop	3.43	0.03	3.39	0.23	2.43	25.00	0.74	5.00	5' X 3'	n/a	7.07	12.00	18.52	0.33	0.50
04I2	35ML	1566+00.00	Drop	3.36	0.03	3.33	0.22	2.42	25.00	0.72	5.00	5' X 3'	n/a	7.07	12.00	18.52	0.32	0.50
04I3	35ML	1569+00.00	Drop	3.44	0.03	3.41	0.23	2.62	25.00	0.50	5.00	5' X 3'	n/a	7.07	12.00	18.52	0.33	0.50
04I4	35ML	1572+00.00	Drop	3.42	0.03	3.38	0.22	2.61	25.00	0.50	5.00	5' X 3'	n/a	7.07	12.00	18.52	0.32	0.50
04I5	35ML	1575+00.00	Drop	3.38	0.03	3.34	0.22	2.60	25.00	0.50	5.00	5' X 3'	n/a	7.07	12.00	18.52	0.32	0.50
04I6	35ML	1578+00.00	Drop	3.50	0.04	3.46	0.23	2.63	25.00	0.50	5.00	5' X 3'	n/a	7.07	12.00	18.52	0.33	0.50
04I7	35ML	1581+00.00	Drop	3.41	0.03	3.38	0.22	2.61	25.00	0.50	5.00	5' X 3'	n/a	7.07	12.00	18.52	0.32	0.50
04I8	35ML	1584+00.00	Drop	3.49	0.04	3.46	0.23	2.63	25.00	0.50	5.00	5' X 3'	n/a	7.07	12.00	18.52	0.33	0.50
04I9	35ML	1587+00.00	Drop	3.34	0.03	3.31	0.22	2.59	25.00	0.50	5.00	5' X 3'	n/a	7.07	12.00	18.52	0.32	0.50
04J1	35ML	1564+00.00	Drop	2.91	2.89	0.03	2.24	0.21	0.82	25.00	5.00	5' X 3'	n/a	7.07	12.00	18.52	0.29	0.50
04J2	35ML	1567+00.00	Drop	2.91	2.88	0.03	2.31	0.21	0.70	25.00	5.00	5' X 3'	n/a	7.07	12.00	18.52	0.29	0.50
04J3	35ML	1570+00.00	Drop	2.90	2.87	0.03	2.31	0.21	0.70	25.00	5.00	5' X 3'	n/a	7.07	12.00	18.52	0.29	0.50
04J4	35ML	1573+00.00	Drop	2.90	2.87	0.03	2.34	0.21	0.64	25.00	5.00	5' X 3'	n/a	7.07	12.00	18.52	0.29	0.50
04J5	35ML	1576+00.00	Drop	2.92	2.89	0.03	2.46	0.21	0.50	25.00	5.00	5' X 3'	n/a	7.07	12.00	18.52	0.29	0.50
04J6	35ML	1579+00.00	Drop	2.93	2.90	0.03	2.46	0.21	0.50	25.00	5.00	5' X 3'	n/a	7.07	12.00	18.52	0.29	0.50
04J7	35ML	1582+00.00	Drop	2.91	2.88	0.03	2.57	0.21	0.40	25.00	5.00	5' X 3'	n/a	7.07	12.00	18.52	0.29	0.50
04J8	35ML	1585+00.00	Drop	4.88	4.83	0.05	3.17	0.26	0.36	25.00	5.00	5' X 3'	n/a	7.07	12.00	18.52	0.41	0.50

NOTE:

1. SAG INLET AREA REDUCTION FACTOR = 0.5

STATE OF TEXAS
THOMAS E. T. COCHILL
87665
LICENSED
PROFESSIONAL ENGINEER

Thomas E. T. Cochill
7/6/12

CP&Y, INC.
TBPE REGISTRATION NO. F-1741

Texas Department of Transportation
© 2012

IH 35W FROM NORTH TARRANT PKWY TO IH 820

DRAINAGE COMPUTATIONS

SAG INLET COMPUTATIONS

SHEET 10 OF 19

DESIGN	FED. RD. DIV. NO.	FEDERAL AID PROJECT NO.		HIGHWAY NO.
CPY	6	(SEE TITLE SHEET)		IH 35W
GRAPHICS CPY	STATE	DISTRICT	COUNTY	SHEET NO.
CHECK CPY	TEXAS	FTW	TARRANT	1195
CHECK CPY	CONTROL	SECTION	JOB	
	0014	16	255, ETC.	

DRAWING DATE: 7/13/2012 FILENAME: S3BDCOMP04.dgn

CONVEYANCE COMPUTATIONS, CSJ: 0014-16-255

SYSTEM	UPSTREAM NODE	DOWNSTREAM NODE	RISE	SPAN	N-VALUE	DISCHARGE	CAPACITY	ACTUAL LENGTH	ACTUAL SLOPE	FULL FLOW SLOPE	UNIFORM VELOCITY	UNIFORM DEPTH	ACTUAL VELOCITY UPSTREAM	ACTUAL VELOCITY DOWNSTREAM	ACTUAL DEPTH UPSTREAM	ACTUAL DEPTH DOWNSTREAM	INVERT UPSTREAM	INVERT DOWNSTREAM	UPSTREAM HGL	DOWNSTREAM HGL	COMMENT
BFA	BFA7X	BFA-OUT	6.50	n/a	0.012	181.62	475.20	370.08	0.70	0.10	13.35	2.79	5.47	5.47	6.50	6.50	599.39	596.80	611.01	610.63	
	BFA5X	BFA7X	6.50	n/a	0.012	180.92	475.20	211.70	0.70	0.10	13.30	2.79	5.45	5.45	6.50	6.50	600.87	599.39	611.23	611.01	
	BFA34	BFA7X	2.00	n/a	0.012	1.25	18.98	17.72	0.60	0.00	3.42	0.35	0.80	3.40	1.00	0.35	612.12	612.02	613.12	612.37	
	BFA4X	BFA5X	6.00	n/a	0.012	173.79	372.73	130.00	0.66	0.14	12.94	2.88	6.15	6.15	6.00	6.00	602.23	601.37	611.42	611.23	
	BFA8C	BFA5X	2.50	n/a	0.012	13.57	44.44	70.49	1.00	0.09	7.94	0.95	2.76	2.76	2.50	2.50	603.94	603.24	611.29	611.23	
	BFA2X	BFA4X	1.50	n/a	0.012	6.38	21.95	459.42	3.72	0.31	10.76	0.55	4.13	10.76	1.23	0.55	623.77	606.68	625.00	607.23	
	BFA3X	BFA4X	6.00	n/a	0.012	171.53	372.73	211.22	0.66	0.14	12.90	2.86	6.07	6.07	6.00	6.00	603.64	602.25	611.72	611.42	
	BFA8X	BFA8C	2.50	n/a	0.012	6.34	44.44	22.71	1.00	0.02	6.43	0.64	1.29	1.29	2.50	2.50	603.47	603.24	611.30	611.29	
	BFA8AX	BFA8C	1.50	n/a	0.012	5.14	8.81	36.15	0.60	0.20	5.16	0.83	2.91	2.91	1.50	1.50	605.16	604.94	611.37	611.29	
	BFA8BX	BFA8C	1.50	n/a	0.012	2.27	8.81	76.27	0.60	0.04	4.18	0.52	1.29	1.29	1.50	1.50	605.40	604.94	611.32	611.29	
	BFA1X	BFA2X	1.50	n/a	0.012	4.62	21.96	141.07	3.72	0.16	9.83	0.47	2.86	9.83	1.29	0.47	629.02	623.77	630.31	624.24	
	BFA12X	BFA3X	5.50	n/a	0.012	171.53	417.97	90.93	1.32	0.22	16.76	2.45	7.22	7.22	5.50	5.50	605.69	604.49	611.92	611.72	
	BFA8CX	BFA8AX	2.00	n/a	0.012	1.17	24.51	52.86	1.00	0.00	4.02	0.30	0.37	0.37	2.00	2.00	605.69	605.16	611.37	611.37	
	BFA14X	BFA12X	2.00	n/a	0.012	4.09	47.33	45.99	3.73	0.03	9.22	0.40	1.30	1.30	2.00	2.00	609.27	607.55	611.94	611.92	
	BFA15	BFA12X	5.50	n/a	0.012	170.12	417.97	259.31	1.32	0.22	16.71	2.44	10.17	15.71	3.65	2.56	609.12	605.69	612.76	608.25	
	BFA16	BFA15	2.00	n/a	0.012	14.30	24.51	22.91	1.00	0.34	8.08	1.10	5.13	4.65	1.66	1.89	611.10	610.87	612.76	612.76	
	BFA17	BFA15	5.50	n/a	0.012	163.52	417.97	816.90	1.32	0.20	16.51	2.39	9.94	16.47	3.60	2.39	619.90	609.12	623.50	611.51	
	BFA13	BFA16	2.00	n/a	0.012	1.52	24.51	34.40	1.00	0.00	4.35	0.34	0.70	0.55	1.31	1.66	611.44	611.10	612.76	612.76	
	BFA18	BFA17	2.00	n/a	0.012	0.64	27.84	75.73	1.29	0.00	3.66	0.21	0.36	0.20	1.11	2.00	622.39	621.41	623.49	623.50	
	BFA20	BFA17	5.50	n/a	0.012	163.18	592.21	81.63	2.65	0.20	21.28	1.97	9.86	16.36	3.61	2.40	622.06	619.90	625.68	622.30	
	BFA19	BFA18	2.00	n/a	0.012	0.35	18.98	62.77	0.60	0.00	2.35	0.19	0.22	0.20	1.00	1.11	622.76	622.39	623.76	623.49	
	BFA21	BFA20	4.00	6.00	0.020	163.18	1831.55	99.45	2.65	0.66	11.08	1.31	6.27	10.85	1.91	1.33	624.68	622.04	626.59	623.37	6' BOTT CONC DITCH
	BFA22	BFA21	3.50	n/a	0.012	33.01	77.07	93.62	0.50	0.09	7.76	1.59	6.68	7.65	1.79	1.61	625.15	624.68	626.94	626.29	
	BFA21B	BFA21	4.00	6.00	0.020	141.22	1522.99	190.47	1.83	0.49	9.32	1.34	6.08	9.30	1.77	1.34	628.17	624.68	629.94	626.02	6' BOTT CONC DITCH
	BFB30X	BFA22	3.50	n/a	0.012	33.01	108.99	52.58	1.00	0.09	9.92	1.32	6.64	9.00	1.80	1.42	633.46	632.93	635.25	634.35	
	BFA21C	BFA21B	2.50	6.00	0.035	38.53	205.31	496.06	0.85	0.43	3.29	1.12	3.29	1.66	1.12	1.77	632.38	628.17	633.50	629.94	6' FLAT BOTT DITCH
	BFA24A	BFA21B	4.00	6.00	0.020	131.70	847.20	112.61	0.83	0.43	7.25	1.66	6.30	7.22	1.82	1.66	629.10	628.17	630.92	629.83	6' BOTT CONC DITCH
	BFA31X	BFB30X	2.00	n/a	0.012	5.29	24.51	25.85	1.00	0.05	6.22	0.63	2.82	5.87	1.15	0.66	635.21	634.96	636.37	635.61	
	BFA33	BFB30X	3.50	n/a	0.012	24.42	108.99	39.02	1.00	0.05	9.13	1.13	3.86	8.18	2.19	1.22	633.85	633.46	636.03	634.68	
	BFA33X	BFB30X	2.00	n/a	0.012	5.15	24.51	95.68	1.00	0.04	6.16	0.62	2.80	6.15	1.13	0.62	635.91	634.96	637.05	635.58	
	BFA21D	BFA21C	2.50	6.00	0.035	34.82	205.43	350.40	0.85	0.35	3.19	1.06	3.19	2.68	1.06	1.20	635.28	632.30	636.34	633.50	6' FLAT BOTT DITCH
	BFA25	BFA24A	2.50	(2-30")	0.012	47.47	111.18	121.39	1.57	0.79	10.87	1.14	6.72	10.52	1.69	1.17	631.00	629.10	632.69	630.27	
	BFA24B	BFA24A	4.00	6.00	0.035	89.13	936.81	390.92	2.12	0.60	5.77	1.35	5.51	5.77	1.40	1.35	637.40	629.10	638.80	630.45	6' FLAT BOTT DITCH
	BFA21E	BFA21D	2.50	6.00	0.035	31.69	253.38	288.00	1.29	0.29	3.62	0.91	3.62	2.90	0.91	1.06	639.00	635.28	639.91	636.34	6' FLAT BOTT DITCH
	BFA26	BFA25	4.00	6.00	0.012	42.03	1071.19	110.32	0.33	0.02	5.18	0.86	4.60	5.15	0.94	0.86	636.36	636.00	637.30	636.86	
	BFA24C	BFA24B	4.00	6.00	0.020	85.32	1507.26	368.15	1.79	0.18	8.04	1.04	4.68	8.04	1.51	1.04	644.01	637.40	645.52	638.44	6' BOTT CONC DITCH
	BFA22B	BFA21E	2.50	n/a	0.012	28.06	44.44	62.26	1.00	0.40	9.59	1.44	7.39	9.12	1.81	1.50	639.62	639.00	641.43	640.50	
	BFA27	BFA26	3.50	6.00	0.020	40.74	945.50	415.44	1.30	0.06	5.80	0.77	4.62	5.80	0.91	0.77	641.78	636.36	642.69	637.13	6' BOTT CONC DITCH
	BFA29X	BFA26	1.50	n/a	0.012	1.56	12.47	63.93	1.20	0.02	4.81	0.36	1.77	4.80	0.75	0.36	638.80	638.03	639.55	638.39	
	BFA24X	BFA24C	4.00	6.00	0.020	83.32	1316.15	320.08	1.37	0.17	7.23	1.11	4.80	7.23	1.46	1.11	648.39	644.01	649.85	645.11	6' BOTT CONC DITCH
	BFA22A	BFA22B	2.50	n/a	0.012	28.06	54.48	226.19	1.50	0.40	11.16	1.27	7.39	11.09	1.81	1.28	643.10	639.70	644.91	640.98	
	BFA28X	BFA27	3.50	n/a	0.012	40.74	113.19	140.95	1.08	0.14	10.82	1.45	4.65	10.42	3.00	1.49	643.30	641.78	646.30	643.27	
	BFA34X	BFA24X	4.00	n/a	0.012	75.81	145.98	79.44	0.88	0.24	11.78	2.04	8.63	10.84	2.64	2.18	649.09	648.39	651.72	650.56	
	BFA22D	BFA22A	2.50	n/a	0.012	28.06	62.84	60.66	2.00	0.40	12.43	1.17	7.39	11.06	1.81	1.28	644.31	643.10	646.12	644.38	
	BFA37X	BFA34X	1.50	n/a	0.012	7.58	53.64	44.85	22.22	0.44	21.46	0.38	4.41	20.01	1.40	0.40	661.55	651.59	662.95	651.99	
	BFA35X	BFA34X	4.00	n/a	0.012	70.52	145.98	271.07	0.88	0.21	11.48	1.97	5.63	11.38	3.94	1.98	651.40	649.01	655.34	650.99	
	BFA40X	BFA22D	2.00	6.00	0.035	17.55	245.46	342.30	4.15	0.17	4.74	0.50	2.14	4.74	0.93	0.50	658.50	644.31	659.43	644.81	6' FLAT BOTT DITCH
	BFA23A	BFA22D	2.00	6.00	0.035	16.48	183.33	163.69	1.78	0.15	3.34	0.59	3.34	0.69	0.59	1.81	647.22	644.31	647.81	646.12	6' FLAT BOTT DITCH
	BFA36	BFA37X	1.50	n/a	0.012	1.65	11.38	34.30	1.00	0.02	4.60	0.39	1.87	4.55	0.75	0.39	665.64	665.30	666.39	665.69	
	BFA38X	BFA37X	1.50	n/a	0.012	3.76	21.14	108.66	3.45	0.11	9.04	0.43	3.50	9.01	0.88	0.43	665.30	661.55	666.18	661.98	
	BFA41	BFA40X	1.50	n/a	0.012	5.61	11.94	148.46	1.10	0.24	6.66	0.72	3.27	6.65	1.40	0.72	660.13	658.50	661.53	659.22	
	BFA42	BFA40X	1.50	n/a	0.012	7.75	10.44	154.33	0.84	0.46	6.47	0.96	5.60	6.47	1.10	0.96	659.80	658.50	660.90	659.46	
	BFA23B	BFA23A	2.00	6.00	0.035	15.78	172.37	640.96	1.57	0.14	3.16	0.60	3.16	3.20	0.60	0.59	657.28	647.22	657.88	647.81	6' FLAT BOTT DITCH
	BFA39	BFA38X	1.50	n/a	0.012	1.65	11.38	34.45	1.00	0.02	4.58	0.39	1.87	4.54	0.75	0.39	665.64	665.30	666.39	665.69	
	BFA43	BFA42	1.50	n/a	0.012	3.32	11.94	132.32	1.10	0.09	5.76	0.54	2.62	5.76	1.01	0.54	661.26	659.80	662.27	660.34	
	BFA23C	BFA23B	2.00	6.00	0.035	4.71	100.22	301.46	0.53	0.01	1.48	0.41	1.48	0.94	0.41	0.60	658.88	657.28	659.29	657.88	6' FLAT BOTT DITCH
BFC	BFC2	BFC OUT	3.00	n/a	0.012	25.59	45.70	148.55	0.40	0.13	6.64	1.61	3.62	3.62	3.00	3.00	605.82	605.22	610.82	610.63	
	BFC4	BFC2	2.00	n/a	0.012	1.49	24.51	27.52	1.00	0.00	4.31	0.33	0.95	4.25	1.00	0.34	614.78	614.51	615.78	614.84	
	BFC6	BFC2	3.00	n/a	0.012	24.97	45.70	217.34	0.40	0.12	6.60	1.58	3.53	3.53	3.00	3.00	606.69	605.82	611.08	610.82	
	BFC8	BFC6	2.00	n/a	0.012	0.84	24.51	32.01	1.00	0.00	3.63	0.25	0.54	3.61	1.00	0.25	611.13	610.81	612.13	611.06	
	BFC10	BFC6	2.00	n/a	0.012	4.98	15.50	226.06	0.40	0.04	4.41	0.78	1.59	1.59	2.00	2.00	608.59	607.69	611.18	611.08	
	BFC7	BFC6	3.00	n/a	0.012	21.16	72.26	65.67	1.00	0.09	8.89	1.11	5.93	8.40	1.51	1.16	610.47	609.81	611.98	610.97	
	BFC10A	BFC10	1.50	n/a	0.012	1.26	11.38	21.39	1.00	0.01	4.23	0.34	0.71	0.71	1.50	1.50	609.31	609.09	611.18	611.18	
	BFC5	BFC7	1.50	n/a	0.012	4.64	9.19	117.13	0.65	0.17	5.23	0.75	4.51	5.21	0.85	0.75	615.43	614.66	616.27	615.42	
	BFC9	BFC7	2.50	n/a	0.012	16.87	31.42	145.95	0.50	0.14	6.53	1.30	5.94	6.52	1.40	1.30	611.76	611.03	613.16	612.33	
	BFC3	BFC5	1.50	n/a	0.012	3.43	11.38	97.02	1.00	0.09	5.62	0.57	3.97	5.62	0.74	0.57	616.40	615.43	617.13	615.99	
	BFC11	BFC9	2.50	n/a	0.012	16.34	34.42	24.72	0.60	0.14	6.94	1.21	5.85	6.71	1.39	1.24	611.91	611.76	613.29	613.00	
	BFC1	BFC3	1.50	n/a	0.012	1.92	11.38	97.08	1.00	0.03	4.77	0.42	2.17	4.77	0.75	0.42	617.82	616.85	618.57	617.27	
	BFC13	BFC11	2.00	n/a	0.012	14.53	10.96	116.37	0.20	0.35	4.74	2.00	4.87	6.32	1.81	1.37	612.64	612.41	614.44	613.78	
	BFC12	BFC13	1.50	n/a	0.012	0.53	8.93	25.35	0.62	0.00	2.79	0.25	0.60	2.77	0.75	0.25	614.66	614.50	615.41	614.75	
	BFC15	BFC13	2.00	n/a	0.012	13.50	10.96	155.83	0.20	0.30	4.41	2.00	4.34	4.52	1.94	1.81	612.95	612.64	614.89	614.44	
	BFC14	BFC15	1.50	n/a	0.012	0.92	8.81	25.33	0.60	0.01	3.22	0.33	1.04	3.22	0.75	0.33	615.65	615.50	616.40	615.83	
	BFC19A	BFC15	2.00	n/a	0.012	13.09	10.96	123.33	0.20	0.29	4.27	2.00	4.17	4.21	2.00	1.94	613.20	612.95	615.23	614.89	
	BFC18	BFC19A	1.50	n/a	0.012	1.77	8.81	22.50	0.60	0.02	3.88	0.46	1.03	1.00	1.40	1.50	613.83	613.70	615.23	615.23	

STATE OF TEXAS
B. VANDERWALT
81580
LICENSED
PROFESSIONAL ENGINEER

Brandon Vanderwalt P.E.
7/11/2012

I. S. ENGINEERS, LLC
TBPE REG. # F-11657

Texas Department of Transportation
© 2012

IH 35W FROM NORTH TARRANT PKWY TO IH 820

DRAINAGE COMPUTATIONS

CONVEYANCE COMPUTATIONS

SHEET 11 OF 19

DESIGN	FED.RD. DIV.NO.	FEDERAL AID PROJECT NO.		HIGHWAY NO.
BV	6	(SEE TITLE SHEET)		IH 35W
GRAPHICS	STATE	DISTRICT	COUNTY	SHEET NO.
ZS	TEXAS	FTW	TARRANT	1196
CHECK	CONTROL	SECTION	JOB	
SY	0014	16	255, ETC.	
CHECK				
MNM				

FILENAME: S3BDRCOMP06.dgn

DRAWING DATE: 7/11/2012

CONVEYANCE COMPUTATIONS, CSJ: 0014-16-255

SYSTEM	UPSTREAM NODE	DOWNSTREAM NODE	RISE	SPAN	N-VALUE	DISCHARGE	CAPACITY	ACTUAL LENGTH	ACTUAL SLOPE	FULL FLOW SLOPE	UNIFORM VELOCITY	UNIFORM DEPTH	ACTUAL VELOCITY UPSTREAM	ACTUAL VELOCITY DOWNSTREAM	ACTUAL DEPTH UPSTREAM	ACTUAL DEPTH DOWNSTREAM	INVERT UPSTREAM	INVERT DOWNSTREAM	UPSTREAM HGL	DOWNSTREAM HGL	COMMENT
BFC (CONT.)	BFC20	BFC19A	2.00	n/a	0.012	11.09	28.71	373.00	1.37	0.20	8.56	0.86	5.51	8.55	1.22	0.86	618.32	613.20	619.54	614.06	
	BFC21	BFC20	2.00	n/a	0.012	10.66	28.53	298.00	1.36	0.19	8.42	0.85	5.43	8.42	1.20	0.85	622.36	618.32	623.55	619.17	
	BFC22	BFC21	2.00	n/a	0.012	10.26	22.59	248.00	0.85	0.18	7.01	0.95	5.41	7.01	1.16	0.95	624.46	622.36	625.63	623.30	
	BFC23	BFC22	1.50	n/a	0.012	7.05	10.49	298.04	0.85	0.38	6.35	0.90	5.36	6.35	1.05	0.90	627.50	624.97	628.55	625.87	
	BFC24	BFC23	1.50	n/a	0.012	8.80	10.50	298.04	0.85	0.60	6.62	1.06	5.98	6.62	1.17	1.06	630.04	627.50	631.21	628.56	
	BFC24A	BFC24	1.50	n/a	0.012	7.65	10.65	298.00	0.88	0.45	6.56	0.94	5.57	6.56	1.09	0.94	632.65	630.04	633.74	630.98	
	BFC25A	BFC24A	1.50	n/a	0.012	6.48	10.49	248.01	0.85	0.32	6.25	0.85	5.17	6.25	1.00	0.85	634.76	632.65	635.76	633.50	
	BFC26	BFC25A	1.50	n/a	0.012	5.38	11.94	298.03	1.10	0.22	6.58	0.71	4.76	6.58	0.92	0.71	638.04	634.76	638.96	635.47	
	BFC27	BFC26	1.50	n/a	0.012	4.50	14.14	298.91	1.54	0.16	7.12	0.58	4.38	7.12	0.85	0.58	642.66	638.04	643.50	638.62	
	BFC28	BFC27	1.50	n/a	0.012	4.03	14.28	299.08	1.57	0.13	6.95	0.54	4.20	6.94	0.80	0.55	647.37	642.66	648.17	643.20	
	BFC29	BFC28	1.50	n/a	0.012	2.57	14.28	299.05	1.57	0.05	6.13	0.43	3.58	6.13	0.64	0.43	652.07	647.37	652.71	647.80	
	BFC30	BFC29	1.50	n/a	0.012	1.19	14.02	299.03	1.52	0.01	4.85	0.30	1.35	4.85	0.75	0.30	656.61	652.07	657.36	652.37	
BFD	BFD35	BFD OUT	4.50	n/a	0.012	116.89	150.64	225.00	0.50	0.30	10.50	2.97	7.35	7.35	4.50	4.50	604.73	603.61	611.21	610.53	
	BFD6	BFD35	2.00	n/a	0.012	0.41	24.51	34.48	1.00	0.00	2.93	0.18	0.26	2.93	1.00	0.18	614.35	614.00	615.35	614.18	
	BFD36	BFD35	4.50	n/a	0.012	117.04	150.64	198.56	0.50	0.30	10.51	2.97	7.36	7.36	4.50	4.50	605.73	604.73	611.82	611.21	
	BFD37	BFD36	4.50	n/a	0.012	117.03	150.64	173.50	0.50	0.30	10.51	2.97	7.36	7.36	4.50	4.50	606.59	605.73	612.35	611.82	
	BFD32	BFD37	4.50	n/a	0.012	113.38	150.64	104.89	0.50	0.28	10.45	2.90	7.13	7.13	4.50	4.50	607.12	606.59	612.65	612.35	
	BFD34	BFD32	2.00	n/a	0.012	0.61	25.70	23.98	1.10	0.00	3.42	0.21	0.19	0.19	2.00	2.00	609.88	609.62	612.65	612.65	
	BFD38	BFD32	4.50	n/a	0.012	113.22	150.64	65.94	0.50	0.28	10.43	2.90	7.12	7.12	4.50	4.50	607.45	607.12	612.84	612.65	
	BFD12	BFD38	4.00	n/a	0.012	80.95	110.04	182.84	0.50	0.27	9.56	2.55	6.44	6.44	4.00	4.00	608.86	607.95	613.35	612.84	
	BFD39	BFD38	3.00	n/a	0.012	40.32	55.97	62.33	0.60	0.31	8.58	1.89	5.70	5.70	3.00	3.00	609.96	609.59	613.05	612.84	
	BFD41	BFD12	3.50	n/a	0.012	75.56	77.07	180.52	0.50	0.48	9.09	2.82	7.85	7.85	3.50	3.50	610.26	609.36	614.24	613.35	
	BFD13	BFD39	3.00	n/a	0.012	34.83	55.97	27.00	0.60	0.23	8.33	1.72	4.93	4.93	2.99	3.00	610.12	609.96	613.12	613.05	
	BFD7	BFD41	3.50	n/a	0.012	73.84	84.43	279.10	0.60	0.46	9.87	2.54	7.67	7.67	3.50	3.50	611.94	610.26	615.53	614.24	
	BFD4	BFD13	2.50	n/a	0.012	12.15	34.09	177.38	0.59	0.07	6.40	1.03	2.99	2.48	1.93	2.50	611.27	610.23	613.20	613.12	
	BFD14	BFD13	2.50	n/a	0.012	24.68	39.03	298.00	0.77	0.31	8.43	1.44	6.91	8.40	1.71	1.44	612.53	610.23	614.24	611.67	
	BFD27	BFD7	2.00	n/a	0.012	0.74	30.02	35.09	1.50	0.00	4.03	0.22	0.47	4.01	1.00	0.22	615.53	615.00	616.53	615.22	
	BFD29	BFD7	2.00	6.00	0.035	73.13	171.19	271.94	1.00	3.02	3.80	1.36	3.73	4.91	1.38	1.15	620.12	617.40	621.50	618.55	6' FLAT BOTT DITCH
	BFD11	BFD4	2.00	n/a	0.012	6.91	24.47	117.95	1.00	0.08	6.71	0.73	4.64	6.68	0.96	0.73	612.95	611.77	613.91	612.50	
	BFD26	BFD14	2.50	n/a	0.012	23.84	44.44	198.00	1.00	0.29	9.23	1.30	6.78	9.16	1.68	1.31	614.51	612.53	616.19	613.84	
	BFD30	BFD29	2.00	6.00	0.035	71.93	171.19	167.30	1.00	2.93	3.81	1.34	3.81	3.65	1.34	1.38	621.79	620.12	623.13	621.50	6' FLAT BOTT DITCH
	BFD10	BFD11	1.50	n/a	0.012	0.69	11.38	24.83	1.00	0.00	3.55	0.25	0.78	3.54	0.75	0.25	613.70	613.45	614.45	613.70	
	BFD3	BFD11	2.00	n/a	0.012	6.22	24.50	147.33	1.00	0.06	6.53	0.69	4.48	6.50	0.91	0.69	614.43	612.95	615.34	613.64	
	BFD15	BFD26	2.50	n/a	0.012	22.88	48.68	198.00	1.20	0.26	9.77	1.21	6.65	9.70	1.65	1.21	616.88	614.51	618.54	615.72	
	BFD33	BFD30	2.00	6.00	0.035	70.61	171.19	301.85	1.00	2.82	3.77	1.34	3.77	3.75	1.34	1.34	624.81	621.79	626.15	623.13	6' FLAT BOTT DITCH
	BFD5	BFD3	1.50	n/a	0.012	0.65	11.38	25.50	1.00	0.00	3.50	0.24	0.74	3.47	0.75	0.24	615.18	614.93	615.93	615.17	
	BFD9	BFD3	1.50	n/a	0.012	4.50	11.38	141.17	1.00	0.16	6.07	0.65	4.41	6.05	0.84	0.66	616.34	614.93	617.18	615.58	
	BFD16	BFD15	2.50	n/a	0.012	19.68	48.68	198.00	1.20	0.20	9.41	1.10	6.25	9.33	1.53	1.11	619.26	616.88	620.79	618.00	
	BFD15A	BFD15	1.50	n/a	0.012	2.67	8.81	23.10	0.60	0.06	4.38	0.57	2.47	4.35	0.88	0.57	618.35	618.22	619.24	618.78	
	BFD40	BFD33	2.00	6.00	0.035	57.41	172.54	1051.50	1.02	1.86	3.61	1.20	3.61	3.07	1.20	1.34	635.49	624.81	636.70	626.15	6' FLAT BOTT DITCH
	BFD31	BFD33	2.00	n/a	0.012	1.89	17.33	50.47	0.50	0.01	3.60	0.45	1.09	0.85	1.08	1.34	625.06	624.81	626.15	626.15	
	BFD2	BFD9	1.50	n/a	0.012	2.30	11.38	82.82	1.00	0.04	5.05	0.46	3.43	5.04	0.61	0.46	617.17	616.34	617.77	616.80	
	BFD8	BFD9	1.50	n/a	0.012	2.20	11.38	28.00	1.00	0.04	4.98	0.45	2.36	4.88	0.78	0.45	616.62	616.34	617.40	616.79	
	BFD28	BFD16	2.50	n/a	0.012	18.48	48.68	248.00	1.20	0.17	9.24	1.07	6.10	9.22	1.48	1.07	622.24	619.26	623.72	620.33	
	BFD44	BFD40	2.00	6.00	0.035	57.41	189.21	287.12	1.22	1.86	3.86	1.15	3.76	3.61	1.17	1.20	639.00	635.49	640.17	636.70	6' FLAT BOTT DITCH
	BFD1	BFD2	1.50	n/a	0.012	2.30	11.38	24.66	1.00	0.04	5.05	0.46	2.38	4.92	0.80	0.47	617.41	617.17	618.22	617.63	
	BFD18A	BFD28	2.50	n/a	0.012	17.31	44.47	296.96	1.00	0.15	8.50	1.08	5.90	8.48	1.44	1.08	625.21	622.24	626.65	623.32	
	BFD49X	BFD44	1.50	n/a	0.012	13.30	32.42	181.80	8.12	1.36	17.44	0.67	7.52	17.35	1.50	0.67	661.26	646.50	662.88	647.17	
	BFD45	BFD44	2.50	n/a	0.012	24.24	54.26	123.42	1.49	0.30	10.77	1.17	6.81	10.41	1.70	1.20	640.84	639.00	642.54	640.20	
	BFD18	BFD18A	2.50	n/a	0.012	13.88	44.56	296.96	1.01	0.10	8.02	0.96	5.44	8.01	1.29	0.96	628.20	625.21	629.49	626.17	
	BFD17	BFD18A	1.50	n/a	0.012	1.90	11.38	13.50	1.00	0.03	4.78	0.42	2.01	1.63	0.79	0.94	625.84	625.71	626.64	626.65	
	BFD48	BFD49X	1.50	n/a	0.012	2.12	11.38	30.52	1.00	0.03	4.93	0.44	1.29	1.20	1.32	1.50	661.56	661.26	662.88	662.88	
	BFD50X	BFD49X	1.50	n/a	0.012	8.63	10.80	63.90	0.90	0.57	6.80	1.01	5.14	4.88	1.36	1.50	661.83	661.26	663.19	662.88	
	BFD46	BFD45	2.50	n/a	0.012	24.24	56.19	198.24	1.60	0.30	11.05	1.15	6.92	10.90	1.68	1.16	644.01	640.84	645.69	642.00	
	BFD19	BFD18	2.50	n/a	0.012	12.69	40.97	298.00	0.85	0.08	7.38	0.95	5.37	7.36	1.21	0.96	630.73	628.20	631.94	629.15	
	BFD57X	BFD50X	1.50	n/a	0.012	3.87	10.80	135.11	0.90	0.12	5.59	0.62	2.76	5.59	1.11	0.62	663.05	661.83	664.16	662.46	
	BFD55X	BFD50X	1.50	n/a	0.012	4.89	24.09	63.10	4.48	0.18	10.69	0.46	4.20	10.38	0.94	0.47	664.66	661.83	665.60	662.30	
	BFD47	BFD46	2.50	n/a	0.012	24.24	70.53	63.91	2.52	0.30	13.04	1.01	6.92	11.55	1.68	1.11	645.62	644.01	647.30	645.12	
	BFD20	BFD19	2.50	n/a	0.012	11.53	40.97	298.00	0.85	0.07	7.16	0.91	5.20	7.16	1.15	0.91	633.26	630.73	634.42	631.64	
	BFD56	BFD55X	1.50	n/a	0.012	2.20	11.38	30.74	1.00	0.04	4.98	0.45	2.36	4.90	0.78	0.45	664.97	664.66	665.75	665.11	
	BFD60	BFD47	2.00	6	0.035	23.10	194.11	506.80	1.99	0.30	3.85	0.69	3.85	1.08	0.69	1.68	655.71	645.62	656.40	647.30	6' FLAT BOTT DITCH
	BFD21	BFD20	2.00	n/a	0.012	8.99	30.71	298.00	1.57	0.13	8.50	0.74	5.07	8.49	1.10	0.74	638.44	633.76	639.54	634.50	
	BFD20A	BFD20	1.50	n/a	0.012	1.57	11.38	11.00	1.00	0.02	4.52	0.38	1.78	4.30	0.75	0.39	633.87	633.76	634.62	634.15	
	BFD61	BFD60	2.00	6	0.035	10.39	84.60	381.83	0.38	0.06	1.68	0.70	1.68	1.72	0.70	0.69	657.15	655.71	657.85	656.40	6' FLAT BOTT DITCH
	BFD22A	BFD21	2.00	n/a	0.012	7.77	30.71	154.45	1.57	0.10	8.15	0.69	4.67	8.13	1.05	0.69	640.87	638.44	641.91	639.13	
	BFD22	BFD22A	2.00	n/a	0.012	6.51	30.71	138.57	1.57	0.07	7.76	0.63	4.37	7.73	0.96	0.63	643.10	640.92	644.06	641.55	
	BFD23	BFD22	1.50	n/a	0.012	5.27	14.26	297.02	1.57	0.21	7.46	0.63	4.66	7.46	0.92	0.63	647.76	643.10	648.68	643.73	
	BFD24	BFD23	1.50	n/a	0.012	3.84	14.26	297.02	1.57	0.11	6.86	0.53	4.13	6.86	0.78	0.53	652.42	647.76	653.20	648.29	
	BFD25	BFD24	1.50	n/a	0.012	1.06	14.26	297.02	1.57	0.01	4.74	0.28	1.20	4.74	0.75	0.28	657.09	652.42	657.84	652.70	
	BFD24A	BFD24	1.50	n/a	0.012	1.49	8.05	10.00	0.50	0.02	3.50	0.43	1.68	1.60	0.75	0.78	652.47	652.42	653.22	653.20	
BFE	BFE3X	BFE OUT	5.00	n/a	0.012	79.25	295.92	454.21	1.10	0.08	12.75	1.77	7.88	12.70	2.55	1.77	600.80	595.80	603.34	597.57	
	BFE4X	BFE3X	5.00	n/a	0.012	75.54	295.92	259.44	1.10	0.07	12.59	1.72	7.64	12.31	2.51	1.75	603.65	600.80	606.16	602.55	
	BFE5X	BFE4X	1.50	n/a	0.012	7.00	35.41	63.80	9.68	0.38	15.59	0.45	4.06	15.02	1.41	0.46	613.33	607.15	614.74	607.61	
	BFE11X	BFE4X	5.00	n/a	0.012	59.69	295.92	233.87	1.10	0.04	11.81	1.52	7.05	11.54	2.23	1.55	606.22	603.65	608.45	605.20	
	BFE6X	BFE5X	1.50	n/a	0.012	4.57	8.05	64.42	0.50	0.16	4.66	0.81	2.58	2.58	1.50	1.50	610.85	610.53	614.85	614.74	
	BFE14X	BFE11X	5.00	n/a	0.012	53.95	295.92	207.27	1.10	0.04	11.43	1.45	6.82	11.17	2.12	1.47	608.50	606.22	610.62	607.70	
	BFE21X	BFE11X	3.50	n/a	0.012	5.12	84.43	130.36	0.60	0.00	4.85	0.58	3.81	4.84	0.69	0.59	608.98	608.20	609.67	608.79	
	BFE10	BFE6X	2.00	n/a	0.012	3.07	17.33	177.74	0.50	0.02	4.13	0.57	0.98	0.98	2.00	2.00	611.74	610.85	614.88	614.85	
	BFE15X	BFE14X	3.00	n/a	0.012	41.27	104.71	340.41	2.10	0.33	13.93	1.31	7.44	13.85	2.20	1.31	617.65	610.50	619.85	611.82	
	BFE23X	BFE14X	3.50	n/a	0.012	3.28	139.58	72.59	1.64	0.00	6.02	0.37	2.98	5.99	0.60	0.37	610.33	609.14	610.93	609.51	

STATE OF TEXAS
B. VANDERWALT
81580
LICENSED
PROFESSIONAL ENGINEER

Brad Vanderwalt P.E.
7/30/2012

I. S. ENGINEERS, LLC
TBPE REG. # F-11657

Texas Department of Transportation
© 2012

IH 35W FROM NORTH TARRANT PKWY TO IH 820

DRAINAGE COMPUTATIONS

CONVEYANCE COMPUTATIONS

SHEET 12 OF 19

DESIGN	FED.RD. DIV.NO.	FEDERAL AID PROJECT NO.		HIGHWAY NO.
BV	6	(SEE TITLE SHEET)		IH 35W
GRAPHICS	STATE	DISTRICT	COUNTY	SHEET NO.
ZS	TEXAS	FTW	TARRANT	1197
CHECK	CONTROL	SECTION	JOB	
SY	0014	16	255, ETC.	
CHECK				
MNM				

FILENAME: S3BDRCOMP07.dgn

DRAWING DATE: 7/29/2012

CONVEYANCE COMPUTATIONS, CSJ: 0014-16-255

SYSTEM	UPSTREAM NODE	DOWNSTREAM NODE	RISE	SPAN	N-VALUE	DISCHARGE	CAPACITY	ACTUAL LENGTH	ACTUAL SLOPE	FULL FLOW SLOPE	UNIFORM VELOCITY	UNIFORM DEPTH	ACTUAL VELOCITY UPSTREAM	ACTUAL VELOCITY DOWNSTREAM	ACTUAL DEPTH UPSTREAM	ACTUAL DEPTH DOWNSTREAM	INVERT UPSTREAM	INVERT DOWNSTREAM	UPSTREAM HGL	DOWNSTREAM HGL	COMMENT
BFE (CONT.)	BFE20X	BFE21X	1.50	n/a	0.012	5.12	19.71	24.29	3.00	0.20	9.37	0.52	3.11	8.23	1.32	0.57	610.73	610.00	612.05	610.57	
	BFE9	BFE10	2.00	n/a	0.012	0.45	17.33	30.97	0.50	0.00	2.35	0.22	0.14	0.14	2.00	2.00	611.89	611.74	614.88	614.88	
	BFE16X	BFE15X	3.00	n/a	0.012	21.63	125.15	625.66	3.00	0.09	13.26	0.84	5.45	13.25	1.65	0.84	636.42	617.65	638.07	618.50	
	BFE17X	BFE16X	2.00	n/a	0.012	12.13	24.51	560.99	1.00	0.24	7.79	0.99	5.60	7.79	1.30	0.99	643.03	637.42	644.33	638.41	
	BFE18X	BFE17X	1.50	n/a	0.012	8.32	10.18	358.08	0.80	0.53	6.40	1.03	4.71	6.40	1.50	1.03	646.40	643.53	648.29	644.57	
01A	01A1	01AOUT	1.50	n/a	0.012	6.28	12.24	7.92	1.00	0.30	6.58	0.80	3.55	3.55	1.50	1.50	655.58	655.50	659.19	659.16	CULVERT 01
01C	01C2	01COUT	1.50	n/a	0.012	15.65	12.24	8.50	1.00	0.02	9.07	1.50	8.84	8.84	1.50	1.50	655.59	655.50	659.21	659.00	CULVERT 01
	01C1	01C2	1.50	n/a	0.012	1.96	12.24	35.93	1.00	0.00	4.48	0.42	1.26	1.11	1.23	1.50	657.98	657.62	659.21	659.21	
01D	01D4	01DOUT	5.00	6.00	0.035	130.18	766.51	1350.02	0.50	0.69	3.76	2.29	3.75	1.22	2.29	4.47	662.00	655.25	664.29	659.72	CULVERT 01
	01D3	01D4	2.50	n/a	0.012	28.74	53.09	303.21	1.23	0.42	10.43	1.37	7.47	10.41	1.83	1.37	665.74	662.00	667.57	663.37	
	01D5	01D4	5.00	6.00	0.035	98.80	1380.26	181.22	1.62	0.40	5.36	1.52	5.36	2.84	1.52	2.29	664.94	662.00	666.46	664.29	6' FLAT BOTT DITCH
	01D6	01D4	1.50	n/a	0.012	11.49	13.15	149.00	1.15	1.02	7.87	1.16	6.50	6.50	1.50	1.50	663.72	662.00	666.39	664.29	
	01D2	01D3	2.00	6.00	0.035	28.74	130.78	500.12	0.90	0.47	3.09	0.95	3.09	1.18	0.95	1.83	670.26	665.74	671.21	667.57	6' FLAT BOTT DITCH
	01D1	01D2	2.00	6.00	0.035	28.74	97.26	700.22	0.50	0.47	2.51	1.10	2.51	3.09	1.10	0.95	673.76	670.26	674.86	671.21	6' FLAT BOTT DITCH
01J	01J7	01JOUT	2.50	6.00	0.035	59.11	329.38	210.06	2.19	1.02	5.21	1.09	2.63	1.48	1.74	2.50	657.03	652.44	658.77	658.66	CULVERT 01
	01J6	01J7	2.50	6.00	0.035	56.70	157.56	506.00	0.50	0.94	3.02	1.54	3.01	2.52	1.55	1.74	659.56	657.03	661.11	658.77	6' FLAT BOTT DITCH
	01J5	01J6	2.50	6.00	0.035	46.91	157.56	364.01	0.50	0.64	2.87	1.41	2.86	2.49	1.41	1.55	661.38	659.56	662.79	661.11	6' FLAT BOTT DITCH
	01J9	01J6	1.50	3.00	0.035	7.46	105.14	13.88	4.00	0.38	3.83	0.42	1.09	0.55	0.99	1.50	660.12	659.56	661.10	661.11	3' FLAT BOTT DITCH
	01J4	01J5	1.50	6.00	0.035	14.25	69.31	230.74	0.85	0.27	2.46	0.67	2.46	0.87	0.67	1.41	663.33	661.38	664.00	662.79	6' FLAT BOTT DITCH
	01J8	01J5	2.50	4.00	0.035	28.59	127.55	41.23	0.46	0.64	2.48	1.27	2.27	2.11	1.35	1.41	661.57	661.38	662.92	662.79	4' FLAT BOTT DITCH
	01J3	01J9	1.50	n/a	0.012	7.46	7.74	55.00	0.40	0.43	4.66	1.28	4.22	5.60	1.50	1.06	660.42	660.20	662.14	661.26	
	01J2	01J8	2.50	n/a	0.012	28.59	39.70	168.65	0.69	0.41	8.32	1.65	7.38	8.30	1.84	1.65	662.74	661.58	664.58	663.23	
	01J1	01J2	2.50	n/a	0.012	27.04	47.80	48.83	1.00	0.37	9.46	1.41	5.51	8.93	2.50	1.48	663.23	662.74	666.13	664.22	
02B	02B10	02BOUT	2.00	n/a	0.012	12.92	16.67	20.34	0.40	0.28	5.47	1.41	4.11	4.11	2.00	2.00	638.90	638.82	642.86	642.80	CULVERT 02
	02B9	02B10	2.00	n/a	0.012	11.59	16.67	100.71	0.40	0.22	5.40	1.29	3.69	3.69	2.00	2.00	639.30	638.90	643.10	642.86	
	02B8	02B9	2.00	n/a	0.012	7.88	16.67	152.19	0.40	0.10	4.94	1.01	2.51	2.51	2.00	2.00	639.91	639.30	643.26	643.10	
	02B11	02B8	2.00	n/a	0.012	7.14	16.67	32.00	0.40	0.08	4.83	0.95	2.27	2.27	2.00	2.00	640.04	639.91	643.29	643.26	
	02B7A	02B11	2.00	n/a	0.012	2.47	26.36	267.80	1.00	0.01	4.99	0.43	3.33	4.99	0.57	0.43	643.86	641.18	644.43	641.61	
	02B7	02B7A	1.50	n/a	0.012	0.55	12.24	46.70	1.00	0.00	3.32	0.23	0.63	3.32	0.75	0.23	644.57	644.10	645.32	644.33	
	02B6A	02B7A	2.00	n/a	0.012	2.00	26.36	98.47	1.00	0.01	4.71	0.39	3.19	4.68	0.51	0.39	644.85	643.86	645.35	644.25	
	02B6	02B6A	1.50	n/a	0.012	0.34	24.48	50.33	4.00	0.00	4.66	0.13	0.38	4.66	0.75	0.13	647.36	645.35	648.11	645.47	
	02B5A	02B6A	2.00	n/a	0.012	1.70	18.93	48.33	0.52	0.00	3.53	0.42	3.12	3.53	0.46	0.42	645.10	644.85	645.55	645.27	
	02B5	02B5A	1.50	n/a	0.012	0.34	24.48	52.00	4.00	0.00	4.68	0.13	0.39	4.68	0.75	0.13	647.68	645.60	648.43	645.72	
	02B4A	02B5A	2.00	n/a	0.012	1.39	18.61	50.00	0.50	0.00	3.29	0.39	3.03	3.29	0.41	0.39	645.34	645.10	645.75	645.48	
	02B4	02B4A	1.50	n/a	0.012	0.38	24.48	52.00	4.00	0.00	4.84	0.14	0.43	4.80	0.75	0.14	647.92	645.84	648.67	645.98	
	02B3A	02B4A	2.00	n/a	0.012	1.04	18.61	50.00	0.50	0.00	3.03	0.33	2.83	3.03	0.35	0.33	645.59	645.34	645.94	645.68	
	02B3	02B3A	1.50	n/a	0.012	0.35	24.48	52.00	4.00	0.00	4.69	0.13	0.39	4.66	0.75	0.13	648.17	646.09	648.92	646.22	
	02B2A	02B3A	2.00	n/a	0.012	0.72	18.61	50.00	0.50	0.00	2.72	0.28	2.50	2.72	0.30	0.28	645.84	645.59	646.14	645.87	
	02B2	02B2A	1.50	n/a	0.012	0.38	24.48	52.00	4.00	0.00	4.84	0.14	0.43	4.84	0.75	0.14	648.42	646.34	649.17	646.48	
	02B1A	02B2A	2.00	n/a	0.012	0.36	18.93	49.33	0.52	0.00	2.24	0.20	2.01	2.24	0.21	0.20	646.10	645.84	646.31	646.04	
	02B1	02B1A	1.50	n/a	0.012	0.36	24.48	50.34	4.00	0.00	4.73	0.13	0.40	4.73	0.75	0.13	648.61	646.60	649.36	646.73	
02C	02C5	02COUT	2.50	n/a	0.012	18.58	67.34	75.42	1.98	0.17	11.13	0.93	3.79	3.79	2.50	2.50	638.50	637.00	642.94	642.80	CULVERT 02
	02C4	02C5	2.50	n/a	0.012	17.04	30.23	136.72	0.40	0.15	5.96	1.41	3.47	3.47	2.50	2.50	639.04	638.50	643.14	642.94	
	02C3	02C4	2.00	n/a	0.012	15.38	16.67	112.99	0.40	0.39	5.57	1.64	4.90	4.90	2.00	2.00	640.00	639.54	643.60	643.14	
	02C1	02C3	1.50	n/a	0.012	2.14	9.76	101.99	0.64	0.04	4.20	0.50	1.21	1.21	1.50	1.50	641.79	641.14	643.64	643.60	
	02C2	02C3	1.50	n/a	0.012	6.37	7.74	33.50	0.40	0.31	4.59	1.10	3.60	3.60	1.50	1.50	640.63	640.50	643.72	643.60	
	02C7	02C3	1.50	n/a	0.012	3.67	7.74	8.01	0.40	0.10	4.09	0.76	2.08	2.08	1.50	1.50	640.95	640.92	643.61	643.60	
02D	02D7	02DOUT	2.00	n/a	0.012	17.27	52.73	21.00	4.00	0.50	14.25	0.82	5.50	5.50	2.00	2.00	640.11	639.50	642.89	642.80	CULVERT 02
	02D6	02D7	2.00	n/a	0.012	14.90	22.23	246.08	0.71	0.37	7.14	1.26	6.23	7.14	1.42	1.26	644.22	642.47	645.64	643.73	
	02D5	02D6	2.00	n/a	0.012	12.45	22.24	295.11	0.71	0.26	6.92	1.11	5.74	6.88	1.30	1.12	646.32	644.22	647.62	645.34	
	02D4	02D5	1.50	n/a	0.012	10.20	10.55	295.06	0.74	0.80	6.28	1.30	6.14	6.58	1.34	1.23	649.01	646.82	650.35	648.05	
	02D3	02D4	1.50	n/a	0.012	7.90	10.69	295.00	0.76	0.48	6.23	1.01	5.55	6.23	1.13	1.01	651.26	649.01	652.39	650.02	
	02D2	02D3	1.50	n/a	0.012	5.50	10.69	295.02	0.76	0.23	5.76	0.80	4.70	5.76	0.94	0.80	653.51	651.26	654.45	652.06	
	02D1	02D2	1.50	n/a	0.012	2.37	10.68	296.19	0.76	0.04	4.60	0.50	2.40	4.60	0.82	0.50	655.76	653.51	656.58	654.01	
02E	02E6	02EOUT	2.00	n/a	0.012	18.88	37.28	34.83	2.00	0.59	11.27	1.05	6.01	6.01	2.00	2.00	638.20	637.50	643.01	642.80	CULVERT 02
	02E5	02E6	2.00	n/a	0.012	18.88	22.84	147.83	0.75	0.59	7.65	1.47	7.08	7.64	1.58	1.47	644.10	642.99	645.68	644.46	
	02E4	02E5	2.00	n/a	0.012	7.57	27.79	446.65	1.11	0.10	7.16	0.74	4.67	7.14	1.02	0.74	649.06	644.10	650.09	644.84	
	02E3	02E4	2.00	n/a	0.012	5.97	22.00	296.67	0.70	0.06	5.64	0.74	4.43	5.64	0.89	0.74	651.13	649.06	652.02	649.80	
	02E2	02E3	2.00	n/a	0.012	4.24	22.00	296.67	0.70	0.03	5.15	0.62	3.96	5.15	0.75	0.62	653.20	651.13	653.94	651.75	
	02E1	02E2	1.50	n/a	0.012	2.32	10.22	296.45	0.70	0.04	4.43	0.51	2.39	4.43	0.81	0.51	655.76	653.70	656.57	654.20	

STATE OF TEXAS
SHAFEE YUSUF
94963
LICENSED
PROFESSIONAL ENGINEER

8/29/12

I. S. ENGINEERS, LLC
TBPE REG. # F-11657

Texas Department of Transportation
© 2012

IH 35W FROM NORTH TARRANT PKWY TO IH 820

DRAINAGE COMPUTATIONS

CONVEYANCE COMPUTATIONS

SHEET 13 OF 19

DESIGN	FED.RD. DIV.NO.	FEDERAL AID PROJECT NO.		HIGHWAY NO.
BV	6	(SEE TITLE SHEET)		IH 35W
GRAPHICS ZS	STATE	DISTRICT	COUNTY	SHEET NO.
CHECK SY	TEXAS	FTW	TARRANT	1198
CHECK MNM	CONTROL	SECTION	JOB	
	0014	16	255, ETC.	

FILENAME: S3BDRCOMP08.dgn

DRAWING DATE: 8/27/2012

CONVEYANCE COMPUTATIONS, CSJ: 0014-16-255

SYSTEM	UPSTREAM NODE	DOWNSTREAM NODE	RISE	SPAN	N-VALUE	DISCHARGE	CAPACITY	ACTUAL LENGTH	ACTUAL SLOPE	FULL FLOW SLOPE	UNIFORM VELOCITY	UNIFORM DEPTH	ACTUAL VELOCITY UPSTREAM	ACTUAL VELOCITY DOWNSTREAM	ACTUAL DEPTH UPSTREAM	ACTUAL DEPTH DOWNSTREAM	INVERT UPSTREAM	INVERT DOWNSTREAM	UPSTREAM HGL	DOWNSTREAM HGL	COMMENT
02J	02J1	02J1OUT	1.50	n/a	0.012	2.87	7.74	141.87	0.40	0.07	3.83	0.66	1.62	1.62	1.50	1.50	635.55	634.98	639.04	638.95	CULVERT 02
02G1	02G24	02GG1OUT	3.00	6.00	0.035	88.09	266.69	1367.62	0.64	1.33	3.69	1.80	3.69	1.63	1.80	3.00	647.61	638.88	649.41	642.80	CULVERT 02
	02G6	02G24	3.00	n/a	0.010	41.86	78.72	78.00	1.03	0.23	10.68	1.63	7.81	10.10	2.13	1.70	647.40	646.60	649.53	648.30	
	02G23	02G24	2.00	6.00	0.035	19.34	165.79	164.55	1.45	0.21	3.26	0.68	3.26	0.81	0.68	1.80	650.00	647.61	650.68	649.41	6' FLAT BOT DITCH
	02G5	02G6	2.50	n/a	0.012	34.35	53.68	134.78	1.26	0.60	10.98	1.52	7.56	10.75	2.18	1.55	649.60	647.90	651.78	649.45	
	02G22	02G23	2.00	n/a	0.012	14.58	17.43	258.55	0.44	0.35	5.78	1.50	4.64	6.33	2.00	1.38	651.13	650.00	653.34	651.38	
	02G4	02G5	2.50	n/a	0.012	27.45	53.65	134.78	1.26	0.38	10.39	1.32	6.60	10.21	1.98	1.34	651.30	649.60	653.27	650.94	
	02G3	02G4	2.00	n/a	0.012	20.60	36.47	134.78	1.91	0.71	11.31	1.13	6.65	11.11	1.91	1.14	654.94	652.36	656.85	653.50	
	02G2	02G3	2.00	n/a	0.012	13.84	36.47	134.78	1.91	0.32	10.23	0.89	5.06	10.12	1.63	0.90	657.52	654.94	659.14	655.83	
	02G1	02G2	1.50	n/a	0.012	7.23	16.92	135.00	1.91	0.40	8.71	0.72	4.09	8.68	1.50	0.72	660.60	658.02	662.28	658.73	
02H	02H7	02HOUT	3.00	n/a	0.012	49.04	54.96	81.55	0.50	0.46	8.17	2.38	6.94	6.94	3.00	3.00	634.38	633.97	638.40	638.02	CULVERT 02
	02H6	02H7	2.50	n/a	0.012	25.66	30.15	275.17	0.40	0.33	6.51	1.87	5.23	5.23	2.50	2.50	635.98	634.88	639.33	638.40	
	02H8	02H7	2.00	n/a	0.012	23.40	26.36	100.81	1.00	0.91	8.85	1.57	8.15	8.85	1.72	1.57	638.62	637.61	640.34	639.18	
	02H5	02H6	2.50	n/a	0.012	20.59	30.23	104.36	0.40	0.21	6.31	1.58	4.19	4.19	2.50	2.50	636.39	635.98	639.58	639.33	
	02H13	02H8	2.50	10.00	0.035	23.27	206.17	430.23	0.49	0.05	2.20	0.80	2.20	0.80	0.80	1.72	640.73	638.62	641.53	640.34	10' FLAT BOT DITCH
	02H14	02H8	2.50	6.00	0.035	2.29	233.89	230.54	1.10	0.00	1.50	0.22	1.50	0.10	0.22	1.72	641.16	638.62	641.38	640.34	6' FLAT BOT DITCH
	02H4	02H5	2.00	n/a	0.012	17.28	30.38	284.55	1.33	0.50	9.45	1.13	6.30	9.43	1.63	1.13	640.68	636.90	642.31	638.03	
	02H12	02H13	1.50	6.00	0.035	18.52	86.56	317.87	1.32	0.46	3.13	0.68	3.13	2.51	0.68	0.80	644.92	640.73	645.60	641.53	6' FLAT BOT DITCH
	02H3	02H4	1.50	n/a	0.012	13.11	14.14	289.54	1.33	1.33	8.48	1.23	7.43	8.48	1.49	1.23	645.04	641.18	646.53	642.41	
	02H11	02H12	1.00	6.00	0.035	14.52	38.60	234.03	1.32	1.01	2.90	0.60	2.90	2.45	0.60	0.68	648.02	644.92	648.62	645.60	6' FLAT BOT DITCH
	02H2	02H3	1.50	n/a	0.012	7.84	15.17	289.79	1.54	0.47	8.21	0.80	5.02	8.19	1.24	0.80	649.50	645.04	650.73	645.84	
	02H10	02H11	1.00	6.00	0.035	8.91	38.87	246.39	1.34	0.38	2.50	0.46	2.50	1.78	0.46	0.60	651.33	648.02	651.79	648.62	6' FLAT BOT DITCH
	02H1	02H2	1.50	n/a	0.012	3.89	21.06	287.91	2.96	0.12	8.63	0.45	2.76	8.63	1.11	0.45	658.02	649.50	659.13	649.95	
	02H9	02H10	1.00	6.00	0.035	3.54	47.28	318.41	1.99	0.06	2.11	0.24	2.11	1.00	0.24	0.46	657.66	651.33	657.90	651.79	6' FLAT BOT DITCH
02A	02A13	02AAOUT	3.00	6.00	0.035	169.47	271.43	517.01	0.50	4.92	3.82	2.44	2.69	2.69	3.00	3.00	637.40	634.82	641.20	640.19	CULVERT 02
	02A12	02A13	3.00	6.00	0.035	165.17	271.57	500.00	0.50	4.67	3.79	2.41	3.64	2.62	2.47	3.00	639.90	637.40	642.37	641.20	6' FLAT BOT DITCH
	02A11	02A12	3.00	6.00	0.035	164.22	271.56	420.03	0.50	4.62	3.76	2.41	3.76	3.62	2.41	2.47	642.00	639.90	644.41	642.37	6' FLAT BOT DITCH
	02A1	02A11	3.00	4.00	0.012	147.66	209.57	184.66	0.40	1.21	8.12	2.27	8.12	7.65	2.27	2.41	642.74	642.00	645.01	644.41	2-4' X3' BOX
	02A10	02A11	1.50	6.00	0.035	15.79	112.99	330.00	1.85	0.34	3.23	0.56	3.23	0.78	0.56	1.50	648.10	642.00	648.66	644.41	6' FLAT BOT DITCH
	02A2	02A1	3.00	4.00	0.012	134.20	209.57	180.65	0.40	1.00	8.03	2.09	7.98	7.38	2.10	2.27	643.46	642.74	645.56	645.01	2-4' X3' BOX
	02A8	02A1	1.50	6.00	0.035	18.83	67.92	71.16	0.81	0.48	2.65	0.78	2.58	3.84	0.80	0.59	647.97	647.39	648.76	647.98	6' FLAT BOT DITCH
	02A23	02A10	1.50	6.00	0.035	8.88	47.75	451.21	0.50	0.11	1.86	0.61	1.86	2.08	0.61	0.56	650.35	648.10	650.96	648.66	6' FLAT BOT DITCH
	02A3	02A2	3.00	4.00	0.012	122.62	209.57	154.71	0.40	0.84	7.77	1.97	7.77	7.29	1.97	2.10	644.08	643.46	646.05	645.56	2-4' X3' BOX
	02A7	02A8	1.50	6.00	0.035	18.83	65.29	473.05	0.75	0.48	2.57	0.80	2.57	2.58	0.80	0.80	651.51	647.97	652.31	648.76	6' FLAT BOT DITCH
	02A24	02A23	1.50	4.00	0.035	8.88	71.31	352.06	1.24	0.27	2.53	0.54	2.53	2.16	0.54	0.61	654.73	650.35	655.27	650.96	6' FLAT BOT DITCH
	02A18	02A3	3.00	6.00	0.035	122.31	236.00	300.09	0.50	2.56	3.69	2.23	3.70	4.46	2.22	1.97	645.58	644.08	647.80	646.05	6' FLAT BOT DITCH
	02A22	02A3	1.50	4.00	0.035	6.39	82.67	980.84	1.89	0.14	2.71	0.42	2.71	0.43	0.42	1.50	662.65	644.08	663.07	646.05	6' FLAT BOT DITCH
	02A6	02A7	1.50	6.00	0.035	10.26	65.06	201.43	0.74	0.14	2.14	0.58	2.14	1.40	0.58	0.80	653.01	651.51	653.59	652.31	6' FLAT BOT DITCH
	02A9	02A24	1.50	2.00	0.035	8.88	40.11	200.16	0.57	1.50	1.91	0.79	1.92	3.36	0.78	0.55	655.87	654.73	656.65	655.28	6' FLAT BOT DITCH
	02A17	02A18	3.00	6.00	0.035	121.33	200.00	350.17	0.50	2.52	3.91	2.37	3.91	4.31	2.37	2.22	647.33	645.58	649.70	647.80	8' FLAT BOT DITCH
	02A5	02A6	1.50	6.00	0.035	9.58	65.29	500.09	0.75	0.12	2.09	0.56	2.09	2.00	0.56	0.58	656.76	653.01	657.32	653.59	6' FLAT BOT DITCH
	02A20	02A17	2.00	6.00	0.035	17.94	191.88	702.69	1.95	0.18	3.54	0.60	3.54	0.64	0.60	2.00	661.00	647.33	661.60	649.70	6' FLAT BOT DITCH
	02A27	02A17	3.00	6.00	0.035	106.53	198.42	101.65	0.49	1.94	3.77	2.23	3.64	3.43	2.28	2.37	647.83	647.33	650.11	649.70	10' FLAT BOT DITCH
	02A4	02A5	1.50	6.00	0.035	6.05	65.29	650.01	0.75	0.05	1.82	0.43	1.82	1.32	0.43	0.56	661.64	656.76	662.07	657.32	6' FLAT BOT DITCH
	02A28	02A20	2.00	n/a	0.012	13.62	42.78	101.39	2.63	0.31	11.48	0.81	4.33	11.07	2.00	0.83	662.44	659.77	664.54	660.60	
	02A16	02A27	1.50	6.00	0.035	14.27	83.05	750.94	1.00	0.28	2.52	0.62	2.52	0.70	0.62	1.50	655.33	647.83	655.95	650.11	6' FLAT BOT DITCH
	02A25	02A27	3.00	6.00	0.035	101.50	303.64	480.07	1.15	1.76	5.05	1.78	5.05	3.47	1.78	2.28	653.36	647.83	655.14	650.11	6' FLAT BOT DITCH
	02A15	02A16	1.50	2.00	0.035	8.25	82.04	201.42	2.38	1.30	3.20	0.55	3.20	2.60	0.55	0.62	660.13	655.33	660.68	655.95	6' FLAT BOT DITCH
	02A37	02A25	3.00	4.00	0.012	93.28	128.34	120.32	0.60	0.48	10.05	2.32	9.09	10.02	2.57	2.33	654.08	653.36	656.65	655.69	1-4'X3' BOX
	02A19	02A25	1.50	6.00	0.035	7.27	43.11	364.46	1.27	0.07	2.61	0.46	2.61	0.81	0.46	1.50	658.00	653.36	658.46	655.14	6' FLAT BOT DITCH
	02A26	02A25	1.50	6.00	0.035	1.28	37.81	269.62	0.98	0.00	1.25	0.17	1.25	0.14	0.17	1.50	656.00	653.36	656.17	655.14	6' FLAT BOT DITCH
	02A38	02A37	2.00	6.00	0.035	5.58	134.63	334.97	0.96	0.02	1.92	0.38	1.92	0.20	0.38	2.00	657.29	654.08	657.67	656.65	6' FLAT BOT DITCH
	02A39	02A37	2.50	6.00	0.035	65.46	217.66	250.09	0.95	1.25	3.96	1.42	3.96	1.64	1.42	2.50	656.47	654.08	657.88	656.65	6' FLAT BOT DITCH
	02A30	02A38	1.50	6.00	0.035	3.14	81.98	210.59	1.18	0.01	1.71	0.26	1.71	1.08	0.26	0.38	659.78	657.29	660.04	657.67	6' FLAT BOT DITCH
	02A36	02A39	2.50	6.00	0.035	64.80	260.13	216.57	1.36	1.22	4.51	1.29	4.51	3.92	1.29	1.42	659.42	656.47	660.71	657.88	6' FLAT BOT DITCH
	02A35	02A36	2.50	6.00	0.035	50.30	162.95	102.84	0.53	0.74	2.98	1.44	3.03	3.50	1.42	1.29	659.97	659.42	661.39	660.71	6' FLAT BOT DITCH
	02A34	02A35	2.00	4.00	0.012	48.15	72.43	350.63	0.55	0.41	8.19	1.47	7.29	8.19	1.65	1.47	661.89	659.97	663.55	661.44	1-4'X3' BOX
	02A33	02A34	2.00	4.00	0.035	45.57	77.56	450.01	0.55	3.09	3.08	1.56	3.08	2.82	1.56	1.65	664.37	661.89	665.93	663.55	6' FLAT BOT DITCH
	02A32	02A33	2.00	4.00	0.035	13.78	116.41	300.20	1.24	0.28	2.99	0.71	2.98	0.93	0.71	1.56	668.09	664.37	668.80	665.93	6' FLAT BOT DITCH
	02A31	02A32	2.00	4.00	0.035	9.90	81.87	943.00	0.61	0.15	2.11	0.72	2.12	2.14	0.72	0.71	673.87	668.09	674.59	668.80	2' FLAT BOT DITCH
02F	02F7	02FFOUT	2.50	n/a	0.012	24.12	37.03	40.00	0.60	0.29	7.60	1.54	4.91	4.91	2.50	2.50	641.74	641.50	645.16	645.03	CULVERT 02
	02F6	02F7	2.50	n/a	0.012	21.65	37.86	342.05	0.63	0.24	7.58	1.41	6.39	7.54	1.63	1.42	646.55	644.40	648.18	645.82	
	02F5	02F6	2.50	n/a	0.012	20.71	37.88	341.81	0.63	0.22	7.48	1.38	6.27	7.46	1.59	1.38	648.70	646.55	650.29	647.93	
	02F4	02F5	2.50	n/a	0.012	18.51	37.88	341.81	0.63	0.17	7.29	1.28	6.00	7.26	1.51	1.29	650.84	648.70	652.35	649.99	
	02F3	02F4	2.00	n/a	0.012	17.53	20.93	291.95	0.63	0.51	7.03	1.48	6.68	7.03	1.56	1.48	653.18	651.34	654.74	652.82	
	02F2	02F3	2.00	n/a	0.012	15.72	20.93	291.95	0.63	0.41	6.89	1.36	6.32	6.89	1.48	1.36	655.02	653.18	656.50	654.55	
	02F1	02F2	2.00	n/a	0.012	14.61	20.93	291.95	0.63	0.36	6.82	1.29	6.10	6.82	1.42	1.29	656.86	655.02	658.29	656.31	
	02F10	02F1	2.00	n/a	0.012	13.34	20.92	266.73	0.63	0.30	6.66	1.22	4.25	6.66	2.00	1.22	658.54	656.86	660.61	658.08	

STATE OF TEXAS
SHAFEE YUSUF
94963
LICENSED
PROFESSIONAL ENGINEER
7/11/12

I. S. ENGINEERS, LLC
TBPE REG. # F-11657

Texas Department of Transportation
© 2012

IH 35W FROM NORTH TARRANT PKWY TO IH 820

DRAINAGE COMPUTATIONS

CONVEYANCE COMPUTATIONS

SHEET 14 OF 19

DESIGN	FED.RD. DIV.NO.	FEDERAL AID PROJECT NO.		HIGHWAY NO.
BV	6	(SEE TITLE SHEET)		IH 35W
GRAPHICS	STATE	DISTRICT	COUNTY	SHEET NO.
ZS	TEXAS	FTW	TARRANT	1199
CHECK	CONTROL	SECTION	JOB	
SY	0014	16	255, ETC.	
CHECK				
MNM				

FILENAME: S3BDRCOMP09.dgn

DRAWING DATE: 7/11/2012

CONVEYANCE COMPUTATIONS, CSJ: 0014-16-255

SYSTEM	UPSTREAM NODE	DOWNSTREAM NODE	RISE	SPAN	N-VALUE	DISCHARGE	CAPACITY	ACTUAL LENGTH	ACTUAL SLOPE	FULL FLOW SLOPE	UNIFORM VELOCITY	UNIFORM DEPTH	ACTUAL VELOCITY UPSTREAM	ACTUAL VELOCITY DOWNSTREAM	ACTUAL DEPTH UPSTREAM	ACTUAL DEPTH DOWNSTREAM	INVERT UPSTREAM	INVERT DOWNSTREAM	UPSTREAM HGL	DOWNSTREAM HGL	COMMENT
02G2	02G33	02GGOUT	3.00	10.00	0.035	89.24	278.88	398.27	0.42	0.41	3.10	1.71	1.35	1.35	3.00	3.00	640.46	638.78	644.27	644.10	CULVERT 02
	02G12	02G33	3.00	3.00	0.012	33.87	61.22	76.00	0.31	0.14	6.08	1.86	3.76	3.76	3.00	3.00	640.68	640.45	644.38	644.27	
	02G32	02G33	3.00	8.00	0.035	56.86	283.54	344.68	0.55	0.28	3.08	1.37	1.76	0.95	2.02	3.00	642.36	640.46	644.38	644.27	8' FLAT BOT DITCH
	02G11	02G12	2.00	n/a	0.012	11.37	38.24	9.50	2.10	0.22	10.06	0.78	3.62	3.62	2.00	2.00	641.50	641.30	644.41	644.38	
	02G28	02G12	2.50	n/a	0.012	16.69	30.23	89.36	0.40	0.14	5.93	1.39	3.40	3.40	2.50	2.50	641.54	641.18	644.52	644.38	
	02G17	02G32	3.00	n/a	0.012	30.45	53.29	77.00	0.47	0.18	7.40	1.69	6.42	5.28	1.91	2.28	642.46	642.10	644.37	644.38	
	02G31	02G32	3.00	6.00	0.035	25.95	280.12	387.17	0.70	0.12	2.74	0.96	2.74	0.92	0.96	2.01	645.10	642.37	646.06	644.38	6' FLAT BOT DITCH
	02G10	02G28	2.00	n/a	0.012	9.61	18.54	95.00	0.49	0.15	5.61	1.07	3.06	3.06	2.00	2.00	642.59	642.12	644.67	644.52	
	02G27	02G28	2.00	n/a	0.012	6.59	24.19	9.50	0.84	0.07	6.23	0.74	2.10	2.10	2.00	2.00	642.08	642.00	644.53	644.52	
	02G16	02G17	2.50	n/a	0.012	20.23	35.47	140.00	0.55	0.21	7.08	1.41	6.18	7.05	1.58	1.42	643.74	642.97	645.32	644.39	
	02G19	02G17	2.00	n/a	0.012	9.16	27.05	9.50	1.05	0.14	7.36	0.84	3.37	6.44	1.62	0.93	643.30	643.20	644.92	644.13	
	02G15	02G31	3.00	n/a	0.012	24.46	44.97	90.52	0.33	0.11	6.14	1.65	6.11	6.41	1.66	1.59	644.97	644.67	646.63	646.26	
	02G30	02G10	2.00	n/a	0.012	8.59	17.11	9.50	0.42	0.12	5.19	1.04	2.73	2.73	2.00	2.00	642.63	642.59	644.69	644.67	
	02G18	02G16	2.00	n/a	0.012	8.98	17.11	9.50	0.42	0.13	5.24	1.07	3.34	4.29	1.60	1.26	644.10	644.06	645.70	645.32	
	02G26	02G16	2.00	n/a	0.012	10.39	20.24	140.00	0.59	0.18	6.17	1.06	5.21	6.13	1.21	1.06	645.15	644.32	646.36	645.38	
	02G9	02G15	2.50	n/a	0.012	15.13	36.74	140.00	0.59	0.12	6.75	1.16	5.49	6.74	1.37	1.17	646.30	645.47	647.67	646.64	
	02G14	02G15	2.00	n/a	0.012	8.74	26.65	12.50	1.02	0.13	7.19	0.82	3.30	6.42	1.57	0.89	646.10	645.97	647.67	646.87	
	02G25	02G26	2.00	n/a	0.012	9.26	27.42	9.50	1.08	0.14	7.45	0.84	3.38	6.49	1.63	0.93	645.25	645.15	646.88	646.08	
	02G7	02G9	1.50	n/a	0.012	5.21	9.41	140.00	0.59	0.21	5.15	0.84	3.14	5.15	1.34	0.84	648.12	647.30	649.46	648.13	
	02G8	02G9	2.00	n/a	0.012	7.56	33.60	12.50	1.62	0.10	8.17	0.67	3.13	6.85	1.44	0.76	647.00	646.80	648.44	647.56	
02G3	02G13	02GG2OUT	2.00	n/a	0.012	9.66	16.67	83.00	0.40	0.16	5.20	1.14	3.08	3.08	2.00	2.00	642.04	641.71	645.17	645.03	CULVERT 02
	02G29	02G13	1.50	n/a	0.012	5.05	7.74	190.15	0.40	0.20	4.42	0.92	2.86	2.86	1.50	1.50	643.30	642.54	645.56	645.17	
02M	02M1	02M-OUT	2.00	6.00	0.250	15.38	214.76	137.43	1.24	6.82	3.65	0.52	0.67	0.55	1.76	2.00	642.25	640.54	644.01	644.00	6' FLAT BOT DITCH
	02M2	02M1	2.50	n/a	0.012	15.38	41.39	200.10	0.75	0.12	7.39	1.10	5.83	7.39	1.32	1.10	643.75	642.25	645.07	643.35	
	02M3	02M2	2.00	6.00	0.250	15.38	192.03	276.63	0.99	6.82	3.37	0.55	3.37	2.01	0.55	0.82	647.00	644.25	647.55	645.07	6' FLAT BOT DITCH

STATE OF TEXAS
SHAFEE YUSUF
94963
LICENSED
PROFESSIONAL ENGINEER
7/11/12

I. S. ENGINEERS, LLC
TBPE REG. # F-11657

Texas Department of Transportation
© 2012

IH 35W FROM NORTH TARRANT PKWY TO IH 820

DRAINAGE COMPUTATIONS

CONVEYANCE COMPUTATIONS

SHEET 15 OF 19

DESIGN	FED.RD. DIV.NO.	FEDERAL AID PROJECT NO.		HIGHWAY NO.
BV	6	(SEE TITLE SHEET)		IH 35W
GRAPHICS ZS	STATE	DISTRICT	COUNTY	SHEET NO.
CHECK SY	TEXAS	FTW	TARRANT	1200
CHECK MNM	CONTROL	SECTION	JOB	
	0014	16	255, ETC.	

FILENAME: S3BDRCOMP10.dgn

DRAWING DATE: 7/11/2012

CONVEYANCE COMPUTATIONS, CSJ: 0014-16-255

SYSTEM	UPSTREAM NODE	DOWNSTREAM NODE	RISE (FT)	SPAN (FT)	N VALUE	DISCHARGE (CFS)	CAPACITY (CFS)	ACTUAL LENGTH (FT)	SLOPE (%)	FULL FLOW SLOPE (%)	UNIFORM VELOCITY (FT/S)	ACTUAL VELOCITY (FT/S)	ACTUAL DEPTH UPSTREAM (FT)	ACTUAL DEPTH DOWNSTREAM (FT)	INVERT UPSTREAM (FT)	INVERT DOWNSTREAM (FT)	UPSTREAM HGL (FT)	DOWNSTREAM HGL (FT)	COMMENT
LAT-FCB5	FCB5	LAT-FCB5	1.50	n/a	0.012	11.21	24.86	17.65	4.12	0.97	12.97	6.34	1.50	0.89	636.40	635.67	638.99	636.57	
LAT-FCB6	FCB6	LAT-FCB6	1.50	n/a	0.012	4.94	18.16	30.55	2.20	0.19	8.30	3.05	1.29	0.58	636.55	635.88	637.84	636.46	
LINE BFG	BFG5	PB-BFG5	1.50	n/a	0.012	1.15	10.61	35.44	0.75	0.01	3.74	2.15	0.52	0.35	624.46	624.20	624.98	624.55	
	PB-BFG5	LAT-BFG4	1.50	n/a	0.012	1.15	10.61	58.02	0.75	0.01	3.73	3.01	0.40	0.35	624.20	623.76	624.60	624.11	
	LAT-BFG4	LAT-BFG3	1.50	n/a	0.012	2.09	10.60	41.98	0.75	0.03	4.44	3.60	0.54	0.47	623.76	623.45	624.31	623.92	
	LAT-BFG3	LAT-BFG2	1.50	n/a	0.012	2.38	10.60	21.74	0.75	0.04	4.58	3.75	0.58	0.51	623.45	623.28	624.03	623.79	
	LAT-BFG2	MH-BFG1	1.50	n/a	0.012	2.67	10.61	26.63	0.75	0.05	4.73	3.77	0.63	0.54	623.28	623.08	623.92	623.62	
	MH-BFG1	OUT-BFG	1.50	n/a	0.012	3.17	12.24	144.61	1.00	0.08	5.52	3.96	0.70	0.54	619.27	617.83	619.97	618.37	OUTFALLS TO BFC
LAT-BFG1	BFG1	MH-BFG1	1.50	n/a	0.012	0.54	22.20	32.26	3.29	0.00	5.00	1.57	0.37	0.17	624.06	623.00	624.43	623.17	
LAT-BFG2	BFG2	LAT-BFG2	1.50	n/a	0.012	0.30	17.96	34.24	2.15	0.00	3.62	1.62	0.24	0.14	624.02	623.28	624.26	623.42	
LAT-BFG3	BFG3	LAT-BFG3	1.50	n/a	0.012	0.32	16.00	34.48	1.71	0.00	3.39	1.65	0.25	0.15	624.04	623.45	624.29	623.60	
LAT-BFG4	BFG4	LAT-BFG4	1.50	n/a	0.012	0.97	13.75	34.95	1.26	0.01	4.26	2.10	0.46	0.28	624.20	623.76	624.66	624.04	
LINE BFH	BFH2	PB-BFH1	1.50	n/a	0.012	1.10	17.31	35.81	2.00	0.01	5.20	5.20	0.27	0.27	626.75	626.03	627.25	626.30	
	PB-BFH1	LAT-BFH1	1.50	n/a	0.012	1.10	17.31	194.88	2.00	0.01	5.19	5.18	0.26	0.26	626.03	622.14	626.42	622.40	
	LAT-BFH1	OUT-BFH	1.50	n/a	0.012	2.65	17.31	27.88	2.00	0.05	6.73	6.73	0.43	0.43	622.14	621.58	622.75	622.01	OUTFALLS TO BFC
LAT-BFH1	BFH1	LAT-BFH1	1.50	n/a	0.012	1.65	17.31	26.91	2.00	0.02	5.88	5.64	0.33	0.33	622.68	622.14	623.33	622.47	
LINE BFI	BFI2	PB-BFI1	1.50	n/a	0.012	1.11	17.31	39.61	2.00	0.01	5.21	5.18	0.50	0.27	626.80	626.01	627.30	626.28	
	PB-BFI1	LAT-BFI1	1.50	n/a	0.012	1.11	17.31	210.02	2.00	0.01	5.22	3.64	0.65	0.27	626.01	621.81	626.40	622.08	
	LAT-BFI1	OUT-BFI	1.50	n/a	0.012	2.64	17.32	53.79	2.00	0.05	6.71	3.87	0.62	0.42	621.81	620.73	622.43	621.15	OUTFALLS TO BFC
LAT-BFI1	BFI1	LAT-BFI1	1.50	n/a	0.012	1.64	17.31	37.86	2.00	0.02	5.84	5.74	0.33	0.33	622.57	621.81	623.21	622.14	
LINE BFJ	BFJ3	PB-BFJ3	1.50	n/a	0.012	1.51	10.60	26.94	0.75	0.02	4.05	2.22	0.61	0.40	624.42	624.22	625.04	624.62	
	PB-BFJ3	LAT-BFJ2	1.50	n/a	0.012	1.51	10.60	110.04	0.75	0.02	4.03	3.27	0.46	0.40	624.22	623.40	624.68	623.79	
	LAT-BFJ2	MH-BFJ1	1.50	n/a	0.012	3.15	10.60	98.37	0.75	0.08	4.96	3.99	0.69	0.58	623.40	622.66	624.08	623.24	
	MH-BFJ1	OUT-BFJ	1.50	n/a	0.012	4.78	17.51	108.51	2.05	0.18	8.00	4.47	0.87	0.56	617.31	615.09	618.19	615.65	OUTFALLS TO BFC
LAT-BFJ1	BFJ1	MH-BFJ1	1.50	n/a	0.012	1.74	20.83	26.38	2.90	0.02	6.79	2.27	0.67	0.31	622.26	621.50	622.94	621.81	
LAT-BFJ2	BFJ2	LAT-BFJ2	1.50	n/a	0.012	1.72	17.53	28.00	2.05	0.02	6.00	2.26	0.67	0.34	623.96	623.39	624.63	623.73	
LINE 03A	03A1	03A2	1.50	n/a	0.012	3.49	14.38	177.50	1.38	0.09	6.37	2.66	1.04	0.52	605.51	603.06	606.55	603.58	
	03A2	LAT-03A5	2.00	n/a	0.012	7.13	21.71	220.54	0.68	0.08	5.87	4.55	1.00	0.82	602.46	600.96	603.46	601.78	
	LAT-03A5	03A6	2.00	n/a	0.012	10.69	21.97	69.46	0.69	0.19	6.58	5.31	1.22	1.03	600.96	600.48	602.19	601.51	
	03A6	03A7	2.00	n/a	0.012	14.49	21.79	96.58	0.68	0.35	7.04	5.91	1.46	1.25	600.38	599.72	601.84	600.97	
	03A7	03A8	2.00	n/a	0.012	19.14	28.75	23.55	1.19	0.61	9.23	6.65	1.72	1.33	599.62	599.34	601.34	600.67	
	03A8	03A9	2.50	n/a	0.012	21.60	40.28	296.00	0.71	0.24	7.94	6.28	1.65	1.36	599.24	597.14	600.89	598.50	
	03A9	OUT-03A	2.50	n/a	0.012	24.65	42.54	54.80	0.79	0.31	8.49	5.53	2.13	2.50	597.03	596.60	599.17	599.10	CONNECTS TO CULVERT 3
LAT-03A5	03A3	PB-03A1	1.50	n/a	0.012	1.83	9.48	37.00	0.60	0.03	3.93	2.29	0.70	0.47	602.86	602.64	603.56	603.11	
LAT-03A5	PB-03A1	03A4	1.50	n/a	0.012	1.83	9.48	34.90	0.60	0.03	3.93	3.33	0.52	0.47	602.64	602.43	603.17	602.90	
LAT-03A5	03A4	PB-03A2	1.50	n/a	0.012	2.63	7.64	100.00	0.39	0.05	3.72	3.66	0.64	0.63	602.31	601.92	602.95	602.55	
LAT-03A5	PB-03A2	PB-03A3	1.50	n/a	0.012	2.63	7.64	55.15	0.39	0.05	3.72	3.72	0.63	0.65	601.92	601.71	602.55	602.36	
LAT-03A5	PB-03A3	03A5	1.50	n/a	0.012	2.63	7.64	13.05	0.39	0.05	3.72	3.58	0.65	0.62	601.71	601.66	602.36	602.27	
LAT-03A5	03A5	LAT-03A5	2.00	n/a	0.012	3.97	17.07	137.42	0.42	0.03	4.20	3.90	0.72	0.68	601.54	600.96	602.26	601.64	
LINE 03B	03B1	PB-03B1	1.50	n/a	0.012	2.67	12.26	7.38	1.00	0.06	5.25	2.47	0.88	0.53	602.43	602.35	603.31	602.88	
	PB-03B1	LAT-03B2	1.50	n/a	0.012	2.67	12.26	112.06	1.00	0.06	5.25	3.87	0.62	0.50	602.35	601.23	602.97	601.73	
	LAT-03B2	PB-03B2	1.50	n/a	0.012	4.50	12.24	101.99	1.00	0.16	6.08	6.05	0.66	0.64	601.18	600.16	602.00	600.82	
	PB-03B2	PB-03B3	1.50	n/a	0.012	4.50	12.24	12.91	1.00	0.16	6.03	5.55	0.70	0.68	600.16	600.03	600.97	600.73	
	PB-03B3	MH-03B3	1.50	n/a	0.012	4.50	12.23	10.00	1.00	0.16	6.05	5.51	0.70	0.68	600.03	599.93	600.86	600.63	
	MH-03B3	LAT-03B4	1.50	n/a	0.012	6.35	12.24	122.20	1.00	0.31	6.60	6.60	0.80	0.68	599.83	598.61	600.83	599.42	
	LAT-03B4	LAT-03B5	1.50	n/a	0.012	8.03	12.24	132.54	1.00	0.50	6.98	6.97	0.93	0.91	598.61	597.29	599.71	598.22	
	LAT-03B5	OUT-03B	1.50	n/a	0.012	9.68	12.23	28.74	1.00	0.72	7.20	7.07	1.09	1.04	597.29	597.00	598.49	598.09	CONNECTS TO CULVERT 3
LAT-03B2	03B2	LAT-03B2	1.50	n/a	0.012	1.92	12.22	7.93	1.00	0.03	5.25	2.11	2.05	0.77	601.31	601.23	602.02	602.00	
LAT-03B3	03B3	MH-03B3	1.50	n/a	0.012	1.98	12.21	13.28	1.00	0.03	4.82	1.98	1.92	0.83	600.13	600.00	600.86	600.83	
LAT-03B4	03B4	LAT-03B4	1.50	n/a	0.012	1.84	12.24	16.98	1.00	0.03	4.74	1.32	1.30	1.10	598.78	598.61	599.70	599.71	
LAT-03B5	03B5	LAT-03B5	1.50	n/a	0.012	1.86	12.24	17.01	1.00	0.03	4.75	1.22	1.18	1.21	597.45	597.28	598.49	598.49	
LINE 03C	03C1	PB-03C1	1.50	n/a	0.012	1.53	24.57	11.42	4.03	0.02	7.35	2.23	0.62	0.29	622.23	621.77	622.85	622.06	
	PB-03C1	MH-03C2	1.50	n/a	0.012	1.53	24.57	243.33	4.00	0.02	7.32	2.73	0.53	0.26	621.77	612.04	622.30	612.30	
	MH-03C2	OUT-03C	1.50	n/a	0.012	4.63	24.48	269.21	4.00	0.17	10.10	4.22	0.89	0.46	607.77	597.00	608.66	597.46	CONNECTS TO CULVERT 3
LAT-03C2	03C2	MH-03C2	1.50	n/a	0.012	3.21	12.29	4.36	1.01	0.08	5.55	2.59	0.99	0.59	621.18	621.14	622.17	621.73	
LINE 03D	03D1	PB-03D1	1.50	n/a	0.012	2.17	24.49	5.87	4.00	0.04	8.12	2.35	0.78	0.38	621.82	621.59	622.60	621.97	
	PB-03D1	MH-03D2	1.50	n/a	0.012	2.17	24.49	248.33	4.00	0.04	8.11	3.13	0.62	0.31	621.59	611.65	622.21	611.96	
	MH-03D2	OUT-03D	1.50	n/a	0.012	4.36	24.48	230.06	4.00	0.15	9.94	4.12	0.87	0.45	607.20	598.00	608.07	598.45	CONNECTS TO CULVERT 3
LAT-03D2	03D2	MH-03D2	1.50	n/a	0.012	2.29	12.27	6.97	1.00	0.04	5.03	2.38	0.80	0.49	621.95	621.88	622.75	622.37	
LINE 03E	03E1	PB-03E1	1.50	n/a	0.012	1.89	8.66	39.73	0.50	0.03	3.72	2.30	0.71	0.50	601.80	601.60	602.51	602.09	
	PB-03E1	LAT-03E2	1.50	n/a	0.012	1.89	8.66	199.86	0.50	0.03	3.69	3.49	0.52	0.50	601.60	600.60	602.11	601.10	
	LAT-03E2	03E4	1.50	n/a	0.012	3.97	8.68	26.42	0.50	0.12	4.55	4.34	0.77	0.74	600.60	600.47	601.37	601.21	
	03E4	LAT-03E3	1.50	n/a	0.012	5.75	10.60	199.61	0.75	0.26	5.77	4.95	0.94	0.83	600.35	598.86	601.29	599.68	
	LAT-03E3	OUT-03E	1.50	n/a	0.012	8.19	10.60	47.63	0.75	0.52	6.23	5.85	1.11	1.05	598.86	598.50	599.97	599.55	CONNECTS TO CULVERT 3
LAT-03E2	03E2	LAT-03E2	1.50	n/a	0.012	2.29	12.24	41.44	1.00	0.04	5.03	2.38	0.80	0.46	601.01	600.60	601.82	601.06	

STATE OF TEXAS
THOMAS E. T. COCHILL
87665
LICENSED
PROFESSIONAL ENGINEER

Thomas E. T. Cochill
7/6/12

CP&Y, INC.
TBPE REGISTRATION NO. F-1741

Texas Department of Transportation
© 2012

IH 35W FROM NORTH TARRANT PKWY TO IH 820

DRAINAGE COMPUTATIONS

CONVEYANCE COMPUTATIONS

SHEET 16 OF 19

DESIGN	FED. RD. DIV. NO.	FEDERAL AID PROJECT NO.		HIGHWAY NO.
CPY	6	(SEE TITLE SHEET)		IH 35W
GRAPHICS	STATE	DISTRICT	COUNTY	SHEET NO.
CPY	TEXAS	FTW	TARRANT	1201
CHECK	CONTROL	SECTION	JOB	
CPY	0014	16	255, ETC.	

DRAWING DATE: 7/13/2012 FILENAME: S3BDCOMP05.dgn

CONVEYANCE COMPUTATIONS, CSJ: 0014-16-255

SYSTEM	UPSTREAM NODE	DOWNSTREAM NODE	RISE (FT)	SPAN (FT)	N VALUE	DISCHARGE (CFS)	CAPACITY (CFS)	ACTUAL LENGTH (FT)	SLOPE (%)	FULL FLOW SLOPE (%)	UNIFORM VELOCITY (FT/S)	ACTUAL VELOCITY (FT/S)	ACTUAL DEPTH UPSTREAM (FT)	ACTUAL DEPTH DOWNSTREAM (FT)	INVERT UPSTREAM (FT)	INVERT DOWNSTREAM (FT)	UPSTREAM HGL (FT)	DOWNSTREAM HGL (FT)	COMMENT
LAT-03E3	03E3	LAT-03E3	1.50	n/a	0.012	2.80	12.23	41.48	1.00	0.06	5.33	2.50	0.91	0.51	599.27	598.86	600.19	599.37	
LINE 03F	03F1	03F2	1.50	n/a	0.012	4.43	17.14	77.50	1.96	0.15	7.72	2.91	1.21	0.54	606.77	605.25	607.98	605.79	
	03F2	03F4	2.00	n/a	0.012	11.52	21.81	85.00	0.68	0.22	6.67	5.39	1.29	1.08	604.75	604.17	606.04	605.25	
	03F4	PB-03F1	2.00	n/a	0.012	13.13	47.16	9.50	3.20	0.29	12.21	5.73	1.37	0.98	603.92	603.62	605.29	604.59	
	PB-03F1	LAT-03F5	2.00	n/a	0.012	13.13	32.92	70.00	1.56	0.29	9.35	6.05	1.30	0.95	603.62	602.52	604.92	603.47	
	LAT-03F5	LAT-03F6	2.00	n/a	0.012	15.99	15.58	42.74	0.35	0.43	5.22	5.79	1.64	1.44	602.52	602.38	604.17	603.82	
	LAT-03F6	MH-03F1	2.5	n/a	0.01	22.48	28.28	121.42	0.35	0.18	6.09	5.9	1.81	1.89	601.88	601.45	603.69	603.34	
	MH-03F1	03F9	2.5	n/a	0.01	25.57	28.28	220.05	0.35	0.23	6.13	6.11	1.99	1.72	601.35	600.58	603.34	602.3	
	03F9	03F10	3.50	n/a	0.012	38.89	69.36	107.68	0.35	0.13	7.06	5.37	2.47	2.77	599.58	599.20	602.04	601.97	
	03F10	03F11	3.50	n/a	0.012	39.77	69.36	55.10	0.35	0.13	6.99	4.72	2.87	3.01	599.10	598.91	601.97	601.92	
	03F11	03F12	3.50	n/a	0.012	43.73	69.36	74.97	0.35	0.16	7.24	4.84	3.11	3.28	598.81	598.54	601.92	601.83	
	03F12	03F13	3.50	n/a	0.012	52.24	69.36	29.92	0.35	0.23	7.39	5.49	3.38	3.40	598.44	598.34	601.83	601.74	
	03F13	OUT-03F	3.50	n/a	0.012	59.59	69.36	45.83	0.35	0.30	7.57	6.19	3.50	3.50	598.24	598.08	601.74	601.58	CONNECTS TO CULVERT 3
LAT-03F3	03F3	03F2	1.50	n/a	0.012	4.84	17.77	11.96	2.11	0.18	8.11	3.03	1.28	0.63	605.25	605.00	606.53	605.63	
LAT-03F5	03F5	LAT-03F5	1.50	n/a	0.012	3.00	11.91	23.76	0.95	0.07	5.33	2.06	1.15	1.38	603.00	602.78	604.15	604.16	
LAT-03F6	03F6	LAT-03F6	1.50	n/a	0.012	9.05	15.57	109.05	1.62	0.63	8.66	5.12	1.50	0.87	604.14	602.38	606.19	603.24	
LAT-03F7	03F7	MH-03F1	1.5	n/a	0.01	4.09	23.33	42.68	3.63	0.09	9.42	2.82	1.15	0.46	603.91	602.37	605.06	602.82	
LINE 03G	03G1	OUT-03G	3.00	n/a	0.012	60.82	136.70	30.81	3.09	0.71	17.77	9.15	2.67	1.83	597.55	596.60	600.22	598.43	CONNECTS TO CULVERT 3
	03G2	03G1	3.00	n/a	0.012	57.07	109.92	26.00	2.00	0.62	14.88	8.64	2.65	1.91	599.17	598.65	601.82	600.57	
	03G3	03G2	3.00	n/a	0.012	53.69	86.90	118.00	1.25	0.55	12.23	8.33	2.57	1.85	600.86	599.39	603.43	601.24	
	LAT-03G4	03G3	3.00	n/a	0.012	47.83	145.41	95.32	3.50	0.44	17.49	7.34	2.60	1.34	604.83	601.50	607.44	602.84	
	03G6	LAT-03G4	3.00	n/a	0.012	17.89	145.50	12.18	3.50	0.06	13.27	3.47	2.05	2.60	605.26	604.83	607.31	607.44	
	03G7	03G6	2.50	n/a	0.012	10.89	82.79	67.00	3.00	0.06	11.10	3.39	1.55	0.66	608.82	606.81	610.37	607.46	
	03G9	03G7	2.00	n/a	0.012	7.30	45.66	50.00	3.00	0.09	10.11	3.08	1.41	0.58	611.67	610.17	613.08	610.75	
LINE 03H	03H7	PB-03H7	1.50	n/a	0.012	2.35	12.24	129.14	1.00	0.04	5.07	2.39	0.82	0.46	614.57	613.28	615.39	613.74	
	PB-03H7	PB-03H6	1.50	n/a	0.012	2.30	12.23	23.54	1.00	0.04	5.06	3.70	0.57	0.47	613.28	613.05	613.85	613.51	
	PB-03H6	03H6	1.50	n/a	0.012	2.29	12.24	101.05	1.00	0.04	5.04	3.58	0.59	0.46	613.05	612.04	613.63	612.49	
	03H6	03H5	1.50	n/a	0.012	6.62	14.99	247.00	1.50	0.34	7.77	5.06	1.04	0.73	611.94	608.23	612.98	608.96	
	03H5	03H4	1.50	n/a	0.012	10.09	17.31	173.76	2.00	0.79	9.62	6.27	1.28	0.86	608.13	604.65	609.41	605.52	
	03H4	LAT-03H3	2.00	n/a	0.012	14.32	37.28	8.00	2.00	0.34	10.52	6.13	1.39	1.12	604.15	603.99	605.55	605.12	
	PB-03H5	PB-03H4	2.00	n/a	0.012	14.32	37.30	13.84	2.00	0.34	10.52	6.28	1.36	1.09	603.99	603.72	605.36	604.80	
	PB-03H4	PB-03H3	2.00	n/a	0.012	14.32	37.28	15.50	2.00	0.34	10.52	6.28	1.36	1.08	603.72	603.41	605.08	604.48	
	PB-03H3	PB-03H2	2.00	n/a	0.012	14.32	37.30	13.84	2.00	0.34	10.52	6.28	1.36	1.09	603.41	603.13	604.77	604.22	
	PB-03H2	LAT-03H3	2.00	n/a	0.012	14.32	37.09	15.21	1.98	0.34	10.47	6.28	1.36	1.08	603.13	602.83	604.49	603.91	
	LAT-03H3	LAT-03H2	2.00	n/a	0.012	16.08	37.29	144.99	2.00	0.43	10.83	6.61	1.45	0.97	602.83	599.93	604.28	600.90	
	LAT-03H2	03H1	2.00	n/a	0.012	17.74	37.29	44.54	2.00	0.52	11.10	6.80	1.55	1.11	599.93	599.04	601.48	600.15	
	03H1	PB-03H1	2.00	n/a	0.012	18.30	37.28	59.47	2.00	0.56	11.17	6.91	1.57	1.10	598.28	597.09	599.85	598.20	
	PB-03H1	OUT-03H	2.00	n/a	0.012	18.24	37.32	4.69	2.00	0.55	11.18	7.04	1.54	1.35	597.09	597.00	598.63	598.35	CONNECTS TO CULVERT 3
LAT-03H2	03H2	LAT-03H2	1.50	n/a	0.012	1.94	12.23	17.93	1.00	0.03	4.80	1.38	1.12	1.30	600.36	600.18	601.48	601.48	
LAT-03H3	03H3	LAT-03H3	1.50	n/a	0.012	1.96	12.25	15.87	1.00	0.03	4.83	1.51	1.03	1.20	603.24	603.08	604.27	604.28	
LINE 03I	03I5	LAT-03I4	1.50	n/a	0.012	4.31	12.26	298.50	1.00	0.14	6.02	2.88	1.19	0.64	613.18	610.19	614.37	610.83	
	LAT-03I4	LAT-03I3	1.50	n/a	0.012	7.62	12.24	50.00	1.00	0.45	6.92	5.65	1.07	0.91	610.19	609.69	611.25	610.60	
	LAT-03I3	MH-03I2	1.50	n/a	0.012	8.82	12.24	48.33	1.00	0.60	7.12	5.98	1.17	1.00	609.69	609.20	610.85	610.21	
	MH-03I2	MH-03I1	2.00	n/a	0.012	12.75	26.36	346.66	1.00	0.27	7.88	5.81	1.32	1.02	608.70	605.23	610.02	606.26	
	MH-03I1	PB-03I1	2.00	n/a	0.012	16.11	45.67	62.82	3.00	0.43	11.98	6.39	1.50	0.92	599.10	597.21	600.60	598.13	
	PB-03I1	OUT-03I	2.00	n/a	0.012	16.06	45.62	7.15	2.99	0.43	11.47	6.61	1.45	1.17	597.21	597.00	598.66	598.17	CONNECTS TO CULVERT 3
LAT-03I1	03I1	MH-03I1	1.50	n/a	0.012	4.01	12.28	10.93	1.01	0.12	5.90	2.79	1.14	0.65	614.18	614.07	615.32	614.72	
LAT-03I2	03I2	MH-03I2	1.50	n/a	0.012	4.15	12.20	4.74	0.99	0.13	5.93	2.83	1.16	0.69	610.68	610.63	611.84	611.32	
LAT-03I3	03I3	LAT-03I3	1.50	n/a	0.012	1.28	31.15	3.86	6.48	0.01	8.24	1.15	0.91	1.17	609.93	609.68	610.84	610.85	
LAT-03I4	03I4	LAT-03I4	1.50	n/a	0.012	3.57	29.35	3.48	5.75	0.10	10.68	2.68	1.06	0.51	610.38	610.18	611.44	610.69	
LINE 03J	03J6	PB-03J6	1.50	n/a	0.012	2.89	12.31	10.88	1.01	0.06	5.39	2.51	0.93	0.55	617.57	617.46	618.50	618.01	
	PB-03J6	MH-03J5	1.50	n/a	0.012	2.89	12.24	298.33	1.00	0.06	5.38	3.84	0.66	0.51	617.46	614.48	618.12	614.99	
	MH-03J5	LAT-03J4	1.50	n/a	0.012	5.57	12.24	298.33	1.00	0.24	6.38	4.86	0.93	0.74	614.16	611.18	615.09	611.92	
	LAT-03J4	MH-03J3	1.50	n/a	0.012	8.19	12.24	38.52	1.00	0.52	7.02	5.76	1.13	0.96	611.18	610.79	612.30	611.75	
	MH-03J3	LAT-03J2	1.50	n/a	0.012	9.10	12.24	58.14	1.00	0.64	7.17	6.08	1.18	1.02	610.69	610.11	611.88	611.14	
	LAT-03J2	MH-03J1	1.50	n/a	0.012	11.43	12.24	248.33	1.00	1.01	7.36	7.00	1.31	1.23	610.11	607.63	611.42	608.86	
	MH-03J1	PB-03J1	1.50	n/a	0.012	14.29	21.20	103.75	3.00	1.57	11.14	8.20	1.44	0.97	601.27	598.15	602.70	599.12	
	PB-03J1	OUT-03J	1.50	n/a	0.012	14.29	21.17	5.12	2.99	1.57	11.55	8.33	1.39	1.22	598.15	598.00	599.54	599.22	CONNECTS TO CULVERT 3
LAT-03J1	03J1	MH-03J1	1.50	n/a	0.012	3.42	12.24	7.68	1.00	0.09	5.64	2.64	1.03	0.61	614.60	614.52	615.63	615.13	
LAT-03J2	03J2	LAT-03J2	1.50	n/a	0.012	2.58	20.79	10.64	2.89	0.05	7.60	2.14	0.97	1.31	610.42	610.11	611.39	611.42	
LAT-03J3	03J3	MH-03J3	1.50	n/a	0.012	1.01	9.10	9.05	0.55	0.01	3.24	2.11	0.47	0.35	611.49	611.44	611.96	611.79	
LAT-03J4	03J4	LAT-03J4	1.50	n/a	0.012	2.99	29.01	10.88	5.62	0.07	10.05	2.54	0.95	0.40	611.79	611.18	612.74	611.58	
LAT-03J5	03J5	MH-03J5	1.50	n/a	0.012	2.91	8.67	9.57	0.50	0.07	4.20	2.52	0.93	0.93	614.21	614.16	615.14	615.09	

STATE OF TEXAS
THOMAS E. T. COCHILL
87665
LICENSED
PROFESSIONAL ENGINEER

Thomas E. T. Cochill
7/6/12

CP&Y, INC.
TBPE REGISTRATION NO. F-1741

Texas Department of Transportation
© 2012

IH 35W FROM NORTH TARRANT PKWY TO IH 820

DRAINAGE COMPUTATIONS
CONVEYANCE COMPUTATIONS

SHEET 17 OF 19

DESIGN	FED. RD. DIV. NO.	FEDERAL AID PROJECT NO.		HIGHWAY NO.
CPY	6	(SEE TITLE SHEET)		IH 35W
GRAPHICS	STATE	DISTRICT	COUNTY	SHEET NO.
CPY	TEXAS	FTW	TARRANT	1202
CHECK	CONTROL	SECTION	JOB	
CPY	0014	16	255, ETC.	

DRAWING DATE: 7/13/2012 FILENAME: S3BDCOMP06.dgn

CONVEYANCE COMPUTATIONS, CSJ: 0014-16-255

SYSTEM	UPSTREAM NODE	DOWNSTREAM NODE	RISE (FT)	SPAN (FT)	N VALUE	DISCHARGE (CFS)	CAPACITY (CFS)	ACTUAL LENGTH (FT)	SLOPE (%)	FULL FLOW SLOPE (%)	UNIFORM VELOCITY (FT/S)	ACTUAL VELOCITY (FT/S)	ACTUAL DEPTH UPSTREAM (FT)	ACTUAL DEPTH DOWNSTREAM (FT)	INVERT UPSTREAM (FT)	INVERT DOWNSTREAM (FT)	UPSTREAM HGL (FT)	DOWNSTREAM HGL (FT)	COMMENT
LINE 03K	03K5	03K4	1.50	n/a	0.012	2.84	12.24	297.65	1.00	0.06	5.34	2.50	0.92	0.51	615.04	612.06	615.95	612.57	
	03K4	03K3	1.50	n/a	0.012	6.10	12.24	295.11	1.00	0.29	6.56	4.96	0.99	0.78	611.96	609.01	612.94	609.79	
	03K3	LAT-03K1	1.50	n/a	0.012	9.97	17.31	136.70	2.00	0.77	9.58	6.35	1.25	0.86	608.91	606.17	610.16	607.03	
	LAT-03K1	03K2	1.50	n/a	0.012	12.41	17.31	107.24	2.00	1.19	10.06	7.37	1.36	1.00	606.17	604.00	607.53	605.00	
	03K2	PB-03K2	1.50	n/a	0.012	15.64	21.20	30.68	3.00	1.89	11.04	8.91	1.46	1.12	599.63	598.65	601.10	599.77	
	PB-03K2	OUT-03K	1.50	n/a	0.012	15.64	21.19	9.72	3.00	1.89	11.00	9.03	1.42	1.23	598.65	598.35	600.07	599.58	CONNECTS TO CULVERT 3
LAT-03K1	03K1	LAT-03K1	1.50	n/a	0.012	2.73	12.18	8.48	0.99	0.06	5.28	1.70	1.28	1.36	606.32	606.17	607.55	607.53	
LINE 03L	PB-03L1	OUT-03L	3.50	n/a	0.012	72.74	287.19	18.03	6.00	0.45	23.63	9.23	2.67	1.87	599.40	598.32	602.07	600.19	CONNECTS TO CULVERT 3
	03L1	PB-03L1	3.50	n/a	0.012	72.74	287.19	8.91	6.00	0.45	23.63	8.45	2.93	1.95	599.94	599.40	602.87	601.35	
	03L2	03L1	3.50	n/a	0.012	71.41	251.55	50.49	4.60	0.43	21.36	7.44	3.45	1.59	605.26	602.94	608.72	604.53	
	03L3	03L2	3.50	n/a	0.012	66.90	135.37	231.94	1.33	0.38	13.27	8.02	2.83	1.85	609.45	606.36	612.28	608.21	
	LAT-03L4	03L3	3.50	n/a	0.012	58.83	69.34	202.27	0.35	0.29	7.62	7.45	2.68	2.73	610.27	609.56	612.95	612.28	
	MH-03L1	LAT-03L4	3.50	n/a	0.012	58.67	69.59	96.06	0.35	0.29	7.60	7.52	2.65	2.68	610.61	610.27	613.25	612.95	
	LAT-03LF1	MH-03L1	3.50	n/a	0.012	48.38	69.34	138.18	0.35	0.20	7.37	7.15	2.32	2.54	611.19	610.71	613.51	613.25	
	PB-03L2	LAT-03LF1	3.50	n/a	0.012	48.38	69.39	55.73	0.35	0.20	7.37	7.29	2.28	2.32	611.39	611.19	613.67	613.51	
	LAT-03LF2	PB-03L2	3.50	n/a	0.012	48.38	69.35	81.14	0.35	0.20	7.37	7.35	2.26	2.28	611.67	611.39	613.94	613.67	
	PB-03L3	LAT-03LF2	3.50	n/a	0.012	48.38	69.36	61.68	0.35	0.20	7.37	7.35	2.26	2.26	611.89	611.67	614.15	613.94	
	03L7	PB-03L3	3.50	n/a	0.012	48.38	69.36	16.00	0.35	0.20	7.37	7.32	2.27	2.26	611.94	611.89	614.21	614.15	
	03L8	03L7	2.50	n/a	0.012	20.35	52.84	45.00	1.22	0.21	9.52	4.25	2.35	1.20	612.59	612.04	614.95	613.24	
LAT-03L4	03L4	LAT-03L4	1.50	n/a	0.012	0.69	35.42	42.20	8.37	0.00	7.47	1.45	0.47	0.15	615.30	611.77	615.77	611.92	
LAT-03LF1*	03LF1	LAT-03LF1	2.50	n/a	0.012	36.80	134.15	16.48	7.88	0.69	22.11	7.50	2.50	1.35	612.99	611.69	616.88	613.04	*SEE NOTE
LAT-03LF2*	03LF2	LAT-03LF2	3.00	n/a	0.012	49.18	147.57	64.33	3.60	0.46	17.80	6.96	3.00	1.44	614.24	611.92	618.18	613.36	*SEE NOTE
LINE 04A	04A1	MH-04A1	1.50	n/a	0.012	4.55	27.37	60.22	5.00	0.16	10.89	2.94	1.23	0.44	618.52	615.51	619.75	615.95	CONNECTS TO CULVERT 4
	LAT-04A2	MH-04A1	3.00	n/a	0.012	69.54	94.63	308.35	1.48	0.93	13.79	10.42	2.69	2.03	616.92	612.35	619.60	614.37	CONNECTS TO CULVERT 4
	04A3	LAT-04A2	3.00	n/a	0.012	60.04	94.63	47.02	1.48	0.69	13.42	9.29	2.58	2.03	617.61	616.92	620.19	618.94	
	LAT-04A4	04A3	3.00	n/a	0.012	57.04	77.73	294.16	1.00	0.62	11.31	9.07	2.50	2.02	621.26	618.31	623.75	620.33	
	04A5	LAT-04A4	3.00	n/a	0.012	52.17	77.73	48.53	1.00	0.52	11.11	8.53	2.42	2.00	621.74	621.26	624.16	623.26	
	MH-04A2	04A5	2.50	n/a	0.012	47.93	60.46	190.94	1.60	1.16	12.83	9.86	2.42	1.80	625.31	622.25	627.73	624.05	
	04A6	MH-04A2	2.50	n/a	0.012	47.93	60.46	235.96	1.60	1.16	12.83	9.86	2.42	1.79	629.19	625.41	631.60	627.20	
	04A7	04A6	2.50	n/a	0.012	41.14	48.65	90.56	1.04	0.86	10.45	8.62	2.33	1.90	630.22	629.29	632.56	631.18	
	04A8	04A7	2.50	n/a	0.012	34.02	40.59	179.60	0.72	0.59	8.73	7.70	2.11	1.86	631.62	630.32	633.73	632.18	
	04A9	04A8	2.50	n/a	0.012	28.27	31.72	307.55	0.44	0.40	6.78	6.61	2.04	2.01	633.07	631.72	635.11	633.73	
	04A10	04A9	2.50	n/a	0.012	25.20	28.28	122.52	0.35	0.32	6.04	6.06	1.97	1.71	634.16	633.73	636.13	635.44	
	04A11	04A10	2.50	n/a	0.012	16.68	28.28	60.20	0.35	0.14	5.66	4.60	1.73	1.87	634.48	634.27	636.21	636.13	
	04A12	04A11	2.00	n/a	0.012	12.96	15.60	136.56	0.35	0.28	5.25	4.94	1.56	1.63	635.06	634.58	636.62	636.21	
	04A13	04A12	1.50	n/a	0.012	7.67	9.31	15.56	0.58	0.45	5.52	4.34	1.50	1.07	635.75	635.66	637.51	636.73	
LAT-04A2	04A2	LAT-04A2	1.50	n/a	0.012	11.08	33.32	18.00	7.41	0.95	16.06	6.27	1.50	0.79	619.00	617.67	621.55	618.45	
LAT-04A4	04A4	LAT-04A4	1.50	n/a	0.012	5.69	24.21	18.00	3.91	0.25	10.62	3.30	1.41	0.60	622.71	622.01	624.12	622.61	
LINE 04B	04B1	04B2	1.50	n/a	0.012	1.88	12.24	32.40	1.00	0.03	4.76	2.30	0.71	0.42	618.63	618.31	619.34	618.73	
	04B2	04B3	1.50	n/a	0.012	2.83	12.24	47.79	1.00	0.06	5.35	3.71	0.67	0.51	617.50	617.02	618.17	617.54	
	04B3	OUT-04B	1.50	n/a	0.012	3.72	14.62	29.44	1.43	0.11	6.55	6.20	0.56	0.54	616.92	616.50	617.68	617.06	CONNECTS TO CULVERT 4
LINE 04C	04C1	PB-04C1	1.50	n/a	0.012	3.44	13.42	100.78	1.20	0.09	6.03	2.65	1.03	0.54	618.34	617.13	619.37	617.67	
	PB-04C1	OUT-04C	1.50	n/a	0.012	3.44	13.42	10.65	1.20	0.09	6.00	4.18	0.70	0.59	617.13	617.00	617.83	617.59	CONNECTS TO CULVERT 4
LINE 04D	04D1	PB-04D1	1.50	n/a	0.012	2.87	11.17	32.04	0.83	0.06	5.03	2.51	0.93	0.55	617.82	617.55	618.75	618.10	
	PB-04D1	OUT-04D	1.50	n/a	0.012	2.87	11.19	6.34	0.84	0.06	5.01	3.96	0.64	0.58	617.55	617.50	618.20	618.08	CONNECTS TO CULVERT 4
LINE 04H	04H14	LAT-FCB	2.00	n/a	0.012	6.64	18.61	37.71	0.50	0.07	5.16	3.00	1.33	1.33	631.22	631.04	632.55	632.36	
	LAT-FCB	04H13	2.00	n/a	0.012	13.29	18.64	259.29	0.50	0.29	6.04	6.00	1.33	1.31	631.04	629.74	632.36	631.05	
	04H13	04H12	2.50	n/a	0.012	17.10	33.80	297.62	0.50	0.15	6.51	5.97	1.41	1.32	629.24	627.75	630.65	629.07	
	04H12	PB-04H8	2.50	n/a	0.012	20.88	33.81	164.72	0.50	0.22	6.87	6.48	1.56	1.49	627.65	626.83	629.21	628.32	
	PB-04H8	PB-04H7	2.50	n/a	0.012	20.88	33.74	15.86	0.50	0.22	6.87	6.52	1.55	1.50	626.83	626.75	628.38	628.25	
	PB-04H7	PB-04H6	2.50	n/a	0.012	20.88	33.82	13.18	0.50	0.22	6.87	6.52	1.55	1.50	626.75	626.68	628.30	628.18	
	PB-04H6	PB-04H5	2.50	n/a	0.012	20.88	33.74	15.86	0.50	0.22	6.87	6.52	1.55	1.50	626.68	626.60	628.23	628.10	
	PB-04H5	04H11	2.50	n/a	0.012	20.88	33.81	100.52	0.50	0.22	6.87	6.48	1.56	1.49	626.60	626.10	628.16	627.59	
	04H11	04H10	2.50	n/a	0.012	24.50	33.79	300.89	0.50	0.30	7.13	6.89	1.70	1.65	626.00	624.50	627.70	626.15	
	04H10	04H9	2.50	n/a	0.012	28.21	33.81	192.72	0.50	0.40	7.24	7.18	1.87	2.04	624.40	623.44	626.27	625.48	
	04H9	04H8	2.50	n/a	0.012	30.59	33.79	54.82	0.50	0.47	7.34	6.84	2.14	2.21	623.34	623.06	625.48	625.27	
	04H8	04H7	2.50	n/a	0.012	32.16	33.78	48.06	0.50	0.52	7.23	6.79	2.31	2.33	622.96	622.72	625.27	625.05	
	04H7	04H5	2.50	n/a	0.012	33.70	33.80	352.43	0.50	0.57	7.04	6.92	2.43	2.46	622.62	620.86	625.05	623.31	
	04H5	04H4	2.50	n/a	0.012	36.99	33.80	148.83	0.50	0.69	7.73	7.54	2.50	2.26	620.76	620.01	623.31	622.27	
	04H4	PB-04H4	2.50	n/a	0.012	37.84	33.86	18.33	0.50	0.72	7.91	7.88	2.36	2.30	619.91	619.82	622.27	622.12	
	PB-04H4	PB-04H3	2.50	n/a	0.012	37.79	33.92	10.92	0.50	0.72	7.90	7.99	2.30	2.27	619.82	619.76	622.12	622.03	
	PB-04H3	04H3	2.50	n/a	0.012	37.76	33.87	21.71	0.50	0.72	7.89	8.06	2.27	2.08	619.76	619.65	622.03	621.73	
	04H3	04H2	3.00	n/a	0.012	39.62	54.97	148.37	0.50	0.30	8.01	7.63	2.07	1.98	618.40	617.65	620.46	619.64	

*FLOW BASED ON MAR, 2008 SUBMITTAL TO TXDOT BY BOYDSTON DESIGNS, INC.

STATE OF TEXAS
THOMAS E. T. COCHILL
87665
LICENSED
PROFESSIONAL ENGINEER

Thomas E. T. Cochill
7/6/12

CP&Y, INC.
TBPE REGISTRATION NO. F-1741

Texas Department of Transportation
© 2012

IH 35W FROM NORTH TARRANT PKWY TO IH 820

DRAINAGE COMPUTATIONS
CONVEYANCE COMPUTATIONS

SHEET 18 OF 19

DESIGN	FED.RD. DIV.NO.	FEDERAL AID PROJECT NO.		HIGHWAY NO.
CPY	6	(SEE TITLE SHEET)		IH 35W
GRAPHICS CPY	STATE	DISTRICT	COUNTY	SHEET NO.
CHECK CPY	TEXAS	FTW	TARRANT	1203
CHECK CPY	CONTROL	SECTION	JOB	
	0014	16	255, ETC.	

DRAWING DATE: 7/13/2012 FILENAME: S3BDCOMPOT.dgn

CONVEYANCE COMPUTATIONS, CSJ: 0014-16-255

SYSTEM	UPSTREAM NODE	DOWNSTREAM NODE	RISE (FT)	SPAN (FT)	N VALUE	DISCHARGE (CFS)	CAPACITY (CFS)	ACTUAL LENGTH (FT)	SLOPE (%)	FULL FLOW SLOPE (%)	UNIFORM VELOCITY (FT/S)	ACTUAL VELOCITY (FT/S)	ACTUAL DEPTH UPSTREAM (FT)	ACTUAL DEPTH DOWNSTREAM (FT)	INVERT UPSTREAM (FT)	INVERT DOWNSTREAM (FT)	UPSTREAM HGL (FT)	DOWNSTREAM HGL (FT)	COMMENT
LINE 04H	04H2	LAT-04H15	3.00	n/a	0.012	40.82	54.95	49.02	0.50	0.32	8.05	7.77	2.09	2.03	617.55	617.31	619.64	619.34	
	LAT-04H15	04H1	3.00	n/a	0.012	41.47	54.97	99.36	0.50	0.33	8.07	7.82	2.11	2.05	617.31	616.81	619.42	618.86	
	04H1	OUT-04H	3.00	n/a	0.012	42.42	54.95	42.42	0.50	0.34	8.07	7.90	2.13	2.09	615.39	615.18	617.52	617.27	CONNECTS TO CULVERT 4
LAT-04H6	04H6	04H3	1.50	n/a	0.012	0.28	12.25	41.87	1.00	0.00	2.71	1.58	0.24	0.16	622.40	621.98	622.64	622.14	
LAT-04H15	04H15	LAT-04H15	1.50	n/a	0.012	0.98	12.24	37.62	1.00	0.01	3.94	0.80	0.98	1.36	618.44	618.06	619.41	619.42	
LINE FCB	FCB4	FCB3	1.50	n/a	0.012	3.08	8.64	37.31	0.50	0.07	4.25	2.56	0.97	0.65	632.91	632.73	633.88	633.37	
	FCB3	FCB2	1.50	n/a	0.012	3.96	8.66	40.00	0.50	0.12	4.54	4.22	0.79	0.74	632.63	632.43	633.41	633.17	
	FCB2	FCB1	1.50	n/a	0.012	5.38	8.66	155.00	0.50	0.22	4.85	4.69	0.93	1.00	632.33	631.55	633.25	632.55	
	FCB1	LAT-FCB	1.50	n/a	0.012	6.97	8.62	44.39	0.50	0.37	5.13	5.03	1.10	1.13	631.45	631.23	632.55	632.36	CONNECTS TO LINE 04H
LINE 04I	04I9	04I8	1.50	n/a	0.012	3.34	8.66	297.01	0.50	0.09	4.37	2.62	1.02	0.67	634.85	633.37	635.87	634.04	
	04I8	04I7	1.50	n/a	0.012	6.53	8.66	297.01	0.50	0.33	5.08	5.00	1.04	0.99	633.27	631.78	634.30	632.77	
	04I7	04I6	2.00	n/a	0.012	9.42	18.64	297.74	0.50	0.15	5.60	5.25	1.11	1.06	631.28	629.79	632.39	630.85	
	04I6	04I5	2.00	n/a	0.012	12.22	18.64	298.53	0.50	0.25	6.02	5.80	1.27	1.23	629.69	628.20	630.96	629.43	
	04I5	04I4	2.00	n/a	0.012	14.77	18.64	298.53	0.50	0.36	6.18	6.11	1.44	1.54	628.10	626.61	629.54	628.15	
	04I4	04I3	2.00	n/a	0.012	17.24	18.64	298.54	0.50	0.49	6.24	6.24	1.64	1.52	626.51	625.01	628.15	626.53	
	04I3	04I2	2.00	n/a	0.012	19.60	26.36	298.52	1.00	0.64	8.69	7.19	1.62	1.35	624.91	621.93	626.53	623.28	
	04I2	04I1	2.00	n/a	0.012	21.94	26.36	298.48	1.00	0.80	8.79	7.70	1.70	1.48	621.83	618.84	623.53	620.32	
	04I1	OUT-04I	2.00	n/a	0.012	24.25	26.36	174.34	1.00	0.98	8.93	8.29	1.76	1.62	617.78	616.04	619.54	617.66	CONNECTS TO CULVERT 4
LINE 04J	04J8	PB-04J8	1.50	n/a	0.012	4.88	8.63	10.67	0.50	0.18	4.74	3.04	1.28	0.85	634.36	634.31	635.64	635.16	
	PB-04J8	MH-04J7	1.50	n/a	0.012	4.88	8.63	298.33	0.50	0.18	4.73	4.67	0.86	0.85	634.31	632.82	635.17	633.66	
	MH-04J7	MH-04J6	1.50	n/a	0.012	7.45	8.66	296.47	0.50	0.43	5.15	5.10	1.16	1.06	632.72	631.23	633.87	632.29	
	MH-04J6	MH-04J5	2.00	n/a	0.012	9.87	18.64	295.02	0.50	0.16	5.67	5.33	1.14	1.09	630.73	629.26	631.88	630.34	
	MH-04J5	MH-04J4	2.00	n/a	0.012	12.15	18.64	295.06	0.50	0.25	5.98	5.78	1.27	1.23	629.16	627.68	630.43	628.92	
	MH-04J4	MH-04J3	2.00	n/a	0.012	14.30	18.64	295.06	0.50	0.34	6.19	6.11	1.40	1.39	627.58	626.11	628.98	627.50	
	MH-04J3	MH-04J2	2.00	n/a	0.012	16.35	26.37	295.06	1.00	0.44	8.35	6.51	1.49	1.20	626.01	623.06	627.50	624.25	
	MH-04J2	MH-04J1	2.00	n/a	0.012	18.43	26.37	295.06	1.00	0.57	8.60	6.93	1.58	1.30	622.96	620.01	624.54	621.30	
	MH-04J1	OUT-04J	2.00	n/a	0.012	20.45	26.36	240.72	1.00	0.70	8.75	7.42	1.64	1.40	619.03	616.62	620.67	618.02	CONNECTS TO CULVERT 4
LAT-04J1	04J1	MH-04J1	1.50	n/a	0.012	2.91	12.40	10.92	1.03	0.07	5.44	2.52	0.93	0.54	623.21	623.10	624.15	623.65	
LAT-04J2	04J2	MH-04J2	1.50	n/a	0.012	2.91	12.51	9.57	1.05	0.07	5.46	2.52	0.93	0.54	625.33	625.23	626.26	625.77	
LAT-04J3	04J3	MH-04J3	1.50	n/a	0.012	2.90	12.26	9.27	1.00	0.06	5.40	2.52	0.93	0.55	627.44	627.35	628.37	627.89	
LAT-04J4	04J4	MH-04J4	1.50	n/a	0.012	2.90	12.22	8.63	1.00	0.06	5.36	2.52	0.93	0.55	629.23	629.14	630.16	629.69	
LAT-04J5	04J5	MH-04J5	1.50	n/a	0.012	2.92	12.22	9.53	1.00	0.07	5.40	2.52	0.93	0.55	630.73	630.64	631.66	631.18	
LAT-04J6	04J6	MH-04J6	1.50	n/a	0.012	2.93	12.27	8.46	1.01	0.07	5.42	2.52	0.94	0.55	632.24	632.16	633.18	632.71	
LAT-04J7	04J7	MH-04J7	1.50	n/a	0.012	2.91	12.25	7.49	1.00	0.07	5.40	2.52	0.93	0.55	633.44	633.37	634.37	633.92	

STATE OF TEXAS
THOMAS E. T. COCHILL
87665
LICENSED
PROFESSIONAL ENGINEER

Thomas E. T. Cochill
7/6/12

CP&Y, INC.
TBPE REGISTRATION NO. F-1741

Texas Department of Transportation
© 2012

IH 35W FROM NORTH TARRANT PKWY TO IH 820

DRAINAGE COMPUTATIONS

CONVEYANCE COMPUTATIONS

SHEET 19 OF 19

DESIGN	FED. RD. DIV. NO.	FEDERAL AID PROJECT NO.		HIGHWAY NO.
CPY	6	(SEE TITLE SHEET)		IH 35W
GRAPHICS	STATE	DISTRICT	COUNTY	SHEET NO.
CPY	TEXAS	FTW	TARRANT	1204
CHECK	CONTROL	SECTION	JOB	
CPY	0014	16	255, ETC.	

DRAWING DATE: 7/13/2012 FILENAME: S3BDCOMP08.dgn

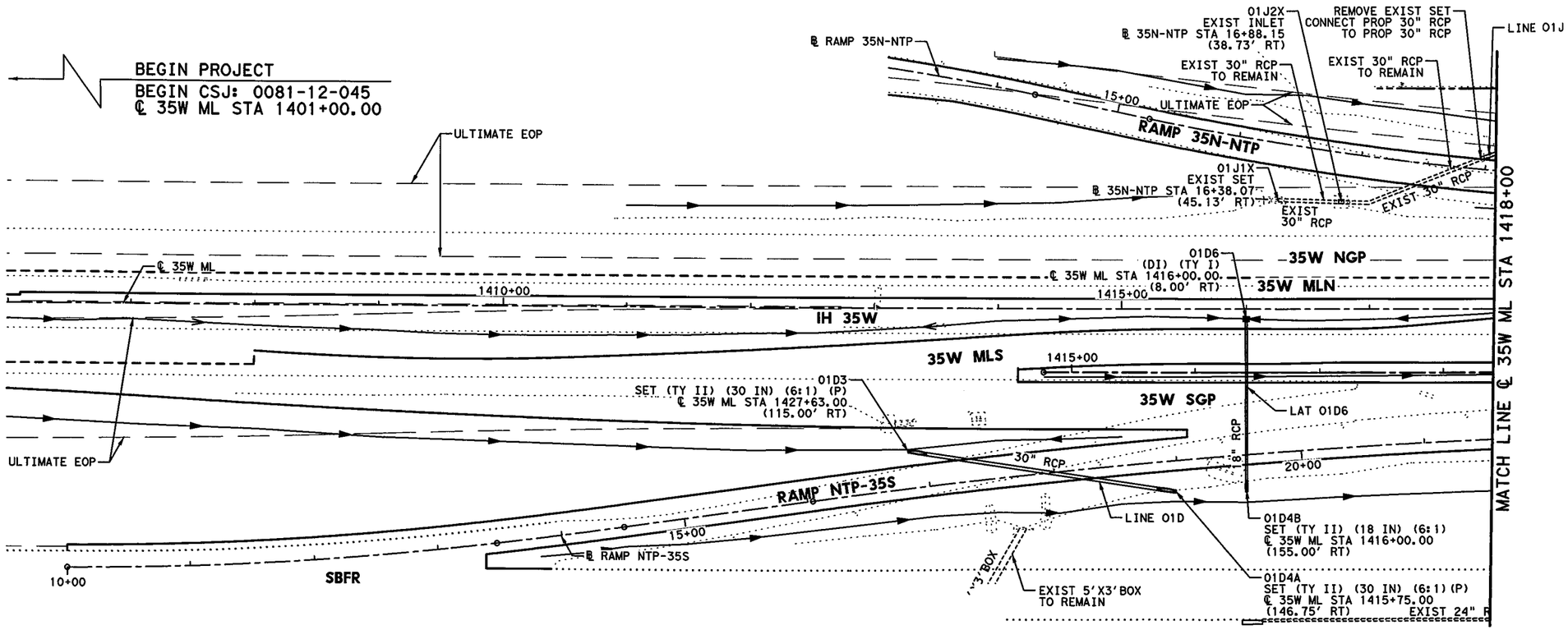

GENERAL NOTES

1. ALL LOCATIONS FOR CURB INLETS ARE SHOWN TO THE FACE OF CURB.
2. ALL LOCATIONS FOR DITCH INLETS, GRATE INLETS, AND MANHOLES ARE SHOWN TO CENTER POINT (CP) OF INLET BOX OR MANHOLE BOX.
3. REFERENCE ROADWAY PLAN AND PROFILE SHEETS FOR ADDITIONAL INFORMATION.
4. REFERENCE CULVERT PLAN AND PROFILE SHEETS FOR ADDITIONAL INFORMATION.
5. REFERENCE DRIVEWAY DETAIL SHEETS FOR ADDITIONAL INFORMATION.
6. (GI) = GRATE INLET (DI) = DROP INLET
   (CI) = CURB INLET (MH) = MANHOLE
   (TR) = TOP OF RIM (TG) = TOP OF GRATE
   (TC) = TOP OF CURB
   (W/DB) = WITH DITCH BLOCK
7. GEOPAK DRAINAGE WAS USED FOR THE STORM SEWER DESIGN COMPUTATIONS.
8. HGL REFLECTS 10 YR DESIGN STORM.
9. REFER TO CROSS-SECTIONS FOR DITCH INFORMATION.

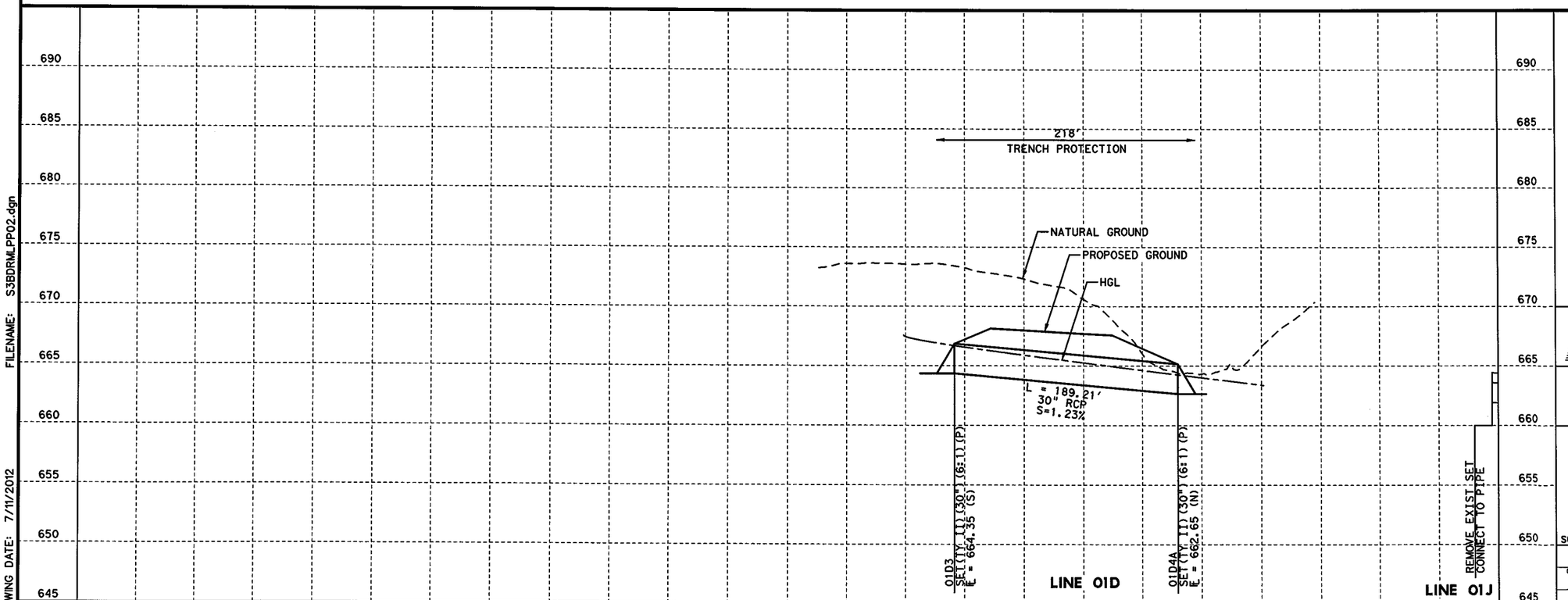

STATE OF TEXAS
SHAFEE YUSUF
94963
LICENSED
PROFESSIONAL ENGINEER
7/11/12

I. S. ENGINEERS, LLC
TBPE REG. # F-11657

Texas Department of Transportation
© 2012

IH 35W FROM NORTH TARRANT PKWY TO IH 820

DRAINAGE PLAN & PROFILE

IH 35W MANAGED LANES

BEGIN TO ℄ 35W ML STA 1418+00

SCALE: 1" = 100' H, 1" = 10' V — SHEET 1 OF 28

DESIGN	FED.RD. DIV.NO.	FEDERAL AID PROJECT NO.		HIGHWAY NO.
BV	6	(SEE TITLE SHEET)		IH 35W
GRAPHICS	STATE	DISTRICT	COUNTY	SHEET NO.
ZS	TEXAS	FTW	TARRANT	1205
CHECK	CONTROL	SECTION	JOB	
SY / MNM	0014	16	255, ETC.	

FILENAME: S3BDRML_PP02.dgn
DRAWING DATE: 7/11/2012

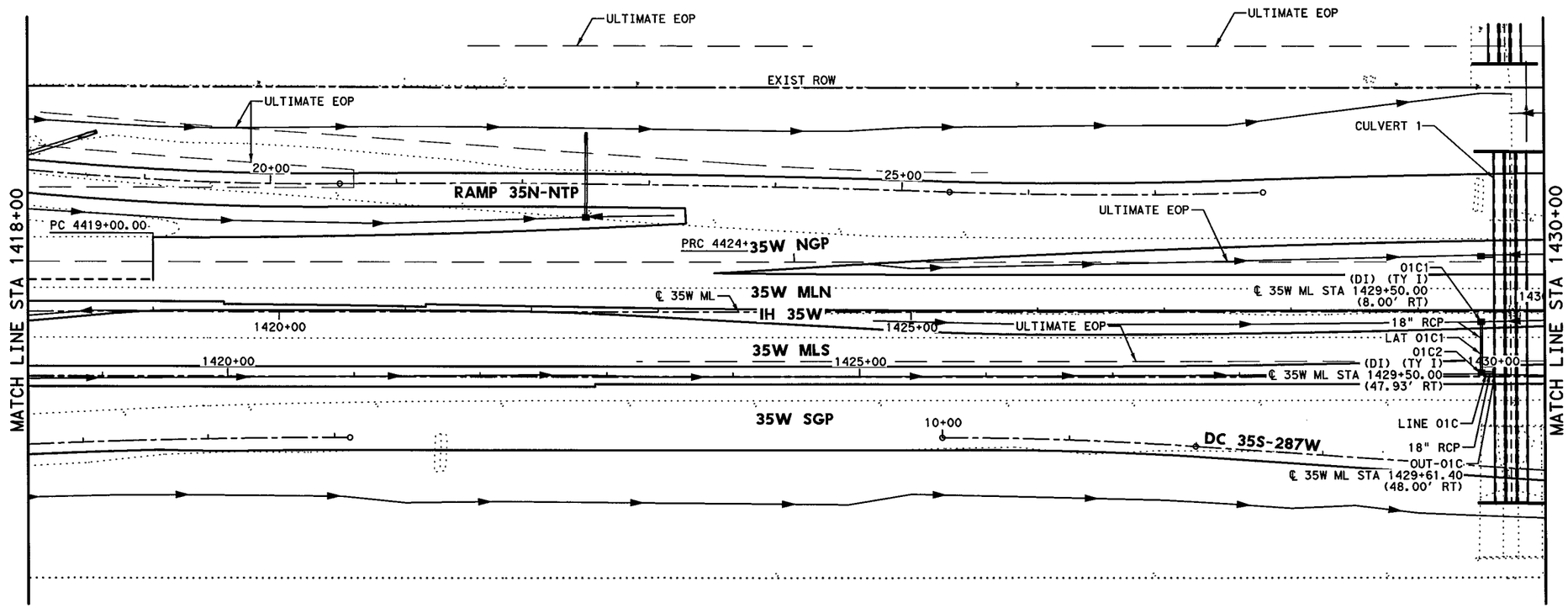

HORZ 0' 25' 50' 100'

SCALE IN FEET

GENERAL NOTES

1. ALL LOCATIONS FOR CURB INLETS ARE SHOWN TO THE FACE OF CURB.
2. ALL LOCATIONS FOR DITCH INLETS, GRATE INLETS, AND MANHOLES ARE SHOWN TO CENTER POINT (CP) OF INLET BOX OR MANHOLE BOX.
3. REFERENCE ROADWAY PLAN AND PROFILE SHEETS FOR ADDITIONAL INFORMATION.
4. REFERENCE CULVERT PLAN AND PROFILE SHEETS FOR ADDITIONAL INFORMATION.
5. REFERENCE DRIVEWAY DETAIL SHEETS FOR ADDITIONAL INFORMATION.
6. (GI) = GRATE INLET (DI) = DROP INLET
   (CI) = CURB INLET (MH) = MANHOLE
   (TR) = TOP OF RIM (TG) = TOP OF GRATE
   (TC) = TOP OF CURB
   (W/DB) = WITH DITCH BLOCK
7. GEOPAK DRAINAGE WAS USED FOR THE STORM SEWER DESIGN COMPUTATIONS.
8. HGL REFLECTS 10 YR DESIGN STORM.
9. REFER TO CROSS-SECTIONS FOR DITCH INFORMATION.

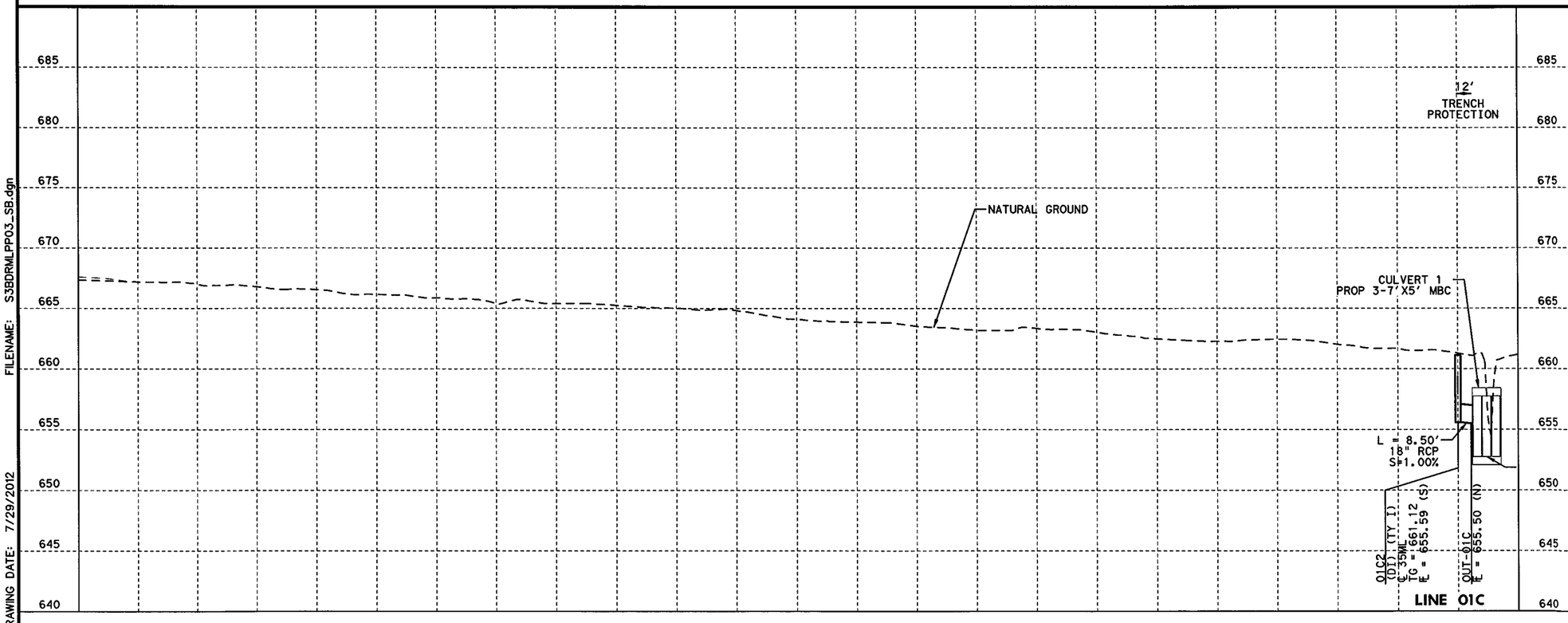

STATE OF TEXAS
SHAFEE YUSUF
94963
LICENSED
PROFESSIONAL ENGINEER
7/30/12

I. S. ENGINEERS, LLC
TBPE REG. # F-11657

Texas Department of Transportation
© 2012

IH 35W FROM NORTH TARRANT PKWY TO IH 820

DRAINAGE PLAN & PROFILE

IH 35W MANAGED LANES SB

STA 1418+00 TO STA 1430+00

SCALE: 1" = 100' H, 1" = 10' V — SHEET 2 OF 28

DESIGN	FED.RD. DIV.NO.	FEDERAL AID PROJECT NO.		HIGHWAY NO.
BV	6	(SEE TITLE SHEET)		IH 35W
GRAPHICS ZS	STATE	DISTRICT	COUNTY	SHEET NO.
CHECK SY	TEXAS	FTW	TARRANT	1206
CHECK MNM	CONTROL 0014	SECTION 16	JOB 255, ETC.	

FILENAME: S3BDRMLPP03_SB.dgn

DRAWING DATE: 7/29/2012

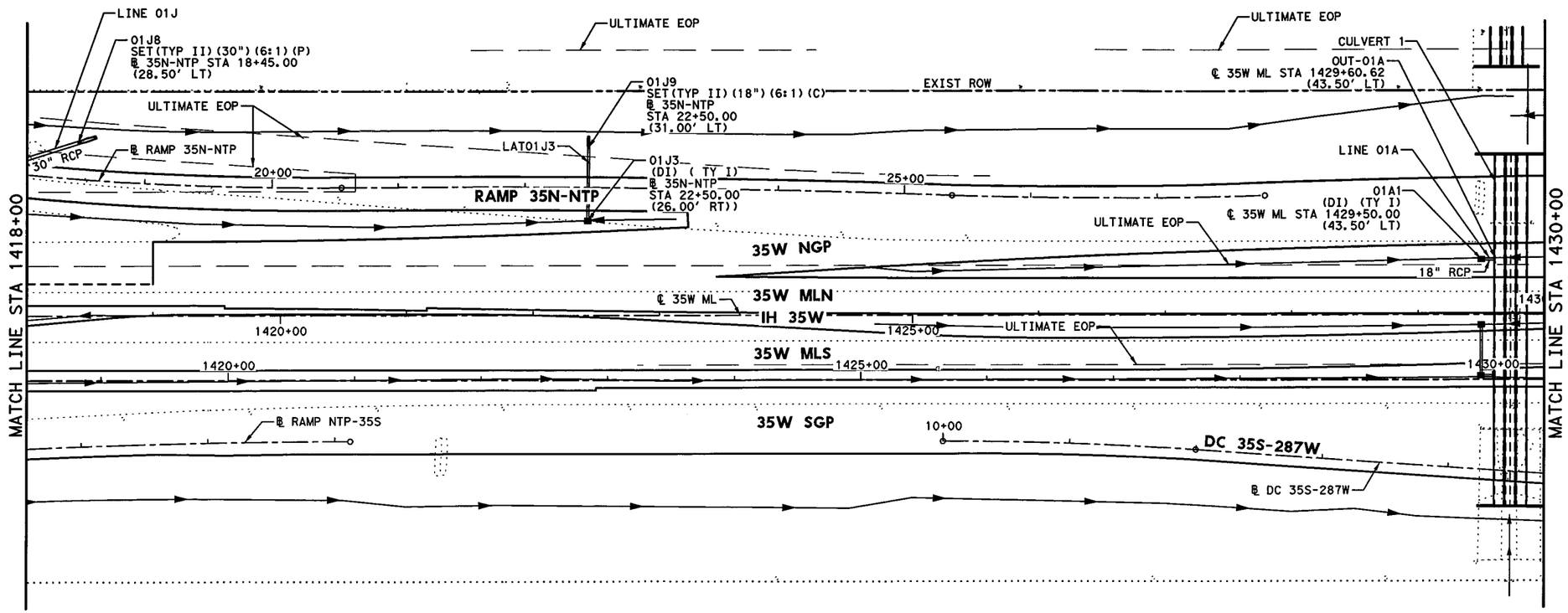

HORZ 0' 25' 50' 100'

SCALE IN FEET

GENERAL NOTES

1. ALL LOCATIONS FOR CURB INLETS ARE SHOWN TO THE FACE OF CURB.
2. ALL LOCATIONS FOR DITCH INLETS, GRATE INLETS, AND MANHOLES ARE SHOWN TO CENTER POINT (CP) OF INLET BOX OR MANHOLE BOX.
3. REFERENCE ROADWAY PLAN AND PROFILE SHEETS FOR ADDITIONAL INFORMATION.
4. REFERENCE CULVERT PLAN AND PROFILE SHEETS FOR ADDITIONAL INFORMATION.
5. REFERENCE DRIVEWAY DETAIL SHEETS FOR ADDITIONAL INFORMATION.
6. (GI) = GRATE INLET (DI) = DROP INLET
   (CI) = CURB INLET (MH) = MANHOLE
   (TR) = TOP OF RIM (TG) = TOP OF GRATE
   (TC) = TOP OF CURB
   (W/DB) = WITH DITCH BLOCK
7. GEOPAK DRAINAGE WAS USED FOR THE STORM SEWER DESIGN COMPUTATIONS.
8. HGL REFLECTS 10 YR DESIGN STORM.
9. REFER TO CROSS-SECTIONS FOR DITCH INFORMATION.

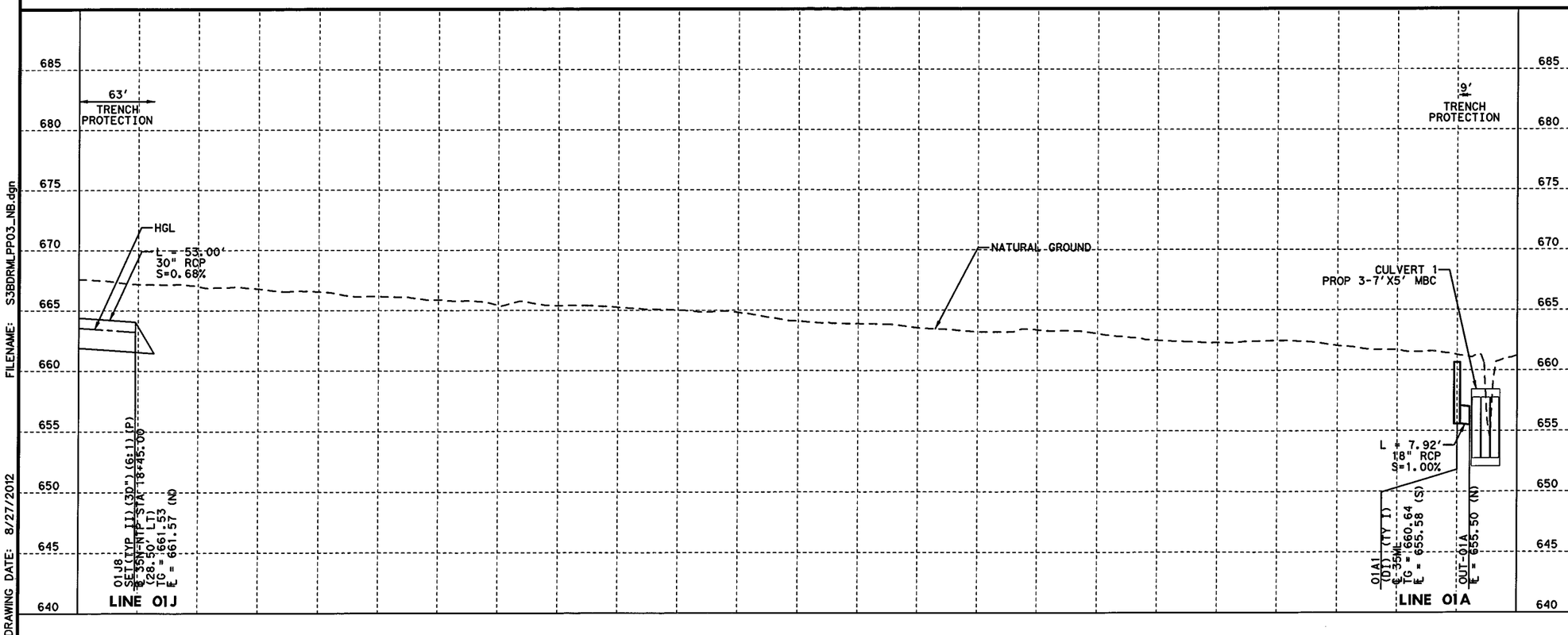

STATE OF TEXAS
SHAFEE YUSUF
94963
LICENSED
PROFESSIONAL ENGINEER
8/29/12

I. S. ENGINEERS, LLC
TBPE REG. # F-11657

Texas Department of Transportation
© 2012

IH 35W FROM NORTH TARRANT PKWY TO IH 820

DRAINAGE PLAN & PROFILE

IH 35W MANAGED LANES NB

STA 1418+00 TO STA 1430+00

SCALE: 1" = 100' H, 1" = 10' V

SHEET 3 OF 28

DESIGN	FED.RD. DIV.NO.	FEDERAL AID PROJECT NO.		HIGHWAY NO.
BV	6	(SEE TITLE SHEET)		IH 35W
GRAPHICS ZS	STATE	DISTRICT	COUNTY	SHEET NO.
CHECK SY	TEXAS	FTW	TARRANT	1207
CHECK MNM	CONTROL 0014	SECTION 16	JOB 255, ETC.	

FILENAME: S3BDRMLPP03_NB.dgn

DRAWING DATE: 8/27/2012

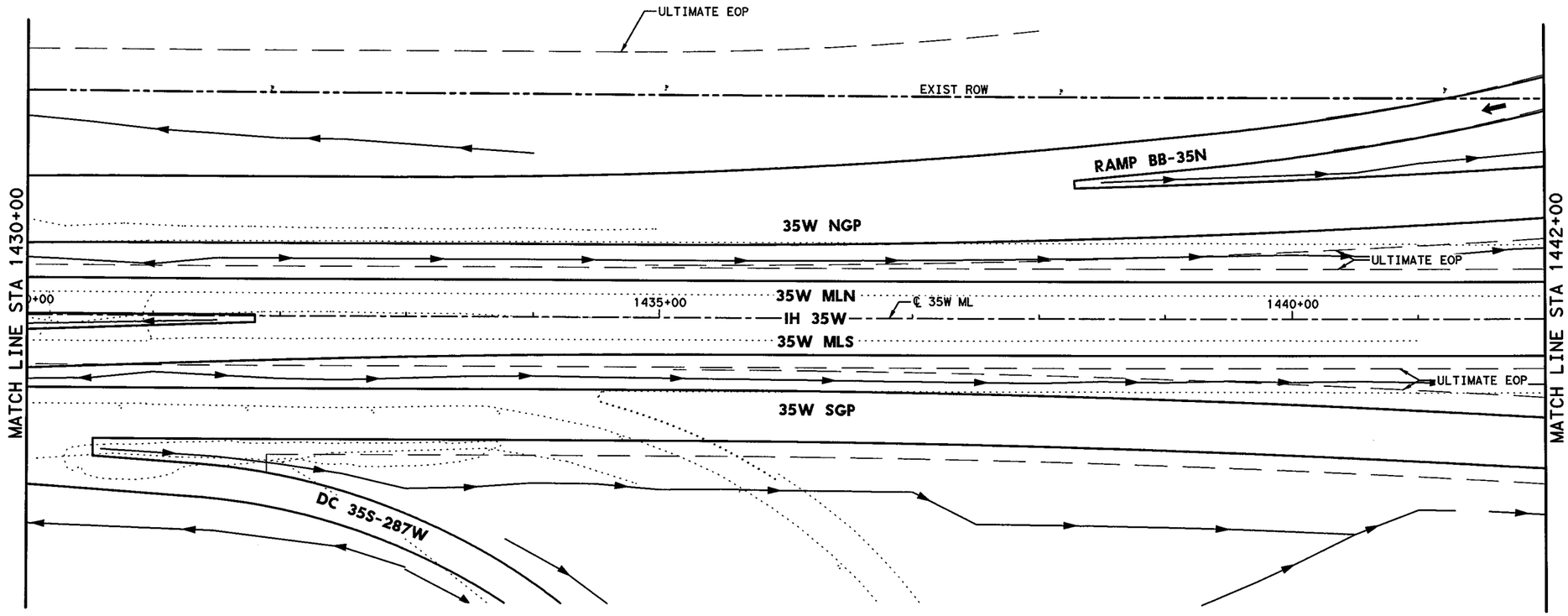

HORZ 0' 25' 50' 100'

SCALE IN FEET

GENERAL NOTES

1. ALL LOCATIONS FOR CURB INLETS ARE SHOWN TO THE FACE OF CURB.
2. ALL LOCATIONS FOR DITCH INLETS, GRATE INLETS, AND MANHOLES ARE SHOWN TO CENTER POINT (CP) OF INLET BOX OR MANHOLE BOX.
3. REFERENCE ROADWAY PLAN AND PROFILE SHEETS FOR ADDITIONAL INFORMATION.
4. REFERENCE CULVERT PLAN AND PROFILE SHEETS FOR ADDITIONAL INFORMATION.
5. REFERENCE DRIVEWAY DETAIL SHEETS FOR ADDITIONAL INFORMATION.
6. (GI) = GRATE INLET (DI) = DROP INLET
   (CI) = CURB INLET (MH) = MANHOLE
   (TR) = TOP OF RIM (TG) = TOP OF GRATE
   (TC) = TOP OF CURB
   (W/DB) = WITH DITCH BLOCK
7. GEOPAK DRAINAGE WAS USED FOR THE STORM SEWER DESIGN COMPUTATIONS.
8. HGL REFLECTS 10 YR DESIGN STORM.
9. REFER TO CROSS-SECTIONS FOR DITCH INFORMATION.

680 675 670 665 660 655 650 645 640 635

STATE OF TEXAS
SHAFEE YUSUF
94963
LICENSED
PROFESSIONAL ENGINEER
7/11/12

I. S. ENGINEERS, LLC
TBPE REG. # F-11657

Texas Department of Transportation
© 2012

IH 35W FROM NORTH TARRANT PKWY TO IH 820

DRAINAGE PLAN & PROFILE

IH 35W MANAGED LANES NB
STA 1430+00 TO STA 1442+00

SCALE: 1" = 100' H, 1" = 10' V — SHEET 4 OF 28

DESIGN	FED.RD. DIV.NO.	FEDERAL AID PROJECT NO.		HIGHWAY NO.
BV	6	(SEE TITLE SHEET)		IH 35W
GRAPHICS ZS	STATE	DISTRICT	COUNTY	SHEET NO.
CHECK SY	TEXAS	FTW	TARRANT	1208
CHECK MNM	CONTROL 0014	SECTION 16	JOB 255, ETC.	

FILENAME: S3BDRMLPP04.dgn

DRAWING DATE: 7/11/2012

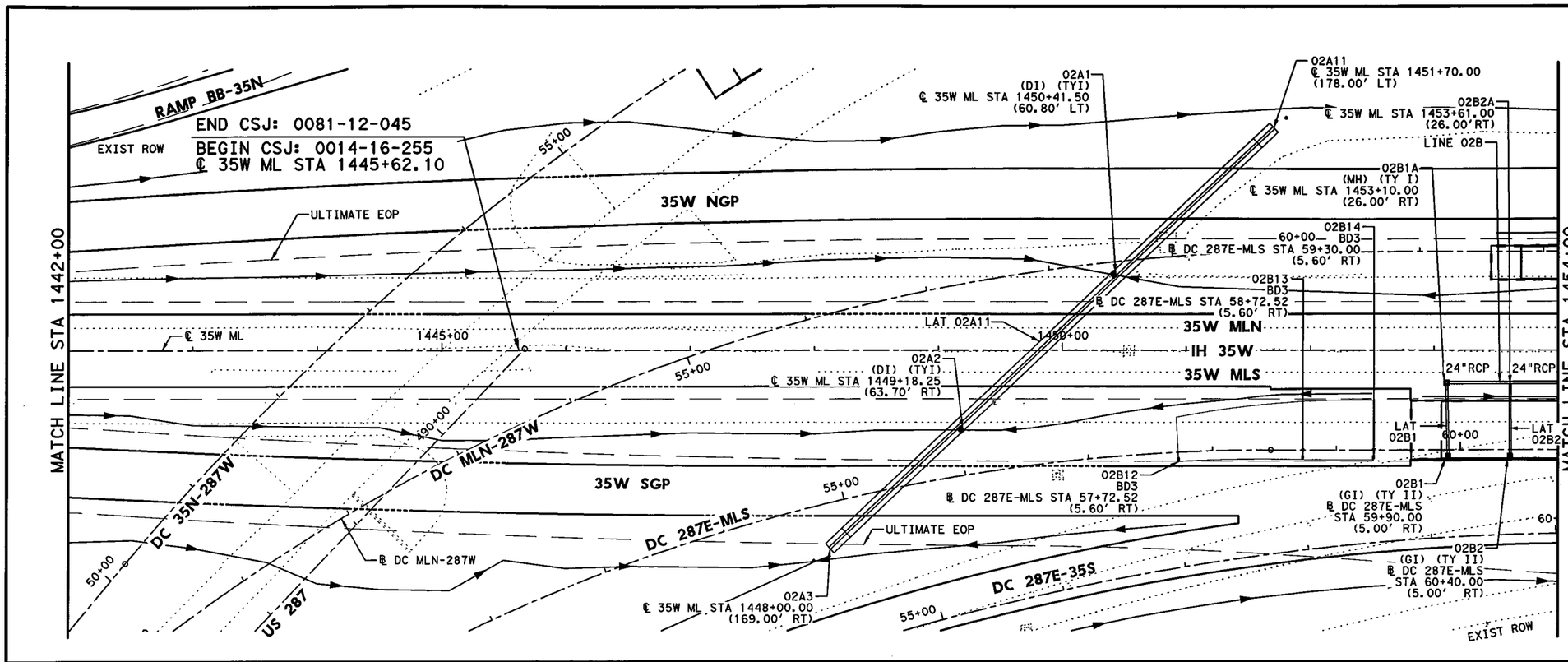

HORZ 0' 25' 50' 100'

SCALE IN FEET

GENERAL NOTES

1. ALL LOCATIONS FOR CURB INLETS ARE SHOWN TO THE FACE OF CURB.
2. ALL LOCATIONS FOR DITCH INLETS, GRATE INLETS, AND MANHOLES ARE SHOWN TO CENTER POINT (CP) OF INLET BOX OR MANHOLE BOX.
3. REFERENCE ROADWAY PLAN AND PROFILE SHEETS FOR ADDITIONAL INFORMATION.
4. REFERENCE CULVERT PLAN AND PROFILE SHEETS FOR ADDITIONAL INFORMATION.
5. REFERENCE DRIVEWAY DETAIL SHEETS FOR ADDITIONAL INFORMATION.
6. (GI) = GRATE INLET (DI) = DROP INLET
   (CI) = CURB INLET (MH) = MANHOLE
   (TR) = TOP OF RIM (TG) = TOP OF GRATE
   (TC) = TOP OF CURB
   (W/DB) = WITH DITCH BLOCK
7. GEOPAK DRAINAGE WAS USED FOR THE STORM SEWER DESIGN COMPUTATIONS.
8. HGL REFLECTS 10 YR DESIGN STORM.
9. REFER TO CROSS-SECTIONS FOR DITCH INFORMATION.

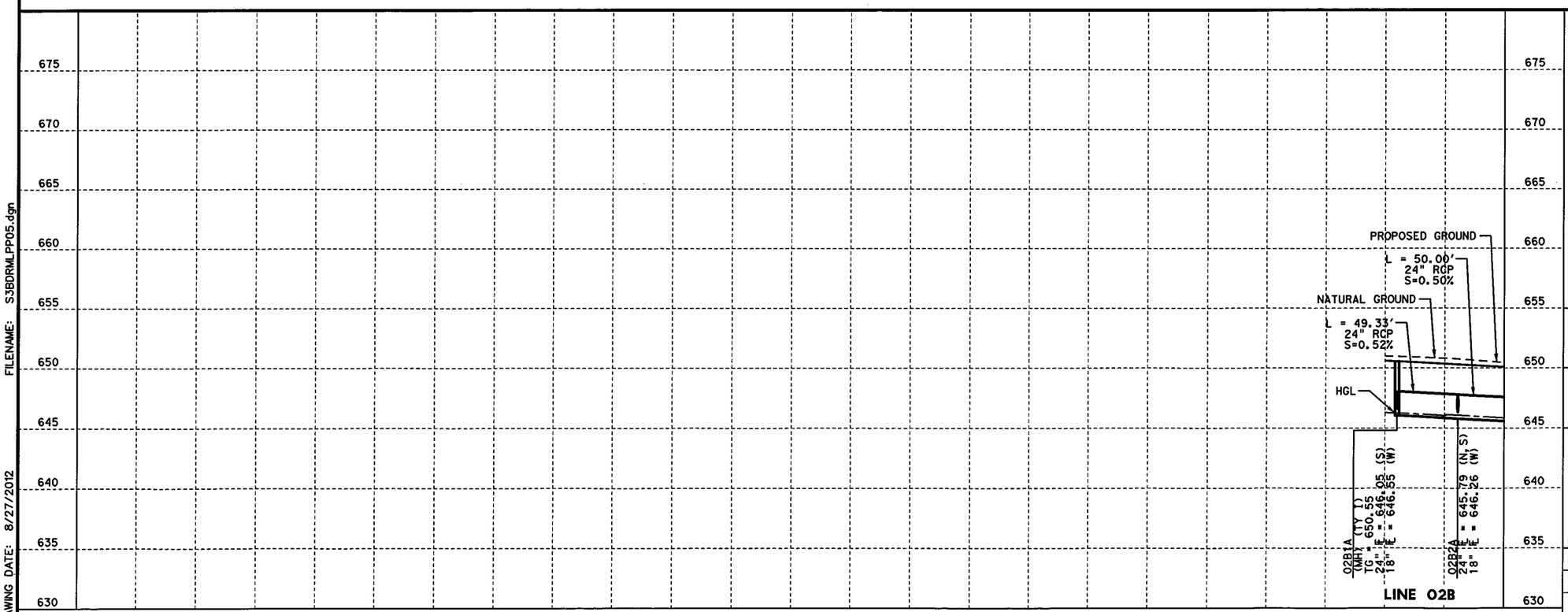

STATE OF TEXAS
SHAFEE YUSUF
94963
LICENSED
PROFESSIONAL ENGINEER

8/29/12

I. S. ENGINEERS, LLC
TBPE REG. # F-11657

Texas Department of Transportation
© 2012

IH 35W FROM NORTH TARRANT PKWY TO IH 820

DRAINAGE PLAN & PROFILE
IH 35W MANAGED LANES
STA 1442+00 TO STA 1454+00

SCALE: 1" = 100' H, 1" = 10' V — SHEET 5 OF 28

DESIGN	FED.RD. DIV.NO.	FEDERAL AID PROJECT NO.		HIGHWAY NO.
BV	6	(SEE TITLE SHEET)		IH 35W
GRAPHICS ZS	STATE	DISTRICT	COUNTY	SHEET NO.
CHECK SY	TEXAS	FTW	TARRANT	1209
CHECK MNM	CONTROL 0014	SECTION 16	JOB 255, ETC.	

FILENAME: S3BDRMLPP05.dgn
DRAWING DATE: 8/27/2012

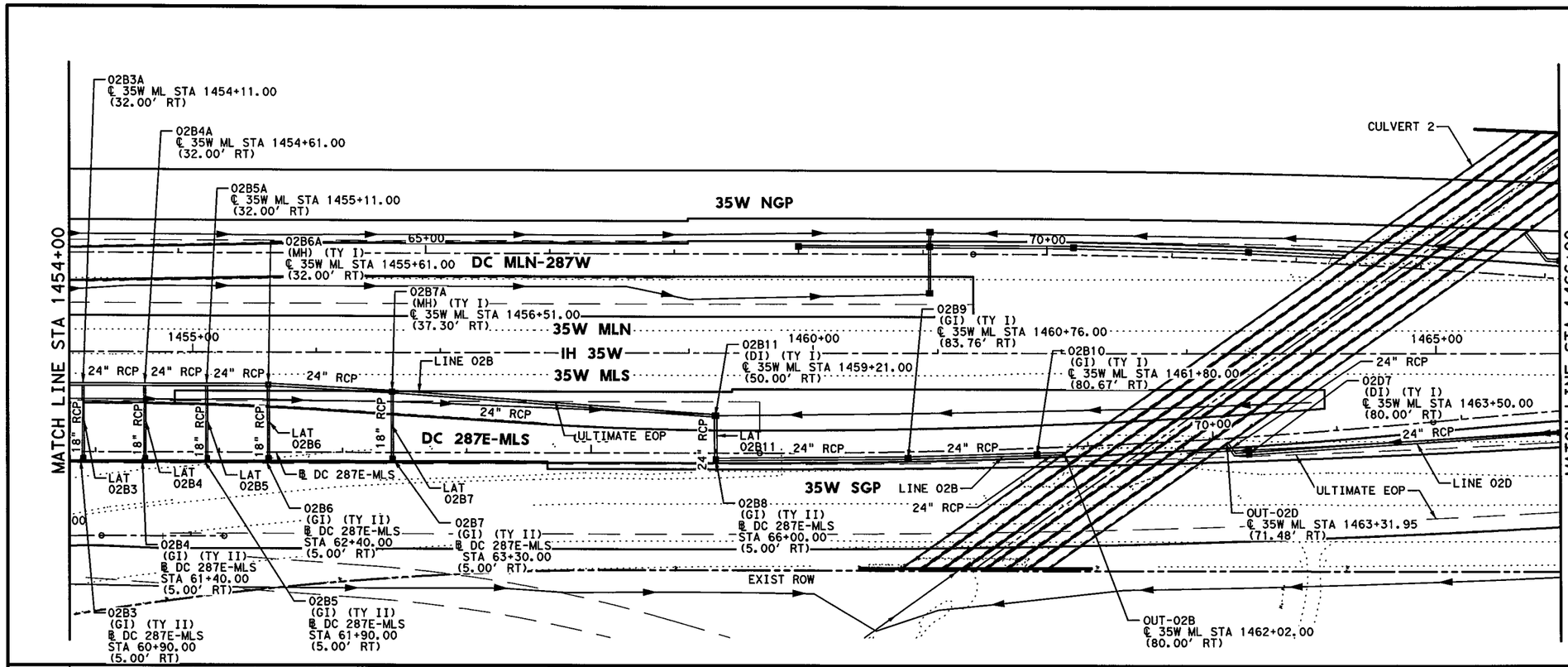

HORZ 0' 25' 50' 100'

SCALE IN FEET

GENERAL NOTES

1. ALL LOCATIONS FOR CURB INLETS ARE SHOWN TO THE FACE OF CURB.
2. ALL LOCATIONS FOR DITCH INLETS, GRATE INLETS, AND MANHOLES ARE SHOWN TO CENTER POINT (CP) OF INLET BOX OR MANHOLE BOX.
3. REFERENCE ROADWAY PLAN AND PROFILE SHEETS FOR ADDITIONAL INFORMATION.
4. REFERENCE CULVERT PLAN AND PROFILE SHEETS FOR ADDITIONAL INFORMATION.
5. REFERENCE DRIVEWAY DETAIL SHEETS FOR ADDITIONAL INFORMATION.
6. (GI) = GRATE INLET (DI) = DROP INLET
   (CI) = CURB INLET (MH) = MANHOLE
   (TR) = TOP OF RIM (TG) = TOP OF GRATE
   (TC) = TOP OF CURB
   (W/DB) = WITH DITCH BLOCK
7. GEOPAK DRAINAGE WAS USED FOR THE STORM SEWER DESIGN COMPUTATIONS.
8. HGL REFLECTS 10 YR DESIGN STORM.
9. REFER TO CROSS-SECTIONS FOR DITCH INFORMATION.

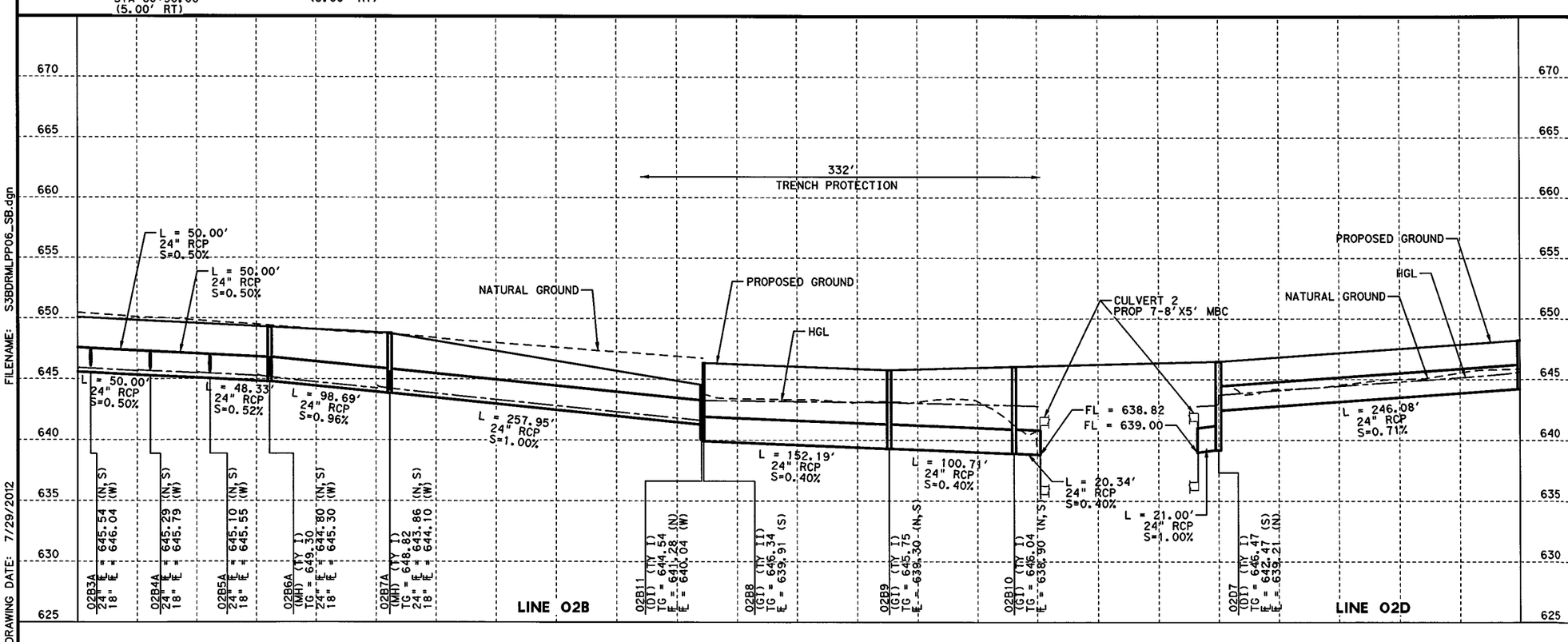

STATE OF TEXAS
SHAFEE YUSUF
94963
LICENSED
PROFESSIONAL ENGINEER

7/30/12

I. S. ENGINEERS, LLC

TBPE REG. # F-11657

Texas Department of Transportation

© 2012

IH 35W FROM NORTH TARRANT PKWY TO IH 820

DRAINAGE PLAN & PROFILE

IH 35W MANAGED LANES SB

STA 1454+00 TO STA 1466+00

SCALE: 1" = 100' H, 1" = 10' V

SHEET 6 OF 28

DESIGN	FED.RD. DIV.NO.	FEDERAL AID PROJECT NO.		HIGHWAY NO.
BV	6	(SEE TITLE SHEET)		IH 35W
GRAPHICS	STATE	DISTRICT	COUNTY	SHEET NO.
ZS	TEXAS	FTW	TARRANT	1210
CHECK	CONTROL	SECTION	JOB	
SY	0014	16	255, ETC.	
CHECK				
MNM				

FILENAME: S3BDRMLPP06_SB.dgn

DRAWING DATE: 7/29/2012

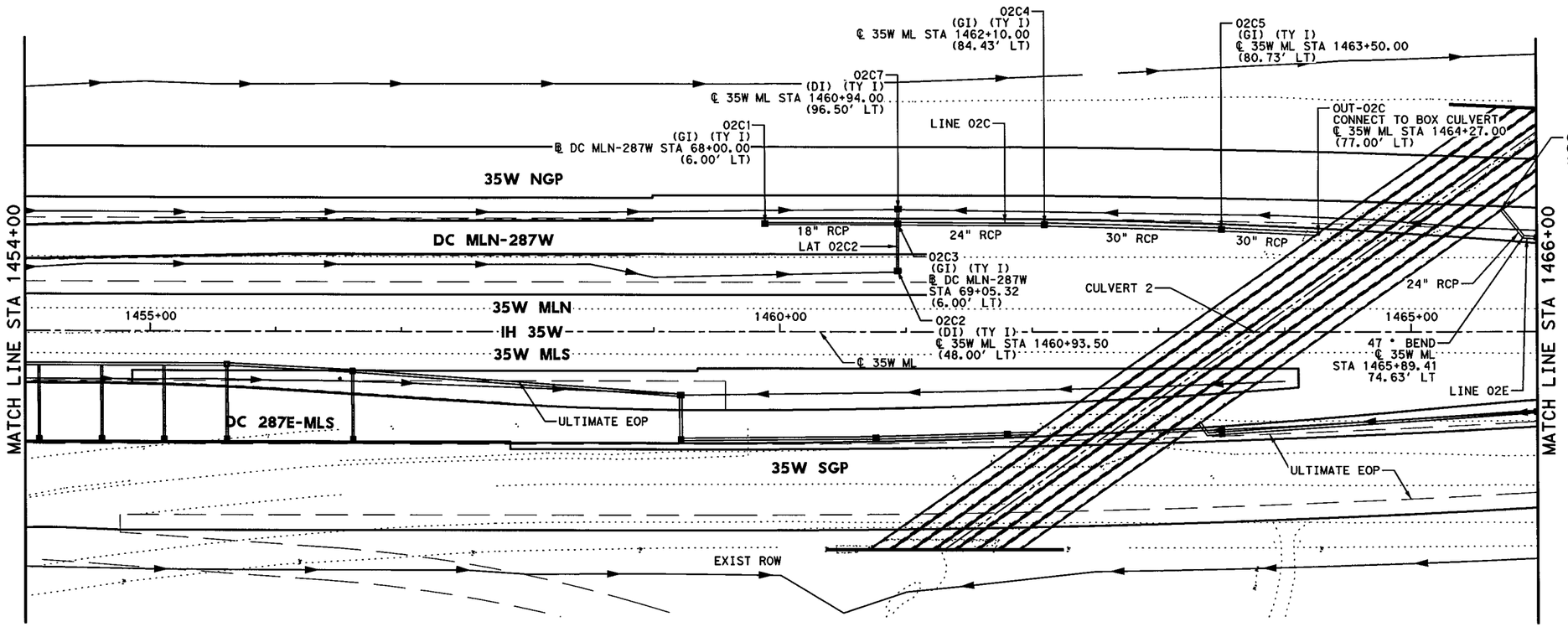

HORZ 0' 25' 50' 100'

SCALE IN FEET

GENERAL NOTES

1. ALL LOCATIONS FOR CURB INLETS ARE SHOWN TO THE FACE OF CURB.
2. ALL LOCATIONS FOR DITCH INLETS, GRATE INLETS, AND MANHOLES ARE SHOWN TO CENTER POINT (CP) OF INLET BOX OR MANHOLE BOX.
3. REFERENCE ROADWAY PLAN AND PROFILE SHEETS FOR ADDITIONAL INFORMATION.
4. REFERENCE CULVERT PLAN AND PROFILE SHEETS FOR ADDITIONAL INFORMATION.
5. REFERENCE DRIVEWAY DETAIL SHEETS FOR ADDITIONAL INFORMATION.
6. (GI) = GRATE INLET (DI) = DROP INLET
   (CI) = CURB INLET (MH) = MANHOLE
   (TR) = TOP OF RIM (TG) = TOP OF GRATE
   (TC) = TOP OF CURB
   (W/DB) = WITH DITCH BLOCK
7. GEOPAK DRAINAGE WAS USED FOR THE STORM SEWER DESIGN COMPUTATIONS.
8. HGL REFLECTS 10 YR DESIGN STORM.
9. REFER TO CROSS-SECTIONS FOR DITCH INFORMATION.

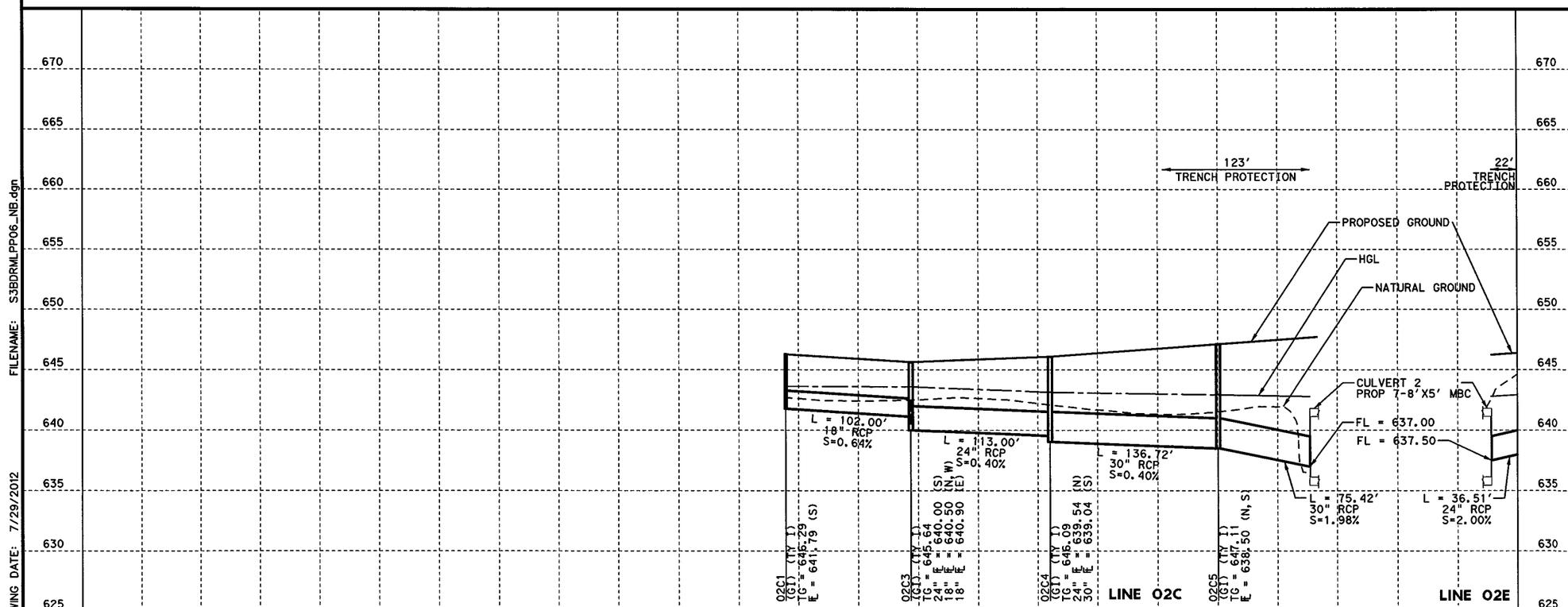

STATE OF TEXAS
SHAFEE YUSUF
94963
LICENSED
PROFESSIONAL ENGINEER
7/30/12

I. S. ENGINEERS, LLC
TBPE REG. # F-11657

Texas Department of Transportation
© 2012

IH 35W FROM NORTH TARRANT PKWY TO IH 820

DRAINAGE PLAN & PROFILE

IH 35W MANAGED LANES NB

STA 1454+00 TO STA 1466+00

SCALE: 1" = 100' H, 1" = 10' V — SHEET 7 OF 28

DESIGN	FED.RD. DIV.NO.	FEDERAL AID PROJECT NO.		HIGHWAY NO.
BV	6	(SEE TITLE SHEET)		IH 35W
GRAPHICS ZS	STATE	DISTRICT	COUNTY	SHEET NO.
CHECK SY	TEXAS	FTW	TARRANT	1211
CHECK MNM	CONTROL 0014	SECTION 16	JOB 255, ETC.	

FILENAME: S3BDRMLPP06_NB.dgn

DRAWING DATE: 7/29/2012

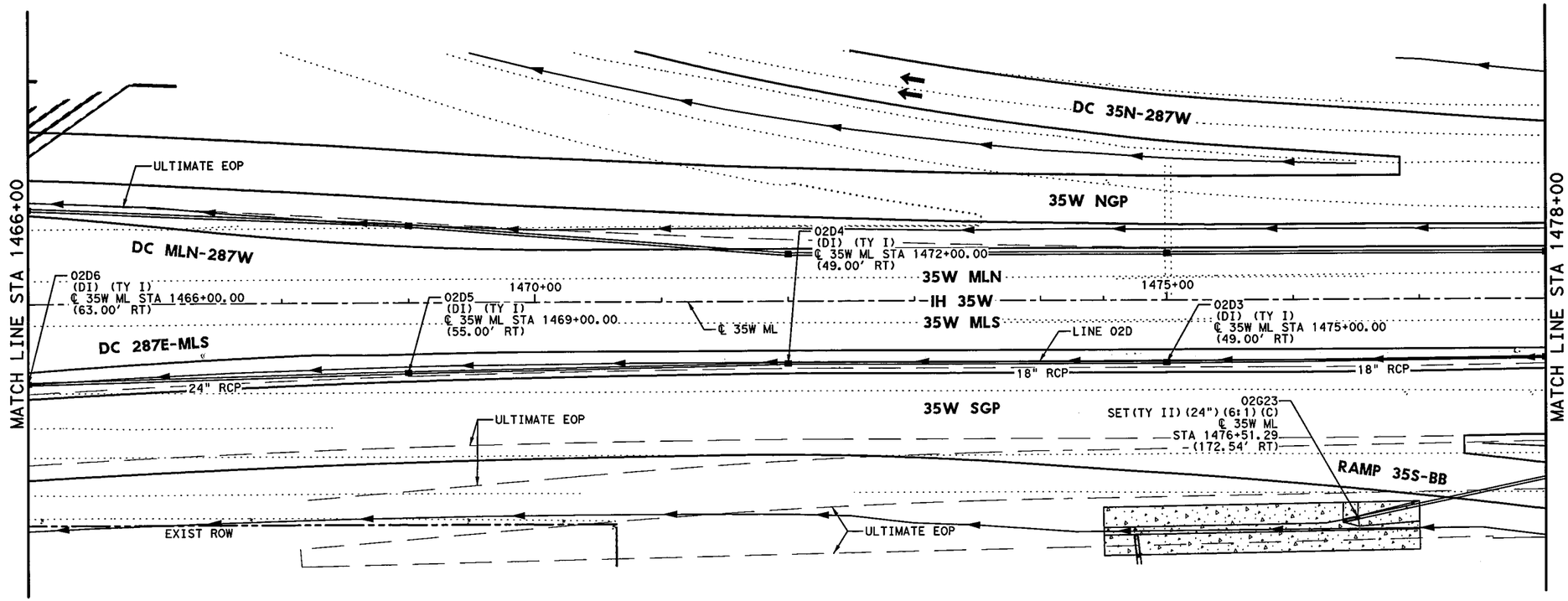

HORZ 0' 25' 50' 100'

SCALE IN FEET

GENERAL NOTES

1. ALL LOCATIONS FOR CURB INLETS ARE SHOWN TO THE FACE OF CURB.
2. ALL LOCATIONS FOR DITCH INLETS, GRATE INLETS, AND MANHOLES ARE SHOWN TO CENTER POINT (CP) OF INLET BOX OR MANHOLE BOX.
3. REFERENCE ROADWAY PLAN AND PROFILE SHEETS FOR ADDITIONAL INFORMATION.
4. REFERENCE CULVERT PLAN AND PROFILE SHEETS FOR ADDITIONAL INFORMATION.
5. REFERENCE DRIVEWAY DETAIL SHEETS FOR ADDITIONAL INFORMATION.
6. (GI) = GRATE INLET (DI) = DROP INLET
   (CI) = CURB INLET (MH) = MANHOLE
   (TR) = TOP OF RIM (TG) = TOP OF GRATE
   (TC) = TOP OF CURB
   (W/DB) = WITH DITCH BLOCK
7. GEOPAK DRAINAGE WAS USED FOR THE STORM SEWER DESIGN COMPUTATIONS.
8. HGL REFLECTS 10 YR DESIGN STORM.
9. REFER TO CROSS-SECTIONS FOR DITCH INFORMATION.

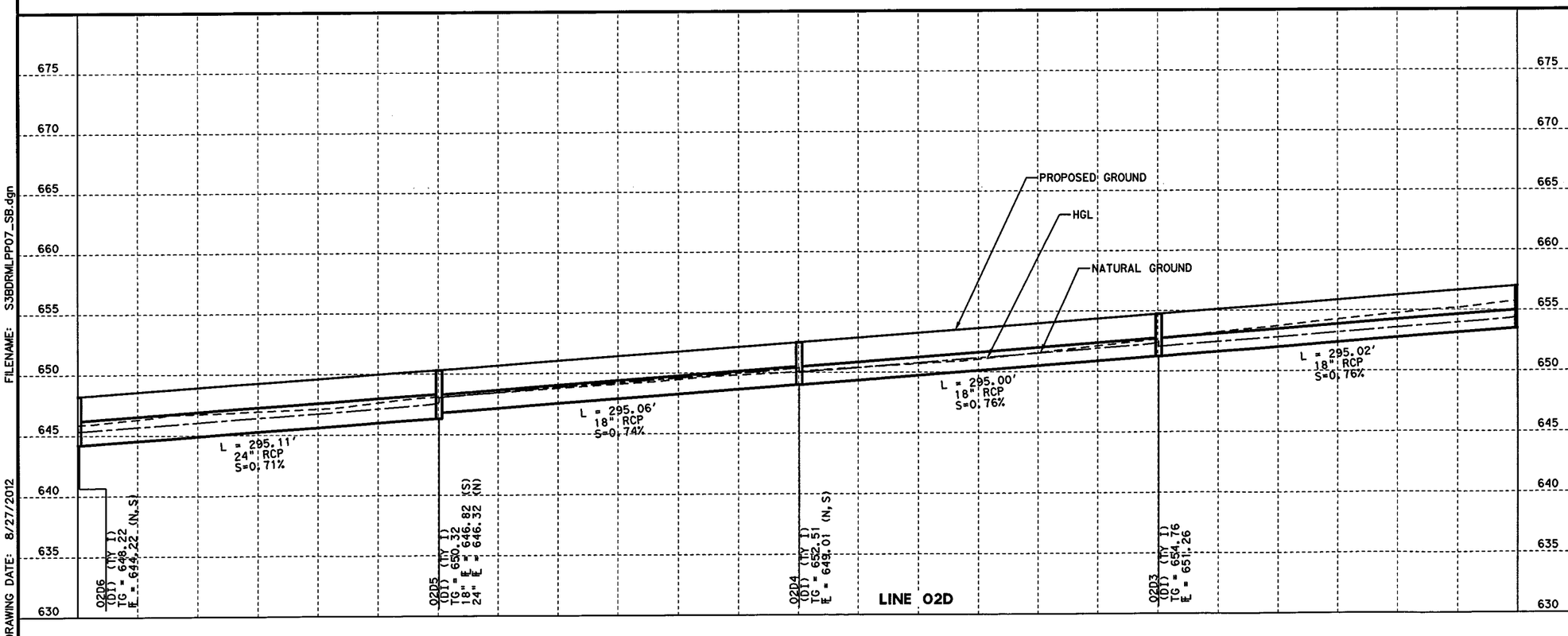

FILENAME: S3BDRMLPP07_SB.dgn

DRAWING DATE: 8/27/2012

STATE OF TEXAS
SHAFEE YUSUF
94963
LICENSED
PROFESSIONAL ENGINEER

8/29/12

I. S. ENGINEERS, LLC

TBPE REG. # F-11657

Texas Department of Transportation

© 2012

IH 35W FROM NORTH TARRANT PKWY TO IH 820

DRAINAGE PLAN & PROFILE

IH 35W MANAGED LANES SB

STA 1466+00 TO STA 1478+00

SCALE: 1" = 100' H, 1" = 10' V

SHEET 8 OF 28

DESIGN	FED.RD. DIV.NO.	FEDERAL AID PROJECT NO.		HIGHWAY NO.
BV	6	(SEE TITLE SHEET)		IH 35W
GRAPHICS	STATE	DISTRICT	COUNTY	SHEET NO.
ZS	TEXAS	FTW	TARRANT	
CHECK	CONTROL	SECTION	JOB	
SY				1212
CHECK	0014	16	255, ETC.	
MNM				

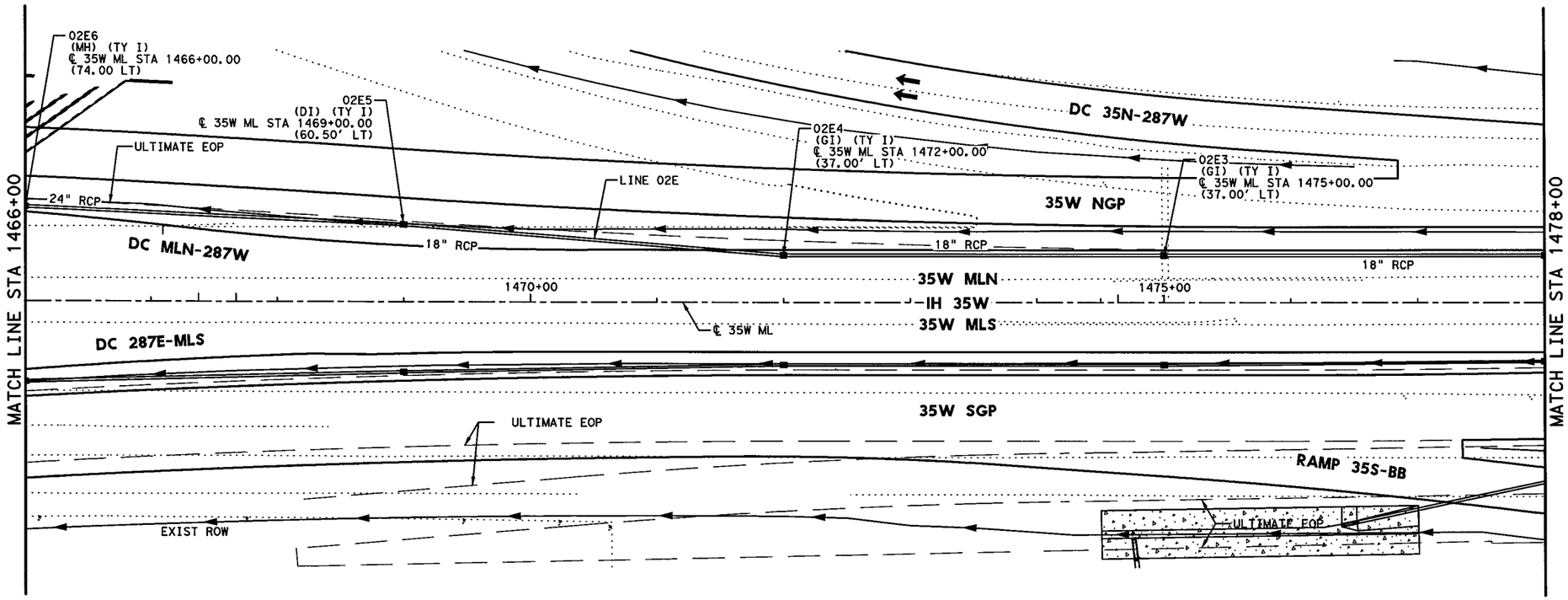

HORZ 0' 25' 50' 100'

SCALE IN FEET

GENERAL NOTES

1. ALL LOCATIONS FOR CURB INLETS ARE SHOWN TO THE FACE OF CURB.
2. ALL LOCATIONS FOR DITCH INLETS, GRATE INLETS, AND MANHOLES ARE SHOWN TO CENTER POINT (CP) OF INLET BOX OR MANHOLE BOX.
3. REFERENCE ROADWAY PLAN AND PROFILE SHEETS FOR ADDITIONAL INFORMATION.
4. REFERENCE CULVERT PLAN AND PROFILE SHEETS FOR ADDITIONAL INFORMATION.
5. REFERENCE DRIVEWAY DETAIL SHEETS FOR ADDITIONAL INFORMATION.
6. (GI) = GRATE INLET (DI) = DROP INLET
   (CI) = CURB INLET (MH) = MANHOLE
   (TR) = TOP OF RIM (TG) = TOP OF GRATE
   (TC) = TOP OF CURB
   (W/DB) = WITH DITCH BLOCK
7. GEOPAK DRAINAGE WAS USED FOR THE STORM SEWER DESIGN COMPUTATIONS.
8. HGL REFLECTS 10 YR DESIGN STORM.
9. REFER TO CROSS-SECTIONS FOR DITCH INFORMATION.

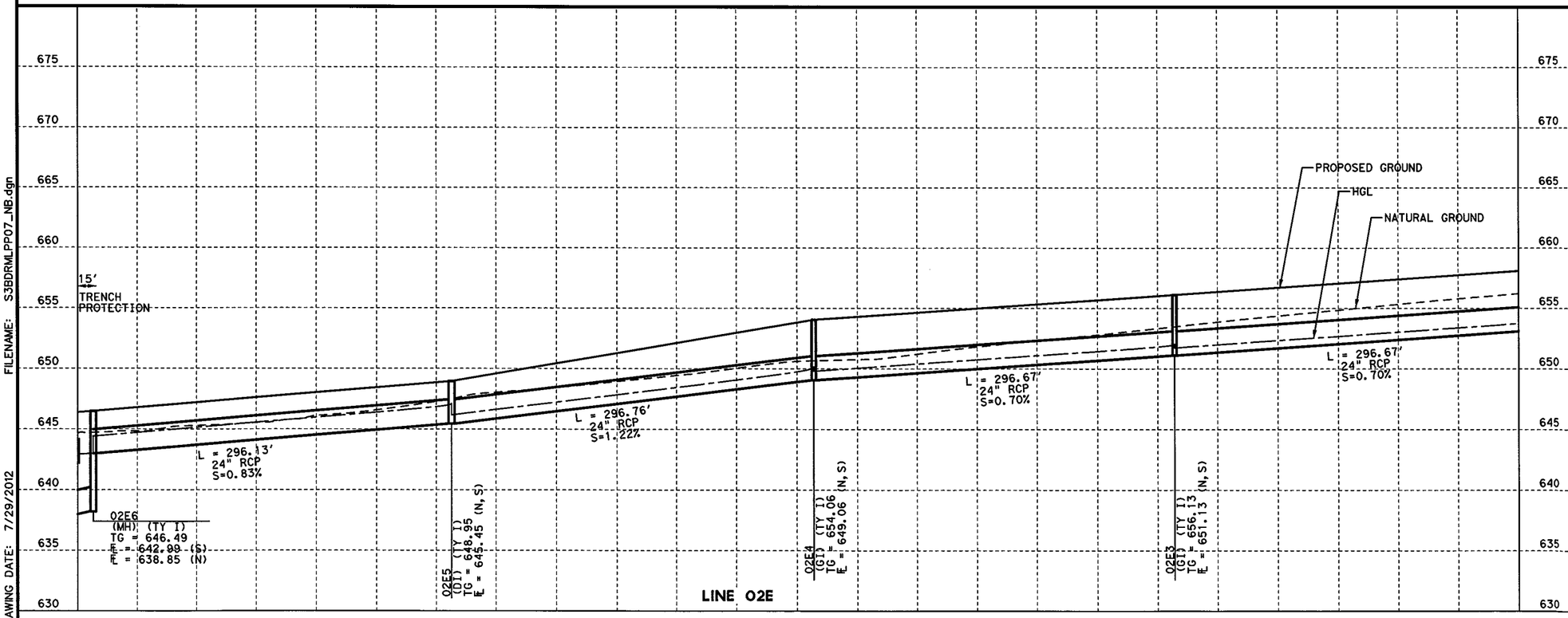

STATE OF TEXAS
SHAFEE YUSUF
94963
LICENSED
PROFESSIONAL ENGINEER
7/30/12

I. S. ENGINEERS, LLC
TBPE REG. # F-11657

Texas Department of Transportation
© 2012

IH 35W FROM NORTH TARRANT PKWY TO IH 820

DRAINAGE PLAN & PROFILE

IH 35W MANAGED LANES NB

STA 1466+00 TO STA 1478+00

SCALE: 1" = 100' H, 1" = 10' V

SHEET 9 OF 28

DESIGN	FED.RD. DIV.NO.	FEDERAL AID PROJECT NO.		HIGHWAY NO.
BV	6	(SEE TITLE SHEET)		IH 35W
GRAPHICS ZS	STATE	DISTRICT	COUNTY	SHEET NO.
CHECK SY	TEXAS	FTW	TARRANT	1213
CHECK MNM	CONTROL 0014	SECTION 16	JOB 255, ETC.	

FILENAME: S3BDRMLPP07_NB.dgn

DRAWING DATE: 7/29/2012

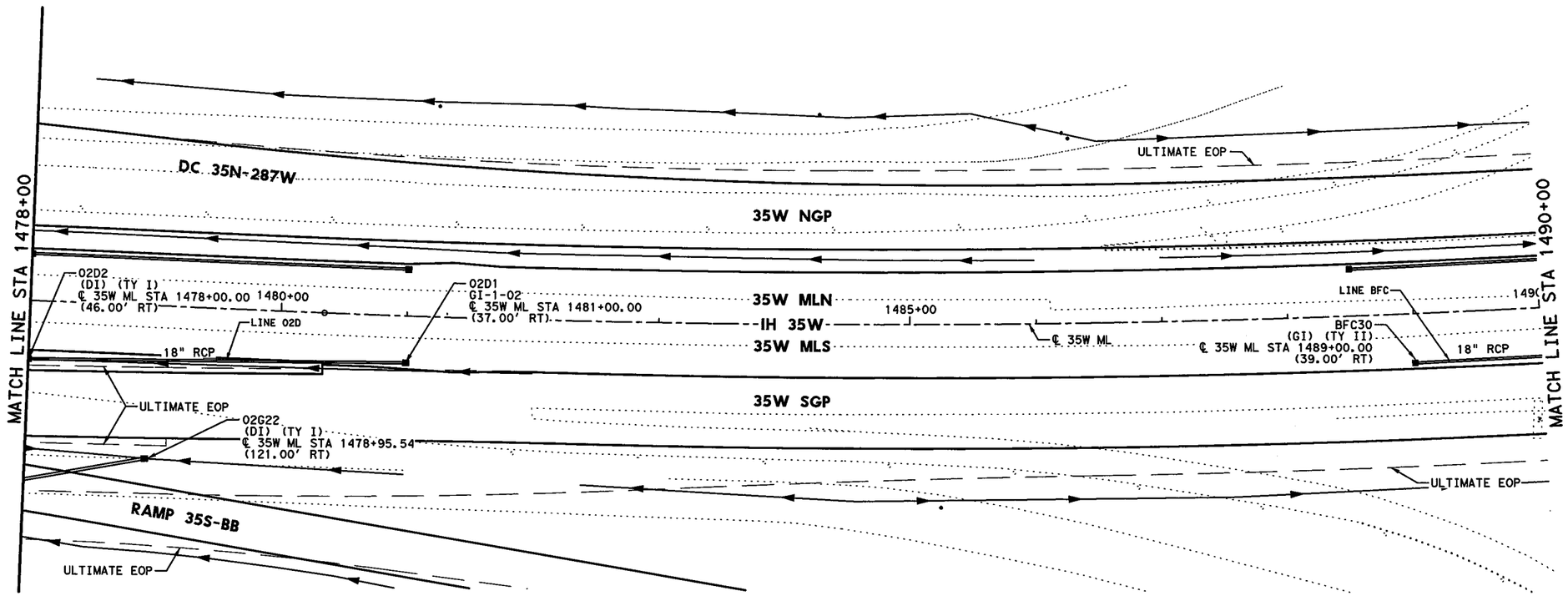

HORZ 0' 25' 50' 100'

SCALE IN FEET

GENERAL NOTES

1. ALL LOCATIONS FOR CURB INLETS ARE SHOWN TO THE FACE OF CURB.
2. ALL LOCATIONS FOR DITCH INLETS, GRATE INLETS, AND MANHOLES ARE SHOWN TO CENTER POINT (CP) OF INLET BOX OR MANHOLE BOX.
3. REFERENCE ROADWAY PLAN AND PROFILE SHEETS FOR ADDITIONAL INFORMATION.
4. REFERENCE CULVERT PLAN AND PROFILE SHEETS FOR ADDITIONAL INFORMATION.
5. REFERENCE DRIVEWAY DETAIL SHEETS FOR ADDITIONAL INFORMATION.
6. (GI) = GRATE INLET (DI) = DROP INLET
   (CI) = CURB INLET (MH) = MANHOLE
   (TR) = TOP OF RIM (TG) = TOP OF GRATE
   (TC) = TOP OF CURB
   (W/DB) = WITH DITCH BLOCK
7. GEOPAK DRAINAGE WAS USED FOR THE STORM SEWER DESIGN COMPUTATIONS.
8. HGL REFLECTS 10 YR DESIGN STORM.
9. REFER TO CROSS-SECTIONS FOR DITCH INFORMATION.

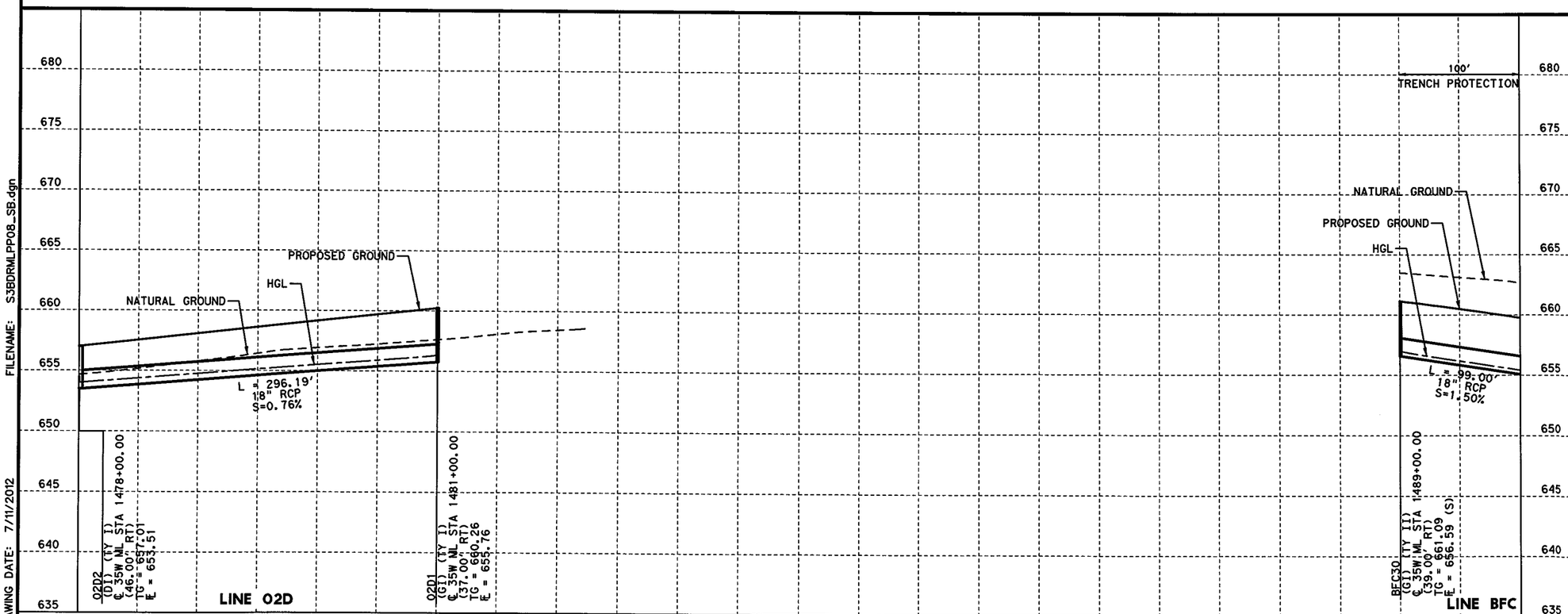

STATE OF TEXAS
SHAFEE YUSUF
94963
LICENSED
PROFESSIONAL ENGINEER

7/11/12

I. S. ENGINEERS, LLC

TBPE REG. # F-11657

Texas Department of Transportation
© 2012

IH 35W FROM NORTH TARRANT PKWY TO IH 820

DRAINAGE PLAN & PROFILE

IH 35W MANAGED LANES SB

STA 1478+00 TO STA 1490+00

SCALE: 1" = 100' H, 1" = 10' V

SHEET 10 OF 28

DESIGN	FED.RD. DIV.NO.	FEDERAL AID PROJECT NO.		HIGHWAY NO.
BV	6	(SEE TITLE SHEET)		IH 35W
GRAPHICS	STATE	DISTRICT	COUNTY	SHEET NO.
ZS	TEXAS	FTW	TARRANT	1214
CHECK	CONTROL	SECTION	JOB	
SY	0014	16	255, ETC.	
CHECK				
MNM				

FILENAME: S3BDRMLPP08_SB.dgn

DRAWING DATE: 7/11/2012

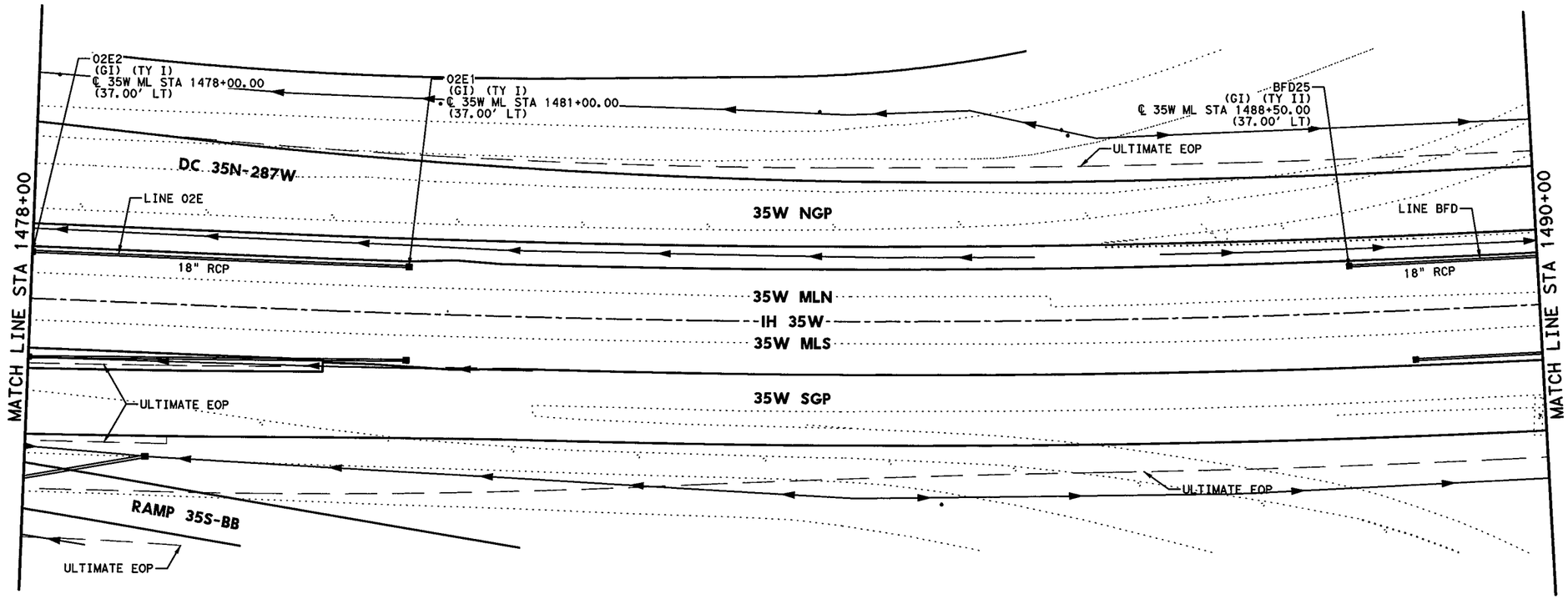

HORZ 0' 25' 50' 100'

SCALE IN FEET

GENERAL NOTES

1. ALL LOCATIONS FOR CURB INLETS ARE SHOWN TO THE FACE OF CURB.
2. ALL LOCATIONS FOR DITCH INLETS, GRATE INLETS, AND MANHOLES ARE SHOWN TO CENTER POINT (CP) OF INLET BOX OR MANHOLE BOX.
3. REFERENCE ROADWAY PLAN AND PROFILE SHEETS FOR ADDITIONAL INFORMATION.
4. REFERENCE CULVERT PLAN AND PROFILE SHEETS FOR ADDITIONAL INFORMATION.
5. REFERENCE DRIVEWAY DETAIL SHEETS FOR ADDITIONAL INFORMATION.
6. (GI) = GRATE INLET (DI) = DROP INLET
   (CI) = CURB INLET (MH) = MANHOLE
   (TR) = TOP OF RIM (TG) = TOP OF GRATE
   (TC) = TOP OF CURB
   (W/DB) = WITH DITCH BLOCK
7. GEOPAK DRAINAGE WAS USED FOR THE STORM SEWER DESIGN COMPUTATIONS.
8. HGL REFLECTS 10 YR DESIGN STORM.
9. REFER TO CROSS-SECTIONS FOR DITCH INFORMATION.

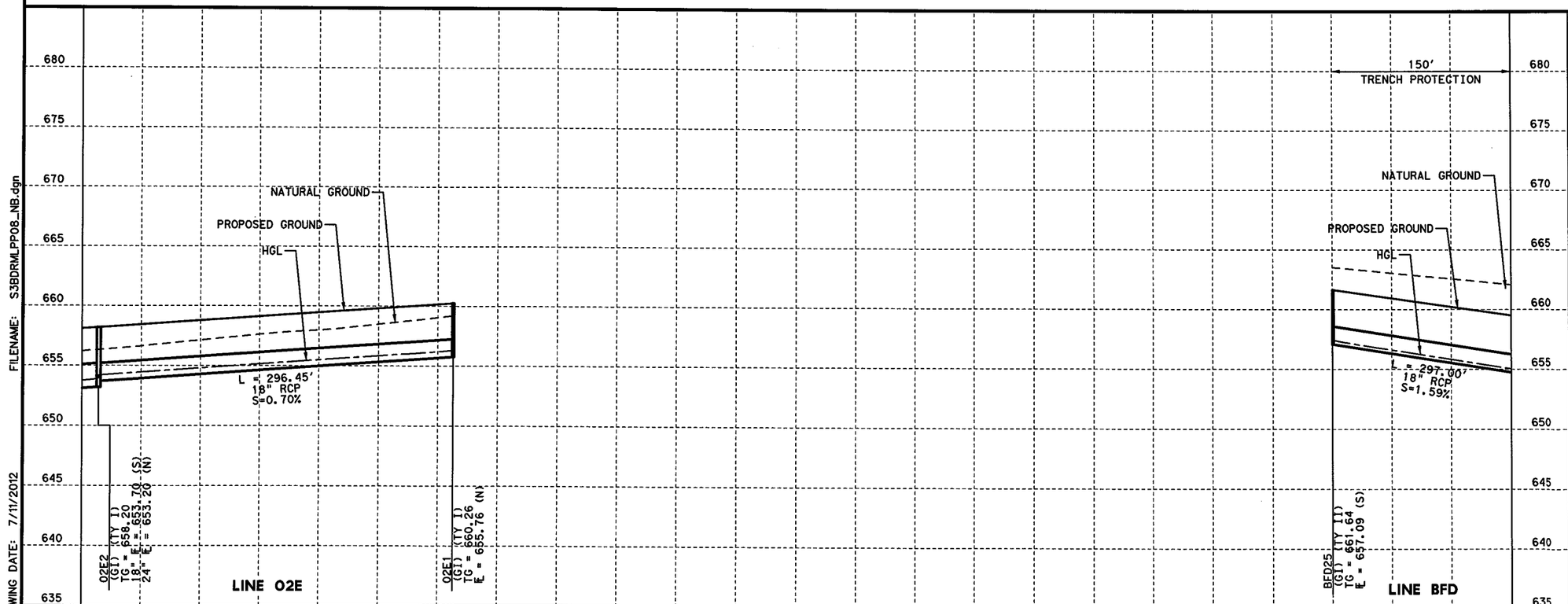

STATE OF TEXAS
SHAFEE YUSUF
94963
LICENSED PROFESSIONAL ENGINEER

7/11/12

I. S. ENGINEERS, LLC

TBPE REG. # F-11657

Texas Department of Transportation

© 2012

IH 35W FROM NORTH TARRANT PKWY TO IH 820

DRAINAGE PLAN & PROFILE

IH 35W MANAGED LANES NB

STA 1478+00 TO STA 1490+00

SCALE: 1" = 100' H, 1" = 10' V

SHEET 11 OF 28

DESIGN	FED.RD. DIV.NO.	FEDERAL AID PROJECT NO.		HIGHWAY NO.
BV	6	(SEE TITLE SHEET)		IH 35W
GRAPHICS	STATE	DISTRICT	COUNTY	SHEET NO.
ZS	TEXAS	FTW	TARRANT	
CHECK	CONTROL	SECTION	JOB	
SY				1215
CHECK	0014	16	255, ETC.	
MNM				

FILENAME: S3BDRMLPP08_NB.dgn

DRAWING DATE: 7/11/2012

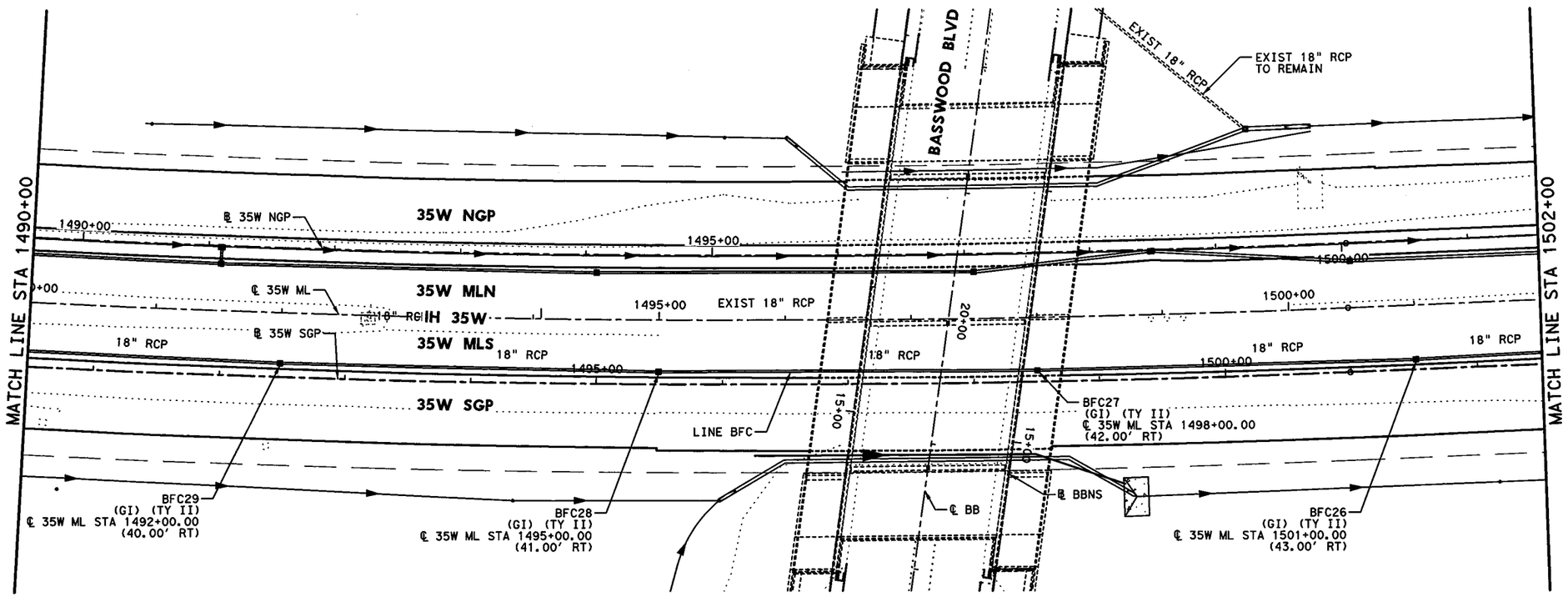

HORZ 0' 25' 50' 100'

SCALE IN FEET

GENERAL NOTES

1. ALL LOCATIONS FOR CURB INLETS ARE SHOWN TO THE FACE OF CURB.
2. ALL LOCATIONS FOR DITCH INLETS, GRATE INLETS, AND MANHOLES ARE SHOWN TO CENTER POINT (CP) OF INLET BOX OR MANHOLE BOX.
3. REFERENCE ROADWAY PLAN AND PROFILE SHEETS FOR ADDITIONAL INFORMATION.
4. REFERENCE CULVERT PLAN AND PROFILE SHEETS FOR ADDITIONAL INFORMATION.
5. REFERENCE DRIVEWAY DETAIL SHEETS FOR ADDITIONAL INFORMATION.
6. (GI) = GRATE INLET (DI) = DROP INLET
   (CI) = CURB INLET (MH) = MANHOLE
   (TR) = TOP OF RIM (TG) = TOP OF GRATE
   (TC) = TOP OF CURB
   (W/DB) = WITH DITCH BLOCK
7. GEOPAK DRAINAGE WAS USED FOR THE STORM SEWER DESIGN COMPUTATIONS.
8. HGL REFLECTS 10 YR DESIGN STORM.
9. REFER TO CROSS-SECTIONS FOR DITCH INFORMATION.

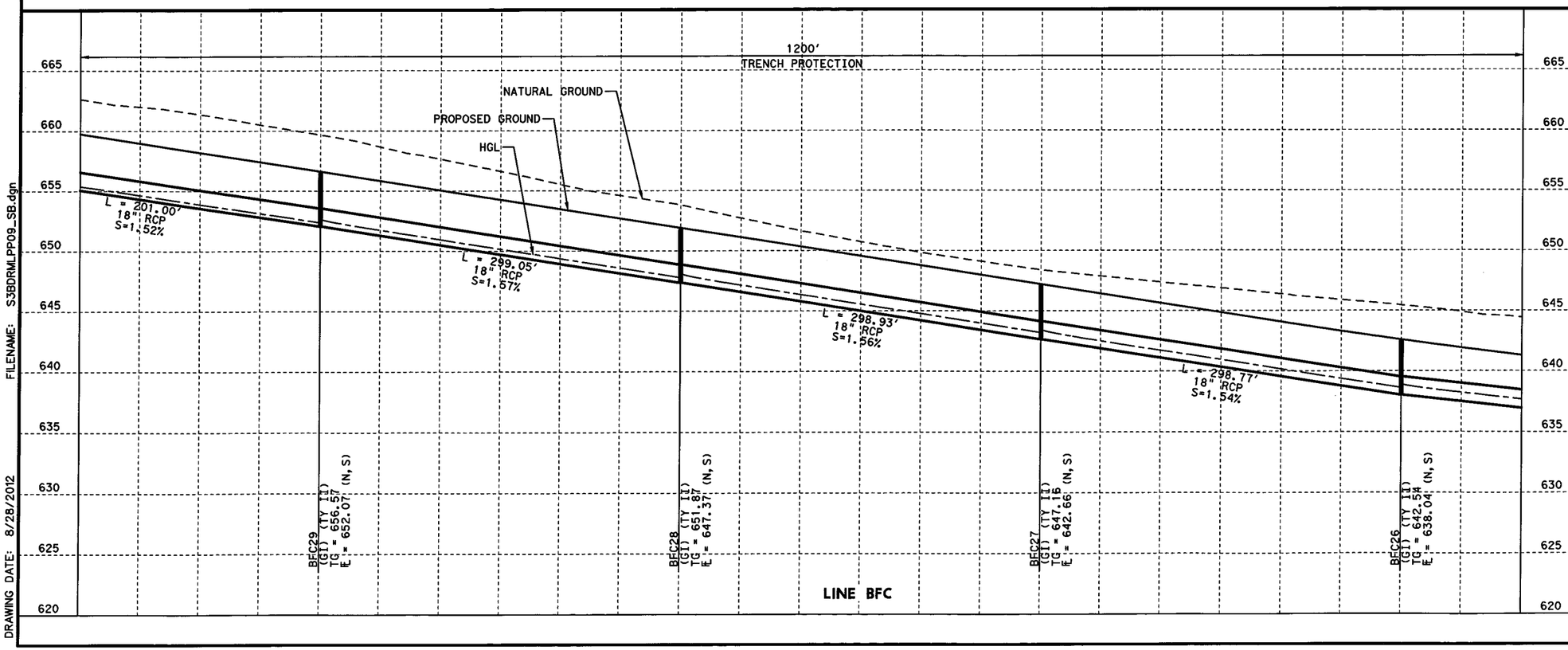

STATE OF TEXAS
B. VANDERWALT
81580
LICENSED
PROFESSIONAL ENGINEER

8/29/2012

I. S. ENGINEERS, LLC

TBPE REG. # F-11657

Texas Department of Transportation

© 2012

IH 35W FROM NORTH TARRANT PKWY TO IH 820

DRAINAGE PLAN & PROFILE

IH 35W MANAGED LANES SB

STA 1490+00 TO STA 1502+00

SCALE: 1" = 100' H, 1" = 10' V

SHEET 12 OF 28

DESIGN	FED.RD. DIV.NO.	FEDERAL AID PROJECT NO.		HIGHWAY NO.
BV	6	(SEE TITLE SHEET)		IH 35W
GRAPHICS	STATE	DISTRICT	COUNTY	SHEET NO.
ZS	TEXAS	FTW	TARRANT	1216
CHECK	CONTROL	SECTION	JOB	
SY	0014	16	255, ETC.	
CHECK				
MNM				

FILENAME: S3BDRMLPP09_SB.dgn

DRAWING DATE: 8/28/2012

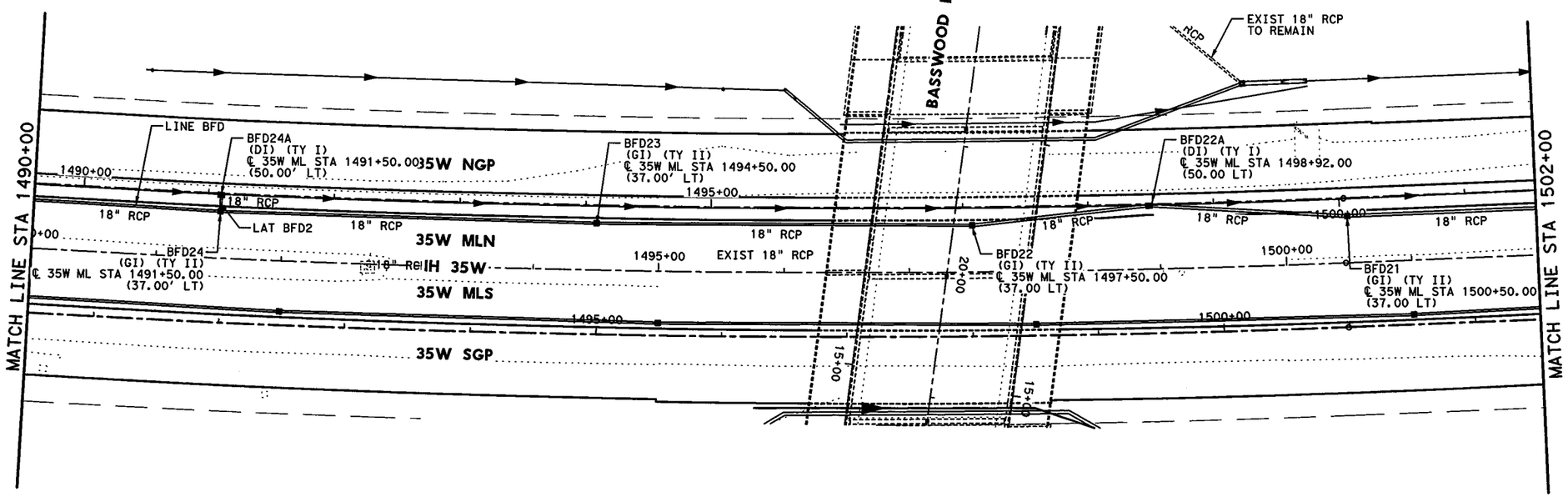

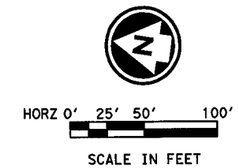

GENERAL NOTES

1. ALL LOCATIONS FOR CURB INLETS ARE SHOWN TO THE FACE OF CURB.
2. ALL LOCATIONS FOR DITCH INLETS, GRATE INLETS, AND MANHOLES ARE SHOWN TO CENTER POINT (CP) OF INLET BOX OR MANHOLE BOX.
3. REFERENCE ROADWAY PLAN AND PROFILE SHEETS FOR ADDITIONAL INFORMATION.
4. REFERENCE CULVERT PLAN AND PROFILE SHEETS FOR ADDITIONAL INFORMATION.
5. REFERENCE DRIVEWAY DETAIL SHEETS FOR ADDITIONAL INFORMATION.
6. (GI) = GRATE INLET (DI) = DROP INLET
   (CI) = CURB INLET (MH) = MANHOLE
   (TR) = TOP OF RIM (TG) = TOP OF GRATE
   (TC) = TOP OF CURB
   (W/DB) = WITH DITCH BLOCK
7. GEOPAK DRAINAGE WAS USED FOR THE STORM SEWER DESIGN COMPUTATIONS.
8. HGL REFLECTS 10 YR DESIGN STORM.
9. REFER TO CROSS-SECTIONS FOR DITCH INFORMATION.

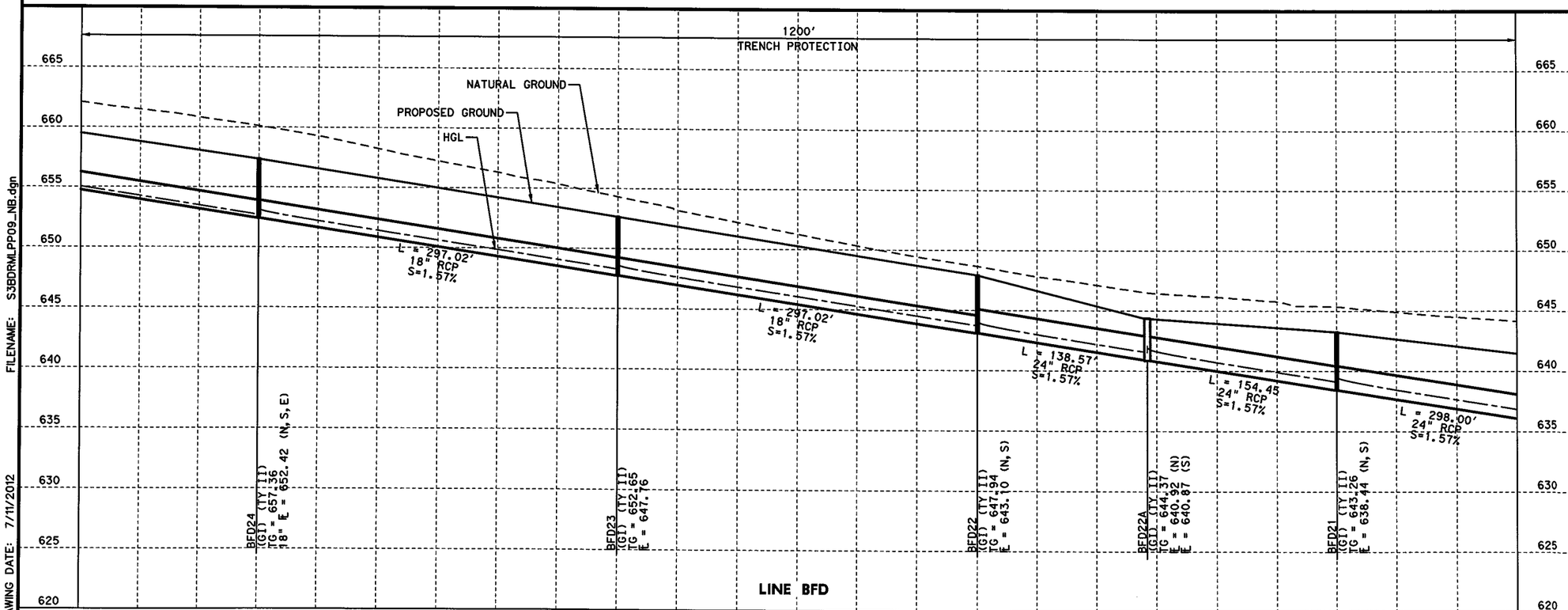

STATE OF TEXAS
B. VANDERWALT
81580
LICENSED
PROFESSIONAL ENGINEER

B. Vanderwalt P.E.
7/11/2012

I. S. ENGINEERS, LLC
TBPE REG. # F-11657

Texas Department of Transportation
© 2012

IH 35W FROM NORTH TARRANT PKWY TO IH 820

DRAINAGE PLAN & PROFILE
IH 35W MANAGED LANES NB
STA 1490+00 TO STA 1502+00

SCALE: 1" = 100' H, 1" = 10' V — SHEET 13 OF 28

DESIGN	FED.RD. DIV.NO.	FEDERAL AID PROJECT NO.		HIGHWAY NO.
BV	6	(SEE TITLE SHEET)		IH 35W
GRAPHICS ZS	STATE	DISTRICT	COUNTY	SHEET NO.
CHECK SY	TEXAS	FTW	TARRANT	1217
CHECK MNM	CONTROL 0014	SECTION 16	JOB 255, ETC.	

FILENAME: S3BDRMLPP09_NB.dgn
DRAWING DATE: 7/11/2012

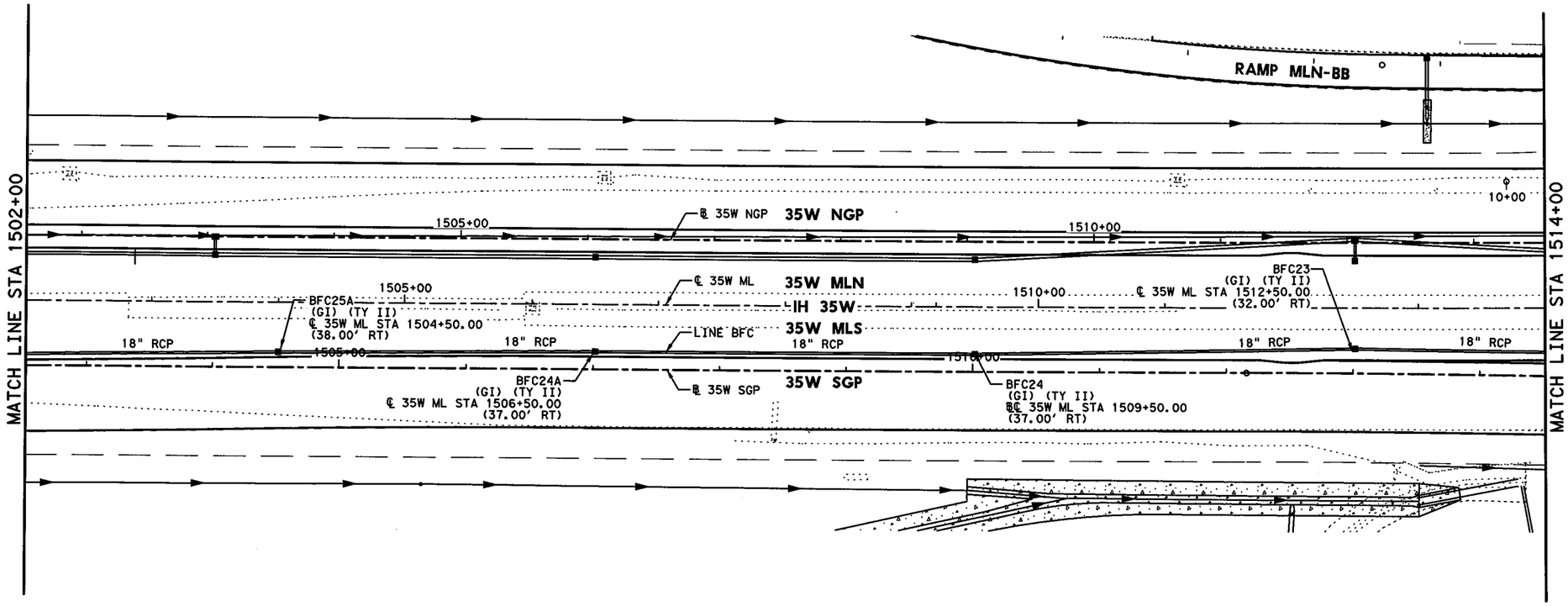

HORZ 0' 25' 50' 100'

SCALE IN FEET

GENERAL NOTES

1. ALL LOCATIONS FOR CURB INLETS ARE SHOWN TO THE FACE OF CURB.
2. ALL LOCATIONS FOR DITCH INLETS, GRATE INLETS, AND MANHOLES ARE SHOWN TO CENTER POINT (CP) OF INLET BOX OR MANHOLE BOX.
3. REFERENCE ROADWAY PLAN AND PROFILE SHEETS FOR ADDITIONAL INFORMATION.
4. REFERENCE CULVERT PLAN AND PROFILE SHEETS FOR ADDITIONAL INFORMATION.
5. REFERENCE DRIVEWAY DETAIL SHEETS FOR ADDITIONAL INFORMATION.
6. (GI) = GRATE INLET (DI) = DROP INLET
   (CI) = CURB INLET (MH) = MANHOLE
   (TR) = TOP OF RIM (TG) = TOP OF GRATE
   (TC) = TOP OF CURB
   (W/DB) = WITH DITCH BLOCK
7. GEOPAK DRAINAGE WAS USED FOR THE STORM SEWER DESIGN COMPUTATIONS.
8. HGL REFLECTS 10 YR DESIGN STORM.
9. REFER TO CROSS-SECTIONS FOR DITCH INFORMATION.

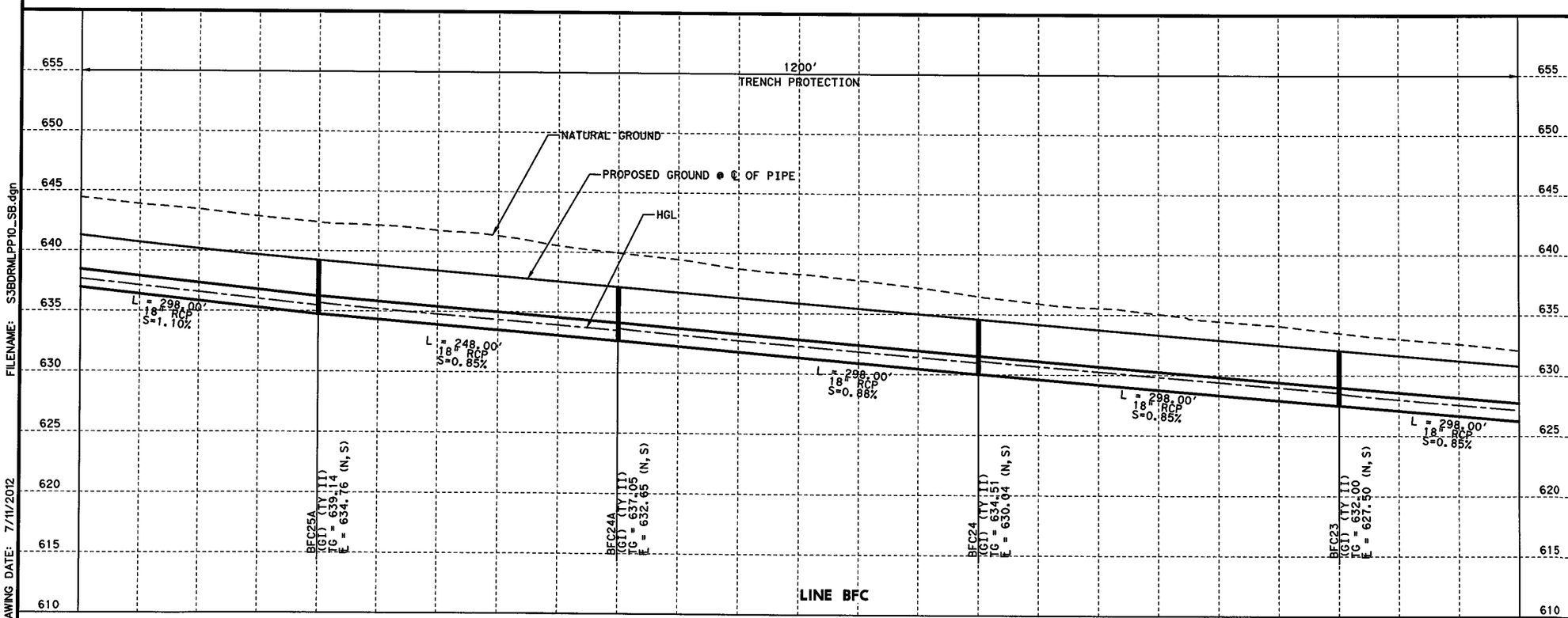

STATE OF TEXAS
B. VANDERWALT
81580
LICENSED
PROFESSIONAL ENGINEER

Brian Vanderwalt P.E.
7/11/2012

I. S. ENGINEERS, LLC

TBPE REG. # F-11657

Texas Department of Transportation

© 2012

IH 35W FROM NORTH TARRANT PKWY TO IH 820

DRAINAGE PLAN & PROFILE

IH 35W MANAGED LANES SB

STA 1502+00 TO STA 1514+00

SCALE: 1" = 100' H, 1" = 10' V

SHEET 14 OF 28

DESIGN	FED.RD. DIV.NO.	FEDERAL AID PROJECT NO.		HIGHWAY NO.
BV	6	(SEE TITLE SHEET)		IH 35W
GRAPHICS ZS	STATE	DISTRICT	COUNTY	SHEET NO.
CHECK SY	TEXAS	FTW	TARRANT	1218
CHECK MNM	CONTROL	SECTION	JOB	
	0014	16	255, ETC.	

FILENAME: S3BDRMLPP10_SB.dgn

DRAWING DATE: 7/11/2012

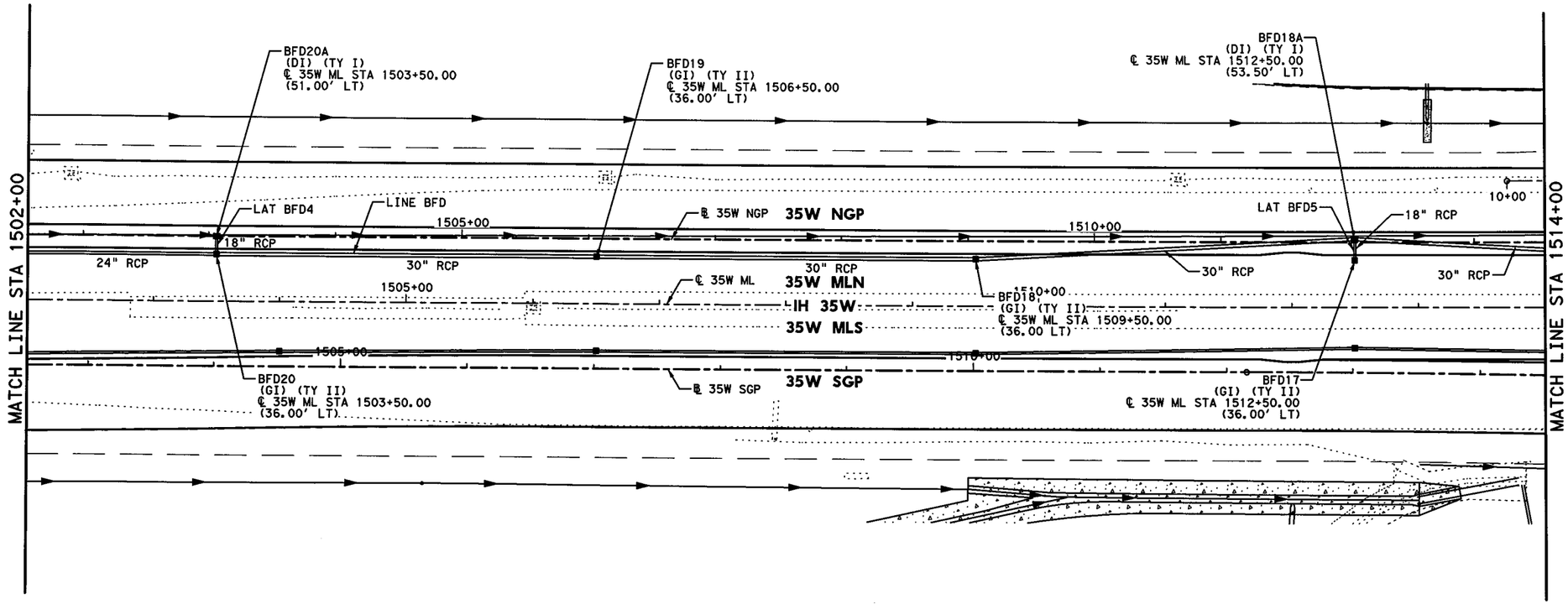

HORZ 0' 25' 50' 100'

SCALE IN FEET

GENERAL NOTES

1. ALL LOCATIONS FOR CURB INLETS ARE SHOWN TO THE FACE OF CURB.
2. ALL LOCATIONS FOR DITCH INLETS, GRATE INLETS, AND MANHOLES ARE SHOWN TO CENTER POINT (CP) OF INLET BOX OR MANHOLE BOX.
3. REFERENCE ROADWAY PLAN AND PROFILE SHEETS FOR ADDITIONAL INFORMATION.
4. REFERENCE CULVERT PLAN AND PROFILE SHEETS FOR ADDITIONAL INFORMATION.
5. REFERENCE DRIVEWAY DETAIL SHEETS FOR ADDITIONAL INFORMATION.
6. (GI) = GRATE INLET (DI) = DROP INLET
   (CI) = CURB INLET (MH) = MANHOLE
   (TR) = TOP OF RIM (TG) = TOP OF GRATE
   (TC) = TOP OF CURB
   (W/DB) = WITH DITCH BLOCK
7. GEOPAK DRAINAGE WAS USED FOR THE STORM SEWER DESIGN COMPUTATIONS.
8. HGL REFLECTS 10 YR DESIGN STORM.
9. REFER TO CROSS-SECTIONS FOR DITCH INFORMATION.

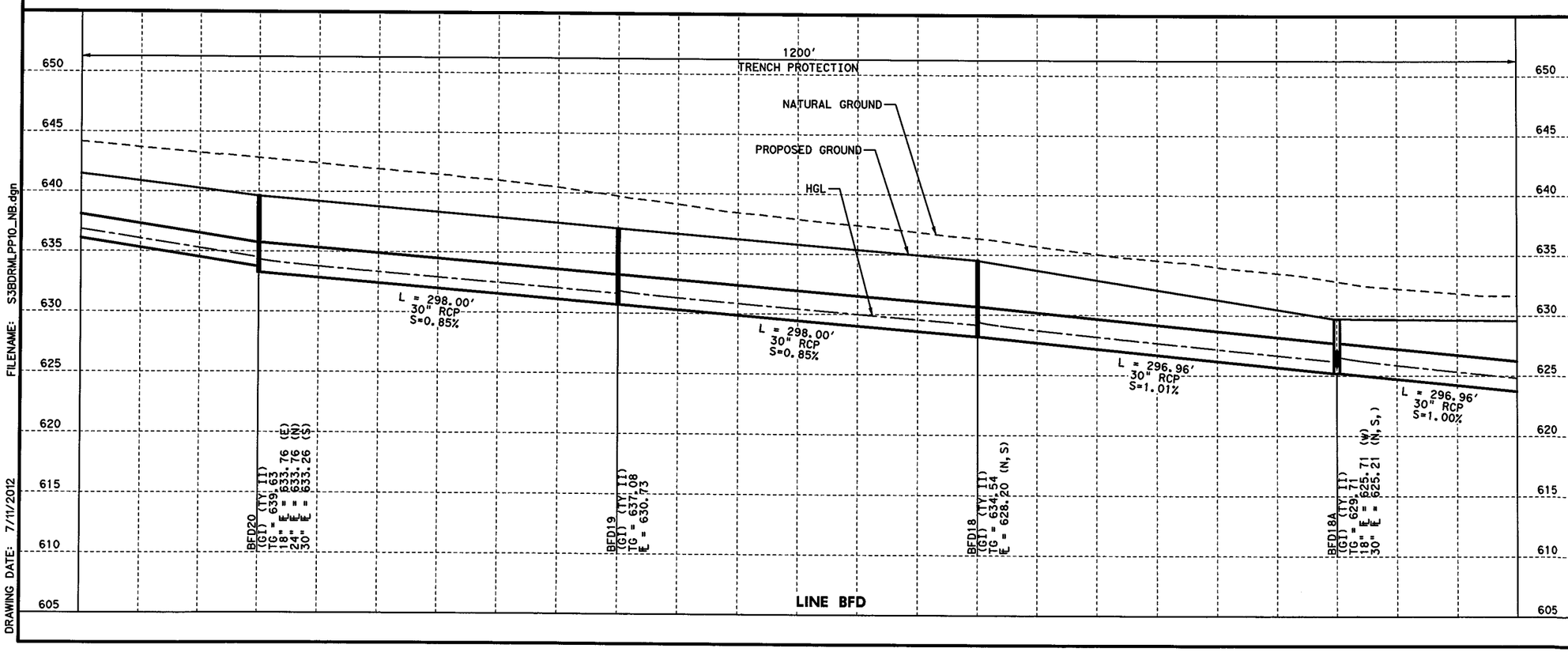

STATE OF TEXAS
B. VANDERWALT
81580
LICENSED
PROFESSIONAL ENGINEER

B. Vanderwalt P.E.
7/11/2012

I. S. ENGINEERS, LLC
TBPE REG. # F-11657

Texas Department of Transportation
© 2012

IH 35W FROM NORTH TARRANT PKWY TO IH 820

DRAINAGE PLAN & PROFILE

IH 35W MANAGED LANES NB

STA 1502+00 TO STA 1514+00

SCALE: 1" = 100' H, 1" = 10' V — SHEET 15 OF 28

DESIGN	FED.RD. DIV.NO.	FEDERAL AID PROJECT NO.		HIGHWAY NO.
BV	6	(SEE TITLE SHEET)		IH 35W
GRAPHICS	STATE	DISTRICT	COUNTY	SHEET NO.
ZS	TEXAS	FTW	TARRANT	1219
CHECK	CONTROL	SECTION	JOB	
SY	0014	16	255, ETC.	
CHECK				
MNM				

FILENAME: S3BDRMLPP10_NB.dgn

DRAWING DATE: 7/11/2012

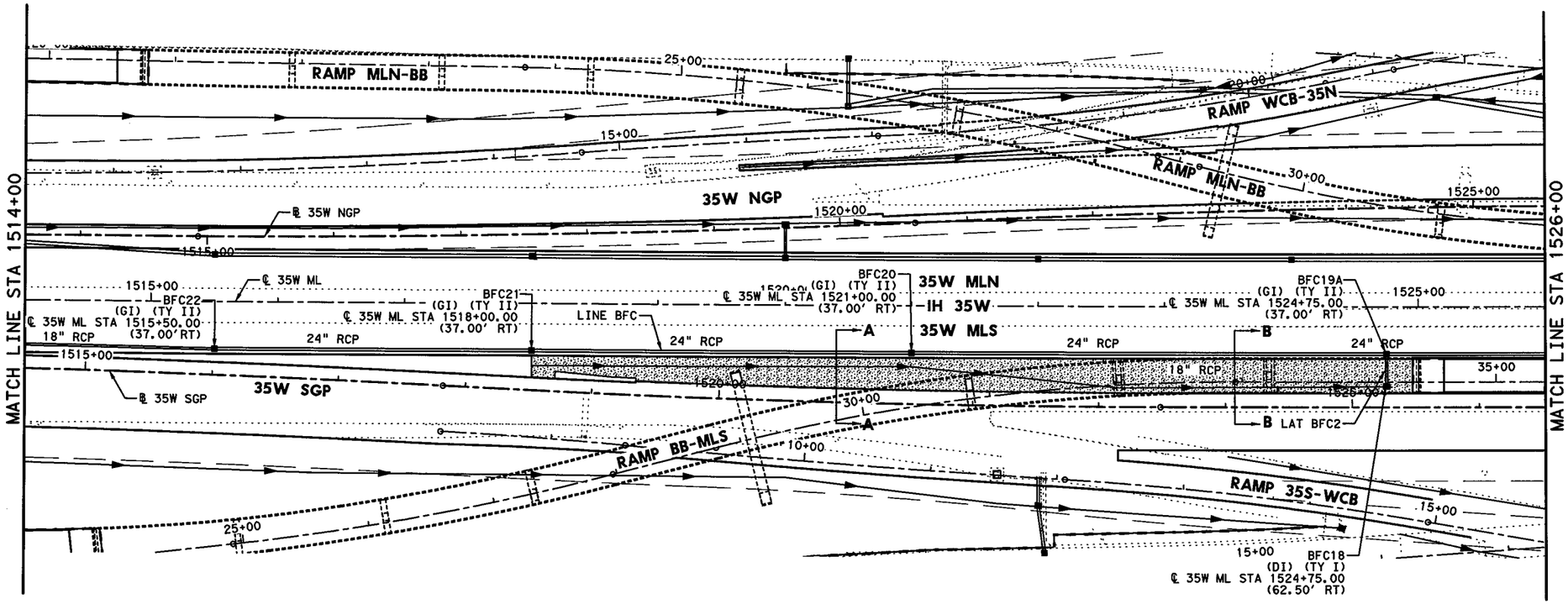

HORZ 0' 25' 50' 100'

SCALE IN FEET

GENERAL NOTES

1. ALL LOCATIONS FOR CURB INLETS ARE SHOWN TO THE FACE OF CURB.
2. ALL LOCATIONS FOR DITCH INLETS, GRATE INLETS, AND MANHOLES ARE SHOWN TO CENTER POINT (CP) OF INLET BOX OR MANHOLE BOX.
3. REFERENCE ROADWAY PLAN AND PROFILE SHEETS FOR ADDITIONAL INFORMATION.
4. REFERENCE CULVERT PLAN AND PROFILE SHEETS FOR ADDITIONAL INFORMATION.
5. REFERENCE DRIVEWAY DETAIL SHEETS FOR ADDITIONAL INFORMATION.
6. (GI) = GRATE INLET (DI) = DROP INLET
   (CI) = CURB INLET (MH) = MANHOLE
   (TR) = TOP OF RIM (TG) = TOP OF GRATE
   (TC) = TOP OF CURB
   (W/DB) = WITH DITCH BLOCK
7. GEOPAK DRAINAGE WAS USED FOR THE STORM SEWER DESIGN COMPUTATIONS.
8. HGL REFLECTS 10 YR DESIGN STORM.
9. REFER TO CROSS-SECTIONS FOR DITCH INFORMATION.

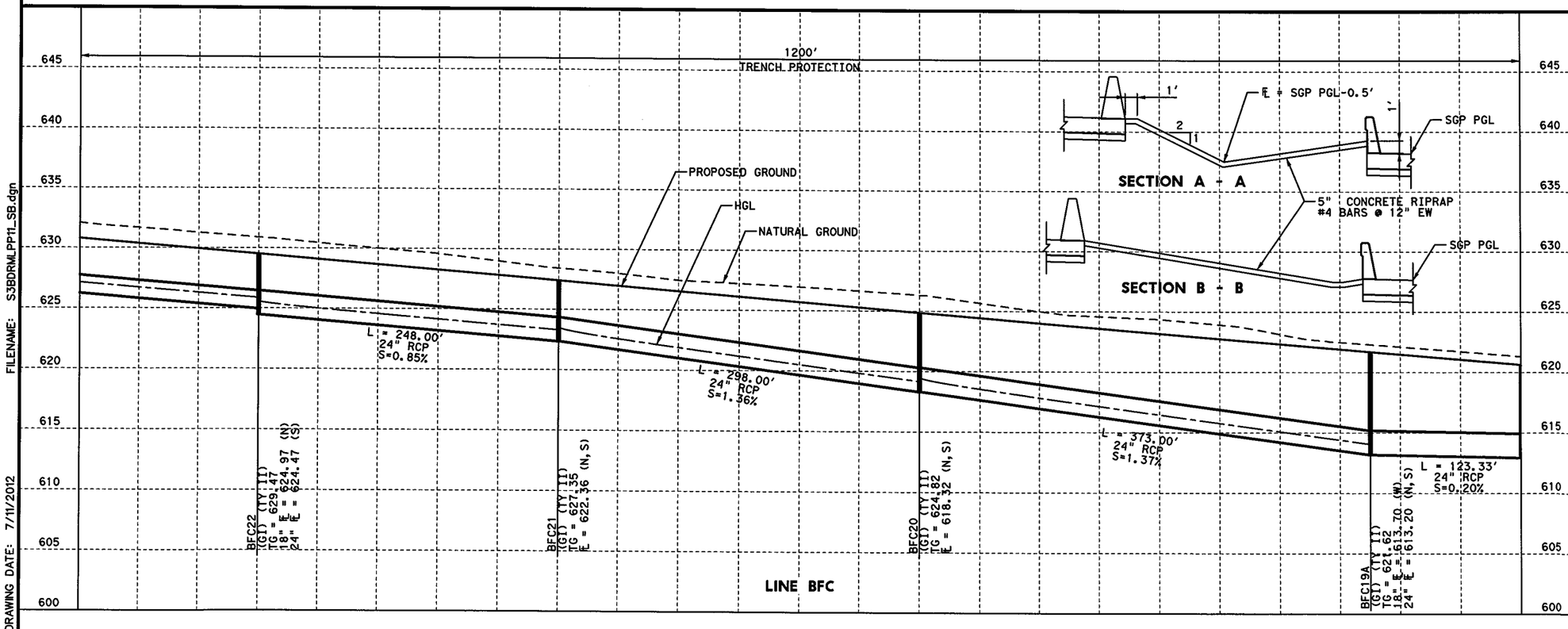

I. S. ENGINEERS, LLC

TBPE REG. # F-11657

Texas Department of Transportation

© 2012

IH 35W FROM NORTH TARRANT PKWY TO IH 820

DRAINAGE PLAN & PROFILE

IH 35W MANAGED LANES SB

STA 1514+00 TO STA 1526+00

SCALE: 1" = 100' H, 1" = 10' V

SHEET 16 OF 28

DESIGN	FED.RD. DIV.NO.	FEDERAL AID PROJECT NO.		HIGHWAY NO.
BV	6	(SEE TITLE SHEET)		IH 35W
GRAPHICS ZS	STATE	DISTRICT	COUNTY	SHEET NO.
CHECK SY	TEXAS	FTW	TARRANT	1220
CHECK MNM	CONTROL 0014	SECTION 16	JOB 255, ETC.	

FILENAME: S3BDRMLPP11_SB.dgn

DRAWING DATE: 7/11/2012

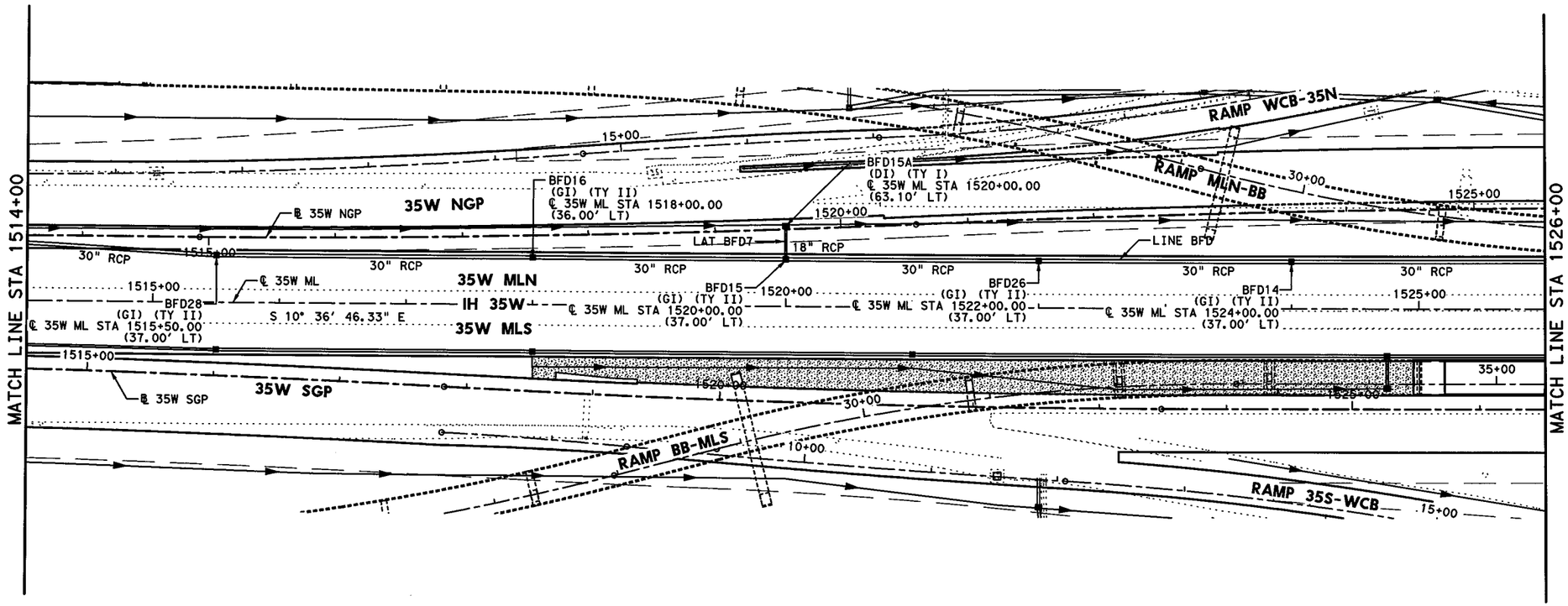

HORZ 0' 25' 50' 100'

SCALE IN FEET

GENERAL NOTES

1. ALL LOCATIONS FOR CURB INLETS ARE SHOWN TO THE FACE OF CURB.
2. ALL LOCATIONS FOR DITCH INLETS, GRATE INLETS, AND MANHOLES ARE SHOWN TO CENTER POINT (CP) OF INLET BOX OR MANHOLE BOX.
3. REFERENCE ROADWAY PLAN AND PROFILE SHEETS FOR ADDITIONAL INFORMATION.
4. REFERENCE CULVERT PLAN AND PROFILE SHEETS FOR ADDITIONAL INFORMATION.
5. REFERENCE DRIVEWAY DETAIL SHEETS FOR ADDITIONAL INFORMATION.
6. (GI) = GRATE INLET (DI) = DROP INLET
   (CI) = CURB INLET (MH) = MANHOLE
   (TR) = TOP OF RIM (TG) = TOP OF GRATE
   (TC) = TOP OF CURB
   (W/DB) = WITH DITCH BLOCK
7. GEOPAK DRAINAGE WAS USED FOR THE STORM SEWER DESIGN COMPUTATIONS.
8. HGL REFLECTS 10 YR DESIGN STORM.
9. REFER TO CROSS-SECTIONS FOR DITCH INFORMATION.

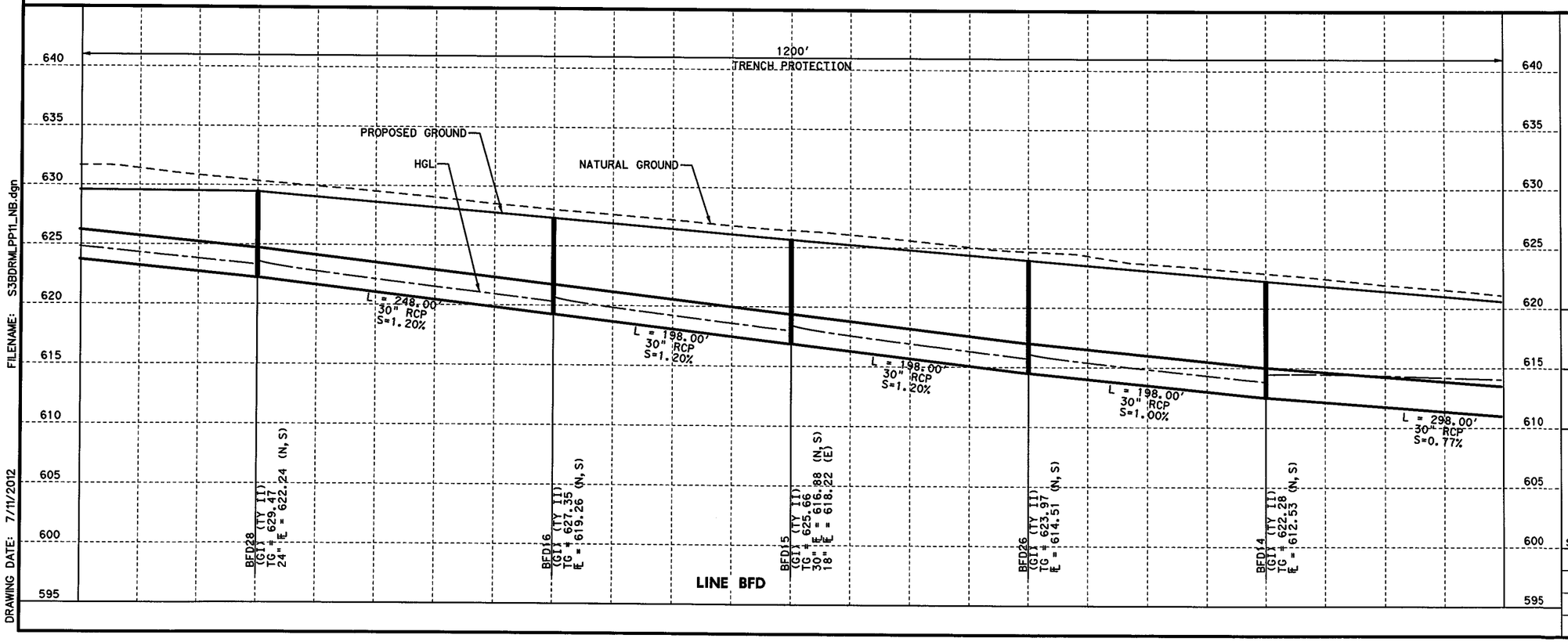

STATE OF TEXAS
B. VANDERWALT
81580
LICENSED
PROFESSIONAL ENGINEER

Bernadette P.E.
7/11/2012

I. S. ENGINEERS, LLC

TBPE REG. # F-11657

Texas Department of Transportation

© 2012

IH 35W FROM NORTH TARRANT PKWY TO IH 820

DRAINAGE PLAN & PROFILE

IH 35W MANAGED LANES NB

STA 1514+00 TO STA 1526+00

SCALE: 1" = 100' H, 1" = 10' V

SHEET 17 OF 28

DESIGN	FED.RD. DIV.NO.	FEDERAL AID PROJECT NO.		HIGHWAY NO.
BV	6	(SEE TITLE SHEET)		IH 35W
GRAPHICS	STATE	DISTRICT	COUNTY	SHEET NO.
ZS	TEXAS	FTW	TARRANT	1221
CHECK	CONTROL	SECTION	JOB	
SY	0014	16	255, ETC.	
CHECK				
MNM				

FILENAME: S3BDRML_PP11_NB.dgn

DRAWING DATE: 7/11/2012

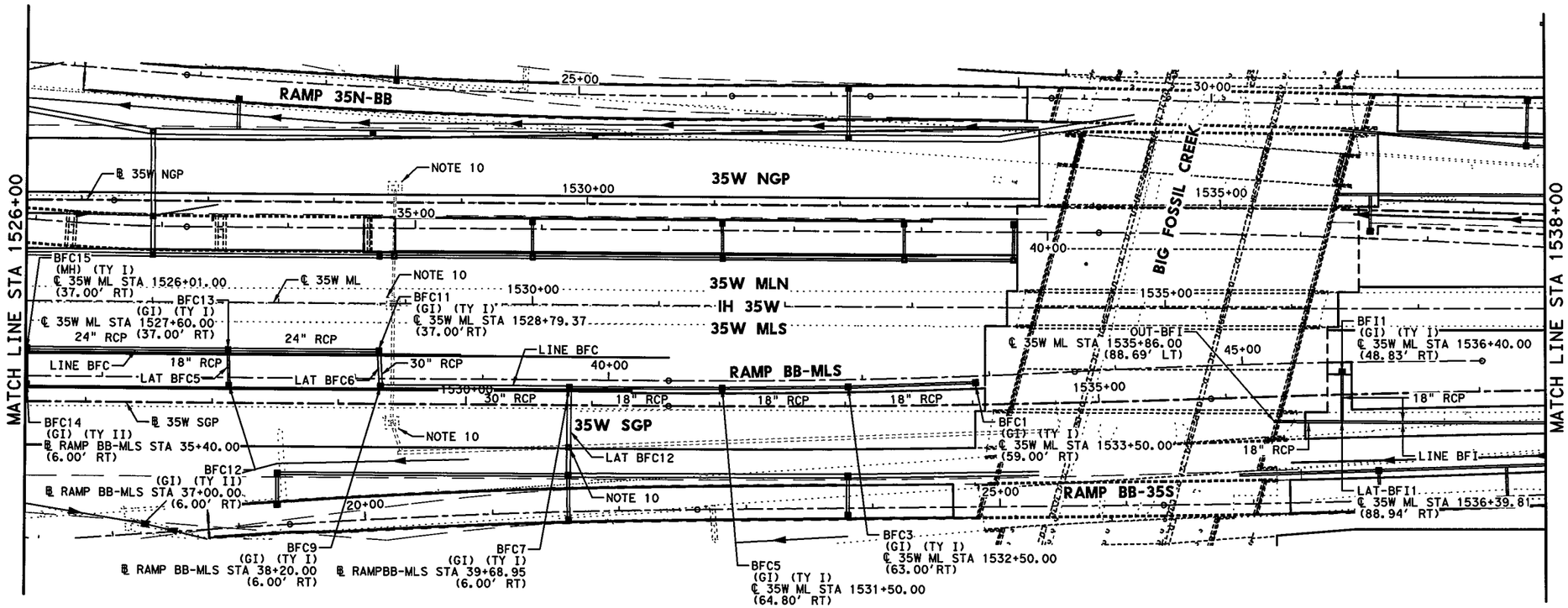

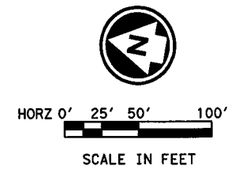

GENERAL NOTES

1. ALL LOCATIONS FOR CURB INLETS ARE SHOWN TO THE FACE OF CURB.
2. ALL LOCATIONS FOR DITCH INLETS, GRATE INLETS, AND MANHOLES ARE SHOWN TO CENTER POINT (CP) OF INLET BOX OR MANHOLE BOX.
3. REFERENCE ROADWAY PLAN AND PROFILE SHEETS FOR ADDITIONAL INFORMATION.
4. REFERENCE CULVERT PLAN AND PROFILE SHEETS FOR ADDITIONAL INFORMATION.
5. REFERENCE DRIVEWAY DETAIL SHEETS FOR ADDITIONAL INFORMATION.
6. (GI) = GRATE INLET (DI) = DROP INLET
   (CI) = CURB INLET (MH) = MANHOLE
   (TR) = TOP OF RIM (TG) = TOP OF GRATE
   (TC) = TOP OF CURB
   (W/DB) = WITH DITCH BLOCK
7. GEOPAK DRAINAGE WAS USED FOR THE STORM SEWER DESIGN COMPUTATIONS.
8. HGL REFLECTS 10 YR DESIGN STORM.
9. REFER TO CROSS-SECTIONS FOR DITCH INFORMATION.
10. MAINTAIN EXIST STM SWR FOR TEMPORARY DRAINAGE DURING CONSTRUCTION. SEE TRAFFIC CONTROL PLANS FOR ADD INFO. PLUG AND ABANDON IN-PLACE.

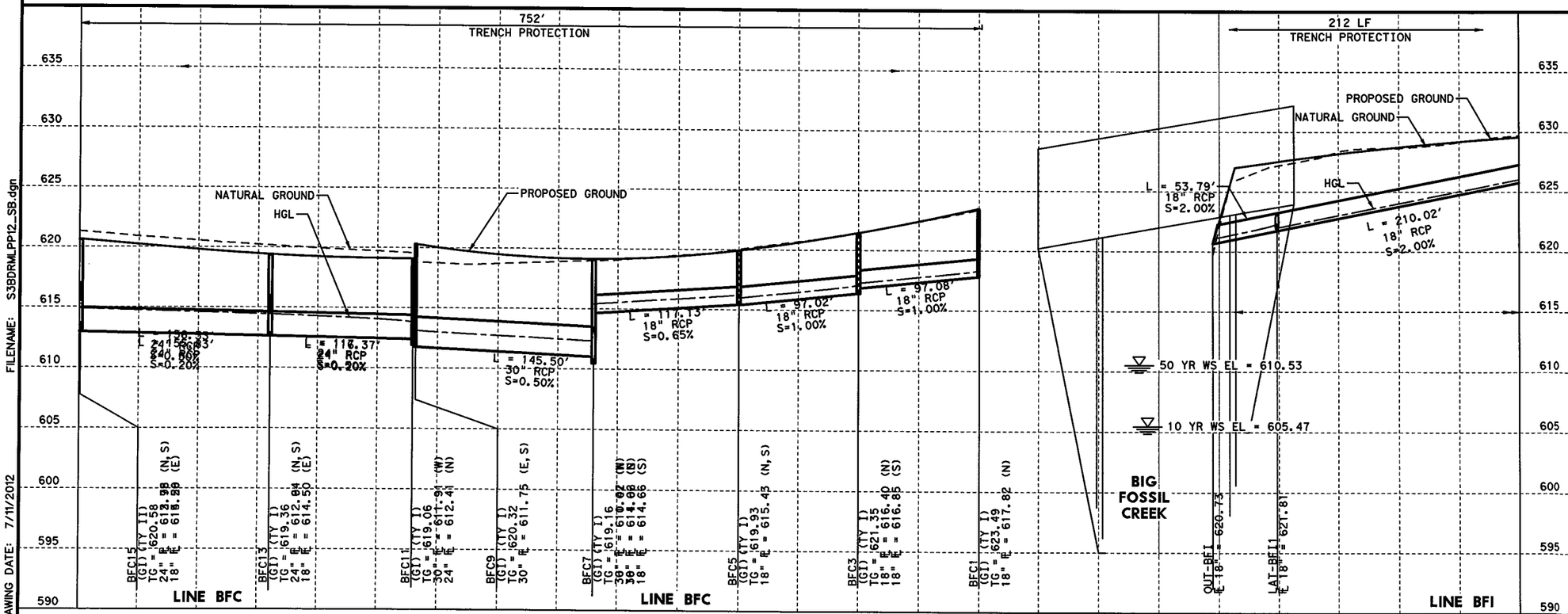

I. S. ENGINEERS, LLC
TBPE REG. # F-11657

Texas Department of Transportation
© 2012

IH 35W FROM NORTH TARRANT PKWY TO IH 820

DRAINAGE PLAN & PROFILE
IH 35W MANAGED LANES SB
STA 1526+00 TO STA 1538+00

SCALE: 1" = 100' H, 1" = 10' V — SHEET 18 OF 28

DESIGN	FED.RD. DIV.NO.	FEDERAL AID PROJECT NO.		HIGHWAY NO.
BV	6	(SEE TITLE SHEET)		IH 35W
GRAPHICS	STATE	DISTRICT	COUNTY	SHEET NO.
ZS	TEXAS	FTW	TARRANT	1222
CHECK	CONTROL	SECTION	JOB	
SY / MNM	0014	16	255, ETC.	

FILENAME: S3BDRML_PP12_SB.dgn
DRAWING DATE: 7/11/2012

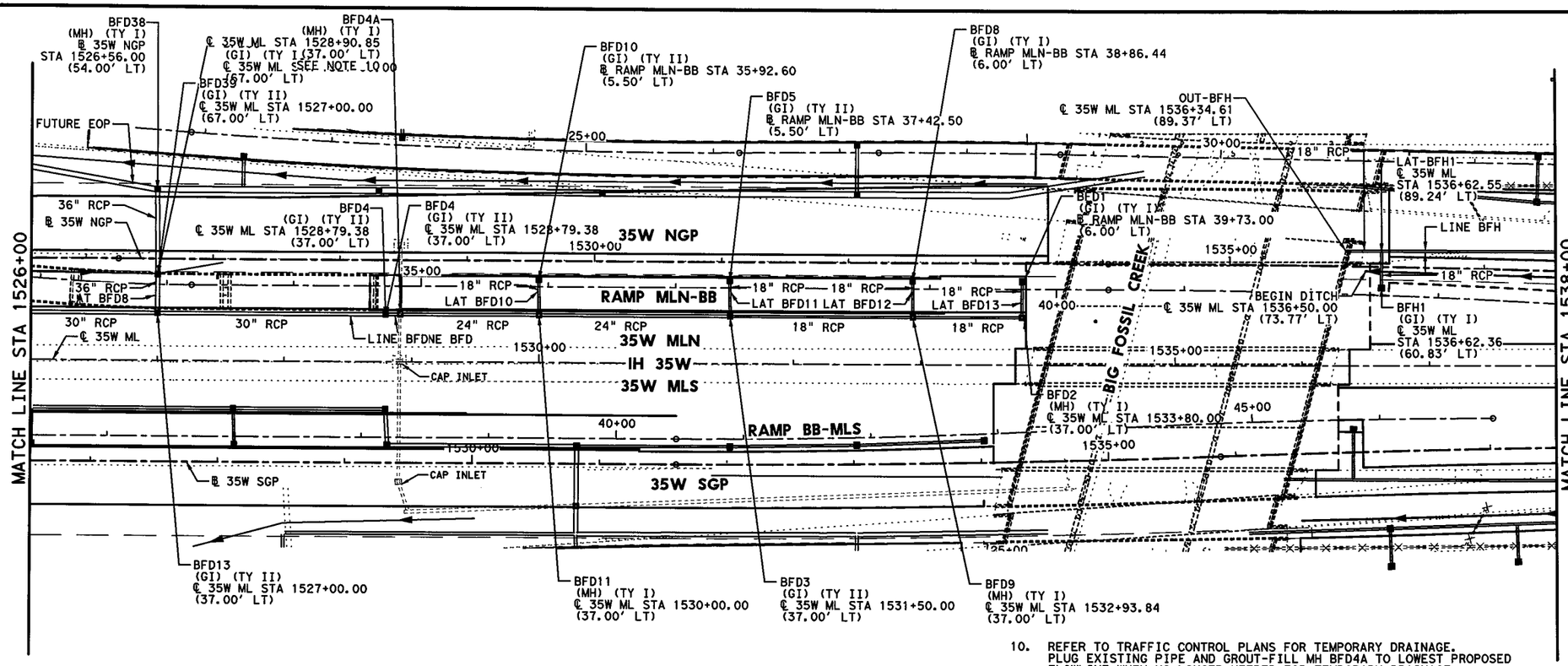

10. REFER TO TRAFFIC CONTROL PLANS FOR TEMPORARY DRAINAGE. PLUG EXISTING PIPE AND GROUT-FILL MH BFD4A TO LOWEST PROPOSED FLOWLINE WHEN NO LONGER NEEDED FOR TEMPORARY DRAINAGE

HORZ 0' 25' 50' 100'

SCALE IN FEET

GENERAL NOTES

1. ALL LOCATIONS FOR CURB INLETS ARE SHOWN TO THE FACE OF CURB.
2. ALL LOCATIONS FOR DITCH INLETS, GRATE INLETS, AND MANHOLES ARE SHOWN TO CENTER POINT (CP) OF INLET BOX OR MANHOLE BOX.
3. REFERENCE ROADWAY PLAN AND PROFILE SHEETS FOR ADDITIONAL INFORMATION.
4. REFERENCE CULVERT PLAN AND PROFILE SHEETS FOR ADDITIONAL INFORMATION.
5. REFERENCE DRIVEWAY DETAIL SHEETS FOR ADDITIONAL INFORMATION.
6. (GI) = GRATE INLET (DI) = DROP INLET
   (CI) = CURB INLET (MH) = MANHOLE
   (TR) = TOP OF RIM (TG) = TOP OF GRATE
   (TC) = TOP OF CURB
   (W/DB) = WITH DITCH BLOCK
7. GEOPAK DRAINAGE WAS USED FOR THE STORM SEWER DESIGN COMPUTATIONS.
8. HGL REFLECTS 10 YR DESIGN STORM.
9. REFER TO CROSS-SECTIONS FOR DITCH INFORMATION.

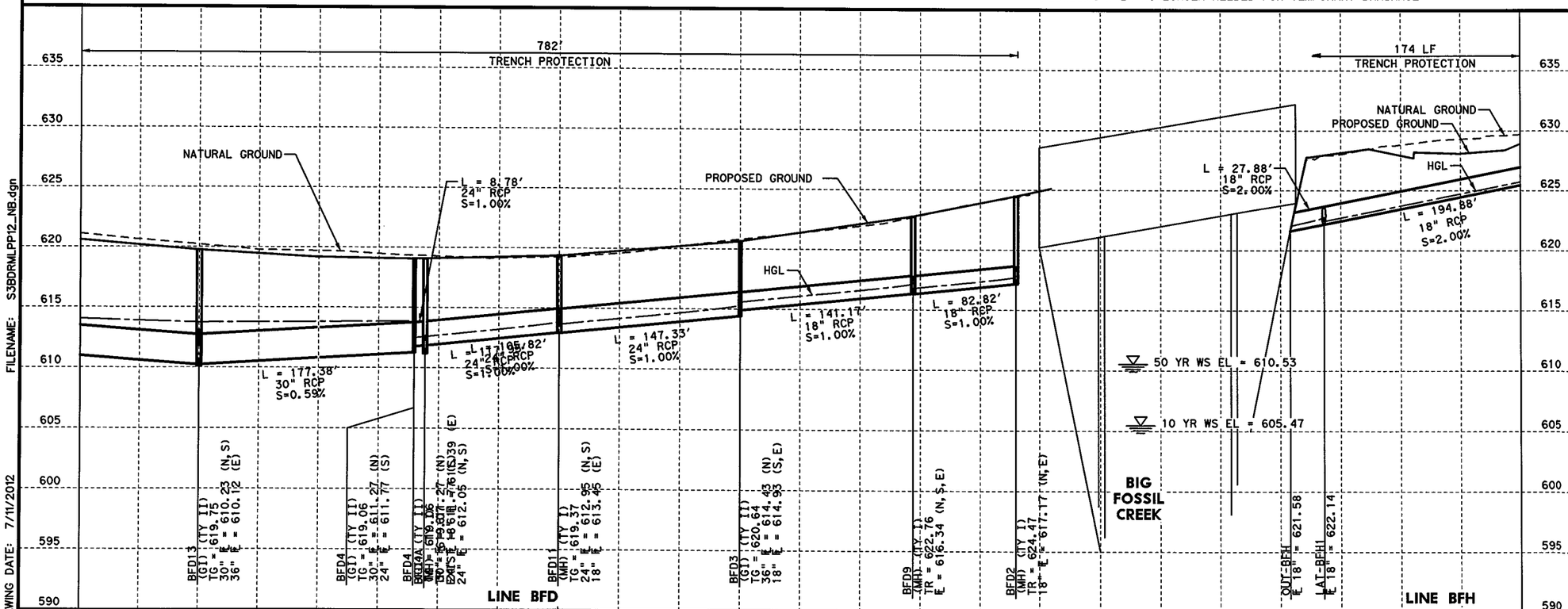

FILENAME: S3BDRMLPP12_NB.dgn

DRAWING DATE: 7/11/2012

STATE OF TEXAS
B. VANDERWALT
81580
LICENSED PROFESSIONAL ENGINEER
7/11/2012

I. S. ENGINEERS, LLC
TBPE REG. # F-11657

Texas Department of Transportation
© 2012

IH 35W FROM NORTH TARRANT PKWY TO IH 820

DRAINAGE PLAN & PROFILE
IH 35W MANAGED LANES NB
STA 1526+00 TO STA 1538+00

SCALE: 1" = 100'H, 1" = 10'V

SHEET 19 OF 26

DESIGN	FED.RD. DIV.NO.	FEDERAL AID PROJECT NO.		HIGHWAY NO.
BV	6	(SEE TITLE SHEET)		IH 35W
GRAPHICS ZS	STATE	DISTRICT	COUNTY	SHEET NO.
CHECK SY	TEXAS	FTW	TARRANT	1223
CHECK MNM	CONTROL 0014	SECTION 16	JOB 255, ETC.	

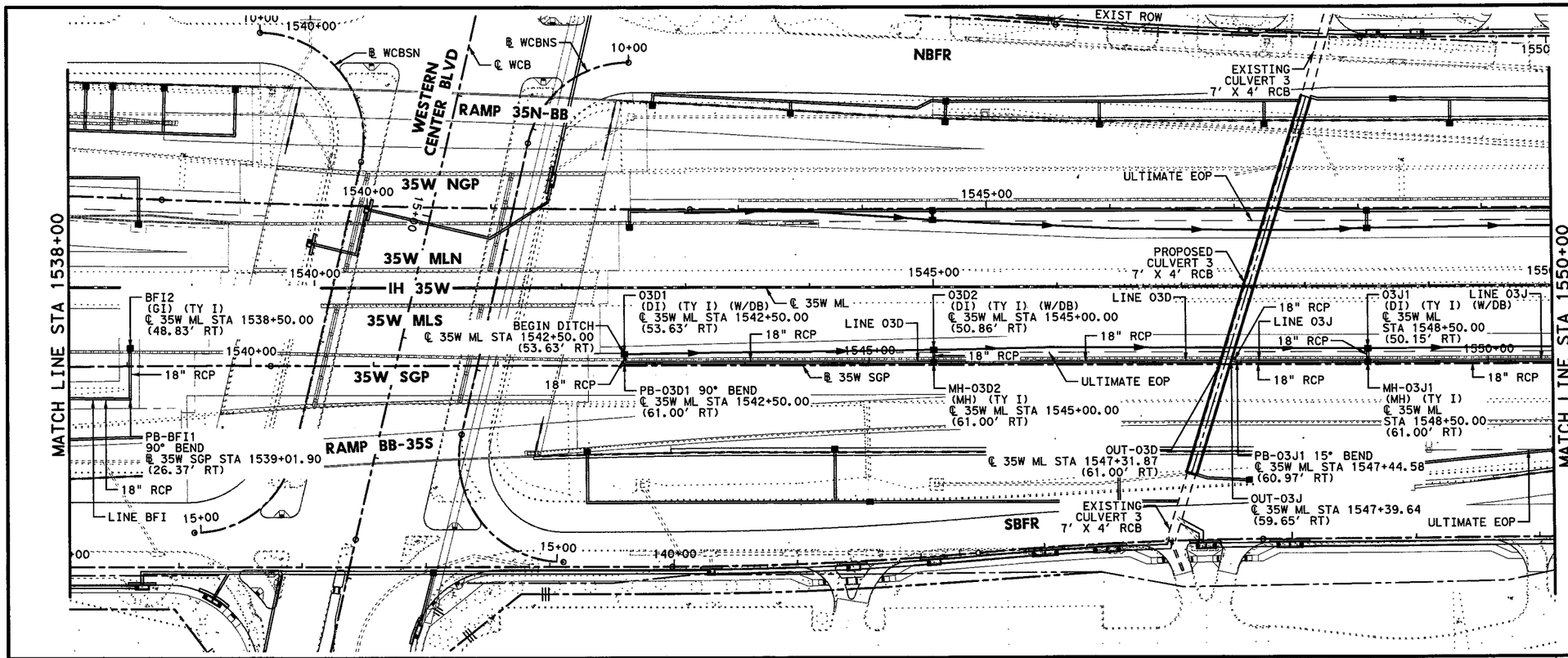

HORZ 0' 25' 50' 100'
VERT 0' 5' 10'
SCALE IN FEET

GENERAL NOTES

1. ALL LOCATIONS FOR CURB INLETS ARE SHOWN TO THE FACE OF CURB.
2. ALL LOCATIONS FOR DITCH INLETS, GRATE INLETS, AND MANHOLES ARE SHOWN TO CENTER POINT (CP) OF INLET BOX OR MANHOLE BOX.
3. REFERENCE ROADWAY PLAN AND PROFILE SHEETS FOR ADDITIONAL INFORMATION.
4. REFERENCE CULVERT PLAN AND PROFILE SHEETS FOR ADDITIONAL INFORMATION.
5. REFERENCE DRIVEWAY DETAIL SHEETS FOR ADDITIONAL INFORMATION.
6. (GI) = GRATE INLET (DI) = DROP INLET
   (CI) = CURB INLET (MH) = MANHOLE
   (TR) = TOP OF RIM (TG) = TOF OF GRATE
   (TC) = TOP OF CURB
   (W/DB) = WITH DITCH BLOCK
7. GEOPAK DRAINAGE WAS USED FOR THE STORM SEWER DESIGN COMPUTATIONS.
8. HGL REFLECTS 10 YR DESIGN STORM.
9. REFER TO CROSS-SECTIONS FOR DITCH INFORMATION.

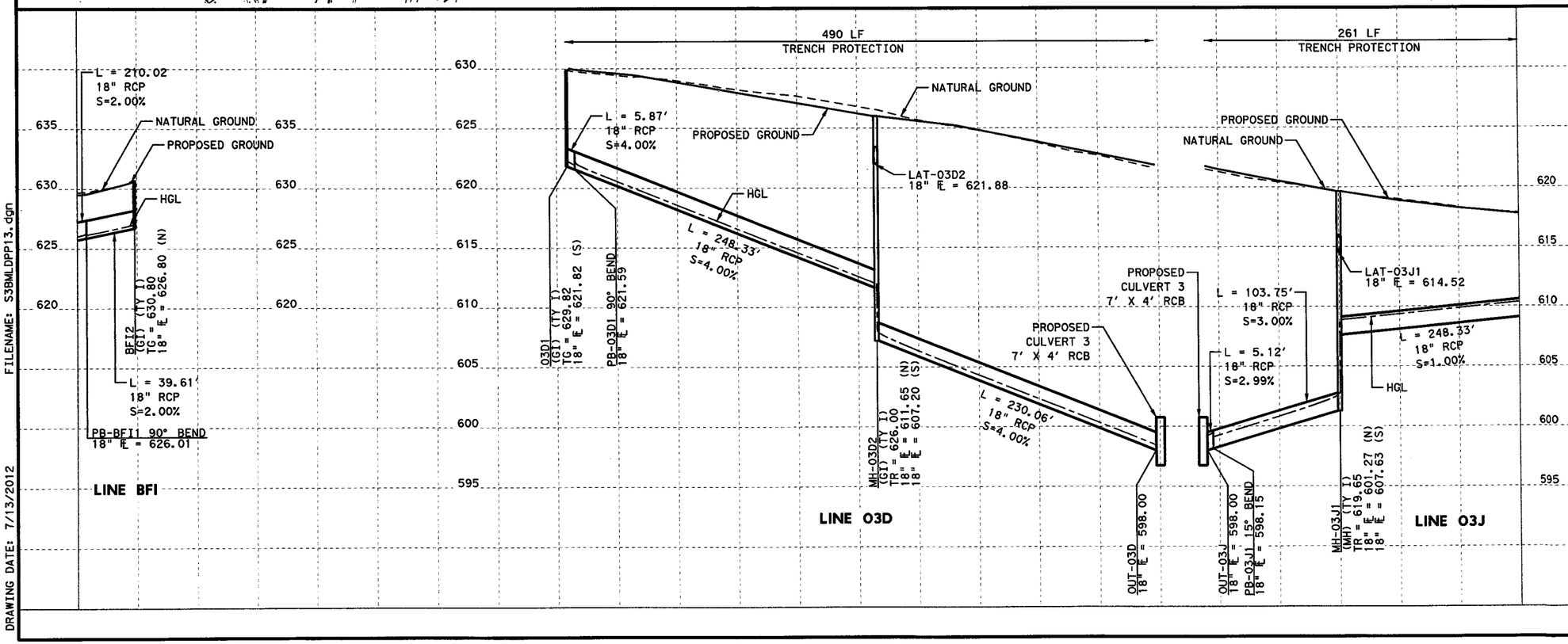

STATE OF TEXAS
THOMAS E. T. COCHILL
87665
LICENSED
PROFESSIONAL ENGINEER
Thomas E. T. Cochill
7/6/12

CP&Y, INC.
TBPE REGISTRATION NO. F-1741

Texas Department of Transportation
© 2012

IH 35W FROM NORTH TARRANT PKWY TO IH 820

DRAINAGE PLAN & PROFILE
IH 35W MANAGED LANES SB
STA 1538+00 TO STA 1550+00

SCALE: 1" = 100' H, 1" = 10' V — SHEET 20 OF 28

DESIGN	FED. RD. DIV. NO.	FEDERAL AID PROJECT NO.		HIGHWAY NO.
CPY	6	(SEE TITLE SHEET)		IH 35W
GRAPHICS CPY	STATE	DISTRICT	COUNTY	SHEET NO.
CHECK CPY	TEXAS	FTW	TARRANT	1224
CHECK CPY	CONTROL 0014	SECTION 16	JOB 255, ETC.	

FILENAME: S3BMLDPP13.dgn
DRAWING DATE: 7/13/2012

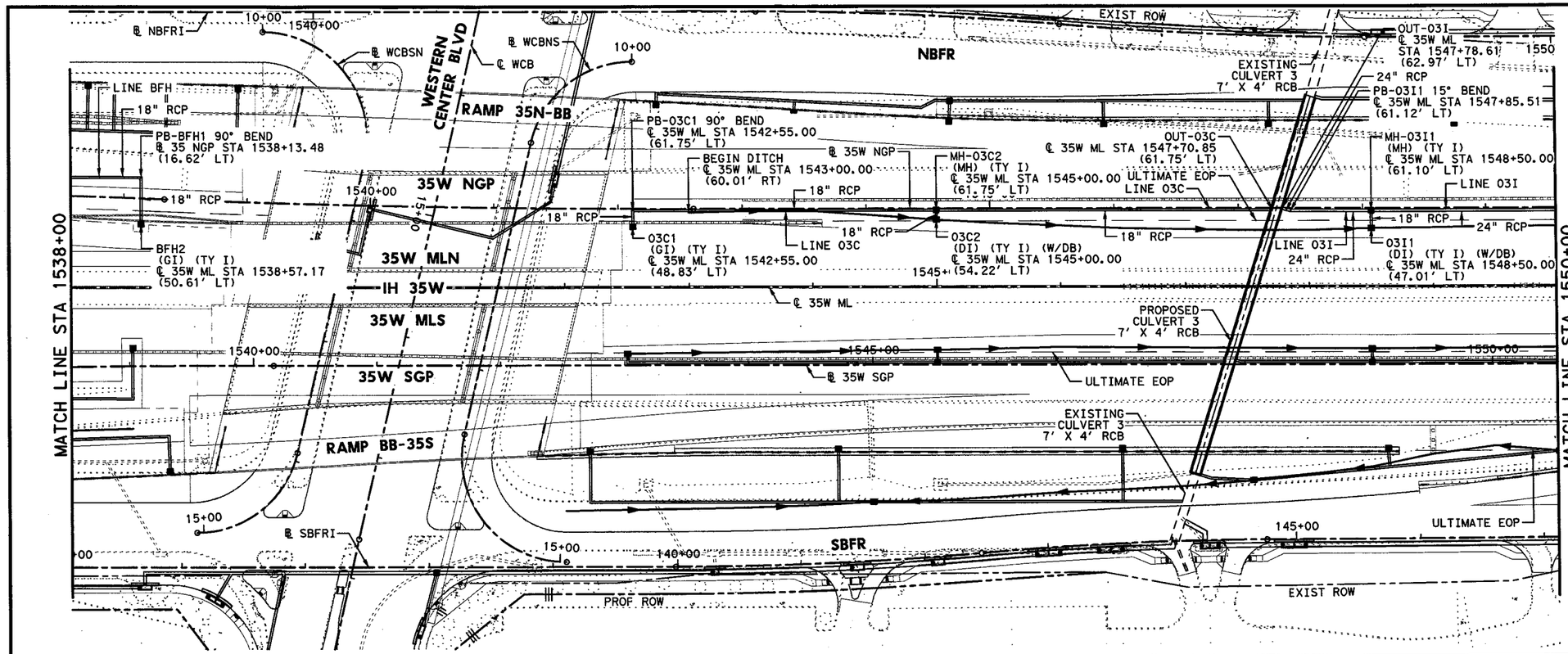

HORZ 0' 25' 50' 100'
VERT 0' 5' 10'
SCALE IN FEET

GENERAL NOTES

1. ALL LOCATIONS FOR CURB INLETS ARE SHOWN TO THE FACE OF CURB.
2. ALL LOCATIONS FOR DITCH INLETS, GRATE INLETS, AND MANHOLES ARE SHOWN TO CENTER POINT (CP) OF INLET BOX OR MANHOLE BOX.
3. REFERENCE ROADWAY PLAN AND PROFILE SHEETS FOR ADDITIONAL INFORMATION.
4. REFERENCE CULVERT PLAN AND PROFILE SHEETS FOR ADDITIONAL INFORMATION.
5. REFERENCE DRIVEWAY DETAIL SHEETS FOR ADDITIONAL INFORMATION.
6. (GI) = GRATE INLET (DI) = DROP INLET
   (CI) = CURB INLET (MH) = MANHOLE
   (TR) = TOP OF RIM (TG) = TOF OF GRATE
   (TC) = TOP OF CURB
   (W/DB) = WITH DITCH BLOCK
7. GEOPAK DRAINAGE WAS USED FOR THE STORM SEWER DESIGN COMPUTATIONS.
8. HGL REFLECTS 10 YR DESIGN STORM.
9. REFER TO CROSS-SECTIONS FOR DITCH INFORMATION.

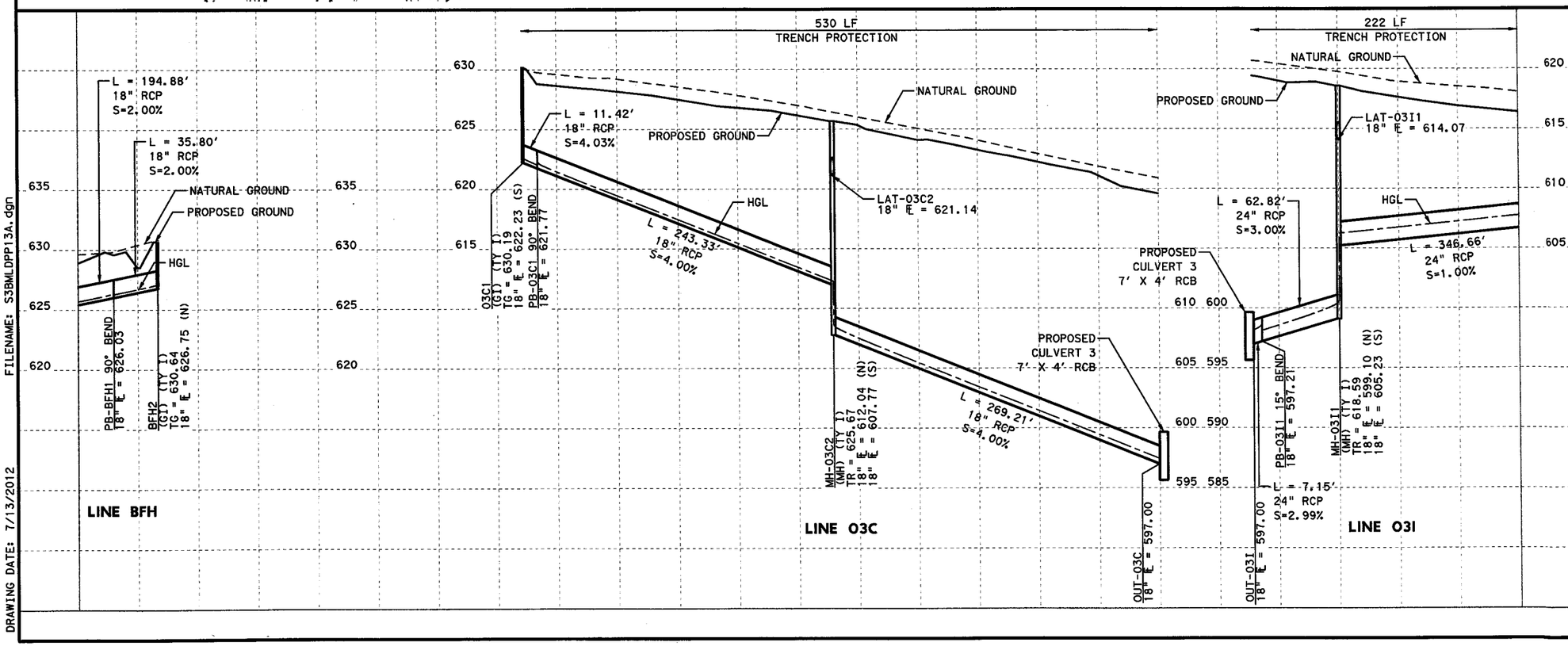

STATE OF TEXAS
THOMAS E. T. COCHILL
87665
LICENSED
PROFESSIONAL ENGINEER

Thomas E. T. Cochill
7/6/12

CP&Y, INC.
TBPE REGISTRATION NO. F-1741

Texas Department of Transportation
© 2012

IH 35W FROM NORTH TARRANT PKWY TO IH 820

DRAINAGE PLAN & PROFILE

IH 35W MANAGED LANES NB

STA 1538+00 TO STA 1550+00

SCALE: 1" = 100' H, 1" = 10' V — SHEET 21 OF 28

DESIGN	FED. RD. DIV. NO.	FEDERAL AID PROJECT NO.		HIGHWAY NO.
CPY	6	(SEE TITLE SHEET)		IH 35W
GRAPHICS	STATE	DISTRICT	COUNTY	SHEET NO.
CPY	TEXAS	FTW	TARRANT	1225
CHECK	CONTROL	SECTION	JOB	
CPY	0014	16	255, ETC.	

FILENAME: S3BMLDPP13A.dgn

DRAWING DATE: 7/13/2012

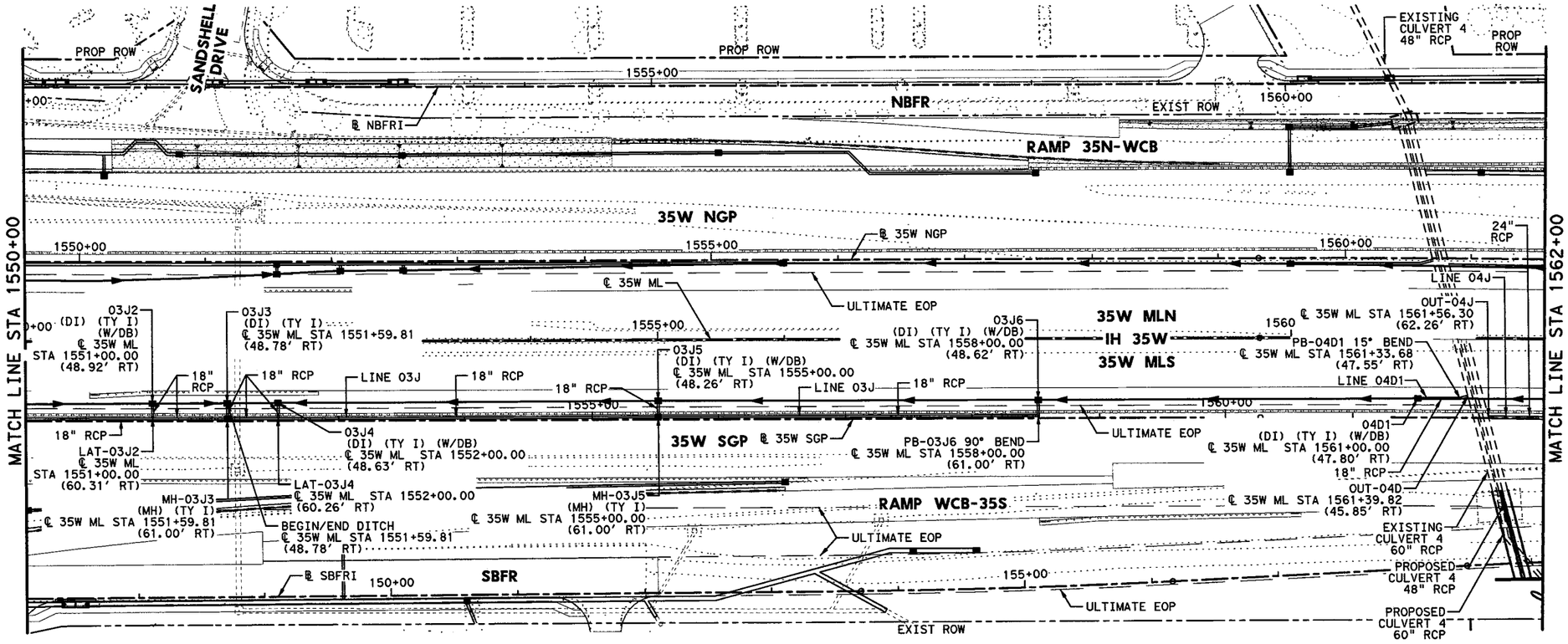

HORZ 0' 25' 50' 100'
VERT 0' 5' 10'
SCALE IN FEET

GENERAL NOTES

1. ALL LOCATIONS FOR CURB INLETS ARE SHOWN TO THE FACE OF CURB.
2. ALL LOCATIONS FOR DITCH INLETS, GRATE INLETS, AND MANHOLES ARE SHOWN TO CENTER POINT (CP) OF INLET BOX OR MANHOLE BOX.
3. REFERENCE ROADWAY PLAN AND PROFILE SHEETS FOR ADDITIONAL INFORMATION.
4. REFERENCE CULVERT PLAN AND PROFILE SHEETS FOR ADDITIONAL INFORMATION.
5. REFERENCE DRIVEWAY DETAIL SHEETS FOR ADDITIONAL INFORMATION.
6. (GI) = GRATE INLET (DI) = DROP INLET
   (CI) = CURB INLET (MH) = MANHOLE
   (TR) = TOP OF RIM (TG) = TOP OF GRATE
   (TC) = TOP OF CURB
   (W/DB) = WITH DITCH BLOCK
7. GEOPAK DRAINAGE WAS USED FOR THE STORM SEWER DESIGN COMPUTATIONS.
8. HGL REFLECTS 10 YR DESIGN STORM.
9. REFER TO CROSS-SECTIONS FOR DITCH INFORMATION.

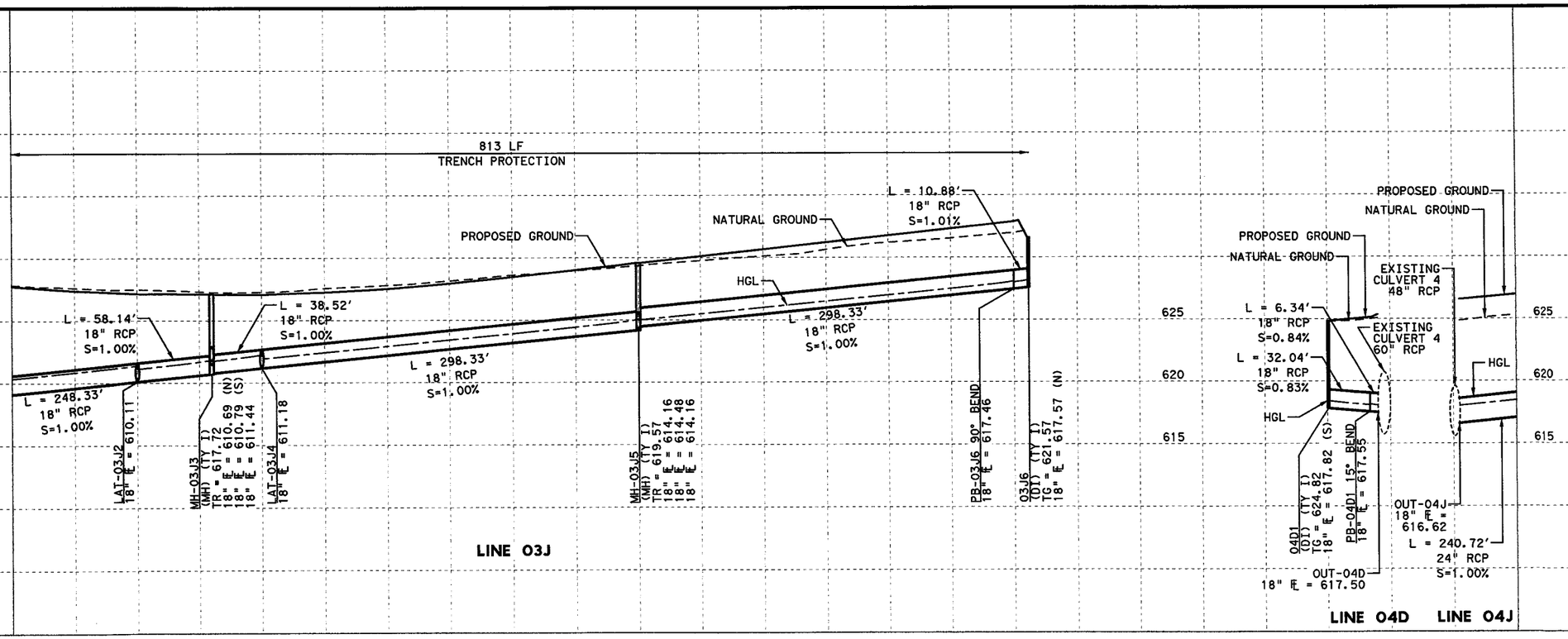

STATE OF TEXAS
THOMAS E. T. COCHILL
87665
LICENSED
PROFESSIONAL ENGINEER

Thomas E. T. Cochill
7/6/12

CP&Y, INC.
TBPE REGISTRATION NO. F-1741

Texas Department of Transportation
© 2012

IH 35W FROM NORTH TARRANT PKWY TO IH 820

DRAINAGE PLAN & PROFILE

IH 35W MANAGED LANES SB

STA 1550+00 TO STA 1562+00

SCALE: 1" = 100' H, 1" = 10' V — SHEET 22 OF 28

DESIGN	FED.RD. DIV.NO.	FEDERAL AID PROJECT NO.		HIGHWAY NO.
CPY	6	(SEE TITLE SHEET)		IH 35W
GRAPHICS CPY	STATE	DISTRICT	COUNTY	SHEET NO.
CHECK CPY	TEXAS	FTW	TARRANT	1226
CHECK CPY	CONTROL	SECTION	JOB	
	0014	16	255, ETC.	

FILENAME: S3BMLDPP14.dgn
DRAWING DATE: 7/13/2012

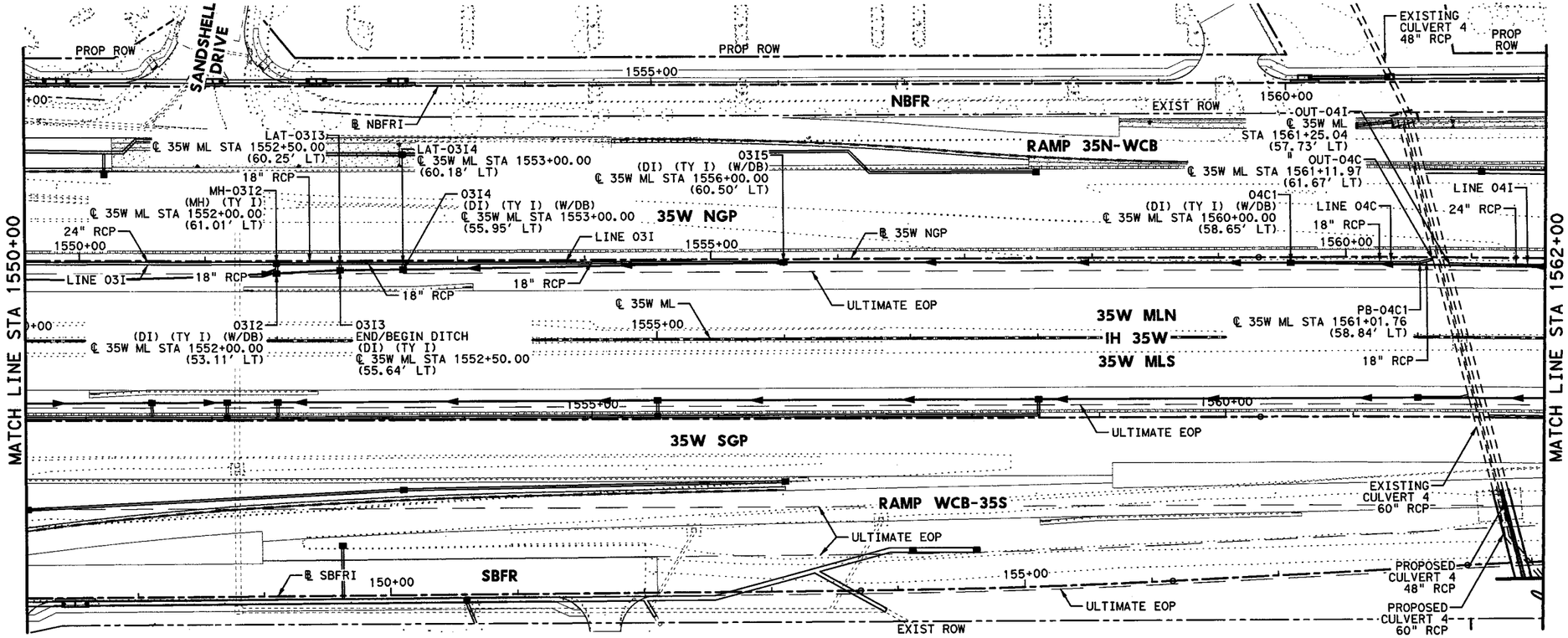

HORZ 0' 25' 50' 100'
VERT 0' 5' 10'
SCALE IN FEET

GENERAL NOTES

1. ALL LOCATIONS FOR CURB INLETS ARE SHOWN TO THE FACE OF CURB.
2. ALL LOCATIONS FOR DITCH INLETS, GRATE INLETS, AND MANHOLES ARE SHOWN TO CENTER POINT (CP) OF INLET BOX OR MANHOLE BOX.
3. REFERENCE ROADWAY PLAN AND PROFILE SHEETS FOR ADDITIONAL INFORMATION.
4. REFERENCE CULVERT PLAN AND PROFILE SHEETS FOR ADDITIONAL INFORMATION.
5. REFERENCE DRIVEWAY DETAIL SHEETS FOR ADDITIONAL INFORMATION.
6. (GI) = GRATE INLET (DI) = DROP INLET
   (CI) = CURB INLET (MH) = MANHOLE
   (TR) = TOP OF RIM (TG) = TOP OF GRATE
   (TC) = TOP OF CURB
   (W/DB) = WITH DITCH BLOCK
7. GEOPAK DRAINAGE WAS USED FOR THE STORM SEWER DESIGN COMPUTATIONS.
8. HGL REFLECTS 10 YR DESIGN STORM.
9. REFER TO CROSS-SECTIONS FOR DITCH INFORMATION.

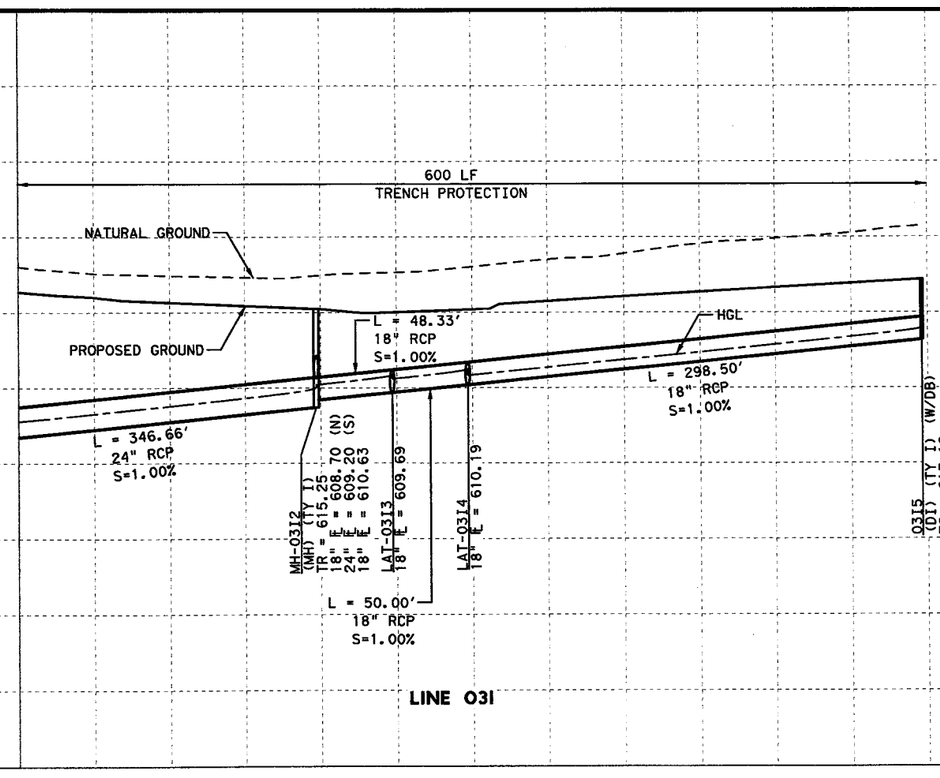

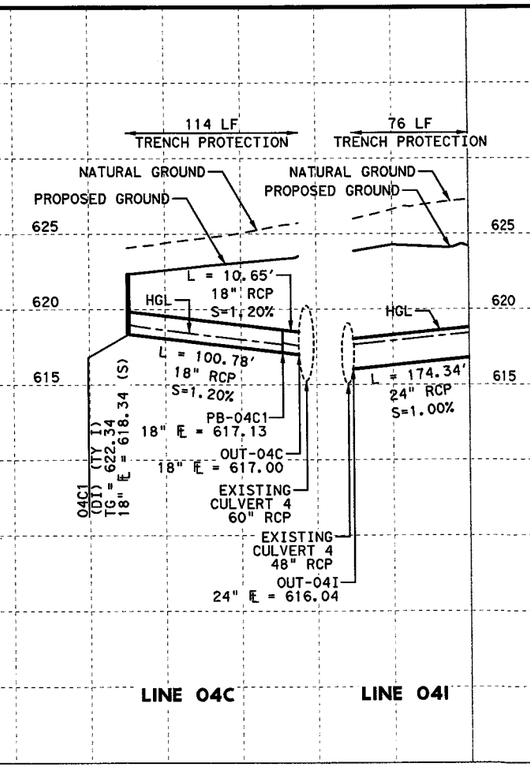

THOMAS E. T. COCHILL
87665
LICENSED
PROFESSIONAL ENGINEER
STATE OF TEXAS

Thomas E. T. Cochill
7/6/12

CP&Y, INC.
TBPE REGISTRATION NO. F-1741

Texas Department of Transportation
© 2012

IH 35W FROM NORTH TARRANT PKWY TO IH 820

DRAINAGE PLAN & PROFILE

IH 35W MANAGED LANES NB
STA 1550+00 TO STA 1562+00

SCALE: 1" = 100' H, 1" = 10' V — SHEET 23 OF 28

DESIGN	FED. RD. DIV. NO.	FEDERAL AID PROJECT NO.		HIGHWAY NO.
CPY	6	(SEE TITLE SHEET)		IH 35W
GRAPHICS CPY	STATE	DISTRICT	COUNTY	SHEET NO.
CHECK CPY	TEXAS	FTW	TARRANT	1227
CHECK CPY	CONTROL	SECTION	JOB	
	0014	16	255, ETC.	

FILENAME: S3BMLDPP14A.dgn
DRAWING DATE: 7/13/2012

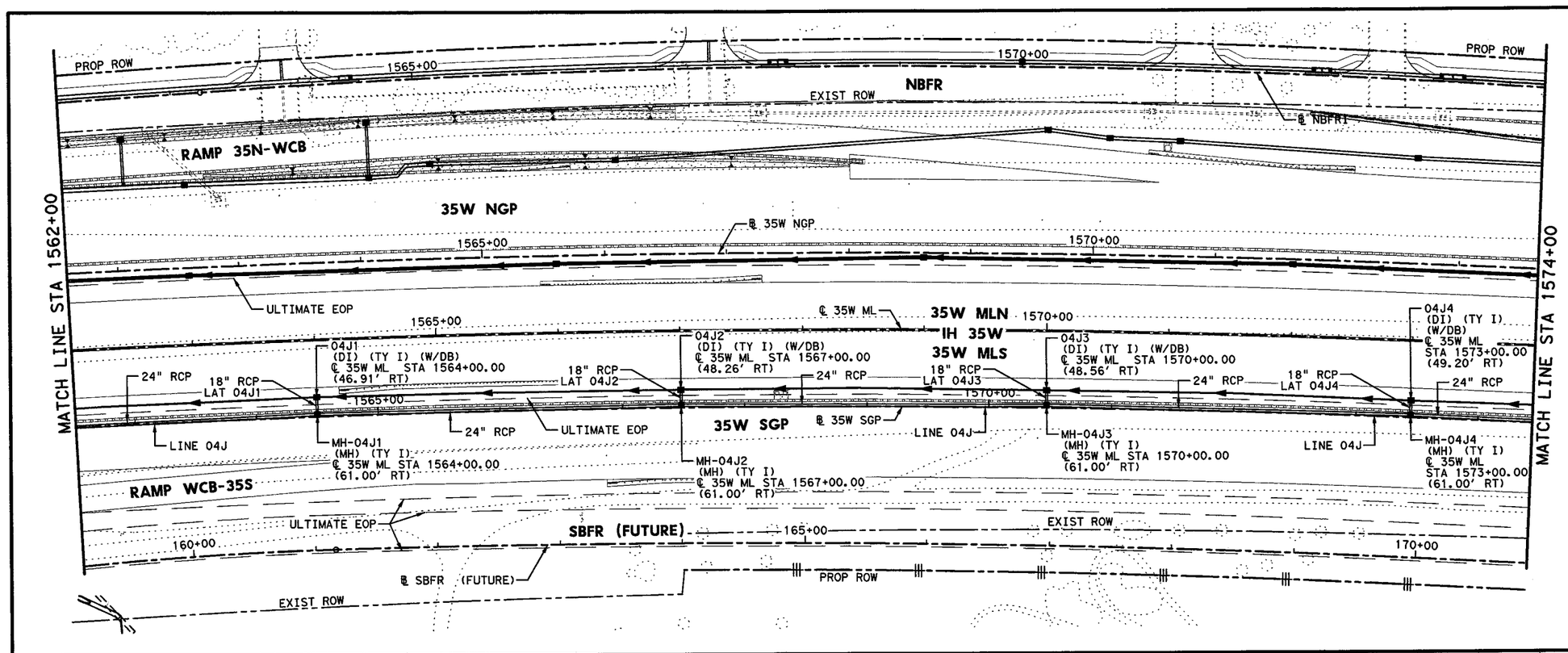

HORZ 0' 25' 50' 100'
VERT 0' 5' 10'
SCALE IN FEET

GENERAL NOTES

1. ALL LOCATIONS FOR CURB INLETS ARE SHOWN TO THE FACE OF CURB.
2. ALL LOCATIONS FOR DITCH INLETS, GRATE INLETS, AND MANHOLES ARE SHOWN TO CENTER POINT (CP) OF INLET BOX OR MANHOLE BOX.
3. REFERENCE ROADWAY PLAN AND PROFILE SHEETS FOR ADDITIONAL INFORMATION.
4. REFERENCE CULVERT PLAN AND PROFILE SHEETS FOR ADDITIONAL INFORMATION.
5. REFERENCE DRIVEWAY DETAIL SHEETS FOR ADDITIONAL INFORMATION.
6. (GI) = GRATE INLET (DI) = DROP INLET
   (CI) = CURB INLET (MH) = MANHOLE
   (TR) = TOP OF RIM (TG) = TOP OF GRATE
   (TC) = TOP OF CURB
   (W/DB) = WITH DITCH BLOCK
7. GEOPAK DRAINAGE WAS USED FOR THE STORM SEWER DESIGN COMPUTATIONS.
8. HGL REFLECTS 10 YR DESIGN STORM.
9. REFER TO CROSS-SECTIONS FOR DITCH INFORMATION.

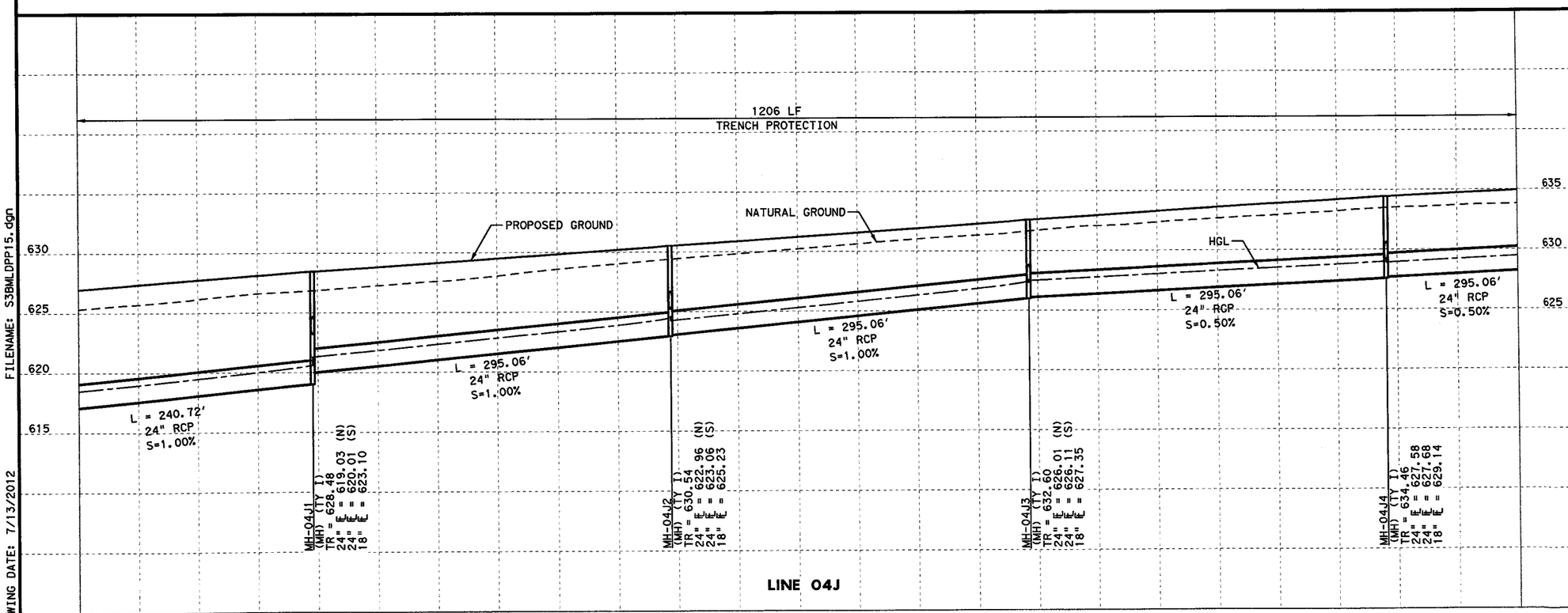

STATE OF TEXAS
THOMAS E. T. COCHILL
87665
LICENSED
PROFESSIONAL ENGINEER

Thomas E. T. Cochill
7/6/12

CP&Y, INC.
TBPE REGISTRATION NO. F-1741

Texas Department of Transportation
© 2012

IH 35W FROM NORTH TARRANT PKWY TO IH 820

DRAINAGE PLAN & PROFILE

IH 35W MANAGED LANES SB

STA 1562+00 TO STA 1574+00

SCALE: 1" = 100' H, 1" = 10' V — SHEET 24 OF 28

DESIGN	FED. RD. DIV. NO.	FEDERAL AID PROJECT NO.		HIGHWAY NO.
CPY	6	(SEE TITLE SHEET)		IH 35W
GRAPHICS CPY	STATE	DISTRICT	COUNTY	SHEET NO.
CHECK CPY	TEXAS	FTW	TARRANT	1228
CHECK CPY	CONTROL	SECTION	JOB	
	0014	16	255, ETC.	

FILENAME: S3BMLDPP15.dgn

DRAWING DATE: 7/13/2012

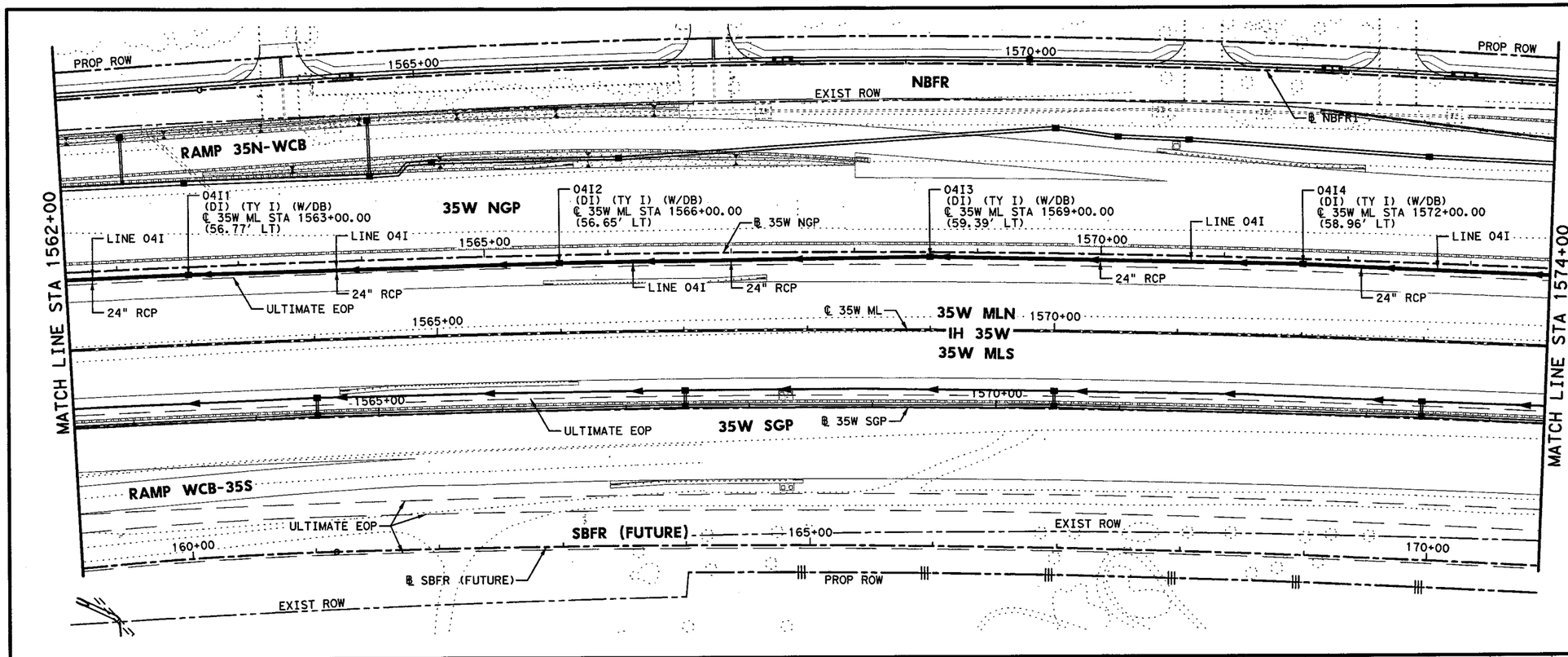

HORZ 0' 25' 50' 100'
VERT 0' 5' 10'
SCALE IN FEET

GENERAL NOTES

1. ALL LOCATIONS FOR CURB INLETS ARE SHOWN TO THE FACE OF CURB.
2. ALL LOCATIONS FOR DITCH INLETS, GRATE INLETS, AND MANHOLES ARE SHOWN TO CENTER POINT (CP) OF INLET BOX OR MANHOLE BOX.
3. REFERENCE ROADWAY PLAN AND PROFILE SHEETS FOR ADDITIONAL INFORMATION.
4. REFERENCE CULVERT PLAN AND PROFILE SHEETS FOR ADDITIONAL INFORMATION.
5. REFERENCE DRIVEWAY DETAIL SHEETS FOR ADDITIONAL INFORMATION.
6. (GI) = GRATE INLET (DI) = DROP INLET
   (CI) = CURB INLET (MH) = MANHOLE
   (TR) = TOP OF RIM (TG) = TOP OF GRATE
   (TC) = TOP OF CURB
   (W/DB) = WITH DITCH BLOCK
7. GEOPAK DRAINAGE WAS USED FOR THE STORM SEWER DESIGN COMPUTATIONS.
8. HGL REFLECTS 10 YR DESIGN STORM.
9. REFER TO CROSS-SECTIONS FOR DITCH INFORMATION.

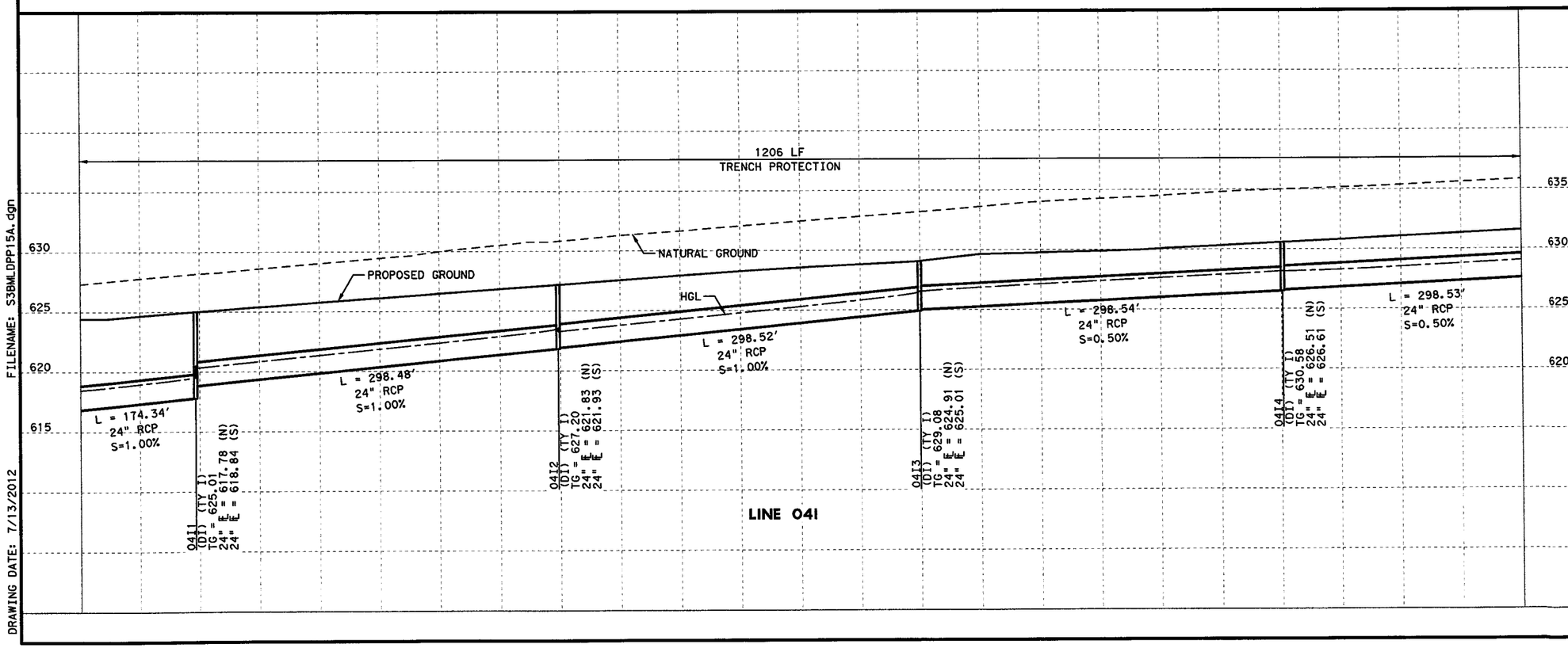

STATE OF TEXAS
THOMAS E. T. COCHILL
87665
LICENSED
PROFESSIONAL ENGINEER

Thomas E. T. Cochill
7/6/12

CP&Y, INC.
TBPE REGISTRATION NO. F-1741

Texas Department of Transportation
© 2012

IH 35W FROM NORTH TARRANT PKWY TO IH 820

DRAINAGE PLAN & PROFILE

IH 35W MANAGED LANES NB

STA 1562+00 TO STA 1574+00

SCALE: 1" = 100' H, 1" = 10' V — SHEET 25 OF 28

DESIGN	FED. RD. DIV. NO.	FEDERAL AID PROJECT NO.		HIGHWAY NO.
CPY	6	(SEE TITLE SHEET)		IH 35W
GRAPHICS	STATE	DISTRICT	COUNTY	SHEET NO.
CPY	TEXAS	FTW	TARRANT	1229
CHECK	CONTROL	SECTION	JOB	
CPY	0014	16	255, ETC.	

FILENAME: S3BMLDPP15A.dgn

DRAWING DATE: 7/13/2012

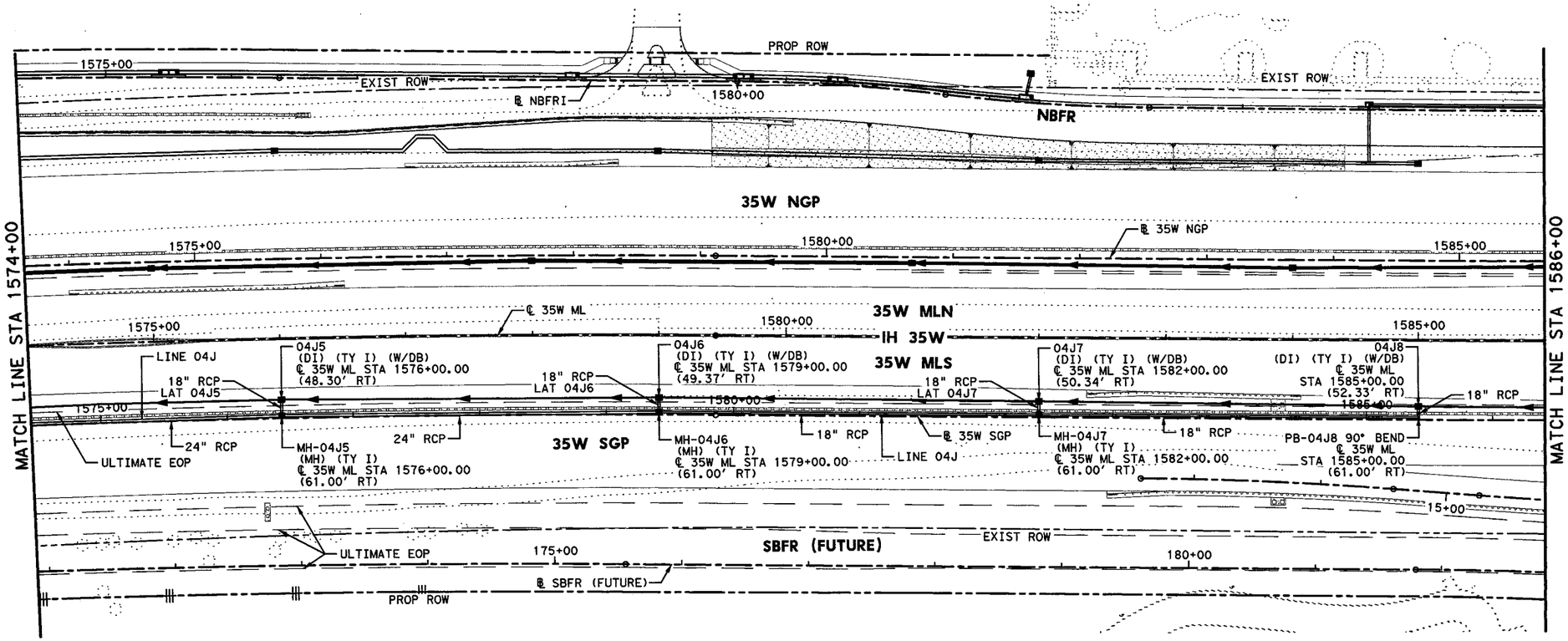

HORZ 0' 25' 50' 100'
VERT 0' 5' 10'
SCALE IN FEET

GENERAL NOTES

1. ALL LOCATIONS FOR CURB INLETS ARE SHOWN TO THE FACE OF CURB.
2. ALL LOCATIONS FOR DITCH INLETS, GRATE INLETS, AND MANHOLES ARE SHOWN TO CENTER POINT (CP) OF INLET BOX OR MANHOLE BOX.
3. REFERENCE ROADWAY PLAN AND PROFILE SHEETS FOR ADDITIONAL INFORMATION.
4. REFERENCE CULVERT PLAN AND PROFILE SHEETS FOR ADDITIONAL INFORMATION.
5. REFERENCE DRIVEWAY DETAIL SHEETS FOR ADDITIONAL INFORMATION.
6. (GI) = GRATE INLET (DI) = DROP INLET
   (CI) = CURB INLET (MH) = MANHOLE
   (TR) = TOP OF RIM (TG) = TOP OF GRATE
   (TC) = TOP OF CURB
   (W/DB) = WITH DITCH BLOCK
7. GEOPAK DRAINAGE WAS USED FOR THE STORM SEWER DESIGN COMPUTATIONS.
8. HGL REFLECTS 10 YR DESIGN STORM.
9. REFER TO CROSS-SECTIONS FOR DITCH INFORMATION.

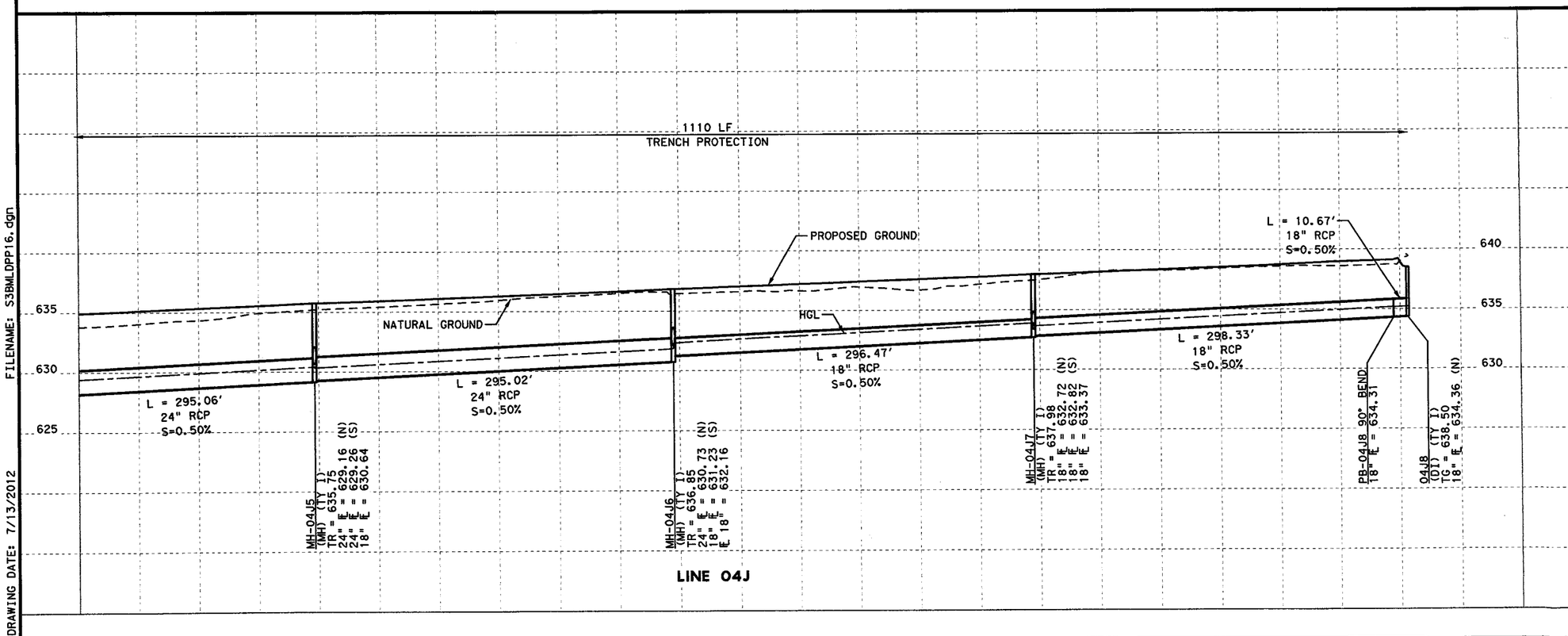

STATE OF TEXAS
THOMAS E. T. COCHILL
87665
LICENSED
PROFESSIONAL ENGINEER

Thomas E. T. Cochill
7/6/12

CP&Y, INC.
TBPE REGISTRATION NO. F-1741

Texas Department of Transportation
© 2012

IH 35W FROM NORTH TARRANT PKWY TO IH 820

DRAINAGE PLAN & PROFILE

IH 35W MANAGED LANES SB

STA 1574+00 TO STA 1586+00

SCALE: 1" = 100' H, 1" = 10' V — SHEET 26 OF 28

DESIGN	FED. RD. DIV. NO.	FEDERAL AID PROJECT NO.		HIGHWAY NO.
CPY	6	(SEE TITLE SHEET)		IH 35W
GRAPHICS CPY	STATE	DISTRICT	COUNTY	SHEET NO.
CHECK CPY	TEXAS	FTW	TARRANT	1230
CHECK CPY	CONTROL	SECTION	JOB	
	0014	16	255, ETC.	

FILENAME: S3BMLDPP16.dgn

DRAWING DATE: 7/13/2012

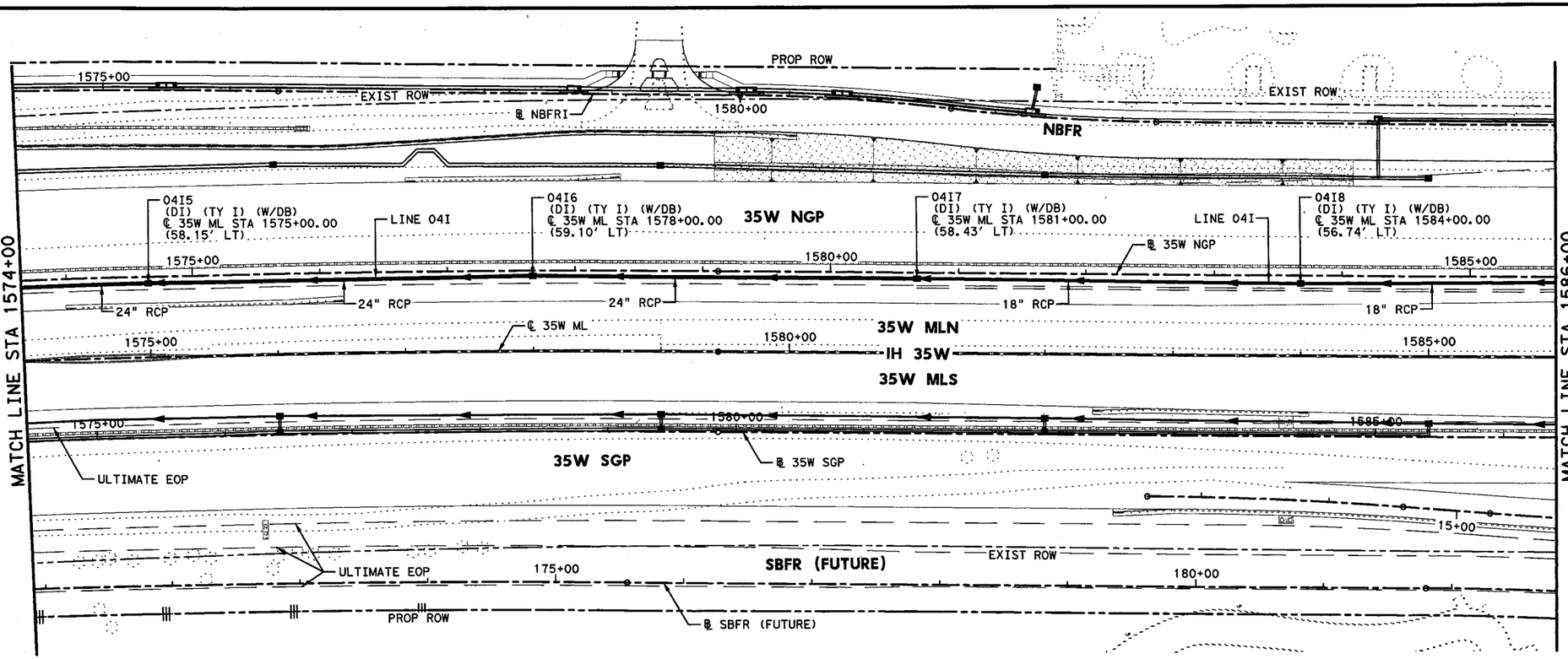

HORZ 0' 25' 50' 100'
VERT 0' 5' 10'
SCALE IN FEET

GENERAL NOTES

1. ALL LOCATIONS FOR CURB INLETS ARE SHOWN TO THE FACE OF CURB.
2. ALL LOCATIONS FOR DITCH INLETS, GRATE INLETS, AND MANHOLES ARE SHOWN TO CENTER POINT (CP) OF INLET BOX OR MANHOLE BOX.
3. REFERENCE ROADWAY PLAN AND PROFILE SHEETS FOR ADDITIONAL INFORMATION.
4. REFERENCE CULVERT PLAN AND PROFILE SHEETS FOR ADDITIONAL INFORMATION.
5. REFERENCE DRIVEWAY DETAIL SHEETS FOR ADDITIONAL INFORMATION.
6. (GI) = GRATE INLET (DI) = DROP INLET
   (CI) = CURB INLET (MH) = MANHOLE
   (TR) = TOP OF RIM (TG) = TOP OF GRATE
   (TC) = TOP OF CURB
   (W/DB) = WITH DITCH BLOCK
7. GEOPAK DRAINAGE WAS USED FOR THE STORM SEWER DESIGN COMPUTATIONS.
8. HGL REFLECTS 10 YR DESIGN STORM.
9. REFER TO CROSS-SECTIONS FOR DITCH INFORMATION.

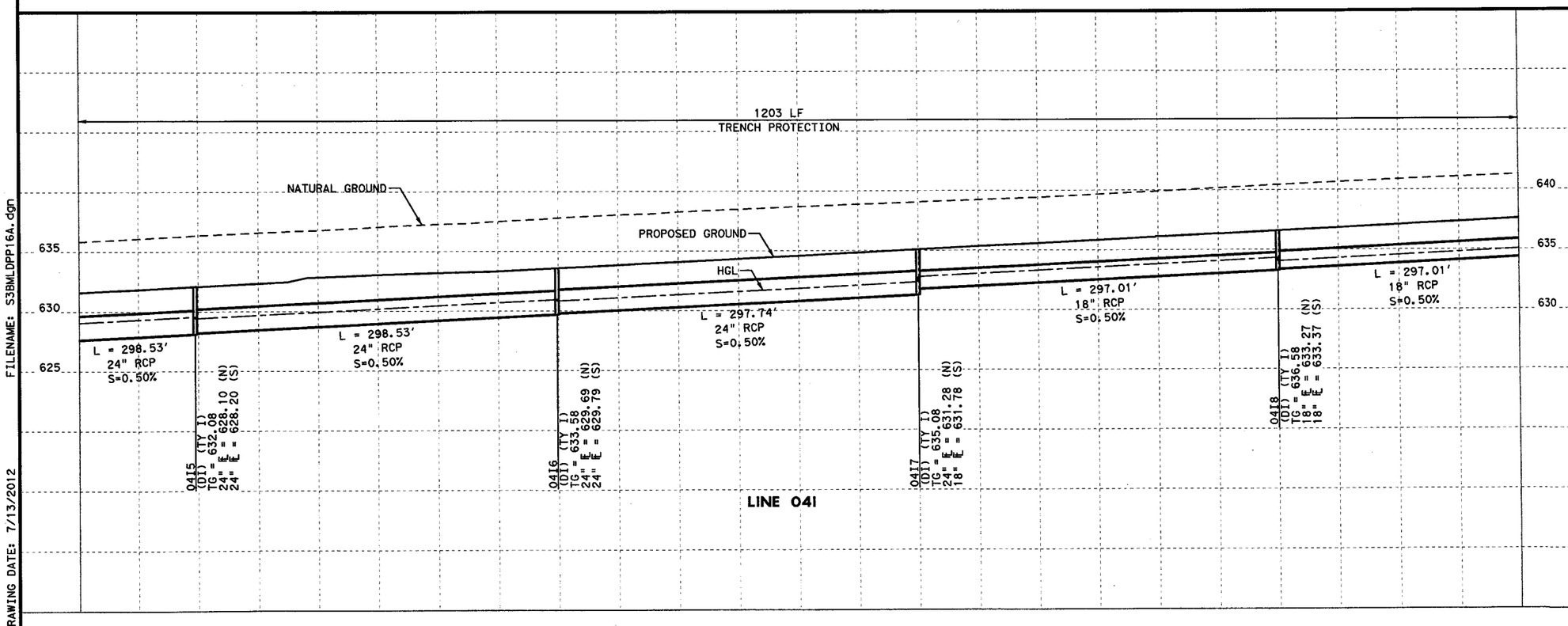

STATE OF TEXAS
THOMAS E. T. COCHILL
87665
LICENSED
PROFESSIONAL ENGINEER

Thomas E. T. Cochill
7/6/12

CP&Y, INC.
TBPE REGISTRATION NO. F-1741

Texas Department of Transportation
© 2012

IH 35W FROM NORTH TARRANT PKWY TO IH 820

DRAINAGE PLAN & PROFILE

IH 35W MANAGED LANES NB

STA 1574+00 TO STA 1586+00

SCALE: 1" = 100' H, 1" = 10' V — SHEET 27 OF 28

DESIGN	FED. RD. DIV. NO.	FEDERAL AID PROJECT NO.		HIGHWAY NO.
CPY	6	(SEE TITLE SHEET)		IH 35W
GRAPHICS CPY	STATE	DISTRICT	COUNTY	SHEET NO.
CHECK CPY	TEXAS	FTW	TARRANT	1231
CHECK CPY	CONTROL	SECTION	JOB	
	0014	16	255, ETC.	

FILENAME: S3BMLDPP16A.dgn

DRAWING DATE: 7/13/2012

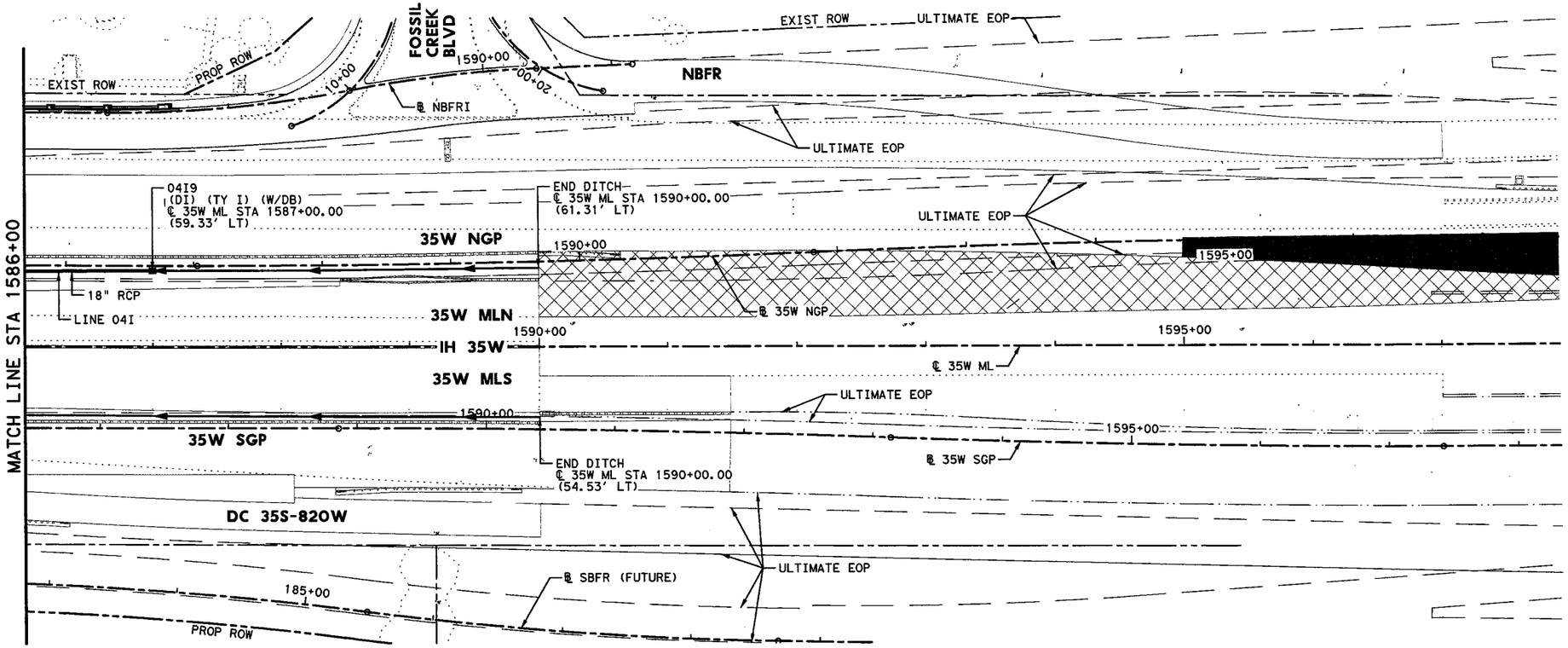

HORZ 0' 25' 50' 100'
VERT 0' 5' 10'
SCALE IN FEET

GENERAL NOTES

1. ALL LOCATIONS FOR CURB INLETS ARE SHOWN TO THE FACE OF CURB.
2. ALL LOCATIONS FOR DITCH INLETS, GRATE INLETS, AND MANHOLES ARE SHOWN TO CENTER POINT (CP) OF INLET BOX OR MANHOLE BOX.
3. REFERENCE ROADWAY PLAN AND PROFILE SHEETS FOR ADDITIONAL INFORMATION.
4. REFERENCE CULVERT PLAN AND PROFILE SHEETS FOR ADDITIONAL INFORMATION.
5. REFERENCE DRIVEWAY DETAIL SHEETS FOR ADDITIONAL INFORMATION.
6. (GI) = GRATE INLET (DI) = DROP INLET
   (CI) = CURB INLET (MH) = MANHOLE
   (TR) = TOP OF RIM (TG) = TOP OF GRATE
   (TC) = TOP OF CURB
   (W/DB) = WITH DITCH BLOCK
7. GEOPAK DRAINAGE WAS USED FOR THE STORM SEWER DESIGN COMPUTATIONS.
8. HGL REFLECTS 10 YR DESIGN STORM.
9. REFER TO CROSS-SECTIONS FOR DITCH INFORMATION.

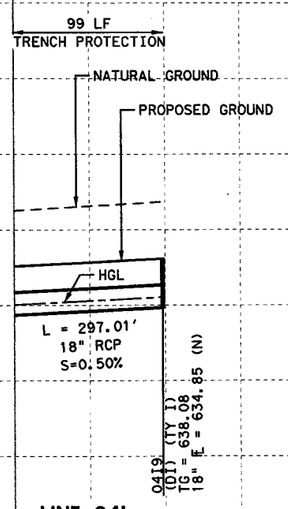

STATE OF TEXAS
THOMAS E. T. COCHILL
87665
LICENSED
PROFESSIONAL ENGINEER

Thomas E. T. Cochill
7/6/12

CP&Y, INC.
TBPE REGISTRATION NO. F-1741

Texas Department of Transportation
© 2012

IH 35W FROM NORTH TARRANT PKWY TO IH 820

DRAINAGE PLAN & PROFILE

IH 35W MANAGED LANES NB

STA 1586+00 TO END PROJECT

SCALE: 1" = 100' H, 1" = 10' V — SHEET 28 OF 28

DESIGN	FED. RD. DIV. NO.	FEDERAL AID PROJECT NO.		HIGHWAY NO.
CPY	6	(SEE TITLE SHEET)		IH 35W
GRAPHICS CPY	STATE	DISTRICT	COUNTY	SHEET NO.
CHECK CPY	TEXAS	FTW	TARRANT	1232
CHECK	CONTROL	SECTION	JOB	
CPY	0014	16	255, ETC.	

FILENAME: S3BMLDPP17.dgn

DRAWING DATE: 7/13/2012

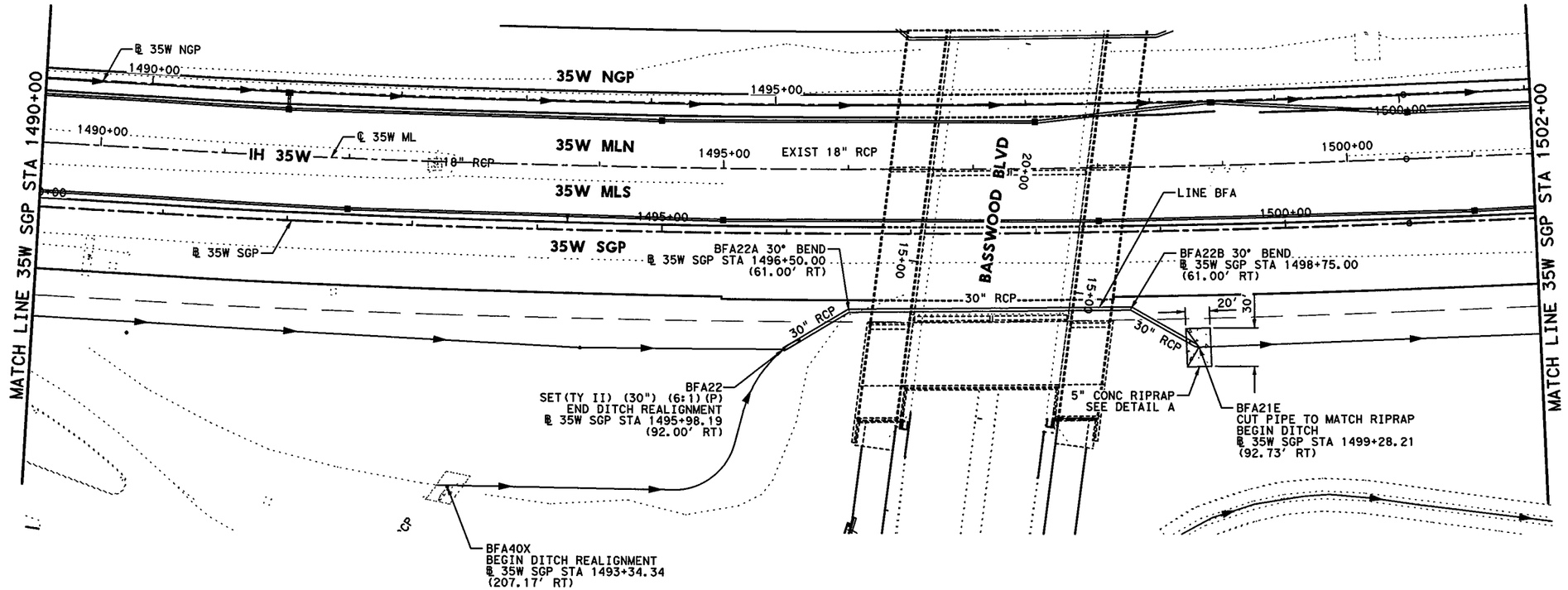

HORZ 0' 25' 50' 100'

SCALE IN FEET

GENERAL NOTES

1. ALL LOCATIONS FOR CURB INLETS ARE SHOWN TO THE FACE OF CURB.
2. ALL LOCATIONS FOR DITCH INLETS, GRATE INLETS, AND MANHOLES ARE SHOWN TO CENTER POINT (CP) OF INLET BOX OR MANHOLE BOX.
3. REFERENCE ROADWAY PLAN AND PROFILE SHEETS FOR ADDITIONAL INFORMATION.
4. REFERENCE CULVERT PLAN AND PROFILE SHEETS FOR ADDITIONAL INFORMATION.
5. REFERENCE DRIVEWAY DETAIL SHEETS FOR ADDITIONAL INFORMATION.
6. (GI) = GRATE INLET (DI) = DROP INLET
   (CI) = CURB INLET (MH) = MANHOLE
   (TR) = TOP OF RIM (TG) = TOP OF GRATE
   (TC) = TOP OF CURB
   (W/DB) = WITH DITCH BLOCK
7. GEOPAK DRAINAGE WAS USED FOR THE STORM SEWER DESIGN COMPUTATIONS.
8. HGL REFLECTS 10 YR DESIGN STORM.
9. REFER TO CROSS-SECTIONS FOR DITCH INFORMATION.

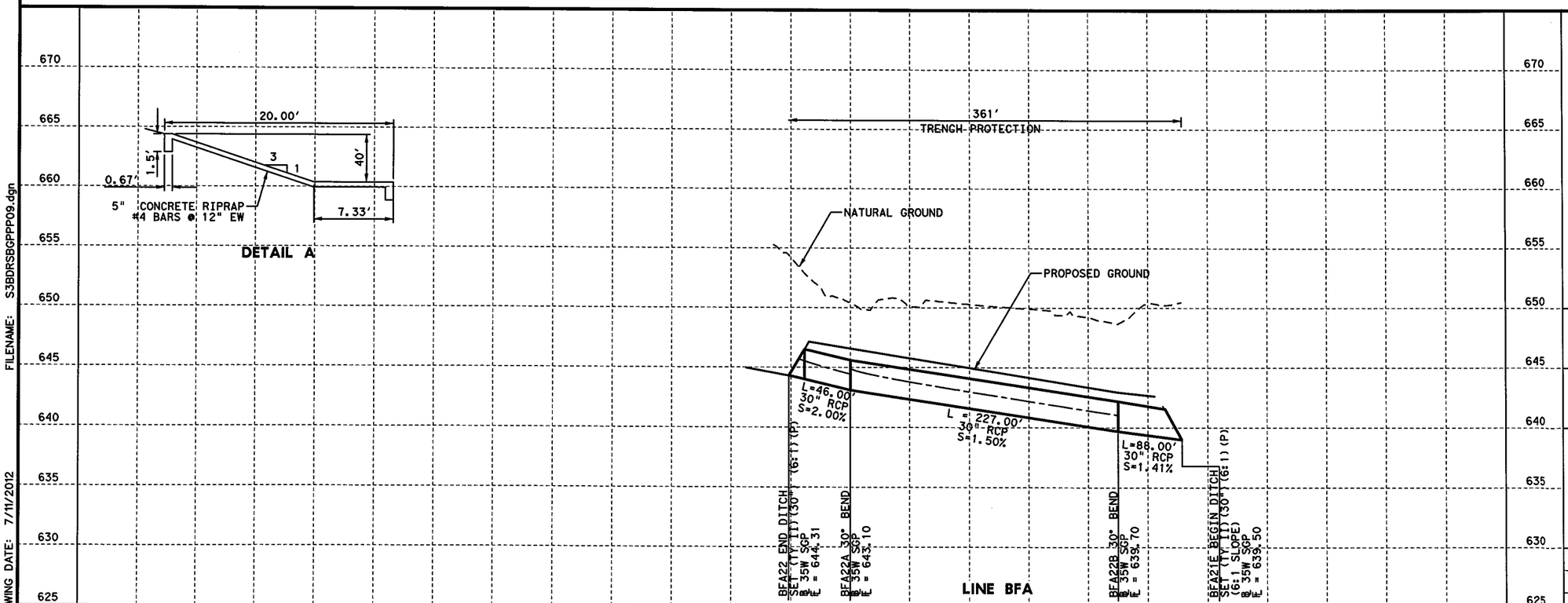

STATE OF TEXAS
B. VANDERWALT
81580
LICENSED
PROFESSIONAL ENGINEER
7/11/2012 P.E.

I. S. ENGINEERS, LLC

TBPE REG. # F-11657

Texas Department of Transportation

© 2012

IH 35W FROM NORTH TARRANT PKWY TO IH 820

DRAINAGE PLAN & PROFILE

GENERAL PURPOSE LANES SB

STA 1490+00 TO STA 1502+00

SCALE: 1" = 100' H, 1" = 10' V

SHEET 1 OF 16

DESIGN	FED.RD. DIV.NO.	FEDERAL AID PROJECT NO.		HIGHWAY NO.
BV	6	(SEE TITLE SHEET)		IH 35W
GRAPHICS	STATE	DISTRICT	COUNTY	SHEET NO.
ZS	TEXAS	FTW	TARRANT	1233
CHECK	CONTROL	SECTION	JOB	
SY	0014	16	255, ETC.	
CHECK				
MNM				

FILENAME: S3BDRSBGPPP09.dgn

DRAWING DATE: 7/11/2012

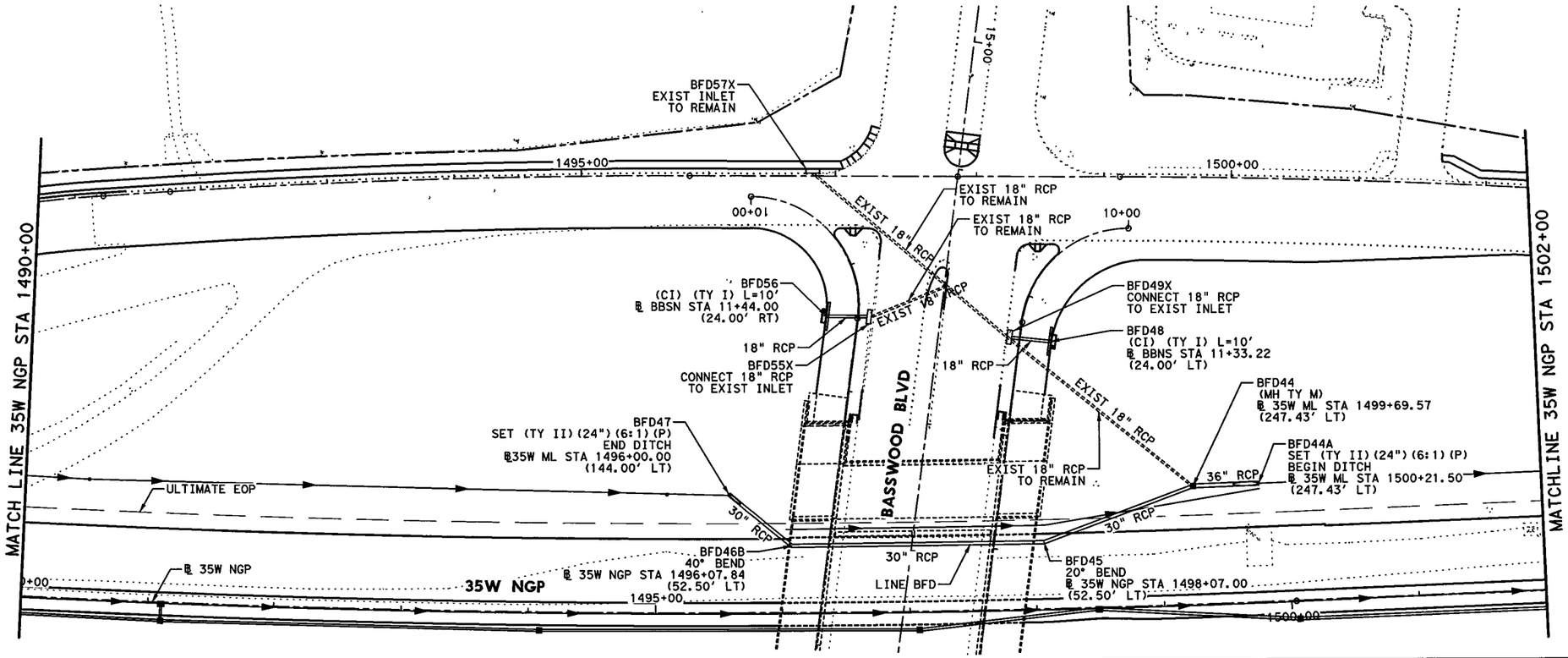

HORZ 0' 25' 50' 100'

SCALE IN FEET

GENERAL NOTES

1. ALL LOCATIONS FOR CURB INLETS ARE SHOWN TO THE FACE OF CURB.
2. ALL LOCATIONS FOR DITCH INLETS, GRATE INLETS, AND MANHOLES ARE SHOWN TO CENTER POINT (CP) OF INLET BOX OR MANHOLE BOX.
3. REFERENCE ROADWAY PLAN AND PROFILE SHEETS FOR ADDITIONAL INFORMATION.
4. REFERENCE CULVERT PLAN AND PROFILE SHEETS FOR ADDITIONAL INFORMATION.
5. REFERENCE DRIVEWAY DETAIL SHEETS FOR ADDITIONAL INFORMATION.
6. (GI) = GRATE INLET (DI) = DROP INLET
   (CI) = CURB INLET (MH) = MANHOLE
   (TR) = TOP OF RIM (TG) = TOP OF GRATE
   (TC) = TOP OF CURB
   (W/DB) = WITH DITCH BLOCK
7. GEOPAK DRAINAGE WAS USED FOR THE STORM SEWER DESIGN COMPUTATIONS.
8. HGL REFLECTS 10 YR DESIGN STORM.
9. REFER TO CROSS-SECTIONS FOR DITCH INFORMATION.

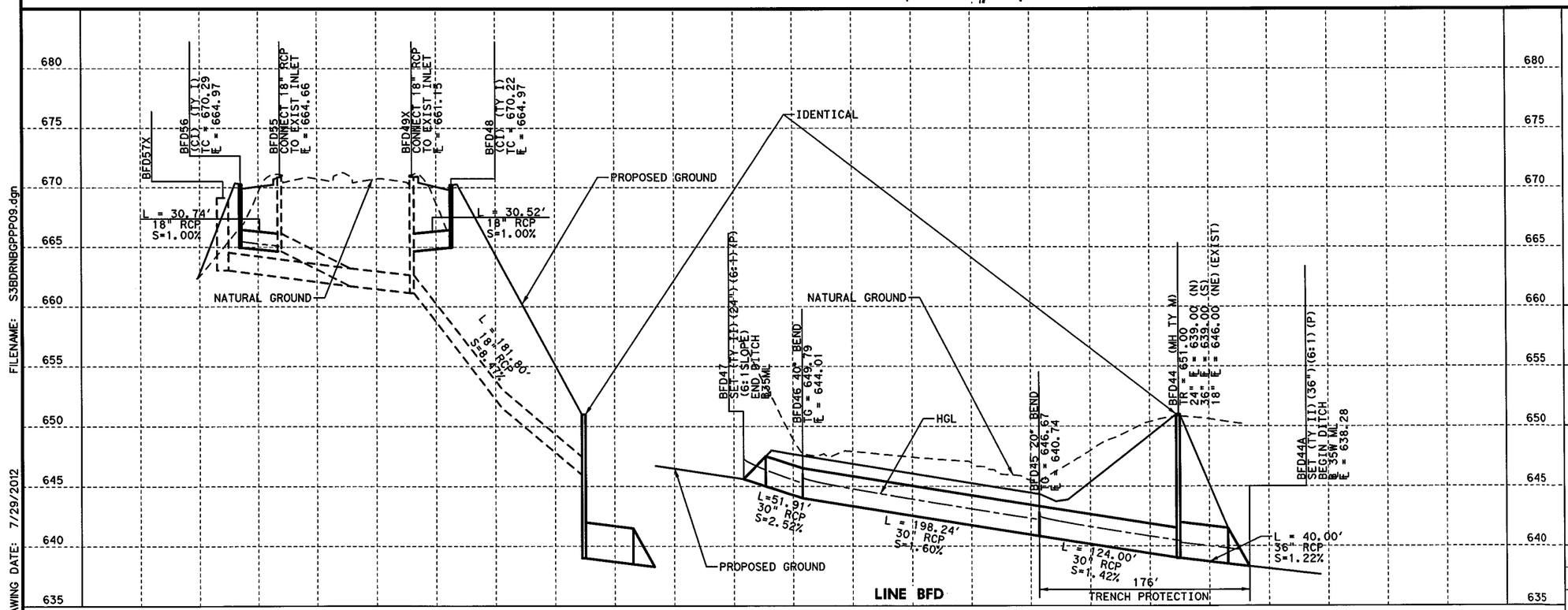

STATE OF TEXAS
B. VANDERWALT
81580
LICENSED
PROFESSIONAL ENGINEER
P.E.
7/30/2012

I. S. ENGINEERS, LLC
TBPE REG. # F-11657

Texas Department of Transportation
© 2012

IH 35W FROM NORTH TARRANT PKWY TO IH 820

DRAINAGE PLAN & PROFILE
GENERAL PURPOSE LANES NB
STA 1490+00 TO STA 1502+00

SCALE: 1" = 100' H, 1" = 10' V — SHEET 2 OF 16

DESIGN	FED.RD. DIV.NO.	FEDERAL AID PROJECT NO.		HIGHWAY NO.
BV	6	(SEE TITLE SHEET)		IH 35W
GRAPHICS ZS	STATE	DISTRICT	COUNTY	SHEET NO.
CHECK SY	TEXAS	FTW	TARRANT	1234
CHECK MNM	CONTROL 0014	SECTION 16	JOB 255, ETC.	

FILENAME: S3BDRNBGPPP09.dgn
DRAWING DATE: 7/29/2012

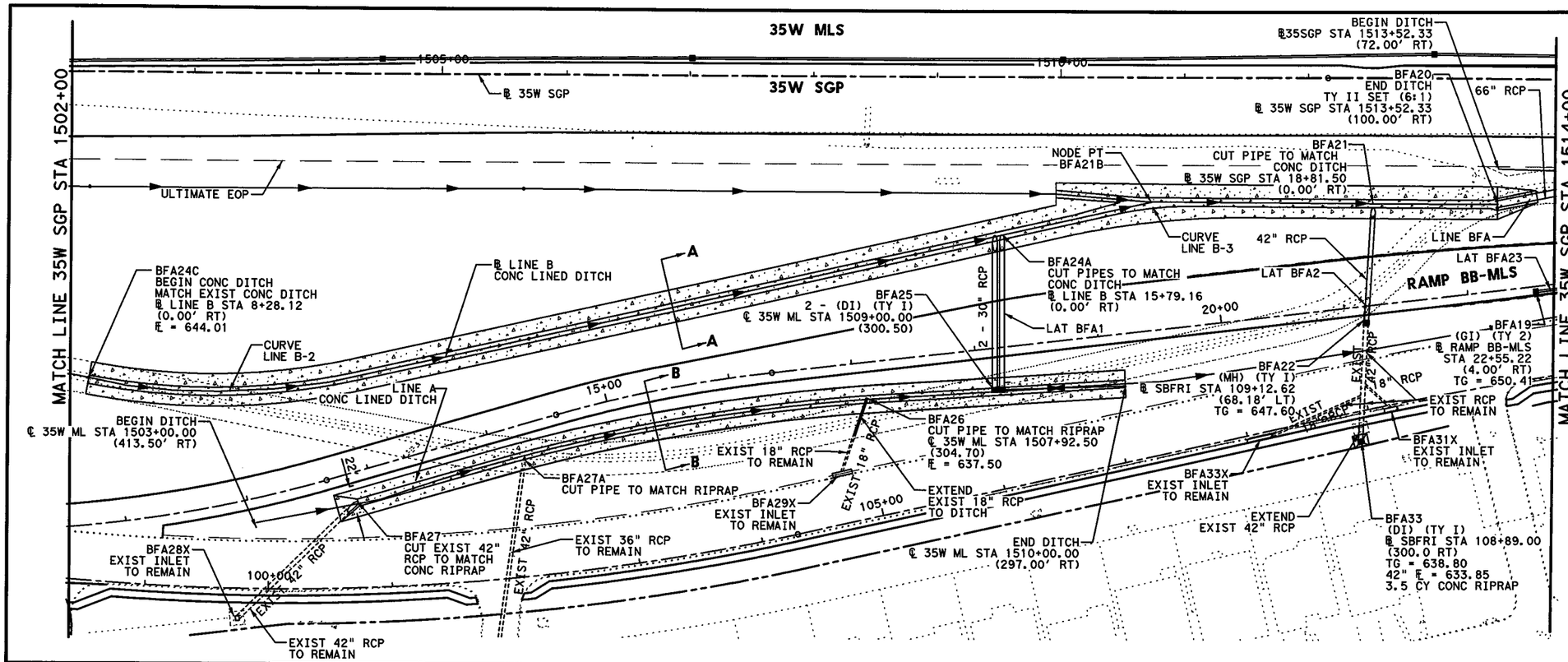

GENERAL NOTES

1. ALL LOCATIONS FOR CURB INLETS ARE SHOWN TO THE FACE OF CURB.
2. ALL LOCATIONS FOR DITCH INLETS, GRATE INLETS, AND MANHOLES ARE SHOWN TO CENTER POINT (CP) OF INLET BOX OR MANHOLE BOX.
3. REFERENCE ROADWAY PLAN AND PROFILE SHEETS FOR ADDITIONAL INFORMATION.
4. REFERENCE CULVERT PLAN AND PROFILE SHEETS FOR ADDITIONAL INFORMATION.
5. REFERENCE DRIVEWAY DETAIL SHEETS FOR ADDITIONAL INFORMATION.
6. (GI) = GRATE INLET (DI) = DROP INLET
   (CI) = CURB INLET (MH) = MANHOLE
   (TR) = TOP OF RIM (TG) = TOP OF GRATE
   (TC) = TOP OF CURB
   (W/DB) = WITH DITCH BLOCK
7. GEOPAK DRAINAGE WAS USED FOR THE STORM SEWER DESIGN COMPUTATIONS.
8. HGL REFLECTS 10 YR DESIGN STORM.
9. REFER TO CROSS-SECTIONS FOR DITCH INFORMATION.

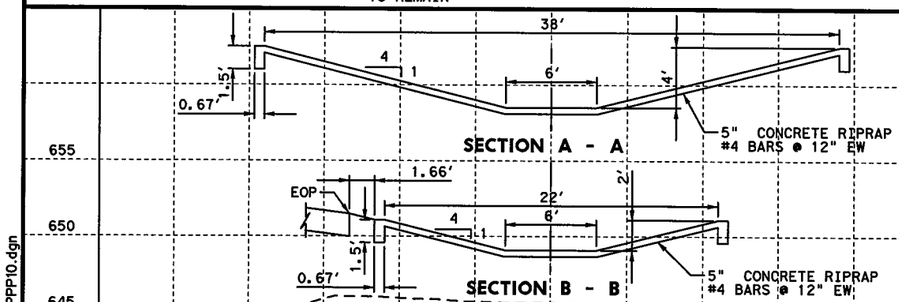

		STA	Y COORDINATE	X COORDINATE	DELTA	TANGENT	LENGTH	RADIUS
CURVE LINEB-2	CC		7,002,862.8697	2,332,343.6770				
	PC	8+28.17	7,002,859.0718	2,331,790.3900				
	PI	9+39.30	7,002,747.9400	2,331,791.1528	22° 42' 52" LT	111.135'	219.352'	553.300'
	PT	10+47.52	7,002,645.7205	2,331,834.7692				
CURVE LINEB-3	CC		7,001,842.8922	2,331,430.7323				
	PC	16+27.37	7,002,112.3960	2,332,062.3371				
	PI	17+04.98	7,002,041.0100	2,332,092.7979	12° 53' 49" RT	77.615'	154.573'	686.700'
	PT	17+81.94	7,001,964.6229	2,332,106.5566				
LINEB09	POT	20+23.90	7,001,726.4932	2,332,149.4490				

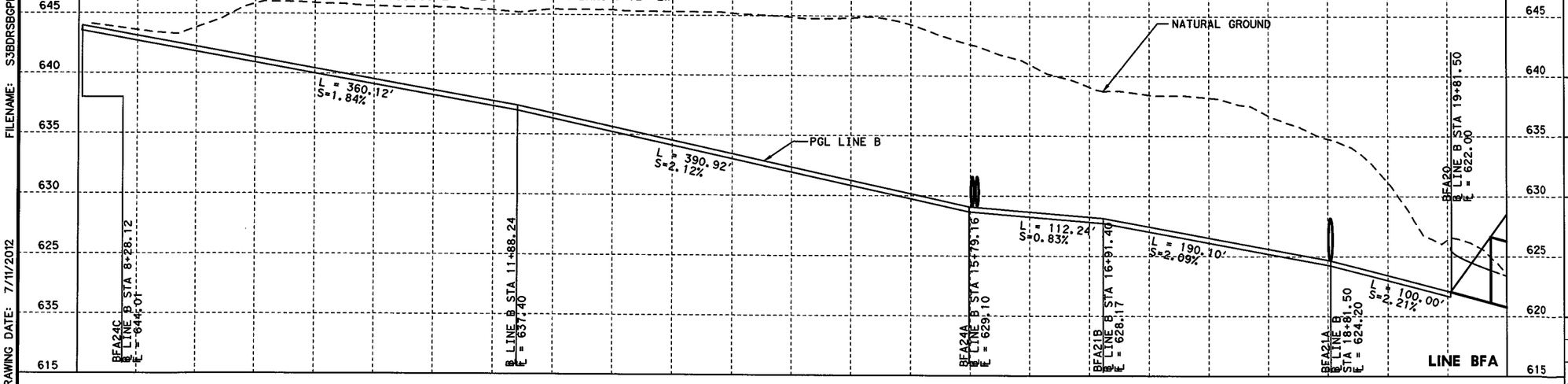

STATE OF TEXAS
B. VANDERWALT
81580
LICENSED
PROFESSIONAL ENGINEER
7/11/2012

I. S. ENGINEERS, LLC
TBPE REG. # F-11657

Texas Department of Transportation
© 2012

IH 35W FROM NORTH TARRANT PKWY TO IH 820

DRAINAGE PLAN & PROFILE
GENERAL PURPOSE LANES SB
STA 1502+00 TO STA 1514+00

SCALE: 1" = 100'H, 1" = 10'V — SHEET 3 OF 16

DESIGN	FED.RD. DIV.NO.	FEDERAL AID PROJECT NO.		HIGHWAY NO.
BV	6	(SEE TITLE SHEET)		IH 35W
GRAPHICS	STATE	DISTRICT	COUNTY	SHEET NO.
ZS	TEXAS	FTW	TARRANT	1235
CHECK	CONTROL	SECTION	JOB	
SY / MNM	0014	16	255, ETC.	

FILENAME: S3BDRSBGPPP10.dgn
DRAWING DATE: 7/11/2012

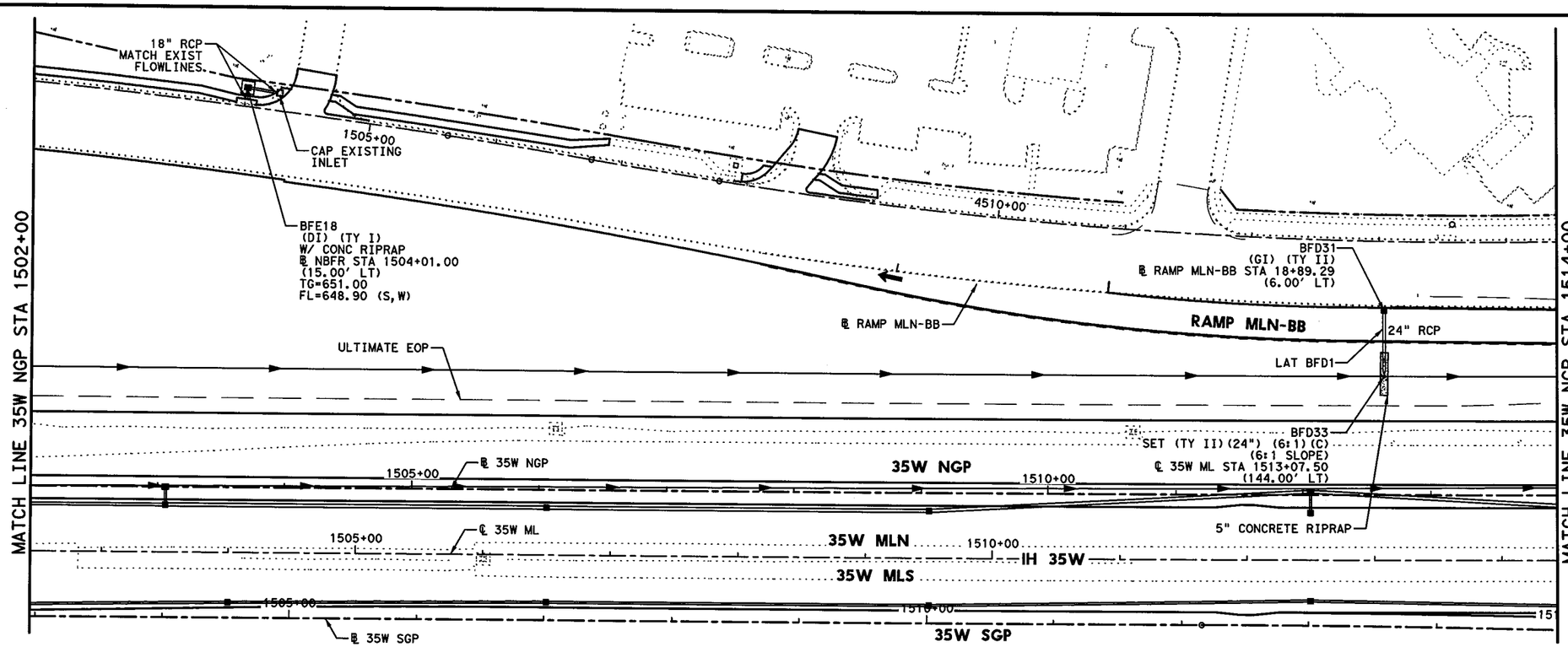

HORZ 0' 25' 50' 100'

SCALE IN FEET

GENERAL NOTES

1. ALL LOCATIONS FOR CURB INLETS ARE SHOWN TO THE FACE OF CURB.
2. ALL LOCATIONS FOR DITCH INLETS, GRATE INLETS, AND MANHOLES ARE SHOWN TO CENTER POINT (CP) OF INLET BOX OR MANHOLE BOX.
3. REFERENCE ROADWAY PLAN AND PROFILE SHEETS FOR ADDITIONAL INFORMATION.
4. REFERENCE CULVERT PLAN AND PROFILE SHEETS FOR ADDITIONAL INFORMATION.
5. REFERENCE DRIVEWAY DETAIL SHEETS FOR ADDITIONAL INFORMATION.
6. (GI) = GRATE INLET (DI) = DROP INLET
   (CI) = CURB INLET (MH) = MANHOLE
   (TR) = TOP OF RIM (TG) = TOP OF GRATE
   (TC) = TOP OF CURB
   (W/DB) = WITH DITCH BLOCK
7. GEOPAK DRAINAGE WAS USED FOR THE STORM SEWER DESIGN COMPUTATIONS.
8. HGL REFLECTS 10 YR DESIGN STORM.
9. REFER TO CROSS-SECTIONS FOR DITCH INFORMATION.

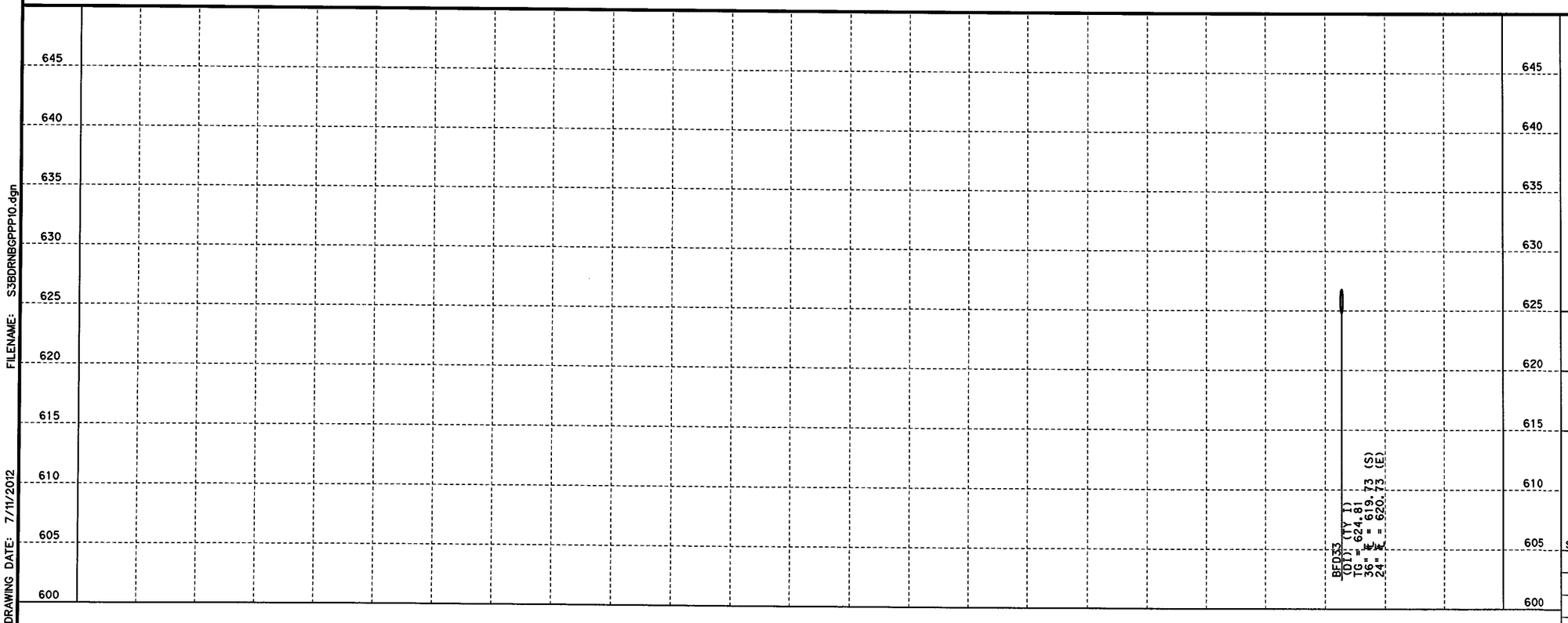

STATE OF TEXAS
B. VANDERWALT
81580
LICENSED
PROFESSIONAL ENGINEER

P.E.
7/11/2012

I. S. ENGINEERS, LLC

TBPE REG. # F-11657

Texas Department of Transportation

© 2012

IH 35W FROM NORTH TARRANT PKWY TO IH 820

DRAINAGE PLAN & PROFILE

GENERAL PURPOSE LANES NB

STA 1502+00 TO STA 1514+00

SCALE: 1" = 100' H, 1" = 10' V

SHEET 4 OF 16

DESIGN	FED.RD. DIV.NO.	FEDERAL AID PROJECT NO.		HIGHWAY NO.
BV	6	(SEE TITLE SHEET)		IH 35W
GRAPHICS	STATE	DISTRICT	COUNTY	SHEET NO.
ZS	TEXAS	FTW	TARRANT	
CHECK	CONTROL	SECTION	JOB	
SY	0014	16	255, ETC.	1236
CHECK				
MNM				

FILENAME: S3BDRNBGPPP10.dgn

DRAWING DATE: 7/11/2012

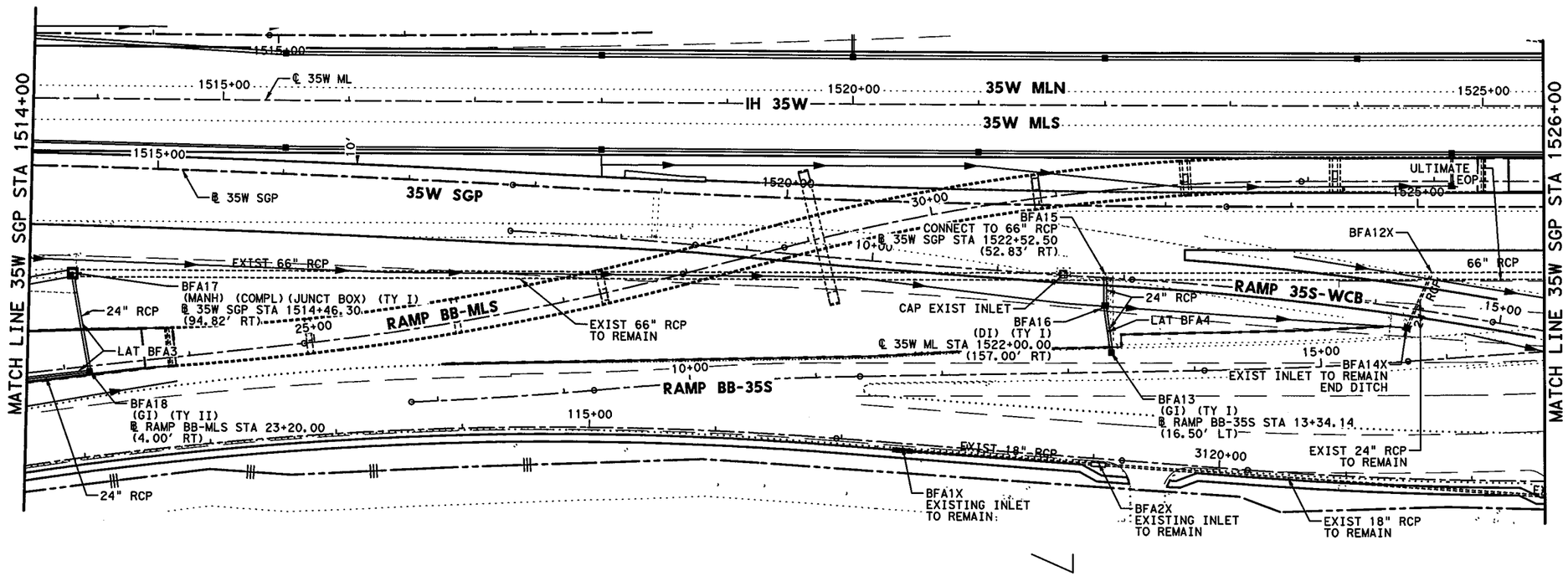

HORZ 0' 25' 50' 100'

SCALE IN FEET

GENERAL NOTES

1. ALL LOCATIONS FOR CURB INLETS ARE SHOWN TO THE FACE OF CURB.
2. ALL LOCATIONS FOR DITCH INLETS, GRATE INLETS, AND MANHOLES ARE SHOWN TO CENTER POINT (CP) OF INLET BOX OR MANHOLE BOX.
3. REFERENCE ROADWAY PLAN AND PROFILE SHEETS FOR ADDITIONAL INFORMATION.
4. REFERENCE CULVERT PLAN AND PROFILE SHEETS FOR ADDITIONAL INFORMATION.
5. REFERENCE DRIVEWAY DETAIL SHEETS FOR ADDITIONAL INFORMATION.
6. (GI) = GRATE INLET (DI) = DROP INLET
   (CI) = CURB INLET (MH) = MANHOLE
   (TR) = TOP OF RIM (TG) = TOP OF GRATE
   (TC) = TOP OF CURB
   (W/DB) = WITH DITCH BLOCK
7. GEOPAK DRAINAGE WAS USED FOR THE STORM SEWER DESIGN COMPUTATIONS.
8. HGL REFLECTS 10 YR DESIGN STORM.
9. REFER TO CROSS-SECTIONS FOR DITCH INFORMATION.

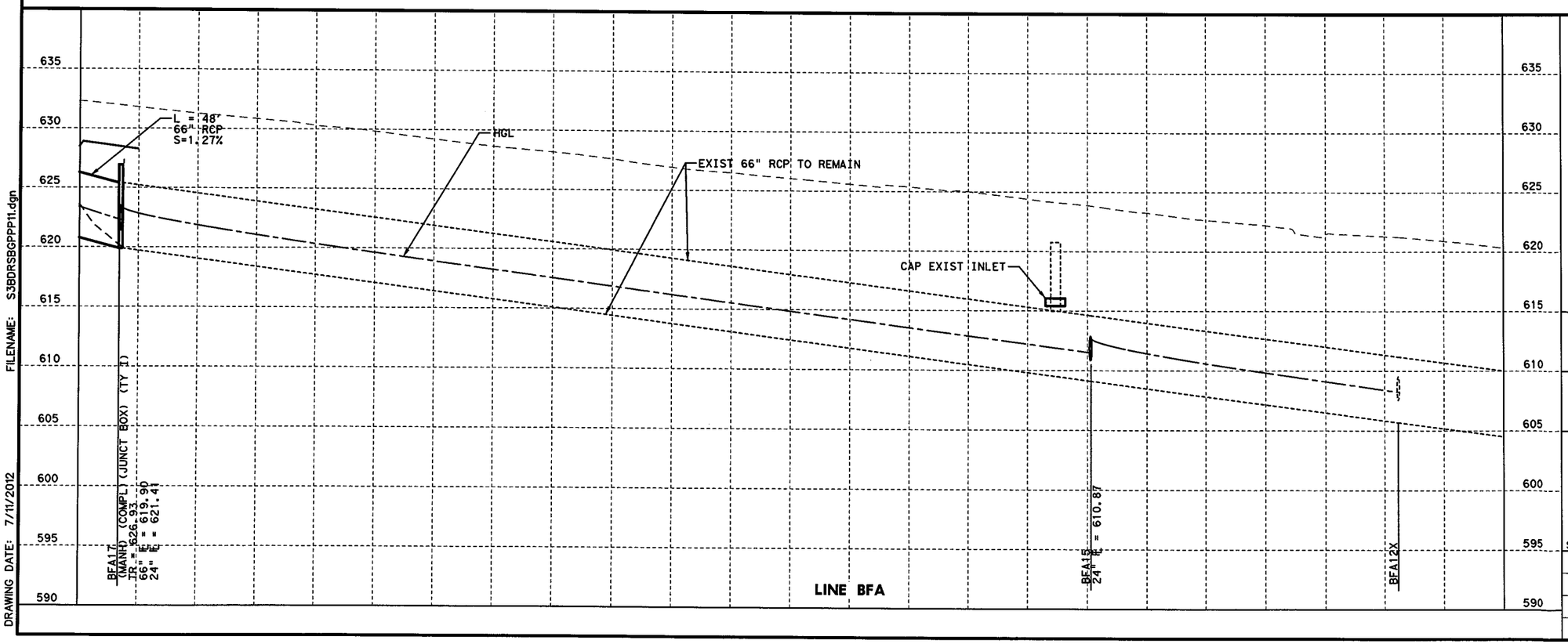

STATE OF TEXAS
B. VANDERWALT
81580
LICENSED
PROFESSIONAL ENGINEER
7/11/2012 P.E.

I. S. ENGINEERS, LLC
TBPE REG. # F-11657

Texas Department of Transportation
© 2012

IH 35W FROM NORTH TARRANT PKWY TO IH 820

DRAINAGE PLAN & PROFILE
GENERAL PURPOSE LANES SB
STA 1514+00 TO STA 1526+00

SCALE: 1" = 100' H, 1" = 10' V — SHEET 5 OF 16

DESIGN	FED.RD. DIV.NO.	FEDERAL AID PROJECT NO.		HIGHWAY NO.
BV	6	(SEE TITLE SHEET)		IH 35W
GRAPHICS	STATE	DISTRICT	COUNTY	SHEET NO.
ZS	TEXAS	FTW	TARRANT	
CHECK	CONTROL	SECTION	JOB	
SY	0014	16	255, ETC.	1237
CHECK				
MNM				

FILENAME: S3BDRSBGPPP11.dgn
DRAWING DATE: 7/11/2012

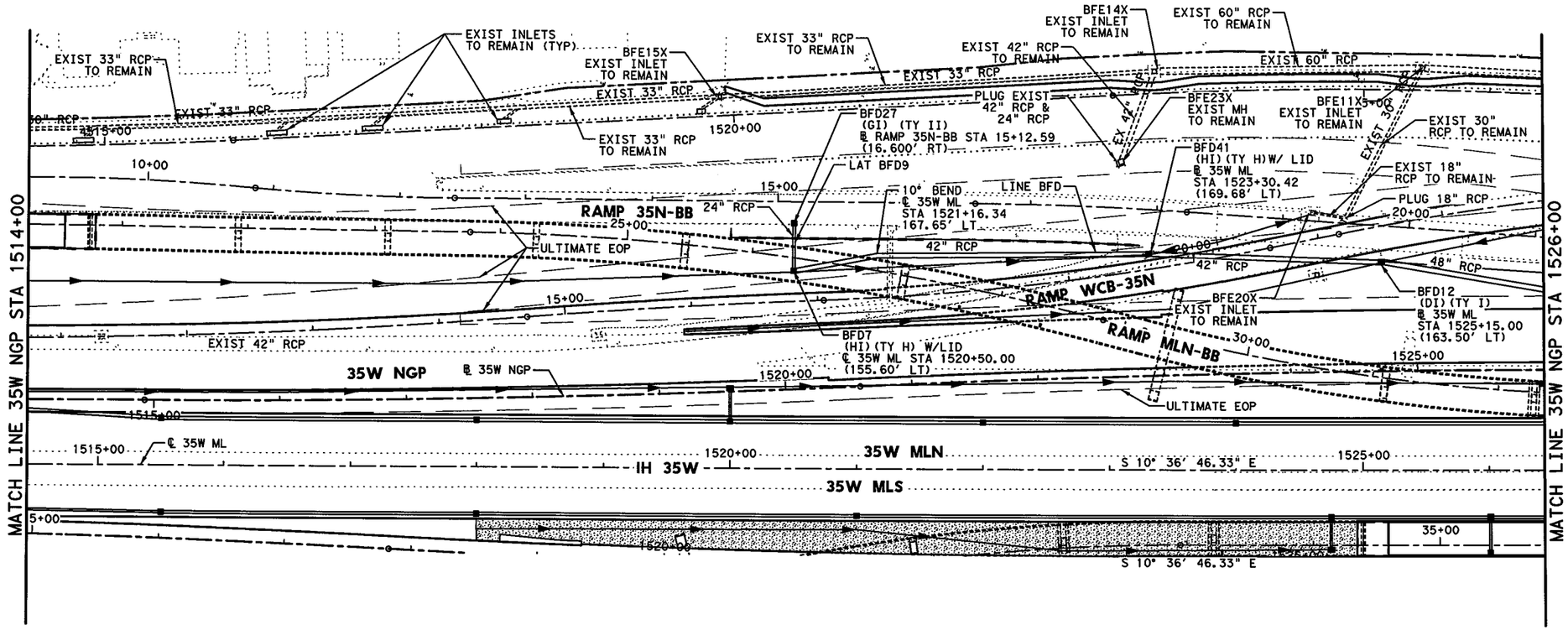

HORZ 0' 25' 50' 100'

SCALE IN FEET

GENERAL NOTES

1. ALL LOCATIONS FOR CURB INLETS ARE SHOWN TO THE FACE OF CURB.
2. ALL LOCATIONS FOR DITCH INLETS, GRATE INLETS, AND MANHOLES ARE SHOWN TO CENTER POINT (CP) OF INLET BOX OR MANHOLE BOX.
3. REFERENCE ROADWAY PLAN AND PROFILE SHEETS FOR ADDITIONAL INFORMATION.
4. REFERENCE CULVERT PLAN AND PROFILE SHEETS FOR ADDITIONAL INFORMATION.
5. REFERENCE DRIVEWAY DETAIL SHEETS FOR ADDITIONAL INFORMATION.
6. (GI) = GRATE INLET (DI) = DROP INLET
   (CI) = CURB INLET (MH) = MANHOLE
   (TR) = TOP OF RIM (TG) = TOP OF GRATE
   (TC) = TOP OF CURB
   (W/DB) = WITH DITCH BLOCK
7. GEOPAK DRAINAGE WAS USED FOR THE STORM SEWER DESIGN COMPUTATIONS.
8. HGL REFLECTS 10 YR DESIGN STORM.
9. REFER TO CROSS-SECTIONS FOR DITCH INFORMATION.

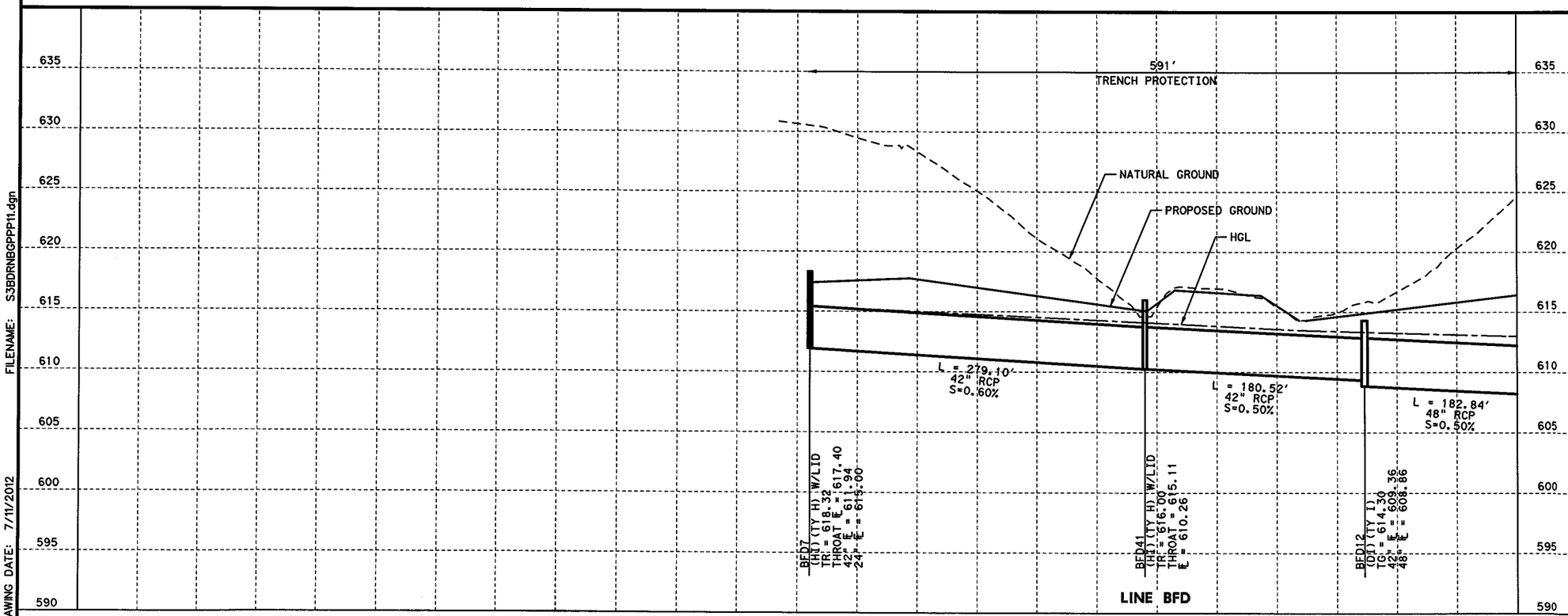

STATE OF TEXAS
B. VANDERWALT
81580
LICENSED
PROFESSIONAL ENGINEER

Bernard Vanderwalt P.E.
7/11/2012

I. S. ENGINEERS, LLC
TBPE REG. # F-11657

Texas Department of Transportation
© 2012

IH 35W FROM NORTH TARRANT PKWY TO IH 820

DRAINAGE PLAN & PROFILE

GENERAL PURPOSE LANES NB

STA 1514+00 TO STA 1526+00

SCALE: 1" = 100' H, 1" = 10' V — SHEET 6 OF 16

DESIGN	FED.RD. DIV.NO.	FEDERAL AID PROJECT NO.		HIGHWAY NO.
BV	6	(SEE TITLE SHEET)		IH 35W
GRAPHICS	STATE	DISTRICT	COUNTY	SHEET NO.
ZS	TEXAS	FTW	TARRANT	1238
CHECK	CONTROL	SECTION	JOB	
SY	0014	16	255, ETC.	
CHECK				
MNM				

FILENAME: S3BDRNBGPPP11.dgn

DRAWING DATE: 7/11/2012

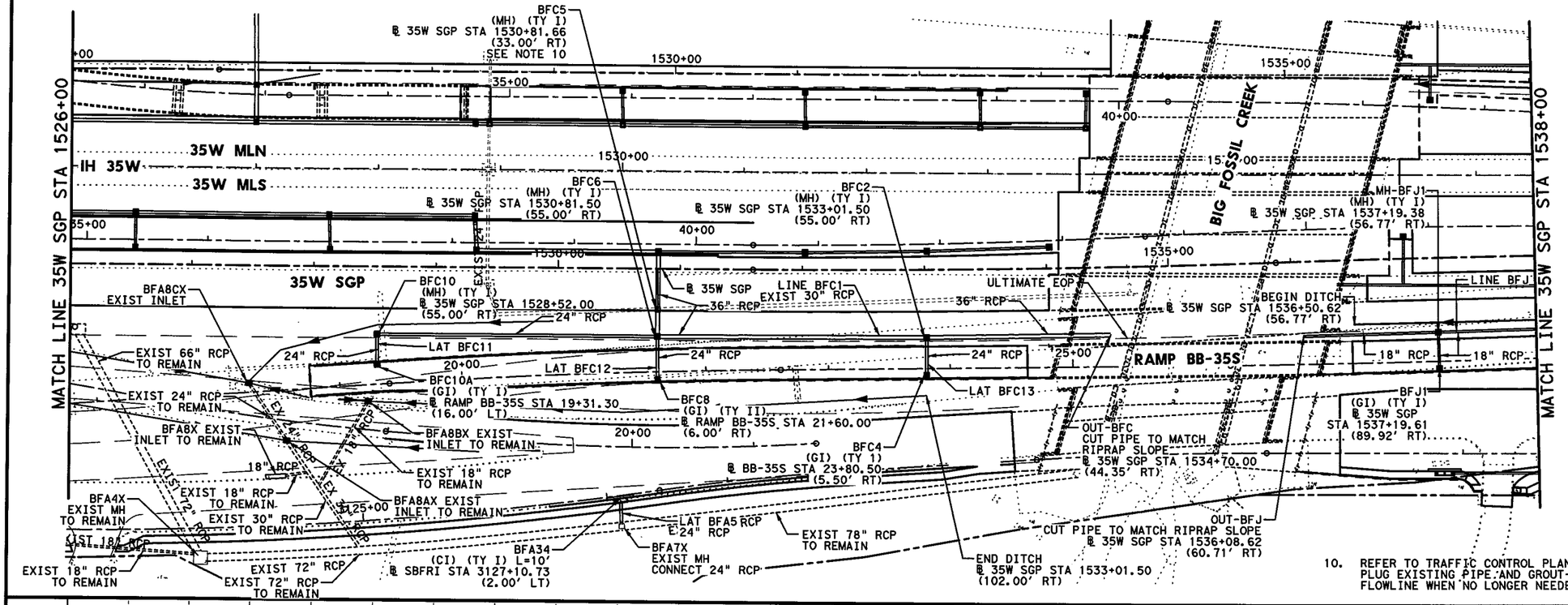

GENERAL NOTES

1. ALL LOCATIONS FOR CURB INLETS ARE SHOWN TO THE FACE OF CURB.
2. ALL LOCATIONS FOR DITCH INLETS, GRATE INLETS, AND MANHOLES ARE SHOWN TO CENTER POINT (CP) OF INLET BOX OR MANHOLE BOX.
3. REFERENCE ROADWAY PLAN AND PROFILE SHEETS FOR ADDITIONAL INFORMATION.
4. REFERENCE CULVERT PLAN AND PROFILE SHEETS FOR ADDITIONAL INFORMATION.
5. REFERENCE DRIVEWAY DETAIL SHEETS FOR ADDITIONAL INFORMATION.
6. (GI) = GRATE INLET (DI) = DROP INLET
   (CI) = CURB INLET (MH) = MANHOLE
   (TR) = TOP OF RIM (TG) = TOP OF GRATE
   (TC) = TOP OF CURB
   (W/DB) = WITH DITCH BLOCK
7. GEOPAK DRAINAGE WAS USED FOR THE STORM SEWER DESIGN COMPUTATIONS.
8. HGL REFLECTS 10 YR DESIGN STORM.
9. REFER TO CROSS-SECTIONS FOR DITCH INFORMATION.
10. REFER TO TRAFFIC CONTROL PLANS FOR TEMPORARY DRAINAGE. PLUG EXISTING PIPE AND GROUT-FILL MH BFC5 TO LOWEST PROPOSED FLOWLINE WHEN NO LONGER NEEDED FOR TEMPORARY DRAINAGE

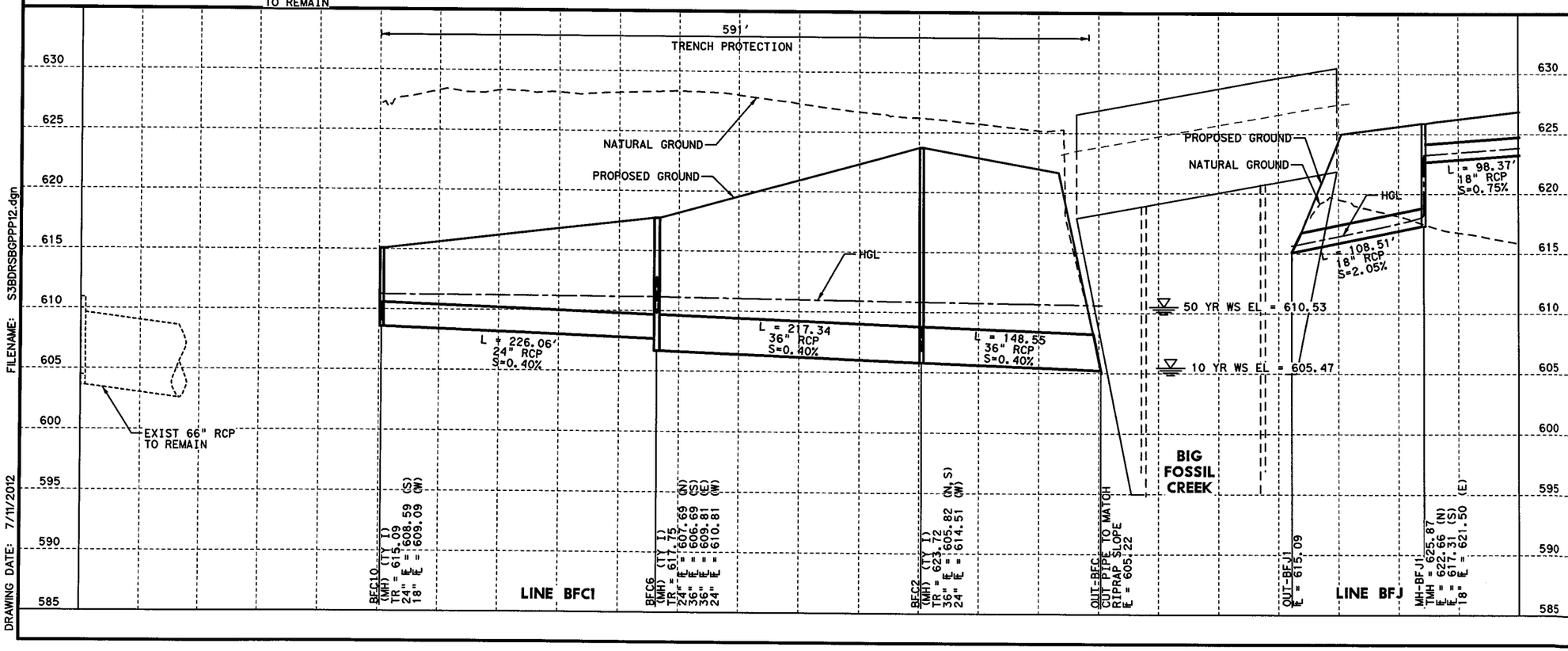

STATE OF TEXAS
B. VANDERWALT
81580
LICENSED
PROFESSIONAL ENGINEER
7/11/2012

I. S. ENGINEERS, LLC
TBPE REG. # F-11657

Texas Department of Transportation
© 2012

IH 35W FROM NORTH TARRANT PKWY TO IH 820

DRAINAGE PLAN & PROFILE
GENERAL PURPOSE LANES SB
STA 1526+00 TO STA 1538+00

SCALE: 1" = 100' H, 1" = 10' V — SHEET 7 OF 16

DESIGN	FED.RD. DIV.NO.	FEDERAL AID PROJECT NO.		HIGHWAY NO.
BV	6	(SEE TITLE SHEET)		IH 35W
GRAPHICS ZS	STATE	DISTRICT	COUNTY	SHEET NO.
CHECK SY	TEXAS	FTW	TARRANT	1239
CHECK MNM	CONTROL 0014	SECTION 16	JOB 255, ETC.	

FILENAME: S3BDRSBGPPP12.dgn
DRAWING DATE: 7/11/2012

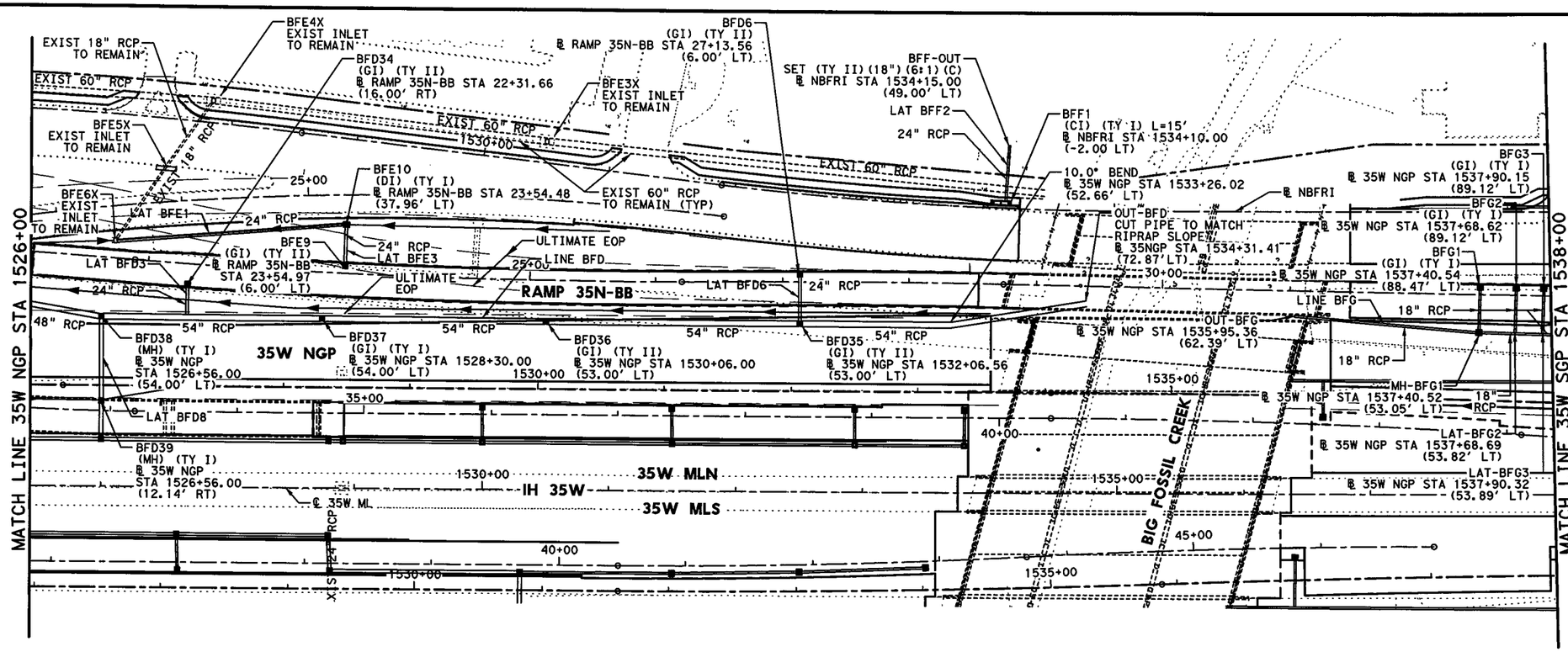

GENERAL NOTES

1. ALL LOCATIONS FOR CURB INLETS ARE SHOWN TO THE FACE OF CURB.
2. ALL LOCATIONS FOR DITCH INLETS, GRATE INLETS, AND MANHOLES ARE SHOWN TO CENTER POINT (CP) OF INLET BOX OR MANHOLE BOX.
3. REFERENCE ROADWAY PLAN AND PROFILE SHEETS FOR ADDITIONAL INFORMATION.
4. REFERENCE CULVERT PLAN AND PROFILE SHEETS FOR ADDITIONAL INFORMATION.
5. REFERENCE DRIVEWAY DETAIL SHEETS FOR ADDITIONAL INFORMATION.
6. (GI) = GRATE INLET (DI) = DROP INLET
   (CI) = CURB INLET (MH) = MANHOLE
   (TR) = TOP OF RIM (TG) = TOP OF GRATE
   (TC) = TOP OF CURB
   (W/DB) = WITH DITCH BLOCK
7. GEOPAK DRAINAGE WAS USED FOR THE STORM SEWER DESIGN COMPUTATIONS.
8. HGL REFLECTS 10 YR DESIGN STORM.
9. REFER TO CROSS-SECTIONS FOR DITCH INFORMATION.

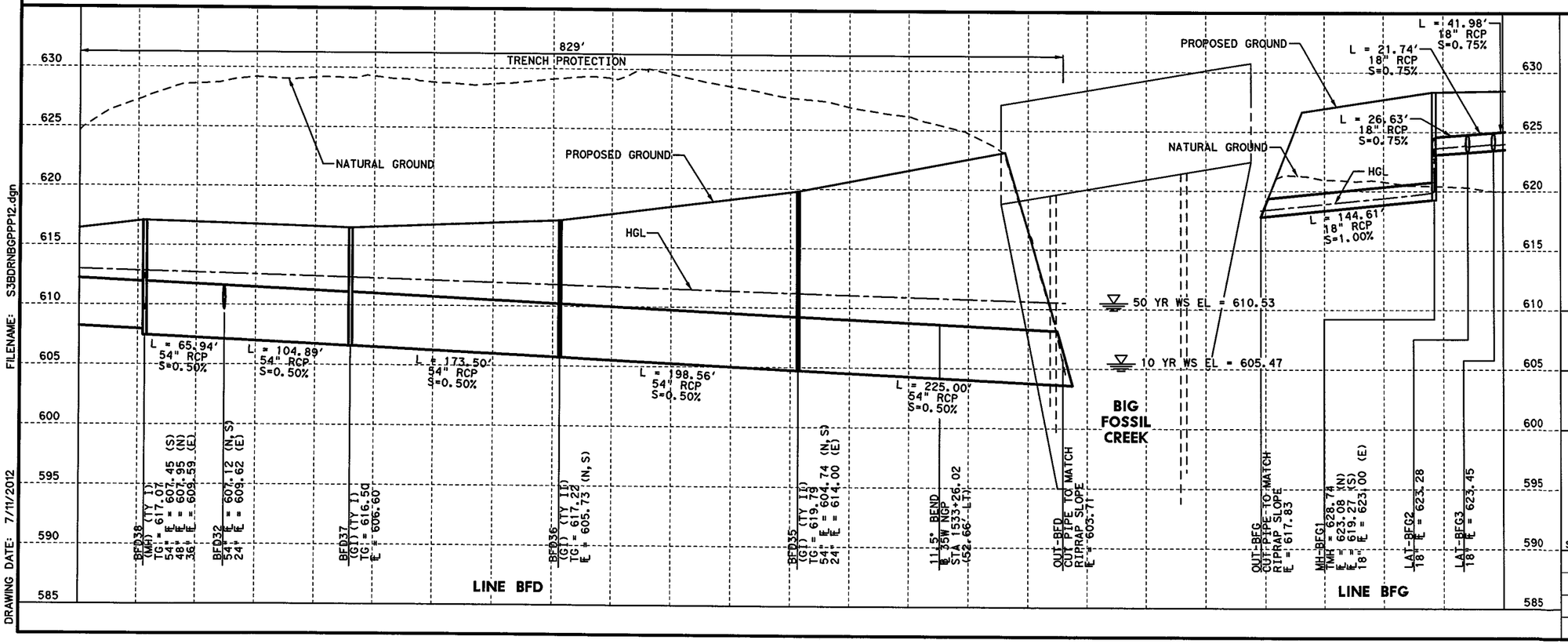

STATE OF TEXAS
B. VANDERWALT
81580
REGISTERED PROFESSIONAL ENGINEER

7/11/2012

I. S. ENGINEERS, LLC
TBPE REG. # F-11657

Texas Department of Transportation
© 2012

IH 35W FROM NORTH TARRANT PKWY TO IH 820

DRAINAGE PLAN & PROFILE
GENERAL PURPOSE LANES NB
STA 1526+00 TO STA 1538+00

SCALE: 1" = 100' H, 1" = 10' V — SHEET 8 OF 16

DESIGN	FED.RD. DIV.NO.	FEDERAL AID PROJECT NO.		HIGHWAY NO.
BV	6	(SEE TITLE SHEET)		IH 35W
GRAPHICS	STATE	DISTRICT	COUNTY	SHEET NO.
ZS	TEXAS	FTW	TARRANT	1240
CHECK	CONTROL	SECTION	JOB	
SY	0014	16	255, ETC.	
CHECK				
MNM				

FILENAME: S3BDRNBGPPP12.dgn
DRAWING DATE: 7/11/2012

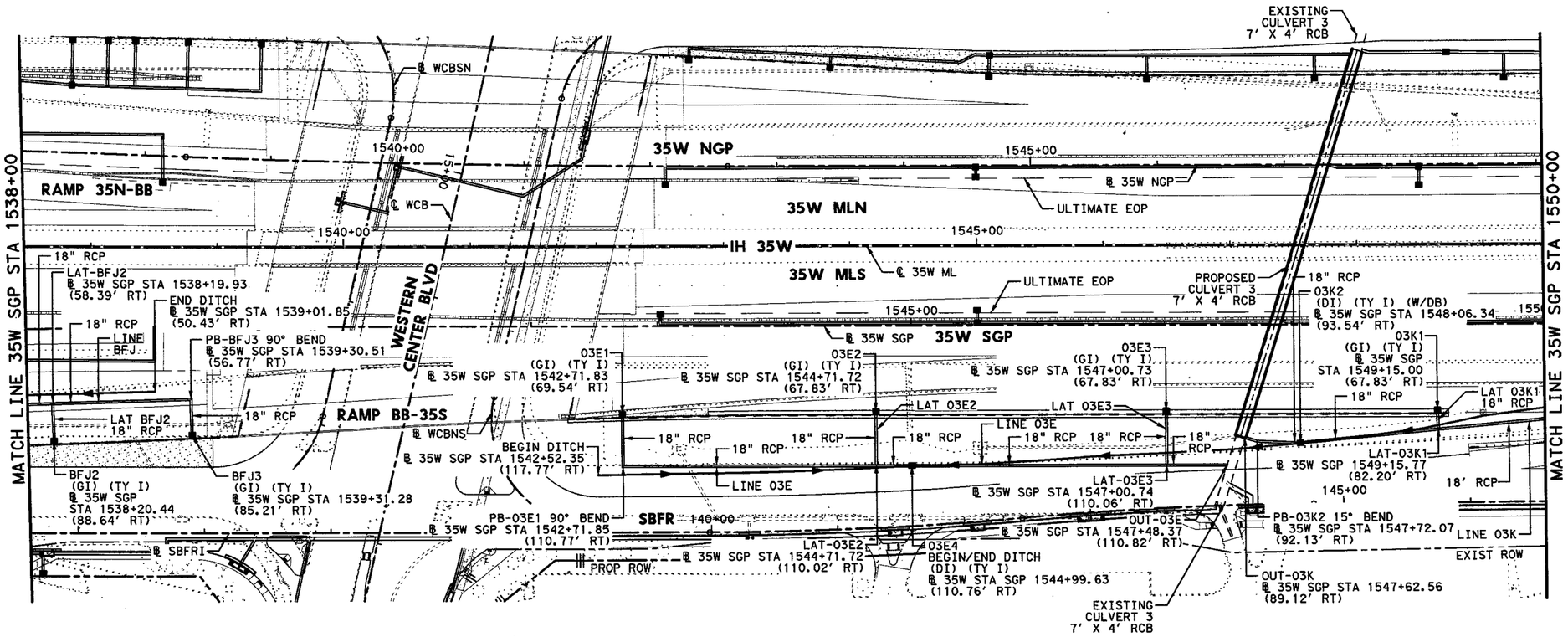

HORZ 0' 25' 50' 100'
VERT 0' 5' 10'
SCALE IN FEET

GENERAL NOTES

1. ALL LOCATIONS FOR CURB INLETS ARE SHOWN TO THE FACE OF CURB.
2. ALL LOCATIONS FOR DITCH INLETS, GRATE INLETS, AND MANHOLES ARE SHOWN TO CENTER POINT (CP) OF INLET BOX OR MANHOLE BOX.
3. REFERENCE ROADWAY PLAN AND PROFILE SHEETS FOR ADDITIONAL INFORMATION.
4. REFERENCE CULVERT PLAN AND PROFILE SHEETS FOR ADDITIONAL INFORMATION.
5. REFERENCE DRIVEWAY DETAIL SHEETS FOR ADDITIONAL INFORMATION.
6. (GI) = GRATE INLET (DI) = DROP INLET
   (CI) = CURB INLET (MH) = MANHOLE
   (TR) = TOP OF RIM (TG) = TOP OF GRATE
   (TC) = TOP OF CURB
   (W/DB) = WITH DITCH BLOCK
7. GEOPAK DRAINAGE WAS USED FOR THE STORM SEWER DESIGN COMPUTATIONS.
8. HGL REFLECTS 10 YR DESIGN STORM.
9. REFER TO CROSS-SECTIONS FOR DITCH INFORMATION.

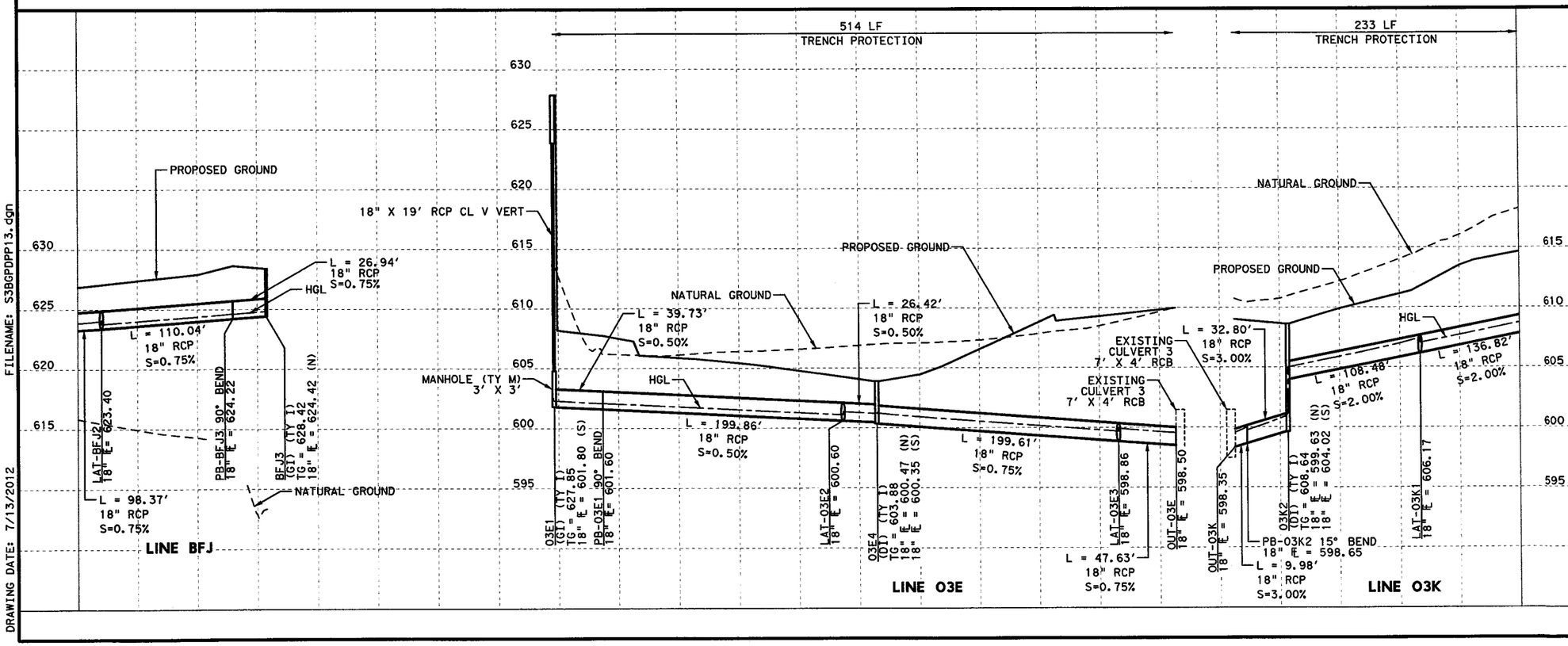

Thomas E. T. Cochill
7/6/12

CP&Y, INC.
TBPE REGISTRATION NO. F-1741

Texas Department of Transportation
© 2012

IH 35W FROM NORTH TARRANT PKWY TO IH 820

DRAINAGE PLAN & PROFILE
GENERAL PURPOSE LANES SB
STA 1538+00 TO STA 1550+00

SCALE: 1" = 100' H, 1" = 10' V — SHEET 9 OF 16

DESIGN	FED. RD. DIV. NO.	FEDERAL AID PROJECT NO.		HIGHWAY NO.
CPY	6	(SEE TITLE SHEET)		IH 35W
GRAPHICS CPY	STATE	DISTRICT	COUNTY	SHEET NO.
CHECK CPY	TEXAS	FTW	TARRANT	1241
CHECK CPY	CONTROL 0014	SECTION 16	JOB 255, ETC.	

FILENAME: S3BGPDPP13.dgn
DRAWING DATE: 7/13/2012

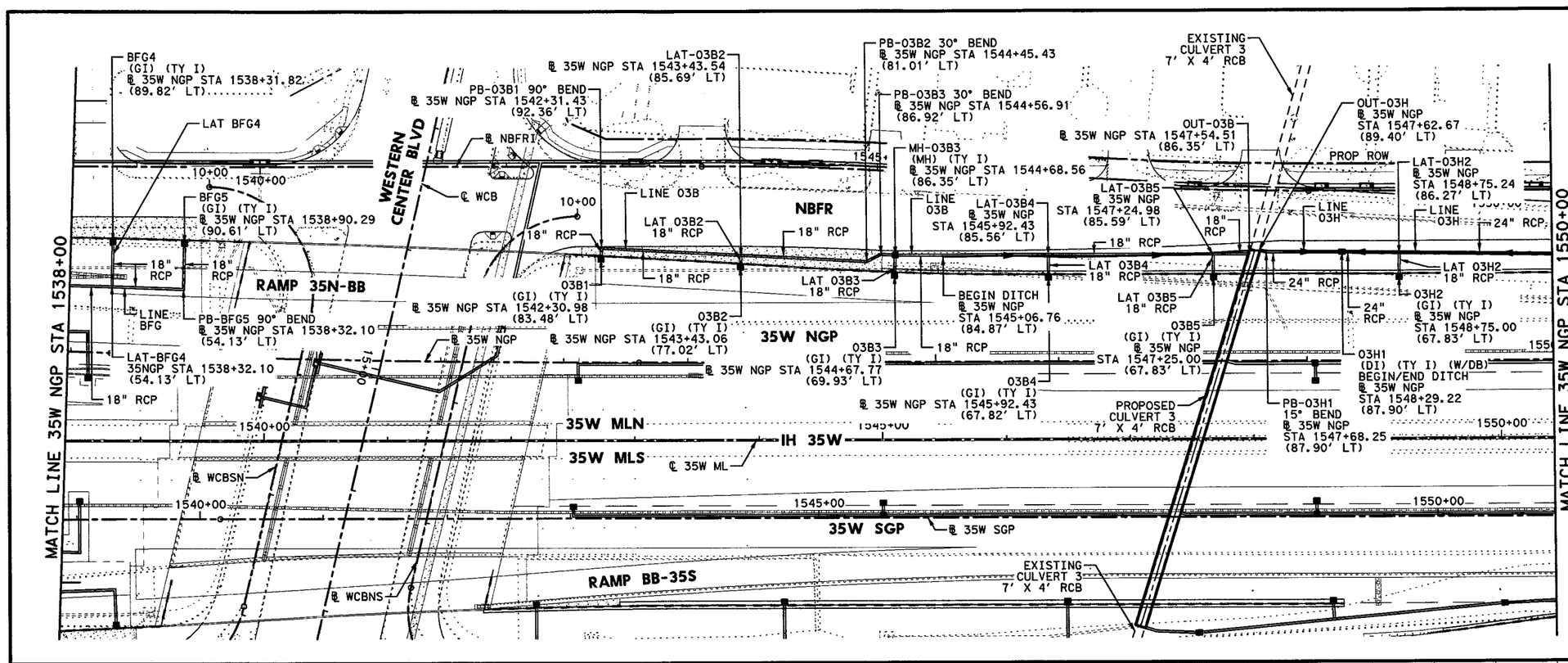

HORZ 0' 25' 50' 100'
VERT 0' 5' 10'
SCALE IN FEET

GENERAL NOTES

1. ALL LOCATIONS FOR CURB INLETS ARE SHOWN TO THE FACE OF CURB.
2. ALL LOCATIONS FOR DITCH INLETS, GRATE INLETS, AND MANHOLES ARE SHOWN TO CENTER POINT (CP) OF INLET BOX OR MANHOLE BOX.
3. REFERENCE ROADWAY PLAN AND PROFILE SHEETS FOR ADDITIONAL INFORMATION.
4. REFERENCE CULVERT PLAN AND PROFILE SHEETS FOR ADDITIONAL INFORMATION.
5. REFERENCE DRIVEWAY DETAIL SHEETS FOR ADDITIONAL INFORMATION.
6. (GI) = GRATE INLET (DI) = DROP INLET
   (CI) = CURB INLET (MH) = MANHOLE
   (TR) = TOP OF RIM (TG) = TOP OF GRATE
   (TC) = TOP OF CURB
   (W/DB) = WITH DITCH BLOCK
7. GEOPAK DRAINAGE WAS USED FOR THE STORM SEWER DESIGN COMPUTATIONS.
8. HGL REFLECTS 10 YR DESIGN STORM.
9. REFER TO CROSS-SECTIONS FOR DITCH INFORMATION.

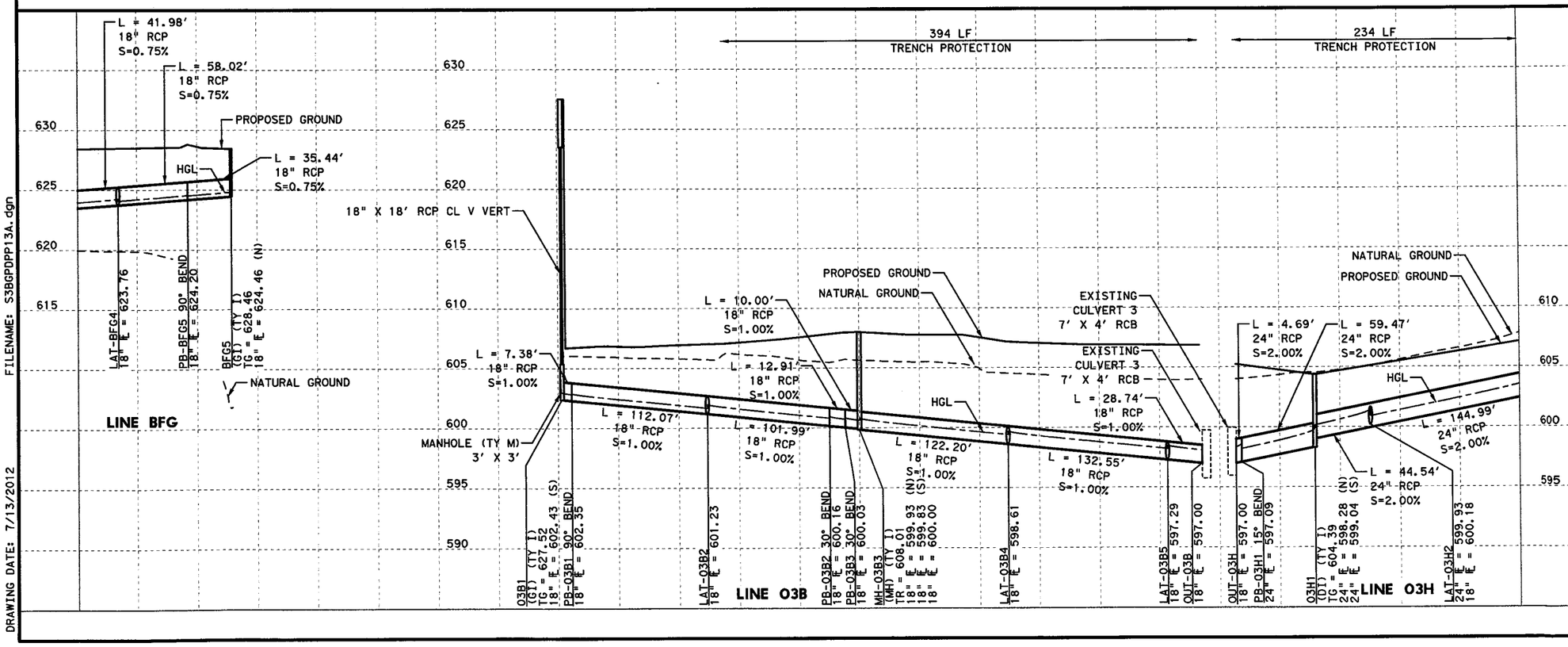

STATE OF TEXAS
THOMAS E. T. COCHILL
87665
LICENSED
PROFESSIONAL ENGINEER

Thomas E. Cochill
7/6/12

CP&Y, INC.
TBPE REGISTRATION NO. F-1741

Texas Department of Transportation
© 2012

IH 35W FROM NORTH TARRANT PKWY TO IH 820

DRAINAGE PLAN & PROFILE
GENERAL PURPOSE LANES NB
STA 1538+00 TO STA 1550+00

SCALE: 1" = 100' H, 1" = 10' V — SHEET 10 OF 16

DESIGN	FED. RD. DIV. NO.	FEDERAL AID PROJECT NO.		HIGHWAY NO.
CPY	6	(SEE TITLE SHEET)		IH 35W
GRAPHICS CPY	STATE	DISTRICT	COUNTY	SHEET NO.
CHECK CPY	TEXAS	FTW	TARRANT	1242
CHECK CPY	CONTROL	SECTION	JOB	
	0014	16	255, ETC.	

FILENAME: S3BGPDPP13A.dgn
DRAWING DATE: 7/13/2012

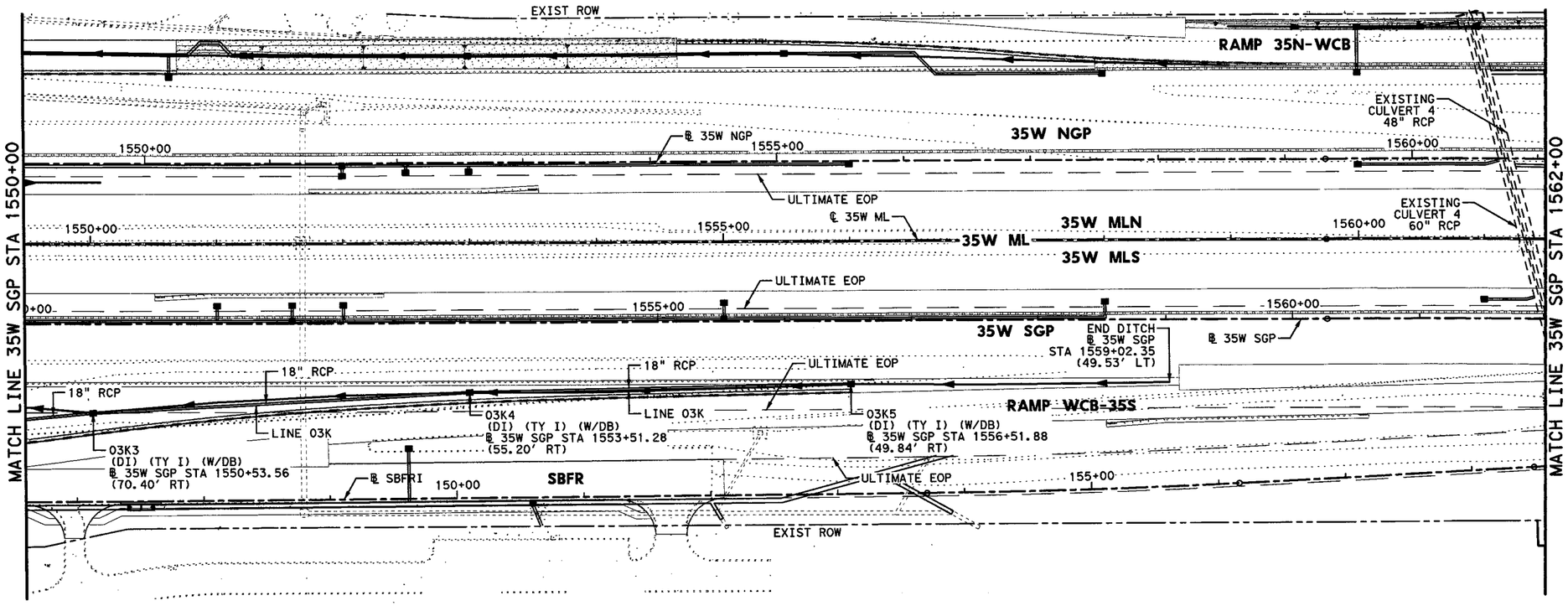

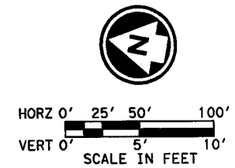

GENERAL NOTES

1. ALL LOCATIONS FOR CURB INLETS ARE SHOWN TO THE FACE OF CURB.
2. ALL LOCATIONS FOR DITCH INLETS, GRATE INLETS, AND MANHOLES ARE SHOWN TO CENTER POINT (CP) OF INLET BOX OR MANHOLE BOX.
3. REFERENCE ROADWAY PLAN AND PROFILE SHEETS FOR ADDITIONAL INFORMATION.
4. REFERENCE CULVERT PLAN AND PROFILE SHEETS FOR ADDITIONAL INFORMATION.
5. REFERENCE DRIVEWAY DETAIL SHEETS FOR ADDITIONAL INFORMATION.
6. (GI) = GRATE INLET (DI) = DROP INLET
   (CI) = CURB INLET (MH) = MANHOLE
   (TR) = TOP OF RIM (TG) = TOP OF GRATE
   (TC) = TOP OF CURB
   (W/DB) = WITH DITCH BLOCK
7. GEOPAK DRAINAGE WAS USED FOR THE STORM SEWER DESIGN COMPUTATIONS.
8. HGL REFLECTS 10 YR DESIGN STORM.
9. REFER TO CROSS-SECTIONS FOR DITCH INFORMATION.

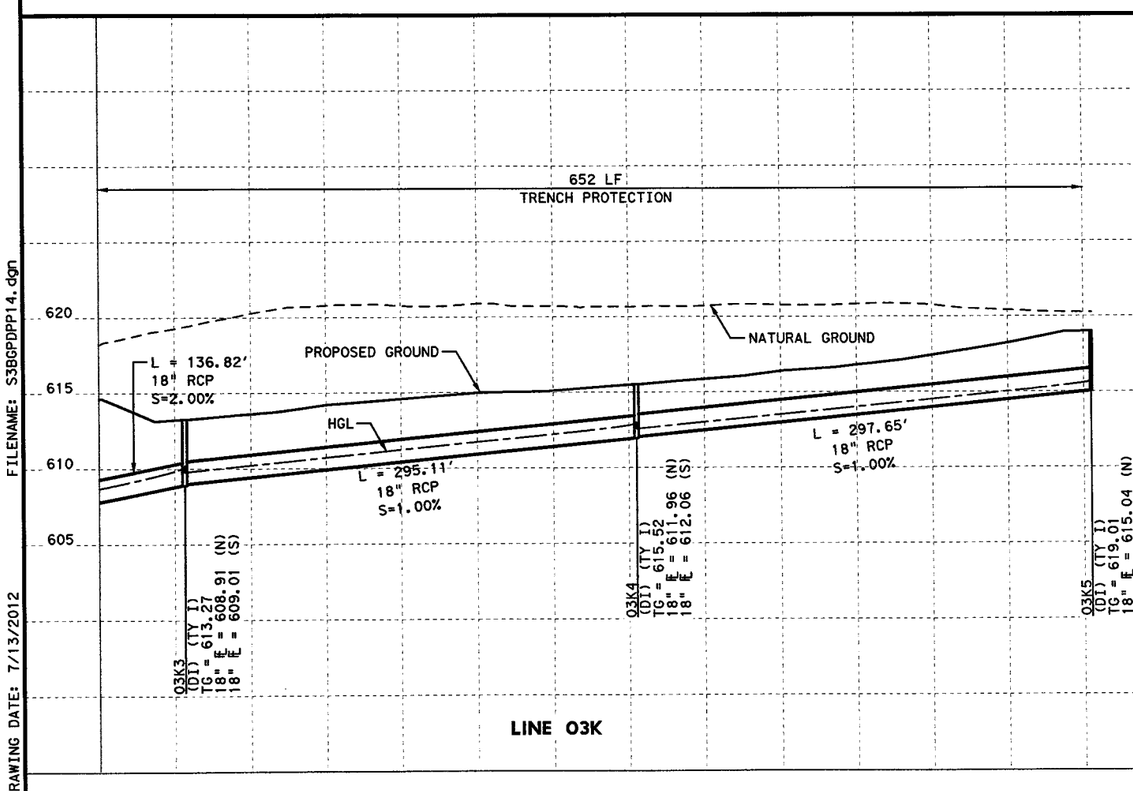

THOMAS E. T. COCHILL
87665
LICENSED
STATE OF TEXAS
PROFESSIONAL ENGINEER

Thomas E. T. Cochill
7/6/12

CP&Y, INC.
TBPE REGISTRATION NO. F-1741

Texas Department of Transportation
© 2012

IH 35W FROM NORTH TARRANT PKWY TO IH 820

DRAINAGE PLAN & PROFILE

GENERAL PURPOSE LANES SB

STA 1550+00 TO STA 1562+00

SCALE: 1" = 100' H, 1" = 10' V — SHEET 11 OF 16

DESIGN	FED. RD. DIV. NO.	FEDERAL AID PROJECT NO.		HIGHWAY NO.
CPY	6	(SEE TITLE SHEET)		IH 35W
GRAPHICS CPY	STATE	DISTRICT	COUNTY	SHEET NO.
CHECK CPY	TEXAS	FTW	TARRANT	1243
CHECK CPY	CONTROL	SECTION	JOB	
	0014	16	255, ETC.	

FILENAME: S3BGPDPP14.dgn

DRAWING DATE: 7/13/2012

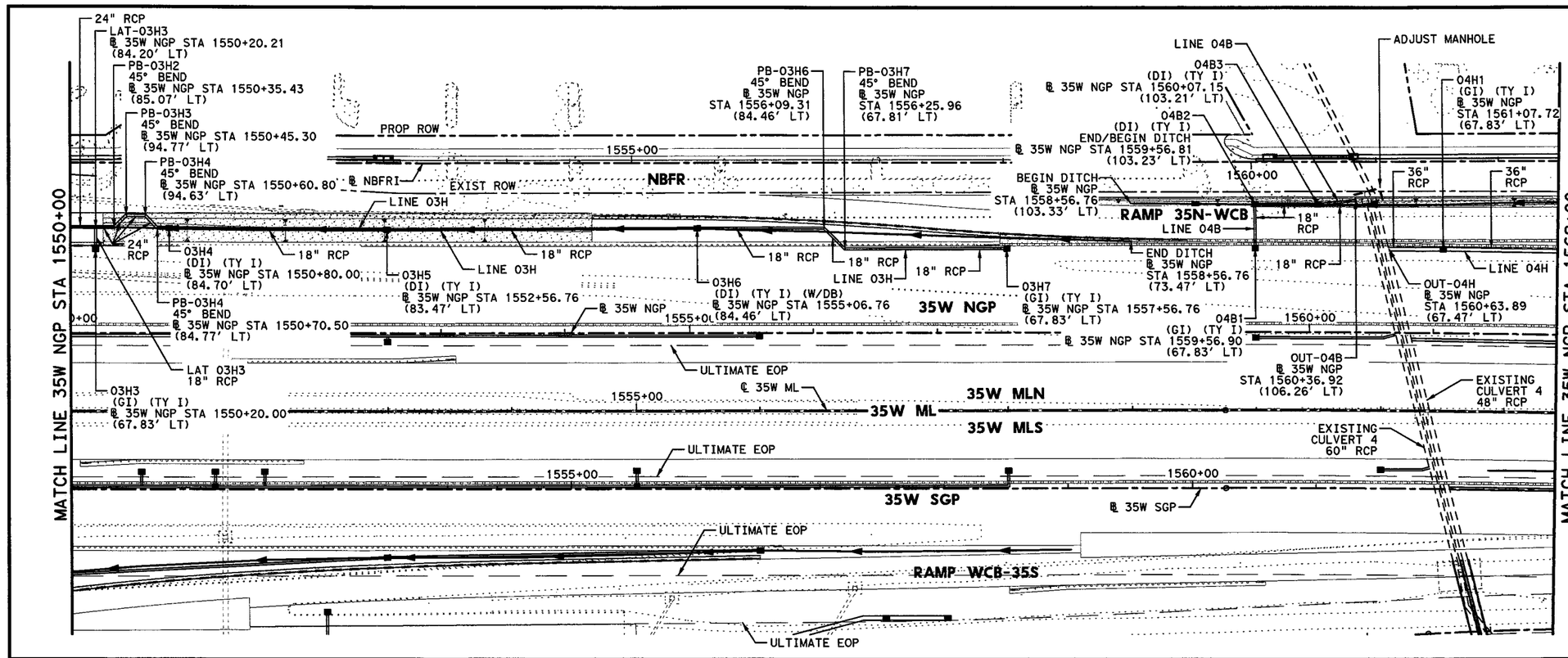

HORZ 0' 25' 50' 100'
VERT 0' 5' 10'
SCALE IN FEET

GENERAL NOTES

1. ALL LOCATIONS FOR CURB INLETS ARE SHOWN TO THE FACE OF CURB.
2. ALL LOCATIONS FOR DITCH INLETS, GRATE INLETS, AND MANHOLES ARE SHOWN TO CENTER POINT (CP) OF INLET BOX OR MANHOLE BOX.
3. REFERENCE ROADWAY PLAN AND PROFILE SHEETS FOR ADDITIONAL INFORMATION.
4. REFERENCE CULVERT PLAN AND PROFILE SHEETS FOR ADDITIONAL INFORMATION.
5. REFERENCE DRIVEWAY DETAIL SHEETS FOR ADDITIONAL INFORMATION.
6. (GI) = GRATE INLET (DI) = DROP INLET
   (CI) = CURB INLET (MH) = MANHOLE
   (TR) = TOP OF RIM (TG) = TOP OF GRATE
   (TC) = TOP OF CURB
   (W/DB) = WITH DITCH BLOCK
7. GEOPAK DRAINAGE WAS USED FOR THE STORM SEWER DESIGN COMPUTATIONS.
8. HGL REFLECTS 10 YR DESIGN STORM.
9. REFER TO CROSS-SECTIONS FOR DITCH INFORMATION.

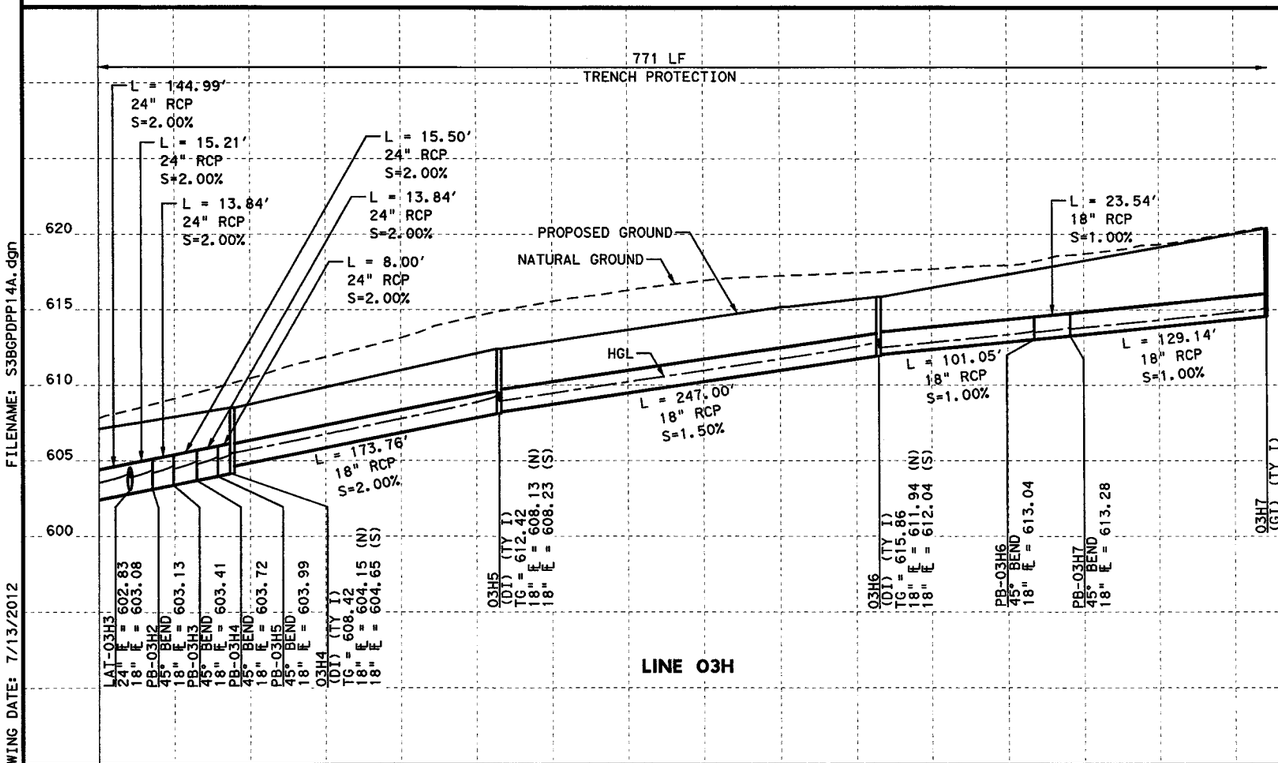

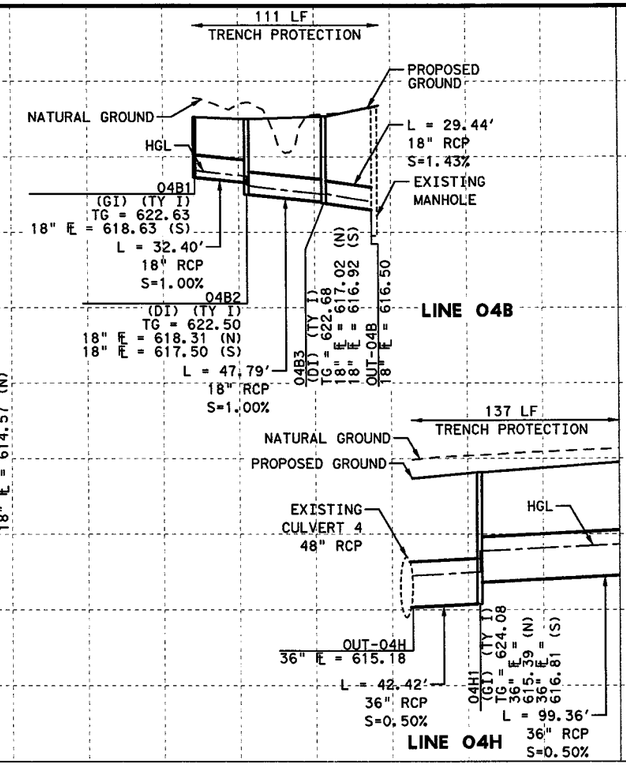

STATE OF TEXAS
THOMAS E. T. COCHILL
87665
LICENSED
PROFESSIONAL ENGINEER

Thomas E. Cochill
7/9/12

CP&Y, INC.
TBPE REGISTRATION NO. F-1741

Texas Department of Transportation
© 2012

IH 35W FROM NORTH TARRANT PKWY TO IH 820

DRAINAGE PLAN & PROFILE

GENERAL PURPOSE LANES NB

STA 1550+00 TO STA 1562+00

SCALE: 1" = 100' H, 1" = 10' V — SHEET 12 OF 16

DESIGN	FED. RD. DIV. NO.	FEDERAL AID PROJECT NO.		HIGHWAY NO.
CPY	6	(SEE TITLE SHEET)		IH 35W
GRAPHICS CPY	STATE	DISTRICT	COUNTY	SHEET NO.
CHECK CPY	TEXAS	FTW	TARRANT	1244
CHECK CPY	CONTROL	SECTION	JOB	
	0014	16	255, ETC.	

FILENAME: S3BGPDPP14A.dgn
DRAWING DATE: 7/13/2012

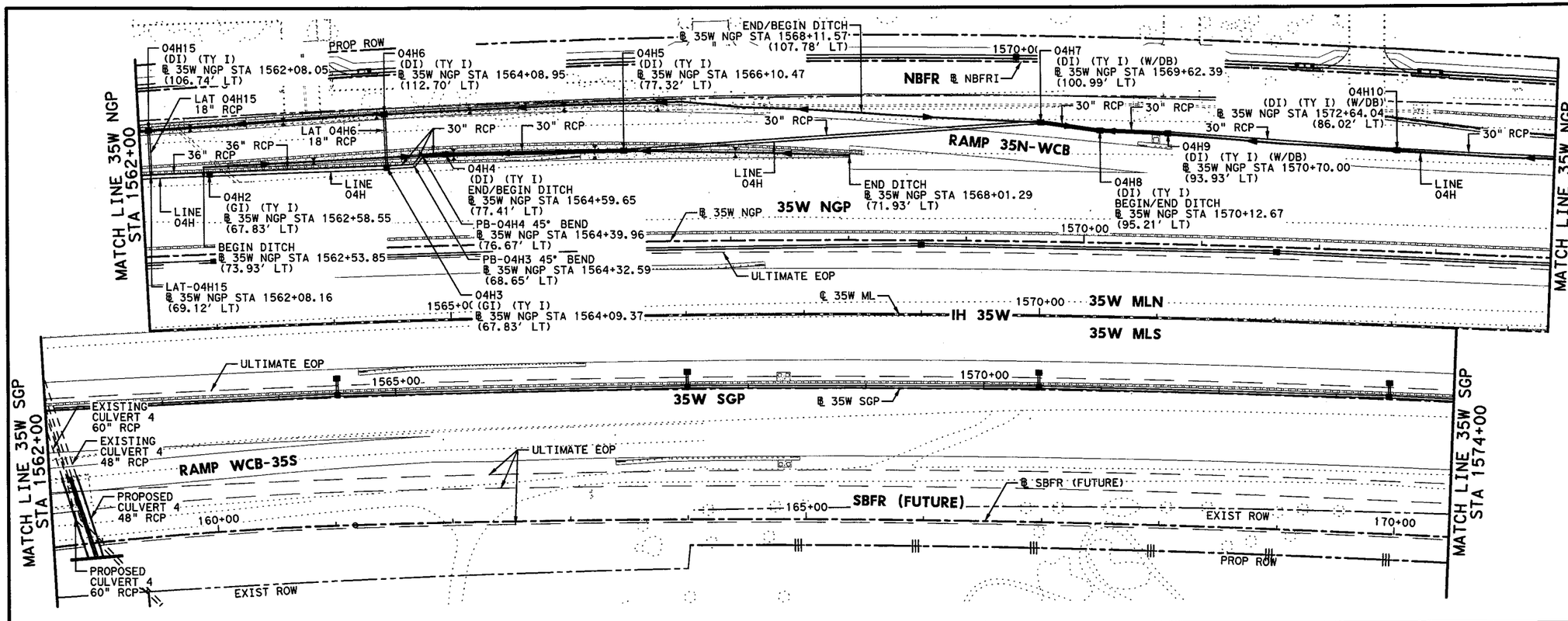

HORZ 0' 25' 50' 100'
VERT 0' 5' 10'
SCALE IN FEET

GENERAL NOTES

1. ALL LOCATIONS FOR CURB INLETS ARE SHOWN TO THE FACE OF CURB.
2. ALL LOCATIONS FOR DITCH INLETS, GRATE INLETS, AND MANHOLES ARE SHOWN TO CENTER POINT (CP) OF INLET BOX OR MANHOLE BOX.
3. REFERENCE ROADWAY PLAN AND PROFILE SHEETS FOR ADDITIONAL INFORMATION.
4. REFERENCE CULVERT PLAN AND PROFILE SHEETS FOR ADDITIONAL INFORMATION.
5. REFERENCE DRIVEWAY DETAIL SHEETS FOR ADDITIONAL INFORMATION.
6. (GI) = GRATE INLET
   (DI) = DROP INLET
   (CI) = CURB INLET
   (MH) = MANHOLE
   (TR) = TOP OF RIM
   (TG) = TOP OF GRATE
   (TC) = TOP OF CURB
   (W/DB) = WITH DITCH BLOCK
7. GEOPAK DRAINAGE WAS USED FOR THE STORM SEWER DESIGN COMPUTATIONS.
8. HGL REFLECTS 10 YR DESIGN STORM.
9. REFER TO CROSS-SECTIONS FOR DITCH INFORMATION.

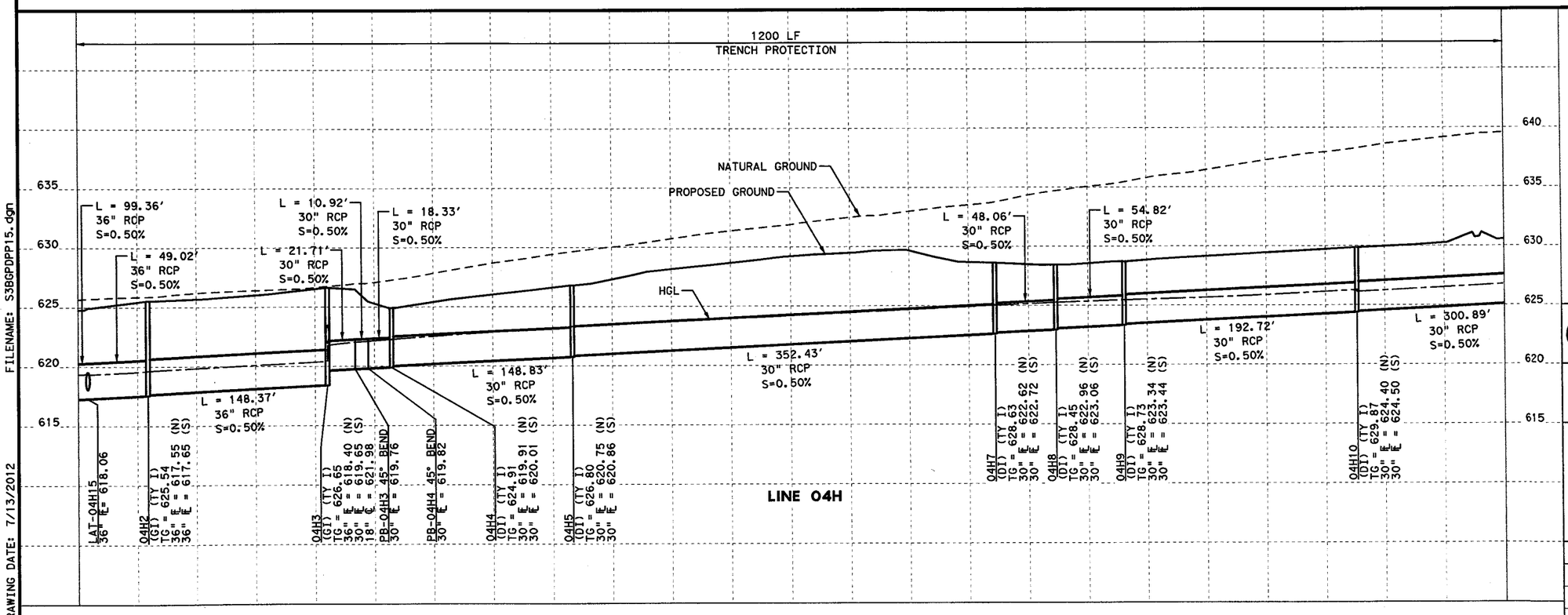

STATE OF TEXAS
THOMAS E. T. COCHILL
87665
LICENSED
PROFESSIONAL ENGINEER

Thomas E. T. Cochill
7/6/12

CP&Y, INC.
TBPE REGISTRATION NO. F-1741

Texas Department of Transportation
© 2012

IH 35W FROM NORTH TARRANT PKWY TO IH 820

DRAINAGE PLAN & PROFILE

GENERAL PURPOSE LANES NB

STA 1562+00 TO STA 1574+00

SCALE: 1" = 100' H, 1" = 10' V — SHEET 13 OF 16

DESIGN	FED. RD. DIV. NO.	FEDERAL AID PROJECT NO.		HIGHWAY NO.
CPY	6	(SEE TITLE SHEET)		IH 35W
GRAPHICS CPY	STATE	DISTRICT	COUNTY	SHEET NO.
CHECK CPY	TEXAS	FTW	TARRANT	1245
CHECK CPY	CONTROL 0014	SECTION 16	JOB 255, ETC.	

FILENAME: S38GPDPP15.dgn
DRAWING DATE: 7/13/2012

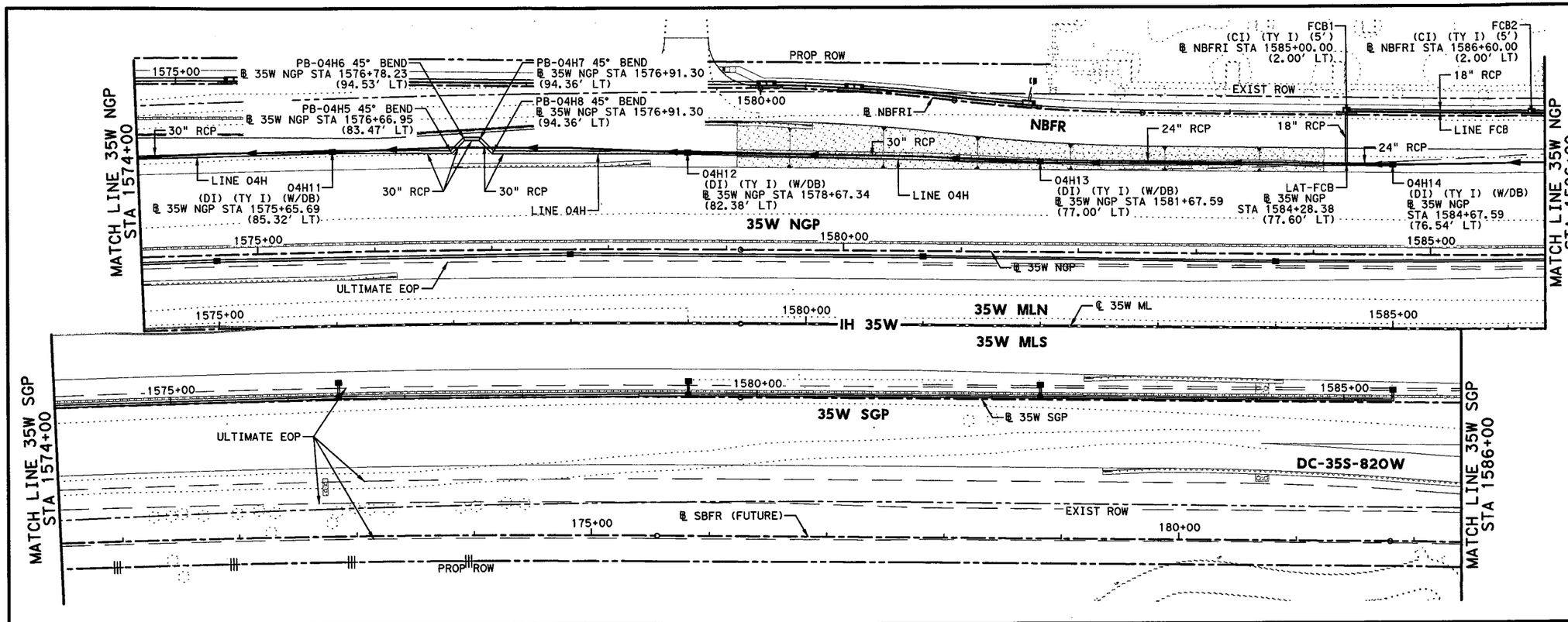

HORZ 0' 25' 50' 100'
VERT 0' 5' 10'
SCALE IN FEET

GENERAL NOTES

1. ALL LOCATIONS FOR CURB INLETS ARE SHOWN TO THE FACE OF CURB.
2. ALL LOCATIONS FOR DITCH INLETS, GRATE INLETS, AND MANHOLES ARE SHOWN TO CENTER POINT (CP) OF INLET BOX OR MANHOLE BOX.
3. REFERENCE ROADWAY PLAN AND PROFILE SHEETS FOR ADDITIONAL INFORMATION.
4. REFERENCE CULVERT PLAN AND PROFILE SHEETS FOR ADDITIONAL INFORMATION.
5. REFERENCE DRIVEWAY DETAIL SHEETS FOR ADDITIONAL INFORMATION.
6. (GI) = GRATE INLET
   (DI) = DROP INLET
   (CI) = CURB INLET
   (MH) = MANHOLE
   (TR) = TOP OF RIM
   (TG) = TOP OF GRATE
   (TC) = TOP OF CURB
   (W/DB) = WITH DITCH BLOCK
7. GEOPAK DRAINAGE WAS USED FOR THE STORM SEWER DESIGN COMPUTATIONS.
8. HGL REFLECTS 10 YR DESIGN STORM.
9. REFER TO CROSS-SECTIONS FOR DITCH INFORMATION.

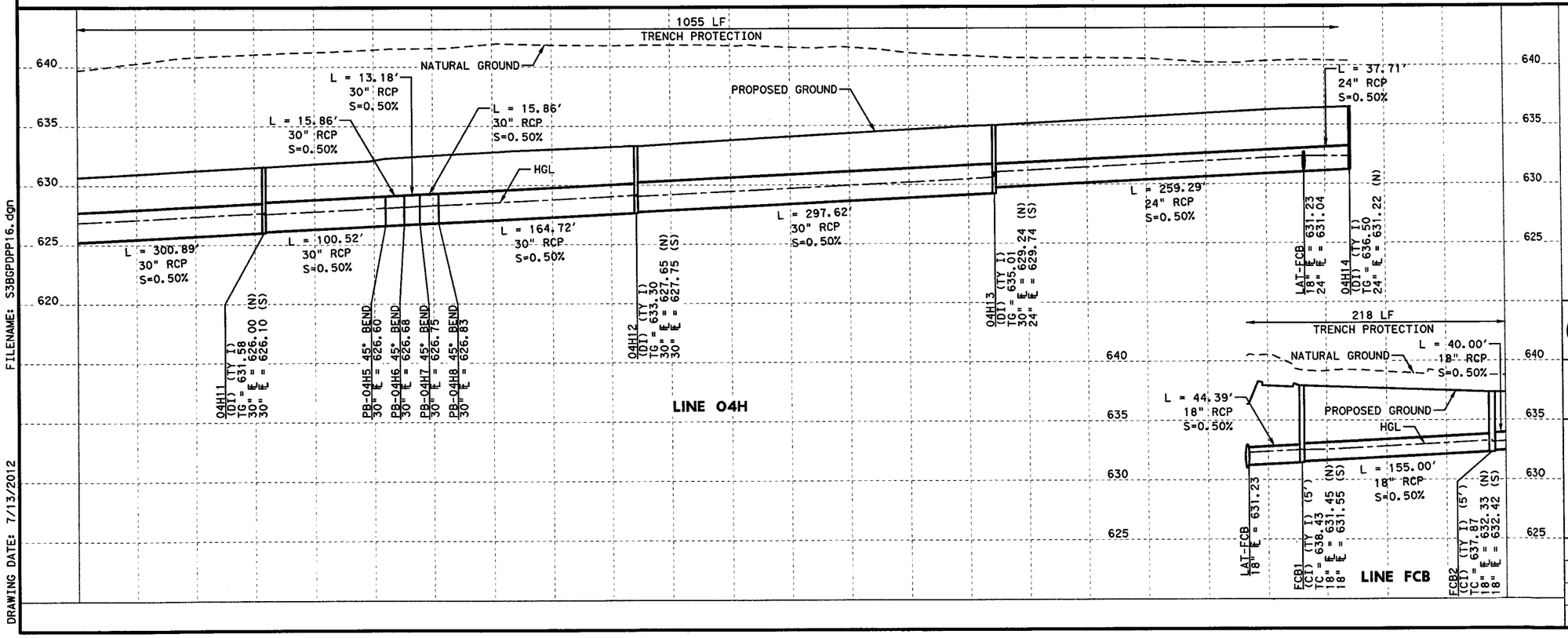

STATE OF TEXAS
THOMAS E. T. COCHILL
87665
LICENSED
PROFESSIONAL ENGINEER

Thomas E. Cochill
7/6/12

CP&Y, INC.
TBPE REGISTRATION NO. F-1741

Texas Department of Transportation
© 2012

IH 35W FROM NORTH TARRANT PKWY TO IH 820

DRAINAGE PLAN & PROFILE

GENERAL PURPOSE LANES NB

STA 1574+00 TO STA 1586+00

SCALE: 1" = 100' H, 1" = 10' V — SHEET 14 OF 16

DESIGN	FED. RD. DIV. NO.	FEDERAL AID PROJECT NO.		HIGHWAY NO.
CPY	6	(SEE TITLE SHEET)		IH 35W
GRAPHICS	STATE	DISTRICT	COUNTY	SHEET NO.
CPY	TEXAS	FTW	TARRANT	1246
CHECK	CONTROL	SECTION	JOB	
CPY	0014	16	255, ETC.	

FILENAME: S38GPDPP16.dgn

DRAWING DATE: 7/13/2012

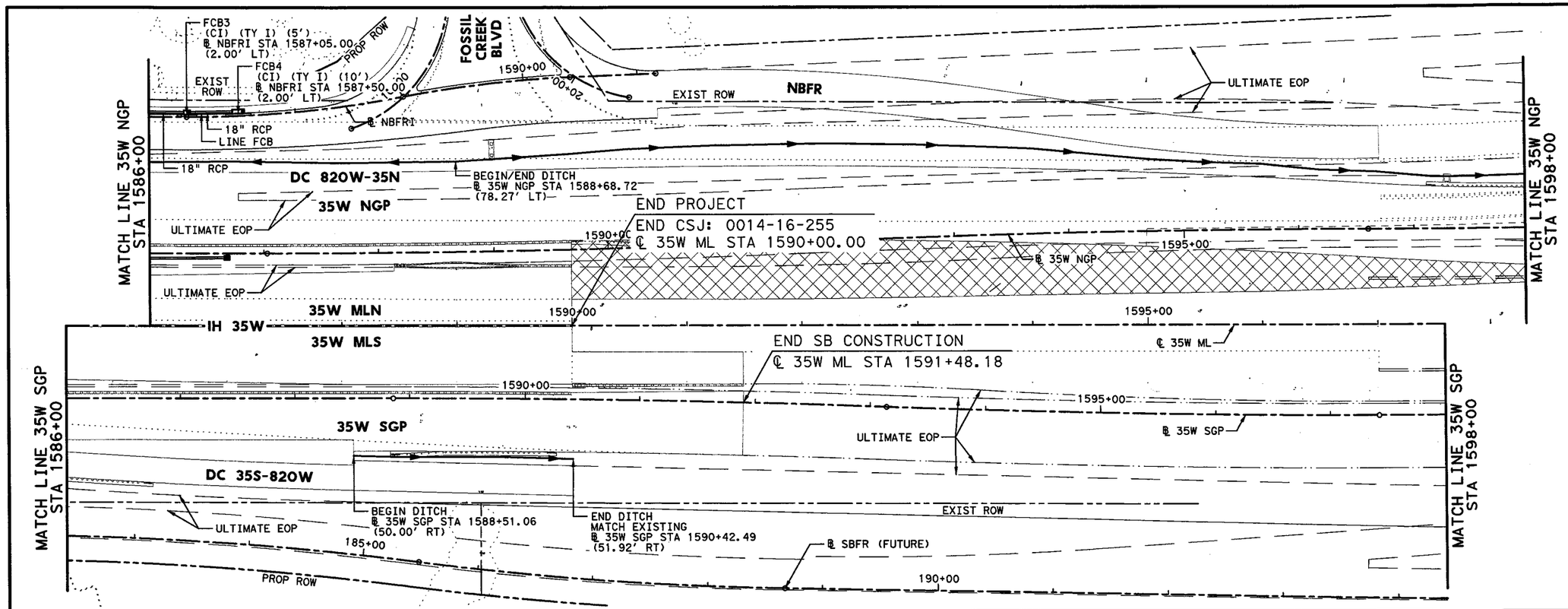

HORZ 0' 25' 50' 100'
VERT 0' 5' 10'
SCALE IN FEET

GENERAL NOTES

1. ALL LOCATIONS FOR CURB INLETS ARE SHOWN TO THE FACE OF CURB.
2. ALL LOCATIONS FOR DITCH INLETS, GRATE INLETS, AND MANHOLES ARE SHOWN TO CENTER POINT (CP) OF INLET BOX OR MANHOLE BOX.
3. REFERENCE ROADWAY PLAN AND PROFILE SHEETS FOR ADDITIONAL INFORMATION.
4. REFERENCE CULVERT PLAN AND PROFILE SHEETS FOR ADDITIONAL INFORMATION.
5. REFERENCE DRIVEWAY DETAIL SHEETS FOR ADDITIONAL INFORMATION.
6. (GI) = GRATE INLET
   (DI) = DROP INLET
   (CI) = CURB INLET
   (MH) = MANHOLE
   (TR) = TOP OF RIM
   (TG) = TOP OF GRATE
   (TC) = TOP OF CURB
   (W/DB) = WITH DITCH BLOCK
7. GEOPAK DRAINAGE WAS USED FOR THE STORM SEWER DESIGN COMPUTATIONS.
8. HGL REFLECTS 10 YR DESIGN STORM.
9. REFER TO CROSS-SECTIONS FOR DITCH INFORMATION.

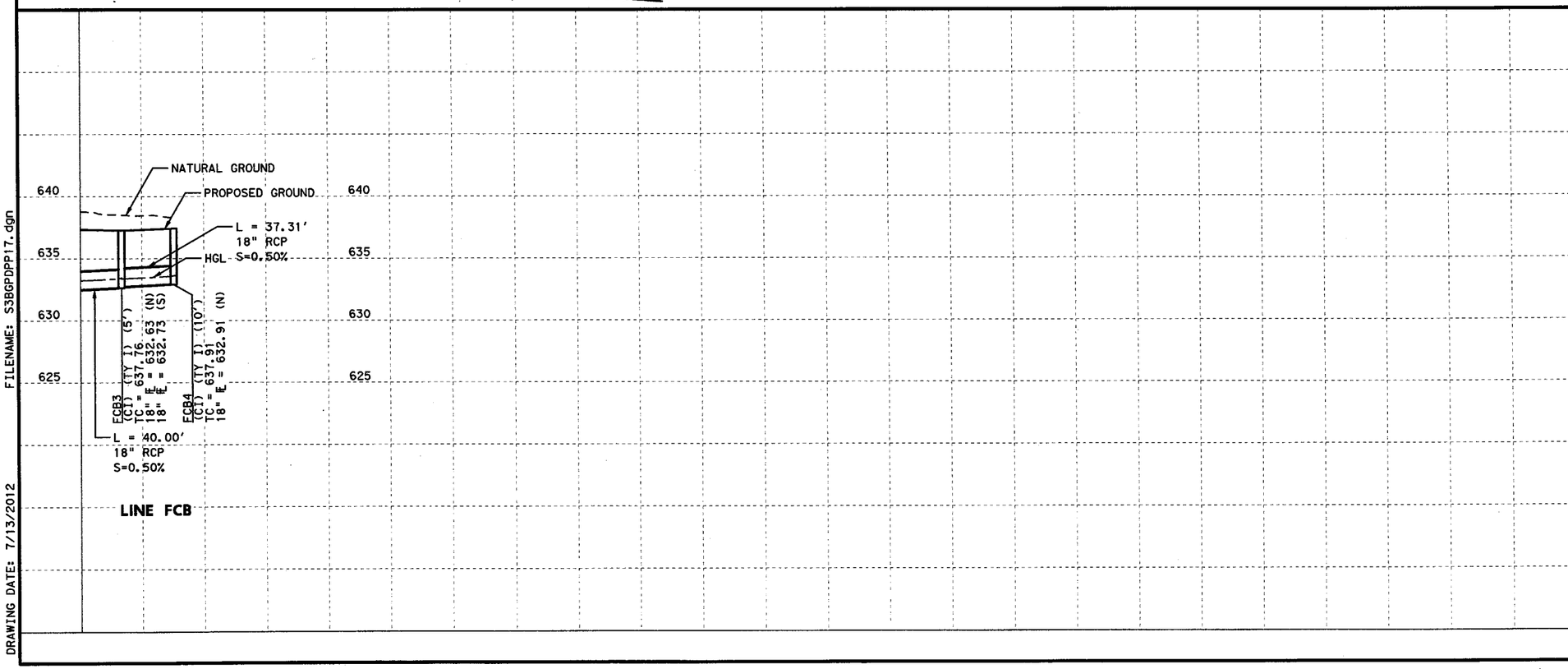

LINE FCB

STATE OF TEXAS
THOMAS E. T. COCHILL
87665
LICENSED
PROFESSIONAL ENGINEER

Thomas E. T. Cochill
7/9/12

CP&Y, INC.
TBPE REGISTRATION NO. F-1741

Texas Department of Transportation
© 2012

IH 35W FROM NORTH TARRANT PKWY TO IH 820

DRAINAGE PLAN & PROFILE

GENERAL PURPOSE LANES NB

STA 1586+00 TO STA 1598+00

SCALE: 1" = 100' H, 1" = 10' V — SHEET 15 OF 16

DESIGN	FED. RD. DIV. NO.	FEDERAL AID PROJECT NO.		HIGHWAY NO.
CPY	6	(SEE TITLE SHEET)		IH 35W
GRAPHICS CPY	STATE	DISTRICT	COUNTY	SHEET NO.
CHECK CPY	TEXAS	FTW	TARRANT	1247
CHECK CPY	CONTROL 0014	SECTION 16	JOB 255, ETC.	

FILENAME: S3BGPDPP17.dgn

DRAWING DATE: 7/13/2012

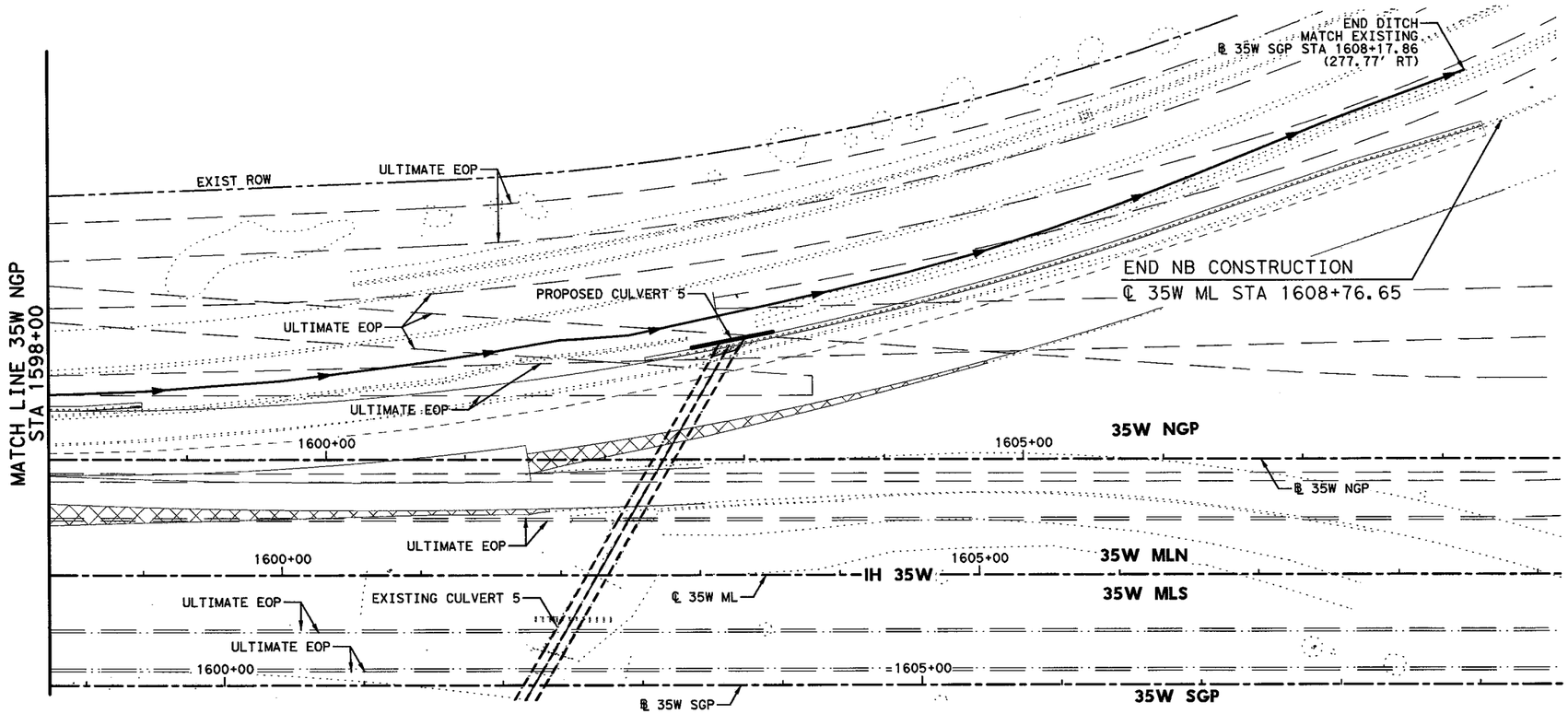

HORZ 0' 25' 50' 100'
VERT 0' 5' 10'
SCALE IN FEET

GENERAL NOTES

1. ALL LOCATIONS FOR CURB INLETS ARE SHOWN TO THE FACE OF CURB.
2. ALL LOCATIONS FOR DITCH INLETS, GRATE INLETS, AND MANHOLES ARE SHOWN TO CENTER POINT (CP) OF INLET BOX OR MANHOLE BOX.
3. REFERENCE ROADWAY PLAN AND PROFILE SHEETS FOR ADDITIONAL INFORMATION.
4. REFERENCE CULVERT PLAN AND PROFILE SHEETS FOR ADDITIONAL INFORMATION.
5. REFERENCE DRIVEWAY DETAIL SHEETS FOR ADDITIONAL INFORMATION.
6. (GI) = GRATE INLET (DI) = DROP INLET
   (CI) = CURB INLET (MH) = MANHOLE
   (TR) = TOP OF RIM (TG) = TOP OF GRATE
   (TC) = TOP OF CURB
   (W/DB) = WITH DITCH BLOCK
7. GEOPAK DRAINAGE WAS USED FOR THE STORM SEWER DESIGN COMPUTATIONS.
8. HGL REFLECTS 10 YR DESIGN STORM.
9. REFER TO CROSS-SECTIONS FOR DITCH INFORMATION.

STATE OF TEXAS
THOMAS E. T. COCHILL
87665
LICENSED
PROFESSIONAL ENGINEER

Thomas E. T. Cochill
7/9/12

CP&Y, INC.
TBPE REGISTRATION NO. F-1741

Texas Department of Transportation
© 2012

IH 35W FROM NORTH TARRANT PKWY TO IH 820

DRAINAGE PLAN & PROFILE

GENERAL PURPOSE LANES NB
STA 1598+00 TO END PROJECT

SCALE: 1" = 100' H, 1" = 10' V — SHEET 16 OF 16

DESIGN	FED. RD. DIV. NO.	FEDERAL AID PROJECT NO.		HIGHWAY NO.
CPY	6	(SEE TITLE SHEET)		IH 35W
GRAPHICS CPY	STATE	DISTRICT	COUNTY	SHEET NO.
CHECK CPY	TEXAS	FTW	TARRANT	1248
CHECK CPY	CONTROL	SECTION	JOB	
	0014	16	255, ETC.	

FILENAME: S3BGPDPP18.dgn
DRAWING DATE: 7/13/2012

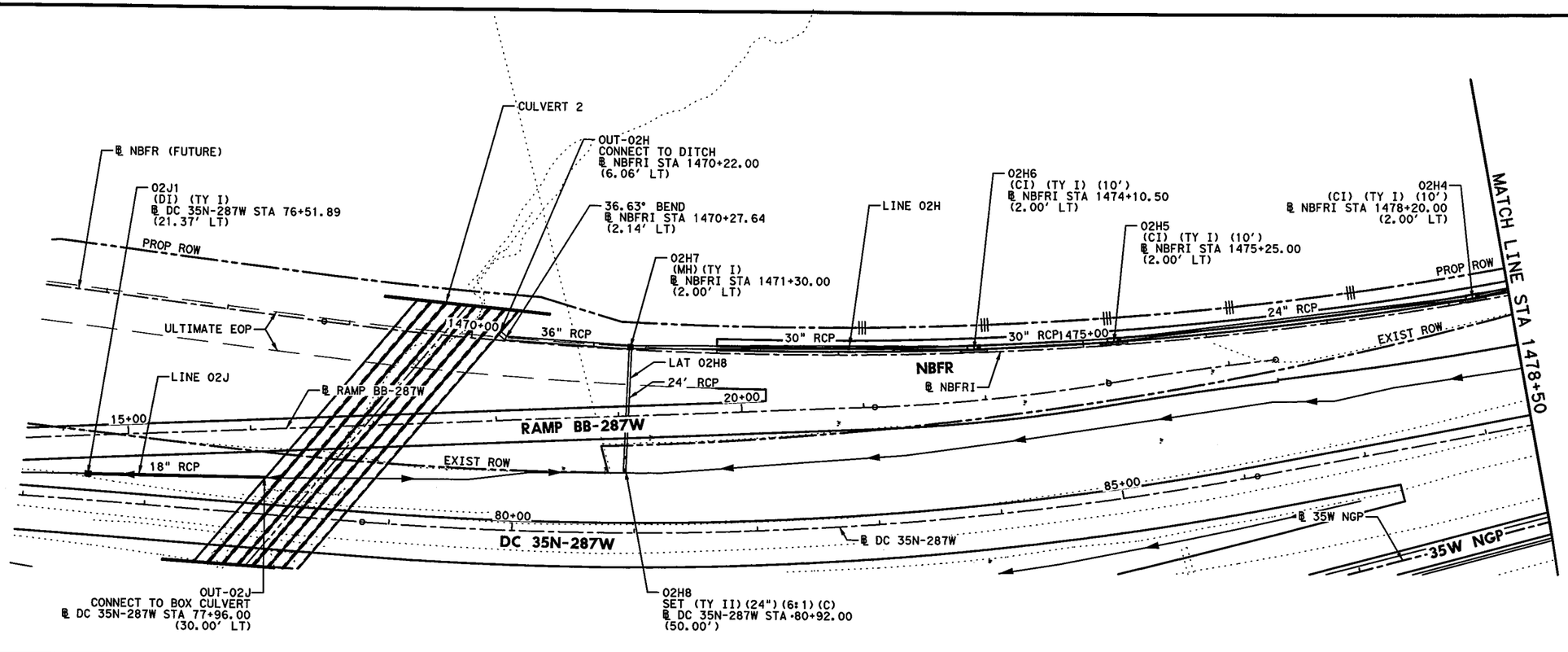

HORZ 0' 25' 50' 100'

SCALE IN FEET

GENERAL NOTES

1. ALL LOCATIONS FOR CURB INLETS ARE SHOWN TO THE FACE OF CURB.
2. ALL LOCATIONS FOR DITCH INLETS, GRATE INLETS, AND MANHOLES ARE SHOWN TO CENTER POINT (CP) OF INLET BOX OR MANHOLE BOX.
3. REFERENCE ROADWAY PLAN AND PROFILE SHEETS FOR ADDITIONAL INFORMATION.
4. REFERENCE CULVERT PLAN AND PROFILE SHEETS FOR ADDITIONAL INFORMATION.
5. REFERENCE DRIVEWAY DETAIL SHEETS FOR ADDITIONAL INFORMATION.
6. (GI) = GRATE INLET (DI) = DROP INLET
   (CI) = CURB INLET (MH) = MANHOLE
   (TR) = TOP OF RIM (TG) = TOP OF GRATE
   (TC) = TOP OF CURB
   (W/DB) = WITH DITCH BLOCK
7. GEOPAK DRAINAGE WAS USED FOR THE STORM SEWER DESIGN COMPUTATIONS.
8. HGL REFLECTS 10 YR DESIGN STORM.
9. REFER TO CROSS-SECTIONS FOR DITCH INFORMATION.

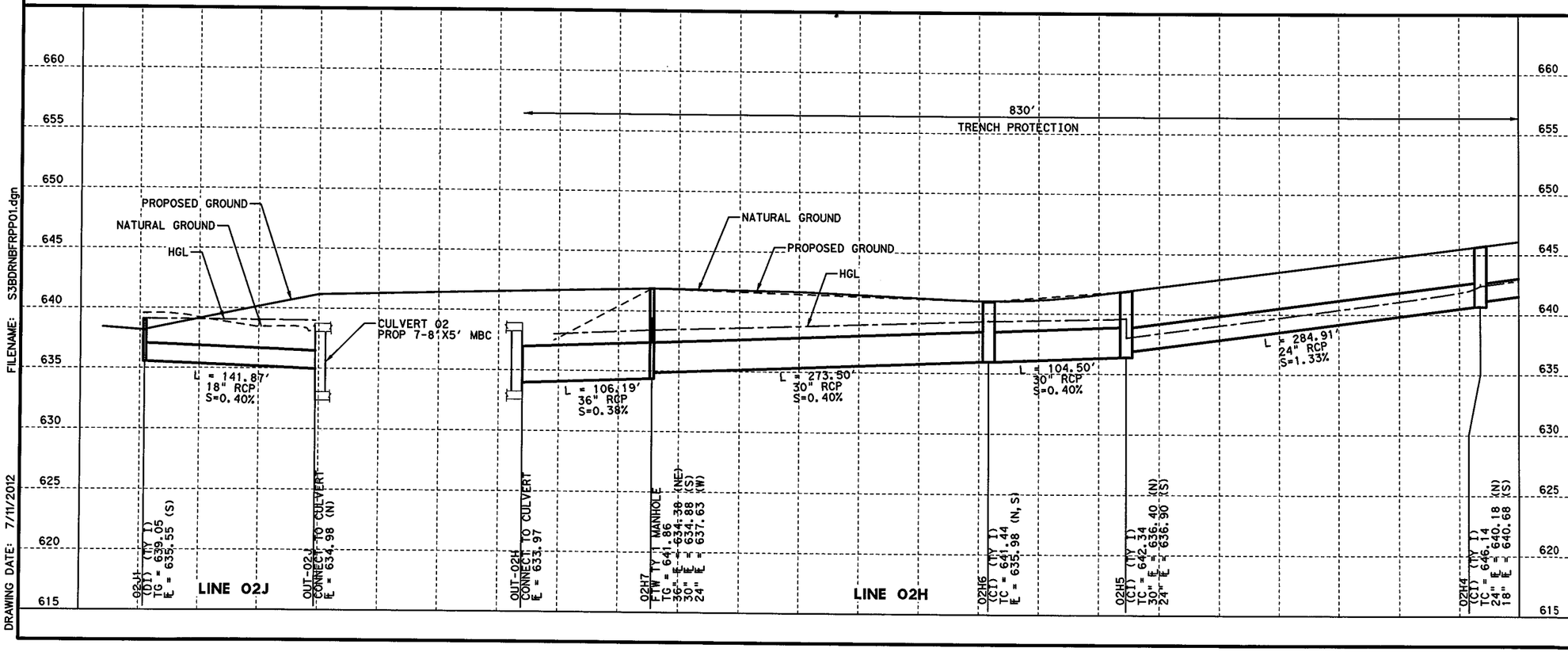

STATE OF TEXAS
SHAFEE YUSUF
94963
LICENSED
PROFESSIONAL ENGINEER
7/11/12

I. S. ENGINEERS, LLC
TBPE REG. # F-11657

Texas Department of Transportation
© 2012

IH 35W FROM NORTH TARRANT PKWY TO IH 820

DRAINAGE PLAN & PROFILE

NBFR

STA 1466+50 TO STA 1478+50

SCALE: 1" = 100' H, 1" = 10' V — SHEET 1 OF 8

DESIGN	FED.RD. DIV.NO.	FEDERAL AID PROJECT NO.		HIGHWAY NO.
BV	6	(SEE TITLE SHEET)		IH 35W
GRAPHICS ZS	STATE	DISTRICT	COUNTY	SHEET NO.
CHECK SY	TEXAS	FTW	TARRANT	1249
CHECK MNM	CONTROL 0014	SECTION 16	JOB 255, ETC.	

FILENAME: S3BDRNBFRPP01.dgn

DRAWING DATE: 7/11/2012

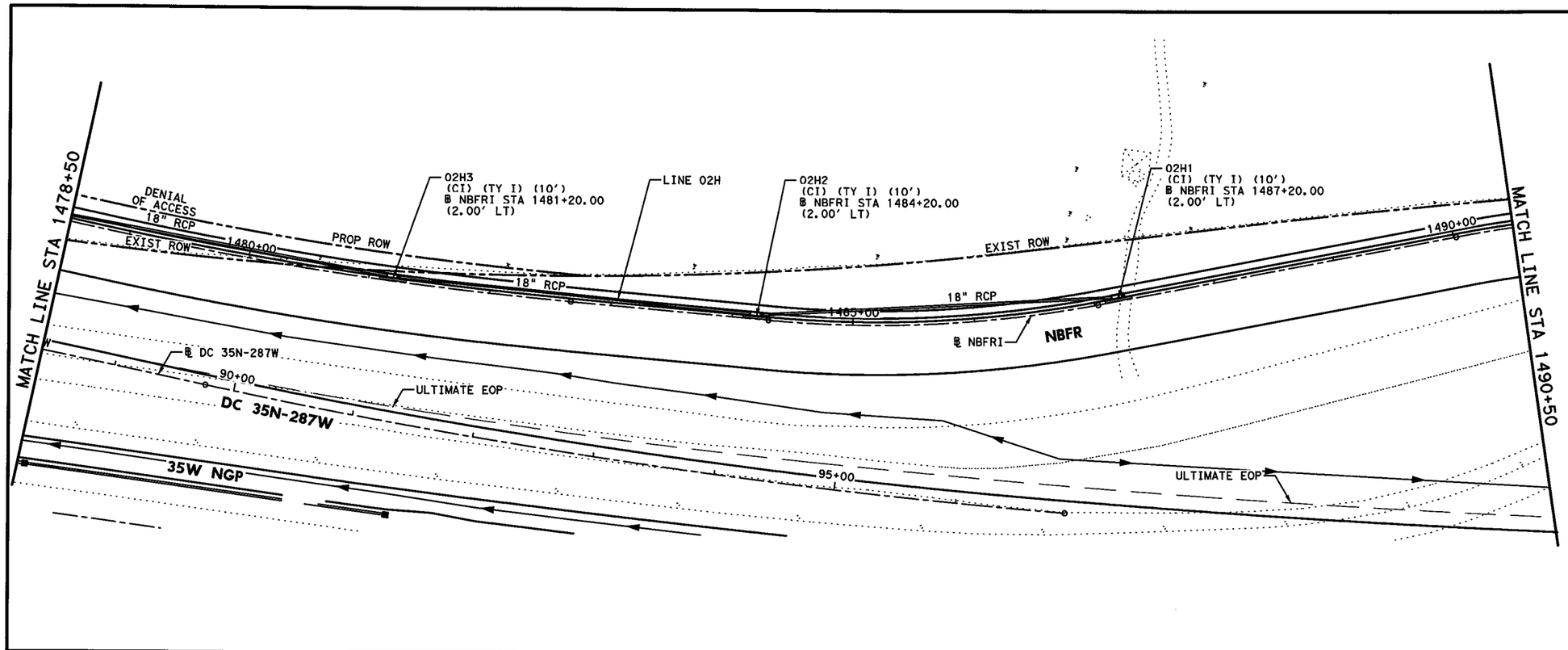

HORZ 0' 25' 50' 100'

SCALE IN FEET

GENERAL NOTES

1. ALL LOCATIONS FOR CURB INLETS ARE SHOWN TO THE FACE OF CURB.
2. ALL LOCATIONS FOR DITCH INLETS, GRATE INLETS, AND MANHOLES ARE SHOWN TO CENTER POINT (CP) OF INLET BOX OR MANHOLE BOX.
3. REFERENCE ROADWAY PLAN AND PROFILE SHEETS FOR ADDITIONAL INFORMATION.
4. REFERENCE CULVERT PLAN AND PROFILE SHEETS FOR ADDITIONAL INFORMATION.
5. REFERENCE DRIVEWAY DETAIL SHEETS FOR ADDITIONAL INFORMATION.
6. (GI) = GRATE INLET (DI) = DROP INLET
   (CI) = CURB INLET (MH) = MANHOLE
   (TR) = TOP OF RIM (TG) = TOP OF GRATE
   (TC) = TOP OF CURB
   (W/DB) = WITH DITCH BLOCK
7. GEOPAK DRAINAGE WAS USED FOR THE STORM SEWER DESIGN COMPUTATIONS.
8. HGL REFLECTS 10 YR DESIGN STORM.
9. REFER TO CROSS-SECTIONS FOR DITCH INFORMATION.

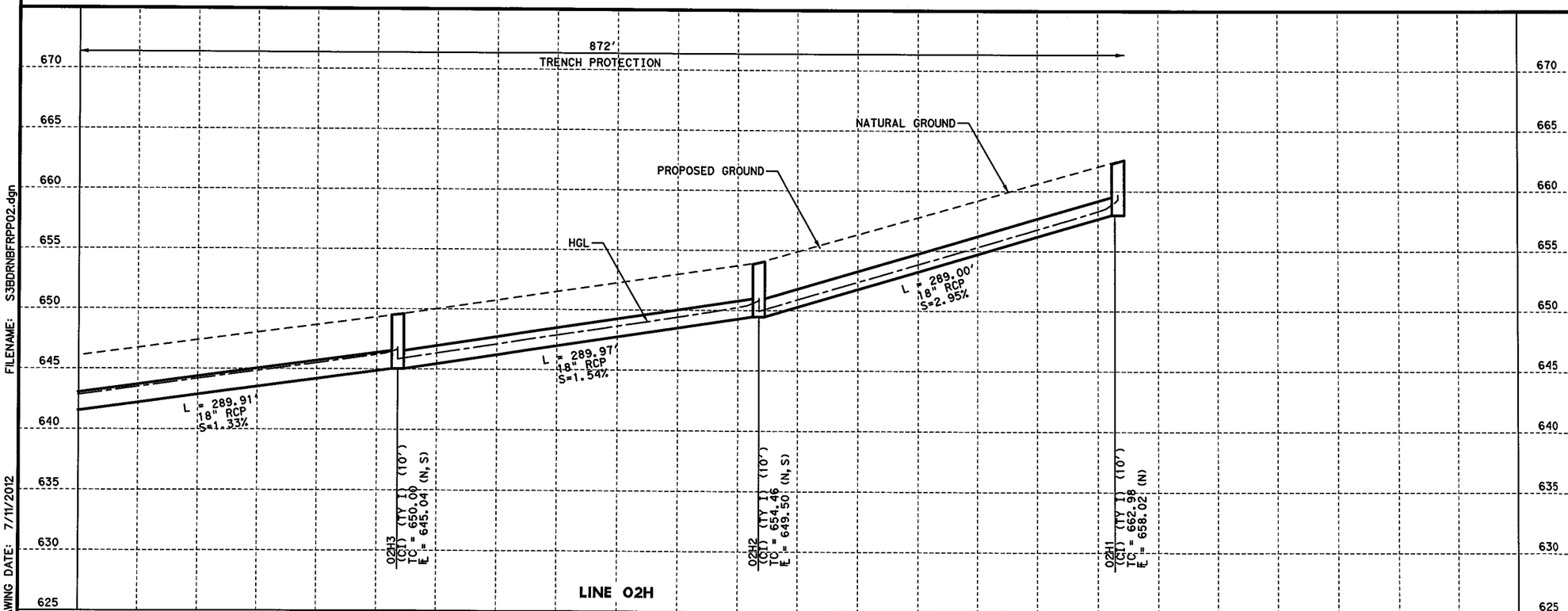

STATE OF TEXAS
SHAFEE YUSUF
94963
LICENSED PROFESSIONAL ENGINEER
7/11/12

I. S. ENGINEERS, LLC
TBPE REG. # F-11657

Texas Department of Transportation
© 2012

IH 35W FROM NORTH TARRANT PKWY TO IH 820

DRAINAGE PLAN & PROFILE

NBFR

STA 1478+50 TO STA 1490+50

SCALE: 1" = 100' H, 1" = 10' V

SHEET 2 OF 8

DESIGN	FED.RD. DIV.NO.	FEDERAL AID PROJECT NO.		HIGHWAY NO.
BV	6	(SEE TITLE SHEET)		IH 35W
GRAPHICS ZS	STATE	DISTRICT	COUNTY	SHEET NO.
CHECK SY	TEXAS	FTW	TARRANT	1250
CHECK	CONTROL	SECTION	JOB	
MNM	0014	16	255, ETC.	

FILENAME: S3BDRNBFRPP02.dgn

DRAWING DATE: 7/11/2012

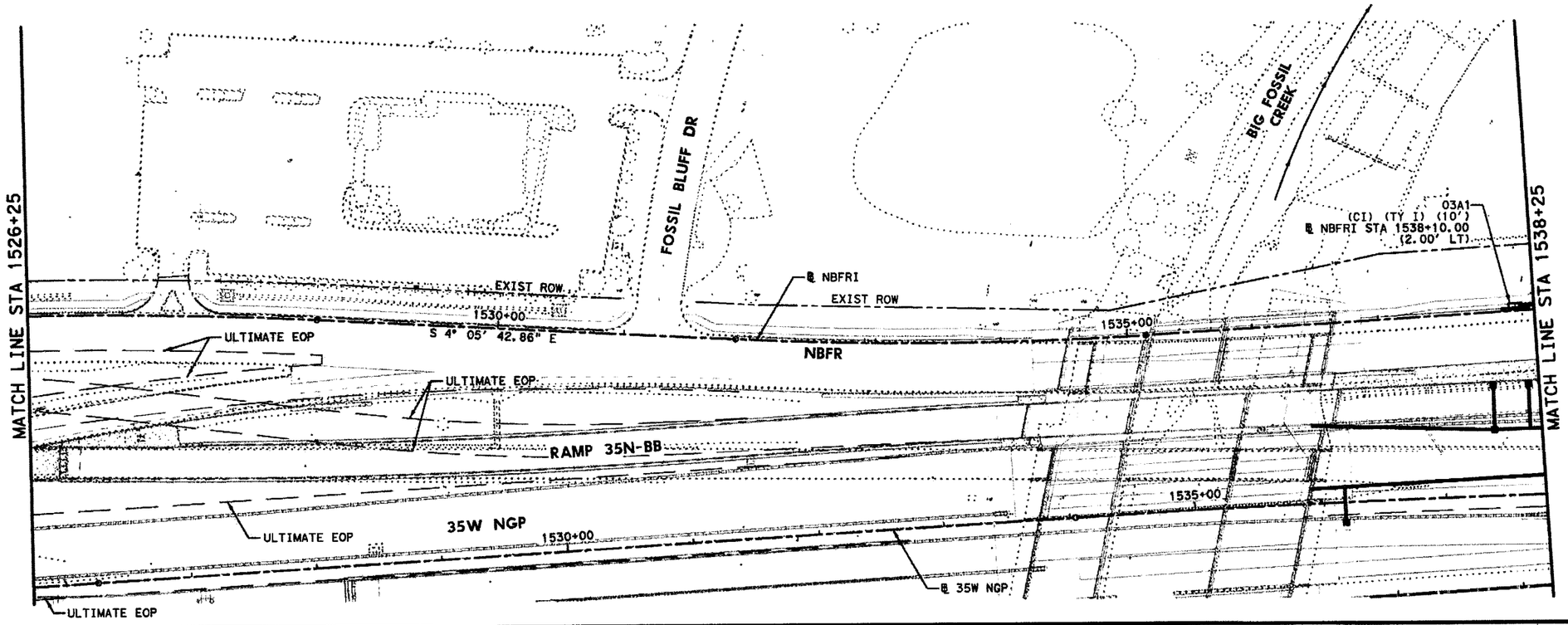

HORZ 0' 25' 50' 100'
VERT 0' 5' 10'
SCALE IN FEET

GENERAL NOTES

1. ALL LOCATIONS FOR CURB INLETS ARE SHOWN TO THE FACE OF CURB.
2. ALL LOCATIONS FOR DITCH INLETS, GRATE INLETS, AND MANHOLES ARE SHOWN TO CENTER POINT (CP) OF INLET BOX OR MANHOLE BOX.
3. REFERENCE ROADWAY PLAN AND PROFILE SHEETS FOR ADDITIONAL INFORMATION.
4. REFERENCE CULVERT PLAN AND PROFILE SHEETS FOR ADDITIONAL INFORMATION.
5. REFERENCE DRIVEWAY DETAIL SHEETS FOR ADDITIONAL INFORMATION.
6. (GI) = GRATE INLET (DI) = DROP INLET
   (CI) = CURB INLET (MH) = MANHOLE
   (TR) = TOP OF RIM (TG) = TOP OF GRATE
   (TC) = TOP OF CURB
   (W/DB) = WITH DITCH BLOCK
7. GEOPAK DRAINAGE WAS USED FOR THE STORM SEWER DESIGN COMPUTATIONS.
8. HGL REFLECTS 10 YR DESIGN STORM.
9. REFER TO CROSS-SECTIONS FOR DITCH INFORMATION.

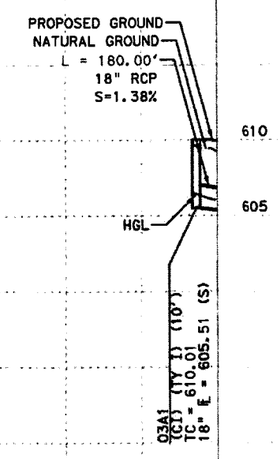

STATE OF TEXAS
RYAN S. HAGUE
100898
LICENSED
PROFESSIONAL ENGINEER
7/9/12

CP&Y, INC.
TBPE REGISTRATION NO. F-1741

Texas Department of Transportation
© 2012

IH 35W FROM NORTH TARRANT PKWY TO IH 820

DRAINAGE PLAN & PROFILE

NBFR

STA 1526+25 TO STA 1538+25

SCALE: 1" = 100' H, 1" = 10' V — SHEET 3 OF 8

DESIGN	FED.RD. DIV.NO.	FEDERAL AID PROJECT NO.		HIGHWAY NO.
CPY	6	(SEE TITLE SHEET)		IH 35W
GRAPHICS	STATE	DISTRICT	COUNTY	SHEET NO.
CPY	TEXAS	FTW	TARRANT	
CHECK	CONTROL	SECTION	JOB	
CPY	0014	16	255, ETC.	1251

DRAWING DATE: 7/13/2012 FILENAME: S3BNBDPP06.dgn

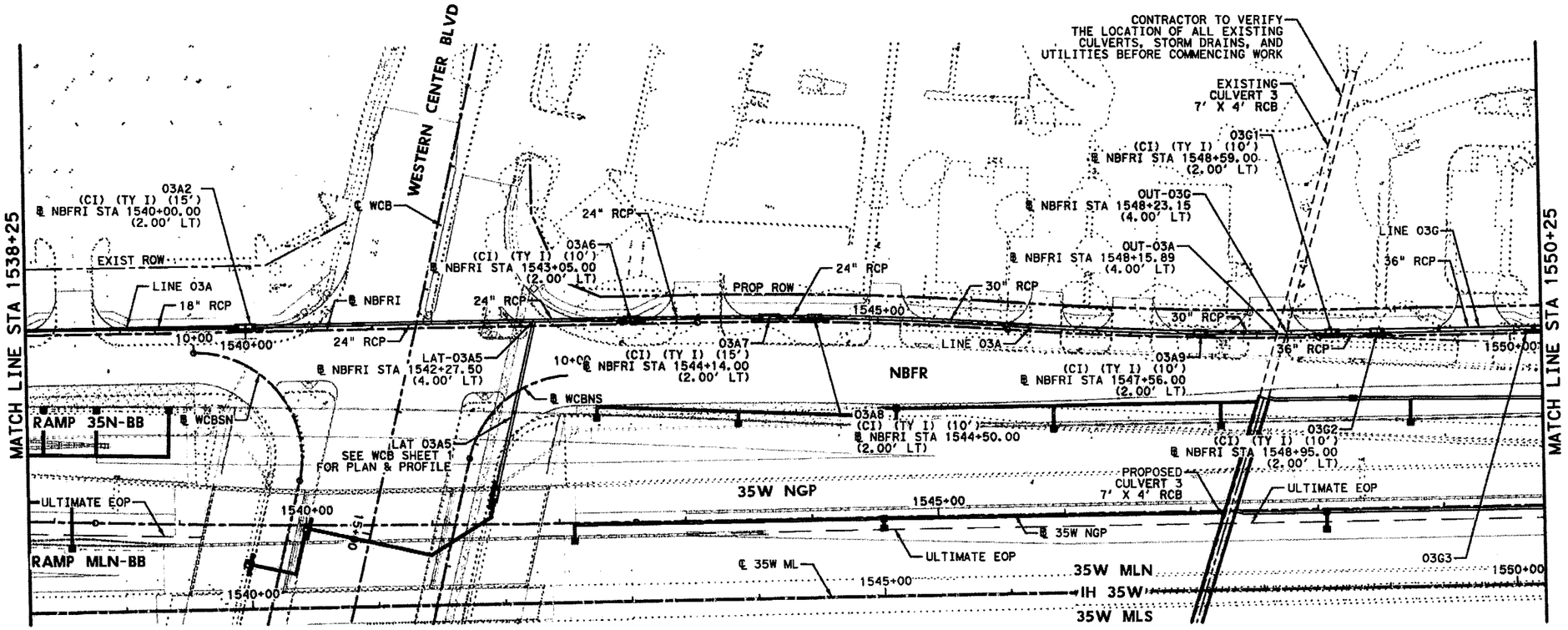

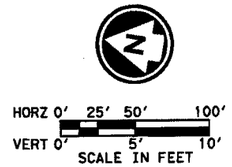

GENERAL NOTES

1. ALL LOCATIONS FOR CURB INLETS ARE SHOWN TO THE FACE OF CURB.
2. ALL LOCATIONS FOR DITCH INLETS, GRATE INLETS, AND MANHOLES ARE SHOWN TO CENTER POINT (CP) OF INLET BOX OR MANHOLE BOX.
3. REFERENCE ROADWAY PLAN AND PROFILE SHEETS FOR ADDITIONAL INFORMATION.
4. REFERENCE CULVERT PLAN AND PROFILE SHEETS FOR ADDITIONAL INFORMATION.
5. REFERENCE DRIVEWAY DETAIL SHEETS FOR ADDITIONAL INFORMATION.
6. (GI) = GRATE INLET (DI) = DROP INLET
   (CI) = CURB INLET (MH) = MANHOLE
   (TR) = TOP OF RIM (TG) = TOP OF GRATE
   (TC) = TOP OF CURB
   (W/DB) = WITH DITCH BLOCK
7. GEOPAK DRAINAGE WAS USED FOR THE STORM SEWER DESIGN COMPUTATIONS.
8. HGL REFLECTS 10 YR DESIGN STORM.
9. REFER TO CROSS-SECTIONS FOR DITCH INFORMATION.

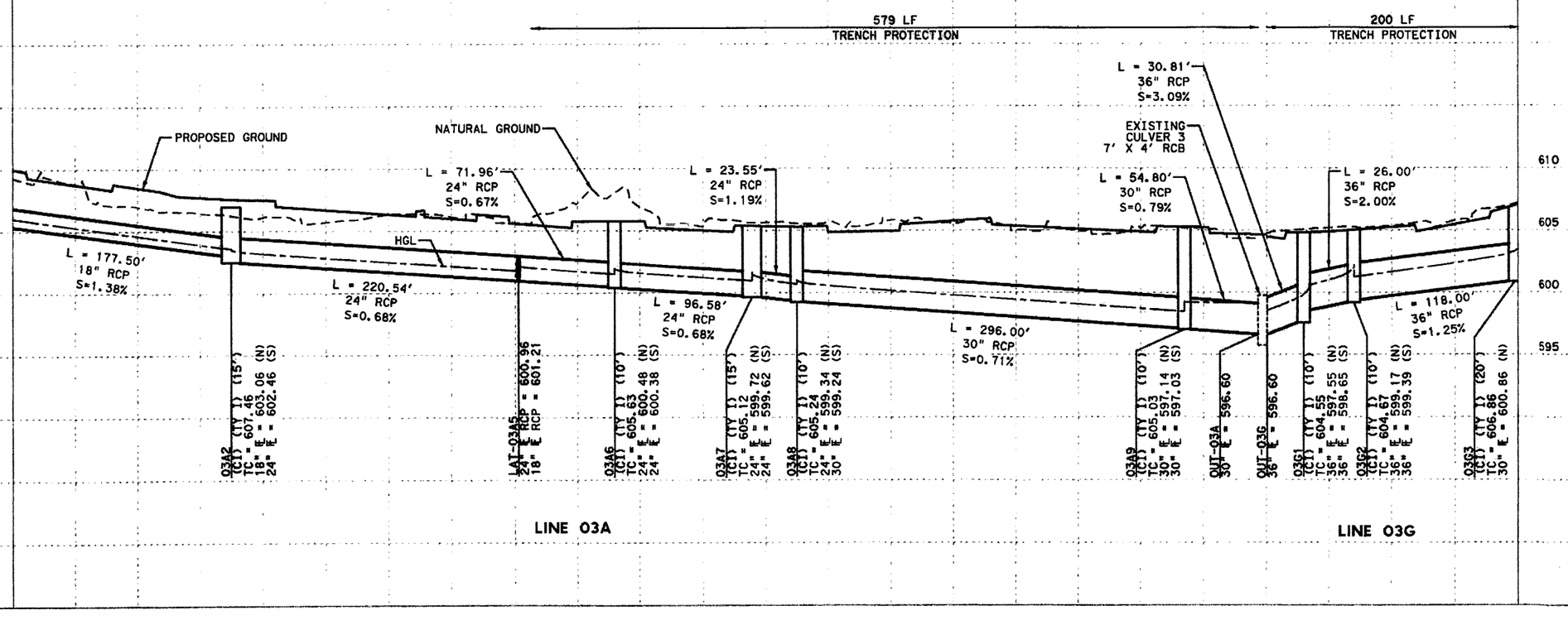

STATE OF TEXAS
RYAN S. HAGUE
100898
LICENSED
PROFESSIONAL ENGINEER
7/9/12

CP&Y, INC.
TBPE REGISTRATION NO. F-1741

Texas Department of Transportation
© 2012

IH 35W FROM NORTH TARRANT PKWY TO IH 820

DRAINAGE PLAN & PROFILE

NBFR

STA 1538+25 TO STA 1550+25

SCALE: 1" = 100' H, 1" = 10' V — SHEET 4 OF 8

DESIGN	FED. RD. DIV. NO.	FEDERAL AID PROJECT NO.		HIGHWAY NO.
CPY	6	(SEE TITLE SHEET)		IH 35W
GRAPHICS CPY	STATE	DISTRICT	COUNTY	SHEET NO.
CHECK CPY	TEXAS	FTW	TARRANT	1252
CHECK CPY	CONTROL	SECTION	JOB	
	0014	16	255, ETC.	

FILENAME: S3BNBDPP07.dgn

DRAWING DATE: 7/13/2012

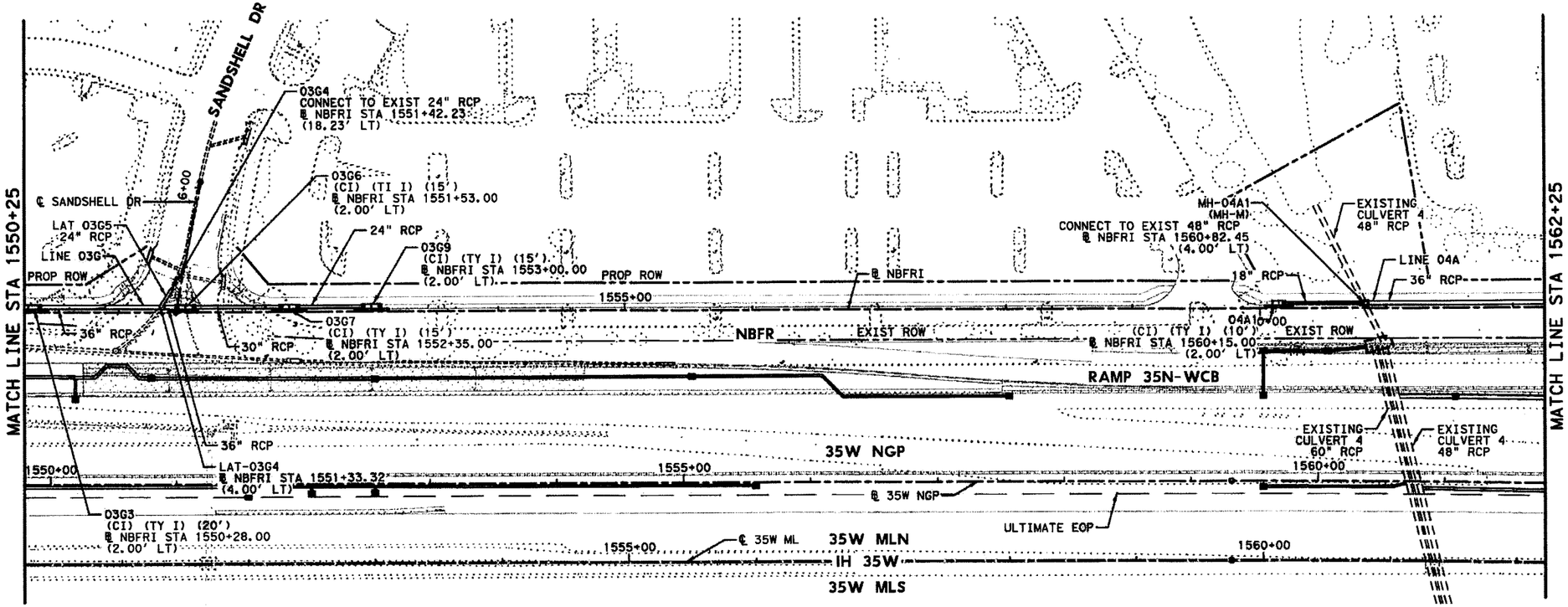

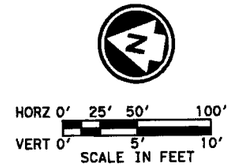

GENERAL NOTES

1. ALL LOCATIONS FOR CURB INLETS ARE SHOWN TO THE FACE OF CURB.
2. ALL LOCATIONS FOR DITCH INLETS, GRATE INLETS, AND MANHOLES ARE SHOWN TO CENTER POINT (CP) OF INLET BOX OR MANHOLE BOX.
3. REFERENCE ROADWAY PLAN AND PROFILE SHEETS FOR ADDITIONAL INFORMATION.
4. REFERENCE CULVERT PLAN AND PROFILE SHEETS FOR ADDITIONAL INFORMATION.
5. REFERENCE DRIVEWAY DETAIL SHEETS FOR ADDITIONAL INFORMATION.
6. (GI) = GRATE INLET (DI) = DROP INLET
   (CI) = CURB INLET (MH) = MANHOLE
   (TR) = TOP OF RIM (TG) = TOP OF GRATE
   (TC) = TOP OF CURB
   (W/DB) = WITH DITCH BLOCK
7. GEOPAK DRAINAGE WAS USED FOR THE STORM SEWER DESIGN COMPUTATIONS.
8. HGL REFLECTS 10 YR DESIGN STORM.
9. REFER TO CROSS-SECTIONS FOR DITCH INFORMATION.

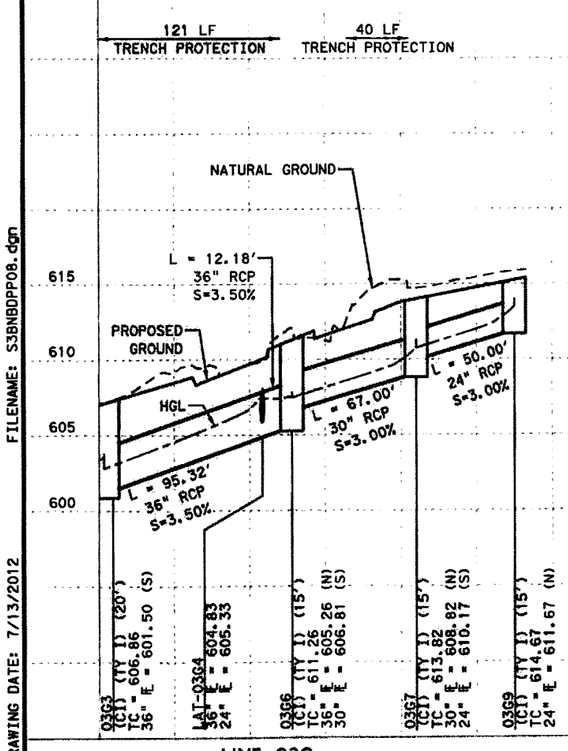

LINE 03G

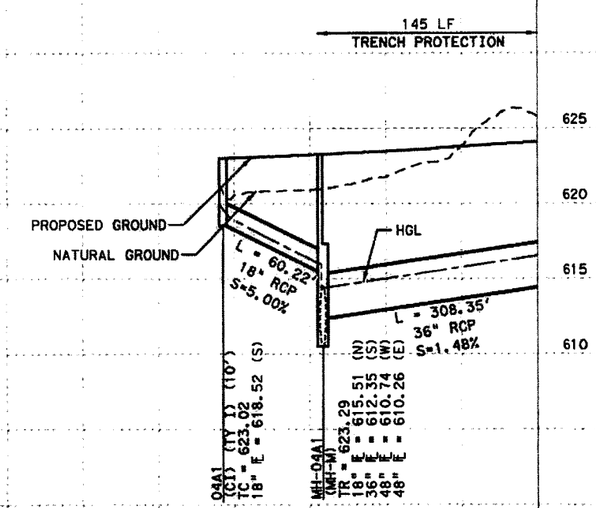

LINE 04A

STATE OF TEXAS
RYAN S. HAGUE
100898
LICENSED
PROFESSIONAL ENGINEER
7/9/12

CP&Y, INC.
TBPE REGISTRATION NO. F-1741

Texas Department of Transportation
© 2012

IH 35W FROM NORTH TARRANT PKWY TO IH 820

DRAINAGE PLAN & PROFILE

NBFR

STA 1550+25 TO STA 1562+25

SCALE: 1" = 100' H, 1" = 10' V — SHEET 5 OF 8

DESIGN	FED. RD. DIV. NO.	FEDERAL AID PROJECT NO.		HIGHWAY NO.
CPY	6	(SEE TITLE SHEET)		IH 35W
GRAPHICS CPY	STATE	DISTRICT	COUNTY	SHEET NO.
CHECK CPY	TEXAS	FTW	TARRANT	1253
CHECK CPY	CONTROL 0014	SECTION 16	JOB 255, ETC.	

FILENAME: S38NBDPP08.dgn

DRAWING DATE: 7/13/2012

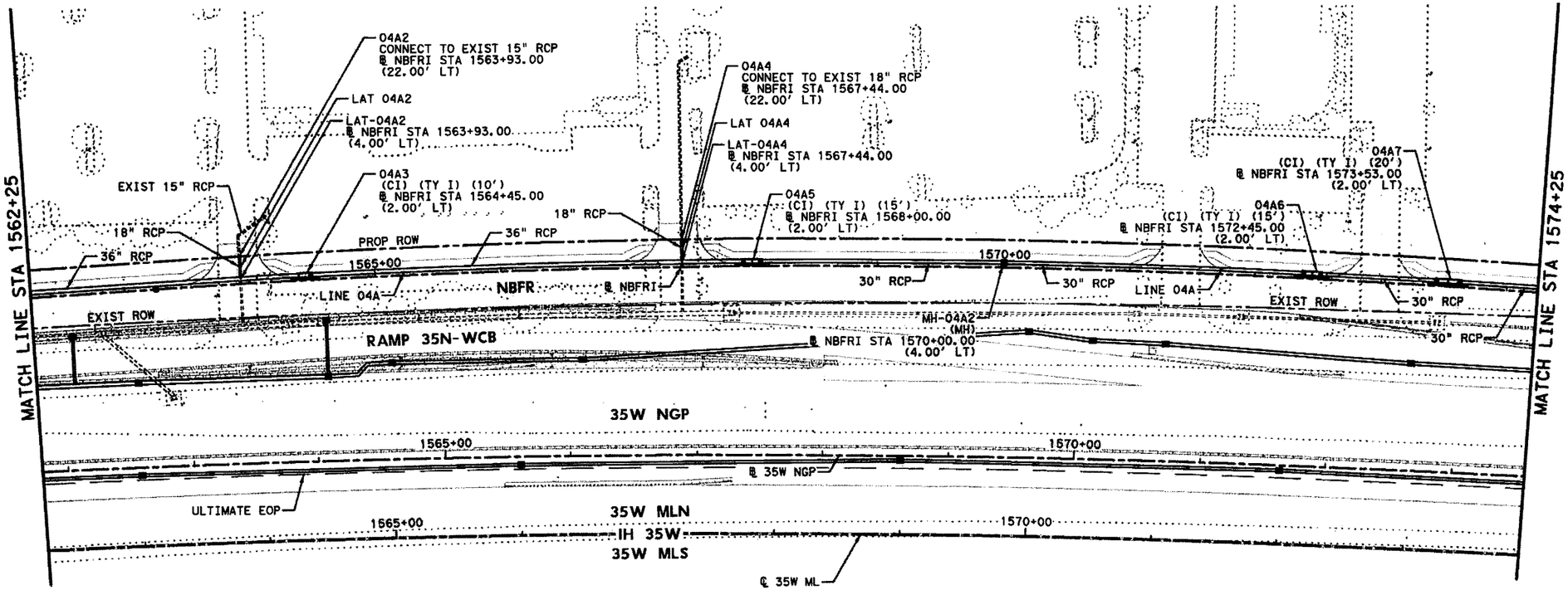

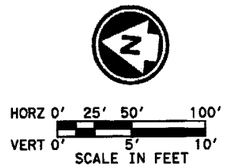

GENERAL NOTES

1. ALL LOCATIONS FOR CURB INLETS ARE SHOWN TO THE FACE OF CURB.
2. ALL LOCATIONS FOR DITCH INLETS, GRATE INLETS, AND MANHOLES ARE SHOWN TO CENTER POINT (CP) OF INLET BOX OR MANHOLE BOX.
3. REFERENCE ROADWAY PLAN AND PROFILE SHEETS FOR ADDITIONAL INFORMATION.
4. REFERENCE CULVERT PLAN AND PROFILE SHEETS FOR ADDITIONAL INFORMATION.
5. REFERENCE DRIVEWAY DETAIL SHEETS FOR ADDITIONAL INFORMATION.
6. (GI) = GRATE INLET (DI) = DROP INLET
   (CI) = CURB INLET (MH) = MANHOLE
   (TR) = TOP OF RIM (TG) = TOP OF GRATE
   (TC) = TOP OF CURB
   (W/DB) = WITH DITCH BLOCK
7. GEOPAK DRAINAGE WAS USED FOR THE STORM SEWER DESIGN COMPUTATIONS.
8. HGL REFLECTS 10 YR DESIGN STORM.
9. REFER TO CROSS-SECTIONS FOR DITCH INFORMATION.

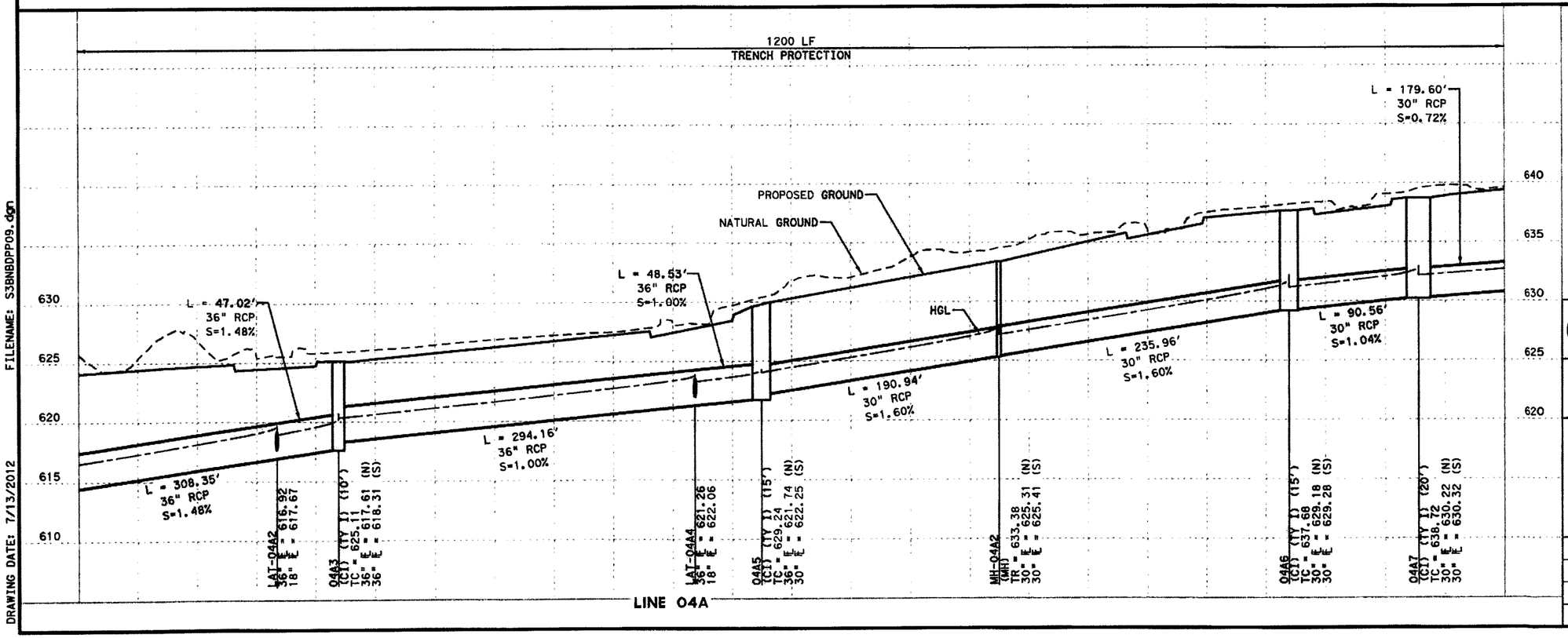

STATE OF TEXAS
RYAN S. HAGUE
100898
LICENSED
PROFESSIONAL ENGINEER
7/9/12

CP&Y, INC.
TBPE REGISTRATION NO. F-1741

Texas Department of Transportation
© 2012

IH 35W FROM NORTH TARRANT PKWY TO IH 820

DRAINAGE PLAN & PROFILE

NBFR

STA 1562+25 TO STA 1574+25

SCALE: 1" = 100' H, 1" = 10' V — SHEET 6 OF 8

DESIGN	FED. RD. DIV. NO.	FEDERAL AID PROJECT NO.		HIGHWAY NO.
CPY	6	(SEE TITLE SHEET)		IH 35W
GRAPHICS CPY	STATE	DISTRICT	COUNTY	SHEET NO.
CHECK CPY	TEXAS	FTW	TARRANT	1254
CHECK CPY	CONTROL	SECTION	JOB	
	0014	16	255, ETC.	

FILENAME: S3BNBDPP09.dgn

DRAWING DATE: 7/13/2012

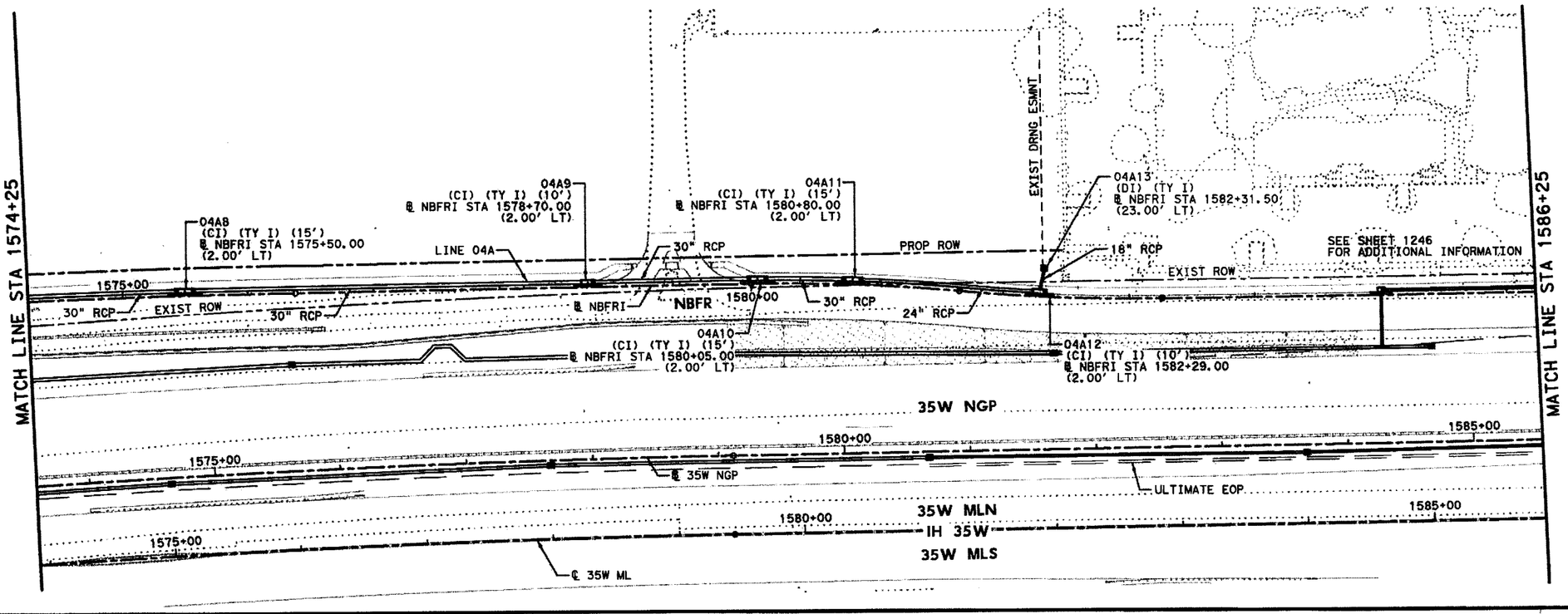

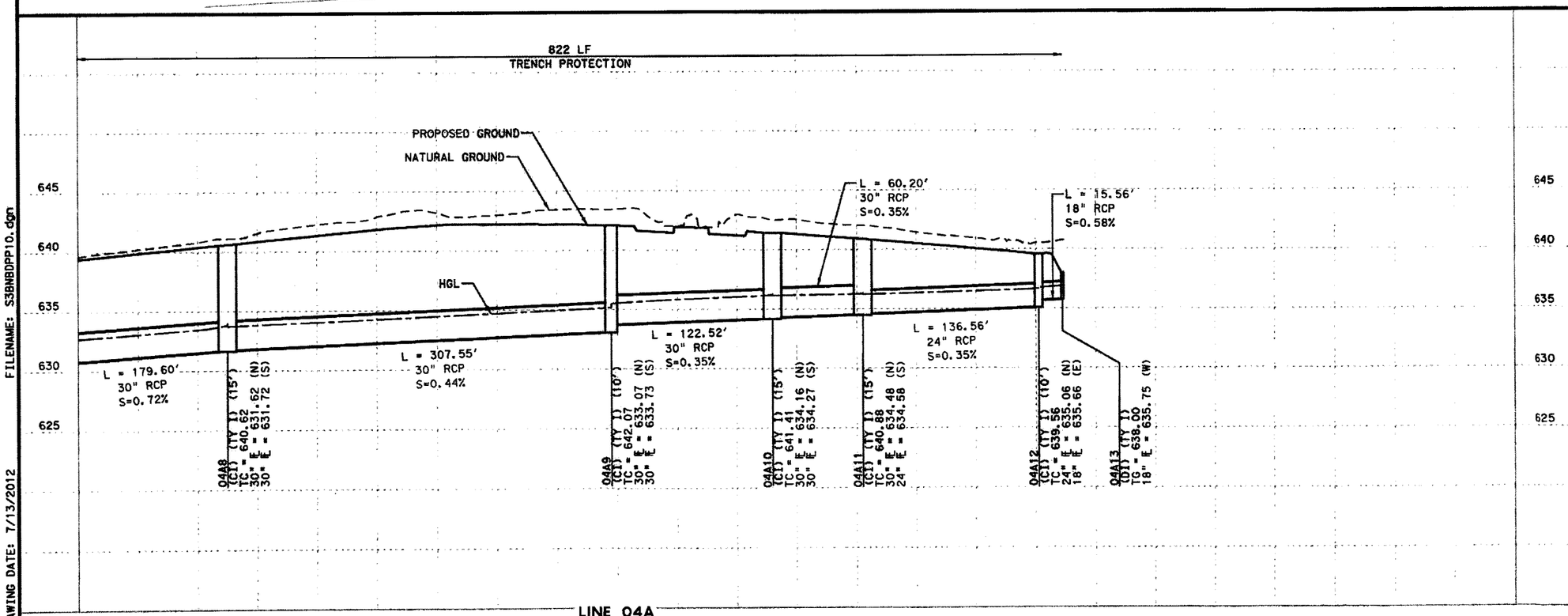

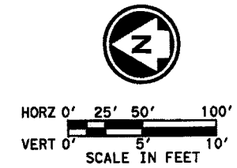

GENERAL NOTES

1. ALL LOCATIONS FOR CURB INLETS ARE SHOWN TO THE FACE OF CURB.
2. ALL LOCATIONS FOR DITCH INLETS, GRATE INLETS, AND MANHOLES ARE SHOWN TO CENTER POINT (CP) OF INLET BOX OR MANHOLE BOX.
3. REFERENCE ROADWAY PLAN AND PROFILE SHEETS FOR ADDITIONAL INFORMATION.
4. REFERENCE CULVERT PLAN AND PROFILE SHEETS FOR ADDITIONAL INFORMATION.
5. REFERENCE DRIVEWAY DETAIL SHEETS FOR ADDITIONAL INFORMATION.
6. (GI) = GRATE INLET (DI) = DROP INLET
   (CI) = CURB INLET (MH) = MANHOLE
   (TR) = TOP OF RIM (TG) = TOP OF GRATE
   (TC) = TOP OF CURB
   (W/DB) = WITH DITCH BLOCK
7. GEOPAK DRAINAGE WAS USED FOR THE STORM SEWER DESIGN COMPUTATIONS.
8. HGL REFLECTS 10 YR DESIGN STORM.
9. REFER TO CROSS-SECTIONS FOR DITCH INFORMATION.

STATE OF TEXAS
RYAN S. HAGUE
100898
LICENSED
PROFESSIONAL ENGINEER
7/9/12

CP&Y, INC.
TBPE REGISTRATION NO. F-1741

Texas Department of Transportation
© 2012

IH 35W FROM NORTH TARRANT PKWY TO IH 820

DRAINAGE PLAN & PROFILE

NBFR

STA 1574+25 TO STA 1586+25

SCALE: 1" = 100' H, 1" = 10' V — SHEET 7 OF 8

DESIGN	FED. RD. DIV. NO.	FEDERAL AID PROJECT NO.		HIGHWAY NO.
CPY	6	(SEE TITLE SHEET)		IH 35W
GRAPHICS CPY	STATE	DISTRICT	COUNTY	SHEET NO.
CHECK CPY	TEXAS	FTW	TARRANT	1255
CHECK CPY	CONTROL	SECTION	JOB	
	0014	16	255, ETC.	

FILENAME: S3BNBDPP10.dgn

DRAWING DATE: 7/13/2012

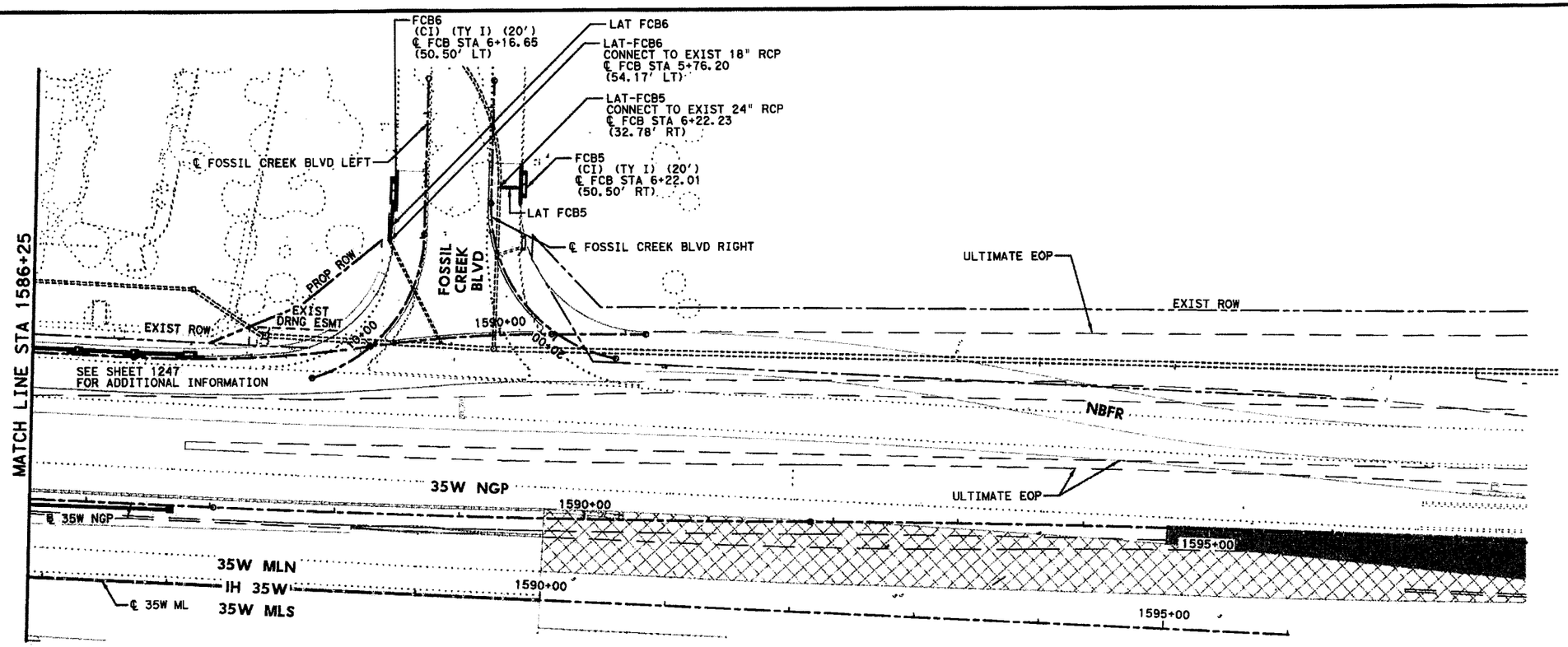

HORZ 0' 25' 50' 100'
VERT 0' 5' 10'
SCALE IN FEET

GENERAL NOTES

1. ALL LOCATIONS FOR CURB INLETS ARE SHOWN TO THE FACE OF CURB.
2. ALL LOCATIONS FOR DITCH INLETS, GRATE INLETS, AND MANHOLES ARE SHOWN TO CENTER POINT (CP) OF INLET BOX OR MANHOLE BOX.
3. REFERENCE ROADWAY PLAN AND PROFILE SHEETS FOR ADDITIONAL INFORMATION.
4. REFERENCE CULVERT PLAN AND PROFILE SHEETS FOR ADDITIONAL INFORMATION.
5. REFERENCE DRIVEWAY DETAIL SHEETS FOR ADDITIONAL INFORMATION.
6. (GI) = GRATE INLET (DI) = DROP INLET
   (CI) = CURB INLET (MH) = MANHOLE
   (TR) = TOP OF RIM (TG) = TOP OF GRATE
   (TC) = TOP OF CURB
   (W/DB) = WITH DITCH BLOCK
7. GEOPAK DRAINAGE WAS USED FOR THE STORM SEWER DESIGN COMPUTATIONS.
8. HGL REFLECTS 10 YR DESIGN STORM.
9. REFER TO CROSS-SECTIONS FOR DITCH INFORMATION.

STATE OF TEXAS
RYAN S. HAGUE
100898
LICENSED
PROFESSIONAL ENGINEER
7/9/12

CP&Y, INC.
TBPE REGISTRATION NO. F-1741

Texas Department of Transportation
© 2012

IH 35W FROM NORTH TARRANT PKWY TO IH 820

DRAINAGE PLAN & PROFILE

NBFR

STA 1586+25 TO STA END PROJECT

SCALE: 1" = 100' H, 1" = 10' V — SHEET 8 OF 8

DESIGN	FED. RD. DIV. NO.	FEDERAL AID PROJECT NO.		HIGHWAY NO.
CPY	6	(SEE TITLE SHEET)		IH 35W
GRAPHICS	STATE	DISTRICT	COUNTY	SHEET NO.
CPY	TEXAS	FTW	TARRANT	1256
CHECK	CONTROL	SECTION	JOB	
CPY	0014	16	255, ETC.	

CHECK CPY

DRAWING DATE: 7/13/2012 FILENAME: S3BNBDPP11.dgn

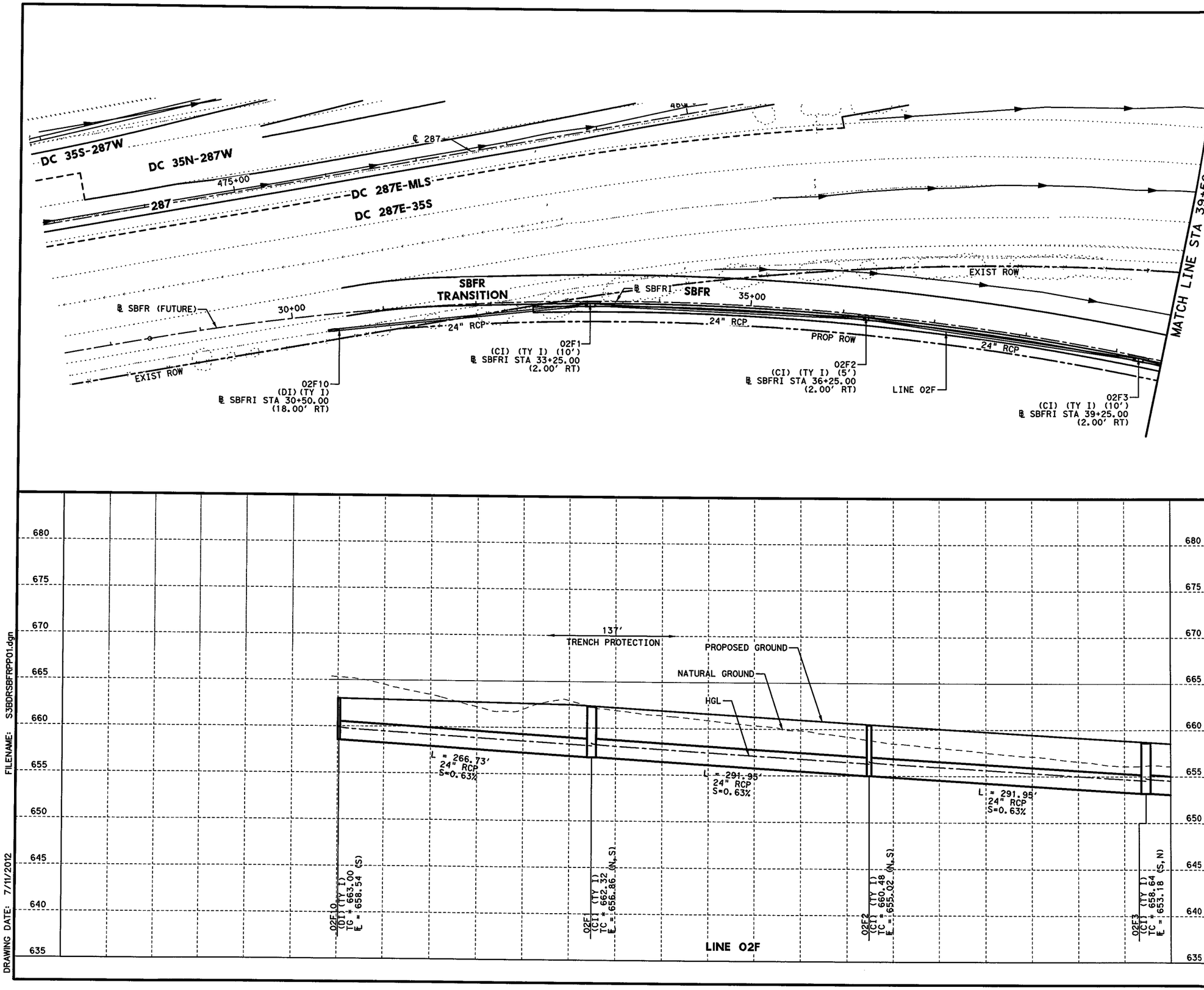

GENERAL NOTES

1. ALL LOCATIONS FOR CURB INLETS ARE SHOWN TO THE FACE OF CURB.
2. ALL LOCATIONS FOR DITCH INLETS, GRATE INLETS, AND MANHOLES ARE SHOWN TO CENTER POINT (CP) OF INLET BOX OR MANHOLE BOX.
3. REFERENCE ROADWAY PLAN AND PROFILE SHEETS FOR ADDITIONAL INFORMATION.
4. REFERENCE CULVERT PLAN AND PROFILE SHEETS FOR ADDITIONAL INFORMATION.
5. REFERENCE DRIVEWAY DETAIL SHEETS FOR ADDITIONAL INFORMATION.
6. (GI) = GRATE INLET (DI) = DROP INLET
   (CI) = CURB INLET (MH) = MANHOLE
   (TR) = TOP OF RIM (TG) = TOP OF GRATE
   (TC) = TOP OF CURB
   (W/DB) = WITH DITCH BLOCK
7. GEOPAK DRAINAGE WAS USED FOR THE STORM SEWER DESIGN COMPUTATIONS.
8. HGL REFLECTS 10 YR DESIGN STORM.
9. REFER TO CROSS-SECTIONS FOR DITCH INFORMATION.

STATE OF TEXAS
SHAFEE YUSUF
94963
LICENSED
PROFESSIONAL ENGINEER
7/11/12

I. S. ENGINEERS, LLC
TBPE REG. # F-11657

Texas Department of Transportation
© 2012

IH 35W FROM NORTH TARRANT PKWY TO IH 820

DRAINAGE PLAN & PROFILE

SBFR

STA 27+50 TO STA 39+50

SCALE: 1" = 100' H, 1" = 10' V

SHEET 1 OF 9

DESIGN	FED.RD. DIV.NO.	FEDERAL AID PROJECT NO.		HIGHWAY NO.
BV	6	(SEE TITLE SHEET)		IH 35W
GRAPHICS	STATE	DISTRICT	COUNTY	SHEET NO.
ZS	TEXAS	FTW	TARRANT	
CHECK	CONTROL	SECTION	JOB	
SY				1257
CHECK	0014	16	255, ETC.	
MNM				

FILENAME: S3BDRSBFRPP01.dgn

DRAWING DATE: 7/11/2012

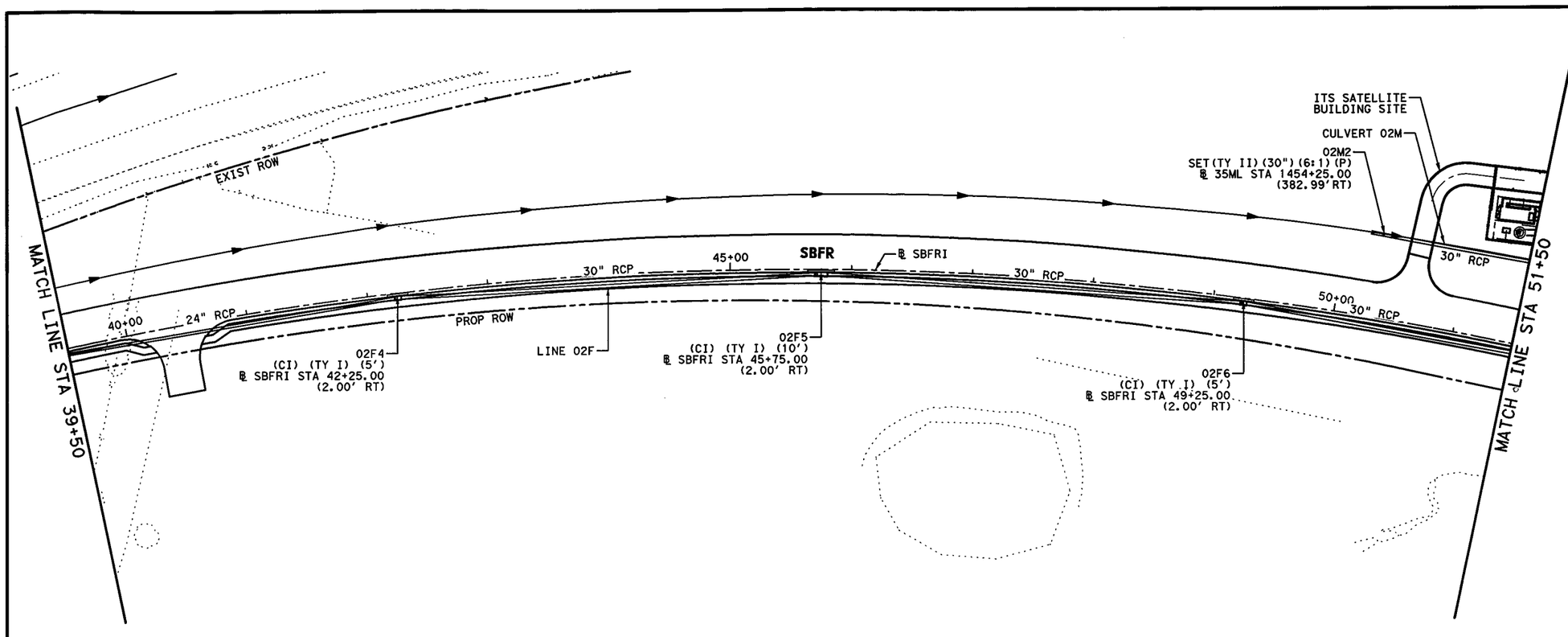

HORZ 0' 25' 50' 100'

SCALE IN FEET

GENERAL NOTES

1. ALL LOCATIONS FOR CURB INLETS ARE SHOWN TO THE FACE OF CURB.
2. ALL LOCATIONS FOR DITCH INLETS, GRATE INLETS, AND MANHOLES ARE SHOWN TO CENTER POINT (CP) OF INLET BOX OR MANHOLE BOX.
3. REFERENCE ROADWAY PLAN AND PROFILE SHEETS FOR ADDITIONAL INFORMATION.
4. REFERENCE CULVERT PLAN AND PROFILE SHEETS FOR ADDITIONAL INFORMATION.
5. REFERENCE DRIVEWAY DETAIL SHEETS FOR ADDITIONAL INFORMATION.
6. (GI) = GRATE INLET (DI) = DROP INLET
   (CI) = CURB INLET (MH) = MANHOLE
   (TR) = TOP OF RIM (TG) = TOP OF GRATE
   (TC) = TOP OF CURB
   (W/DB) = WITH DITCH BLOCK
7. GEOPAK DRAINAGE WAS USED FOR THE STORM SEWER DESIGN COMPUTATIONS.
8. HGL REFLECTS 10 YR DESIGN STORM.
9. REFER TO CROSS-SECTIONS FOR DITCH INFORMATION.

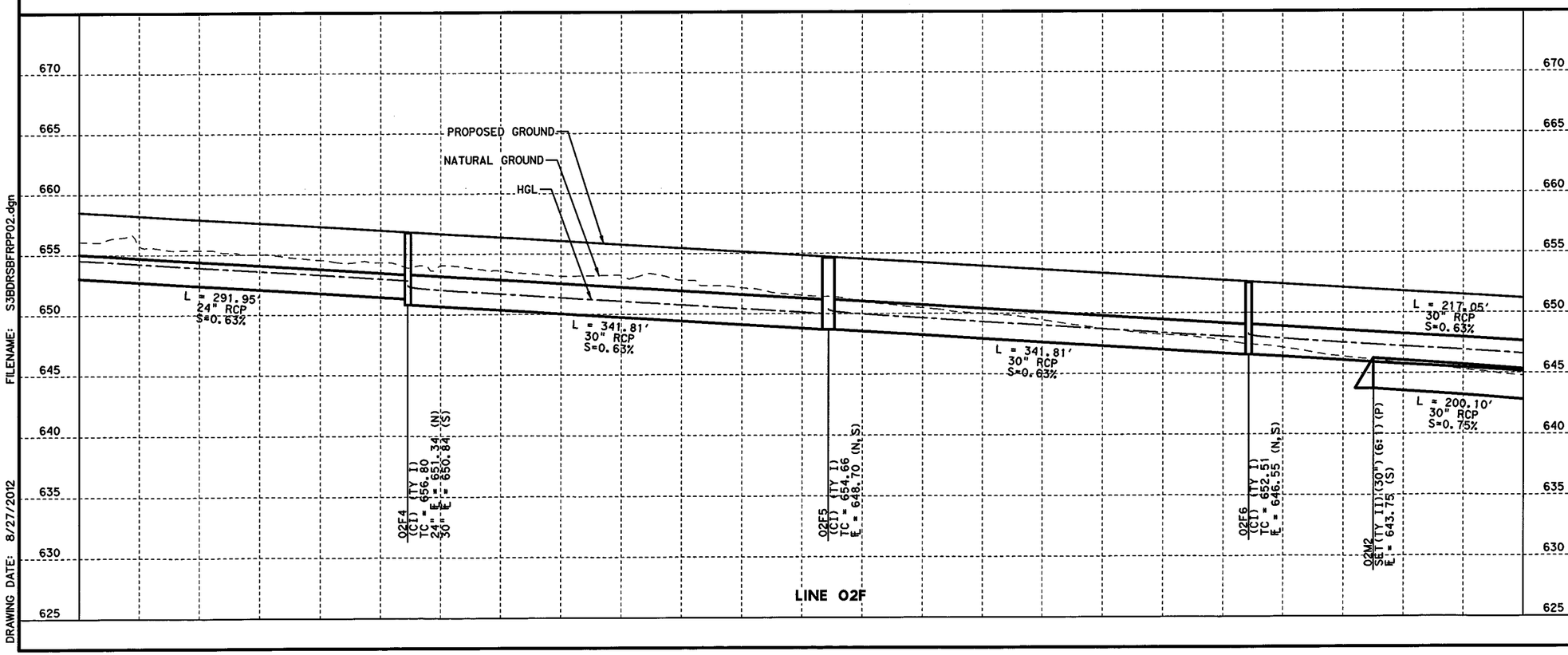

STATE OF TEXAS
SHAFEE YUSUF
94963
LICENSED
PROFESSIONAL ENGINEER

8/29/12

I. S. ENGINEERS, LLC
TBPE REG. # F-11657

Texas Department of Transportation
© 2012

IH 35W FROM NORTH TARRANT PKWY TO IH 820

DRAINAGE PLAN & PROFILE

SBFR

STA 39+50 TO STA 51+50

SCALE: 1" = 100' H, 1" = 10' V

SHEET 2 OF 9

DESIGN	FED.RD. DIV.NO.	FEDERAL AID PROJECT NO.		HIGHWAY NO.
BV	6	(SEE TITLE SHEET)		IH 35W
GRAPHICS	STATE	DISTRICT	COUNTY	SHEET NO.
ZS	TEXAS	FTW	TARRANT	
CHECK	CONTROL	SECTION	JOB	
SY	0014	16	255, ETC.	1258
CHECK				
MNM				

FILENAME: S3BDRSBFRPP02.dgn

DRAWING DATE: 8/27/2012

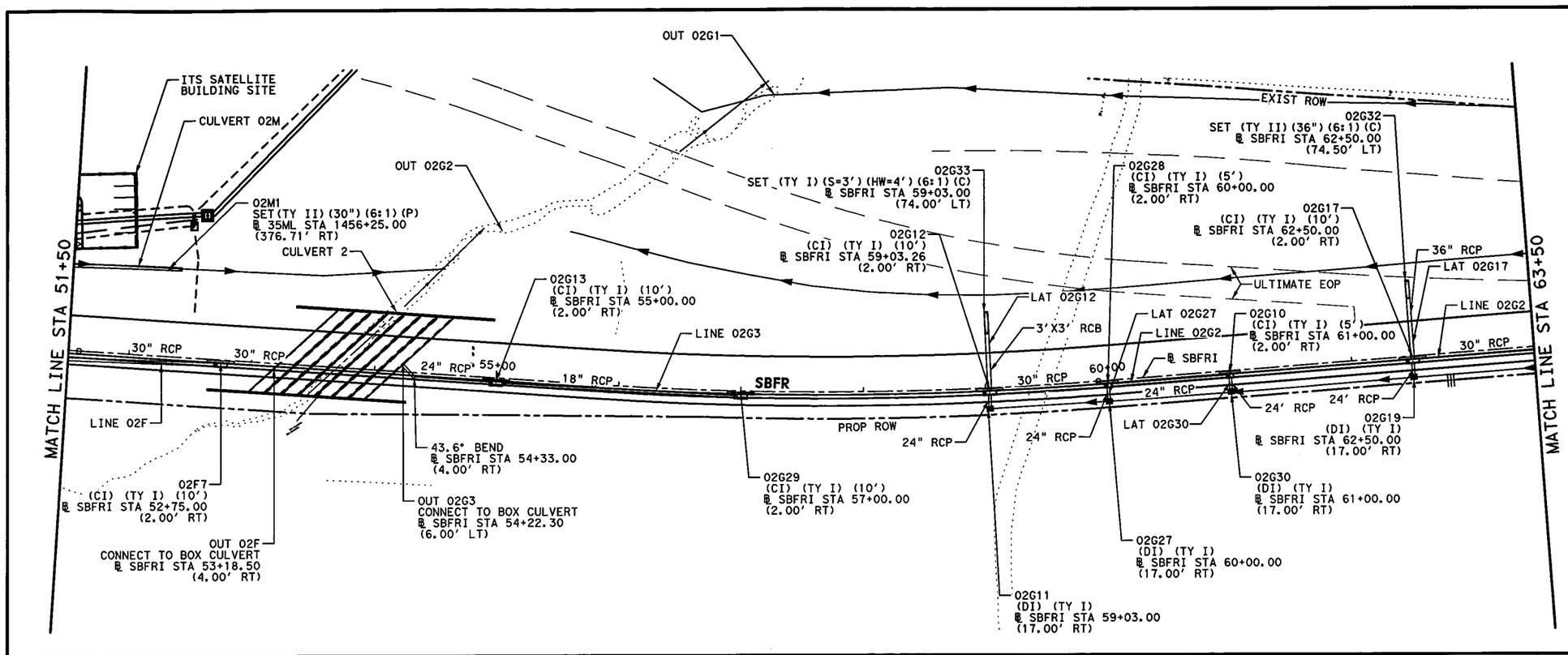

HORZ 0' 25' 50' 100'

SCALE IN FEET

GENERAL NOTES

1. ALL LOCATIONS FOR CURB INLETS ARE SHOWN TO THE FACE OF CURB.
2. ALL LOCATIONS FOR DITCH INLETS, GRATE INLETS, AND MANHOLES ARE SHOWN TO CENTER POINT (CP) OF INLET BOX OR MANHOLE BOX.
3. REFERENCE ROADWAY PLAN AND PROFILE SHEETS FOR ADDITIONAL INFORMATION.
4. REFERENCE CULVERT PLAN AND PROFILE SHEETS FOR ADDITIONAL INFORMATION.
5. REFERENCE DRIVEWAY DETAIL SHEETS FOR ADDITIONAL INFORMATION.
6. (GI) = GRATE INLET (DI) = DROP INLET
   (CI) = CURB INLET (MH) = MANHOLE
   (TR) = TOP OF RIM (TG) = TOP OF GRATE
   (TC) = TOP OF CURB
   (W/DB) = WITH DITCH BLOCK
7. GEOPAK DRAINAGE WAS USED FOR THE STORM SEWER DESIGN COMPUTATIONS.
8. HGL REFLECTS 10 YR DESIGN STORM.
9. REFER TO CROSS-SECTIONS FOR DITCH INFORMATION.

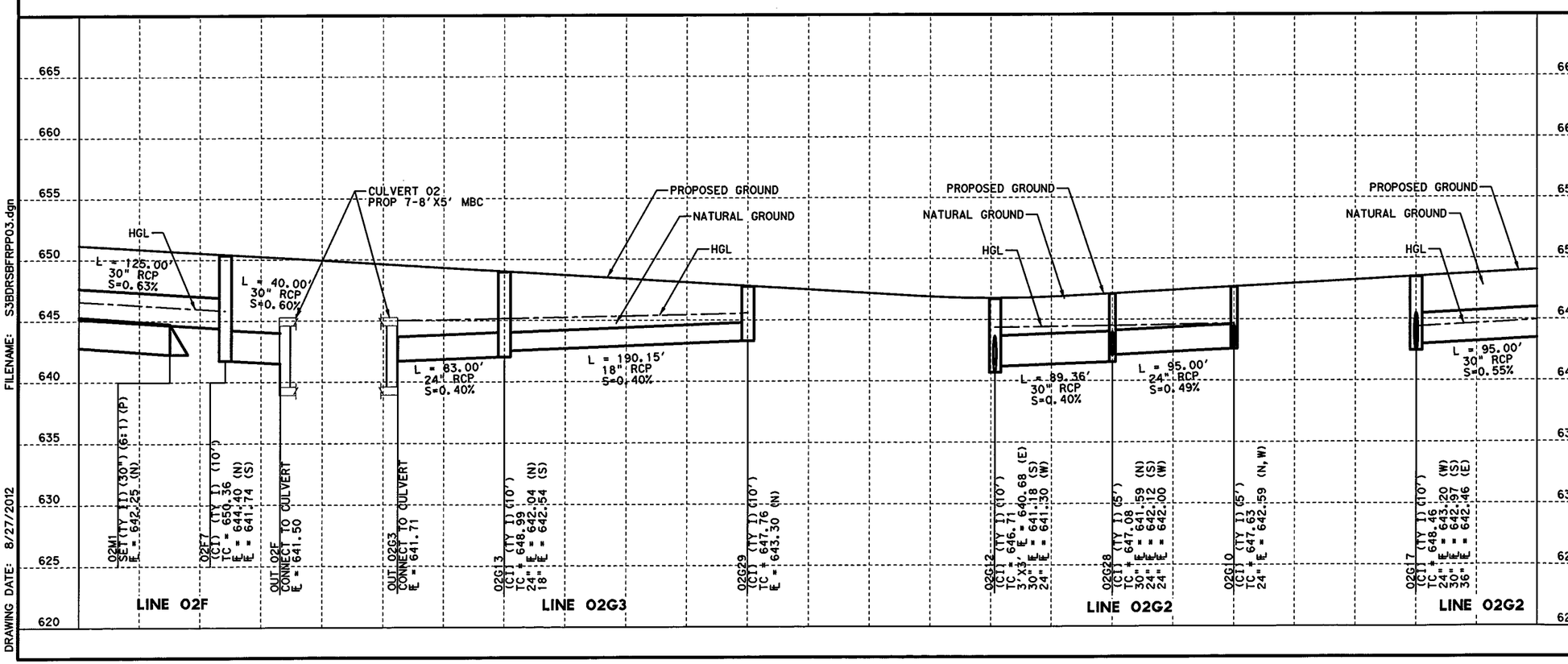

FILENAME: S3BDRSBFRPP03.dgn

DRAWING DATE: 8/27/2012

STATE OF TEXAS
SHAFEE YUSUF
94963
LICENSED
PROFESSIONAL ENGINEER

8/29/12

I. S. ENGINEERS, LLC

TBPE REG. # F-11657

Texas Department of Transportation

© 2012

IH 35W FROM NORTH TARRANT PKWY TO IH 820

DRAINAGE PLAN & PROFILE

SBFR

STA 51+50 TO STA 63+50

SCALE: 1" = 100' H, 1" = 10' V

SHEET 3 OF 9

DESIGN	FED.RD. DIV.NO.	FEDERAL AID PROJECT NO.		HIGHWAY NO.
BV	6	(SEE TITLE SHEET)		IH 35W
GRAPHICS	STATE	DISTRICT	COUNTY	SHEET NO.
ZS	TEXAS	FTW	TARRANT	
CHECK	CONTROL	SECTION	JOB	
SY	0014	16	255, ETC.	1259
CHECK				
MNM				

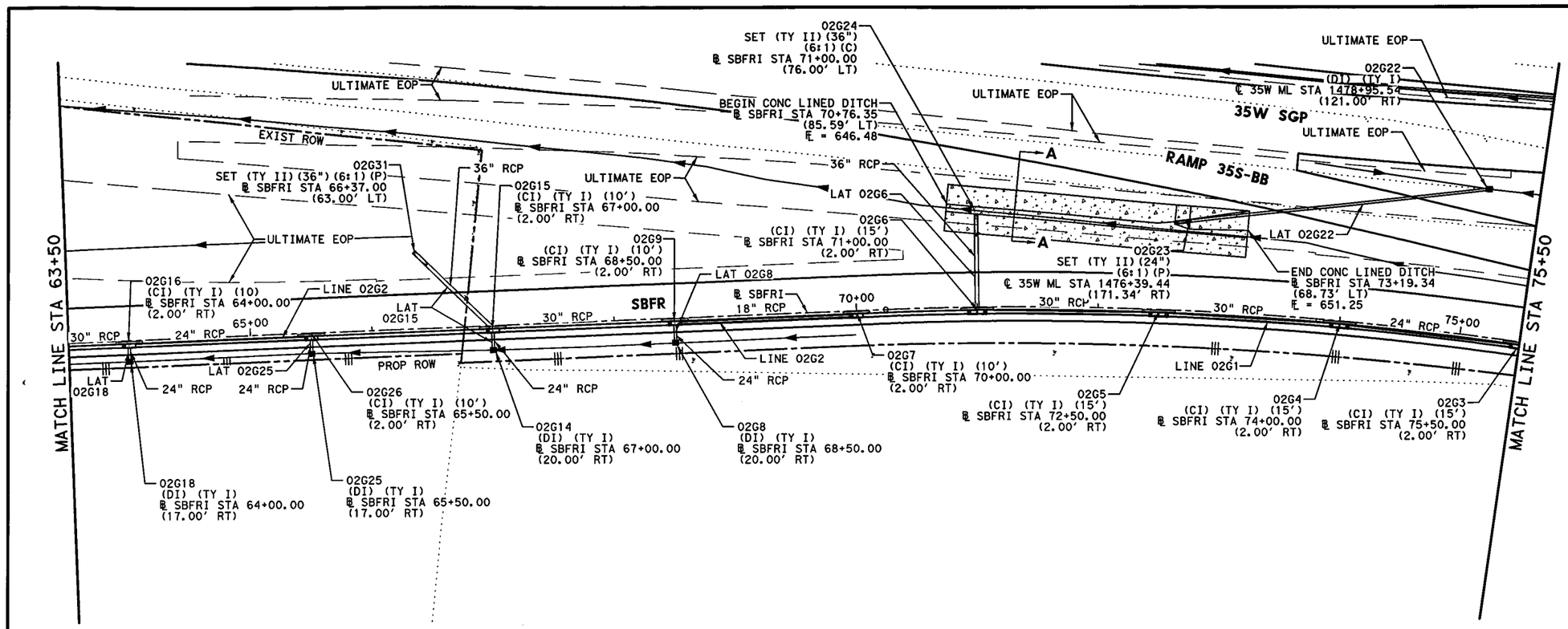

GENERAL NOTES

1. ALL LOCATIONS FOR CURB INLETS ARE SHOWN TO THE FACE OF CURB.
2. ALL LOCATIONS FOR DITCH INLETS, GRATE INLETS, AND MANHOLES ARE SHOWN TO CENTER POINT (CP) OF INLET BOX OR MANHOLE BOX.
3. REFERENCE ROADWAY PLAN AND PROFILE SHEETS FOR ADDITIONAL INFORMATION.
4. REFERENCE CULVERT PLAN AND PROFILE SHEETS FOR ADDITIONAL INFORMATION.
5. REFERENCE DRIVEWAY DETAIL SHEETS FOR ADDITIONAL INFORMATION.
6. (GI) = GRATE INLET (DI) = DROP INLET
   (CI) = CURB INLET (MH) = MANHOLE
   (TR) = TOP OF RIM (TG) = TOP OF GRATE
   (TC) = TOP OF CURB
   (W/DB) = WITH DITCH BLOCK
7. GEOPAK DRAINAGE WAS USED FOR THE STORM SEWER DESIGN COMPUTATIONS.
8. HGL REFLECTS 10 YR DESIGN STORM.
9. REFER TO CROSS-SECTIONS FOR DITCH INFORMATION.

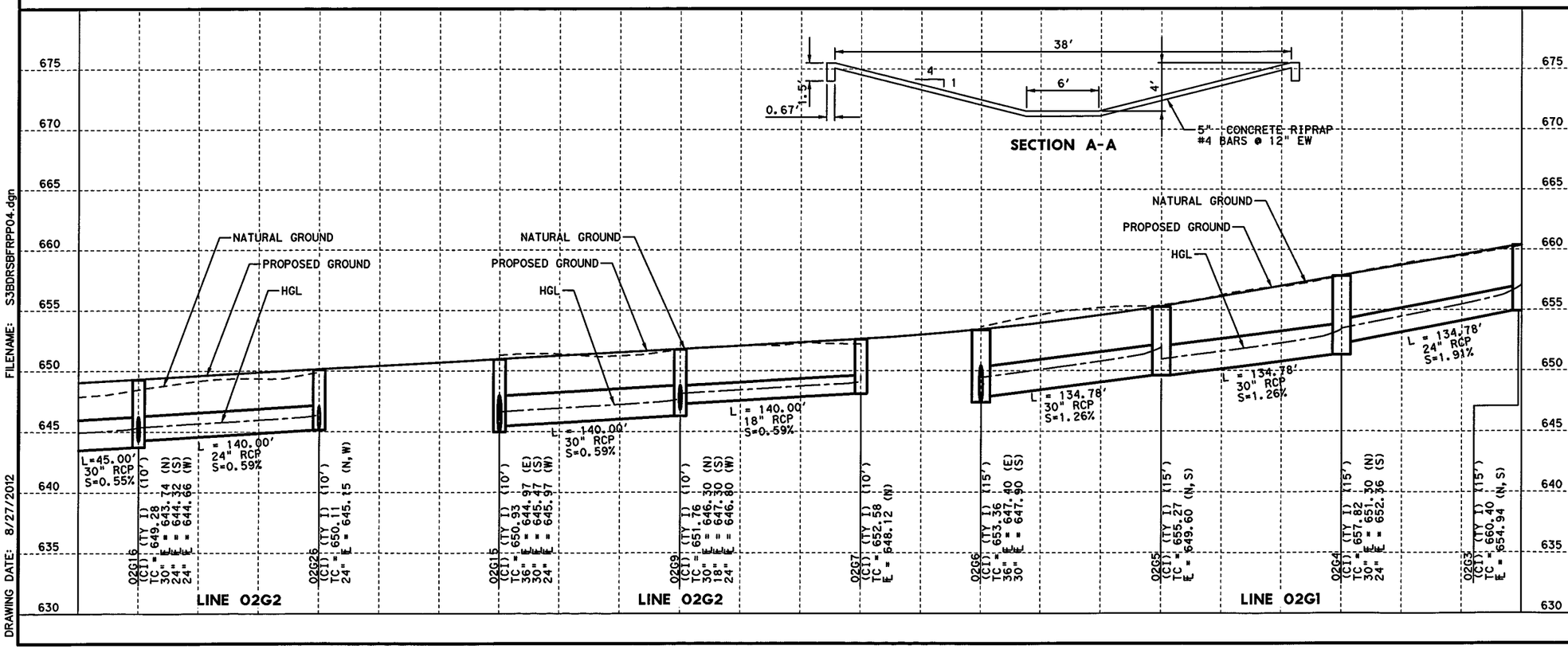

STATE OF TEXAS
SHAFEE YUSUF
94963
LICENSED
PROFESSIONAL ENGINEER
8/29/12

I. S. ENGINEERS, LLC
TBPE REG. # F-11657

Texas Department of Transportation
© 2012

IH 35W FROM NORTH TARRANT PKWY TO IH 820

DRAINAGE PLAN & PROFILE
SBFR
STA 63+50 TO STA 75+50

SCALE: 1" = 100' H, 1" = 10' V — SHEET 4 OF 9

DESIGN	FED.RD. DIV.NO.	FEDERAL AID PROJECT NO.		HIGHWAY NO.
BV	6	(SEE TITLE SHEET)		IH 35W
GRAPHICS	STATE	DISTRICT	COUNTY	SHEET NO.
ZS	TEXAS	FTW	TARRANT	1260
CHECK	CONTROL	SECTION	JOB	
SY / MNM	0014	16	255, ETC.	

FILENAME: S3BDRSBFRPP04.dgn
DRAWING DATE: 8/27/2012

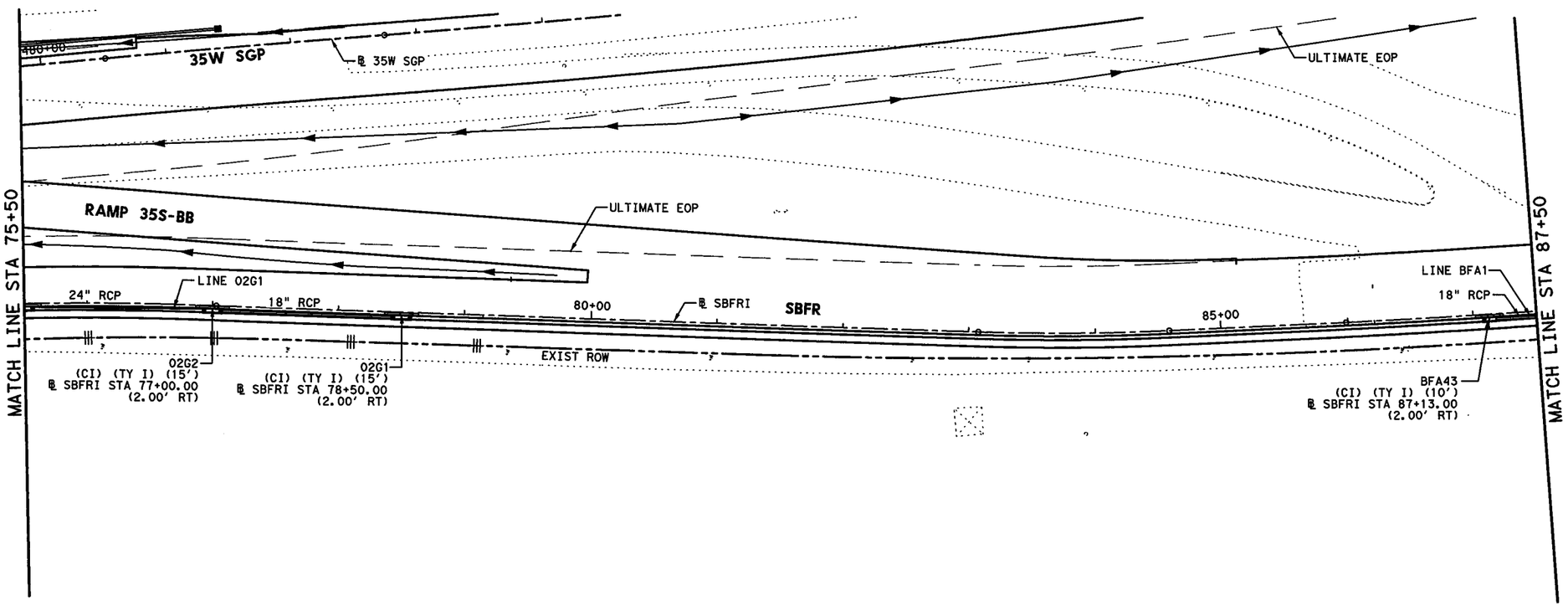

HORZ 0' 25' 50' 100'

SCALE IN FEET

GENERAL NOTES

1. ALL LOCATIONS FOR CURB INLETS ARE SHOWN TO THE FACE OF CURB.
2. ALL LOCATIONS FOR DITCH INLETS, GRATE INLETS, AND MANHOLES ARE SHOWN TO CENTER POINT (CP) OF INLET BOX OR MANHOLE BOX.
3. REFERENCE ROADWAY PLAN AND PROFILE SHEETS FOR ADDITIONAL INFORMATION.
4. REFERENCE CULVERT PLAN AND PROFILE SHEETS FOR ADDITIONAL INFORMATION.
5. REFERENCE DRIVEWAY DETAIL SHEETS FOR ADDITIONAL INFORMATION.
6. (GI) = GRATE INLET (DI) = DROP INLET
   (CI) = CURB INLET (MH) = MANHOLE
   (TR) = TOP OF RIM (TG) = TOP OF GRATE
   (TC) = TOP OF CURB
   (W/DB) = WITH DITCH BLOCK
7. GEOPAK DRAINAGE WAS USED FOR THE STORM SEWER DESIGN COMPUTATIONS.
8. HGL REFLECTS 10 YR DESIGN STORM.
9. REFER TO CROSS-SECTIONS FOR DITCH INFORMATION.

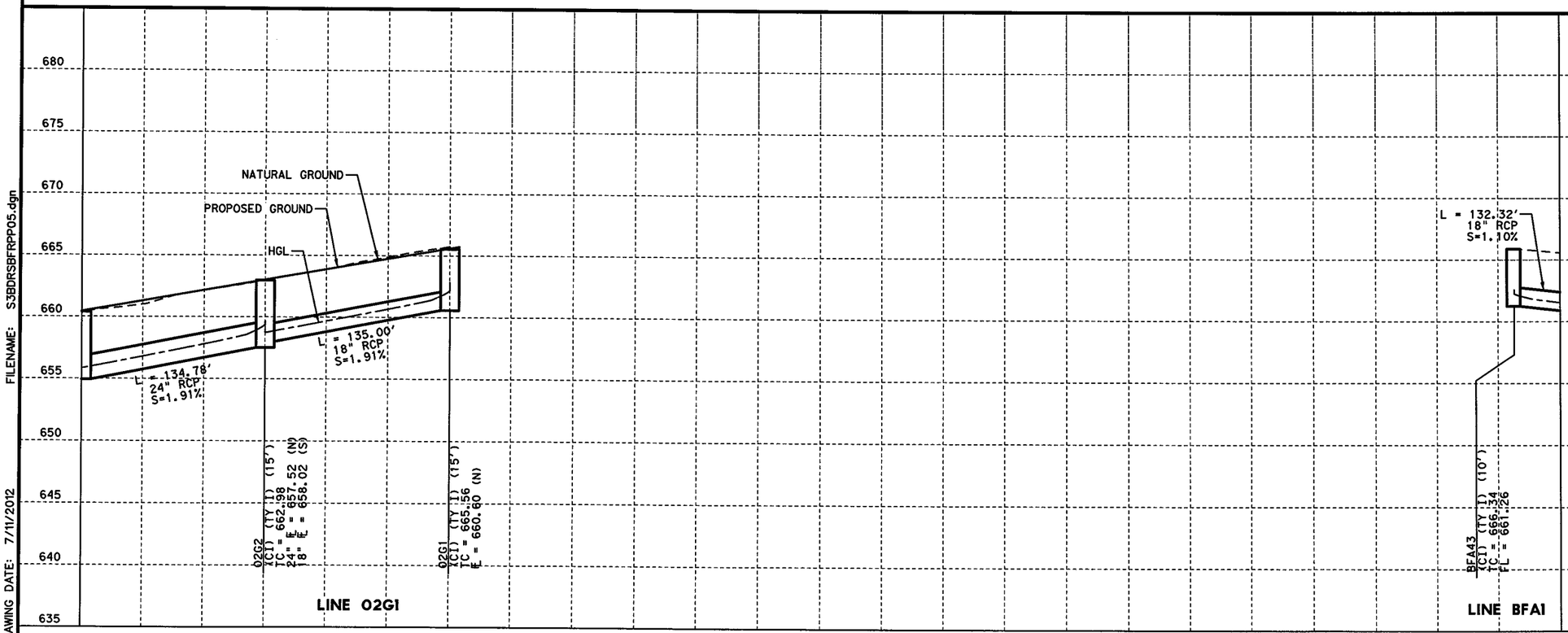

STATE OF TEXAS
SHAFEE YUSUF
94963
LICENSED
PROFESSIONAL ENGINEER
7/11/12

I. S. ENGINEERS, LLC
TBPE REG. # F-11657

Texas Department of Transportation
© 2012

IH 35W FROM NORTH TARRANT PKWY TO IH 820

DRAINAGE PLAN & PROFILE

SBFR

STA 75+50 TO STA 87+50

SCALE: 1" = 100' H, 1" = 10' V

SHEET 5 OF 9

DESIGN	FED.RD. DIV.NO.	FEDERAL AID PROJECT NO.		HIGHWAY NO.
BV	6	(SEE TITLE SHEET)		IH 35W
GRAPHICS	STATE	DISTRICT	COUNTY	SHEET NO.
ZS	TEXAS	FTW	TARRANT	1261
CHECK	CONTROL	SECTION	JOB	
SY / MNM	0014	16	255, ETC.	

FILENAME: S3BDRSBFRPP05.dgn

DRAWING DATE: 7/11/2012

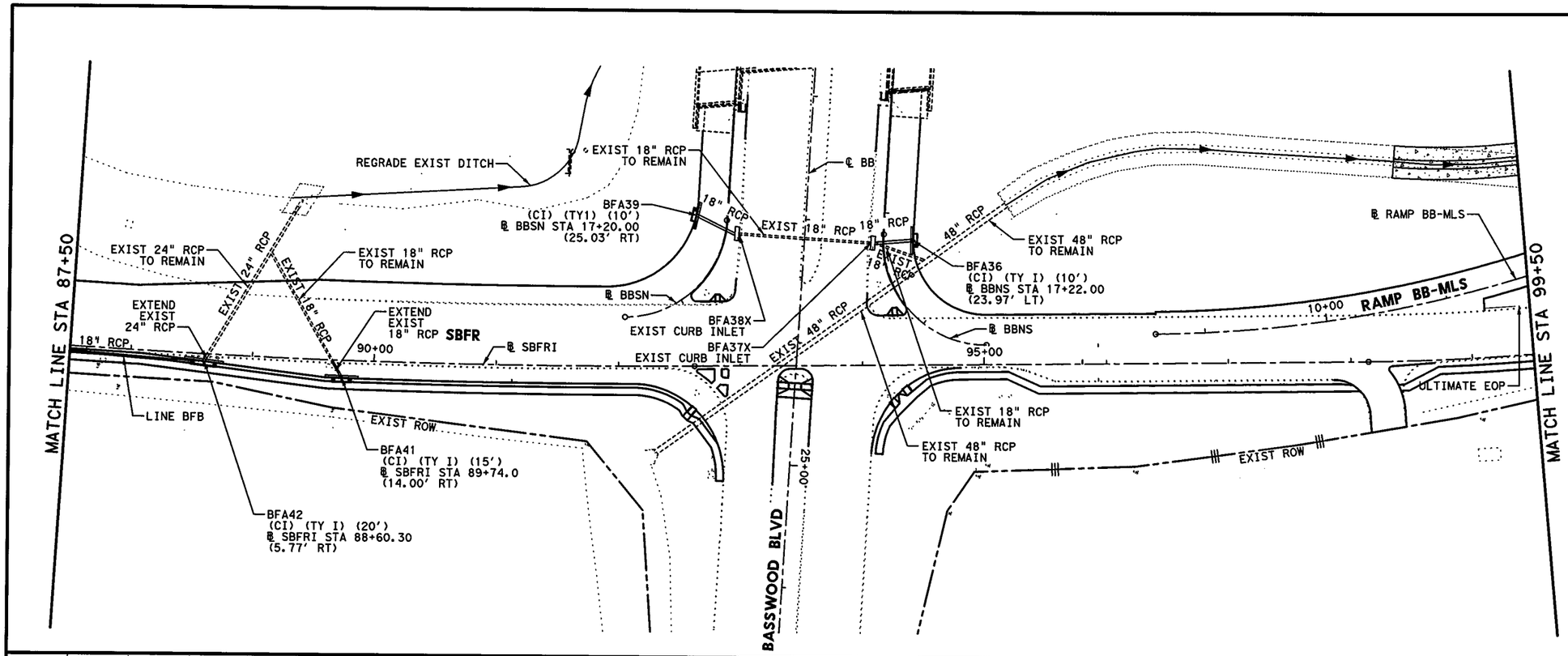

HORZ 0' 25' 50' 100'

SCALE IN FEET

GENERAL NOTES

1. ALL LOCATIONS FOR CURB INLETS ARE SHOWN TO THE FACE OF CURB.
2. ALL LOCATIONS FOR DITCH INLETS, GRATE INLETS, AND MANHOLES ARE SHOWN TO CENTER POINT (CP) OF INLET BOX OR MANHOLE BOX.
3. REFERENCE ROADWAY PLAN AND PROFILE SHEETS FOR ADDITIONAL INFORMATION.
4. REFERENCE CULVERT PLAN AND PROFILE SHEETS FOR ADDITIONAL INFORMATION.
5. REFERENCE DRIVEWAY DETAIL SHEETS FOR ADDITIONAL INFORMATION.
6. (GI) = GRATE INLET (DI) = DROP INLET
   (CI) = CURB INLET (MH) = MANHOLE
   (TR) = TOP OF RIM (TG) = TOP OF GRATE
   (TC) = TOP OF CURB
   (W/DB) = WITH DITCH BLOCK
7. GEOPAK DRAINAGE WAS USED FOR THE STORM SEWER DESIGN COMPUTATIONS.
8. HGL REFLECTS 10 YR DESIGN STORM.
9. REFER TO CROSS-SECTIONS FOR DITCH INFORMATION.

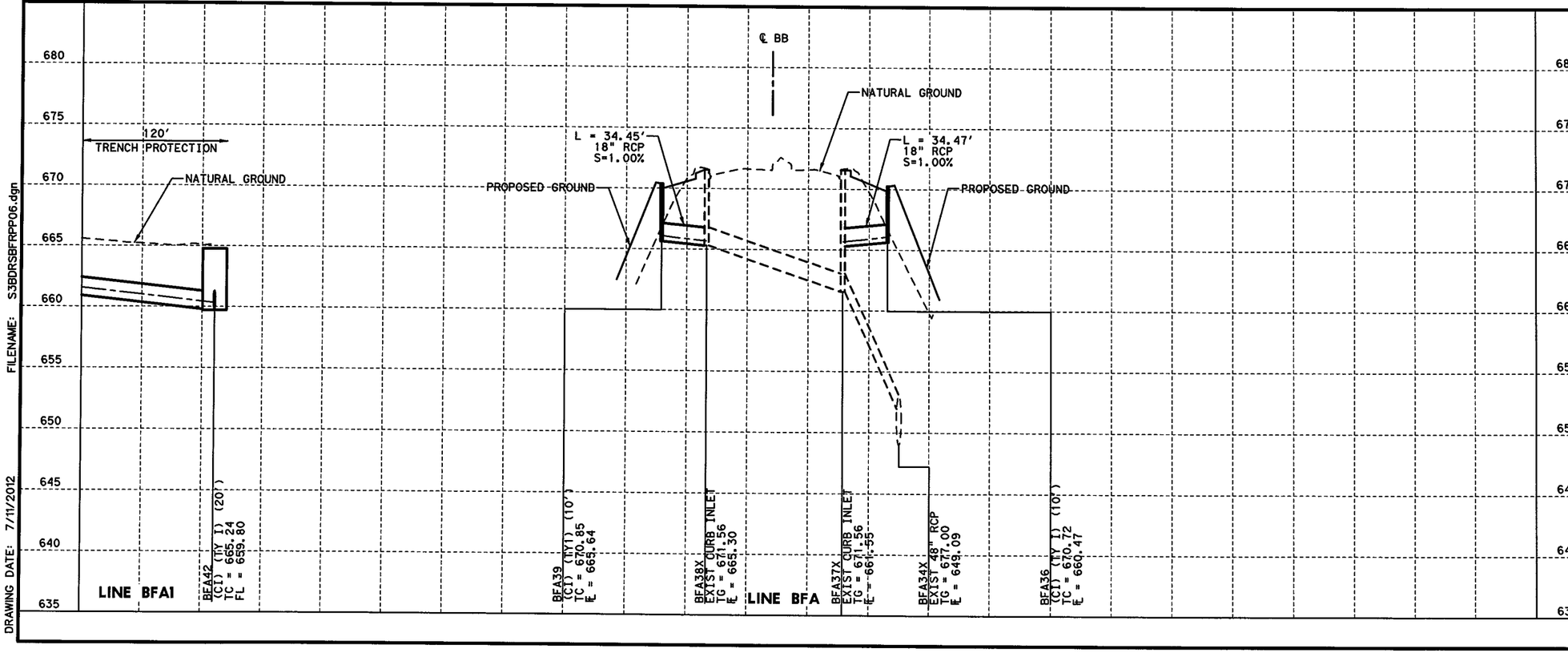

FILENAME: S3BDRSBFRPP06.dgn

DRAWING DATE: 7/11/2012

STATE OF TEXAS
B. VANDERWALT
81580
LICENSED
PROFESSIONAL ENGINEER

B. Vanderwalt P.E.
7/11/2012

I. S. ENGINEERS, LLC

TBPE REG. # F-11657

Texas Department of Transportation

© 2012

IH 35W FROM NORTH TARRANT PKWY TO IH 820

DRAINAGE PLAN & PROFILE

SBFR

STA 87+50 TO STA 99+50

SCALE: 1" = 100' H, 1" = 10' V

SHEET 6 OF 9

DESIGN	FED.RD. DIV.NO.	FEDERAL AID PROJECT NO.		HIGHWAY NO.
BV	6	(SEE TITLE SHEET)		IH 35W
GRAPHICS ZS	STATE	DISTRICT	COUNTY	SHEET NO.
CHECK SY	TEXAS	FTW	TARRANT	1262
CHECK MNM	CONTROL	SECTION	JOB	
	0014	16	255, ETC.	

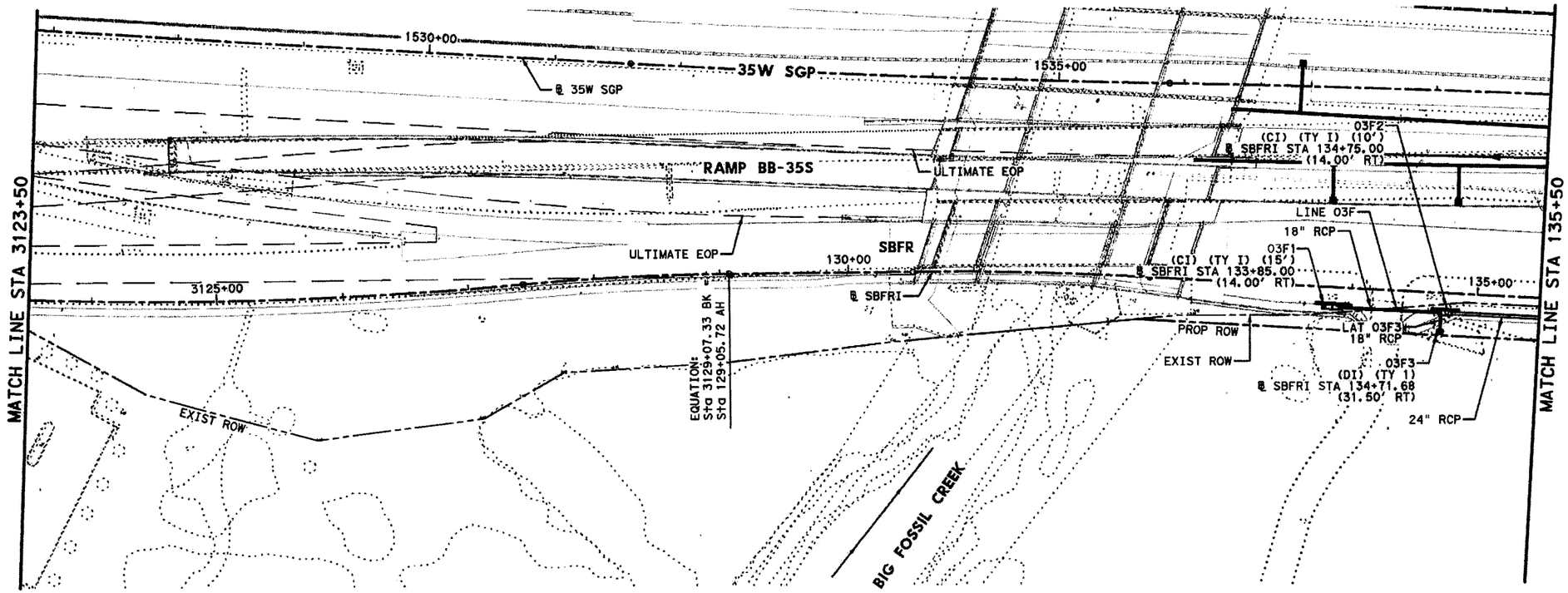

HORZ 0' 25' 50' 100'
VERT 0' 5' 10'
SCALE IN FEET

GENERAL NOTES

1. ALL LOCATIONS FOR CURB INLETS ARE SHOWN TO THE FACE OF CURB.
2. ALL LOCATIONS FOR DITCH INLETS, GRATE INLETS, AND MANHOLES ARE SHOWN TO CENTER POINT (CP) OF INLET BOX OR MANHOLE BOX.
3. REFERENCE ROADWAY PLAN AND PROFILE SHEETS FOR ADDITIONAL INFORMATION.
4. REFERENCE CULVERT PLAN AND PROFILE SHEETS FOR ADDITIONAL INFORMATION.
5. REFERENCE DRIVEWAY DETAIL SHEETS FOR ADDITIONAL INFORMATION.
6. (GI) = GRATE INLET (DI) = DROP INLET
   (CI) = CURB INLET (MH) = MANHOLE
   (TR) = TOP OF RIM (TG) = TOP OF GRATE
   (TC) = TOP OF CURB
   (W/DB) = WITH DITCH BLOCK
7. GEOPAK DRAINAGE WAS USED FOR THE STORM SEWER DESIGN COMPUTATIONS.
8. HGL REFLECTS 10 YR DESIGN STORM.
9. REFER TO CROSS-SECTIONS FOR DITCH INFORMATION.

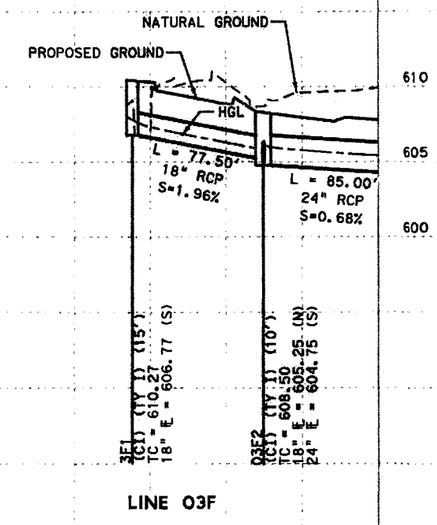

LINE 03F

STATE OF TEXAS
RYAN S. HAGUE
100698
LICENSED
PROFESSIONAL ENGINEER
7/9/12

CP&Y, INC.
TBPE REGISTRATION NO. F-1741

Texas Department of Transportation
© 2012

IH 35W FROM NORTH TARRANT PKWY TO IH 820

DRAINAGE PLAN & PROFILE

SBFR

STA 3123+50 TO STA 135+50

SCALE: 1" = 100' H, 1" = 10' V — SHEET 7 OF 9

DESIGN	FED. RD. DIV. NO.	FEDERAL AID PROJECT NO.		HIGHWAY NO.
CPY	6	(SEE TITLE SHEET)		IH 35W
GRAPHICS	STATE	DISTRICT	COUNTY	SHEET NO.
CPY	TEXAS	FTW	TARRANT	
CHECK	CONTROL	SECTION	JOB	1263
CPY	0014	16	255, ETC.	
CHECK				
CPY				

FILENAME: S38SBDPP09.dgn

DRAWING DATE: 7/13/2012

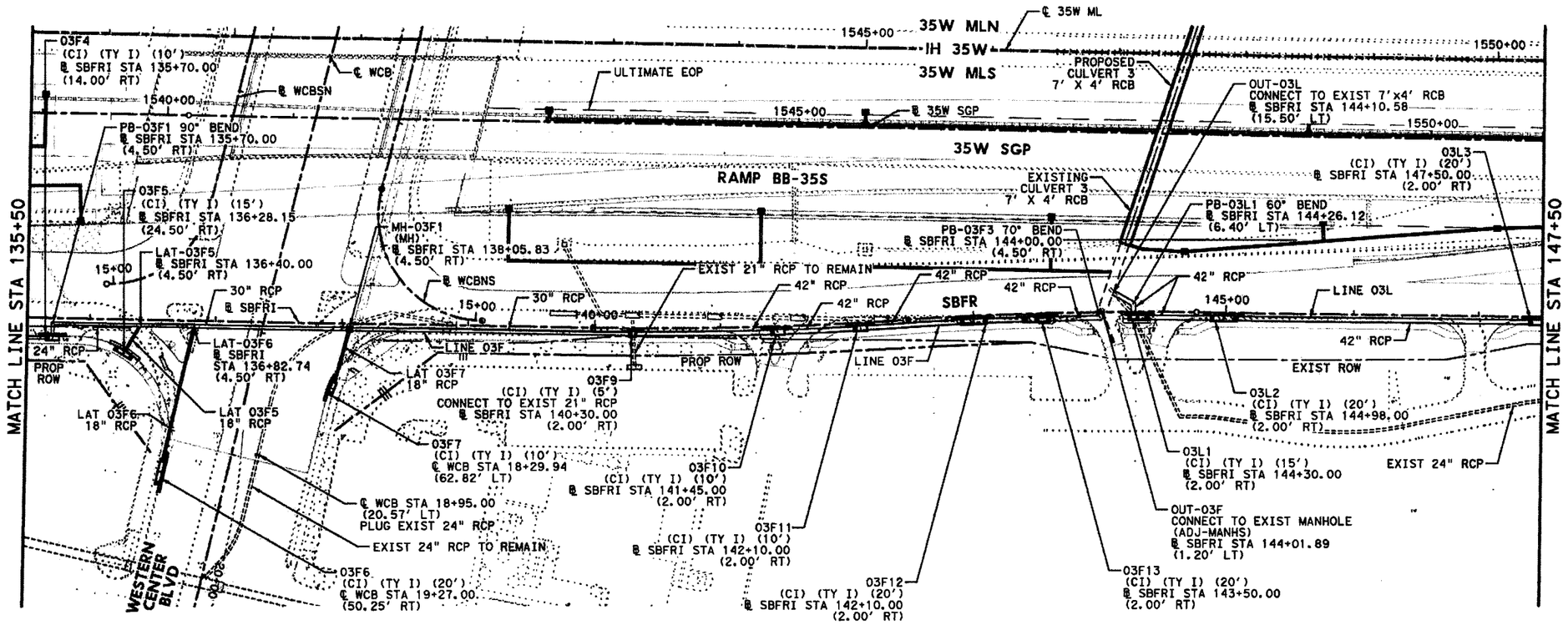

HORZ 0' 25' 50' 100'
VERT 0' 5' 10'
SCALE IN FEET

GENERAL NOTES

1. ALL LOCATIONS FOR CURB INLETS ARE SHOWN TO THE FACE OF CURB.
2. ALL LOCATIONS FOR DITCH INLETS, GRATE INLETS, AND MANHOLES ARE SHOWN TO CENTER POINT (CP) OF INLET BOX OR MANHOLE BOX.
3. REFERENCE ROADWAY PLAN AND PROFILE SHEETS FOR ADDITIONAL INFORMATION.
4. REFERENCE CULVERT PLAN AND PROFILE SHEETS FOR ADDITIONAL INFORMATION.
5. REFERENCE DRIVEWAY DETAIL SHEETS FOR ADDITIONAL INFORMATION.
6. (GI) = GRATE INLET (DI) = DROP INLET
   (CI) = CURB INLET (MH) = MANHOLE
   (TR) = TOP OF RIM (TG) = TOP OF GRATE
   (TC) = TOP OF CURB
   (W/DB) = WITH DITCH BLOCK
7. GEOPAK DRAINAGE WAS USED FOR THE STORM SEWER DESIGN COMPUTATIONS.
8. HGL REFLECTS 10 YR DESIGN STORM.
9. REFER TO CROSS-SECTIONS FOR DITCH INFORMATION.

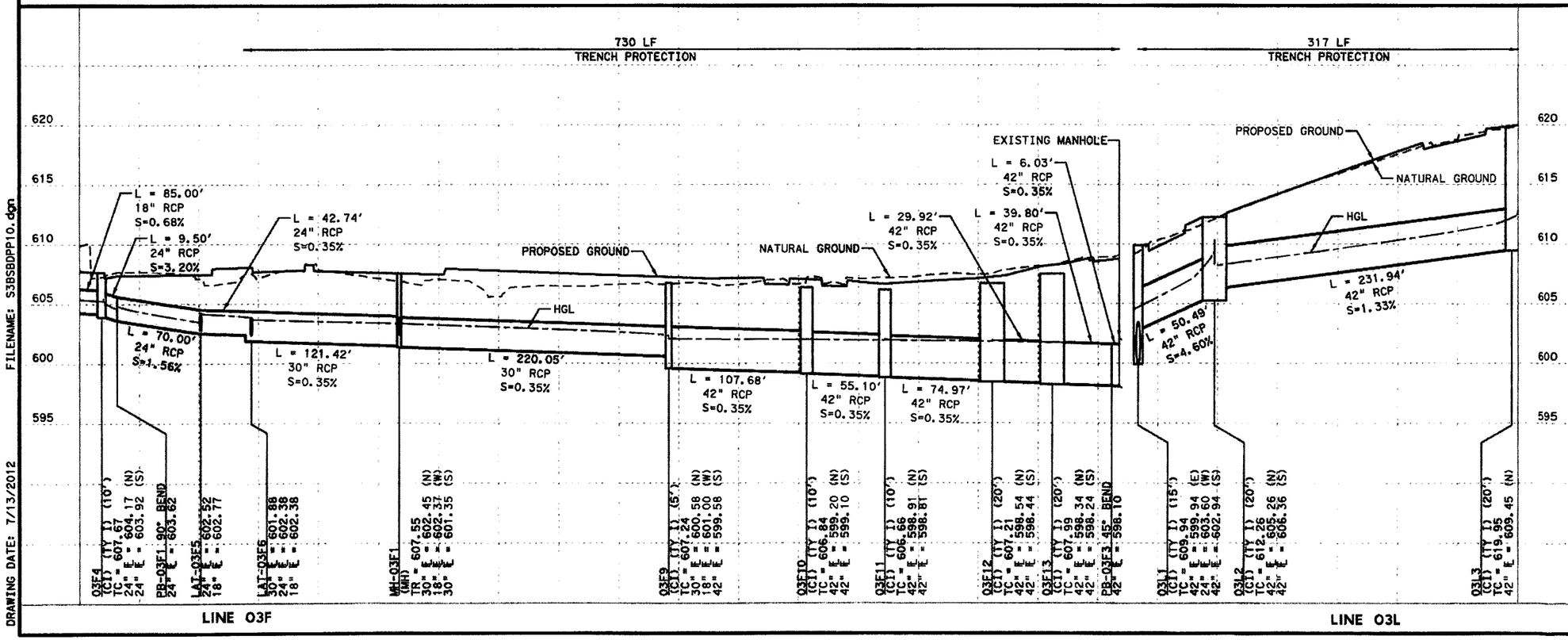

FILENAME: S3BSBDPP10.dgn

DRAWING DATE: 7/13/2012

STATE OF TEXAS
RYAN S. HAGUE
100898
LICENSED
PROFESSIONAL ENGINEER
7/9/12

CP&Y, INC.
TBPE REGISTRATION NO. F-1741

Texas Department of Transportation
© 2012

IH 35W FROM NORTH TARRANT PKWY TO IH 820

DRAINAGE PLAN & PROFILE
SBFR
STA 135+50 TO STA 147+50

SCALE: 1" = 100' H, 1" = 10' V

SHEET 8 OF 9

DESIGN	FED. RD. DIV. NO.	FEDERAL AID PROJECT NO.		HIGHWAY NO.
CPY	6	(SEE TITLE SHEET)		IH 35W
GRAPHICS CPY	STATE	DISTRICT	COUNTY	SHEET NO.
CHECK CPY	TEXAS	FTW	TARRANT	1264
CHECK CPY	CONTROL	SECTION	JOB	
	0014	16	255, ETC.	

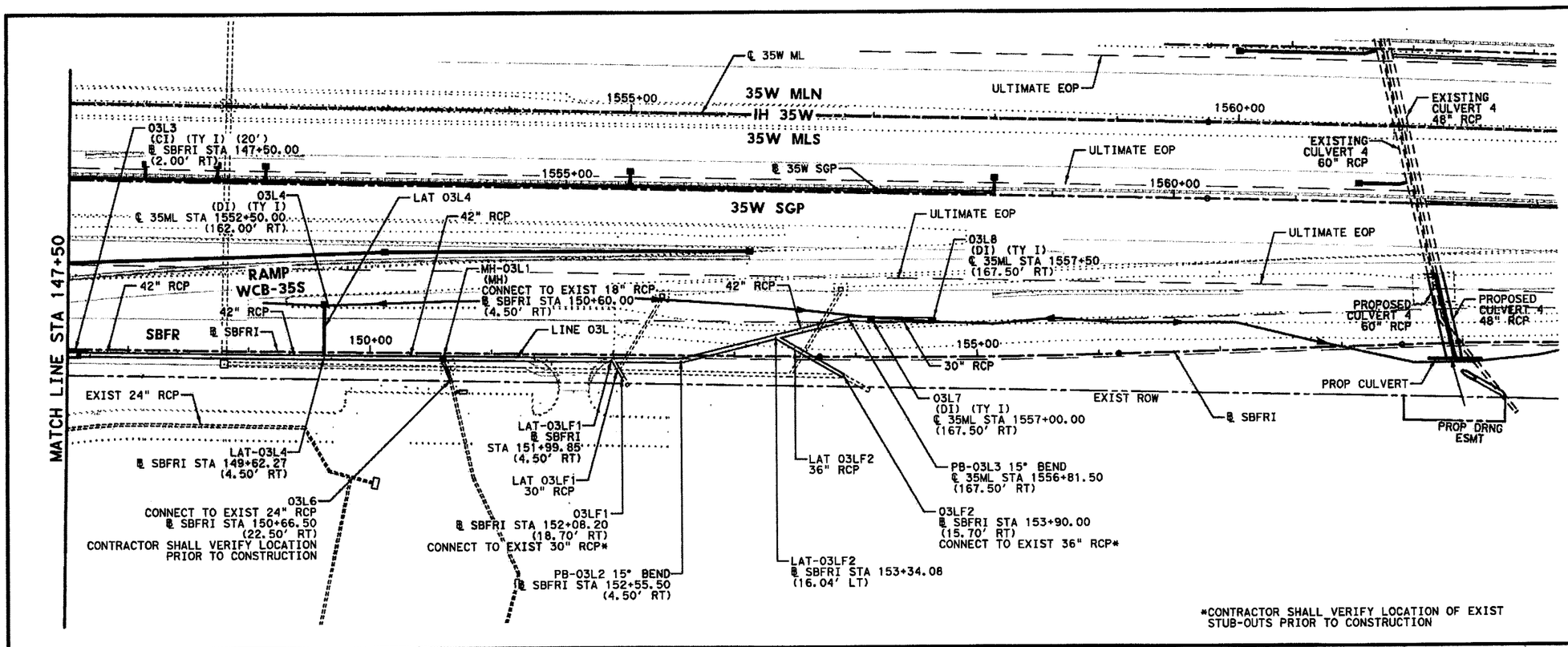

HORZ 0' 25' 50' 100'
VERT 0' 5' 10'
SCALE IN FEET

GENERAL NOTES

1. ALL LOCATIONS FOR CURB INLETS ARE SHOWN TO THE FACE OF CURB.
2. ALL LOCATIONS FOR DITCH INLETS, GRATE INLETS, AND MANHOLES ARE SHOWN TO CENTER POINT (CP) OF INLET BOX OR MANHOLE BOX.
3. REFERENCE ROADWAY PLAN AND PROFILE SHEETS FOR ADDITIONAL INFORMATION.
4. REFERENCE CULVERT PLAN AND PROFILE SHEETS FOR ADDITIONAL INFORMATION.
5. REFERENCE DRIVEWAY DETAIL SHEETS FOR ADDITIONAL INFORMATION.
6. (GI) = GRATE INLET (DI) = DROP INLET
   (CI) = CURB INLET (MH) = MANHOLE
   (TR) = TOP OF RIM (TG) = TOP OF GRATE
   (TC) = TOP OF CURB
   (W/DB) = WITH DITCH BLOCK
7. GEOPAK DRAINAGE WAS USED FOR THE STORM SEWER DESIGN COMPUTATIONS.
8. HGL REFLECTS 10 YR DESIGN STORM.
9. REFER TO CROSS-SECTIONS FOR DITCH INFORMATION.

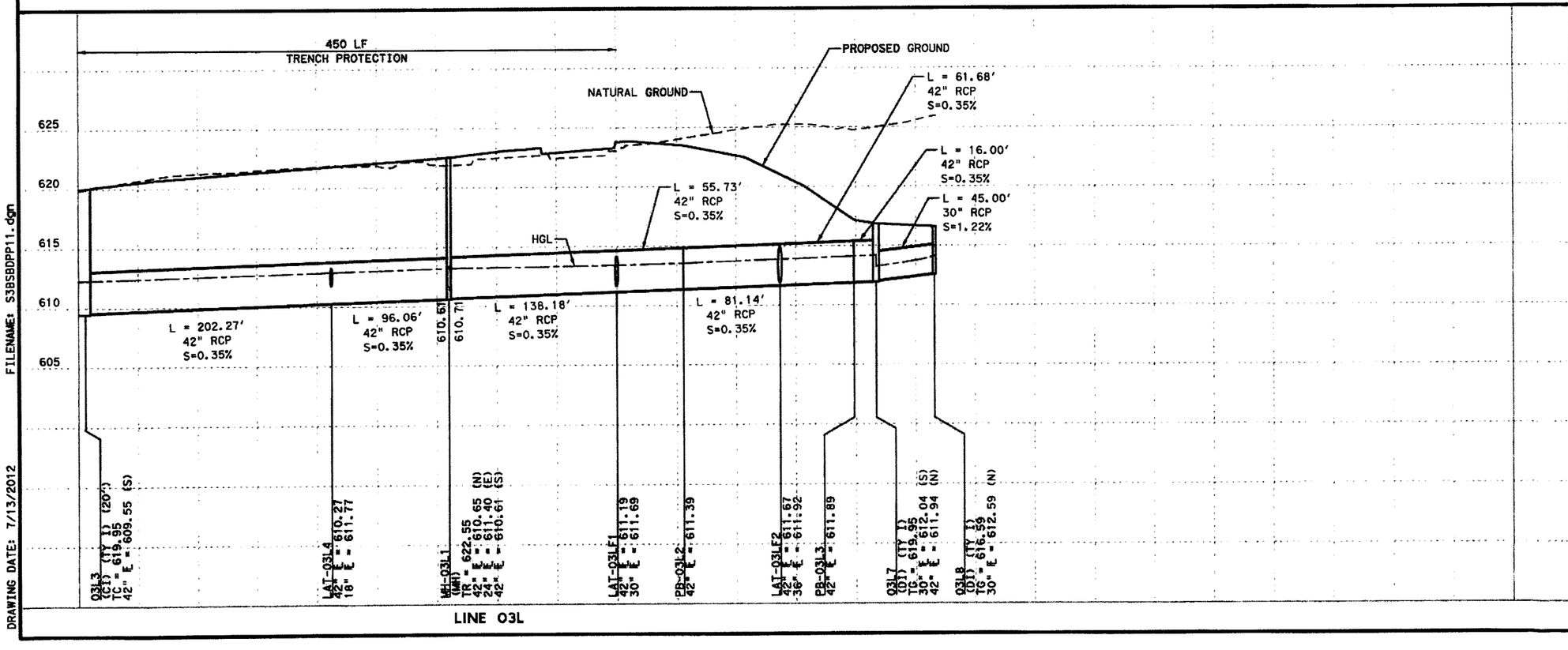

STATE OF TEXAS
RYAN S. HAGUE
100898
LICENSED
PROFESSIONAL ENGINEER
7/9/12

CP&Y, INC.
TBPE REGISTRATION NO. F-1741

Texas Department of Transportation
© 2012

IH 35W FROM NORTH TARRANT PKWY TO IH 820

DRAINAGE PLAN & PROFILE
SBFR
STA 147+50 TO END PROJECT

SCALE: 1" = 100' H, 1" = 10' V — SHEET 9 OF 9

DESIGN	FED. RD. DIV. NO.	FEDERAL AID PROJECT NO.		HIGHWAY NO.
CPY	6	(SEE TITLE SHEET)		IH 35W
GRAPHICS CPY	STATE	DISTRICT	COUNTY	SHEET NO.
CHECK CPY	TEXAS	FTW	TARRANT	1265
CHECK CPY	CONTROL	SECTION	JOB	
	0014	16	255, ETC.	

FILENAME: S3BSBDPP11.dgn
DRAWING DATE: 7/13/2012

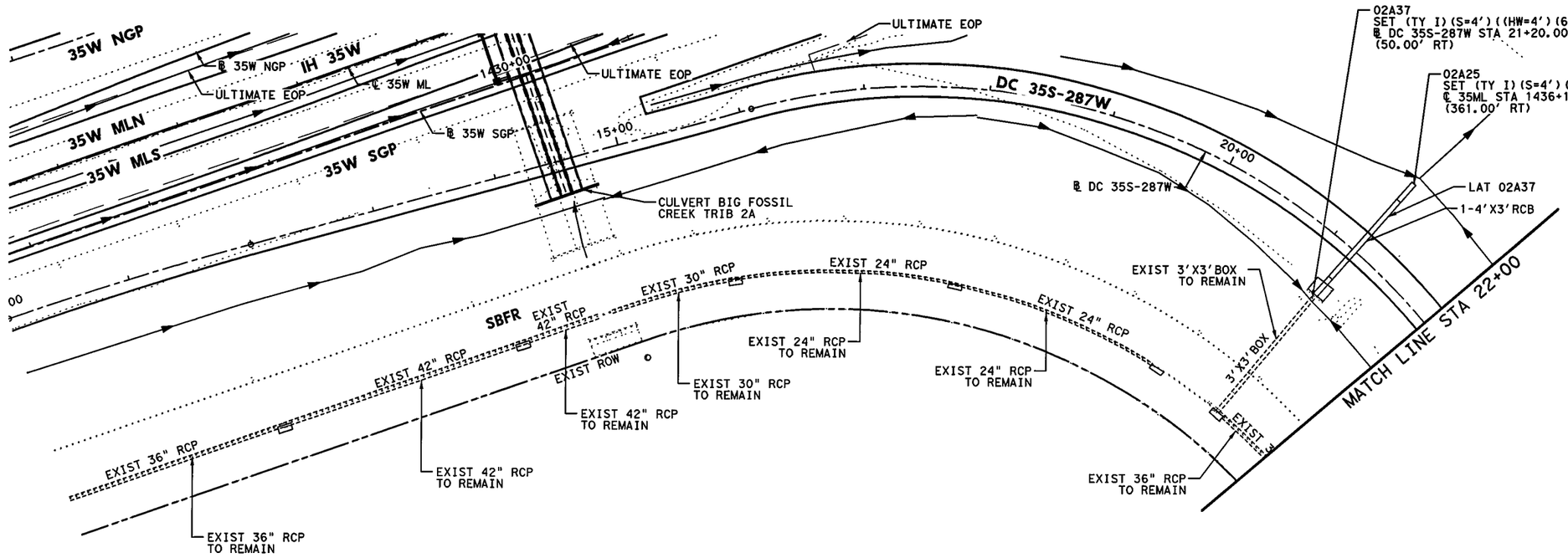

GENERAL NOTES

1. ALL LOCATIONS FOR CURB INLETS ARE SHOWN TO THE FACE OF CURB.
2. ALL LOCATIONS FOR DITCH INLETS, GRATE INLETS, AND MANHOLES ARE SHOWN TO CENTER POINT (CP) OF INLET BOX OR MANHOLE BOX.
3. REFERENCE ROADWAY PLAN AND PROFILE SHEETS FOR ADDITIONAL INFORMATION.
4. REFERENCE CULVERT PLAN AND PROFILE SHEETS FOR ADDITIONAL INFORMATION.
5. REFERENCE DRIVEWAY ℄ DETAIL SHEETS FOR ADDITIONAL INFORMATION.
6. (GI) = GRATE INLET (DI) = DROP INLET
   (CI) = CURB INLET (MH) = MANHOLE
   (TR) = TOP OF RIM (TG) = TOP OF GRATE
   (TC) = TOP OF CURB
   (W/DB) = WITH DITCH BLOCK
7. GEOPAK DRAINAGE WAS USED FOR THE STORM SEWER DESIGN COMPUTATIONS.
8. HGL REFLECTS 10 YR DESIGN STORM.
9. REFER TO CROSS-SECTIONS FOR DITCH INFORMATION.

680 675 670 665 660 655 650 645 640 635

STATE OF TEXAS
SHAFEE YUSUF
94963
LICENSED
PROFESSIONAL ENGINEER
8/29/12

I. S. ENGINEERS, LLC
TBPE REG. # F-11657

Texas Department of Transportation
© 2012

IH 35W FROM NORTH TARRANT PKWY TO IH 820

DRAINAGE PLAN & PROFILE
35S-287W DIRECT CONNECTOR
BEGIN TO STA 22+00

SCALE: 1" = 100' H, 1" = 10' V — SHEET 1 OF 2

DESIGN	FED.RD. DIV.NO.	FEDERAL AID PROJECT NO.		HIGHWAY NO.
BV	6	(SEE TITLE SHEET)		IH 35W
GRAPHICS	STATE	DISTRICT	COUNTY	SHEET NO.
ZS	TEXAS	FTW	TARRANT	1266
CHECK	CONTROL	SECTION	JOB	
SY	0014	16	255, ETC.	
CHECK				
MNM				

FILENAME: S3BDRDCPP06.dgn
DRAWING DATE: 8/27/2012

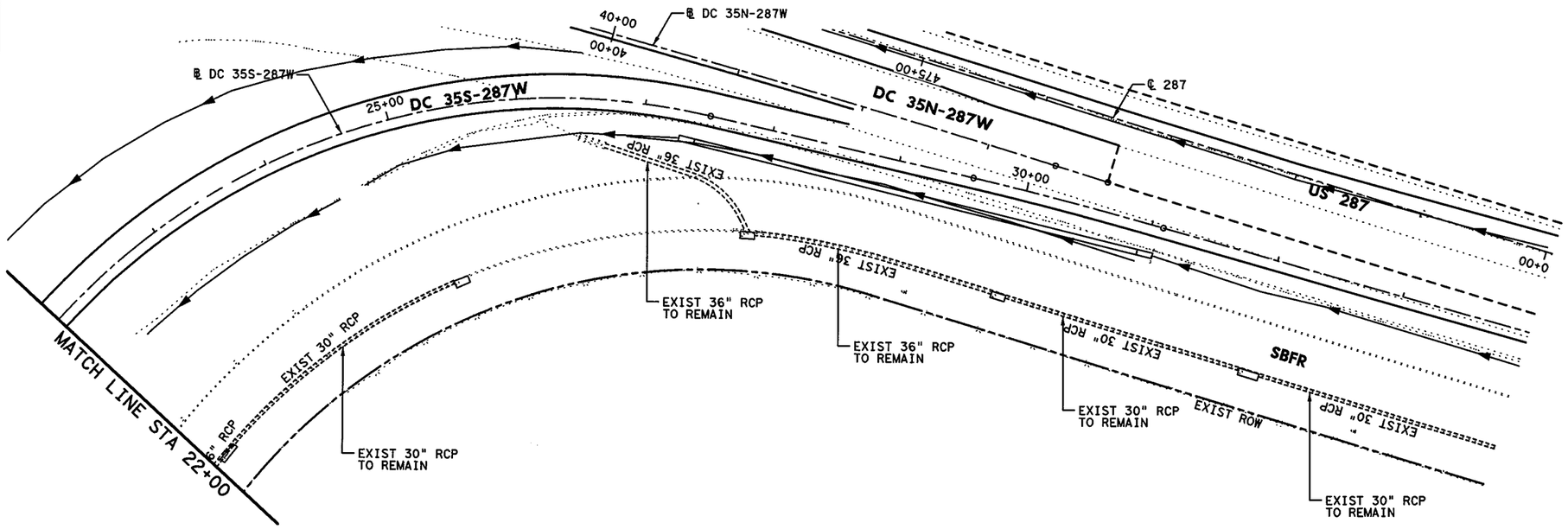

HORZ 0' 25' 50' 100'

VERT 0' 5' 10'

SCALE IN FEET

GENERAL NOTES

1. ALL LOCATIONS FOR CURB INLETS ARE SHOWN TO THE FACE OF CURB.
2. ALL LOCATIONS FOR DITCH INLETS, GRATE INLETS, AND MANHOLES ARE SHOWN TO CENTER POINT (CP) OF INLET BOX OR MANHOLE BOX.
3. REFERENCE ROADWAY PLAN AND PROFILE SHEETS FOR ADDITIONAL INFORMATION.
4. REFERENCE CULVERT PLAN AND PROFILE SHEETS FOR ADDITIONAL INFORMATION.
5. REFERENCE DRIVEWAY DETAIL SHEETS FOR ADDITIONAL INFORMATION.
6. (GI) = GRATE INLET (DI) = DROP INLET
   (CI) = CURB INLET (MH) = MANHOLE
   (TR) = TOP OF RIM (TG) = TOP OF GRATE
   (TC) = TOP OF CURB
   (W/DB) = WITH DITCH BLOCK
7. GEOPAK DRAINAGE WAS USED FOR THE STORM SEWER DESIGN COMPUTATIONS.
8. HGL REFLECTS 10 YR DESIGN STORM.
9. REFER TO CROSS-SECTIONS FOR DITCH INFORMATION.

685 680 675 670 665 660 655 650 645 640

STATE OF TEXAS
SHAFEE YUSUF
94963
LICENSED
PROFESSIONAL ENGINEER
7/11/12

I. S. ENGINEERS, LLC
TBPE REG. # F-11657

Texas Department of Transportation
© 2012

IH 35W FROM NORTH TARRANT PKWY TO IH 820

DRAINAGE PLAN & PROFILE

35S-287W DIRECT CONNECTOR

STA 22+00 TO END

SCALE: 1" = 100' H, 1" = 10' V

SHEET 2 OF 2

DESIGN	FED.RD. DIV.NO.	FEDERAL AID PROJECT NO.		HIGHWAY NO.
BV	6			IH 35W
GRAPHICS	STATE	DISTRICT	COUNTY	SHEET NO.
ZS	TEXAS	FTW	TARRANT	1267
CHECK	CONTROL	SECTION	JOB	
SY	0014	16	255, ETC.	
CHECK				
MNM				

FILENAME: S3BDRDCPP07.dgn

DRAWING DATE: 7/11/2012

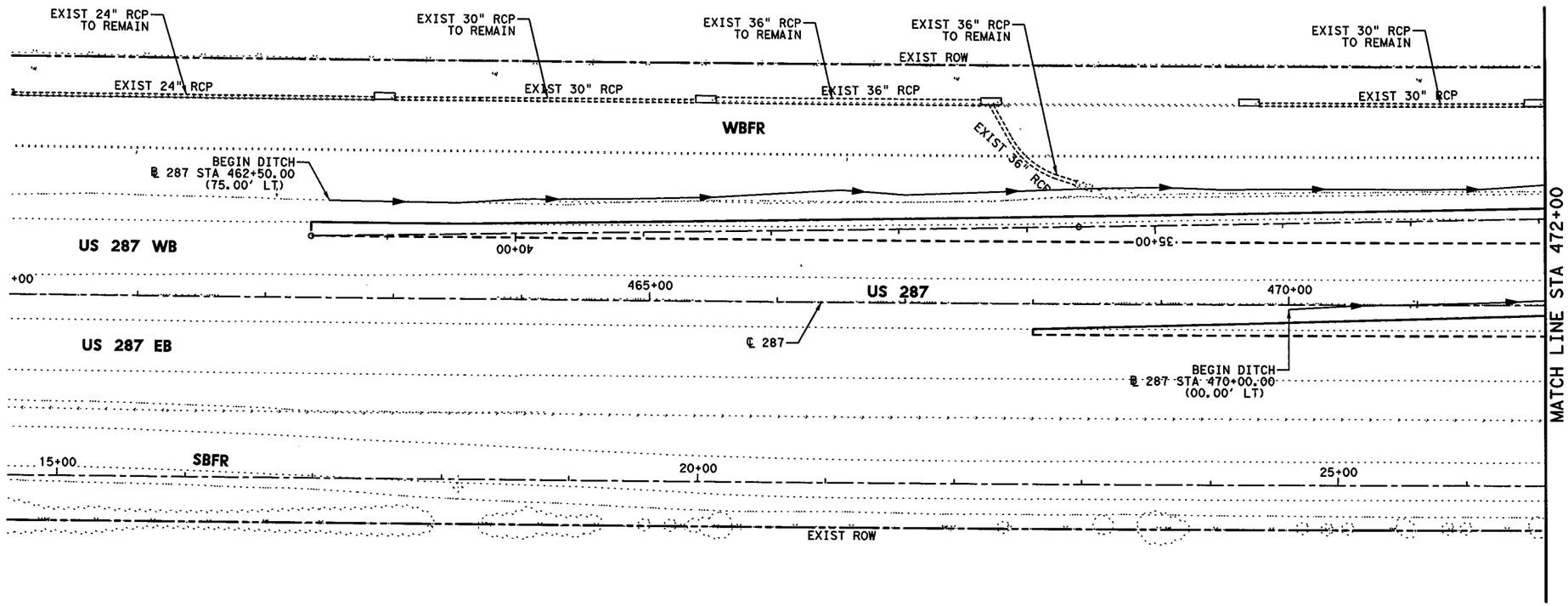

HORZ 0' 25' 50' 100'

SCALE IN FEET

GENERAL NOTES

1. ALL LOCATIONS FOR CURB INLETS ARE SHOWN TO THE FACE OF CURB.
2. ALL LOCATIONS FOR DITCH INLETS, GRATE INLETS, AND MANHOLES ARE SHOWN TO CENTER POINT (CP) OF INLET BOX OR MANHOLE BOX.
3. REFERENCE ROADWAY PLAN AND PROFILE SHEETS FOR ADDITIONAL INFORMATION.
4. REFERENCE CULVERT PLAN AND PROFILE SHEETS FOR ADDITIONAL INFORMATION.
5. REFERENCE DRIVEWAY DETAIL SHEETS FOR ADDITIONAL INFORMATION.
6. (GI) = GRATE INLET (DI) = DROP INLET
   (CI) = CURB INLET (MH) = MANHOLE
   (TR) = TOP OF RIM (TG) = TOP OF GRATE
   (TC) = TOP OF CURB
   (W/DB) = WITH DITCH BLOCK
7. GEOPAK DRAINAGE WAS USED FOR THE STORM SEWER DESIGN COMPUTATIONS.
8. HGL REFLECTS 10 YR DESIGN STORM.
9. REFER TO CROSS-SECTIONS FOR DITCH INFORMATION.

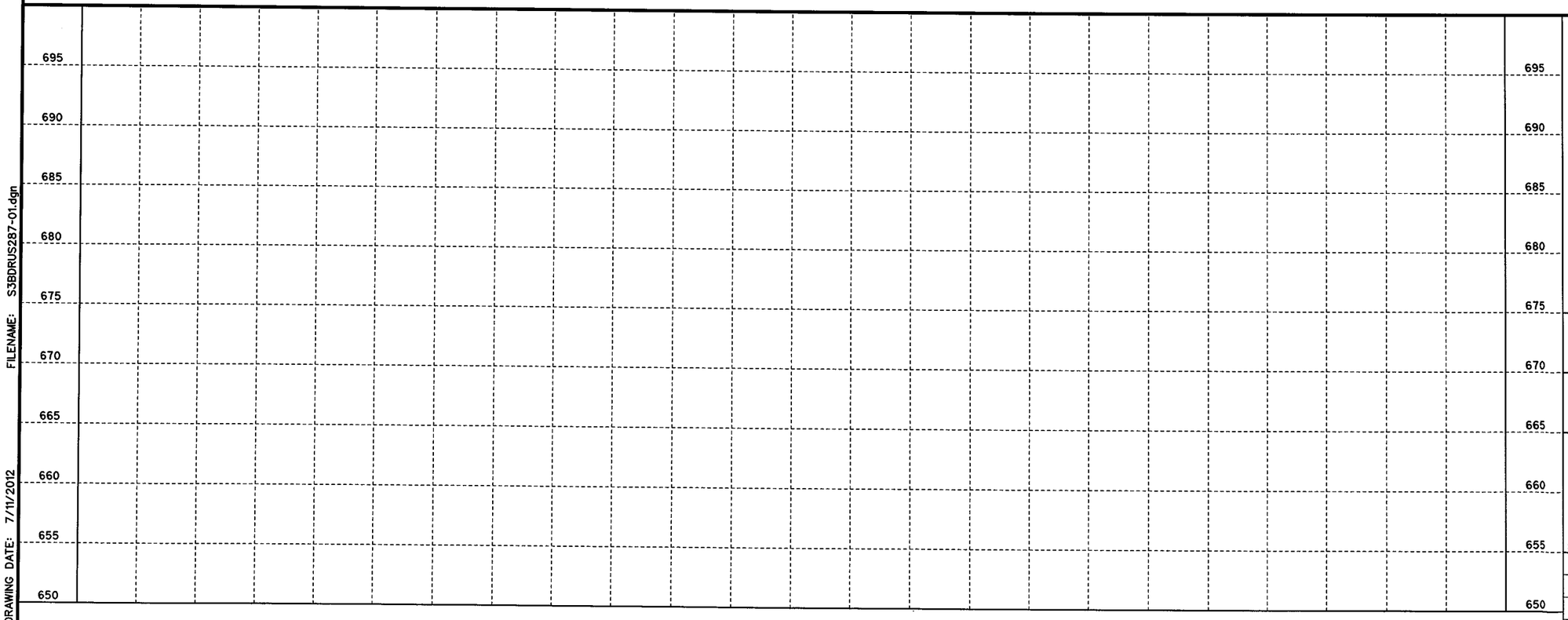

STATE OF TEXAS
SHAFEE YUSUF
94963
LICENSED
PROFESSIONAL ENGINEER

7/11/12

I. S. ENGINEERS, LLC
TBPE REG. # F-11657

Texas Department of Transportation
© 2012

IH 35W FROM NORTH TARRANT PKWY TO IH 820

DRAINAGE PLAN & PROFILE

US 287

BEGIN TO STA 472+00

SCALE: 1" = 100' H, 1" = 10' V

SHEET 1 OF 2

DESIGN	FED.RD. DIV.NO.	FEDERAL AID PROJECT NO.		HIGHWAY NO.
BV	6	(SEE TITLE SHEET)		IH 35W
GRAPHICS ZS	STATE	DISTRICT	COUNTY	SHEET NO.
CHECK SY	TEXAS	FTW	TARRANT	1268
CHECK MNM	CONTROL 0014	SECTION 16	JOB 255, ETC.	

FILENAME: S3BDRUS287-01.dgn

DRAWING DATE: 7/11/2012

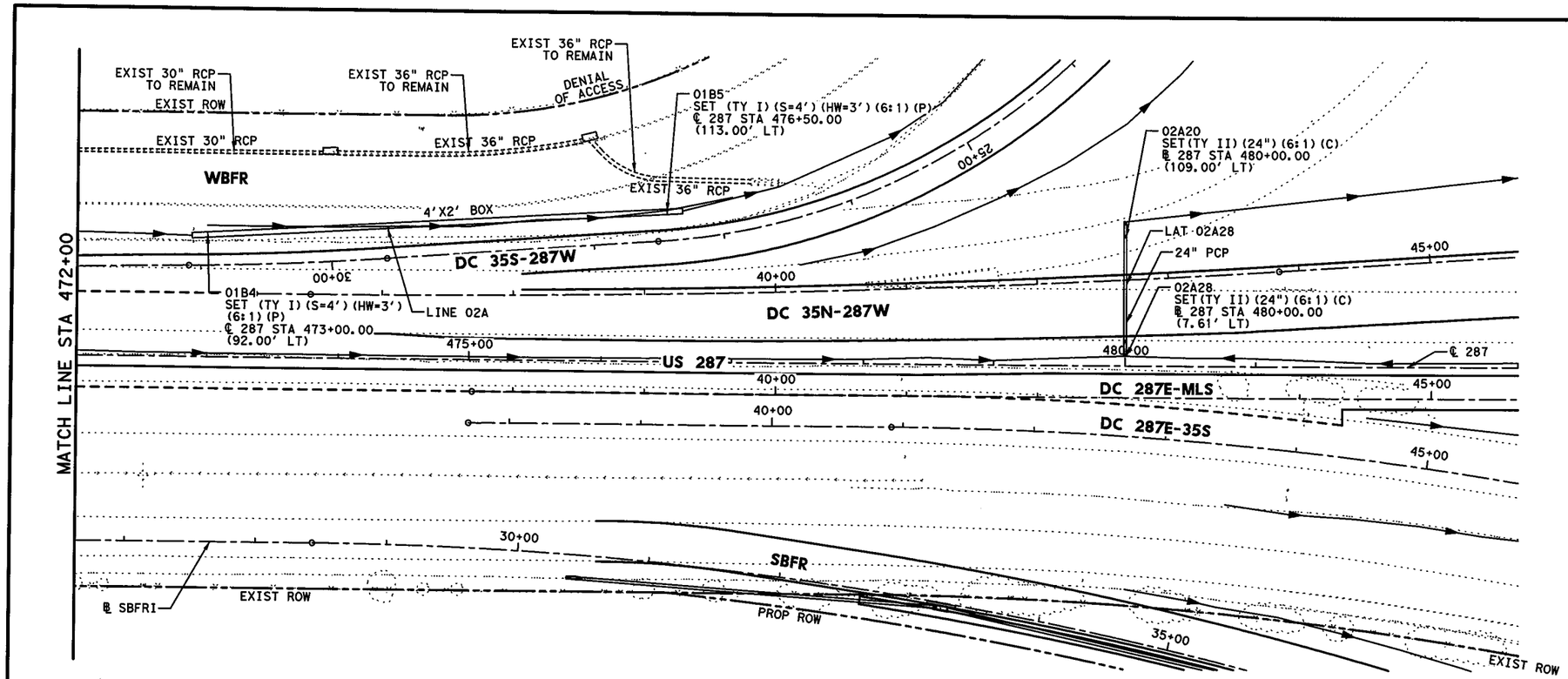

HORZ 0' 25' 50' 100'

SCALE IN FEET

GENERAL NOTES

1. ALL LOCATIONS FOR CURB INLETS ARE SHOWN TO THE FACE OF CURB.
2. ALL LOCATIONS FOR DITCH INLETS, GRATE INLETS, AND MANHOLES ARE SHOWN TO CENTER POINT (CP) OF INLET BOX OR MANHOLE BOX.
3. REFERENCE ROADWAY PLAN AND PROFILE SHEETS FOR ADDITIONAL INFORMATION.
4. REFERENCE CULVERT PLAN AND PROFILE SHEETS FOR ADDITIONAL INFORMATION.
5. REFERENCE DRIVEWAY DETAIL SHEETS FOR ADDITIONAL INFORMATION.
6. (GI) = GRATE INLET (DI) = DROP INLET
   (CI) = CURB INLET (MH) = MANHOLE
   (TR) = TOP OF RIM (TG) = TOP OF GRATE
   (TC) = TOP OF CURB
   (W/DB) = WITH DITCH BLOCK
7. GEOPAK DRAINAGE WAS USED FOR THE STORM SEWER DESIGN COMPUTATIONS.
8. HGL REFLECTS 10 YR DESIGN STORM.
9. REFER TO CROSS-SECTIONS FOR DITCH INFORMATION.

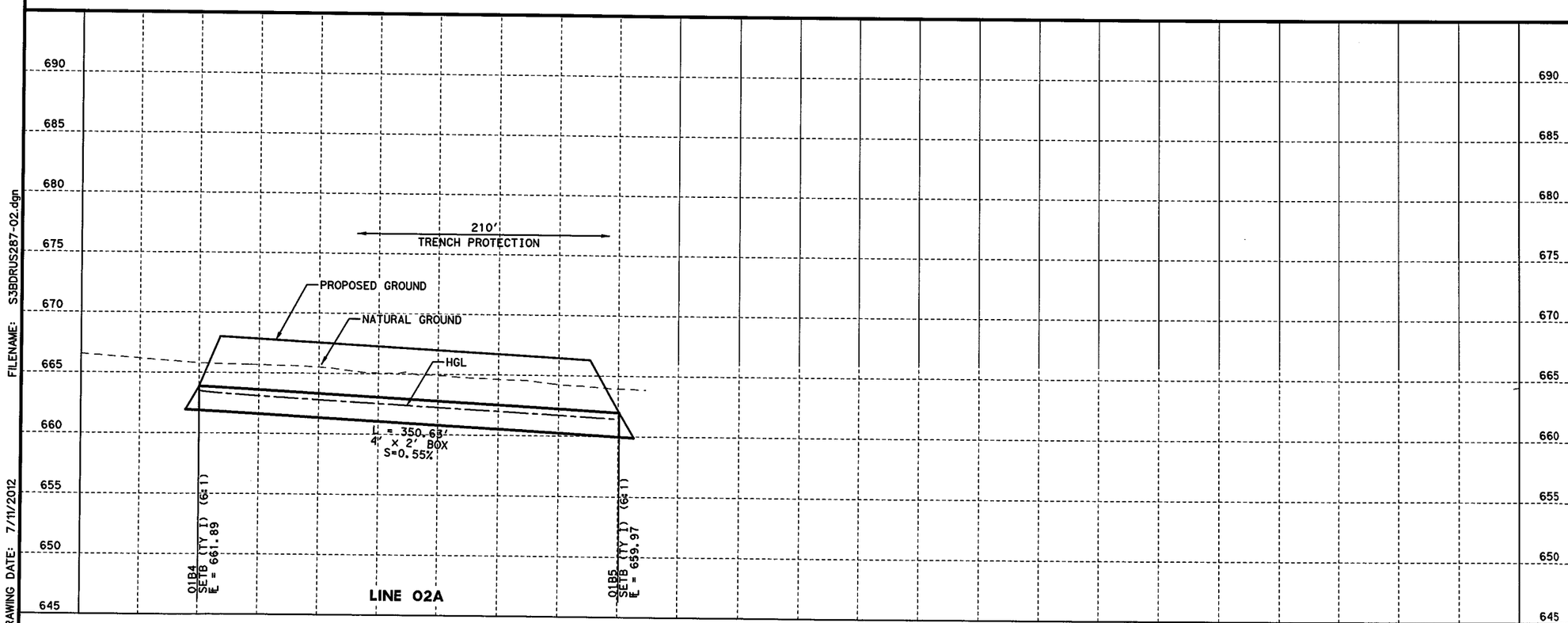

STATE OF TEXAS
SHAFEE YUSUF
94963
LICENSED
PROFESSIONAL ENGINEER
7/11/12

I. S. ENGINEERS, LLC
TBPE REG. # F-11657

Texas Department of Transportation
© 2012

IH 35W FROM NORTH TARRANT PKWY TO IH 820

DRAINAGE PLAN & PROFILE

US 287

STA 472+00 TO END

SCALE: 1" = 100' H, 1" = 10' V

SHEET 2 OF 2

DESIGN	FED.RD. DIV.NO.	FEDERAL AID PROJECT NO.		HIGHWAY NO.
BV	6	(SEE TITLE SHEET)		IH 35W
GRAPHICS	STATE	DISTRICT	COUNTY	SHEET NO.
ZS	TEXAS	FTW	TARRANT	
CHECK	CONTROL	SECTION	JOB	
SY	0014	16	255, ETC.	1269
CHECK				
MNM				

FILENAME: S3BDRUS287-02.dgn

DRAWING DATE: 7/11/2012

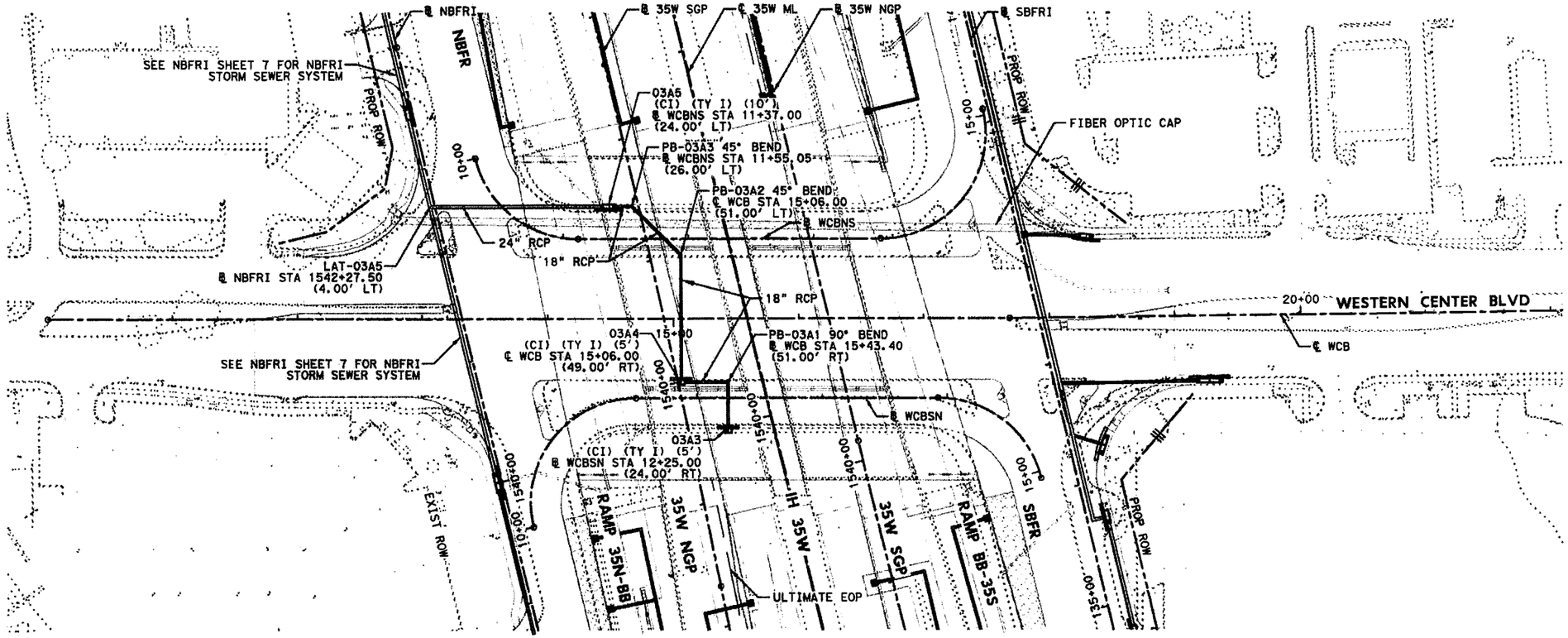

HORZ 0' 25' 50' 100'
VERT 0' 5' 10'
SCALE IN FEET

GENERAL NOTES

1. ALL LOCATIONS FOR CURB INLETS ARE SHOWN TO THE FACE OF CURB.
2. ALL LOCATIONS FOR DITCH INLETS, GRATE INLETS, AND MANHOLES ARE SHOWN TO CENTER POINT (CP) OF INLET BOX OR MANHOLE BOX.
3. REFERENCE ROADWAY PLAN AND PROFILE SHEETS FOR ADDITIONAL INFORMATION.
4. REFERENCE CULVERT PLAN AND PROFILE SHEETS FOR ADDITIONAL INFORMATION.
5. REFERENCE DRIVEWAY DETAIL SHEETS FOR ADDITIONAL INFORMATION.
6. (GI) = GRATE INLET (DI) = DROP INLET
   (CI) = CURB INLET (MH) = MANHOLE
   (TR) = TOP OF RIM (TG) = TOP OF GRATE
   (TC) = TOP OF CURB
   (W/DB) = WITH DITCH BLOCK
7. GEOPAK DRAINAGE WAS USED FOR THE STORM SEWER DESIGN COMPUTATIONS.
8. HGL REFLECTS 10 YR DESIGN STORM.
9. REFER TO CROSS-SECTIONS FOR DITCH INFORMATION.

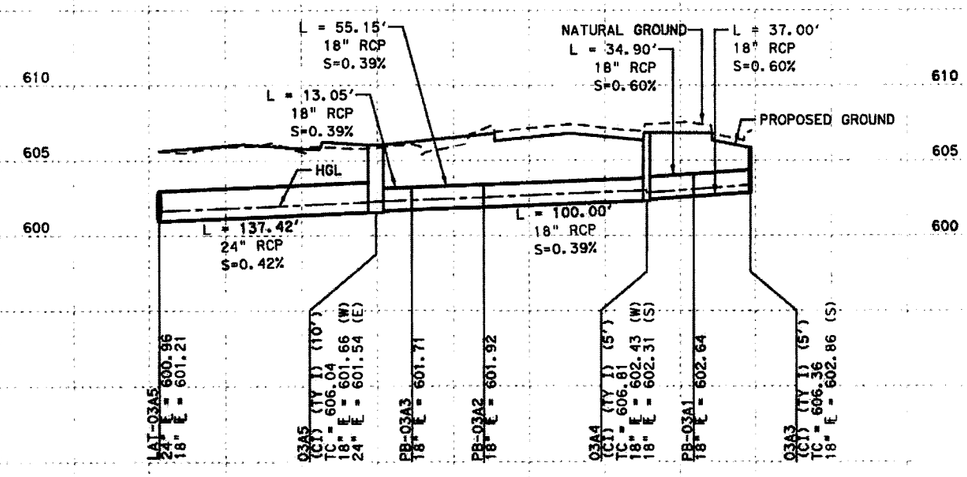

LAT 03A5

STATE OF TEXAS
RYAN S. HAGUE
100898
LICENSED
PROFESSIONAL ENGINEER

7/9/12

CP&Y, INC.
TBPE REGISTRATION NO. F-1741

Texas Department of Transportation
© 2012

IH 35W FROM NORTH TARRANT PKWY TO IH 820

DRAINAGE PLAN & PROFILE
WESTERN CENTER BLVD

SCALE: 1" = 100' H, 1" = 10' V — SHEET 1 OF 1

DESIGN	FED. RD. DIV. NO.	FEDERAL AID PROJECT NO.		HIGHWAY NO.
CPY	6	(SEE TITLE SHEET)		IH 35W
GRAPHICS CPY	STATE	DISTRICT	COUNTY	SHEET NO.
CHECK CPY	TEXAS	FTW	TARRANT	1270
CHECK CPY	CONTROL 0014	SECTION 16	JOB 255, ETC.	

FILENAME: S3BWCBDPP01.dgn
DRAWING DATE: 7/13/2012

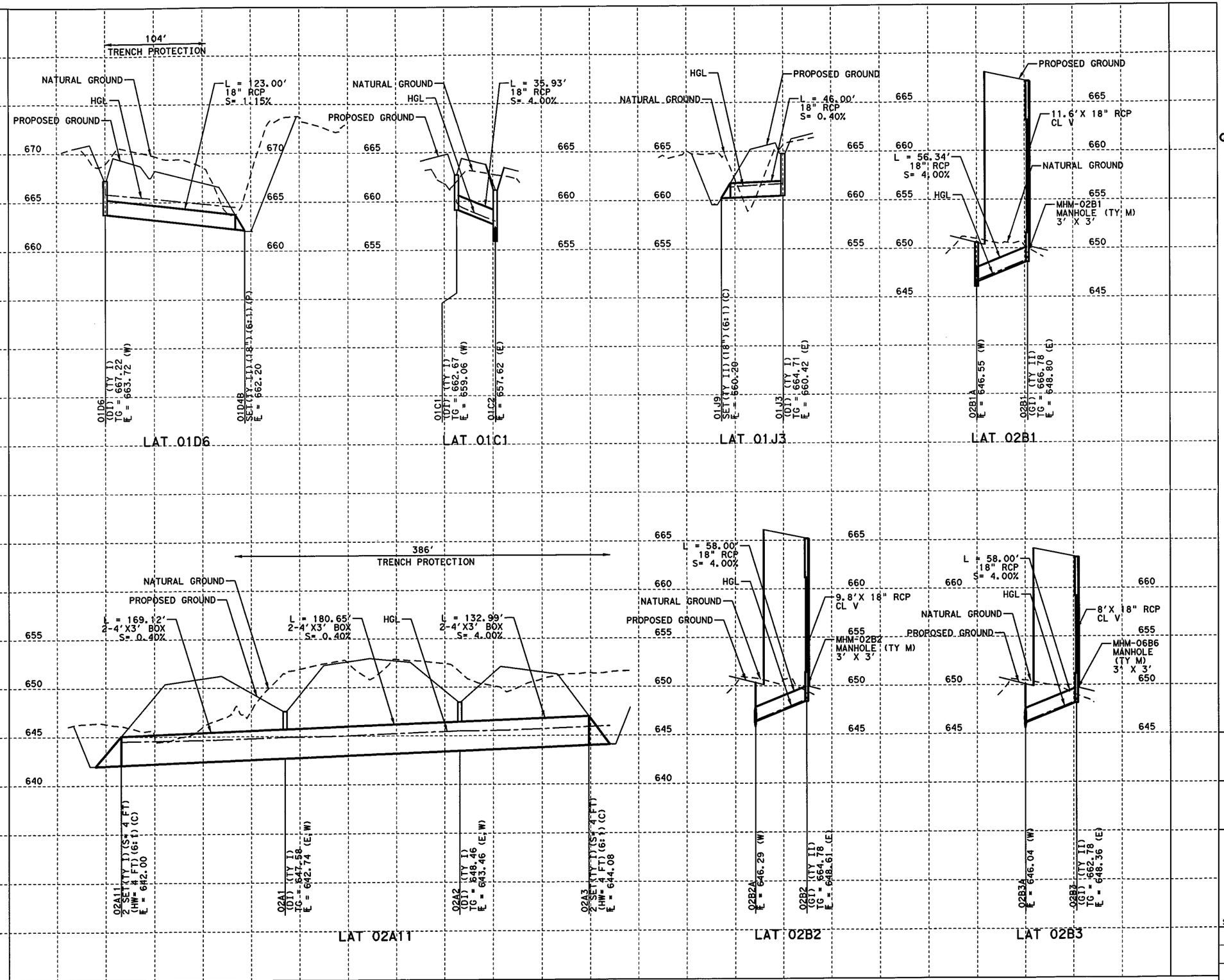

HORZ 0' 25' 50' 100'
VERT 0' 5' 10'
SCALE IN FEET

GENERAL NOTES

1. ALL LOCATIONS FOR CURB INLETS ARE SHOWN TO THE FACE OF CURB.
2. ALL LOCATIONS FOR DITCH INLETS, GRATE INLETS, AND MANHOLES ARE SHOWN TO CENTER POINT (CP) OF INLET BOX OR MANHOLE BOX.
3. REFERENCE ROADWAY PLAN AND PROFILE SHEETS FOR ADDITIONAL INFORMATION.
4. REFERENCE CULVERT PLAN AND PROFILE SHEETS FOR ADDITIONAL INFORMATION.
5. REFERENCE DRIVEWAY DETAIL SHEETS FOR ADDITIONAL INFORMATION.
6. (GI) = GRATE INLET (DI) = DROP INLET
   (CI) = CURB INLET (MH) = MANHOLE
   (TR) = TOP OF RIM (TG) = TOP OF GRATE
   (TC) = TOP OF CURB
   (W/DB) = WITH DITCH BLOCK
7. GEOPAK DRAINAGE WAS USED FOR THE STORM SEWER DESIGN COMPUTATIONS.
8. HGL REFLECTS 10 YR DESIGN STORM.

STATE OF TEXAS
SHAFEE YUSUF
94963
LICENSED
PROFESSIONAL ENGINEER
8/29/12

I. S. ENGINEERS, LLC
TBPE REG. # F-11657

Texas Department of Transportation
© 2012

IH 35W FROM NORTH TARRANT PKWY TO IH 820

DRAINAGE PROFILES
LATERALS

SCALE: 1" = 100' H, 1" = 10' V — SHEET 1 OF 12

DESIGN	FED.RD. DIV.NO.	FEDERAL AID PROJECT NO.		HIGHWAY NO.
BV	6	(SEE TITLE SHEET)		IH 35W
GRAPHICS	STATE	DISTRICT	COUNTY	SHEET NO.
ZS	TEXAS	FTW	TARRANT	
CHECK	CONTROL	SECTION	JOB	
SY	0014	16	255, ETC.	1271
CHECK				
MNM				

FILENAME: S3BDRLAT01.dgn
DRAWING DATE: 8/27/2012

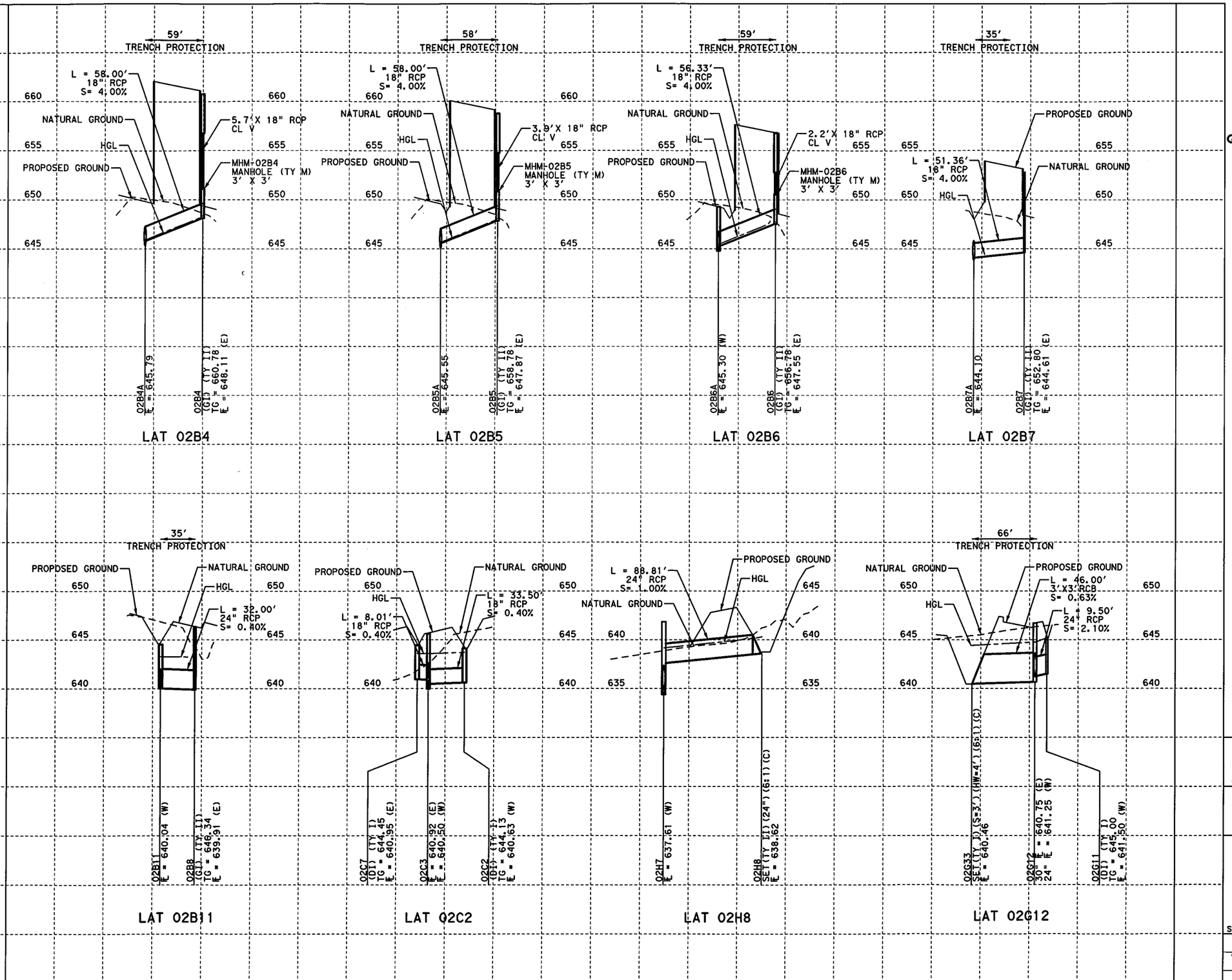

HORZ 0' 25' 50' 100'
VERT 0' 5' 10'
SCALE IN FEET

GENERAL NOTES

1. ALL LOCATIONS FOR CURB INLETS ARE SHOWN TO THE FACE OF CURB.
2. ALL LOCATIONS FOR DITCH INLETS, GRATE INLETS, AND MANHOLES ARE SHOWN TO CENTER POINT (CP) OF INLET BOX OR MANHOLE BOX.
3. REFERENCE ROADWAY PLAN AND PROFILE SHEETS FOR ADDITIONAL INFORMATION.
4. REFERENCE CULVERT PLAN AND PROFILE SHEETS FOR ADDITIONAL INFORMATION.
5. REFERENCE DRIVEWAY DETAIL SHEETS FOR ADDITIONAL INFORMATION.
6. (GI) = GRATE INLET (DI) = DROP INLET
   (CI) = CURB INLET (MH) = MANHOLE
   (TR) = TOP OF RIM (TG) = TOP OF GRATE
   (TC) = TOP OF CURB
   (W/DB) = WITH DITCH BLOCK
7. GEOPAK DRAINAGE WAS USED FOR THE STORM SEWER DESIGN COMPUTATIONS.
8. HGL REFLECTS 10 YR DESIGN STORM.

STATE OF TEXAS
SHAFEE YUSUF
94963
LICENSED
PROFESSIONAL ENGINEER
8/29/12

I. S. ENGINEERS, LLC
TBPE REG. # F-11657

Texas Department of Transportation
© 2012

IH 35W FROM NORTH TARRANT PKWY TO IH 820

DRAINAGE PROFILES
LATERALS

SCALE: 1" = 100' H, 1" = 10' V
SHEET 2 OF 12

DESIGN	FED.RD. DIV.NO.	FEDERAL AID PROJECT NO.		HIGHWAY NO.
BV	6	(SEE TITLE SHEET)		IH 35W
GRAPHICS ZS	STATE	DISTRICT	COUNTY	SHEET NO.
CHECK SY	TEXAS	FTW	TARRANT	1272
CHECK MNM	CONTROL	SECTION	JOB	
	0014	16	255, ETC.	

FILENAME: S3BDRLAT02.dgn
DRAWING DATE: 8/27/2012

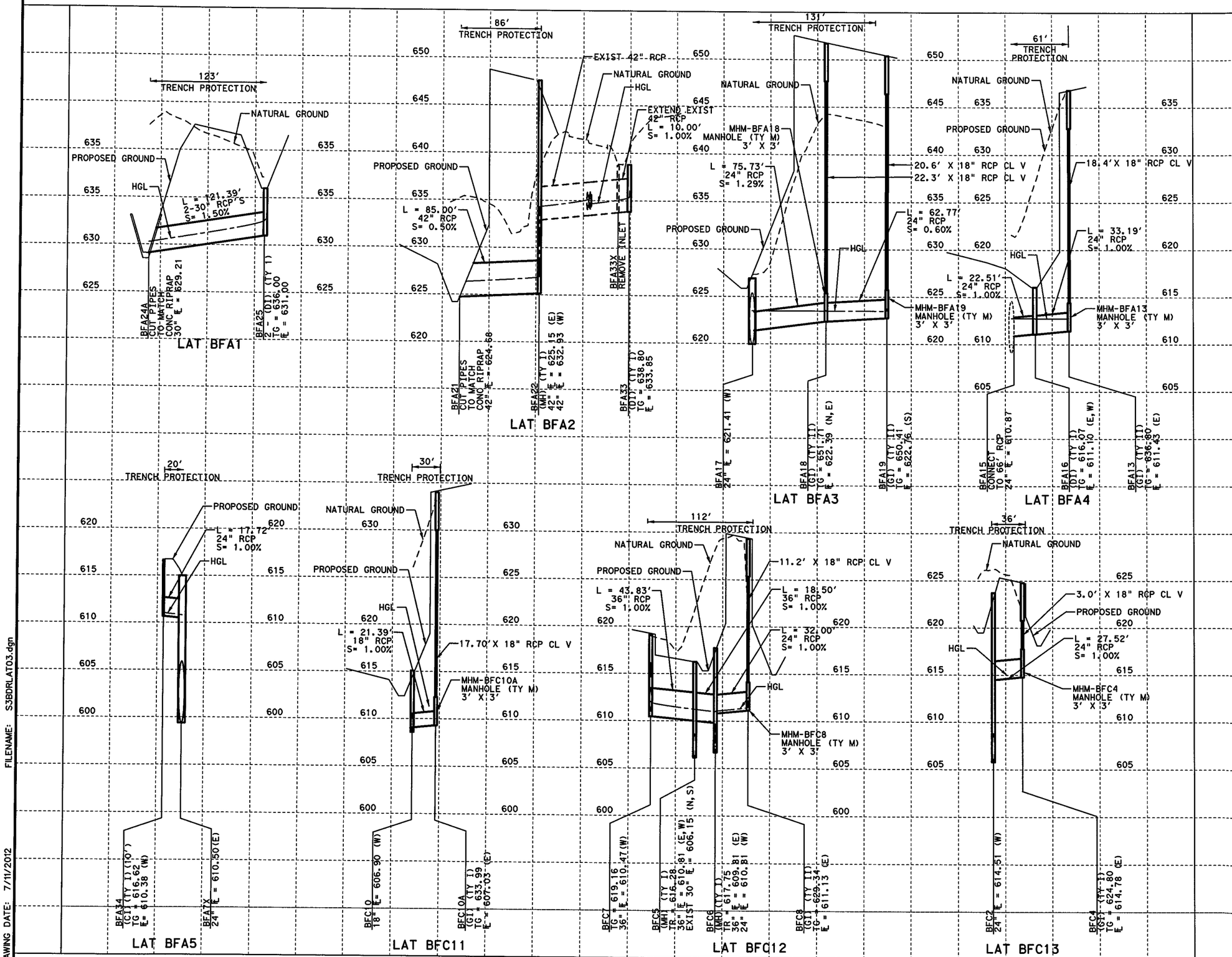

HORZ 0' 25' 50' 100'
VERT 0' 5' 10'
SCALE IN FEET

GENERAL NOTES

1. ALL LOCATIONS FOR CURB INLETS ARE SHOWN TO THE FACE OF CURB.
2. ALL LOCATIONS FOR DITCH INLETS, GRATE INLETS, AND MANHOLES ARE SHOWN TO CENTER POINT (CP) OF INLET BOX OR MANHOLE BOX.
3. REFERENCE ROADWAY PLAN AND PROFILE SHEETS FOR ADDITIONAL INFORMATION.
4. REFERENCE CULVERT PLAN AND PROFILE SHEETS FOR ADDITIONAL INFORMATION.
5. REFERENCE DRIVEWAY DETAIL SHEETS FOR ADDITIONAL INFORMATION.
6. (GI) = GRATE INLET (DI) = DROP INLET
   (CI) = CURB INLET (MH) = MANHOLE
   (TR) = TOP OF RIM (TG) = TOP OF GRATE
   (TC) = TOP OF CURB
   (W/DB) = WITH DITCH BLOCK
7. GEOPAK DRAINAGE WAS USED FOR THE STORM SEWER DESIGN COMPUTATIONS.
8. HGL REFLECTS 10 YR DESIGN STORM.

STATE OF TEXAS
B. VANDERWALT
81580
LICENSED
PROFESSIONAL ENGINEER
B. Vanderwalt P.E.
7/11/2012

I. S. ENGINEERS, LLC
TBPE REG. # F-11657

Texas Department of Transportation
© 2012

IH 35W FROM NORTH TARRANT PKWY TO IH 820

DRAINAGE PROFILES
LATERALS

SCALE: 1" = 100' H, 1" = 10' V — SHEET 3 OF 12

DESIGN	FED.RD. DIV.NO.	FEDERAL AID PROJECT NO.		HIGHWAY NO.
BV	6	(SEE TITLE SHEET)		IH 35W
GRAPHICS	STATE	DISTRICT	COUNTY	SHEET NO.
ZS	TEXAS	FTW	TARRANT	1273
CHECK	CONTROL	SECTION	JOB	
SY	0014	16	255, ETC.	
CHECK				
MNM				

FILENAME: S3BDRLAT03.dgn
DRAWING DATE: 7/11/2012

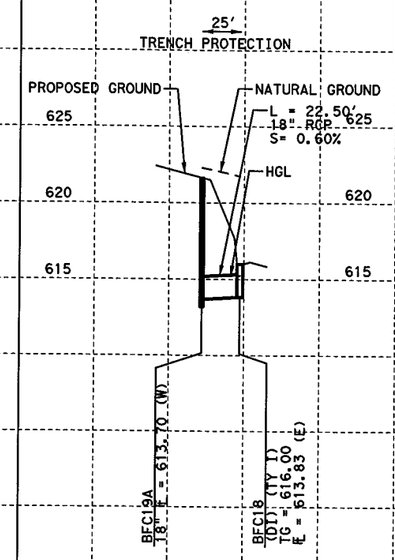

LAT BFC2

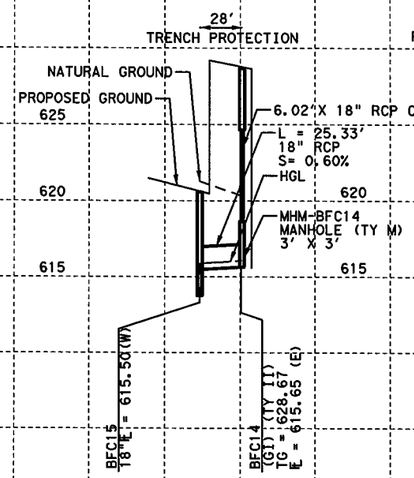

LAT BFC4

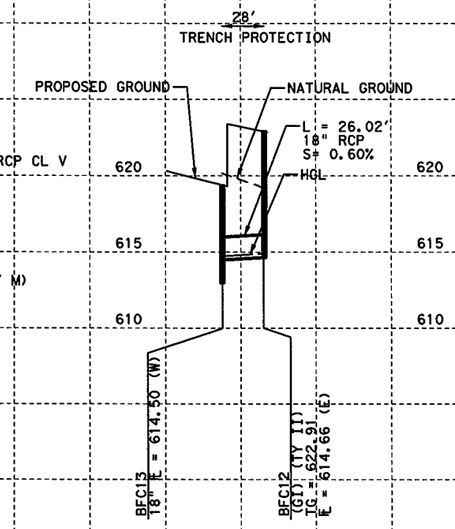

LAT BFC5

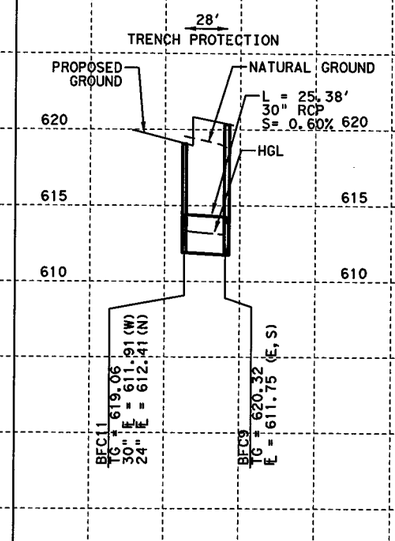

LAT BFC6

HORZ 0' 25' 50' 100'
VERT 0' 5' 10'
SCALE IN FEET

GENERAL NOTES

1. ALL LOCATIONS FOR CURB INLETS ARE SHOWN TO THE FACE OF CURB.
2. ALL LOCATIONS FOR DITCH INLETS, GRATE INLETS, AND MANHOLES ARE SHOWN TO CENTER POINT (CP) OF INLET BOX OR MANHOLE BOX.
3. REFERENCE ROADWAY PLAN AND PROFILE SHEETS FOR ADDITIONAL INFORMATION.
4. REFERENCE CULVERT PLAN AND PROFILE SHEETS FOR ADDITIONAL INFORMATION.
5. REFERENCE DRIVEWAY DETAIL SHEETS FOR ADDITIONAL INFORMATION.
6. (GI) = GRATE INLET (DI) = DROP INLET
   (CI) = CURB INLET (MH) = MANHOLE
   (TR) = TOP OF RIM (TG) = TOP OF GRATE
   (TC) = TOP OF CURB
   (W/DB) = WITH DITCH BLOCK
7. GEOPAK DRAINAGE WAS USED FOR THE STORM SEWER DESIGN COMPUTATIONS.
8. HGL REFLECTS 10 YR DESIGN STORM.

STATE OF TEXAS
B. VANDERWALT
81580
LICENSED
PROFESSIONAL ENGINEER
7/11/2012

I. S. ENGINEERS, LLC
TBPE REG. # F-11657

Texas Department of Transportation
© 2012

IH 35W FROM NORTH TARRANT PKWY TO IH 820

DRAINAGE PROFILES

LATERALS

SCALE: 1" = 100' H, 1" = 10' V

SHEET 4 OF 12

DESIGN	FED.RD. DIV.NO.	FEDERAL AID PROJECT NO.		HIGHWAY NO.
BV	6	(SEE TITLE SHEET)		IH 35W
GRAPHICS ZS	STATE	DISTRICT	COUNTY	SHEET NO.
CHECK SY	TEXAS	FTW	TARRANT	1274
CHECK MNM	CONTROL 0014	SECTION 16	JOB 255, ETC.	

FILENAME: S3BDRLAT04.dgn

DRAWING DATE: 7/11/2012

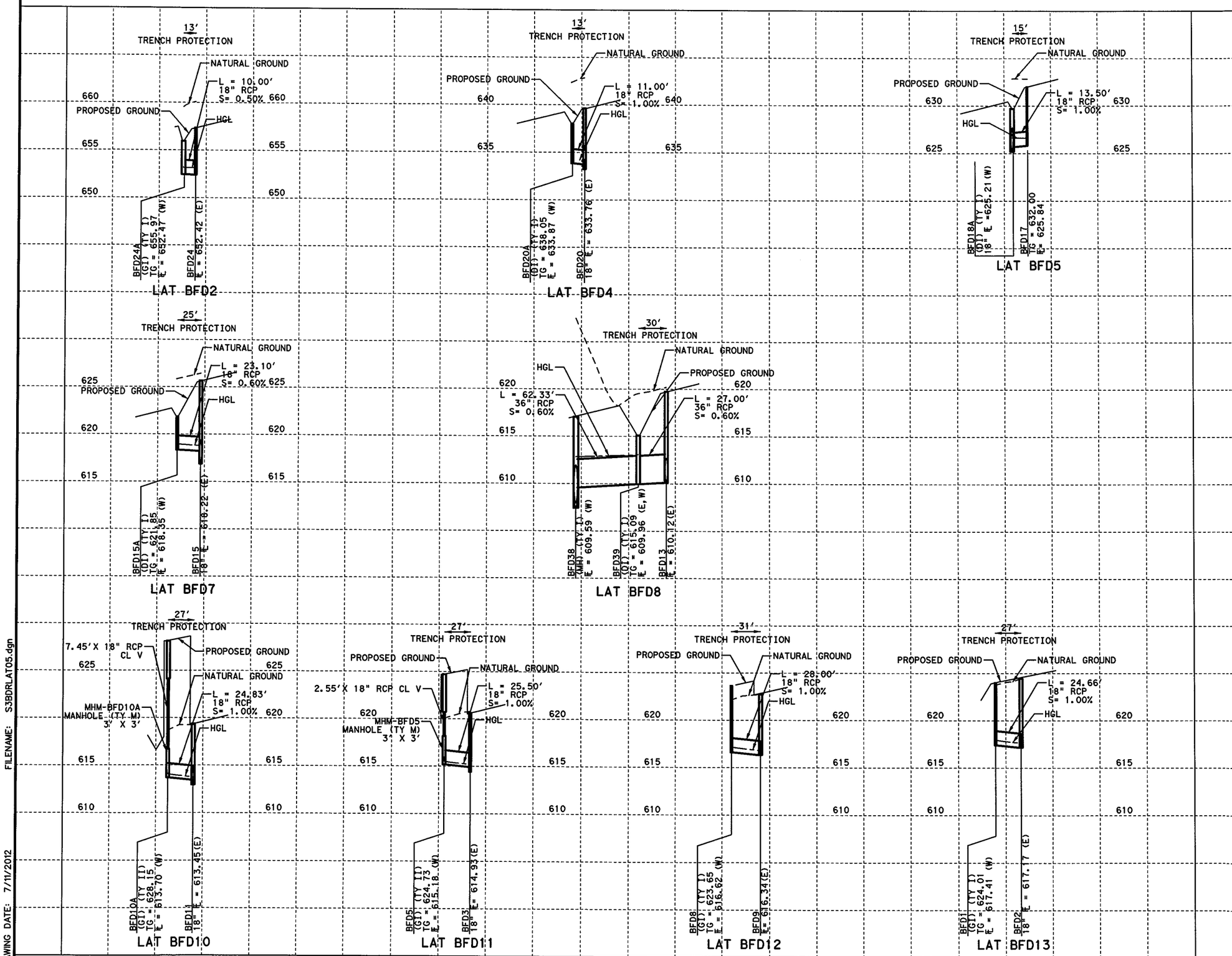

HORZ 0' 25' 50' 100'
VERT 0' 5' 10'
SCALE IN FEET

GENERAL NOTES

1. ALL LOCATIONS FOR CURB INLETS ARE SHOWN TO THE FACE OF CURB.
2. ALL LOCATIONS FOR DITCH INLETS, GRATE INLETS, AND MANHOLES ARE SHOWN TO CENTER POINT (CP) OF INLET BOX OR MANHOLE BOX.
3. REFERENCE ROADWAY PLAN AND PROFILE SHEETS FOR ADDITIONAL INFORMATION.
4. REFERENCE CULVERT PLAN AND PROFILE SHEETS FOR ADDITIONAL INFORMATION.
5. REFERENCE DRIVEWAY DETAIL SHEETS FOR ADDITIONAL INFORMATION.
6. (GI) = GRATE INLET (DI) = DROP INLET
   (CI) = CURB INLET (MH) = MANHOLE
   (TR) = TOP OF RIM (TG) = TOP OF GRATE
   (TC) = TOP OF CURB
   (W/DB) = WITH DITCH BLOCK
7. GEOPAK DRAINAGE WAS USED FOR THE STORM SEWER DESIGN COMPUTATIONS.
8. HGL REFLECTS 10 YR DESIGN STORM.

STATE OF TEXAS
B. VANDERWALT
81580
LICENSED
PROFESSIONAL ENGINEER
7/11/2012

I. S. ENGINEERS, LLC
TBPE REG. # F-11657

Texas Department of Transportation
© 2012

IH 35W FROM NORTH TARRANT PKWY TO IH 820

DRAINAGE PROFILES

LATERALS

SCALE: 1" = 100' H, 1" = 10' V — SHEET 5 OF 12

DESIGN	FED.RD. DIV.NO.	FEDERAL AID PROJECT NO.		HIGHWAY NO.
BV	6	(SEE TITLE SHEET)		IH 35W
GRAPHICS	STATE	DISTRICT	COUNTY	SHEET NO.
ZS	TEXAS	FTW	TARRANT	
CHECK	CONTROL	SECTION	JOB	
SY	0014	16	255, ETC.	1275
CHECK				
MNM				

FILENAME: S3BDRLAT05.dgn
DRAWING DATE: 7/11/2012

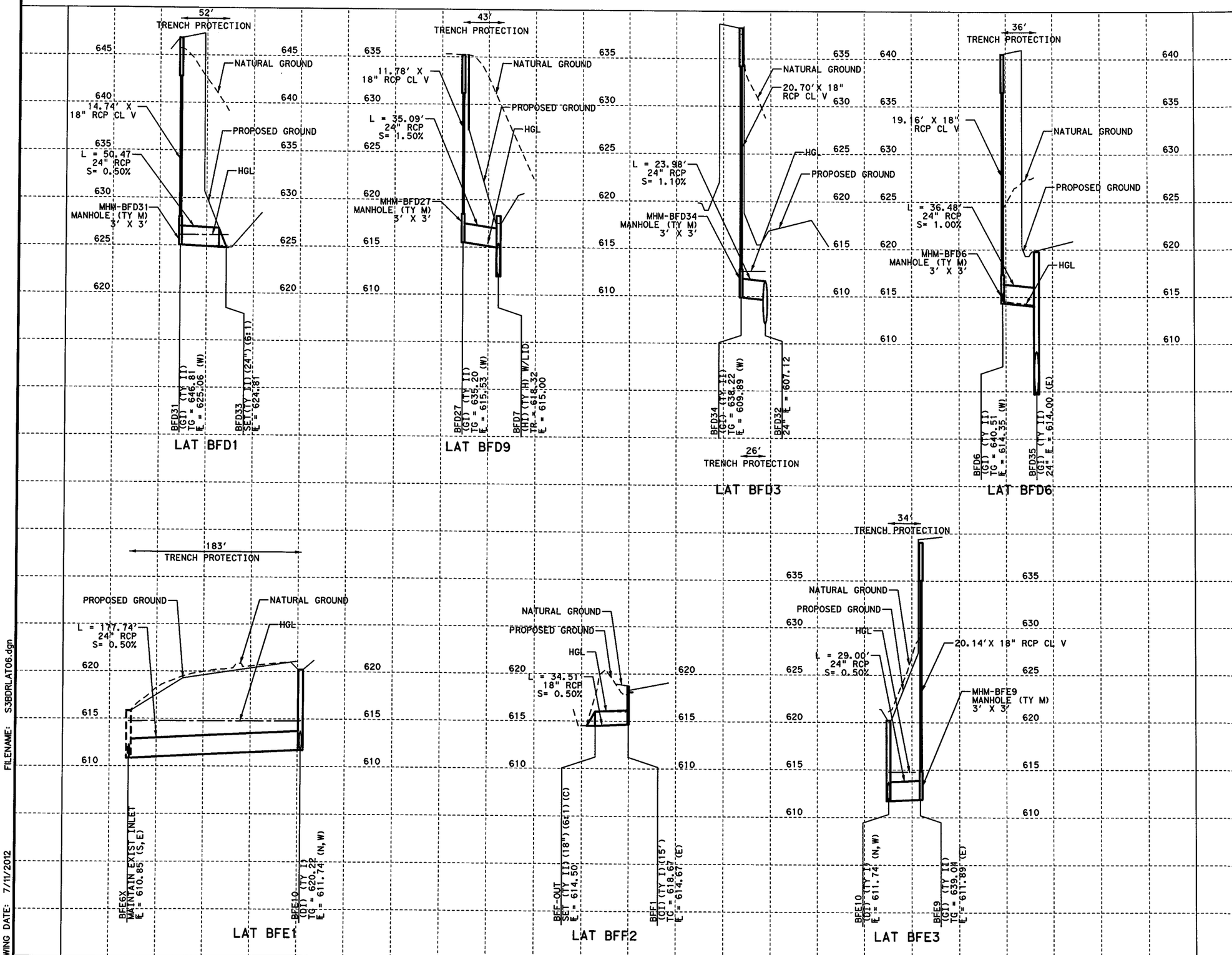

GENERAL NOTES

1. ALL LOCATIONS FOR CURB INLETS ARE SHOWN TO THE FACE OF CURB.
2. ALL LOCATIONS FOR DITCH INLETS, GRATE INLETS, AND MANHOLES ARE SHOWN TO CENTER POINT (CP) OF INLET BOX OR MANHOLE BOX.
3. REFERENCE ROADWAY PLAN AND PROFILE SHEETS FOR ADDITIONAL INFORMATION.
4. REFERENCE CULVERT PLAN AND PROFILE SHEETS FOR ADDITIONAL INFORMATION.
5. REFERENCE DRIVEWAY DETAIL SHEETS FOR ADDITIONAL INFORMATION.
6. (GI) = GRATE INLET (DI) = DROP INLET
   (CI) = CURB INLET (MH) = MANHOLE
   (TR) = TOP OF RIM (TG) = TOP OF GRATE
   (TC) = TOP OF CURB
   (W/DB) = WITH DITCH BLOCK
7. GEOPAK DRAINAGE WAS USED FOR THE STORM SEWER DESIGN COMPUTATIONS.
8. HGL REFLECTS 10 YR DESIGN STORM.

STATE OF TEXAS
B. VANDERWALT
81580
LICENSED
PROFESSIONAL ENGINEER
B. Vanderwalt P.E.
7/11/2012

I. S. ENGINEERS, LLC
TBPE REG. # F-11657

Texas Department of Transportation
© 2012

IH 35W FROM NORTH TARRANT PKWY TO IH 820

DRAINAGE PROFILES

LATERALS

SCALE: 1" = 100' H, 1" = 10' V — SHEET 6 OF 12

DESIGN	FED.RD. DIV.NO.	FEDERAL AID PROJECT NO.		HIGHWAY NO.
BV	6	(SEE TITLE SHEET)		IH 35W
GRAPHICS ZS	STATE	DISTRICT	COUNTY	SHEET NO.
CHECK SY	TEXAS	FTW	TARRANT	1276
CHECK MNM	CONTROL 0014	SECTION 16	JOB 255, ETC.	

FILENAME: S3BDRLAT06.dgn
DRAWING DATE: 7/11/2012

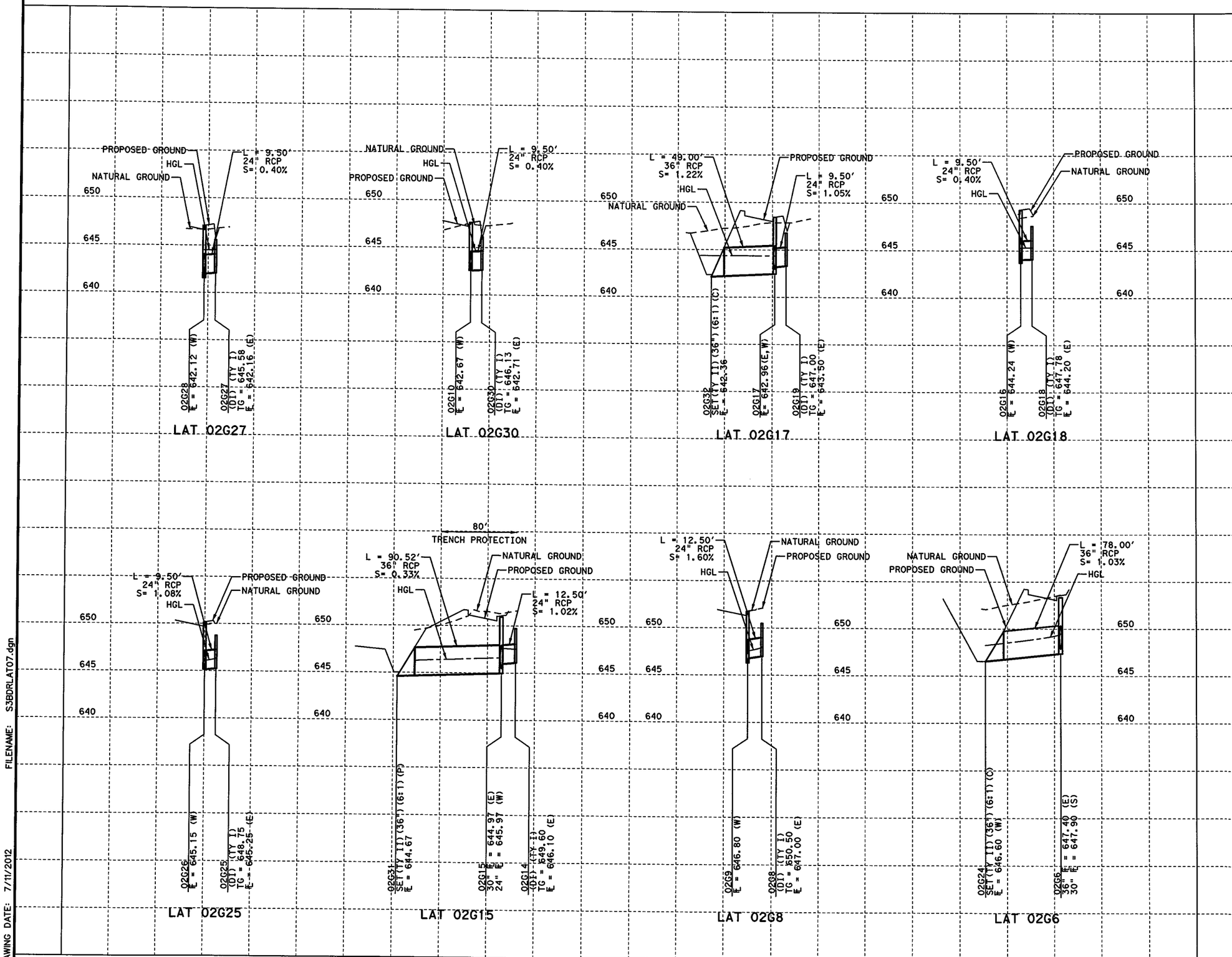

HORZ 0' 25' 50' 100'
VERT 0' 5' 10'
SCALE IN FEET

GENERAL NOTES

1. ALL LOCATIONS FOR CURB INLETS ARE SHOWN TO THE FACE OF CURB.
2. ALL LOCATIONS FOR DITCH INLETS, GRATE INLETS, AND MANHOLES ARE SHOWN TO CENTER POINT (CP) OF INLET BOX OR MANHOLE BOX.
3. REFERENCE ROADWAY PLAN AND PROFILE SHEETS FOR ADDITIONAL INFORMATION.
4. REFERENCE CULVERT PLAN AND PROFILE SHEETS FOR ADDITIONAL INFORMATION.
5. REFERENCE DRIVEWAY DETAIL SHEETS FOR ADDITIONAL INFORMATION.
6. (GI) = GRATE INLET (DI) = DROP INLET
   (CI) = CURB INLET (MH) = MANHOLE
   (TR) = TOP OF RIM (TG) = TOP OF GRATE
   (TC) = TOP OF CURB
   (W/DB) = WITH DITCH BLOCK
7. GEOPAK DRAINAGE WAS USED FOR THE STORM SEWER DESIGN COMPUTATIONS.
8. HGL REFLECTS 10 YR DESIGN STORM.

STATE OF TEXAS
SHAFEE YUSUF
94963
LICENSED
PROFESSIONAL ENGINEER
7/11/12

I. S. ENGINEERS, LLC
TBPE REG. # F-11657

Texas Department of Transportation
© 2012

IH 35W FROM NORTH TARRANT PKWY TO IH 820

DRAINAGE PROFILES
LATERALS

SCALE: 1" = 100' H, 1" = 10' V — SHEET 7 OF 12

DESIGN	FED.RD. DIV.NO.	FEDERAL AID PROJECT NO.		HIGHWAY NO.
BV	6	(SEE TITLE SHEET)		IH 35W
GRAPHICS ZS	STATE	DISTRICT	COUNTY	SHEET NO.
CHECK SY	TEXAS	FTW	TARRANT	1277
CHECK MNM	CONTROL 0014	SECTION 16	JOB 255, ETC.	

FILENAME: S3BDRLAT07.dgn
DRAWING DATE: 7/11/2012

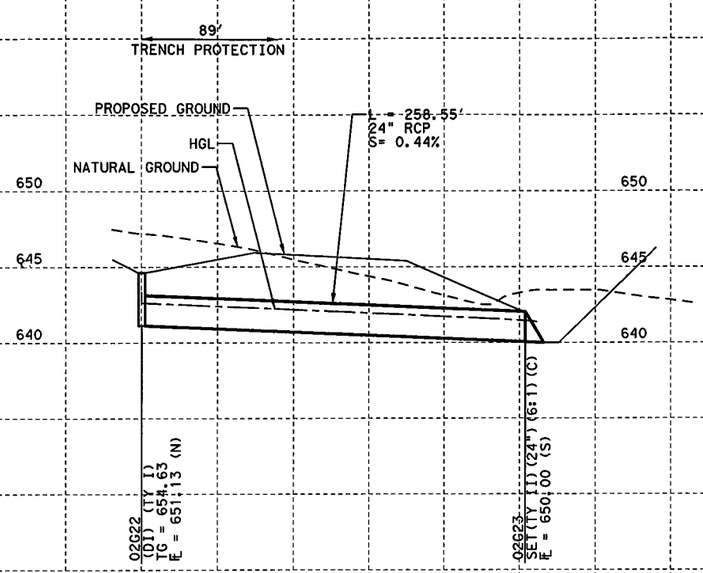

LAT 02G22

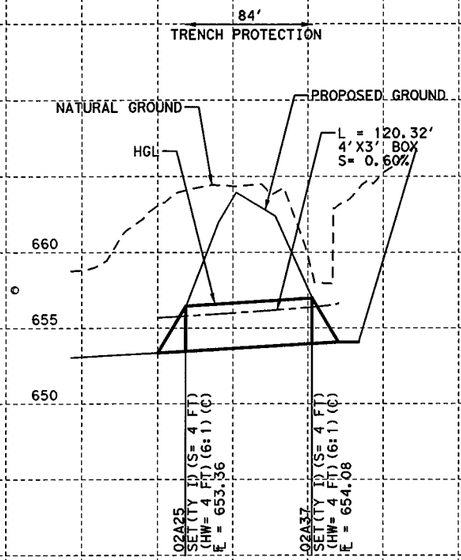

LAT 02A37

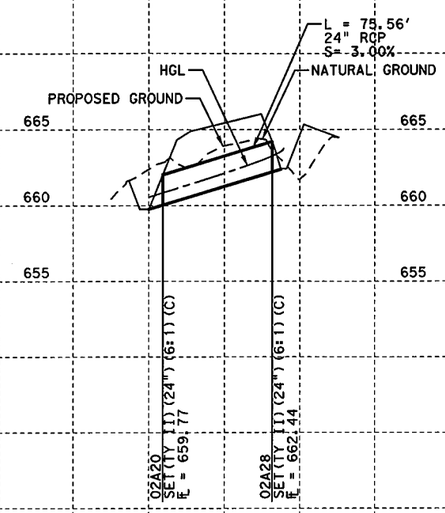

LAT 02A28

HORZ 0' 25' 50' 100'
VERT 0' 5' 10'
SCALE IN FEET

GENERAL NOTES

1. ALL LOCATIONS FOR CURB INLETS ARE SHOWN TO THE FACE OF CURB.
2. ALL LOCATIONS FOR DITCH INLETS, GRATE INLETS, AND MANHOLES ARE SHOWN TO CENTER POINT (CP) OF INLET BOX OR MANHOLE BOX.
3. REFERENCE ROADWAY PLAN AND PROFILE SHEETS FOR ADDITIONAL INFORMATION.
4. REFERENCE CULVERT PLAN AND PROFILE SHEETS FOR ADDITIONAL INFORMATION.
5. REFERENCE DRIVEWAY DETAIL SHEETS FOR ADDITIONAL INFORMATION.
6. (GI) = GRATE INLET (DI) = DROP INLET
   (CI) = CURB INLET (MH) = MANHOLE
   (TR) = TOP OF RIM (TG) = TOP OF GRATE
   (TC) = TOP OF CURB
   (W/DB) = WITH DITCH BLOCK
7. GEOPAK DRAINAGE WAS USED FOR THE STORM SEWER DESIGN COMPUTATIONS.
8. HGL REFLECTS 10 YR DESIGN STORM.

STATE OF TEXAS
SHAFEE YUSUF
94963
LICENSED
PROFESSIONAL ENGINEER
8/29/12

I. S. ENGINEERS, LLC
TBPE REG. # F-11657

Texas Department of Transportation
© 2012

IH 35W FROM NORTH TARRANT PKWY TO IH 820

DRAINAGE PROFILES

LATERALS

SCALE: 1" = 100' H, 1" = 10' V

DESIGN	FED.RD. DIV.NO.	FEDERAL AID PROJECT NO.		HIGHWAY NO.
BV	6	(SEE TITLE SHEET)		IH 35W
GRAPHICS	STATE	DISTRICT	COUNTY	SHEET NO.
ZS	TEXAS	FTW	TARRANT	1278
CHECK	CONTROL	SECTION	JOB	
SY	0014	16	255, ETC.	
CHECK				
MNM				

FILENAME: S3BDRLAT08.dgn

DRAWING DATE: 8/27/2012

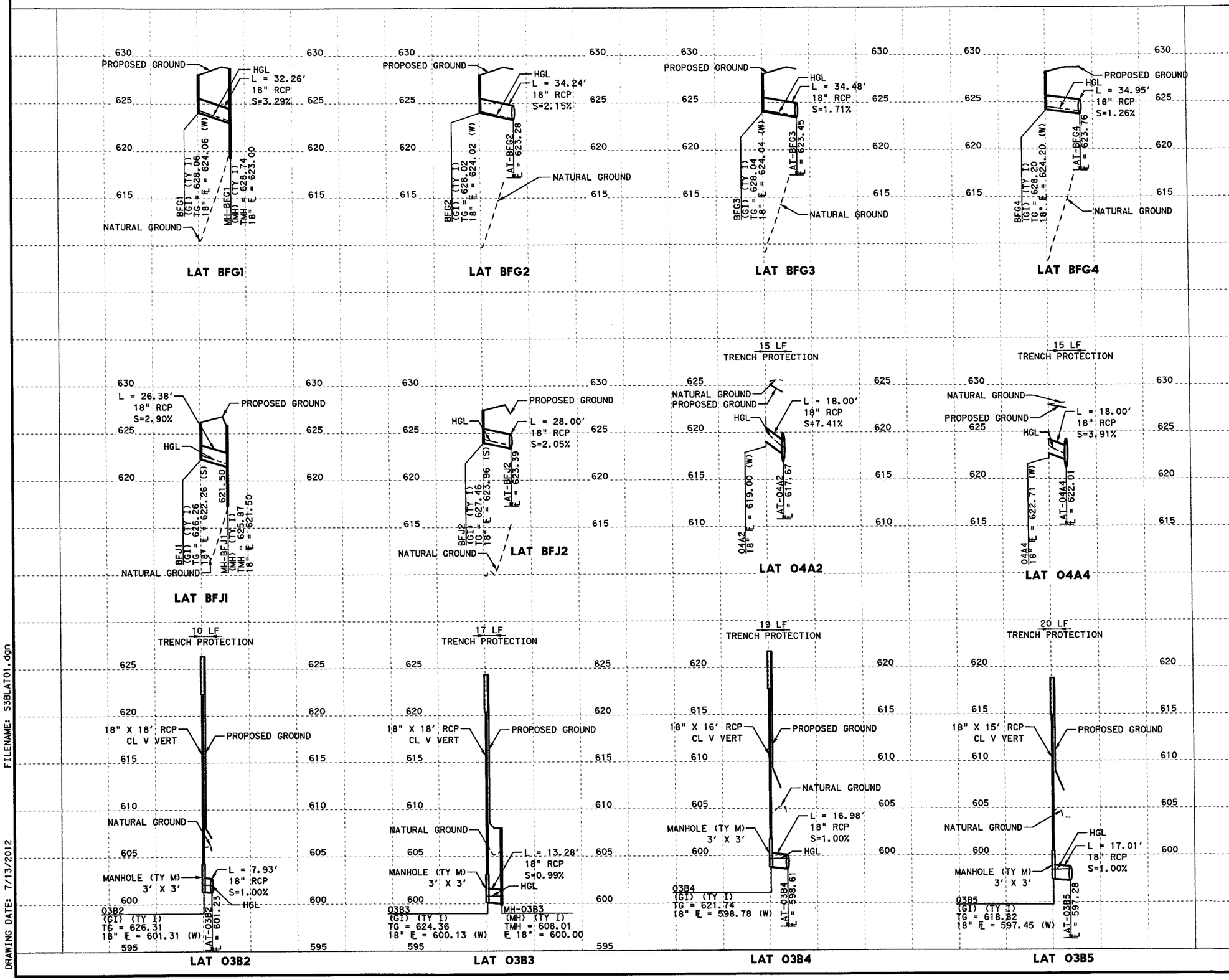

HORZ 0' 25' 50' 100'
VERT 0' 5' 10'
SCALE IN FEET

GENERAL NOTES

1. ALL LOCATIONS FOR CURB INLETS ARE SHOWN TO THE FACE OF CURB.
2. ALL LOCATIONS FOR DITCH INLETS, GRATE INLETS, AND MANHOLES ARE SHOWN TO CENTER POINT (CP) OF INLET BOX OR MANHOLE BOX.
3. REFERENCE ROADWAY PLAN AND PROFILE SHEETS FOR ADDITIONAL INFORMATION.
4. REFERENCE CULVERT PLAN AND PROFILE SHEETS FOR ADDITIONAL INFORMATION.
5. REFERENCE DRIVEWAY DETAIL SHEETS FOR ADDITIONAL INFORMATION.
6. (GI) = GRATE INLET (DI) = DROP INLET
   (CI) = CURB INLET (MH) = MANHOLE
   (TR) = TOP OF RIM (TG) = TOP OF GRATE
   (TC) = TOP OF CURB
   (W/DB) = WITH DITCH BLOCK
7. GEOPAK DRAINAGE WAS USED FOR THE STORM SEWER DESIGN COMPUTATIONS.
8. HGL REFLECTS 10 YR DESIGN STORM.
9. REFER TO CROSS-SECTIONS FOR DITCH INFORMATION.

STATE OF TEXAS
THOMAS E. T. COCHILL
87665
LICENSED
PROFESSIONAL ENGINEER

Thomas E. T. Cochill
7/6/12

CP&Y, INC.
TBPE REGISTRATION NO. F-1741

Texas Department of Transportation
© 2012

IH 35W FROM NORTH TARRANT PKWY TO IH 820

DRAINAGE PROFILES
LATERALS

SCALE: 1" = 100' H, 1" = 10' V — SHEET 9 OF 12

DESIGN	FED.RD. DIV.NO.	FEDERAL AID PROJECT NO.		HIGHWAY NO.
CPY	6	(SEE TITLE SHEET)		IH 35W
GRAPHICS	STATE	DISTRICT	COUNTY	SHEET NO.
CPY	TEXAS	FTW	TARRANT	1279
CHECK	CONTROL	SECTION	JOB	
CPY	0014	16	255, ETC.	

FILENAME: S3BLAT01.dgn
DRAWING DATE: 7/13/2012

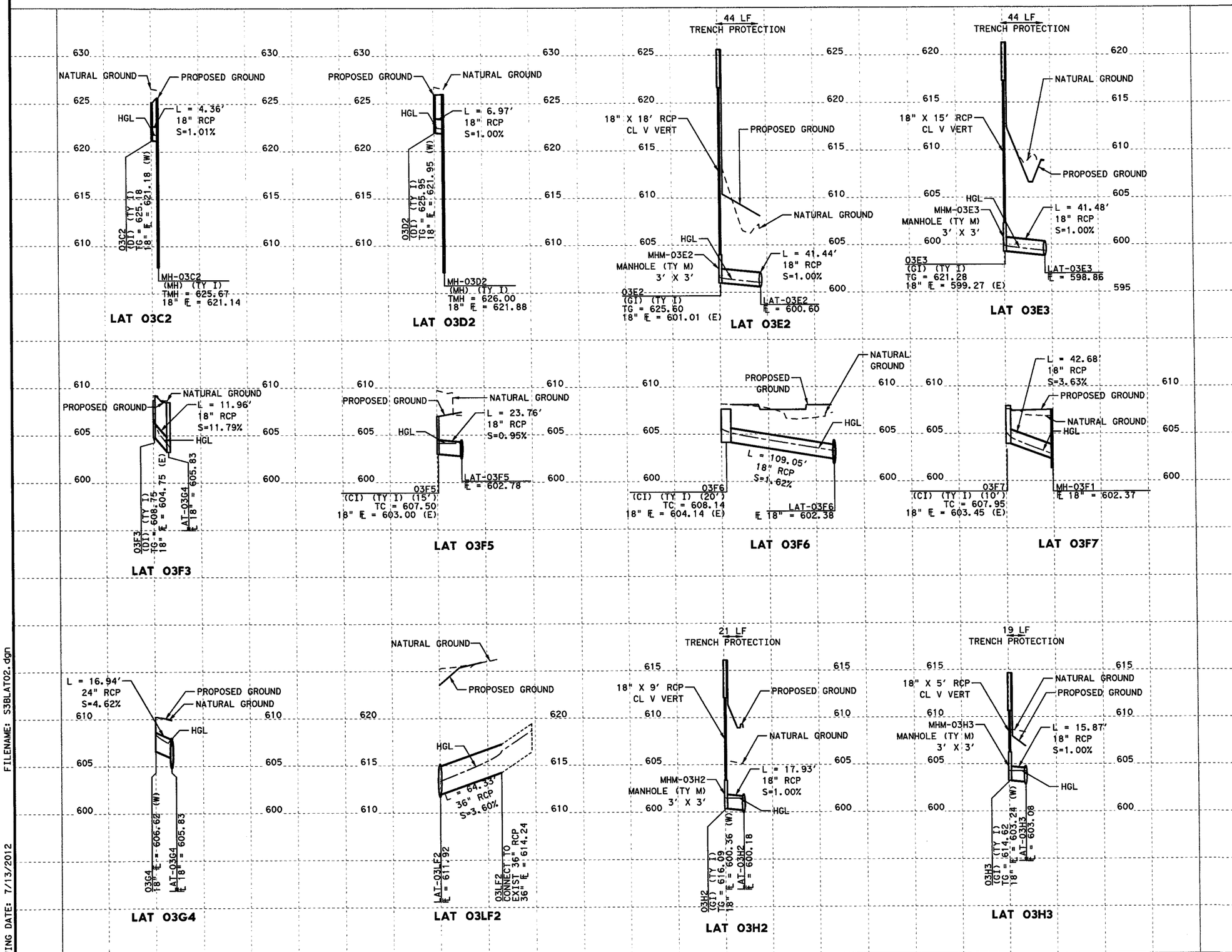

HORZ 0' 25' 50' 100'
VERT 0' 5' 10'
SCALE IN FEET

GENERAL NOTES

1. ALL LOCATIONS FOR CURB INLETS ARE SHOWN TO THE FACE OF CURB.
2. ALL LOCATIONS FOR DITCH INLETS, GRATE INLETS, AND MANHOLES ARE SHOWN TO CENTER POINT (CP) OF INLET BOX OR MANHOLE BOX.
3. REFERENCE ROADWAY PLAN AND PROFILE SHEETS FOR ADDITIONAL INFORMATION.
4. REFERENCE CULVERT PLAN AND PROFILE SHEETS FOR ADDITIONAL INFORMATION.
5. REFERENCE DRIVEWAY DETAIL SHEETS FOR ADDITIONAL INFORMATION.
6. (GI) = GRATE INLET (DI) = DROP INLET
   (CI) = CURB INLET (MH) = MANHOLE
   (TR) = TOP OF RIM (TG) = TOP OF GRATE
   (TC) = TOP OF CURB
   (W/DB) = WITH DITCH BLOCK
7. GEOPAK DRAINAGE WAS USED FOR THE STORM SEWER DESIGN COMPUTATIONS.
8. HGL REFLECTS 10 YR DESIGN STORM.
9. REFER TO CROSS-SECTIONS FOR DITCH INFORMATION.

STATE OF TEXAS
THOMAS E. T. COCHILL
87665
LICENSED
PROFESSIONAL ENGINEER

Thomas E. T. Cochill
7/6/12

CP&Y, INC.
TBPE REGISTRATION NO. F-1741

Texas Department of Transportation
© 2012

IH 35W FROM NORTH TARRANT PKWY TO IH 820

DRAINAGE PROFILES
LATERALS

SCALE: 1" = 100' H, 1" = 10' V — SHEET 10 OF 12

DESIGN	FED. RD. DIV. NO.	FEDERAL AID PROJECT NO.		HIGHWAY NO.
CPY	6	(SEE TITLE SHEET)		IH 35W
GRAPHICS	STATE	DISTRICT	COUNTY	SHEET NO.
CPY	TEXAS	FTW	TARRANT	1280
CHECK	CONTROL	SECTION	JOB	
CPY	0014	16	255, ETC.	
CHECK				
CPY				

FILENAME: S3BLAT02.dgn
DRAWING DATE: 7/13/2012

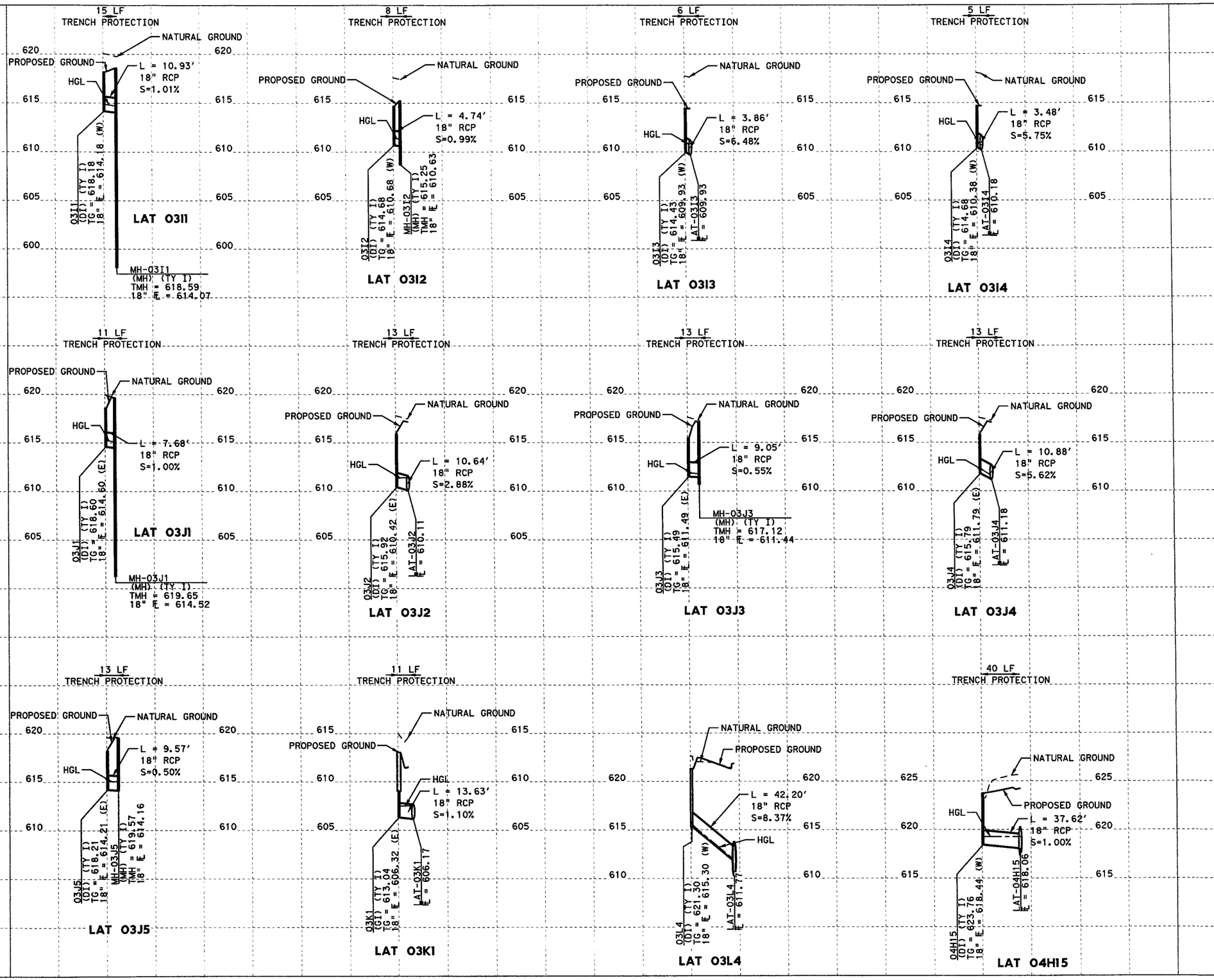

HORZ 0' 25' 50' 100'
VERT 0' 5' 10'
SCALE IN FEET

GENERAL NOTES

1. ALL LOCATIONS FOR CURB INLETS ARE SHOWN TO THE FACE OF CURB.
2. ALL LOCATIONS FOR DITCH INLETS, GRATE INLETS, AND MANHOLES ARE SHOWN TO CENTER POINT (CP) OF INLET BOX OR MANHOLE BOX.
3. REFERENCE ROADWAY PLAN AND PROFILE SHEETS FOR ADDITIONAL INFORMATION.
4. REFERENCE CULVERT PLAN AND PROFILE SHEETS FOR ADDITIONAL INFORMATION.
5. REFERENCE DRIVEWAY DETAIL SHEETS FOR ADDITIONAL INFORMATION.
6. (GI) = GRATE INLET (DI) = DROP INLET
   (CI) = CURB INLET (MH) = MANHOLE
   (TR) = TOP OF RIM (TG) = TOP OF GRATE
   (TC) = TOP OF CURB
   (W/DB) = WITH DITCH BLOCK
7. GEOPAK DRAINAGE WAS USED FOR THE STORM SEWER DESIGN COMPUTATIONS.
8. HGL REFLECTS 10 YR DESIGN STORM.
9. REFER TO CROSS-SECTIONS FOR DITCH INFORMATION.

STATE OF TEXAS
THOMAS E. T. COCHILL
87665
LICENSED
PROFESSIONAL ENGINEER

Thomas E. T. Cochill
7/6/12

CP&Y, INC.
TBPE REGISTRATION NO. F-1741

Texas Department of Transportation
© 2012

IH 35W FROM NORTH TARRANT PKWY TO IH 820

DRAINAGE PROFILES
LATERALS

SCALE: 1" = 100' H, 1" = 10' V — SHEET 11 OF 12

DESIGN	FED. RD. DIV. NO.	FEDERAL AID PROJECT NO.		HIGHWAY NO.
CPY	6	(SEE TITLE SHEET)		IH 35W
GRAPHICS	STATE	DISTRICT	COUNTY	SHEET NO.
CPY	TEXAS	FTW	TARRANT	1281
CHECK	CONTROL	SECTION	JOB	
CPY	0014	16	255, ETC.	

FILENAME: S3BLAT03.dgn
DRAWING DATE: 7/13/2012

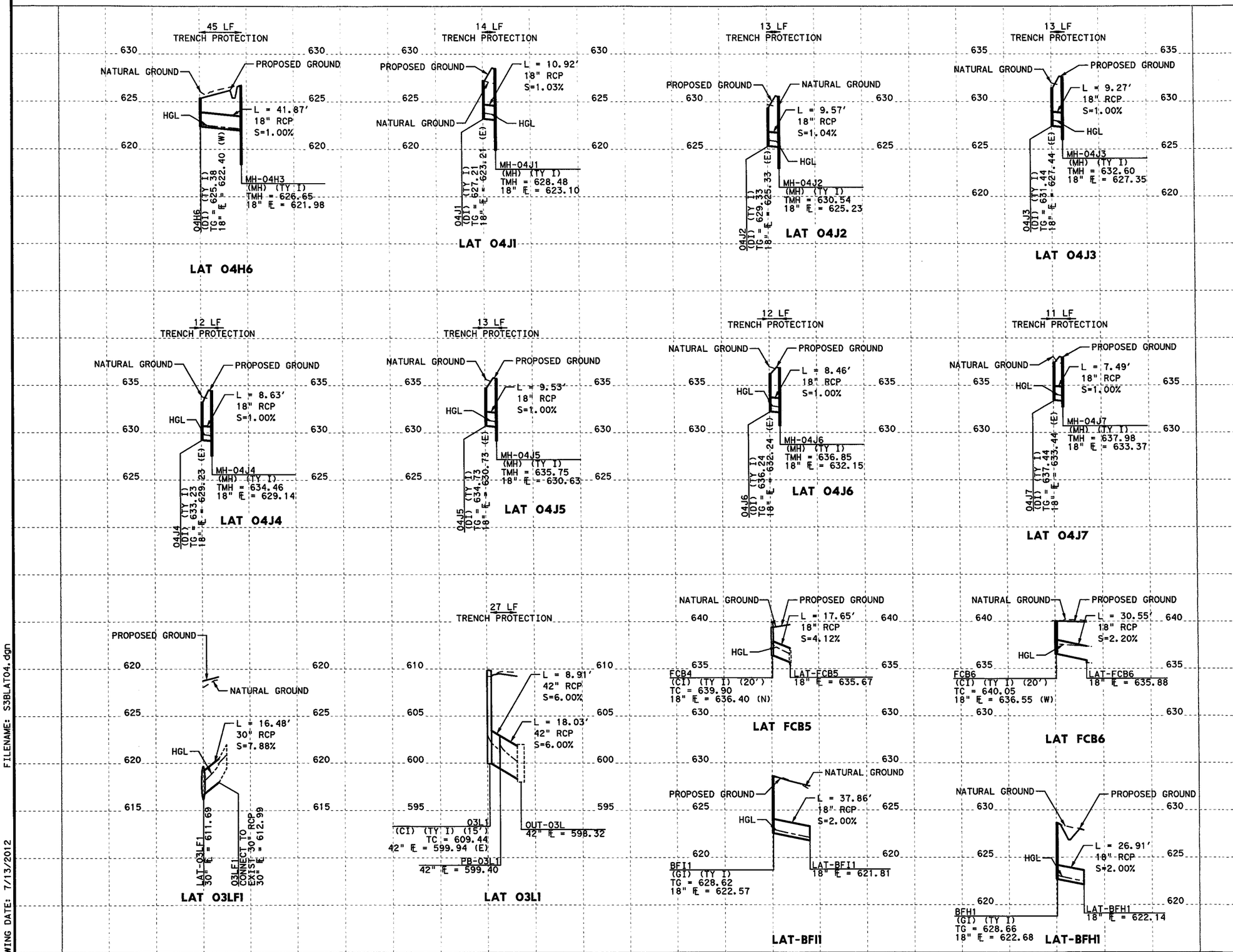

HORZ 0' 25' 50' 100'
VERT 0' 5' 10'
SCALE IN FEET

GENERAL NOTES

1. ALL LOCATIONS FOR CURB INLETS ARE SHOWN TO THE FACE OF CURB.
2. ALL LOCATIONS FOR DITCH INLETS, GRATE INLETS, AND MANHOLES ARE SHOWN TO CENTER POINT (CP) OF INLET BOX OR MANHOLE BOX.
3. REFERENCE ROADWAY PLAN AND PROFILE SHEETS FOR ADDITIONAL INFORMATION.
4. REFERENCE CULVERT PLAN AND PROFILE SHEETS FOR ADDITIONAL INFORMATION.
5. REFERENCE DRIVEWAY DETAIL SHEETS FOR ADDITIONAL INFORMATION.
6. (GI) = GRATE INLET (DI) = DROP INLET
   (CI) = CURB INLET (MH) = MANHOLE
   (TR) = TOP OF RIM (TG) = TOP OF GRATE
   (TC) = TOP OF CURB
   (W/DB) = WITH DITCH BLOCK
7. GEOPAK DRAINAGE WAS USED FOR THE STORM SEWER DESIGN COMPUTATIONS.
8. HGL REFLECTS 10 YR DESIGN STORM.
9. REFER TO CROSS-SECTIONS FOR DITCH INFORMATION.

STATE OF TEXAS
THOMAS E. T. COCHILL
87665
LICENSED
PROFESSIONAL ENGINEER

Thomas E. T. Cochill
7/6/12

CP&Y, INC.
TBPE REGISTRATION NO. F-1741

Texas Department of Transportation
© 2012

IH 35W FROM NORTH TARRANT PKWY TO IH 820

DRAINAGE PROFILES
LATERALS

SCALE: 1" = 100' H, 1" = 10' V — SHEET 12 OF 12

DESIGN	FED. RD. DIV. NO.	FEDERAL AID PROJECT NO.		HIGHWAY NO.
CPY	6	(SEE TITLE SHEET)		IH 35W
GRAPHICS CPY	STATE	DISTRICT	COUNTY	SHEET NO.
CHECK CPY	TEXAS	FTW	TARRANT	1282
CHECK CPY	CONTROL	SECTION	JOB	
	0014	16	255, ETC.	

FILENAME: S3BLAT04.dgn
DRAWING DATE: 7/13/2012

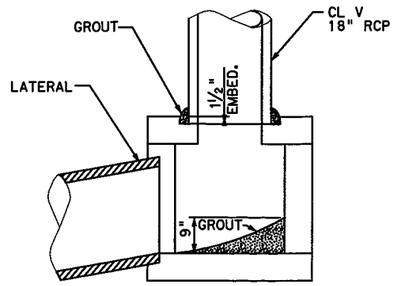

(A) JUNCTION BOX DETAIL
SCALE: N.T.S.

JUNCTION BOX TO BE CONSTRUCTED AS STANDARD TxDOT MH-M WITH THE DIMENSIONS NOTED.

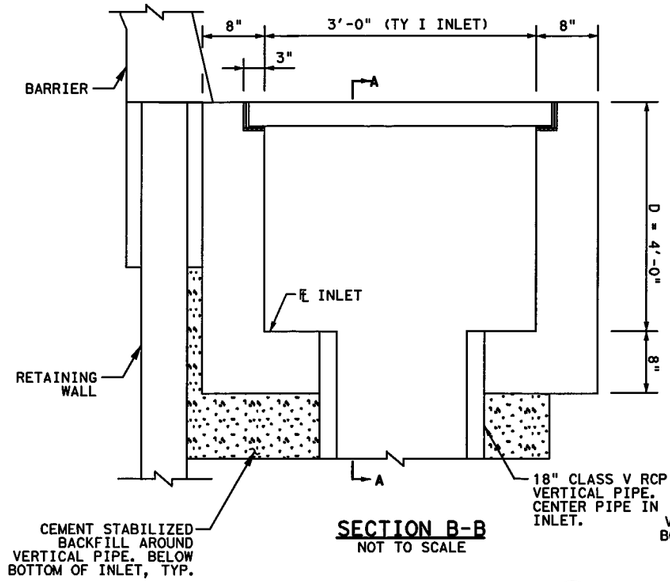

SECTION B-B
NOT TO SCALE

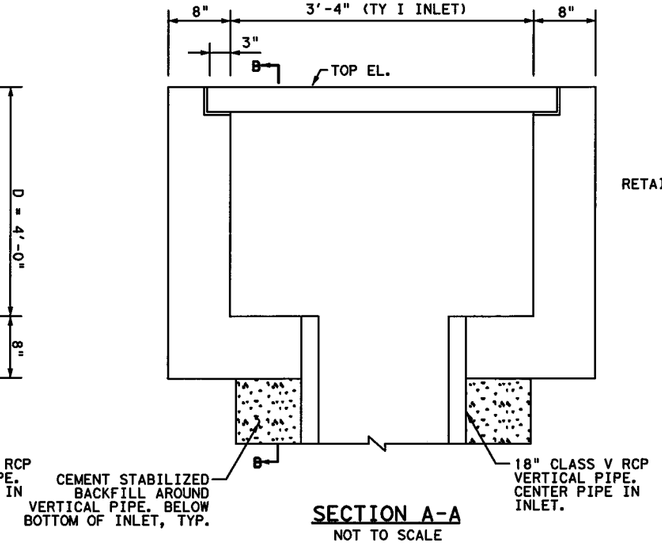

SECTION A-A
NOT TO SCALE

(B) FTW TYPE I GRATE INLETS
VERTICAL PIPE DETAIL
SCALE: N.T.S.

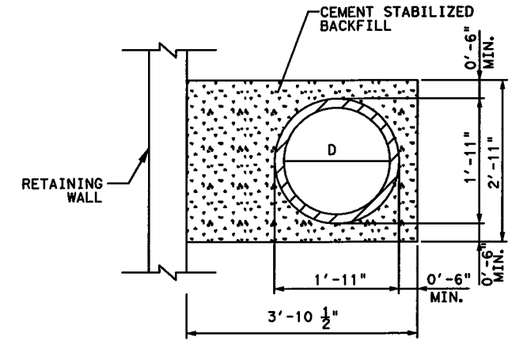

(C) VERTICAL PIPES
SCALE: N.T.S.

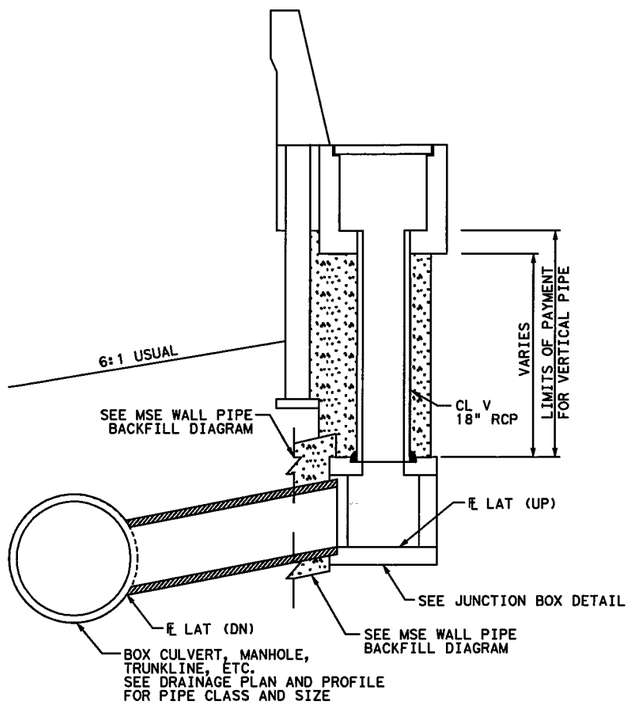

(D) FTW TYPE I GRATE INLETS
VERTICAL PIPE TYPICAL SECTION
SCALE: N.T.S.

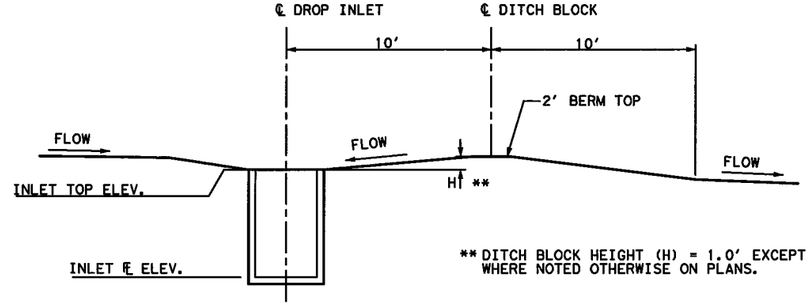

(E) DITCH BLOCK SECTION
SCALE: N.T.S.

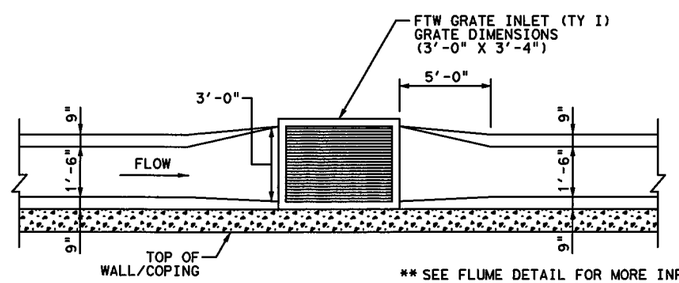

(F) FLUME WIDENING DETAIL
SCALE: N.T.S.

NOTES:

1. SEE GRATE INLET TYPE I DETAILS FOR GRATE CONSTRUCTION AND GENERAL CONSTRUCTION NOTES.

CP&Y, INC.
TBPE REGISTRATION NO. F-1741

Texas Department of Transportation
© 2012

IH 35W FROM NORTH TARRANT PKWY TO IH 820

DRAINAGE DETAILS

MISCELLANEOUS DRAINAGE DETAILS

SHEET 1 OF 2

DESIGN	FED. RD. DIV. NO.	FEDERAL AID PROJECT NO.		HIGHWAY NO.
CPY	6	(SEE TITLE SHEET)		IH 35W
GRAPHICS CPY	STATE	DISTRICT	COUNTY	SHEET NO.
CHECK CPY	TEXAS	FTW	TARRANT	1283
CHECK CPY	CONTROL	SECTION	JOB	
	0014	16	255, ETC.	

FILENAME: misc-det.dgn

DRAWING DATE: 7/13/2012

① APPROX. 2" HMAC, TY. "D"
② APPROX. 10" HMAC BASE, TY. "B"
③ MECHANICALLY TAMPED NATIVE MATERIAL, MAXIMUM LIFT OF 6"

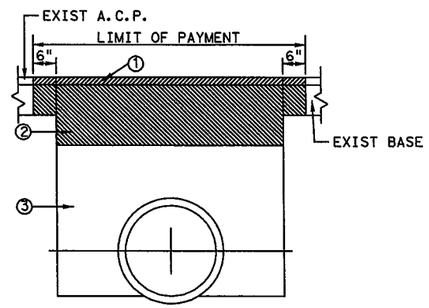

ASPHALT PAVEMENT

① CLASS "A" CONC. PVMT. (TO MATCH EXIST PVMT. DEPTH)
② 8" FLEXIBLE BASE
③ MECHANICALLY TAMPED NATIVE MATERIAL, MAXIMUM LIFT OF 6"
④ 8" WELDED LAP

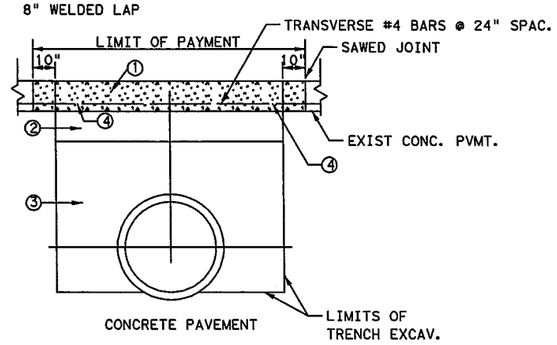

CONCRETE PAVEMENT

(G) CUT AND RESTORE PAVEMENT DETAILS
SCALE: N.T.S.

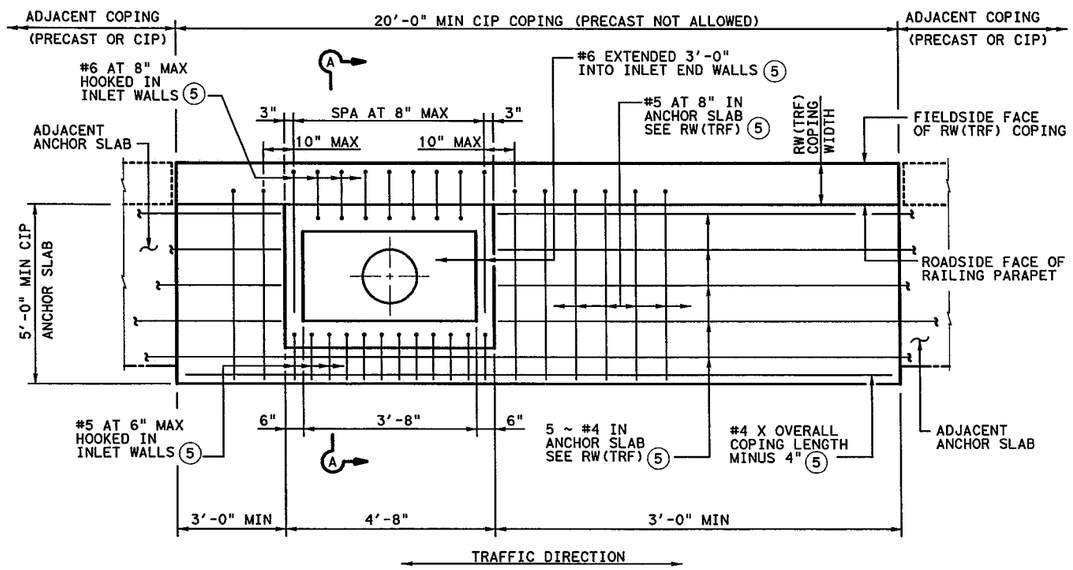

(H) PLAN WITH ANCHOR SLAB (ADJACENT TO ACP)
SCALE: N.T.S.

NOTE: FRAME AND GRATE(S) NOT SHOWN FOR CLARITY

⑤ REINFORCEMENT CONSIDERED PART OF RETAINING WALL COPING AND IS SUBSIDIARY TO ITEM 423, "RETAINING WALLS".

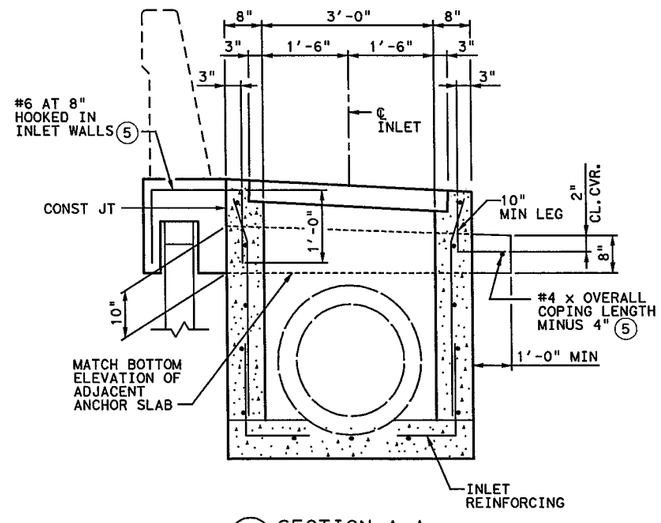

(I) SECTION A-A
SCALE: N.T.S.

ANCHOR SLAB NOTES

1. REFER TO "GI-1-02 (FW)" STANDARD FOR TYPE I INLET DIMENSIONS, REINFORCEMENT, AND DETAILS NOT SHOWN.
2. USE CLASS "C" CONCRETE (f'c = 3,600 PSI) FOR ANCHOR SLAB.
3. ALL REINFORCING STEEL TO BE GRADE 60.

STATE OF TEXAS — THOMAS G. ASHCRAFT — 81411 — REGISTERED PROFESSIONAL ENGINEER
7/5/12

STATE OF TEXAS — THOMAS E. T. COCHILL — 87665 — LICENSED PROFESSIONAL ENGINEER
NOTE: DETAIL G ONLY
7/6/12

CP&Y, INC.
TBPE REGISTRATION NO. F-1741

Texas Department of Transportation
© 2012

IH 35W FROM NORTH TARRANT PKWY TO IH 820

DRAINAGE DETAILS

MISCELLANEOUS DRAINAGE DETAILS

SHEET 2 OF 2

DESIGN	FED. RD. DIV. NO.	FEDERAL AID PROJECT NO.		HIGHWAY NO.
CPY	6	(SEE TITLE SHEET)		IH 35W
GRAPHICS	STATE	DISTRICT	COUNTY	SHEET NO.
CPY	TEXAS	FTW	TARRANT	1284
CHECK	CONTROL	SECTION	JOB	
CPY	0014	16	255, ETC.	

FILENAME: misc-det2.dgn

DRAWING DATE: 7/13/2012

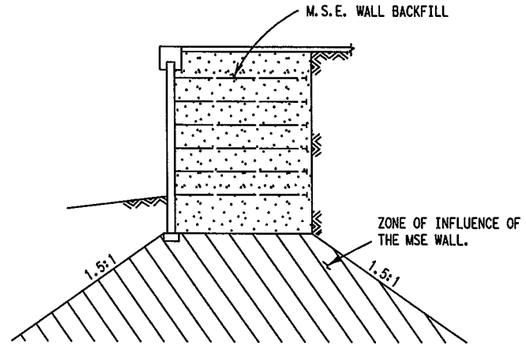

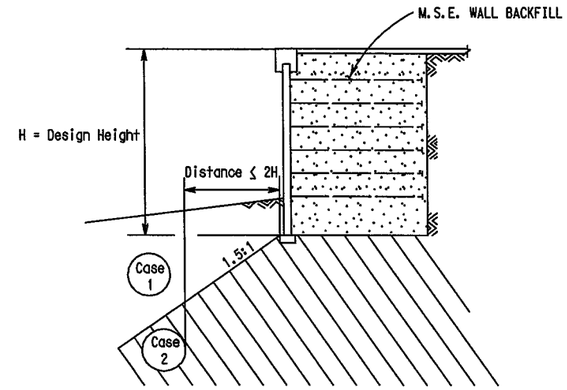

PIPES PARALLEL TO PROPOSED OR EXISTING RETAINING WALLS

CASE 1 When the pipe is located above the 1.5:1 line drawn from the corner of the leveling pad downward into the soil, then special backfill is not required around the pipe.

CASE 2 When the following conditions exist:

a) The distance from the edge of leveling pad to the edge of the pipe is less than or equal to 2 times the height of retaining wall.

b) The pipe is located below the 1.5:1 line drawn from the corner of the leveling pad downward into the soil.

Flowable fill or cement stabilized backfill shall follow the diagrams shown below.

When the distance from the edge of leveling pad to the edge of the pipe is greater than 2 times the height of retaining wall, then no special backfill is required around the pipe.

FOR EXCAVATIONS IN FRONT OF EXISTING WALLS UP TO A DISTANCE OF 2H

The contractor will only excavate the amount of trench necessary for a single day's installation of the drainage pipe. The drainage pipe excavation will be positively braced with a bracing system designed by a registered Engineer in the State of Texas. Shop drawings for bracing will be submitted to the Engineer for approval. Once installed the storm sewer will be backfilled with either flowable fill or cement stabilized backfill.

RETAINING WALLS PLACED IN CUTS AND/OR EMBEDDED INTO EXISTING/NATURAL GROUND

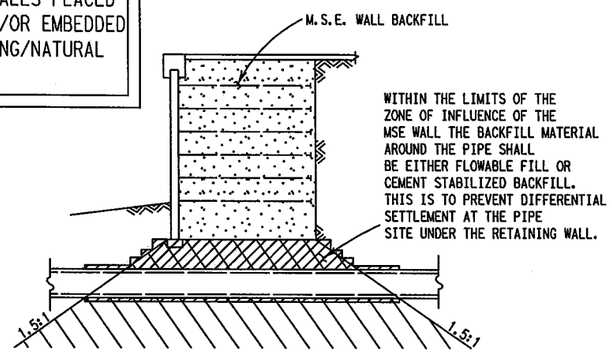

PIPE/CULVERT PERPENDICULAR TO WALL FACE

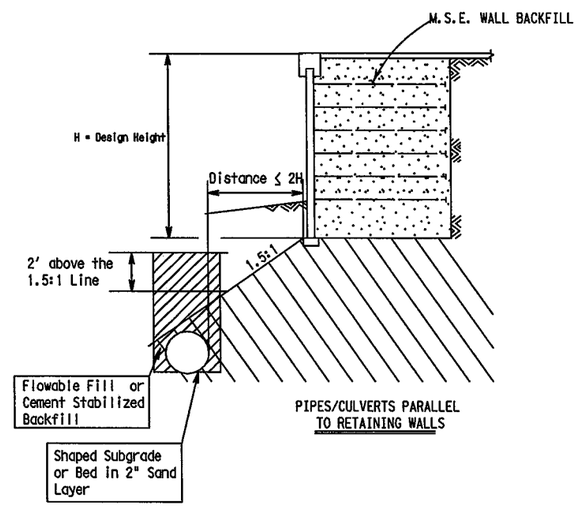

PIPES/CULVERTS PARALLEL TO RETAINING WALLS

GENEAL NOTES:

This sheet may also be used for backfill around utility lines under the direction of the Engineer.

RETAINING WALLS PLACED ON NEW FILL

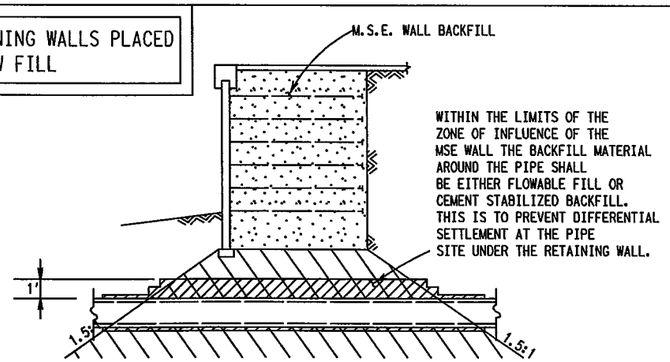

PIPE/CULVERT PERPENDICULAR TO WALL FACE

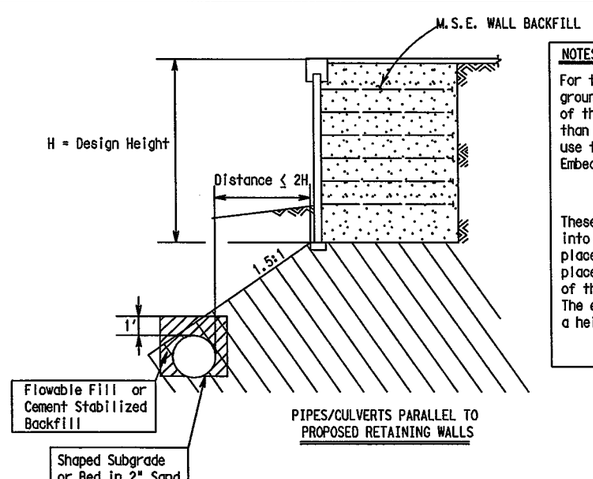

PIPES/CULVERTS PARALLEL TO PROPOSED RETAINING WALLS

NOTES

For this diagram to be applicable the existing or natural ground line must not be greater than 1' above the top of the pipe. If the existing or natural ground is greater than 1' above the top of the pipe then Contractor will use the diagram for "Retaining Walls Placed In Cuts And/Or Embedded Into Existing/Natural Ground".

These diagrams are to be used when the pipe is placed into new fill. Prior to placement of pipe the fill shall be placed to 1' above the top of the pipe. The pipe will then be placed into an excavated trench and backfilled to the top of the trench with flowable fill or cement stabilized backfill. The embankment fill shall then be placed over the pipe to a height to begin construction on the retaining wall.

STATE OF TEXAS
THOMAS G. ASHCRAFT
81411
REGISTERED
PROFESSIONAL ENGINEER

Thomas G. Ashcraft
7/5/12

TEXAS DEPARTMENT OF TRANSPORTATION

MECHANICALLY STABILIZED EARTH WALL PIPE BACKFILL DIAGRAM

ORIGINAL DRAWING DATE:		FED. RD. DIV. NO.	FEDERAL AID PROJECT NO.		SHEET NO.
		6	(SEE TITLE SHEET)		1285
DN: TXDOT	REVISIONS:	STATE	STATE DIST. NO.	COUNTY	
CK: CPY		TEXAS	FTW	TARRANT	
DW: CPY		CONT.	SECT.	JOB	HIGHWAY NO.
CK: CPY		0014	16	255	IH 35W

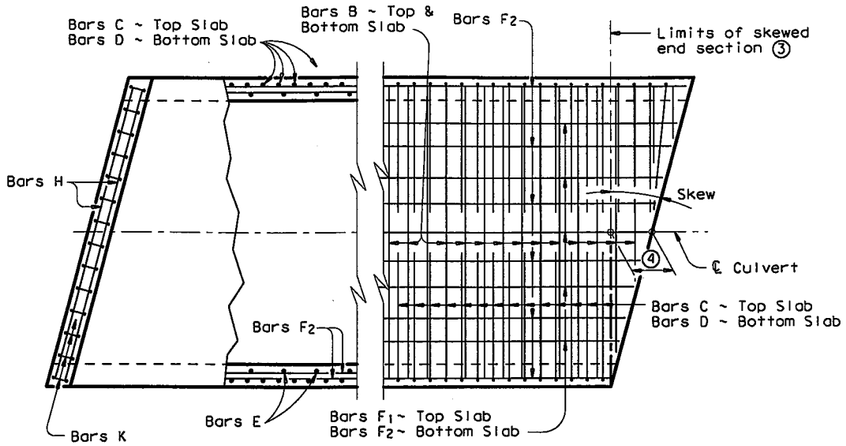

PLAN OF SKEWED ENDS ~ FROM 0° TO 15° ⑦

② When the spacing between Bars B becomes less than half of the normal spacing, bars shall be cut to avoid fouling

③ The length of Bars B and E will vary in the skewed end sections

④ [One half of overall width] x [Tan of the skew angle]

⑤ Bars F_1 and F_2 shall be continuous through the angle section. They shall be bent to remain parallel to the walls of the Box Culvert.

⑥ When necessary to avoid fouling in acute corners, the slab extension leg of Bars C and Bars D may be shortened to a minimum of 1'-6" for skews of 30° and 45°.

⑦ For skews of 15° or less, the contractor has the option of placing Bars B, C and D parallel to the skewed end while maintaining spacing along centerline box. Lengths of Bars B shown on the standards shall be increased to accommodate the skew.

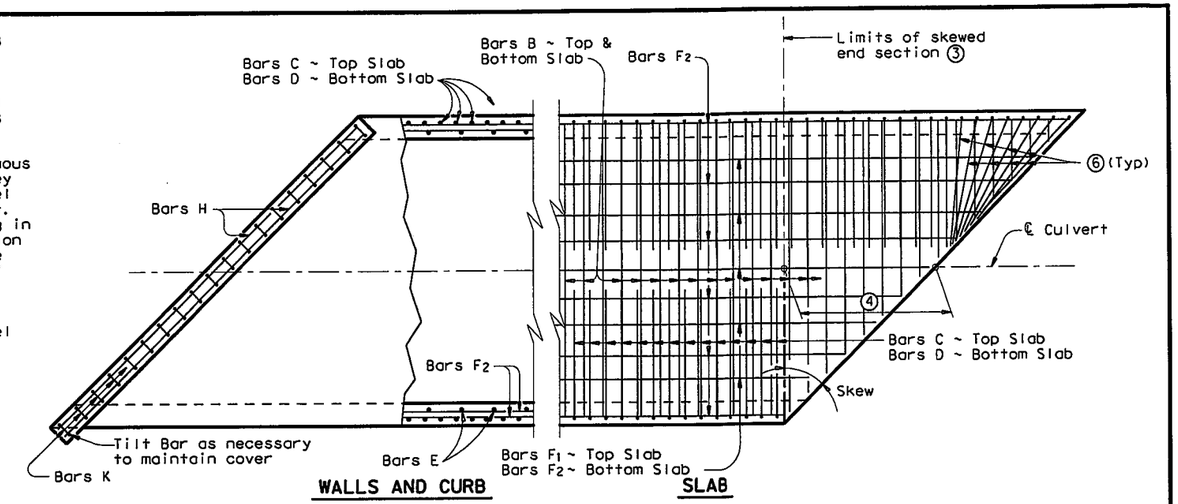

PLAN OF SKEWED ENDS ~ OVER 30° TO 45°

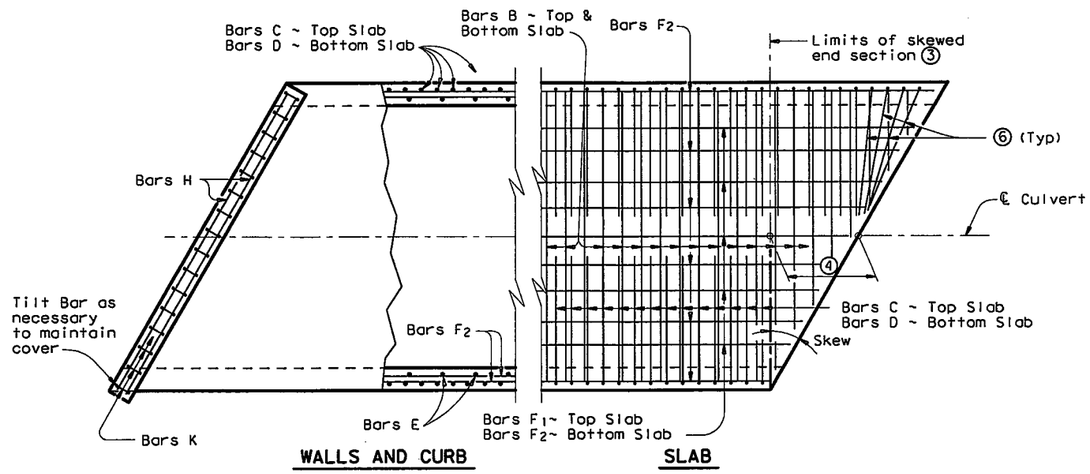

PLAN OF SKEWED ENDS ~ OVER 15° TO 30°

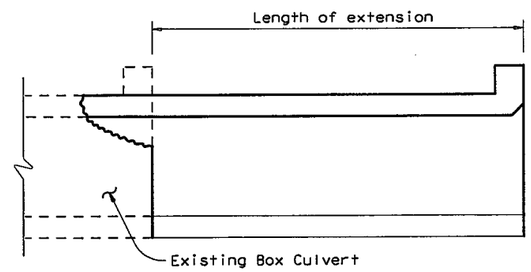

LENGTHENING DETAIL ①

① For box culverts with less than 2'-0" of fill, the top slab shall be broken back to provide a minimum 1'-10" lap of the existing longitudinal bars with the longitudinal bars in the extension. If the depth of fill is 2'-0" or greater, the top slab shall be broken back to provide a 1'-0" minimum embedment of existing longitudinal reinforcing into the extension. Alternatively, if the fill height is greater than 2'-0", the existing curb may be left in place and 2'-0" long #6 bars shall be drilled and grouted 1'-0" into the existing top slab at 1'-6" center to center spacing. Wings and apron shall be broken back as necessary to install the extension. Exposed wingwall and apron reinforcing may be removed or cleaned and included in the extension. When lengthening existing box culverts with dimensions different than current standard dimensions, horizontal and vertical transitions shall be formed as directed by the Engineer. Bottom slabs shall match to maintain an uninterrupted flow line. Existing and new reinforcing shall be field bent into transition maintaining specified cover requirements.

GENERAL NOTES:

Designed according to AASHTO LRFD Specifications.

All reinforcing steel shall be Grade 60.

All concrete shall be Class "C" with these exceptions: use Class "S" for top slabs of culverts with overlay, with 1-to-2 course surface treatment, or with the top slab as the final riding surface.

Class "C" concrete shall have a minimum compressive strength of 3,600 psi. Class "S" concrete shall have a minimum compressive strength of 4,000 psi.

The use of permanent forms is not allowed.

Refer to Single Box Culverts Cast-in-Place standard for details of straight sections of culvert. For skewed sections and angle sections refer to Single Box Culverts Cast-in-Place standard for slab and wall dimensions, bar sizes, maximum bar spacing, and any other details not shown. For Skewed ends with curbs, adjust length of Bars H, number of Bars K, curb concrete volume and reinforcing steel weight by dividing the values shown on the culvert standards by the cosine of the skew angle.

Laps for Bars H, when required, shall be 1'-9" for uncoated bars and 2'-7" for epoxy coated.

HL93 LOADING

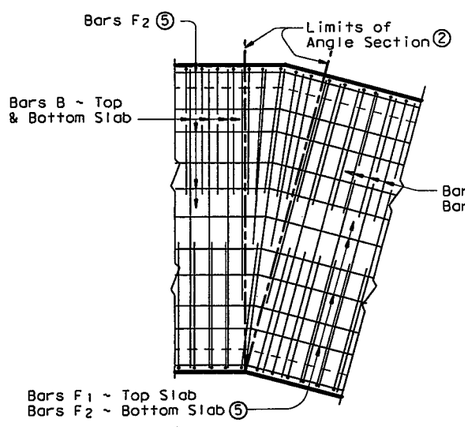

PLAN OF ANGLE SECTION ~ FROM 0° TO 15°

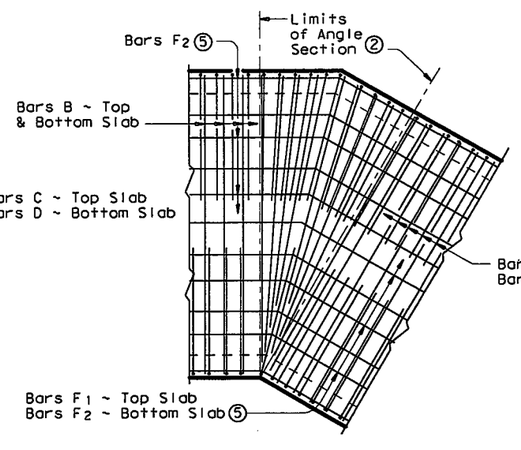

PLAN OF ANGLE SECTION ~ OVER 15° TO 30°

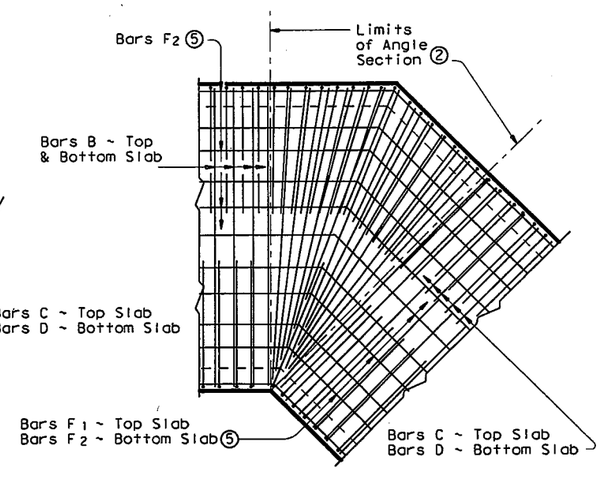

PLAN OF ANGLE SECTION ~ OVER 30° TO 45°

Texas Department of Transportation
Bridge Division

SINGLE BOX CULVERTS CAST-IN-PLACE MISCELLANEOUS DETAILS

SCC-MD

FILE: sccmdste.dgn	ON: GAF	CK: LMW	DW: BWH/TxDOT	CK: GAF	
© TxDOT February 2010	DISTRICT	FEDERAL AID PROJECT			SHEET
REVISIONS	FTW	(SEE TITLE SHEET)			1286
	COUNTY		CONTROL	SECT	JOB	HIGHWAY
	TARRANT		0014	16	255, ETC.	IH 35W

DISCLAIMER:
The use of this standard is governed by the "Texas Engineering Practice Act". No warranty of any kind is made by TxDOT for any purpose whatsoever. TxDOT assumes no responsibility for the conversion of this standard to other formats or for incorrect results or damages resulting from its use.

ACC:

LEVELS DISPLAYED

BILLS OF REINFORCING STEEL (For Box Length = 40 feet)

SECTION DIMENSIONS S	H	T	U	FILL HEIGHT ⑤	Bars B No.	Size	Spa	Length	Weight	Bars C No.	Size	Spa	Length	Weight	"X"	"Y"
7'-0"	3'-0"	7"	7"	16'	162	#6	6"	7'-11"	1,926	194	#5	5"	6'-11"	1,400	3'- 5"	3'- 6"
7'-0"	3'-0"	8"	7"	20'	162	#6	6"	7'-11"	1,926	194	#5	5"	7'- 0"	1,416	3'- 6"	3'- 6"
7'-0"	3'-0"	9"	8"	23'	162	#6	6"	8'- 1"	1,967	194	#5	5"	7'- 1"	1,433	3'- 7"	3'- 6"
7'-0"	3'-0"	10"	8"	30'	194	#6	5"	8'- 1"	2,355	194	#5	5"	7'- 2"	1,450	3'- 8"	3'- 6"
7'-0"	4'-0"	7"	7"	16'	162	#6	6"	7'-11"	1,926	162	#5	6"	7'-11"	1,338	4'- 5"	3'- 6"
7'-0"	4'-0"	8"	7"	20'	194	#6	5"	7'-11"	2,307	162	#5	6"	8'- 0"	1,352	4'- 6"	3'- 6"
7'-0"	4'-0"	9"	8"	23'	194	#6	5"	8'- 1"	2,355	162	#5	6"	8'- 1"	1,366	4'- 7"	3'- 6"
7'-0"	4'-0"	10"	8"	30'	194	#6	5"	8'- 1"	2,355	194	#5	5"	8'- 2"	1,652	4'- 8"	3'- 6"
7'-0"	5'-0"	7"	7"	16'	162	#6	6"	7'-11"	1,926	162	#5	6"	8'-11"	1,507	5'- 5"	3'- 6"
7'-0"	5'-0"	8"	7"	20'	194	#6	5"	7'-11"	2,307	162	#5	6"	9'- 0"	1,521	5'- 6"	3'- 6"
7'-0"	5'-0"	9"	8"	23'	194	#6	5"	8'- 1"	2,355	162	#5	6"	9'- 1"	1,535	5'- 7"	3'- 6"
7'-0"	5'-0"	10"	8"	30'	194	#6	5"	8'- 1"	2,355	194	#5	5"	9'- 2"	1,855	5'- 8"	3'- 6"
7'-0"	6'-0"	7"	7"	16'	194	#6	5"	7'-11"	2,307	162	#5	6"	9'-11"	1,676	6'- 5"	3'- 6"
7'-0"	6'-0"	8"	7"	20'	194	#6	5"	7'-11"	2,307	162	#5	6"	10'- 0"	1,690	6'- 6"	3'- 6"
7'-0"	6'-0"	9"	8"	23'	194	#6	5"	8'- 1"	2,355	162	#5	6"	10'- 1"	1,704	6'- 7"	3'- 6"
7'-0"	6'-0"	10"	8"	30'	194	#6	5"	8'- 1"	2,355	194	#5	5"	10'- 2"	2,057	6'- 8"	3'- 6"
7'-0"	7'-0"	7"	7"	16'	194	#6	5"	7'-11"	2,307	162	#5	6"	10'-11"	1,845	7'- 5"	3'- 6"
7'-0"	7'-0"	8"	7"	20'	194	#6	5"	7'-11"	2,307	194	#5	5"	11'- 0"	2,226	7'- 6"	3'- 6"
7'-0"	7'-0"	9"	8"	23'	194	#6	5"	8'- 1"	2,355	162	#5	6"	11'- 1"	1,873	7'- 7"	3'- 6"
7'-0"	7'-0"	10"	8"	30'	194	#6	5"	8'- 1"	2,355	194	#5	5"	11'- 2"	2,259	7'- 8"	3'- 6"

FILL HEIGHT ⑤	Bars D No.	Size	Spa	Length	Weight	"Y"	"Z"	Bars E~#4 at 18" Max No.	Length	Wt	Bars F_1 ~#4 No.	Spa	Length	Wt	Bars F_2~#4 at 18" Max No.	Length	Wt	Bars H 4~#4 Length	Wt	Bars K No.	Wt
16'	194	#5	5"	6'- 1"	1,231	3'- 6"	2'- 7"	56	3'-0"	112	12	7"	39'-9"	319	31	39'-9"	823	7'-11"	21	18	51
20'	194	#5	5"	6'- 2"	1,248	3'- 6"	2'- 8"	56	3'-0"	112	5	18"	39'-9"	133	31	39'-9"	823	7'-11"	21	18	51
23'	194	#5	5"	6'- 3"	1,265	3'- 6"	2'- 9"	56	3'-0"	112	5	18"	39'-9"	133	31	39'-9"	823	8'- 1"	22	20	57
30'	194	#5	5"	6'- 4"	1,281	3'- 6"	2'-10"	56	3'-0"	112	5	18"	39'-9"	133	31	39'-9"	823	8'- 1"	22	20	57
16'	162	#5	6"	6'- 1"	1,028	3'- 6"	2'- 7"	56	4'-0"	150	12	7"	39'-9"	319	31	39'-9"	823	7'-11"	21	18	51
20'	162	#5	6"	6'- 2"	1,042	3'- 6"	2'- 8"	56	4'-0"	150	5	18"	39'-9"	133	31	39'-9"	823	7'-11"	21	18	51
23'	162	#5	6"	6'- 3"	1,056	3'- 6"	2'- 9"	56	4'-0"	150	5	18"	39'-9"	133	31	39'-9"	823	8'- 1"	22	20	57
30'	194	#5	5"	6'- 4"	1,281	3'- 6"	2'-10"	56	4'-0"	150	5	18"	39'-9"	133	31	39'-9"	823	8'- 1"	22	20	57
16'	162	#5	6"	6'- 1"	1,028	3'- 6"	2'- 7"	56	5'-0"	187	12	7"	39'-9"	319	35	39'-9"	929	7'-11"	21	18	51
20'	162	#5	6"	6'- 2"	1,042	3'- 6"	2'- 8"	56	5'-0"	187	5	18"	39'-9"	133	35	39'-9"	929	7'-11"	21	18	51
23'	162	#5	6"	6'- 3"	1,056	3'- 6"	2'- 9"	56	5'-0"	187	5	18"	39'-9"	133	35	39'-9"	929	8'- 1"	22	20	57
30'	194	#5	5"	6'- 4"	1,281	3'- 6"	2'-10"	56	5'-0"	187	5	18"	39'-9"	133	35	39'-9"	929	8'- 1"	22	20	57
16'	162	#5	6"	6'- 1"	1,028	3'- 6"	2'- 7"	56	6'-0"	224	12	7"	39'-9"	319	39	39'-9"	1,036	7'-11"	21	18	51
20'	162	#5	6"	6'- 2"	1,042	3'- 6"	2'- 8"	56	6'-0"	224	5	18"	39'-9"	133	39	39'-9"	1,036	7'-11"	21	18	51
23'	162	#5	6"	6'- 3"	1,056	3'- 6"	2'- 9"	56	6'-0"	224	5	18"	39'-9"	133	39	39'-9"	1,036	8'- 1"	22	20	57
30'	194	#5	5"	6'- 4"	1,281	3'- 6"	2'-10"	56	6'-0"	224	5	18"	39'-9"	133	39	39'-9"	1,036	8'- 1"	22	20	57
16'	162	#5	6"	6'- 1"	1,028	3'- 6"	2'- 7"	56	7'-0"	262	12	7"	39'-9"	319	39	39'-9"	1,036	7'-11"	21	18	51
20'	194	#5	5"	6'- 2"	1,248	3'- 6"	2'- 8"	56	7'-0"	262	5	18"	39'-9"	133	39	39'-9"	1,036	7'-11"	21	18	51
23'	162	#5	6"	6'- 3"	1,056	3'- 6"	2'- 9"	56	7'-0"	262	5	18"	39'-9"	133	39	39'-9"	1,036	8'- 1"	22	20	57
30'	194	#5	5"	6'- 4"	1,281	3'- 6"	2'-10"	56	7'-0"	262	5	18"	39'-9"	133	39	39'-9"	1,036	8'- 1"	22	20	57

QUANTITIES

Per foot of Barrel Conc (CY)	Reinf (Lb)	Curb Conc (CY)	Reinf (Lb)	Total Conc (CY)	Reinf (Lb)
0.483	145.3	0.6	72	19.9	5,883
0.533	141.5	0.6	72	21.9	5,730
0.611	143.3	0.6	79	25.0	5,812
0.663	153.9	0.6	79	27.1	6,233
0.526	139.6	0.6	72	21.6	5,656
0.576	145.2	0.6	72	23.6	5,879
0.660	147.1	0.6	79	27.0	5,962
0.712	159.9	0.6	79	29.1	6,473
0.569	147.4	0.6	72	23.4	5,968
0.619	153.0	0.6	72	25.4	6,191
0.710	154.9	0.6	79	29.0	6,274
0.761	168.5	0.6	79	31.0	6,819
0.612	164.8	0.6	72	25.1	6,662
0.663	160.8	0.6	72	27.1	6,504
0.759	162.7	0.6	79	31.0	6,587
0.811	177.2	0.6	79	33.0	7,165
0.655	169.9	0.6	72	26.8	6,869
0.706	180.3	0.6	72	28.8	7,284
0.809	167.9	0.6	79	33.0	6,794
0.860	183.2	0.6	79	35.0	7,405

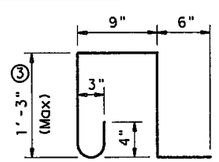

BARS K ~ #4
(Spa = 1'-0" Max)
(Length = 4'-3")

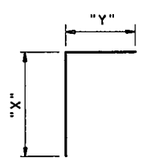

BARS C

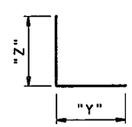

BARS D

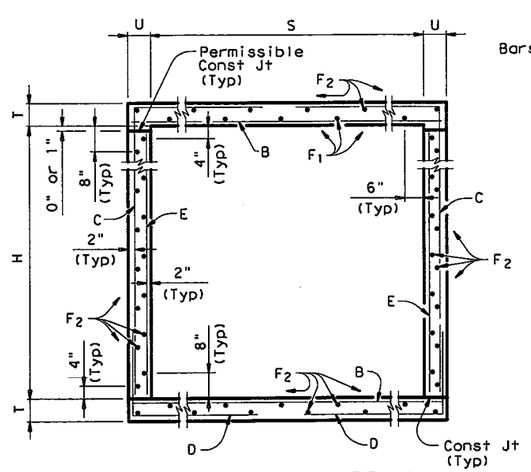

TYPICAL SECTION

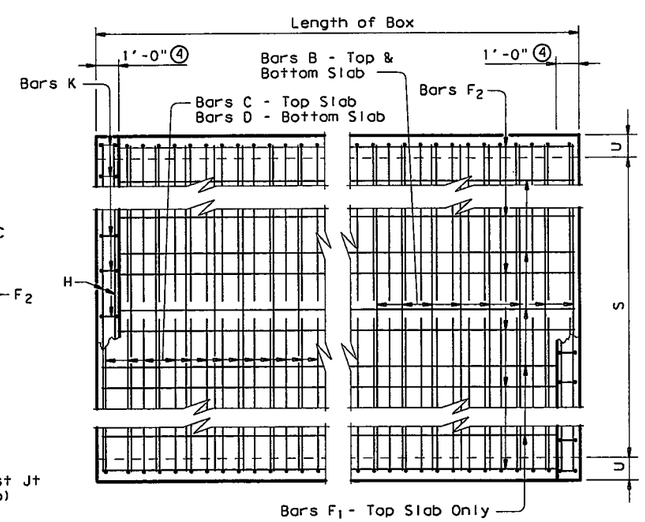

PLAN OF REINF STEEL

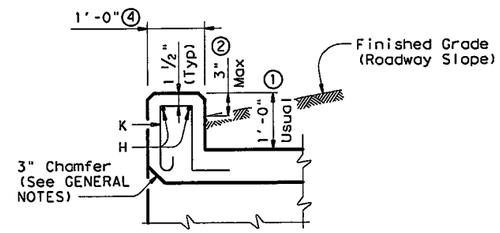

SECTION THRU CURB

① 0" min to 5'-0" max. Estimated curb heights are shown elsewhere in the plans. For structures with pedestrian rail, bicycle rail or curbs taller than 1'-0", refer to ECD standard. For structures with T6 bridge rail, refer to T6-CM standard. For structures with traffic rail, other than T6, refer to RAC standard.

② For vehicle safety, the following requirements must be met:
- For structures without bridge rail, curbs shall project no more than 3" above finished grade.
- For structures with bridge rail, curbs shall be flush with finished grade.

Curb heights shall be reduced, if necessary, to meet the above requirements. No changes will be made in quantities and no additional compensation will be allowed for this work.

③ For curbs less than 1'-0" high, tilt bars K or reduce bar height as necessary to maintain cover. For curbs less than 3" high, bars K may be omitted.

④ 1'-0" typical. 2'-0" when RAC standard is referred to elsewhere in the plans.

⑤ For each box size, minimum fill height shown shall be used for all culverts with less than 2'-0" of fill.

GENERAL NOTES:

Designed according to AASHTO LRFD Specifications.
Designed to the maximum fill heights shown.
All reinforcing steel shall be Grade 60.
All concrete shall be Class "C" with these exceptions: use Class "S" for top slabs of culverts with overlay, with 1-to-2 course surface treatment, or with the top slab as the final riding surface.
Class "C" concrete shall have a minimum compressive strength of 3,600 psi. Class "S" concrete shall have a minimum compressive strength of 4,000 psi.
The use of permanent forms is not allowed.
Reinforcing bars shall be adjusted to provide a minimum of 1 1/4 inches clear cover.
The bottom edge of the top slab shall be chamfered 3 inches at the entrance.
Construction joints shown at the flow line may be raised a maximum of 6 inches at the Contractor's option. If this option is used, Bars E may be cut off or raised, and Bars C and D may be reversed.
See Standard SCC-MD for skewed ends, angle sections and lengthening details.

HL93 LOADING

Texas Department of Transportation
Bridge Division

SINGLE BOX CULVERTS CAST-IN-PLACE 0' TO 30' FILL

SCC-7

FILE: scc07ste.dgn	DN: GAF	CK: LMW	DW: BWH/TxDOT	CK: GAF	
©TxDOT February 2010	DISTRICT	FEDERAL AID PROJECT			SHEET
REVISIONS	FTW	(SEE TITLE SHEET)			1287
	COUNTY		CONTROL	SECT	JOB	HIGHWAY
	TARRANT		0014	16	255, ETC.	IH 35W

DISCLAIMER:
The use of this standard is governed by the "Texas Engineering Practice Act". No warranty of any kind is made by TxDOT for any purpose whatsoever. TxDOT assumes no responsibility for the conversion of this standard to other formats or for incorrect results or damages resulting from its use.

ACC:
LEVELS DISPLAYED
1

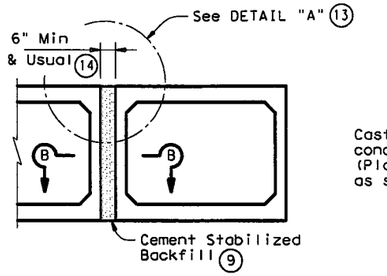

MULTIPLE UNIT PLACEMENT

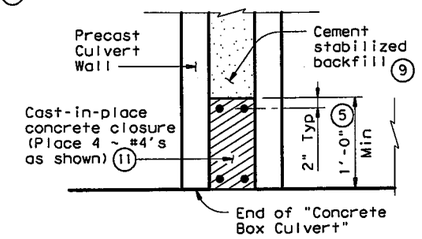

SECTION B-B

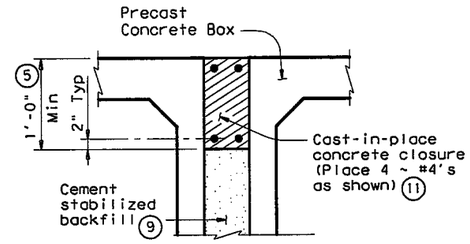

DETAIL "A" (13)

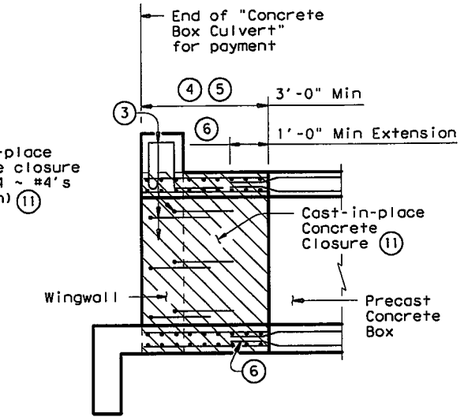

WINGWALL CONNECTION

(Also applies to Safety End Treatment)

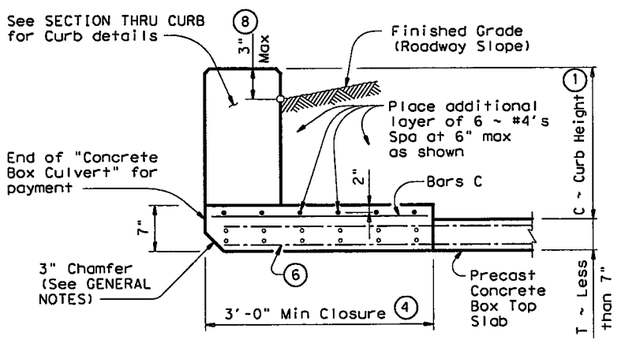

SECTION THRU TOP SLABS LESS THAN 7"

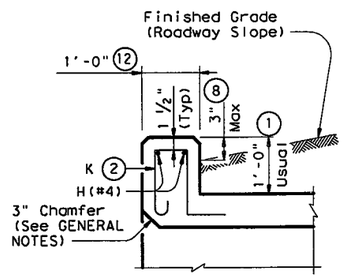

SECTION THRU CURB

(10) QUANTITIES PER FOOT OF CURB	
Reinforcing Steel	4.18 Lb
Concrete	0.037 CY

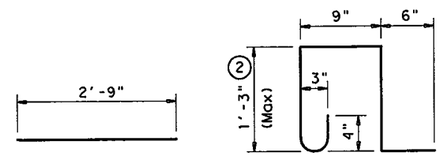

BARS C ~ #4
(Spa = 1'-0" Max)

BARS K ~ #4
(Spa = 1'-0" Max)
(Length = 4'-3")

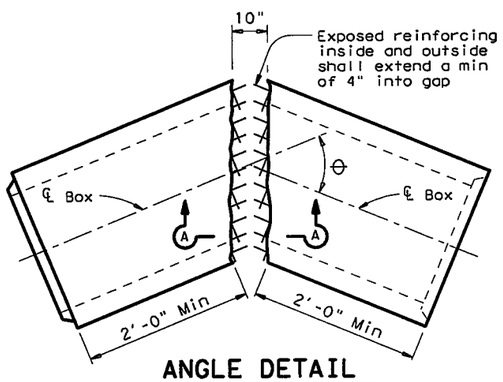

ANGLE DETAIL

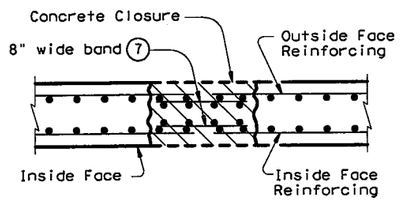

SECTION A-A

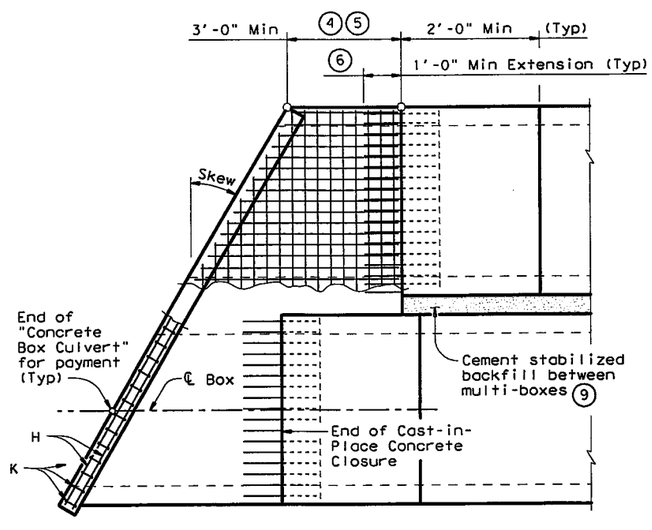

PLAN OF SKEWED ENDS

(Showing multi-box placement)

(1) 0" min to 5'-0" max. Estimated curb heights are shown elsewhere in the plans. For structures with pedestrian rail, bicycle rail or curbs taller than 1'-0", refer to ECD standard. For structures with T6 traffic rail, refer to T6-CM standard. For structures with traffic rail, other than T6, refer to RAC standard.

(2) For curbs less than 1'-0" high, tilt Bars K or reduce bar height as necessary to maintain cover. For curbs less than 3" high, Bars K may be omitted.

(3) Curb, Wingwall or Safety End Treatment reinforcing shall extend into concrete closure. Any reinforcing that does not fit into the closure shall be bent or trimmed as necessary.

(4) Cast-in-place concrete closure shall be 3'-0" min. Boxes shall be cast short or broken back in the field. All reinforcing in the closure shall be the same size and spacing as in the precast box section. Except where shown otherwise, the cast-in-place closure shall be flush with the inside and outside faces of the precast box section.

(5) For multiple unit placements the length of the closure for the interior walls may be adjusted as necessary. The length of the top slab, bottom slab, and exterior wall closure shall not be less than 3'-0". See Section B-B detail when interior walls are cast full length.

(6) Precast box reinforcing shall extend a minimum of 1'-0" into concrete closure (Typ).

(7) Bands of reinforcing matching the inside and outside face reinforcing shall be placed in the gaps of the top and bottom slabs. A band matching the outside face reinforcing of the wall shall be placed in the gaps of the walls (placed in the outside face only). The bands shall be tack welded to the exposed reinforcing at each point of contact.

(8) For vehicle safety, the following requirements must be met:
- For structures without bridge rail, curbs shall project no more than 3" above finished grade.
- For structures with bridge rail, curbs shall be flush with finished grade.

Curb heights shall be reduced, if necessary, to meet the above requirements. No changes will be made in quantities and no additional compensation will be allowed for this work.

(9) Cement Stabilized Backfill between boxes is considered part of the Box Culvert for payment.

(10) All curb concrete and reinforcing is considered part of the Box Culvert for payment.

(11) Any additional concrete and reinforcing required for the closures shall be considered as subsidiary to the Concrete Box Culvert.

(12) 1'-0" typical. 2'-0" when RAC standard is referred to elsewhere in the plans.

(13) For multiple unit placement with overlay, with 1 to 2 course surface treatment, or with the top slab as the final riding surface, provide wall closure as shown in DETAIL "A".

(14) This dimension may be increased with approval of the Engineer to allow the precast boxes to be tunneled or jacked in accordance with Item 476, "Jacking, Boring, or Tunneling Pipe or Box". No payment will be made for any additional material in the gap between adjacent boxes.

GENERAL NOTES:

Designed according to AASHTO LRFD Specifications.

All closure concrete shall be Class "C" with a minimum compressive strength of 3600 psi and shall be placed according to the Item, "Concrete Structures".

Any additional concrete required for the closures shall be considered as subsidiary to the Concrete Box Culvert.

Refer to the Single Box Culverts Precast standard for details not shown.

The bottom edge of the top slab closure shall be chamfered 3 inches at the entrance.

HL93 LOADING

Texas Department of Transportation
Bridge Division

BOX CULVERTS PRECAST MISCELLANEOUS DETAILS

SCP-MD

FILE: scpmdste.dgn	DN: GAF	CK: LMW	DW: BWH/TxDOT	CK: GAF	
© TxDOT February 2010	DISTRICT	FEDERAL AID PROJECT			SHEET
REVISIONS	FTW	(SEE TITLE SHEET)			1288
	COUNTY		CONTROL	SECT	JOB	HIGHWAY
	TARRANT		0014	16	255, ETC.	IH 35W

DISCLAIMER:
The use of this standard is governed by the "Texas Engineering Practice Act". No warranty of any kind is made by TxDOT for any purpose whatsoever. TxDOT assumes no responsibility for the conversion of this standard to other formats or for incorrect results or damages resulting from its use.

ACC:

LEVELS DISPLAYED

BOX DATA

SECTION DIMENSIONS S (ft)	H (ft)	T_T (in)	T_B (in)	T_S (in)	Fill Height (ft)	M (Min) (in)	REINFORCING (in^2/ft) ② A_{S1}	A_{S2}	A_{S3}	A_{S4}	A_{S5}	A_{S6}	A_{S7}	A_{S8}	① Lift Weight (Tons)
7	4	8	8	8	<2	-	0.21	0.34	0.25	0.19	0.19	0.19	0.19	0.19	10.4
7	4	8	8	8	2<3	43	0.23	0.28	0.28	0.19	-	-	-	-	10.4
7	4	8	8	8	3-5	43	0.19	0.22	0.19	0.19	-	-	-	-	10.4
7	4	8	8	8	10	43	0.19	0.23	0.23	0.19	-	-	-	-	10.4
7	4	8	8	8	15	41	0.24	0.30	0.30	0.19	-	-	-	-	10.4
7	4	8	8	8	20	41	0.31	0.38	0.39	0.19	-	-	-	-	10.4
7	4	8	8	8	25	41	0.38	0.47	0.48	0.19	-	-	-	-	10.4
7	4	8	8	8	30	41	0.46	0.57	0.57	0.19	-	-	-	-	10.4
7	5	8	8	8	<2	-	0.19	0.36	0.27	0.19	0.19	0.19	0.19	0.19	11.2
7	5	8	8	8	2<3	47	0.21	0.31	0.31	0.19	-	-	-	-	11.2
7	5	8	8	8	3-5	43	0.19	0.24	0.21	0.19	-	-	-	-	11.2
7	5	8	8	8	10	43	0.19	0.25	0.26	0.19	-	-	-	-	11.2
7	5	8	8	8	15	41	0.21	0.32	0.33	0.19	-	-	-	-	11.2
7	5	8	8	8	20	41	0.27	0.41	0.42	0.19	-	-	-	-	11.2
7	5	8	8	8	25	41	0.33	0.51	0.52	0.19	-	-	-	-	11.2
7	5	8	8	8	30	41	0.40	0.61	0.62	0.19	-	-	-	-	11.2
7	6	8	8	8	<2	-	0.19	0.38	0.30	0.19	0.19	0.19	0.19	0.19	12.0
7	6	8	8	8	2<3	59	0.19	0.33	0.34	0.19	-	-	-	-	12.0
7	6	8	8	8	3-5	47	0.19	0.25	0.23	0.19	-	-	-	-	12.0
7	6	8	8	8	10	43	0.19	0.26	0.27	0.19	-	-	-	-	12.0
7	6	8	8	8	15	41	0.19	0.34	0.35	0.19	-	-	-	-	12.0
7	6	8	8	8	20	41	0.24	0.43	0.45	0.19	-	-	-	-	12.0
7	6	8	8	8	25	41	0.29	0.53	0.55	0.19	-	-	-	-	12.0
7	6	8	8	8	30	41	0.35	0.64	0.65	0.19	-	-	-	-	12.0
7	7	8	8	8	<2	-	0.19	0.40	0.33	0.19	0.19	0.19	0.19	0.19	12.8
7	7	8	8	8	2<3	59	0.19	0.36	0.37	0.19	-	-	-	-	12.8
7	7	8	8	8	3-5	59	0.19	0.27	0.25	0.19	-	-	-	-	12.8
7	7	8	8	8	10	47	0.19	0.27	0.29	0.19	-	-	-	-	12.8
7	7	8	8	8	15	43	0.19	0.35	0.37	0.19	-	-	-	-	12.8
7	7	8	8	8	20	43	0.22	0.44	0.46	0.19	-	-	-	-	12.8
7	7	8	8	8	25	43	0.27	0.54	0.57	0.19	-	-	-	-	12.8
7	7	8	8	8	30	41	0.32	0.65	0.67	0.19	-	-	-	-	12.8
7	3	8	8	8	<2	-	0.28	0.36	0.24	0.19	0.21	0.19	0.19	0.19	9.6 ⑤
7	3	8	8	8	30	58	0.53	0.49	0.50	0.19	-	-	-	-	9.6 ⑤

① For Box Length = 8'-0"

② A_{S1} thru A_{S4}, A_{S7} and A_{S8} are minimum required areas of reinforcement per linear foot of box length. A_{S6} and A_{S5} are minimum required areas of reinforcement per linear foot of box width.

⑤ These designs were created by TxDOT and are not shown in the ASTM Specifications.

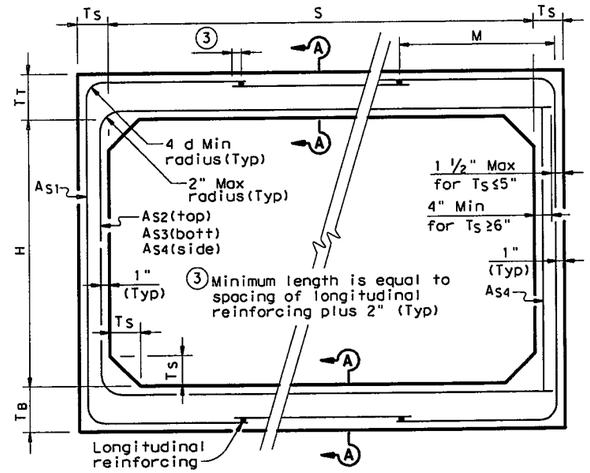

CORNER OPTION "A" CORNER OPTION "B"

FILL HEIGHT 2 FT AND GREATER

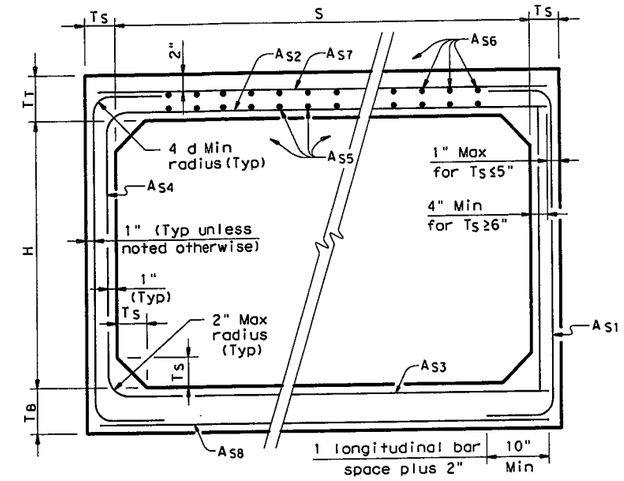

CORNER OPTION "A" CORNER OPTION "B"

FILL HEIGHT LESS THAN 2 FT

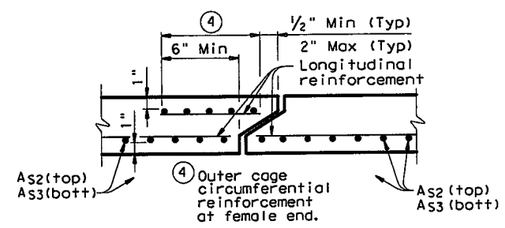

SECTION A-A

(TOP AND BOTTOM SLAB JOINT REINFORCEMENT)

GENERAL NOTES:

Designs shown conform to ASTM C1577.

Refer to ASTM C1577 for information or details not shown.

All concrete shall be Class "H" Concrete with a minimum compressive strength of 5,000 psi.

See SCP-MD standard sheet for miscellaneous details and notes not shown.

In lieu of furnishing the designs shown on this sheet, the contractor may furnish an alternate design that is equal to or exceeds the box design for the design fill height in the table. Shop plans for alternate designs shall be submitted in accordance with Item "Precast Concrete Structures".

HL93 LOADING

Texas Department of Transportation
Bridge Division

SINGLE BOX CULVERTS PRECAST
7'-0" SPAN

SCP-7

FILE: scp07ste.dgn	DN: CAF	CK: LMW	DW: BWH/TxDOT	CK: CAF	
©TxDOT February 2010	DISTRICT	FEDERAL AID PROJECT			SHEET
REVISIONS	FTW	(SEE TITLE SHEET)			1289
	COUNTY		CONTROL	SECT	JOB	HIGHWAY
	TARRANT		0014	16	255, ETC.	IH 35W

DISCLAIMER:
The use of this standard is governed by the "Texas Engineering Practice Act". No warranty of any kind is made by TxDOT for any purpose whatsoever. TxDOT assumes no responsibility for the conversion of this standard to other formats or for incorrect results or damages resulting from its use.

ACC:

LEVELS DISPLAYED

BOX DATA

SECTION DIMENSIONS S (ft)	H (ft)	T_T (in)	T_B (in)	T_S (in)	Fill Height (ft)	M (Min) (in)	REINFORCING (in^2/ft) ② A_{S1}	A_{S2}	A_{S3}	A_{S4}	A_{S5}	A_{S6}	A_{S7}	A_{S8}	① Lift Weight (Tons)
8	4	8	8	8	<2	-	0.27	0.38	0.29	0.19	0.19	0.19	0.19	0.19	11.2
8	4	8	8	8	2<3	50	0.31	0.34	0.32	0.19	-	-	-	-	11.2
8	4	8	8	8	3-5	50	0.25	0.27	0.27	0.19	-	-	-	-	11.2
8	4	8	8	8	10	45	0.26	0.28	0.29	0.19	-	-	-	-	11.2
8	4	8	8	8	15	41	0.34	0.37	0.38	0.19	-	-	-	-	11.2
8	4	8	8	8	20	41	0.44	0.48	0.49	0.19	-	-	-	-	11.2
8	5	8	8	8	<2	-	0.24	0.40	0.32	0.19	0.19	0.19	0.19	0.19	12.0
8	5	8	8	8	2<3	50	0.28	0.37	0.35	0.19	-	-	-	-	12.0
8	5	8	8	8	3-5	45	0.23	0.29	0.30	0.19	-	-	-	-	12.0
8	5	8	8	8	10	45	0.23	0.31	0.32	0.19	-	-	-	-	12.0
8	5	8	8	8	15	41	0.30	0.41	0.42	0.19	-	-	-	-	12.0
8	5	8	8	8	20	41	0.39	0.52	0.54	0.19	-	-	-	-	12.0
8	6	8	8	8	<2	-	0.22	0.42	0.35	0.19	0.19	0.19	0.19	0.19	12.8
8	6	8	8	8	2<3	50	0.25	0.40	0.38	0.19	-	-	-	-	12.8
8	6	8	8	8	3-5	50	0.21	0.32	0.33	0.19	-	-	-	-	12.8
8	6	8	8	8	10	45	0.22	0.33	0.34	0.19	-	-	-	-	12.8
8	6	8	8	8	15	41	0.28	0.43	0.45	0.19	-	-	-	-	12.8
8	6	8	8	8	20	41	0.36	0.55	0.57	0.19	-	-	-	-	12.8
8	7	8	8	8	<2	-	0.20	0.44	0.37	0.19	0.19	0.19	0.19	0.19	13.6
8	7	8	8	8	2<3	55	0.23	0.43	0.41	0.19	-	-	-	-	13.6
8	7	8	8	8	3-5	55	0.19	0.34	0.35	0.19	-	-	-	-	13.6
8	7	8	8	8	10	50	0.20	0.34	0.36	0.19	-	-	-	-	13.6
8	7	8	8	8	15	41	0.26	0.45	0.47	0.19	-	-	-	-	13.6
8	7	8	8	8	20	41	0.33	0.57	0.60	0.19	-	-	-	-	13.6
8	8	8	8	8	<2	-	0.20	0.45	0.40	0.19	0.19	0.19	0.19	0.19	14.4
8	8	8	8	8	2<3	65	0.21	0.45	0.44	0.19	-	-	-	-	14.4
8	8	8	8	8	3-5	65	0.19	0.36	0.38	0.19	-	-	-	-	14.4
8	8	8	8	8	10	55	0.19	0.35	0.38	0.19	-	-	-	-	14.4
8	8	8	8	8	15	45	0.24	0.46	0.49	0.19	-	-	-	-	14.4
8	8	8	8	8	20	45	0.31	0.59	0.62	0.19	-	-	-	-	14.4

① For Box Length = 8'-0"

② A_{S1} thru A_{S4}, A_{S7} and A_{S8} are minimum required areas of reinforcement per linear foot of box length. A_{S6} and A_{S5} are minimum required areas of reinforcement per linear foot of box width.

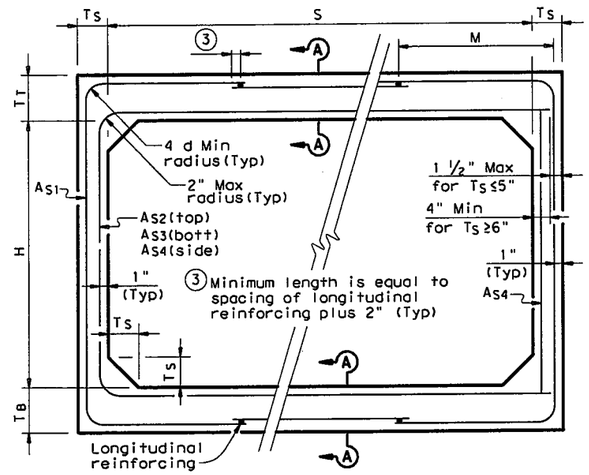

CORNER OPTION "A" CORNER OPTION "B"

FILL HEIGHT 2 FT AND GREATER

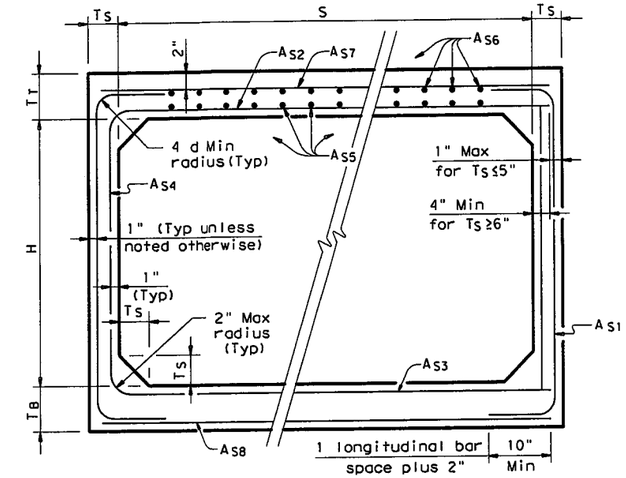

CORNER OPTION "A" CORNER OPTION "B"

FILL HEIGHT LESS THAN 2 FT

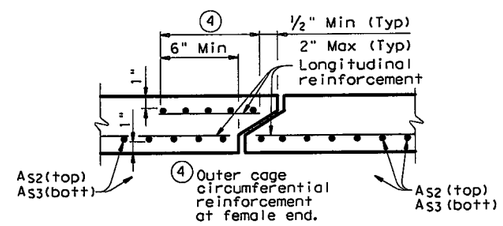

SECTION A-A

(TOP AND BOTTOM SLAB JOINT REINFORCEMENT)

GENERAL NOTES:

Designs shown conform to ASTM C1577. Refer to ASTM C1577 for information or details not shown.

All concrete shall be Class "H" Concrete with a minimum compressive strength of 5,000 psi.

See SCP-MD standard sheet for miscellaneous details and notes not shown.

In lieu of furnishing the designs shown on this sheet, the contractor may furnish an alternate design that is equal to or exceeds the box design for the design fill height in the table. Shop plans for alternate designs shall be submitted in accordance with Item "Precast Concrete Structures".

HL93 LOADING

Texas Department of Transportation
Bridge Division

SINGLE BOX CULVERTS PRECAST

8'-0" SPAN

SCP-8

FILE: scp08ste.dgn	DN: GAF	CK: LMW	DW: BWH/TxDOT	CK: GAF	
© TxDOT February 2010	DISTRICT	FEDERAL AID PROJECT			SHEET
REVISIONS	FTW	(SEE TITLE SHEET)			1290
	COUNTY		CONTROL	SECT	JOB	HIGHWAY
	TARRANT		0014	16	255, ETC.	IH 35W

DISCLAIMER:
The use of this standard is governed by the "Texas Engineering Practice Act". No warranty of any kind is made by TxDOT for any purpose whatsoever. TxDOT assumes no responsibility for the conversion of this standard to other formats or for incorrect results or damages resulting from its use.

ACC:

LEVELS DISPLAYED

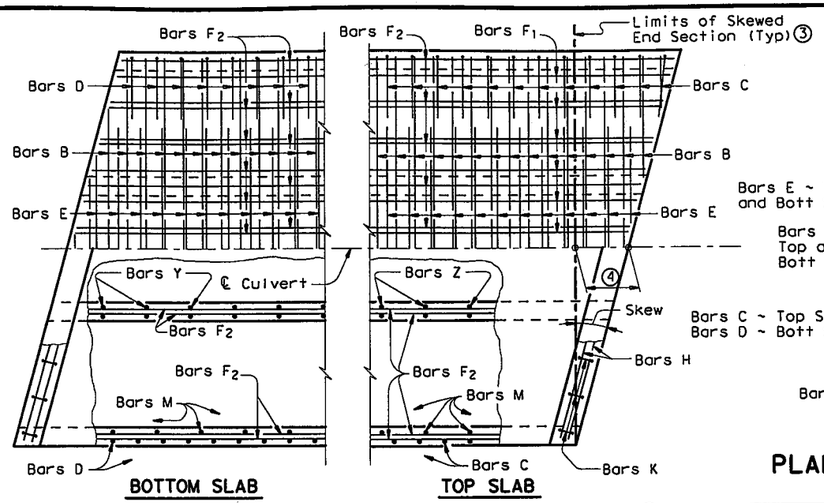

PLAN OF SKEWED ENDS ~ FROM 0° TO 15° ⑦

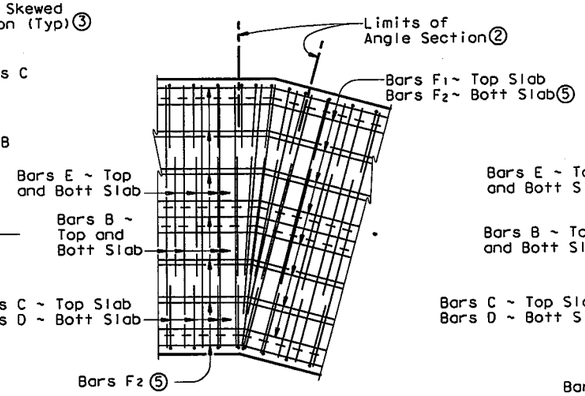

PLAN OF ANGLE SECTION ~ FROM 0° TO 15°

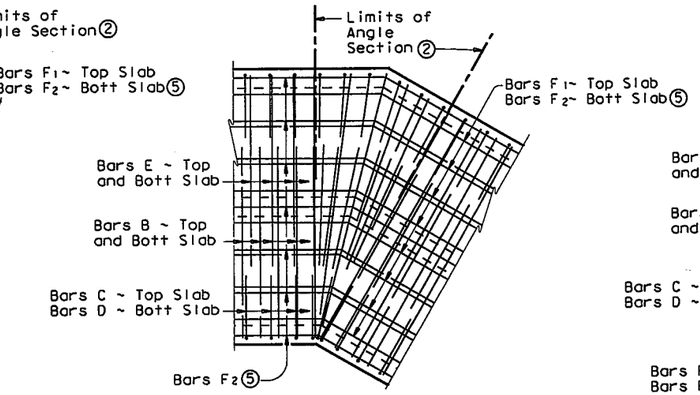

PLAN OF ANGLE SECTION ~ OVER 15° TO 30°

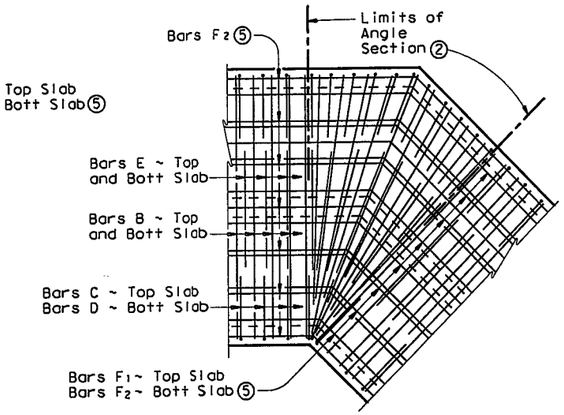

PLAN OF ANGLE SECTION ~ OVER 30° TO 45°

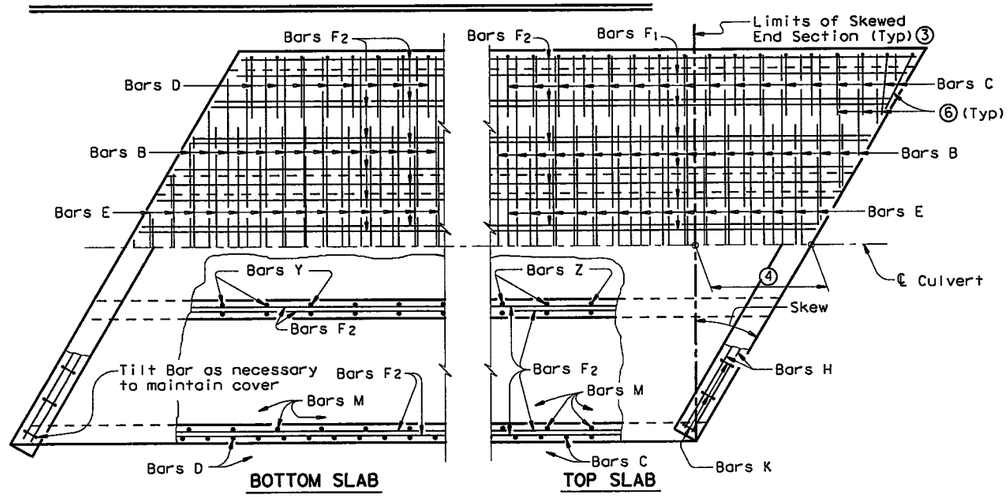

PLAN OF SKEWED ENDS ~ OVER 15° TO 30°

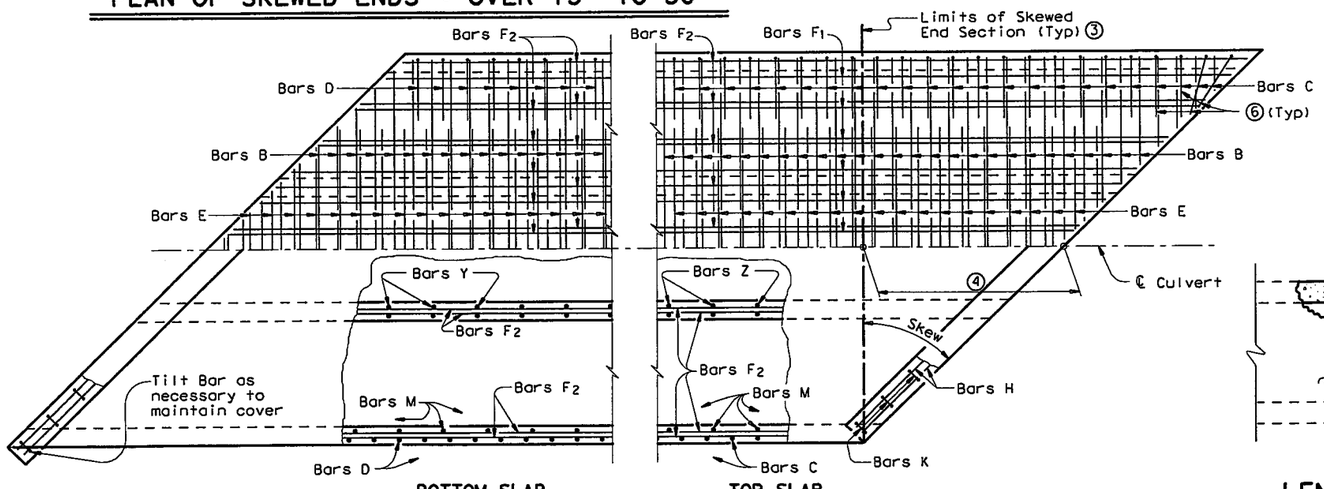

PLAN OF SKEWED ENDS ~ OVER 30° TO 45°

GENERAL NOTES:

Designed according to AASHTO LRFD Specifications.

All reinforcing steel shall be Grade 60.

All concrete shall be Class "C" with these exceptions: use Class "S" for top slabs of culverts with overlay, with 1-to-2 course surface treatment, or with the top slab as the final riding surface.

Class "C" concrete shall have a minimum compressive strength of 3,600 psi. Class "S" concrete shall have a minimum compressive strength of 4,000 psi.

Refer to Multiple Box Culverts Cast-in-Place standard for details of straight sections of culvert. For skewed sections and angle sections refer to Multiple Box Culverts Cast-in-Place standard for slab and wall dimensions, bar sizes, maximum bar spacing, and any other details not shown. For Skewed ends with curbs, adjust length of Bars H, number of Bars K, curb concrete volume and reinforcing steel weight by dividing the values shown on the culvert standards by the cosine of the skew angle.

The use of permanent forms is not allowed.

Laps for Bars H, when required, shall be 1'-9" for uncoated bars and 2'-7" for epoxy coated.

① For box culverts with less than 2'-0" of fill, the top slab shall be broken back to provide a minimum 1'-10" lap of the existing longitudinal bars with the longitudinal bars in the extension. If the depth of fill is 2'-0" or greater, the top slab shall be broken back to provide a 1'-0" minimum embedment of existing longitudinal reinforcing into the extension. Alternatively, if the fill height is greater than 2'-0", the existing curb may be left in place and 2'-0" long #6 bars shall be drilled and grouted 1'-0" into the existing top slab at 1'-6" center to center spacing. Wings and apron shall be broken back as necessary to install the extension. Exposed wingwall and apron reinforcing may be removed or cleaned and included in the extension. When lengthening existing box culverts with dimensions different than current standard dimensions, horizontal and vertical transitions shall be formed as directed by the Engineer. Bottom slabs shall match to maintain an uninterrupted flow line. Existing and new reinforcing shall be field bent into transition maintaining specified cover requirements. For top slabs of culverts with overlay, with 1-to-2 course surface treatment, or with the top slab as the final riding surface, the "H" dimension may be adjusted to provide a smooth riding surface.

② When the spacing between Bars B or Bars E becomes less than half of the normal spacing, bars shall be cut to avoid fouling

③ The length of Bars B and E will vary in the skewed end sections

④ [One half of overall width] x [Tan of the skew angle]

⑤ Bars F1 and F2 shall be continuous through the angle section. They shall be bent to remain parallel to the walls of the Box Culvert.

⑥ When necessary to avoid fouling in acute corners, the slab extension leg of Bars C and Bars D may be shortened to a minimum of 1'-6" for skews of 30° and 45°.

⑦ For skews of 15° or less, the contractor has the option of placing Bars B, C, D and E parallel to the skewed end while maintaining spacing along centerline box. Lengths of Bars B and E shown on the standards shall be increased to accommodate the skew.

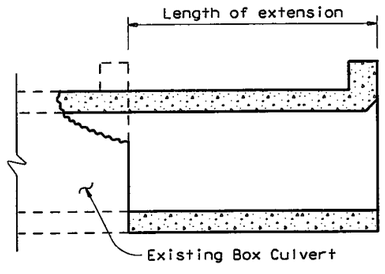

LENGTHENING DETAIL ①

HL93 LOADING

Texas Department of Transportation
Bridge Division

MULTIPLE BOX CULVERTS CAST-IN-PLACE MISCELLANEOUS DETAILS

MC-MD

FILE: mc-mdste.dgn	DN: GAF	CK: LMW	DW: BWH/TxDOT	CK: GAF	
© TxDOT February 2010	DISTRICT	FEDERAL AID PROJECT			SHEET
REVISIONS	FTW	(SEE TITLE SHEET)			1291
	COUNTY		CONTROL	SECT	JOB	HIGHWAY
	TARRANT		0014	16	255, ETC.	IH 35W

DISCLAIMER:
The use of this standard is governed by the "Texas Engineering Practice Act". No warranty of any kind is made by TxDOT for any purpose whatsoever. TxDOT assumes no responsibility for the conversion of this standard to other formats or for incorrect results or damages resulting from its use.

COMMENTS:

ACTIVE FILE LEVELS DISPLAYED
1

BILLS OF REINFORCING STEEL (For Box Length = 40 feet)

NUMBER OF SPANS	SECTION DIMENSIONS S	H	T	U	Bars B No.	Size	Spa	Length	Wt	Bars C & D No.	Size	Spa	Bar C Length	Bar C Wt	Bar D Length	Bar D Wt	Bars E No.	Size	Spa	Length	Wt	Bars F1 ~#4 No.	Spa	Length	Wt	Bars F2 ~#4 at 1'-6" Max No.	Length	Wt	Bars M~#4 at 1'-6" Max No.	Length	Wt
2	6'-0"	3'-0"	7"	7"	162	#5	6"	13'- 6"	2,281	162	#4	6"	8'-11"	965	7'- 8"	830	194	#5	5"	6'- 0"	1,214	16	9"	39'-9"	425	50	39'-9"	1,328	56	3'- 0"	112
3	6'-0"	3'-0"	7"	7"	162	#5	6"	20'- 1"	3,393	162	#4	6"	8'-11"	965	7'- 8"	830	194	#5	5"	12'- 7"	2,546	24	9"	39'-9"	637	71	39'-9"	1,885	56	3'- 0"	112
4	6'-0"	3'-0"	7"	7"	162	#5	6"	26'- 8"	4,506	162	#4	6"	8'-11"	965	7'- 8"	830	194	#5	5"	19'- 2"	3,878	32	9"	39'-9"	850	92	39'-9"	2,443	56	3'- 0"	112
5	6'-0"	3'-0"	7"	7"	162	#5	6"	33'- 3"	5,618	162	#4	6"	8'-11"	965	7'- 8"	830	194	#5	5"	25'- 9"	5,210	40	9"	39'-9"	1,062	113	39'-9"	3,000	56	3'- 0"	112
6	6'-0"	3'-0"	7"	7"	162	#5	6"	39'-10"	6,730	162	#4	6"	8'-11"	965	7'- 8"	830	194	#5	5"	32'- 4"	6,542	48	9"	39'-9"	1,275	134	39'-9"	3,558	56	3'- 0"	112
2	6'-0"	4'-0"	7"	7"	162	#5	6"	13'- 6"	2,281	162	#4	6"	9'-11"	1,073	7'- 8"	830	194	#5	5"	6'- 0"	1,214	16	9"	39'-9"	425	50	39'-9"	1,328	56	4'- 0"	150
3	6'-0"	4'-0"	7"	7"	162	#5	6"	20'- 1"	3,393	162	#4	6"	9'-11"	1,073	7'- 8"	830	194	#5	5"	12'- 7"	2,546	24	9"	39'-9"	637	71	39'-9"	1,885	56	4'- 0"	150
4	6'-0"	4'-0"	7"	7"	162	#5	6"	26'- 8"	4,506	162	#4	6"	9'-11"	1,073	7'- 8"	830	194	#5	5"	19'- 2"	3,878	32	9"	39'-9"	850	92	39'-9"	2,443	56	4'- 0"	150
5	6'-0"	4'-0"	7"	7"	162	#5	6"	33'- 3"	5,618	162	#4	6"	9'-11"	1,073	7'- 8"	830	194	#5	5"	25'- 9"	5,210	40	9"	39'-9"	1,062	113	39'-9"	3,000	56	4'- 0"	150
6	6'-0"	4'-0"	7"	7"	162	#5	6"	39'-10"	6,730	162	#4	6"	9'-11"	1,073	7'- 8"	830	194	#5	5"	32'- 4"	6,542	48	9"	39'-9"	1,275	134	39'-9"	3,558	56	4'- 0"	150
2	6'-0"	5'-0"	7"	7"	162	#5	6"	13'- 6"	2,281	162	#4	6"	10'-11"	1,181	7'- 8"	830	194	#5	5"	6'- 0"	1,214	16	9"	39'-9"	425	56	39'-9"	1,487	56	5'- 0"	187
3	6'-0"	5'-0"	7"	7"	162	#5	6"	20'- 1"	3,393	162	#4	6"	10'-11"	1,181	7'- 8"	830	194	#5	5"	12'- 7"	2,546	24	9"	39'-9"	637	79	39'-9"	2,098	56	5'- 0"	187
4	6'-0"	5'-0"	7"	7"	162	#5	6"	26'- 8"	4,506	162	#4	6"	10'-11"	1,181	7'- 8"	830	194	#5	5"	19'- 2"	3,878	32	9"	39'-9"	850	102	39'-9"	2,708	56	5'- 0"	187
5	6'-0"	5'-0"	7"	7"	162	#5	6"	33'- 3"	5,618	162	#4	6"	10'-11"	1,181	7'- 8"	830	194	#5	5"	25'- 9"	5,210	40	9"	39'-9"	1,062	125	39'-9"	3,319	56	5'- 0"	187
6	6'-0"	5'-0"	7"	7"	162	#5	6"	39'-10"	6,730	162	#4	6"	10'-11"	1,181	7'- 8"	830	194	#5	5"	32'- 4"	6,542	48	9"	39'-9"	1,275	148	39'-9"	3,930	56	5'- 0"	187
2	6'-0"	6'-0"	7"	7"	162	#5	6"	13'- 6"	2,281	194	#4	5"	11'-11"	1,544	7'- 8"	994	194	#5	5"	6'- 0"	1,214	16	9"	39'-9"	425	62	39'-9"	1,646	56	6'- 0"	224
3	6'-0"	6'-0"	7"	7"	162	#5	6"	20'- 1"	3,393	194	#4	5"	11'-11"	1,544	7'- 8"	994	194	#5	5"	12'- 7"	2,546	24	9"	39'-9"	637	87	39'-9"	2,310	56	6'- 0"	224
4	6'-0"	6'-0"	7"	7"	162	#5	6"	26'- 8"	4,506	194	#4	5"	11'-11"	1,544	7'- 8"	994	194	#5	5"	19'- 2"	3,878	32	9"	39'-9"	850	112	39'-9"	2,974	56	6'- 0"	224
5	6'-0"	6'-0"	7"	7"	162	#5	6"	33'- 3"	5,618	194	#4	5"	11'-11"	1,544	7'- 8"	994	194	#5	5"	25'- 9"	5,210	40	9"	39'-9"	1,062	137	39'-9"	3,638	56	6'- 0"	224
6	6'-0"	6'-0"	7"	7"	162	#5	6"	39'-10"	6,730	194	#4	5"	11'-11"	1,544	7'- 8"	994	194	#5	5"	32'- 4"	6,542	48	9"	39'-9"	1,275	162	39'-9"	4,302	56	6'- 0"	224

NUMBER OF SPANS	Bars Y & Z~#4 at 1'-0" Max No.	Bar Y Length	Bar Y Wt	Bar Z Length	Bar Z Wt	Bars H 4~#4 Length	Weight	Bars K No.	Weight	QUANTITIES Per foot of Barrel Conc (CY)	Reinf (Lb)	Curb Conc (CY)	Reinf (Lb)	Total Conc (CY)	Reinf (Lb)
2	41	4'- 6"	123	7'- 0"	192	13'- 6"	36	30	85	0.789	186.8	1.0	121	32.6	7,591
3	82	4'- 6"	246	7'- 0"	383	20'- 1"	54	42	119	1.138	274.9	1.5	173	47.0	11,170
4	123	4'- 6"	370	7'- 0"	575	26'- 8"	71	56	159	1.487	363.2	2.0	230	61.5	14,759
5	164	4'- 6"	493	7'- 0"	767	33'- 3"	89	70	199	1.836	451.4	2.5	288	75.9	18,345
6	205	4'- 6"	616	7'- 0"	959	39'-10"	106	82	233	2.186	539.7	3.0	339	90.4	21,926
2	41	4'- 6"	123	9'- 0"	246	13'- 6"	36	30	85	0.853	191.8	1.0	121	35.1	7,791
3	82	4'- 6"	246	9'- 0"	493	20'- 1"	54	42	119	1.224	281.3	1.5	173	50.5	11,426
4	123	4'- 6"	370	9'- 0"	739	26'- 8"	71	56	159	1.595	371.0	2.0	230	65.8	15,069
5	164	4'- 6"	493	9'- 0"	986	33'- 3"	89	70	199	1.966	460.6	2.5	288	81.1	18,710
6	205	4'- 6"	616	9'- 0"	1,232	39'-10"	106	82	233	2.337	550.2	3.0	339	96.5	22,345
2	41	4'- 6"	123	11'- 0"	301	13'- 6"	36	30	85	0.918	200.7	1.0	121	37.7	8,150
3	82	4'- 6"	246	11'- 0"	603	20'- 1"	54	42	119	1.311	293.0	1.5	173	53.9	11,894
4	123	4'- 6"	370	11'- 0"	904	26'- 8"	71	56	159	1.703	385.4	2.0	230	70.1	15,644
5	164	4'- 6"	493	11'- 0"	1,205	33'- 3"	89	70	199	2.096	477.6	2.5	288	86.3	19,393
6	205	4'- 6"	616	11'- 0"	1,506	39'-10"	106	82	233	2.488	569.9	3.0	339	102.5	23,136
2	41	4'- 6"	123	13'- 0"	356	13'- 6"	36	30	85	0.983	220.2	1.0	121	40.3	8,928
3	82	4'- 6"	246	13'- 0"	712	20'- 1"	54	42	119	1.397	315.2	1.5	173	57.4	12,779
4	123	4'- 6"	370	13'- 0"	1,068	26'- 8"	71	56	159	1.811	410.2	2.0	230	74.4	16,638
5	164	4'- 6"	493	13'- 0"	1,424	33'- 3"	89	70	199	2.225	505.2	2.5	288	91.5	20,495
6	205	4'- 6"	616	13'- 0"	1,780	39'-10"	106	82	233	2.639	600.2	3.0	339	108.6	24,346

H	Bar Dimensions "X"	"Y"
3'-0"	3'-5"	2'-2"
4'-0"	4'-5"	2'-2"
5'-0"	5'-5"	2'-2"
6'-0"	6'-5"	2'-2"

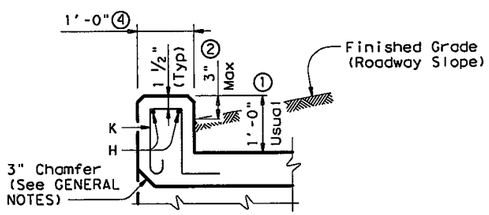

SECTION THRU CURB

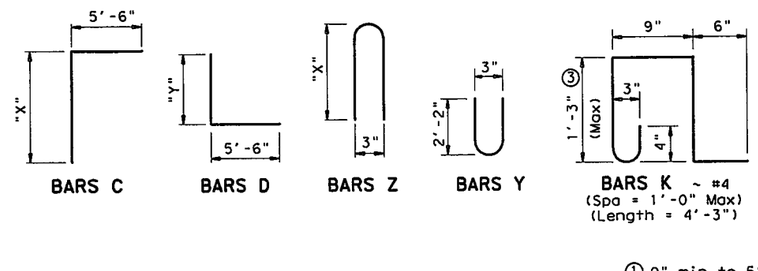

BARS C BARS D BARS Z BARS Y BARS K ~ #4 (Spa = 1'-0" Max) (Length = 4'-3")

GENERAL NOTES:

Designed according to AASHTO LRFD Specifications.
Designed to the maximum fill height shown.
All reinforcing steel shall be Grade 60.
All concrete shall be Class "C" with these exceptions: use Class "S" for top slabs of culverts with overlay, with 1-to-2 course surface treatment, or with the top slab as the final riding surface.
Class "C" concrete shall have a minimum compressive strength of 3,600 psi. Class "S" concrete shall have a minimum compressive strength of 4,000 psi.
The use of permanent forms is not allowed.
The bottom edge of the top slab shall be chamfered 3" at the entrance.
Reinforcing bars shall be adjusted to provide a minimum of 1 1/4" clear cover.
Construction joints shown at the flow line may be raised a maximum of 6" at the Contractor's option. If this option is used, Bars M may be cut off or raised, Bars C and D may be reversed, and Bars Y and Z may be reversed.
See standard MC-MD for skewed ends, angle sections and lengthening details.

① 0" min to 5'-0" max. Estimated curb heights are shown elsewhere in the plans. For structures with pedestrian rail, bicycle rail or curbs taller than 1'-0", refer to ECD standard. For structures with T6 bridge rail, refer to T6-CM standard. For structures with traffic rail, other than T6, refer to RAC standard.

② For vehicle safety, the following requirements must be met:
- For structures without bridge rail, curbs shall project no more than 3" above finished grade.
- For structures with bridge rail, curbs shall be flush with finished grade.

Curb heights shall be reduced, if necessary, to meet the above requirements. No changes will be made in quantities and no additional compensation will be allowed for this work.

③ For curbs less than 1'-0" high, tilt bars K or reduce bar height as necessary to maintain cover. For curbs less than 3" high, bars K may be omitted.

④ 1'-0" typical. 2'-0" when RAC standard is referred to elsewhere in the plans.

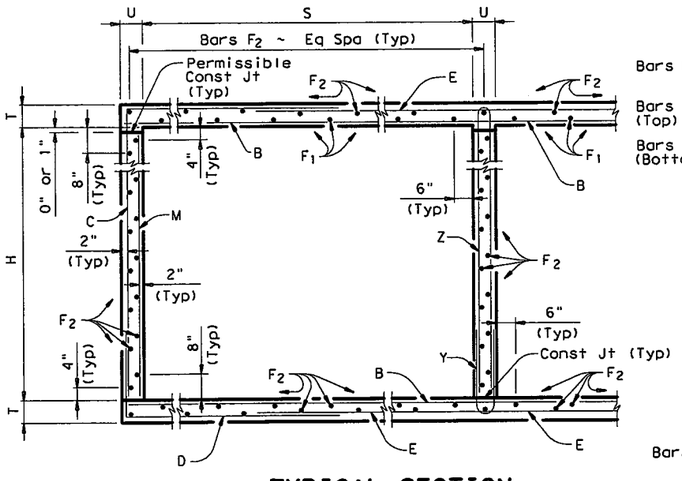

TYPICAL SECTION

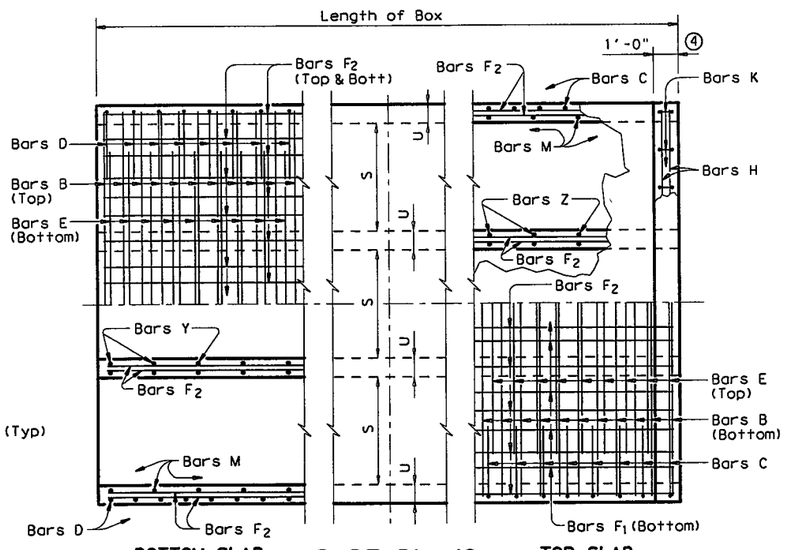

BOTTOM SLAB PART PLANS TOP SLAB

HL93 LOADING

Texas Department of Transportation
Bridge Division

MULTIPLE BOX CULVERTS CAST-IN-PLACE
6'-0" SPAN
0' TO 16' FILL

MC-6-16

FILE: mc616ste.dgn	DN: CAF	CK: LMW	DW: BWH/TxDOT	CK: CAF	
© TxDOT February 2010	DISTRICT	FEDERAL AID PROJECT			SHEET
REVISIONS	FTW	(SEE TITLE SHEET)			1292
	COUNTY		CONTROL	SECT	JOB	HIGHWAY
	TARRANT		0014	16	255, ETC.	IH 35W

DISCLAIMER:
The use of this standard is governed by the "Texas Engineering Practice Act". No warranty of any kind is made by TxDOT for any purpose whatsoever. TxDOT assumes no responsibility for the conversion of this standard to other formats or for incorrect results or damages resulting from its use.

ACC:
LEVELS DISPLAYED
1

Culvert Station and/or Creek name followed by applicable end (Lt, Rt or Both)	Description of Box Culvert No. Spans ~ Span X Height	Max Fill Height (Ft)	Applicable Box Culvert Standard (4)	Applicable Wingwall or End Treatment Standard	Skew Angle (0°, 15°, 30° or 45°)	Side Slope or Channel Slope Ratio (SL:1)	T Culvert Top Slab Thickness (In)	U Culvert Wall Thickness (In)	C Estimated Curb Height (Ft)	Hw (1) Height of Wingwall (Ft)	A Curb to End of Wingwall (Ft)	B Offset of End of Wingwall (Ft)	Lw Length of Longest Wingwall (Ft)	Ltw Culvert Toewall Length (Ft)	Atw Anchor Toewall Length (Ft)	Riprap Apron (C.Y.)	Class (2) "C" Conc (Curb) (C.Y.)	Class (3) "C" Conc (Wingwall) (C.Y.)	Total Wingwall Area (S.F.)
Culvert 1 - Trib to Stream BFC-2A (Lt)	3 ~ 7'x 5'	6'	SCP-7	PW-1	0°	2:1	8"	8"	1.831'	7.500'	N/A	N/A	15.000'	26.000'	N/A	0.0	1.8	15.9	225
Culvert 1 - Trib to Stream BFC-2A (Rt)	3 ~ 7'x 5'	6'	SCP-7	PW-1	0°	2:1	8"	8"	0.837'	6.500'	N/A	N/A	13.000'	26.000'	N/A	0.0	0.8	12.0	169
Culvert 2 - Stream BFC-2 DC 35N-287W (Bo	7 ~ 8'x 5'	4'	SCP-8	PW-1	30°	3:1	8"	8"	1.338'	7.000'	N/A	N/A	24.249'	78.905'	N/A	0.0	7.8	56.6	678
Culvert 2 - Stream BFC-2 Main Lanes (Lt)	7 ~ 8'x 5'	7'	SCP-8	PW-1	45°	3:1	8"	8"	1.324'	7.000'	N/A	N/A	29.698'	96.638'	N/A	0.0	4.7	34.6	416
Culvert 2 - Stream BFC-2 Main Lanes (Rt)	7 ~ 8'x 5'	7'	SCP-8	PW-1	45°	3:1	8"	8"	0.838'	6.500'	N/A	N/A	27.577'	96.638'	N/A	0.0	3.0	28.7	359
Culvert 2 - Stream BFC-2 SBFR (Both)	7 ~ 8'x 5'	5'	SCP-8	PW-1	45°	3:1	8"	8"	2.338'	8.000'	N/A	N/A	33.941'	96.638'	N/A	0.0	16.8	83.6	1086
Culvert 5 - Sta. 1602+26.16 (Lt)	2 ~ 6'x 3'	3'	MC-6-16	PW-1	30°	3:1	7"	7"	2.500'	6.083'	N/A	N/A	21.073'	15.877'	N/A	0.0	1.5	17.4	256
Line 02A (Both)	1 ~ 4'x 2'	2'	SCP-4	SETB-PD	0°	6:1	5"	5"	1.000'	3.167'	N/A	N/A	17.500'	N/A	5.167'	0.0	0.4	6.8	N/A
Lat 02A11 (Both)	2 ~ 4'x 3'	7'	SCP-4	SETB-CD	0°	6:1	5"	5"	1.000'	4.167'	N/A	N/A	23.000'	N/A	10.500'	0.0	0.8	17.6	N/A
Lat 02G12 (Lt)	1 ~ 3'x 3'	4'	SCP-3	SETB-CD	0°	6:1	4"	4"	1.000'	4.083'	N/A	N/A	22.500'	N/A	4.167'	0.0	0.1	4.3	N/A
Lat 02A37 (Both)	1 ~ 4'x 3'	8'	SCP-4	SETB-CD	0°	6:1	5"	5"	1.000'	4.167'	N/A	N/A	23.000'	N/A	5.167'	0.0	0.4	9.8	N/A

NOTES:

Skew Angle = 0° for SW-0, FW-0, SETB-CD, SETB-SW-0, and SETB-FW-0 standards.
30° Maximum for Safety End Treatment

SL:1 = Horizontal:1 Vertical
Side Slope at culvert for Flared or Straight Wingwalls. Channel Slope for Parallel Wingwalls.
Slope shall be 3:1 or flatter for Safety End Treatments.

T = Box Culvert Top Slab Thickness. Dimension can be found on the applicable Box Culvert Standard.

U = Box Culvert Wall Thickness. Dimension can be found on the applicable Box Culvert Standard.

C = Curb Height.

See applicable wing or end treatment standards for calculations of Hw, A, B, Lw, Ltw, Atw, and Total Wingwall Area.
Hw = Height of Wingwall.
A = Distance from Face of Curb to End of Wingwall (Not applicable to Parallel or Straight Wingwalls).
B = Offset of End of Wingwall (Not applicable to Parallel or Straight Wingwalls).
Lw = Length of Longest Wingwall.
Ltw = Length of Culvert Toewall (Not applicable when using Riprap Apron).
Atw = Length of Anchor Toewall (Applicable to Safety End Treatment only).
Total Wingwall Area = Wingwall area in S.F. for two wingwalls (one structure end) if Lt or Rt.
Area for four wingwalls (two structure ends) if Both.

(1) The wall heights shown will be rounded to the nearest Foot for bidding purposes.

(2) Concrete volume shown is for box culvert curb only. For curbs using the RAC standard, quantities shown must be increased by a factor of 2. If Class "S" concrete is required for the top slab of the culvert, the curb concrete shall also be Class "S". Curb concrete is considered part of the Box Culvert for payment.

(3) Concrete volume shown is total of wing, footing, culvert toewall (if any), anchor toewall (if any) and wingwall toewall. Riprap apron, culvert and curb quantities are not included.

(4) Regardless of the type of culvert shown on this sheet, the Contractor shall have the option of furnishing cast-in-place or precast culverts unless otherwise shown elsewhere on the plans. If the Contractor elects to provide culverts of a different type than those shown on this sheet, it shall be the Contractor's responsibility to make the necessary adjustments to the dimensions and quantities shown.

SPECIAL NOTE:

This sheet is a supplement to the Box Culvert standards. It is to be filled out by the culvert specifier and provides dimensions for the construction of the Box Culvert Wingwalls and Safety End Treatments.

An Excel 97 spreadsheet to assist in completing this table can be downloaded from the Bridge Standards (English) web page on the TxDOT web site. The completed sheet shall be signed, sealed, and dated by a licensed Professional Engineer.

STATE OF TEXAS
SHAFEE YUSUF
94963
LICENSED PROFESSIONAL ENGINEER
7/5/12

STATE OF TEXAS
JOHN A. TERRY
51729
REGISTERED PROFESSIONAL ENGINEER
7-6-12

I. S. ENGINEERS, LLC (TBPE F-11657) H & H RESOURCES, INC (TBPE F-3678)

Texas Department of Transportation
Bridge Division

BOX CULVERT SUPPLEMENT
WINGS AND END TREATMENTS

BCS

FILE: bcsstdel.dgn	DN: TxDOT	CK: TxDOT	DW: TxDOT	CK: CAF	
© TxDOT February 2010	DISTRICT	FEDERAL AID PROJECT			SHEET
REVISIONS	FTW	(SEE TITLE SHEET)			1293
	COUNTY		CONTROL	SECT	JOB	HIGHWAY
	TARRANT		0014	16	255, ETC.	IH 35W

DISCLAIMER:
The use of this standard is governed by the "Texas Engineering Practice Act". No warranty of any kind is made by TxDOT for any purpose whatsoever. TxDOT assumes no responsibility for the conversion of this standard to other formats or for incorrect results or damages resulting from its use.

COMMENTS:

LEVELS DISPLAYED 1 2

TABLE OF DIMENSIONS & REINFORCING STEEL
(Wings for One Structure End)

Dimensions					Variable Reinforcing				Estimated ④ Quantities per ft of wing (2~Wings)		Estimated Quantities per ft of Toewall (1~Toewall)	
					Bars J1		Bars J2					
Maximum Wingwall Height Hw	W	X	Y	Z	Size	Spa	Size	Spa	Reinf (Lb/Ft)	Conc (CY/Ft)	Reinf (Lb/Ft)	Conc (CY/Ft)
2'-6"	2'-10"	10"	1'- 0"	7"	#4	1'-0"	#4	1'-0"	48.64	0.406	6.85	0.071
2'-9"	2'-10"	10"	1'- 0"	7"	#4	1'-0"	#4	1'-0"	49.31	0.424	6.85	0.071
3'-0"	2'-10"	10"	1'- 0"	7"	#4	1'-0"	#4	1'-0"	49.98	0.444	6.85	0.071
3'-3"	2'-10"	10"	1'- 0"	7"	#4	1'-0"	#4	1'-0"	53.32	0.462	6.85	0.071
3'-6"	2'-10"	10"	1'- 0"	7"	#4	1'-0"	#4	1'-0"	53.98	0.480	6.85	0.071
4'-0"	3'- 2"	1'- 2"	1'- 0"	7"	#4	1'-0"	#4	1'-0"	55.77	0.532	6.85	0.071
4'-6"	3'- 2"	1'- 2"	1'- 0"	7"	#4	1'-0"	#4	1'-0"	59.77	0.568	6.85	0.071
5'-0"	3'- 9"	1'- 7"	1'- 2"	7"	#4	1'-0"	#4	1'-0"	63.45	0.632	6.96	0.075
5'-6"	3'- 9"	1'- 7"	1'- 2"	7"	#4	1'-0"	#4	1'-0"	67.46	0.668	6.96	0.075
6'-0"	4'- 4"	2'- 0"	1'- 4"	7"	#5	1'-0"	#5	1'-0"	80.67	0.730	7.07	0.078
6'-6"	4'- 4"	2'- 0"	1'- 4"	7"	#5	1'-0"	#5	1'-0"	85.05	0.768	7.07	0.078
7'-0"	5'- 0"	2'- 3"	1'- 9"	8"	#5	1'-0"	#5	1'-0"	92.15	0.864	8.07	0.093
7'-6"	5'- 0"	2'- 3"	1'- 9"	8"	#5	1'-0"	#5	1'-0"	96.54	0.902	8.07	0.093
8'-0"	5'- 6"	2'- 8"	1'-10"	8"	#5	6"	#5	6"	139.04	0.962	8.13	0.095
8'-6"	5'- 6"	2'- 8"	1'-10"	8"	#5	6"	#5	6"	144.47	1.000	8.13	0.095
9'-6"	6'- 0"	2'-10"	2'- 2"	9"	#5	6"	#5	6"	156.93	1.136	8.41	0.110
10'-6"	6'- 5"	3'- 0"	2'- 5"	9"	#6	6"	#5	6"	196.27	1.234	8.57	0.117
11'-6"	7'- 2"	3'- 6"	2'- 8"	11"	#6	6"	#6	6"	230.13	1.438	9.52	0.140
12'-6"	7'- 8"	3'- 9"	2'-11"	1'- 0"	#7	6"	#6	6"	283.41	1.592	9.74	0.157
13'-6"	8'- 2"	4'- 0"	3'- 2"	1'- 2"	#8	6"	#6	6"	348.72	1.804	10.02	0.186
14'-6"	8'-10"	4'- 5"	3'- 5"	1'- 4"	#9	6"	#6	6"	432.94	2.046	10.30	0.218
15'-6"	9'- 6"	4'-10"	3'- 8"	1'- 6"	#9	6"	#7	6"	489.52	2.302	11.24	0.253
16'-0"	9'-11"	5'- 0"	3'-11"	1'- 7"	#9	6"	#7	6"	505.72	2.448	11.47	0.279

TABLE OF WINGWALL REINFORCING (2~Wings)

Bar	Size	No.	Spa
D1	#6	~	1'-0"
D2	#6	~	1'-0"
E1	#4	~	1'-0"
F	#4	~	1'-0"
G	#6	~	8"
M1	#4	4	~
P	#4	~	1'-0"
V	#4	~	1'-0"

TABLE OF TOEWALL REINFORCING

Bar	Size	No	Spa
J3	#4	~	1'-0"
M2	#4	2	~
E2	#4	~	1'-0"

WING DIMENSION CALCULATIONS:

Formulas: (All values are in Feet)

Hw = H + T + C

Lw = (Hw) (SL) ÷ Cosine (Θ)

For Cast-in-place culverts:

Ltw = [(N) (S) + (N + 1) (U)] ÷ (Cosine Θ)

For Precast culverts:

Ltw = [(N) (2 U + S) + (N − 1) (0.5')] ÷ (Cosine Θ)

Total Wingwall Area (Two Wings ~ S.F.) = (2) (Hw) (Lw)

Hw = Height of Wingwall
Lw = Length of Wingwall
Ltw = Culvert Toewall Length
N = Number of Culvert Spans
SL:1 = Channel Slope ratio. (Horizontal: 1 Vertical, Usual value is 2:1)
Θ = Culvert Skew

See applicable box culvert standard for S, H, T and U values.

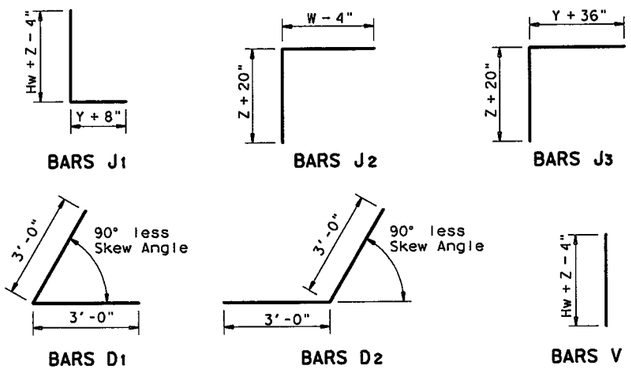

① Skew Angle = 0°

② At discharge end, chamfer may be ¾".

③ For 15° Skew ~ 1"
For 30° Skew ~ 2"
For 45° Skew ~ 3"

④ Quantities shown are for two wings. To determine total quantities for two wings, multiply the tabulated values by Lw. Quantities shown do not include weight for Bars D.

⑤ Provide weepholes for Hw = 5'-0" and greater. Fill around weepholes with coarse gravel.

⑥ Extend Bars E2 1'-6" minimum into the wingwall footing.

⑦ Lap Bars M1 1'-6" minimum with Bars M2.

⑧ Bars G shall be equally spaced at 8" maximum, placed as shown. There shall be at least two pair Bars G per wing.

⑨ 0" min to 5'-0" max. Estimated curb heights are shown elsewhere in the plans. For structures with pedestrian rail, bicycle rail or curbs taller than 1'-0", refer to ECD standard. For structures with T6 bridge rail, refer to T6-CM standard. For structures with traffic rail, other than T6, refer to RAC standard.

⑩ For vehicle safety, the following requirements must be met:
- For structures without bridge rail, curbs shall project no more than 3" above finished grade.
- For structures with bridge rail, curbs shall be flush with finished grade.

Curb heights shall be reduced, if necessary, to meet the above requirements. No changes will be made in quantities and no additional compensation will be allowed for this work.

⑪ 1'-0" typical. 2'-0" typical when RAC standard is referenced elsewhere in the plans.

GENERAL NOTES:

Designed according to AASHTO LRFD Specifications.
All reinforcing steel shall be Grade 60.
All concrete shall be Class "C" and shall have a minimum compressive strength of 3600 psi.
All reinforcing bars shall be adjusted to provide a minimum of 1 ¼" clear cover.
When structure is founded on solid rock, depth of toewalls for culverts and wingwalls may be reduced or eliminated as directed by the Engineer.
See BCS sheet for additional dimensions and information.
The quantities for concrete and reinforcing steel resulting from the formulas given on this sheet are for Contractor's information only.

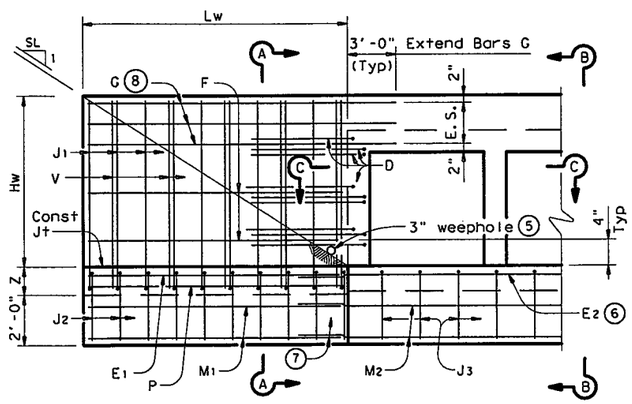

PARTIAL ELEVATION

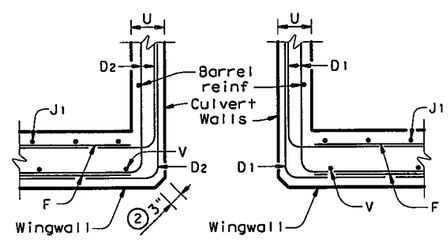

SECTION C-C

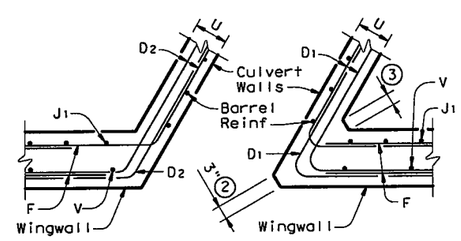

SECTION C-C

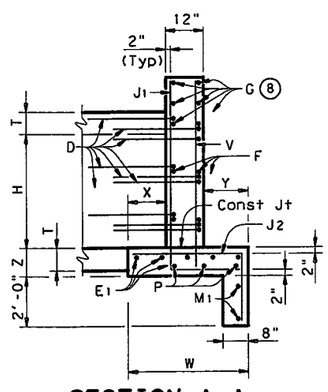

SECTION A-A
(Showing Wing Reinf)

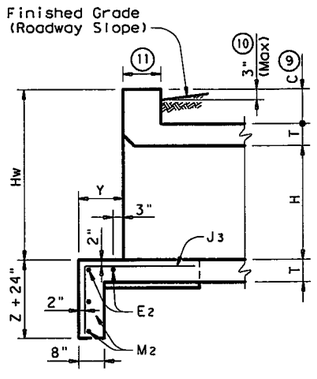

SECTION B-B
(Showing Toewall Reinf)

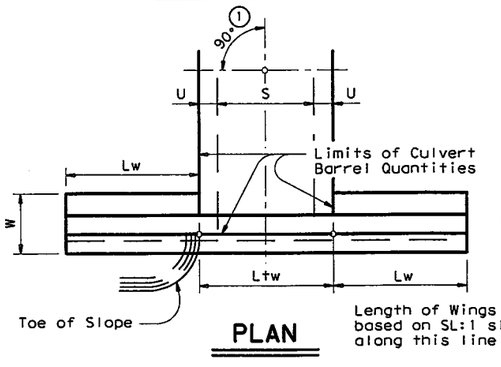

PLAN

DETAILS FOR NON-SKEWED BOX CULVERTS

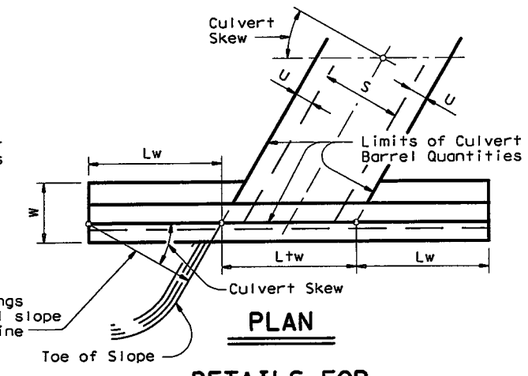

PLAN

DETAILS FOR SKEWED BOX CULVERTS
(Showing 30° Skew)

DISCLAIMER:
The use of this standard is governed by the "Texas Engineering Practice Act". No warranty of any kind is made by TxDOT for any purpose whatsoever. TxDOT assumes no responsibility for the conversion of this standard to other formats or for incorrect results or damages resulting from its use.

ACC:
LEVELS DISPLAYED
1

Texas Department of Transportation
Bridge Division

CONCRETE WINGWALLS WITH PARALLEL WINGS FOR SKEWED AND NON-SKEWED BOX CULVERTS

PW

FILE: pwstde01.dgn	DN: GAF	CK: CAT	DW: TxDOT	CK: GAF
© TxDOT February 2010	DISTRICT	FEDERAL AID PROJECT		SHEET
REVISIONS	FTW	(SEE TITLE SHEET)		1294
11-10: Reinforcing Quantities.	COUNTY	CONTROL	SECT	JOB	HIGHWAY
	TARRANT	0014	16	255, ETC.	IH 35W

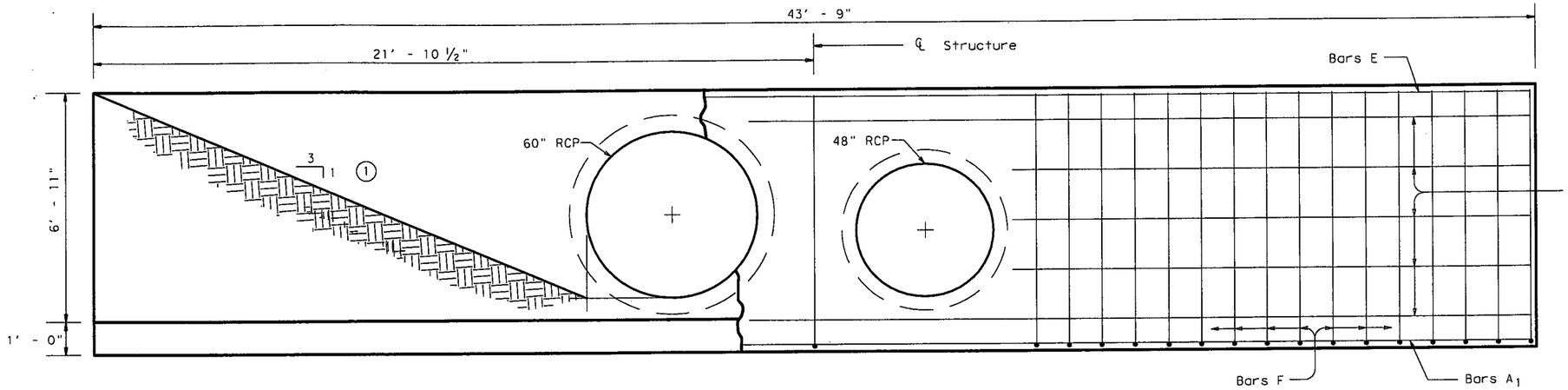

ELEVATION

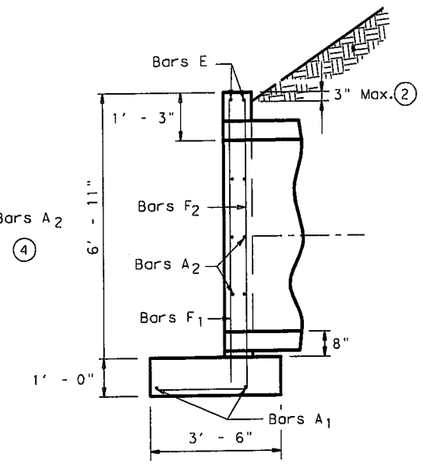

℄ SECTION

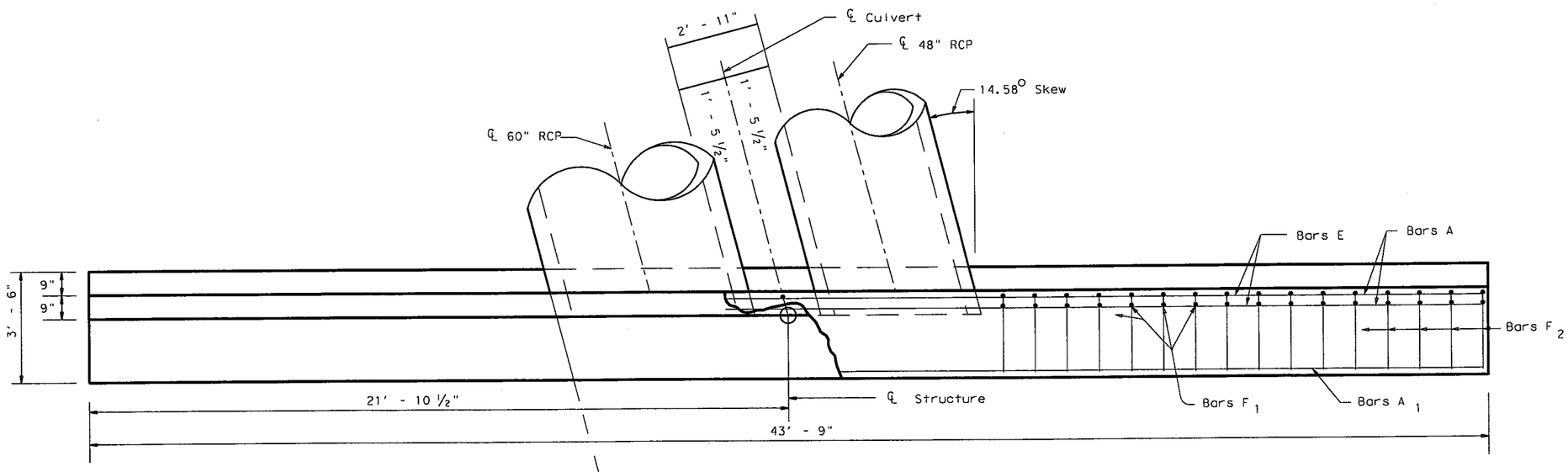

PLAN

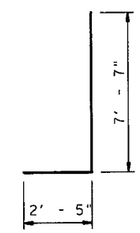

BARS F2

GENERAL NOTES:

1. Designed according to AASHTO LRFD Specifications.
2. Reinforcing steel shall be placed with the center of the outside layer of bars 2" from the surface of the concrete.
3. All reinforcing steel shall be Grade 60.
4. All concrete shall be Class "C" and shall have a minimum compressive strength of 3600 psi.
5. No bridge rails of any type may be mounted directly to these culvert headwalls.

TABLE OF REINFORCING STEEL AND QUANTITIES

BAR	SIZE	SPACING	No.	LENGTH	WEIGHT
A_1	#5	-	2	43' - 5"	91
4 A_2	#5	1- 6"	10	VAR.	348
E	#5	-	2	43' - 5"	91
F_1	#5	1' - 0"	32	7' - 7"	253
F_2	#5	1' - 0"	32	10' - 0"	334
CONC. (CY)		13.15	REINF. STL (LBS)		1117

1. Indicated slope is perpendicular to centerline Pipe or Pipes.
2. For vehicle safety, curbs shall project no more than 3" above finished grade. Curb heights shall be reduced, if necessary, to meet these requirements. No changes will be made in quantities and no additional compensation will be allowed for this work.
3. Quantities shown are for one structure end only (one headwall).
4. Cut Bars A2 as needed to clear culvert pipes.

STATE OF TEXAS
JOHN A. TERRY
51729
REGISTERED PROFESSIONAL ENGINEER

7-5-12

H & H RESOURCES, INC (TBPE F-3678)

Mod. 5-2012:
Headwall with 1-60" RCP & 1-48" RCP at 14.58 skew

Texas Department of Transportation
Bridge Division

CONCRETE HEADWALLS WITH PARALLEL WINGS FOR SKEWED PIPE CULVERTS

CH-PW S (SPL)

FILE: chpwsste SPL.dgn	DN: TxDOT	CK: TxDOT	DW: TxDOT	CK: GAF	
© TxDOT February 2010	DISTRICT	FEDERAL AID PROJECT			SHEET
REVISIONS	FTW	(SEE TITLE SHEET)			1295
	COUNTY		CONTROL	SECT	JOB	HIGHWAY
	TARRANT		0014	16	255, ETC.	IH 35W

DISCLAIMER:
The use of this standard is governed by the "Texas Engineering Practice Act". No warranty of any kind is made by TxDOT for any purpose whatsoever. TxDOT assumes no responsibility for the conversion of this standard to other formats or for incorrect results or damages resulting from its use.

ACC:

LEVELS DISPLAYED

DISCLAIMER:
The use of this standard is governed by the "Texas Engineering Practice Act". No warranty of any kind is made by TxDOT for any purpose whatsoever. TxDOT assumes no responsibility for the conversion of this standard to other formats or for incorrect results or damages resulting from its use.

http://www.dot.state.tx.us/ftw/specinfo/standard.htm ci102fw.dgn

BILL OF REINFORCING STEEL

Depth "D"	All Widths and Lengths Bars C	Bars D	Bars E	Bars J	Opening Length "L"= 5 ft, Widths "W" 3ft Bars F	4ft Bars F	5ft Bars F	Bars A	Bars B	Opening Length "L"= 10 ft, Widths "W" 3ft Bars G	Bars F	4ft Bars F	5ft Bars F	Bars A	Bars B	Opening Length "L"= 15 ft, Widths "W" 3ft Bars G	Bars F	4ft Bars F	5ft Bars F	Bars A	Bars B	Opening Length "L"= 20 ft, Widths "W" 3ft Bars G	Bars M	Bars N	3ft Bars F	4ft Bars F	5ft Bars F	Bars A	Bars B	Bars G	Bars M	Bars N	Steps
3'-6"	17	3	2	4	20	24	28	10	10	20	28	32	36	18	18	28	36	40	44	26	26	36	2	2	44	48	52	34	34	44	2	2	1
3'-9"	18	"	"	"	"	"	"	"	"	20	"	"	"	"	"	28	"	"	"	"	"	36	"	"	"	"	"	"	"	"	44	"	"	1
4'-0"	19	"	"	"	"	"	"	"	"	24	"	"	"	"	"	32	"	"	"	"	"	40	"	"	"	"	"	"	"	"	48	"	"	1
4'-3"	19	"	"	"	"	"	"	"	"	24	"	"	"	"	"	32	"	"	"	"	"	40	"	"	"	"	"	"	"	"	48	"	"	1
4'-6"	21	"	"	"	"	"	"	"	"	26	"	"	"	"	"	34	"	"	"	"	"	42	"	"	"	"	"	"	"	"	50	"	"	2
4'-9"	21	"	"	"	"	"	"	"	"	26	"	"	"	"	"	34	"	"	"	"	"	42	"	"	"	"	"	"	"	"	50	"	"	2
5'-0"	21	"	"	"	"	"	"	"	"	26	"	"	"	"	"	34	"	"	"	"	"	42	"	"	"	"	"	"	"	"	50	"	"	2
5'-3"	23	"	"	"	"	"	"	"	"	28	"	"	"	"	"	36	"	"	"	"	"	44	"	"	"	"	"	"	"	"	52	"	"	2
5'-6"	23	"	"	"	"	"	"	"	"	28	"	"	"	"	"	36	"	"	"	"	"	44	"	"	"	"	"	"	"	"	52	"	"	2
5'-9"	25	"	"	"	"	"	"	"	"	30	"	"	"	"	"	38	"	"	"	"	"	46	"	"	"	"	"	"	"	"	54	"	"	2
6'-0"	25	"	"	"	"	"	"	"	"	30	"	"	"	"	"	38	"	"	"	"	"	46	"	"	"	"	"	"	"	"	54	"	"	3
7'-0"	29	"	"	"	"	"	"	"	"	34	"	"	"	"	"	42	"	"	"	"	"	50	"	"	"	"	"	"	"	"	58	"	"	3
8'-0"	31	"	"	"	"	"	"	"	"	36	"	"	"	"	"	44	"	"	"	"	"	52	"	"	"	"	"	"	"	"	60	"	"	4
9'-0"	35	"	"	"	"	"	"	"	"	40	"	"	"	"	"	48	"	"	"	"	"	56	"	"	"	"	"	"	"	"	64	"	"	5
10'-0"	38	"	"	"	"	"	"	"	"	42	"	"	"	"	"	50	"	"	"	"	"	58	"	"	"	"	"	"	"	"	66	"	"	5

SUMMARY OF QUANTITIES FOR STREET INLETS

Depth "D"	5'-0" Opening "L" Width 3'-0" Conc. C.Y.	Steel Lbs.	Width 4'-0" Conc. C.Y.	Steel Lbs.	Width 5'-0" Conc. C.Y.	Steel Lbs.	10'-0" Opening "L" Width 3'-0" Conc. C.Y.	Steel Lbs.	Width 4'-0" Conc. C.Y.	Steel Lbs.	Width 5'-0" Conc. C.Y.	Steel Lbs.	15'-0" Opening "L" Width 3'-0" Conc. C.Y.	Steel Lbs.	Width 4'-0" Conc. C.Y.	Steel Lbs.	Width 5'-0" Conc. C.Y.	Steel Lbs.	20'-0" Opening "L" Width 3'-0" Conc. C.Y.	Steel Lbs.	Width 4'-0" Conc. C.Y.	Steel Lbs.	Width 5'-0" Conc. C.Y.	Steel Lbs.
3'-6"	2.62	306	2.95	332	3.28	373	4.12	479	4.64	521	5.20	564	5.69	667	6.40	721	7.10	775	7.20	846	8.11	909	9.03	976
3'-9"	2.70	309	3.04	341	3.39	373	4.25	494	4.78	536	5.34	579	5.87	687	6.58	741	7.30	796	7.42	874	8.34	937	9.27	1010
4'-0"	2.78	328	3.14	364	3.49	399	4.38	518	4.92	565	5.49	610	6.05	718	6.77	776	7.49	835	7.64	909	8.58	976	9.51	1046
4'-3"	2.87	334	3.23	370	3.59	406	4.51	526	5.06	573	5.64	619	6.22	729	6.95	787	7.69	847	7.87	922	8.81	990	9.75	1061
4'-6"	2.95	356	3.32	394	3.69	431	4.64	558	5.20	607	5.79	656	6.40	770	7.14	830	7.88	891	8.09	973	9.04	1043	9.99	1115
4'-9"	3.03	361	3.41	410	3.79	438	4.77	566	5.34	616	5.94	665	6.57	780	7.32	841	8.07	903	8.31	986	9.27	1056	10.23	1129
5'-0"	3.12	367	3.51	416	3.90	445	4.90	574	5.47	624	6.09	674	6.75	791	7.51	853	8.27	915	8.53	999	9.50	1070	10.47	1144
5'-3"	3.20	383	3.60	424	4.00	465	5.03	600	5.61	652	6.23	704	6.93	827	7.69	890	8.46	955	8.76	1044	9.73	1118	10.71	1194
5'-6"	3.28	389	3.69	430	4.10	472	5.16	608	5.75	661	6.38	713	7.11	837	7.88	901	8.66	967	8.98	1057	9.97	1131	10.95	1208
5'-9"	3.37	405	3.78	451	4.20	495	5.29	635	5.89	690	6.53	744	7.28	874	8.07	940	8.85	1007	9.20	1102	10.20	1178	11.19	1258
6'-0"	3.45	415	3.88	460	4.30	504	5.42	646	6.03	702	6.68	757	7.45	888	8.25	954	9.05	1022	9.42	1119	10.43	1196	11.43	1276
7'-0"	3.78	460	4.25	510	4.71	560	5.94	716	6.59	777	7.27	837	8.16	981	8.99	1053	9.82	1126	10.31	1237	11.35	1319	12.40	1404
8'-0"	4.12	496	4.62	550	5.12	604	6.46	770	7.14	834	7.86	899	8.86	1051	9.73	1129	10.60	1205	11.20	1325	12.28	1412	13.36	1510
9'-0"	4.45	545	4.99	605	5.53	664	6.97	842	7.70	912	8.46	982	9.56	1148	10.47	1231	11.38	1313	12.09	1447	13.21	1539	14.32	1631
10'-0"	4.78	582	5.36	645	5.93	708	7.49	900	8.11	974	9.05	1048	10.27	1227	11.21	1312	12.16	1399	12.98	1546	14.13	1642	15.29	1739

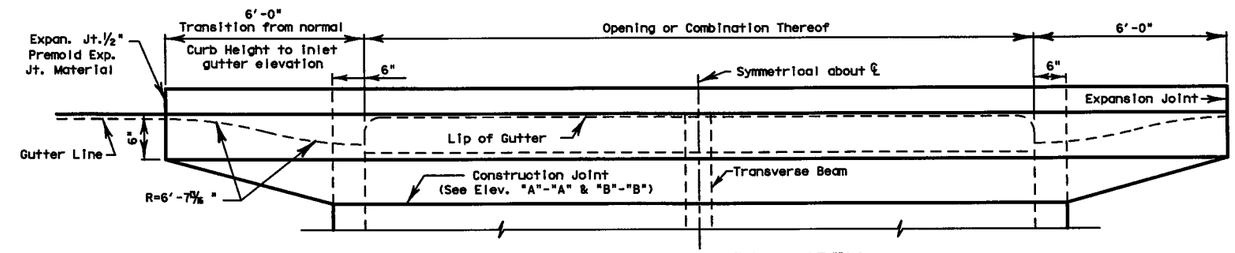

FRONT ELEVATION VIEW

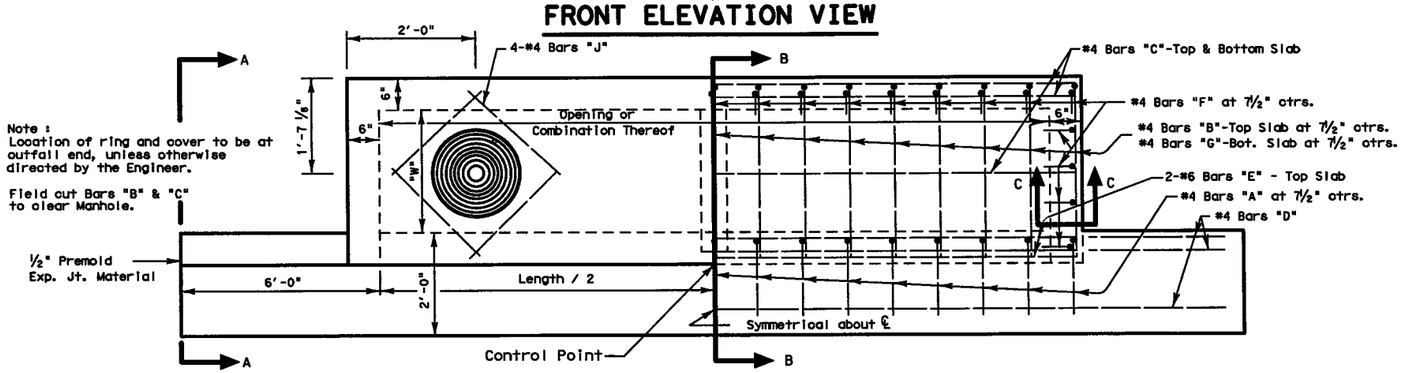

PLAN VIEW

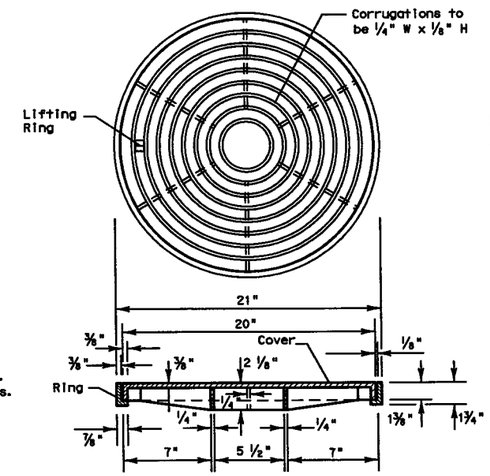

CAST IRON RING & COVER DETAIL

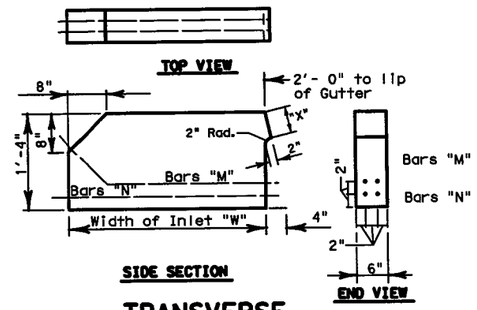

TRANSVERSE BEAM DETAIL

(For Use With 15' & 20' Inlets)

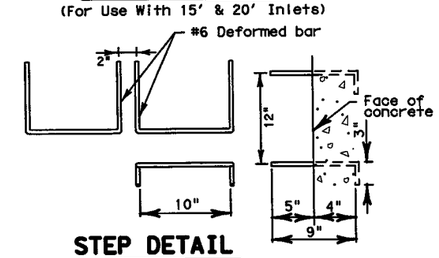

STEP DETAIL

THROAT DIMENSION	
CURB HEIGHT	"X"
5"	5"
6"	5⅞"
7"	6¼"
8"	6½"

CONCRETE QUANTITY REDUCTION TABLE	
Pipe Diameter	Reduction One Pipe C.U. Yd.
15"	0.04
18"	0.05
21"	0.08
24"	0.09
27"	0.11
30"	0.14
33"	0.17
36"	0.20
39"	0.23
42"	0.26
45"	0.30
48"	0.35

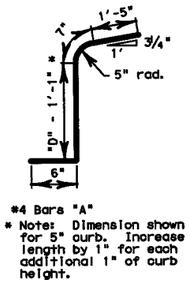

GENERAL NOTES

1. All concrete shall be Class "A".
2. Chamfer all exposed corners ¾" except where otherwise noted.
3. Dimensions related to reinforcing steel are to the centers of bars.
4. Field cut and bend bars as necessary to accommodate storm drain pipe.
5. Cast iron ring and cover shall conform to Item 471.
6. Depths other than those shown may be used whenever necessary, up to a maximum of 10'. Quantities for other depths limits may be found by interpolation.
7. During Stage 1 construction, inlets will not be constructed above subgrade elevation unless permission is granted by the Engineer.
8. A temporary wood cover shall be installed after Stage 1 is completed, and will remain in place until Stage 2 begins.
9. The location of inlet as shown in the plans refers to the control point at the face of curb and mid-point of the inlet.
10. A sealed ½" expansion joint shall be placed along all vertical faces abutting concrete pavement. Class 3,4,5 or 7 joint sealant shall be used to seal joint.

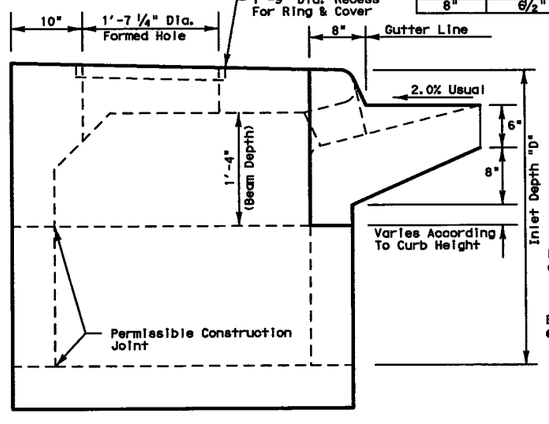

SIDE ELEVATION "A-A"

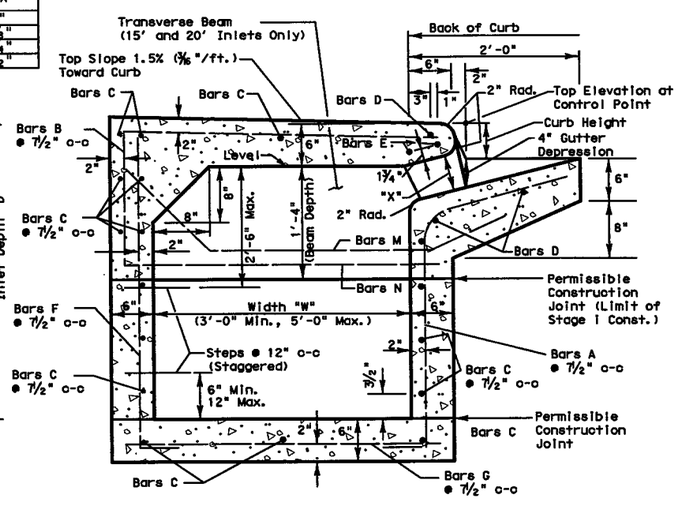

SECTION "B-B"

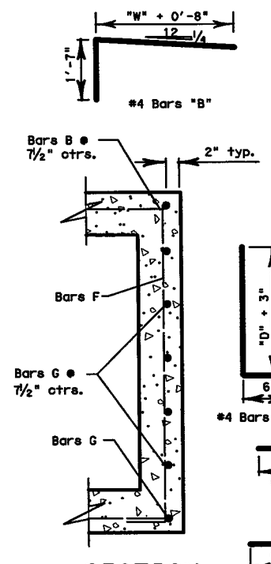

SECTION "C-C"

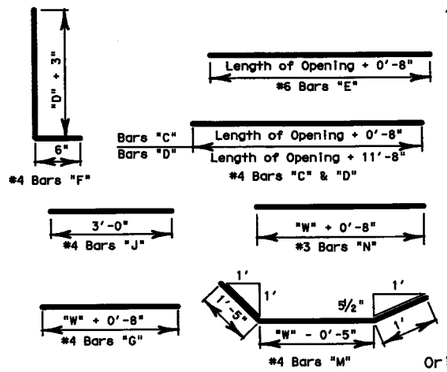

Texas Department of Transportation
FORT WORTH DISTRICT
TYPE 1
CURB INLET
FOR USE W/ 5" TO 8" BARRIER CURB
5',10',15' & 20' OPENINGS
3'-6" TO 10'-0" DEPTHS &
3',4' & 5' WIDTHS

CI(1)-02(FW)

FED. RD. DIV. NO.	PROJECT NO.	SHEET NO.
6	(SEE TITLE SHEET)	1296

STATE	DIST.	COUNTY	
TEXAS	FTW	TARRANT	
CONT.	SECT.	JOB	HIGHWAY NO.
0014	16	255, ETC.	IH 35W

Original Aug. 2002

© 2002 by Texas Department of Transportation; all rights reserved

LEVELS DISPLAYED
1 2 3 7 9 10 11 12 13 14 15

DISCLAIMER:
The use of this standard is governed by the "Texas Engineering Practice Act". The use of any kind is granted by TxDOT for any purpose whatsoever. TxDOT assumes no responsibility for the conversion of this standard to other formats or for incorrect results or damages resulting from its use.

http://www.dot.state.tx.us/ftw/specinfo/standard.htm di102fw.dgn

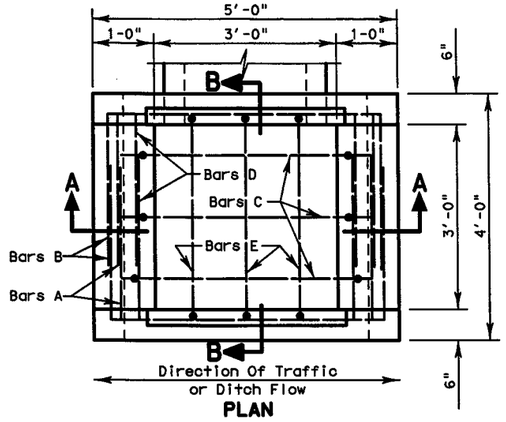

PLAN

TABLE OF QUANTITIES-TYPE 1 INLET

Bar	Size	Spacing	D=3'-0" No.	D=3'-0" Length	D=3'-0" Weight	D=10'-0" No.	D=10'-0" Length	D=10'-0" Weight	D=20'-0" No.	D=20'-0" Length	D=20'-0" Weight	D=30'-0" No.	D=30'-0" Length	D=30'-0" Weight
A	4	-	2	8'-4"	11	2	8'-4"	11	2	8'-4"	11	2	8'-4"	11
B	4	-	2	9'-0"	12	2	9'-0"	12	2	9'-0"	12	2	9'-0"	12
C1	4	12"	3	9'-8"	19	3	23'-8"	47	-	-	-	-	-	-
C2	4	12"	-	-	-	-	-	-	6	22'-6"	90	6	32'-6"	130
D1	4	12"	4	7'-10"	21	18	7'-10"	94	28	7'-10"	146	28	7'-10"	146
D2	4	9"	-	-	-	-	-	-	14	8'-6"	79	40	8'-6"	227
E1	4	12"	3	9'-4"	19	3	23'-4"	47	-	-	-	-	-	-
E2	4	12"	-	-	-	-	-	-	6	22'-4"	89	6	32'-4"	130
Steps	6	12"	1	2'-10"	4	8	2'-10"	34	18	2'-10"	77	28	2'-10"	119
Total Steel - Lbs.					86			245			505			775
Class "A" Concrete - Cu. Yds.					1.223			3.036			6.210			9.830

D=3' to D=15' ⊣ Steel 86.35 Lb + 22.73 Lb/LF; Conc. 1.223 CY + 0.259 CY/LF

D>15' ⊣ Steel 364.49 Lb + 27.03 Lb/LF; Conc. 4.400CY + 0.362 CY/LF

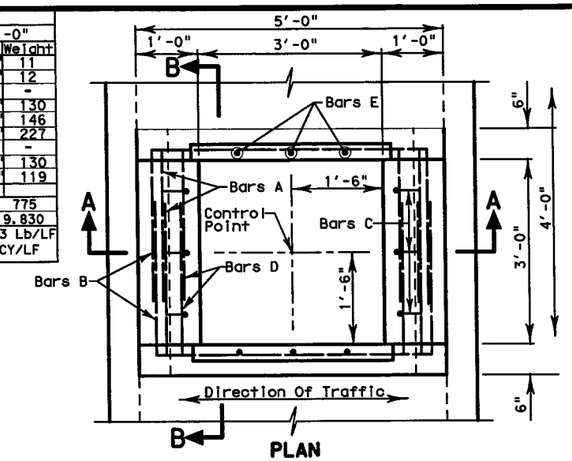

PLAN

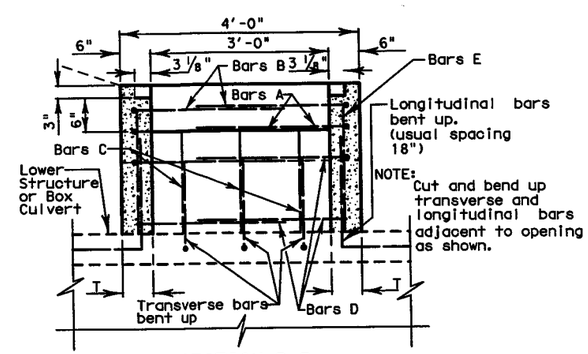

SECTION B-B

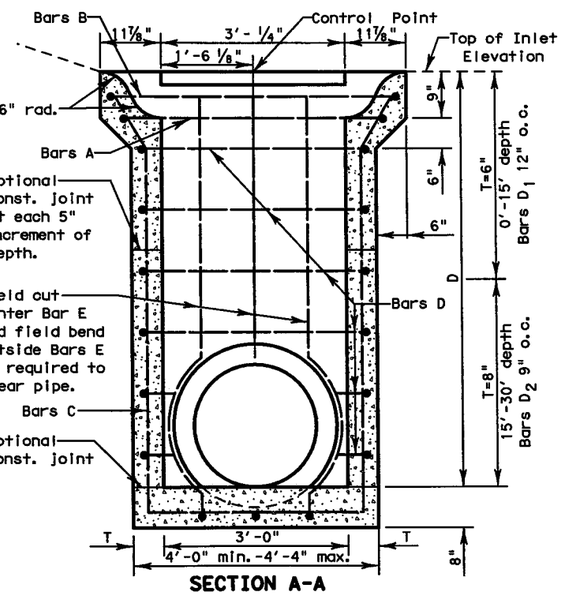

SECTION A-A

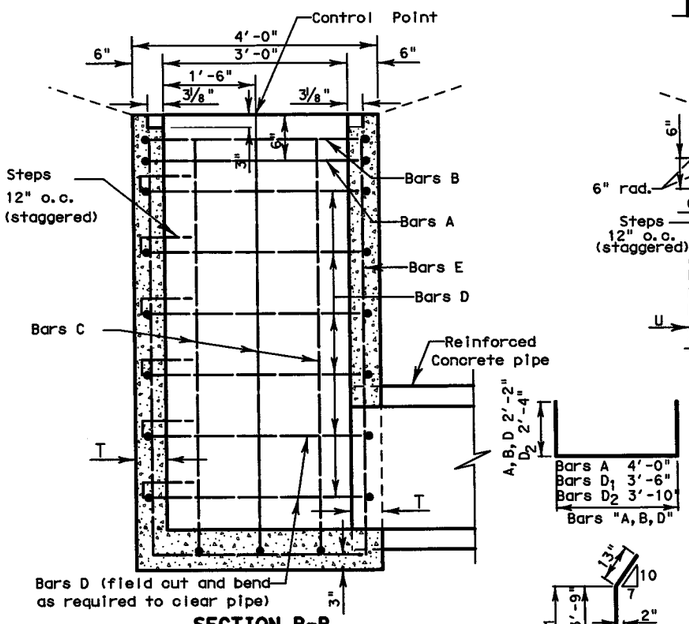

SECTION B-B

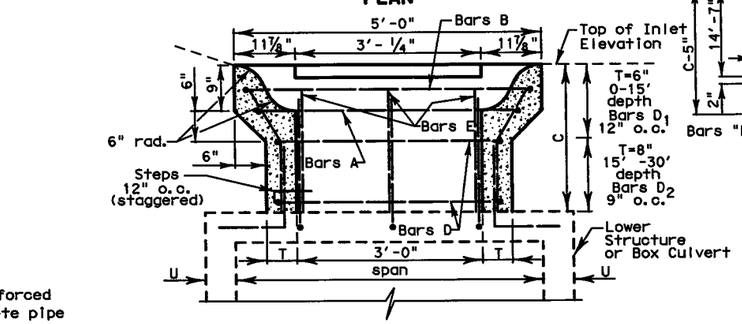

SECTION A-A

TYPE 1-C

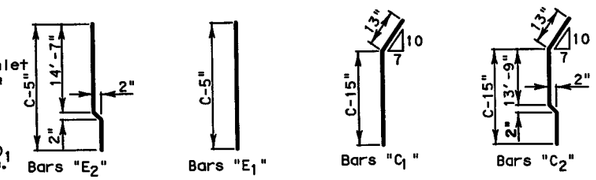

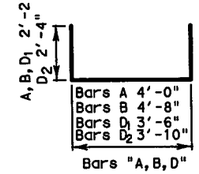

CONCRETE QUANTITY REDUCTION TABLE

Pipe Diameter	Reduction One Pipe (m³Concrete) T=6"	T=8"
15"	0.04	0.05
18"	0.05	0.07
21"	0.08	0.10
24"	0.09	0.12
27"	0.11	0.15
30"	0.14	0.18
33"	0.17	0.22
36"	0.20	0.26

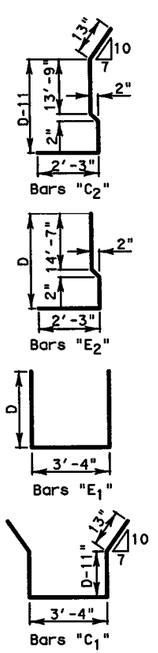

TABLE OF QUANTITIES-TYPE 1-C INLET

Bar	Size	Spacing	C-1'-3" No.	C-1'-3" Length	C-1'-3" Wt.	C-10'-0" No.	C-10'-0" Length	C-10'-0" Wt.	C-20'-0" No.	C-20'-0" Length	C-20'-0" Wt.	C-30'-0" No.	C-30'-0" Length	C-30'-0" Wt.
A	4	-	2	8'-4"	11	2	8'-4"	11	2	8'-4"	11	2	8'-4"	11
B	4	-	2	9'-0"	12	2	9'-0"	12	2	9'-0"	12	2	9'-0"	12
C1	4	12"	-	-	-	6	9'-10"	39	-	-	-	-	-	-
C2	4	12"	-	-	-	-	-	-	6	19'-11"	80	6	29'-11"	120
D1	4	12"	-	-	-	18	7'-10"	94	28	7'-10"	146	28	7'-10"	146
D2	4	9"	-	-	-	-	-	-	14	8'-6"	80	40	8'-6"	227
E1	4	12"	-	-	-	6	9'-7"	38	-	-	-	-	-	-
E2	4	12"	-	-	-	-	-	-	6	19'-8"	79	6	29'-8"	119
Steps	6	12"	-	-	-	8	2'-10"	34	18	2'-10"	77	28	2'-10"	119
Total Steel (Lbs)					23			228			485			754
Class "A" Conc.-Cu. Yds.					0.375			2.641			5.746			9.366

C=1'-3" to C=15' ⊣ Steel 30.84 Lb + 22.73 Lb/LF; Conc. 0.375 CY + 0.259 CY/LF

C >15' ⊣ Steel 343.38 Lb+27.03 Lb/LF; Conc. 3.936 CY + 0.362 CY/LF

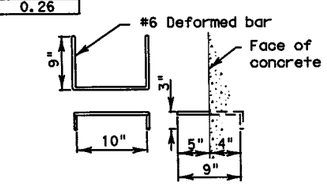

STEP DETAIL

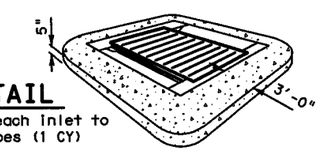

RIPRAP DETAIL

Riprap to be placed at each inlet to conform to adjacent slopes (1 CY)

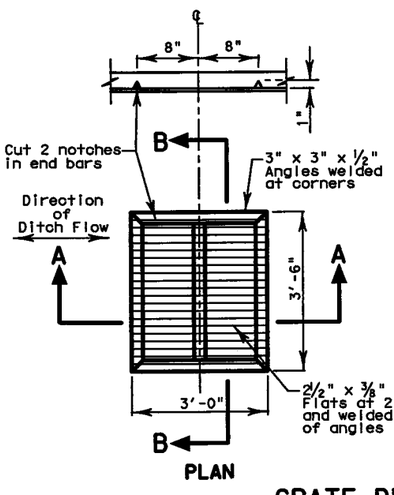

PLAN

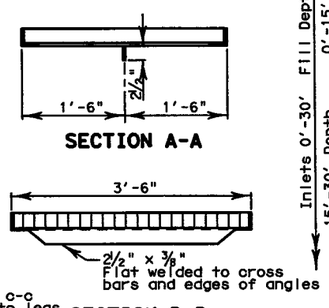

SECTION B-B

GRATE DETAIL

TYPE 1

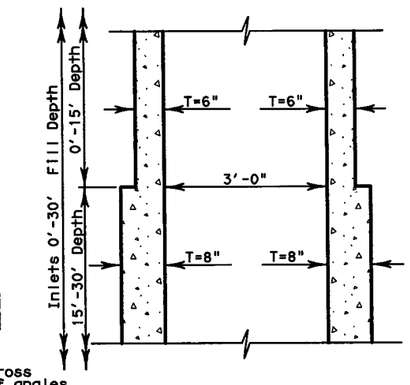

TYPICAL SECTION

Showing transition section from wall thickness of 6" to 8" Type "E" and Type "F" inlets

GENERAL NOTES

1. All concrete shall be Class "A".
2. All dimensions relating to reinforcing steel are to centers of bars. Reinforcing steel shall be placed with the centers of outside layers of bars 3" from the concrete surface where the wall thickness, T, is 6" and shall be placed with the centers of outside layers of bars 4" from the concrete surface where the wall thickness, T, is 8" unless otherwise noted.
3. Grate shall conform to Item 471.
4. Location of inlet as shown in the plans refers to control point shown on this sheet. Inlet shall be aligned so that grate vanes are parallel to ditch flow. For type 1-C structures not on culverts, lower structure may be positioned as required to align with top structure, storm drain pipes, or other adjacent structures.
5. When used with junction box, measure and pay for drop inlet and junction box separately.

REVISIONS: 10/09-Added note to pay for junction box separately

Texas Department of Transportation
FORT WORTH DISTRICT

© 2002 by Texas Department of Transportation; All Rights Reserved

DROP INLET DETAILS
TYPES 1 & 1-C
DI-1-02 (FW)

ORIG DRAW DATE: 8/02	DESIGN: TXDOT	FED. REG.	STATE	PROJ NO.			HIGHWAY
	CHECKED: TXDOT	6	TEXAS	(SEE TITLE SHEET)			IH 35W
	DRAWN: TXDOT	DISTRICT	COUNTY	CONTROL	SECTION	JOB	SHEET
	CHECKED: TXDOT	FTW	TARRANT	0014	16	255	1297

LEVELS DISPLAYED 1 2 3 7

DISCLAIMER:
The use of this standard is governed by the "Texas Engineering Practice Act". No warranty is made by TxDOT for purposes whatsoever. TxDOT assumes no responsibility for the conversion of this standard to other formats or for incorrect results or damages resulting from its use.

https://www.dot.state.tx.us/ftw/specinfo/standard.htm gi102fw.dgn

LEVELS DISPLAYED			
1	2	3	7

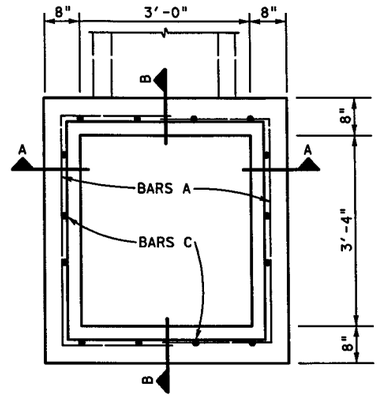

PLAN

TABLE OF QUANTITIES-TYPE 1 INLET 'D' = 4'-0"									
BARS A @ 12" ±		BARS B-1 @ 12 ±		BARS B-2 @ 12 ±		BARS C @ 12 ±		STEPS @12 ±(#6)	
NO.	LGTH.	NO.	LGTH.	NO.	LGTH.	NO.	LGTH.	NO.	LGTH.
10	8'-10"	3	6'-6"	3	6'-10'	12	3'-9½"	3	2'-10"
TOTAL STEEL							129.00 LBS.		
TOTAL CONCRETE							1.97 C.Y.		
ADDITIONAL STEEL P.L.F.							24.07 LBS.		
ADDITIONAL CONC. P.L.F.							0.379 C.Y.		

CONCRETE REDUCTION ONE PIPE	
Pipe DIA.	C.Y. CONC.
18"	0.07
21"	0.10
24"	0.12
27"	0.15
30"	0.18
33"	0.22
36"	0.26

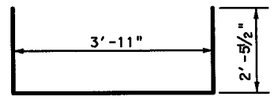

BARS A

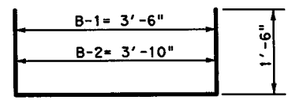

BARS B-1 & B-2

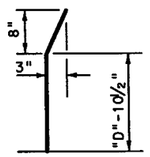

BARS C

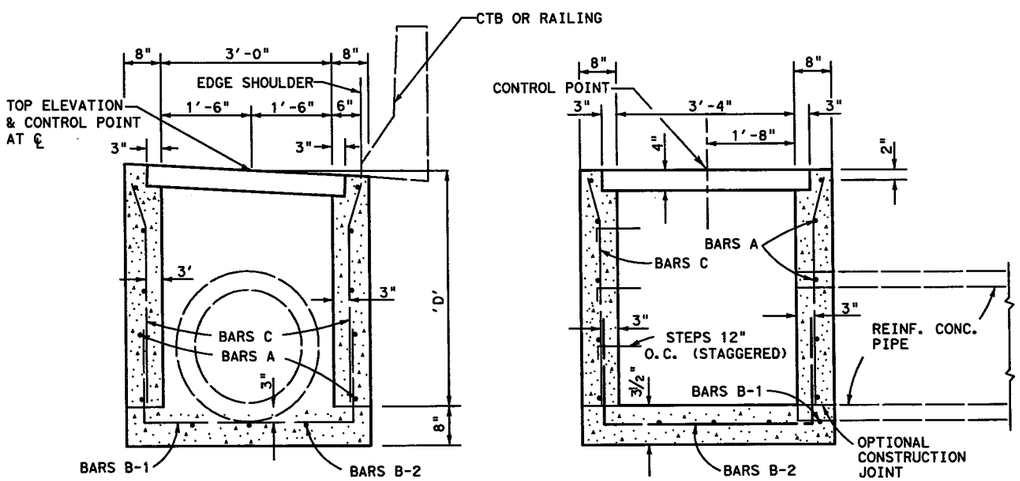

SECTION A-A

SECTION B-B

TYPE 1 STRUCTURE

TABLE OF QUANTITIES-TYPE 2 INLET 'C' = 1'-6"							
BARS A @ 12" ±				BARS C @ 12' ±		STEPS @12' ±(#6)	
NO.	LGTH.	NO.	LGTH.	NO.	LGTH.	NO.	LGTH.
6	8'-10"			12	1'-3½"	1	2'-10"
TOTAL STEEL							50.00 LBS.
TOTAL CONC.							0.53 C.Y.
ADDITIONAL STEEL P.L.F.							24.07 LBS.
ADDITIONAL CONC. P.L.F.							0.379 C.Y.

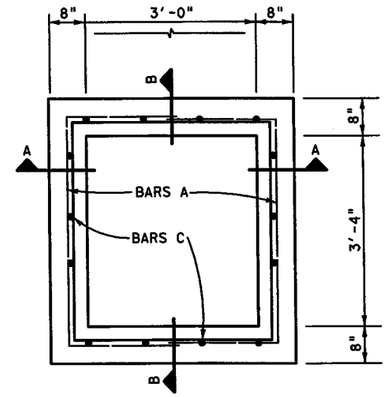

PLAN

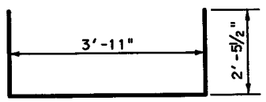

BARS A

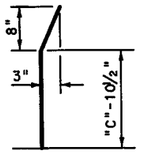

BARS C

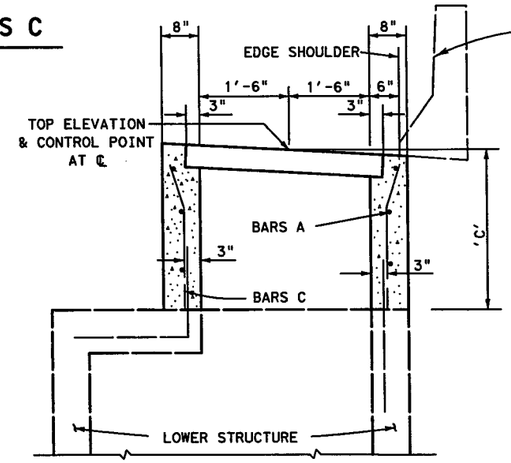

SECTION A-A

SECTION B-B

TYPE 1-C STRUCTURE

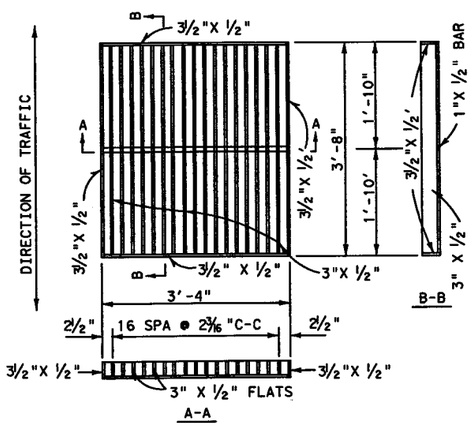

GRATE DETAIL

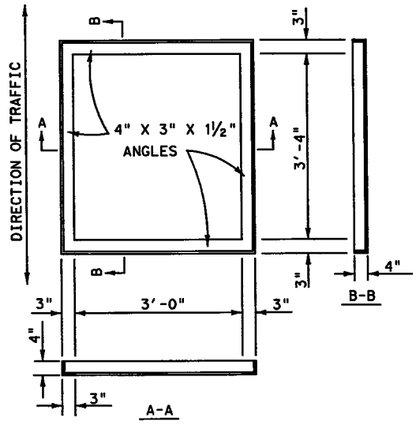

FRAME DETAIL

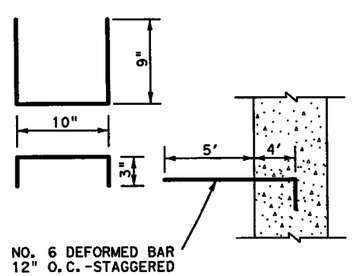

STEPS

GENERAL NOTES:

1. ALL CONCRETE SHALL BE CLASS "A".
2. ALL REINFORCING STEEL EXCEPT STEPS SHALL BE NO. 4 BARS. DIMENSIONS RELATING TO STEEL ARE TO CENTERS OF BARS. FIELD CUT AND BEND BARS AS REQUIRED TO ACCOMMODATE TIES TO LOWER STRUCTURE AND TO CLEAR PIPES.
3. LOCATION OF INLET AS SHOWN IN THE PLANS REFERS TO CONTROL POINT SHOWN ON THIS SHEET. INLET SHALL BE ALIGNED SO THAT GRATE VANES ARE PARALLEL TO DIRECTION OF TRAFFIC. FOR TYPE 1-C STRUCTURES NOT ON CULVERTS, LOWER STRUCTURE MAY BE POSITIONED AS REQUIRED TO ALIGN WITH TOP STRUCTURE, STORM DRAIN PIPES, OR OTHER ADJACENT STRUCTURES.
4. WHEN USED WITH JUNCTION BOX, MEASURE AND PAY FOR GRATED INLET AND JUNCTION BOX SEPARATELY.
5. CONSTRUCT TOP TO CONFORM TO SLOPE OF PAVEMENT.
6. GRATE AND FRAME SHALL CONFORM TO ITEM 471.
7. NOT TO BE USED IN OR ADJACENT TO AREA DESIGNATED FOR PEDESTRIAN ACCESS.
8. INLET TOP MAY BE CAST MONOLITHICALLY WITH CONCRETE PAVEMENT. IF NOT PLACED MONOLITHICALLY, A SEALED ½" EXPANSION JOINT SHALL BE PLACED AROUND THE TOP OF THE STRUCTURE, TO THE DEPTH OF CONCRETE PAVEMENT. CLASS 3, 4, 5 OR 7 JOINT SEALANT SHALL BE USED TO SEAL JOINT.

REVISIONS:
10/09-Added note to pay for junction box separately

Texas Department of Transportation
FORT WORTH DISTRICT
© 2002 by Texas Department of Transportation; All Rights Reserved

GRATED INLET DETAILS
TYPES 1 & 1-C
GI-1-02 (FW)

ORIG DRAW DATE: 8/02

DESIGN: TXDOT	FED. REG.	STATE	PROJ NO.			HIGHWAY
CHECKED: TXDOT	6	TEXAS	(SEE TITLE SHEET)			IH 35W
DRAWN: TXDOT	DISTRICT	COUNTY	CONTROL	SECTION	JOB	SHEET
CHECKED: TXDOT	FTW	TARRANT	0014	16	255	1298

DISCLAIMER:
The use of this standard is governed by the "Texas Engineering Practice Act". No warranty of any kind is made by TxDOT for any purpose whatsoever. TxDOT assumes no responsibility for the conversion of this standard to other formats or for incorrect results or damages resulting from its use.

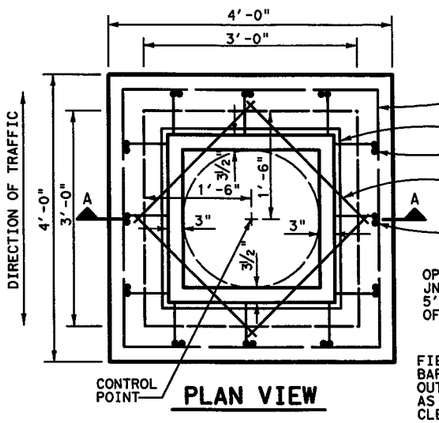

PLAN VIEW

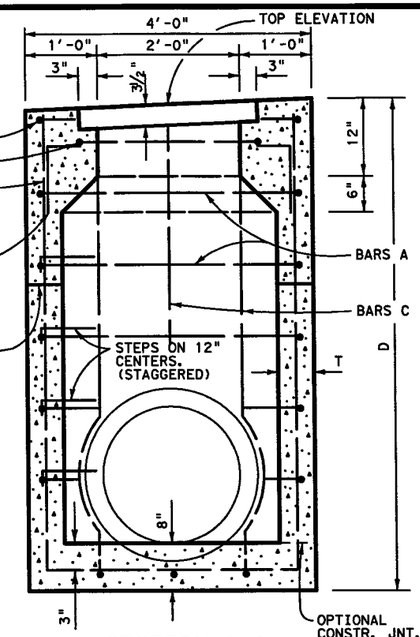

SECTION A-A

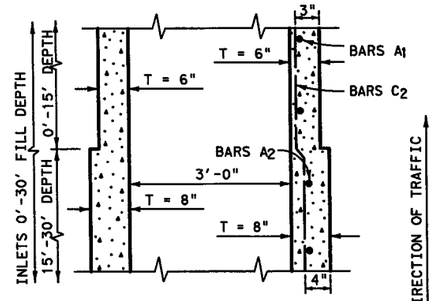

TYPICAL SECTION

SHOWING TRANSITION SECTION FROM WALL THICKNESS OF 6" TO 8"

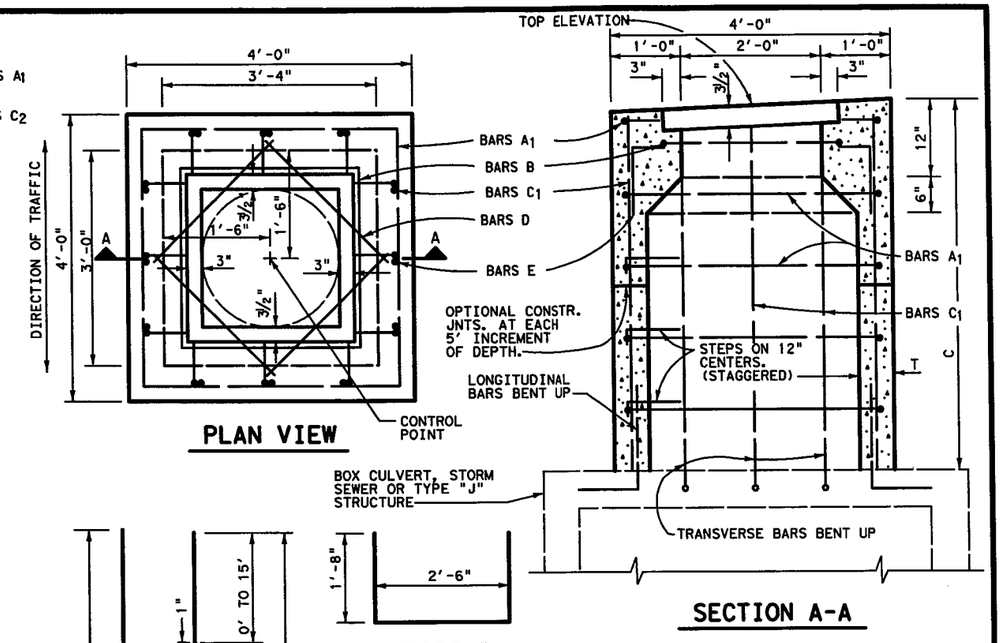

PLAN VIEW

SECTION A-A

NOTE: CUT AND BEND UP TRANSVERSE AND LONGITUDINAL BARS ADJACENT TO OPENING AS SHOWN.

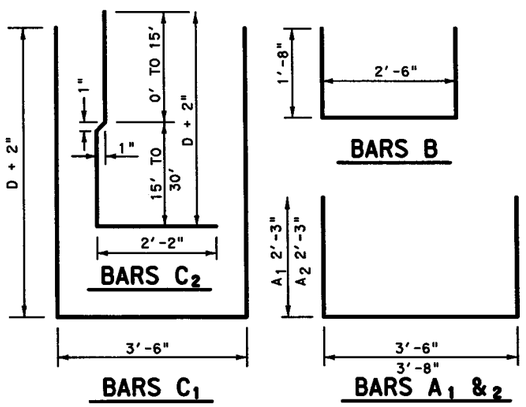

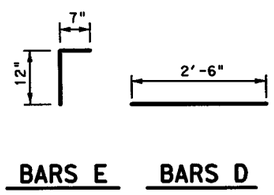

TYPE 2 STRUCTURE

PIPE DIA.	CONCRETE QUANTITY REDUCTION TABLE	
	T = 6"	T = 8"
15"	0.04	0.05
18"	0.05	0.07
21"	0.08	0.10
24"	0.09	0.12
27"	0.11	0.15
30"	0.14	0.18
33"	0.17	0.22
36"	0.20	0.26

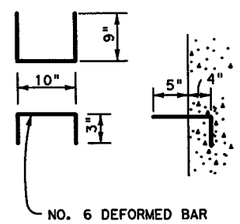

STEPS

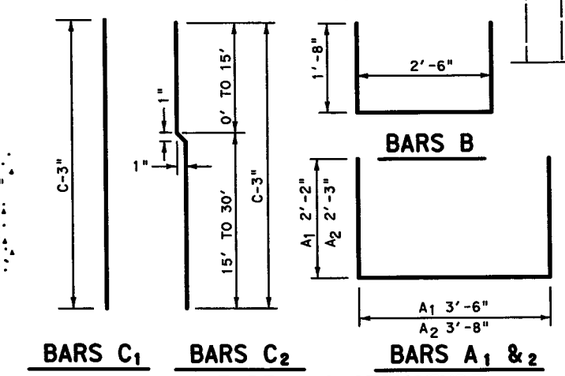

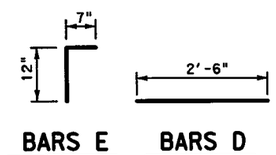

TYPE 2-C STRUCTURE

TABLE OF QUANTITIES-TYPE 2 INLET																	
BARS	SPAC.	D = 3'-0"			D = 4'-0"			D = 10'-0"			D = 20'-0"			D = 30'-0"			
		NO.	LNTH.	WT.	NO.	LNTH.	WT.	NO.	LNTH.	WT.	NO.	LNTH.	WT.	NO.	LNTH.	WT.	
A1	12"	6	7'-10"	31	8	7'-10"	42	20	7'-10"	105	30	7'-10"	157	30	7'-10"	157	
A2	12"										10	8'-2"	55	30	8'-2"	164	
B	-	2	5'-10"	8	2	5'-10"	8	2	5'-10"	8	2	5'-10"	8	2	5'-10"	8	
C1	12"	6	9'-9"	39	6	11'-9"	47	6	23'-9"	95							
C2	12"										12	22'-4"	179	12	32'-4"	259	
D	-	4	2'-6"	7	4	2'-6"	7	4	2'-6"	7	4	2'-6"	7	4	2'-6"	7	
E	-	12	1'-7"	13	12	1'-7"	13	12	1'-7"	13	12	1'-7"	13	12	1'-7"	13	
STEPS	12"	1	2'-10"	4	2	2'-10"	9	8	2'-10"	34	18	2'-10"	77	28	2'-10"	119	
TOTAL STEEL - LBS.			102			126			262			496			727		
CLASS "A" CONC. - CU. YDS 1.44						1.70			3.25			6.37			10.01		
D = 3' TO D = 15' LBS. STEEL 120 = 22.75 LB/LF CU. YDS. CONC. 1.44 + .259 CY/LF								D = 15' TO D = 30' LBS. STEEL 374 = 23.19 LB/LF CU. YDS. CONC. 4.55 + .364 CY/LF									

TABLE OF QUANTITIES-TYPE 2-C INLET																	
BARS	SPAC.	C = 1'-6"			C = 2'-0"			C = 10'-0"			C = 20'-0"			C = 30'-0"			
		NO.	LNTH.	WT.	NO.	LNTH.	WT.	NO.	LNTH.	WT.	NO.	LNTH.	WT.	NO.	LNTH.	WT.	
A1	12"	4	7'-10"	21	4	7'-10"	21	20	7'-10"	105	30	7'-10"	157	30	7'-10"	157	
A2	12"										10	8'-2"	55	30	8'-2"	164	
B	-	2	5'-10"	8	2	5'-10"	8	2	5'-10"	8	2	5'-10"	8	2	5'-10"	8	
C1	12"				12	1'-9"	14	12	9'-9"	78							
C2	12"										12	19'-6"	158	12	29'-6"	238	
D	-	4	2'-6"	7	4	2'-6"	7	4	2'-6"	7	4	2'-6"	7	4	2'-6"	7	
E	12"	12	1'-7"	13	12	1'-7"	13	12	1'-7"	13	12	1'-7'	13	12	1'-7'	13	
STEPS	12"							8	2'-10"	34	18	2'-10"	77	28	2'-10"	119	
TOTAL STEEL - LBS.			49			63			245			475			706		
CLASS "A" CONC. - CU. YDS. 0.65						0.78			2.85			5.97			9.61		
C = 1'-6" TO C = 15' LBS. STEEL 60 = 22.75 LB/LF CU. YDS. CONC. 0.65 + .259 CY/LF								C = 15' TO C = 30' LBS. STEEL 358 = 23.19 LB/LF CU. YDS. CONC. 4.15 + .364 CY/LF									

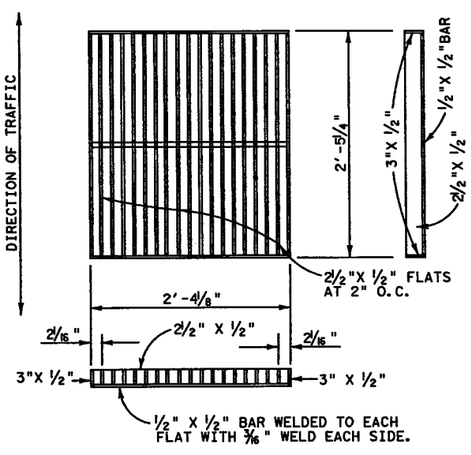

GRATE DETAIL

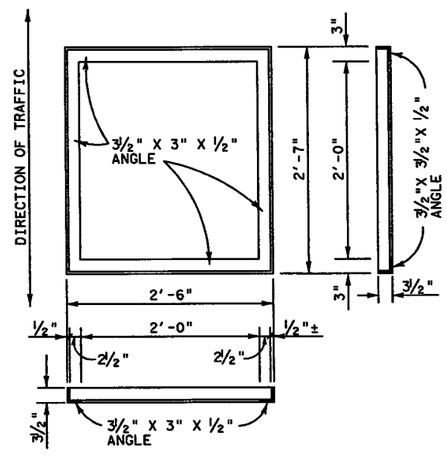

FRAME DETAIL

GENERAL NOTES:

1. ALL CONCRETE SHALL BE CLASS "A".
2. ALL DIMENSIONS RELATING TO REINFORCING STEEL ARE TO CENTERS OF BARS. REINFORCING STEEL SHALL BE PLACED WITH THE CENTERS OF OUTSIDE LAYERS OF BARS 3" FROM THE CONCRETE SURFACE WHERE THE WALL THICKNESS, T, IS 6" AND SHALL BE PLACED WITH THE CENTERS OF OUTSIDE LAYERS OF BARS 4" FROM THE CONCRETE SURFACE WHERE THE WALL THICKNESS, T, IS 8" UNLESS OTHERWISE NOTED.
3. GRATE AND FRAME SHALL CONFORM TO ITEM 471.
4. CONSTRUCT TOP TO CONFORM TO SLOPE OF PAVEMENT SURFACE.
5. LOCATION OF INLET AS SHOWN IN THE PLANS REFERS TO CONTROL POINT SHOWN ON THIS SHEET. INLETS SHALL BE ALIGNED SO THAT GRATE VANES ARE PARALLEL TO DIRECTION OF TRAFFIC. FOR TYPE 2-C STRUCTURES NOT ON CULVERTS, LOWER STRUCTURE MAY BE POSITIONED AS REQUIRED TO ALIGN WITH TOP STRUCTURE, STORM DRAIN PIPES OR OTHER ADJACENT STRUCTURE.
6. WHEN USED WITH JUNCTION BOX, MEASURE AND PAY FOR GRATED INLET AND JUNCTION BOX SEPARATELY.
7. NOT TO BE USED IN OR ADJACENT TO AREAS DESIGNATED FOR PEDESTRIAN ACCESS.
8. INLET TOP MAY BE CAST MONOLITHICALLY WITH CONCRETE PAVEMENT. IF NOT PLACED MONOLITHICALLY, A SEALED 1/2" EXPANSION JOINT SHALL BE PLACED AROUND THE TOP OF THE INLET, TO THE DEPTH OF CONCRETE PAVEMENT. CLASS 3,4,5 OR 7 JOINT SEALANT SHALL BE USED TO SEAL JOINT.

REVISIONS:
10/09-Added note to pay for junction box separately

Texas Department of Transportation
FORT WORTH DISTRICT
© 2002 by Texas Department of Transportation; All Rights Reserved

GRATED INLET DETAILS
TYPES 2 AND 2-C
GI-2-02 (FW)

ORIG DRAW DATE: 8/02	DESIGN: TXDOT	FED. REG.	STATE	PROJ NO.			HIGHWAY
	CHECKED: TXDOT	6	TEXAS	(SEE TITLE SHEET)			IH 35W
	DRAWN: TXDOT	DISTRICT	COUNTY	CONTROL	SECTION	JOB	SHEET
	CHECKED: TXDOT	FTW	TARRANT	0014	16	255	1299

http://www.dot.state.tx.us/ftw/specinfo/standard.htm gi202fw.dgn
LEVELS DISPLAYED 1 2 3 7

DISCLAIMER:
The use of this standard is governed by the "Texas Engineering Practice Act". No warranty of any kind is made by TxDOT for any purpose whatsoever. TxDOT assumes no responsibility for the conversion of this standard to other formats or for incorrect results or damages resulting from its use.

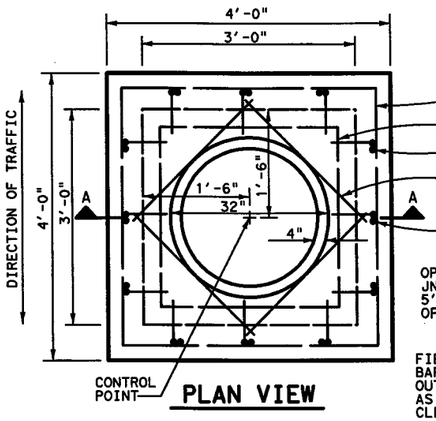

PLAN VIEW

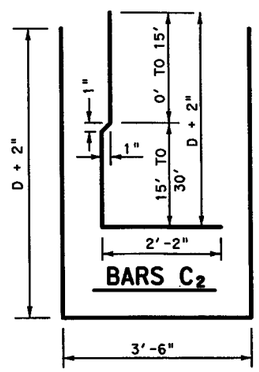

BARS C_2 BARS C_1

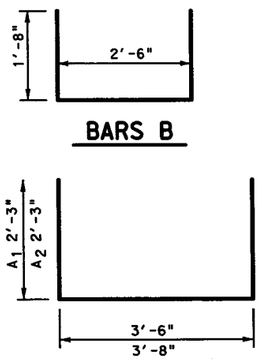

BARS B BARS A_1 & $_2$

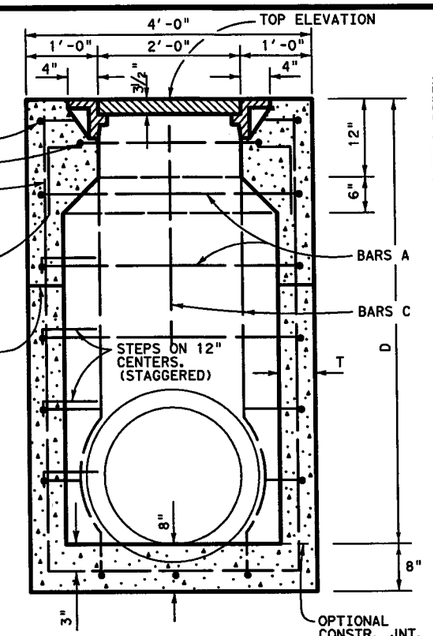

SECTION A-A

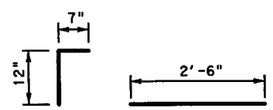

BARS E BARS D

PIPE DIA.	CONCRETE QUANTITY REDUCTION TABLE	
	T = 6"	T = 8"
15"	0.04	0.05
18"	0.05	0.07
21"	0.08	0.10
24"	0.09	0.12
27"	0.11	0.15
30"	0.14	0.18
33"	0.17	0.22
36"	0.20	0.26

TYPE 1 STRUCTURE

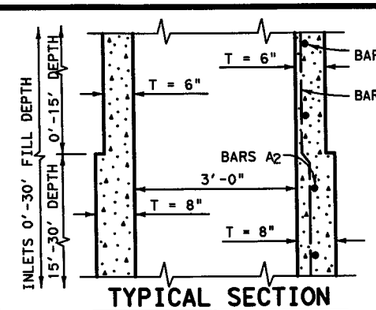

TYPICAL SECTION

SHOWING TRANSITION SECTION FROM WALL THICKNESS OF 6" TO 8"

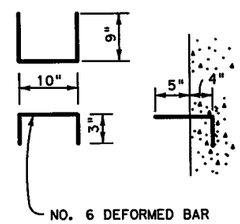

STEPS

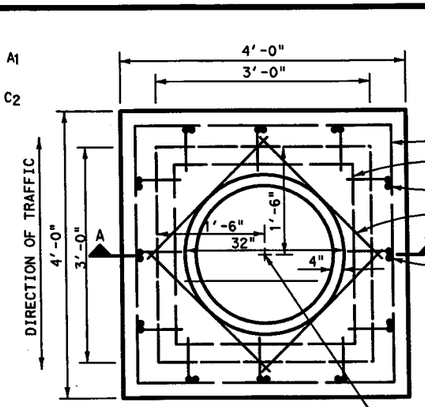

PLAN VIEW

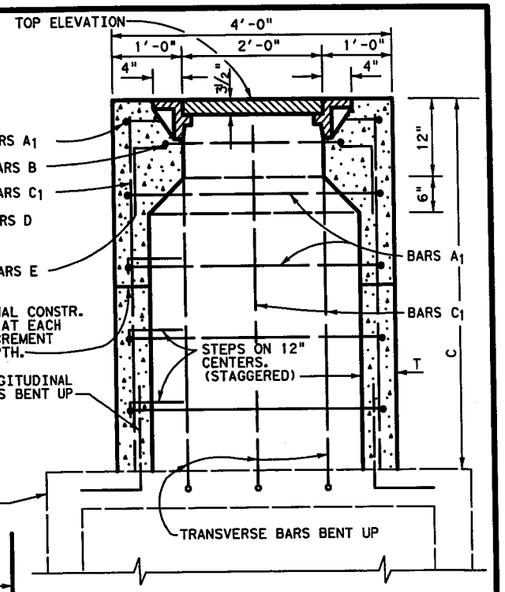

SECTION A-A

NOTE: CUT AND BEND UP TRANSVERSE AND LONGITUDINAL BARS ADJACENT TO OPENING AS SHOWN.

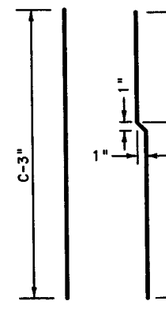

BARS C_1

BARS C_2

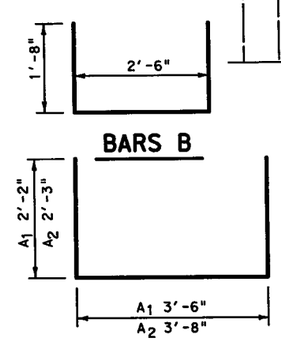

BARS B BARS A_1 & $_2$

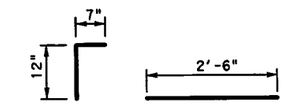

BARS E BARS D

TYPE 1-C STRUCTURE

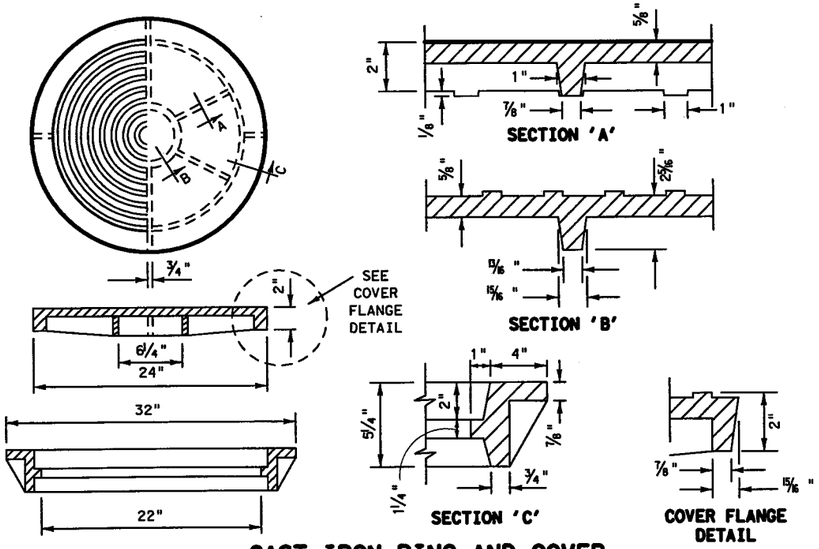

CAST IRON RING AND COVER

TABLE OF QUANTITIES-TYPE 1 MANHOLE															
BARS	SIZE	SPAC.	D = 4'-0"			D = 10'-0"			D = 20'-0"			D = 30'-0"			
			NO.	LNTH.	WT.	NO.	LNTH.	WT.	NO.	LNTH.	WT.	NO.	LNTH.	WT.	
A_1	No. 4	12"	8	7'-10"	42	20	7'-10"	105	30	7'-10"	157	30	7'-10"	157	
A_2	No. 4	12"							10	8'-2"	55	30	8'-2"	164	
B	No. 4	-	2	5'-10"	8	2	5'-10"	8	2	5'-10"	8	2	5'-10"	8	
C_1	No. 4	12"	6	11'-9"	47	6	23'-9"	95							
C_2	No. 4	12"							12	22'-4"	179	12	32'-4"	259	
D	No. 4	-	4	2'-6"	7	4	2'-6"	7	4	2'-6"	7	4	2'-6"	7	
E	No. 4	-	12	1'-7"	13	12	1'-7"	13	12	1'-7"	13	12	1'-7"	13	
STEPS	No. 6	12"	2	2'-10"	9	8	2'-10"	34	18	2'-10"	77	28	2'-10"	119	
TOTAL STEEL - LBS.					126			262			496			727	
CLASS "A" CONC.-CU. YDS.					1.70			3.25			6.37			10.01	
D = 3' TO D = 15' LBS. STEEL 102 + 22.75 LB/LF CU. YDS. CONC. 1.44 + 0.259 CY/LF								D = 15' TO D = 30' LBS. STEEL 374 + 23.19 LB/LF CU. YDS. CONC. 4.55 + 0.364 CY/LF							

TABLE OF QUANTITIES-TYPE 1-C MANHOLE															
BARS	SIZE	SPAC.	C = 1'-6"			C = 10'-0"			C = 20'-0"			C = 30'-0"			
			NO.	LNTH.	WT.	NO.	LNTH.	WT.	NO.	LNTH.	WT.	NO.	LNTH.	WT.	
A_1	No. 4	12"	4	7'-10"	21	20	7'-10"	105	30	7'-10"	157	30	7'-10"	157	
A_2	No. 4	12"							10	8'-2"	55	30	8'-2"	164	
B	No. 4	-	2	5'-10"	8	2	5'-10"	8	2	5'-10"	8	2	5'-10"	8	
C_1	No. 4	12"				12	9'-9"	78							
C_2	No. 4	12"							12	19'-6"	158	12	29'-6"	238	
D	No. 4	-	4	2'-6"	7	4	2'-6"	7	4	2'-6"	7	4	2'-6"	7	
E	No. 4	12"	12	1'-7"	13	12	1'-7"	13	12	1'-7"	13	12	1'-7"	13	
STEPS	No. 6	12"				8	2'-10"	34	18	2'-10"	77	28	2'-10"	119	
TOTAL STEEL - LBS.					49			245			475			706	
CLASS "A" CONC. - CU. YDS.					0.65			2.85			5.97			9.61	
C = 1'-6" TO C = 15' LBS. STEEL 60 + 22.75 LB/LF CU. YDS. CONC. 0.65 + 0.259 CY/LF								C = 15' TO C = 30' LBS. STEEL 358 + 23.19 LB/LF CU. YDS. CONC. 4.15 + 0.364 CY/LF							

GENERAL NOTES:

1. ALL CONCRETE SHALL BE CLASS "A".
2. ALL DIMENSIONS RELATING TO REINFORCING STEEL ARE TO CENTERS OF BARS. REINFORCING STEEL SHALL BE PLACED WITH THE CENTERS OF OUTSIDE LAYERS OF BARS 3" FROM THE CONCRETE SURFACE WHERE THE WALL THICKNESS, T, IS 6" AND SHALL BE PLACED WITH THE CENTERS OF OUTSIDE LAYERS OF BARS 4" FROM THE CONCRETE SURFACE WHERE THE WALL THICKNESS, T, IS 8" UNLESS OTHERWISE NOTED.
3. RING AND COVER SHALL CONFORM TO ITEM 471.
4. CONSTRUCT TOP TO CONFORM TO SLOPE OF SURFACE.
5. LOCATION OF MANHOLE AS SHOWN IN THE PLANS REFERS TO CONTROL POINT SHOWN ON THIS SHEET. FOR TYPE 1-C STRUCTURES NOT ON CULVERTS, LOWER STRUCTURE MAY BE POSITIONED AS REQUIRED TO ALIGN WITH TOP STRUCTURE, STORM DRAIN PIPES OR OTHER ADJACENT STRUCTURES.
6. MANHOLE TOP MAY BE CAST MONOLITHICALLY WITH CONCRETE PAVEMENT. IF NOT PLACED MONOLITHICALLY, A SEALED 1/2" EXPANSION JOINT SHALL BE PLACED AROUND THE TOP OF THE MANHOLE STRUCTURE, TO THE DEPTH OF CONCRETE PAVEMENT. CLASS 3,4,5 OR 7 JOINT SEALANT SHALL BE USED TO SEAL JOINT.
7. WHEN USED WITH JUNCTION BOX, MEASURE AND PAY FOR MANHOLE AND JUNCTION BOX SEPARATELY

REVISIONS: 10/09-Added note to pay for junction box separately

Texas Department of Transportation
FORT WORTH DISTRICT

© 2002 by Texas Department of Transportation; All Rights Reserved

STORM DRAIN MANHOLE DETAILS
TYPES 1 & 1-C
MH-1-02 (FW)

ORIG DRAW DATE: 8/02	DESIGN: TXDOT	FED. REG.	STATE	PROJ NO.			HIGHWAY
	CHECKED: TXDOT	6	TEXAS	(SEE TITLE SHEET)			IH 35W
	DRAWN: TXDOT	DISTRICT	COUNTY	CONTROL	SECTION	JOB	SHEET
	CHECKED: TXDOT	FTW	TARRANT	0014	16	255	1300

https://www.dot.state.tx.us/ftw/specinfo/standard.htm mh102fw.dgn
LEVELS DISPLAYED 1 2 3 7

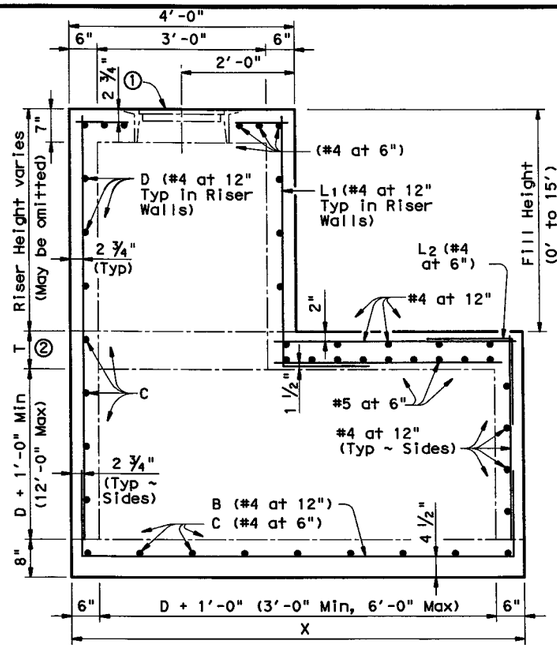

ELEVATION

D = Maximum inside diameter of any Pipe entering the side shown or the opposite side

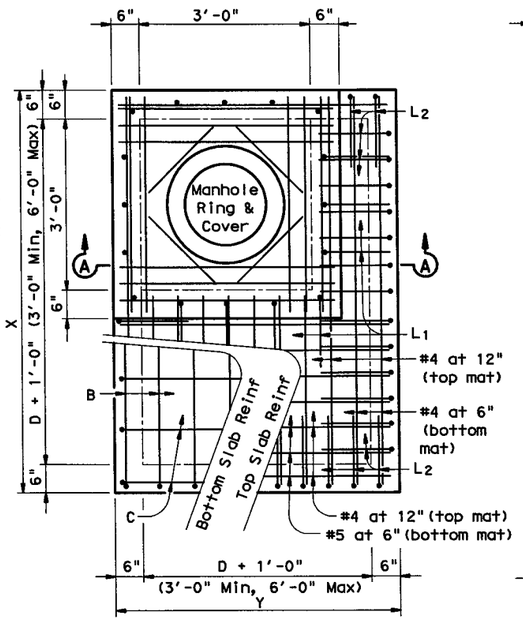

PLAN

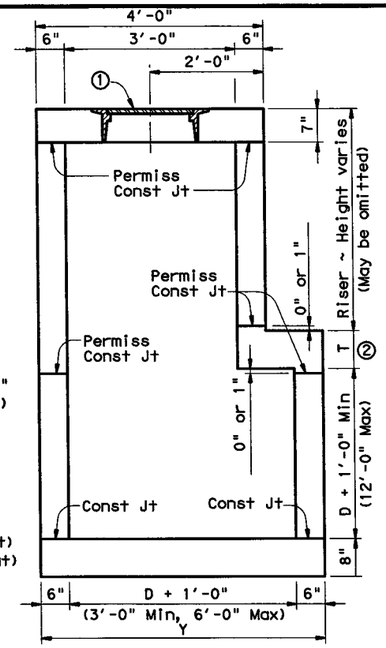

SECTION A-A

MANHOLE WITH CAST-IN-PLACE RISER

① See Ring and Cover Details

② For Fill Height less than or equal to 10', T=8'. For Fill Height between 10' and 15', T=10".

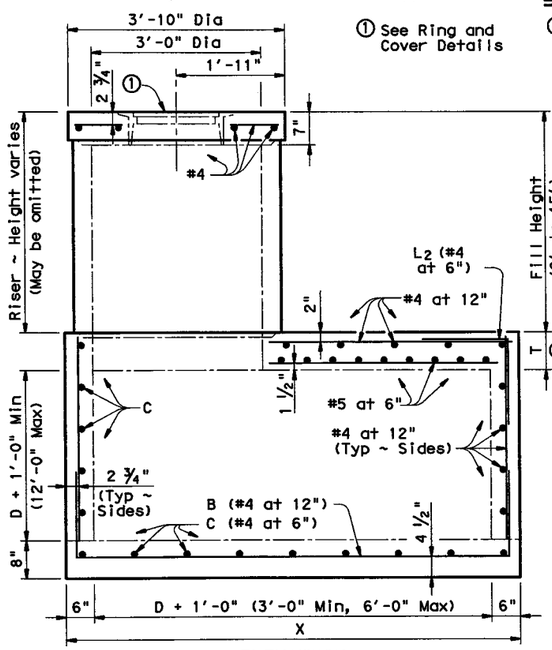

ELEVATION

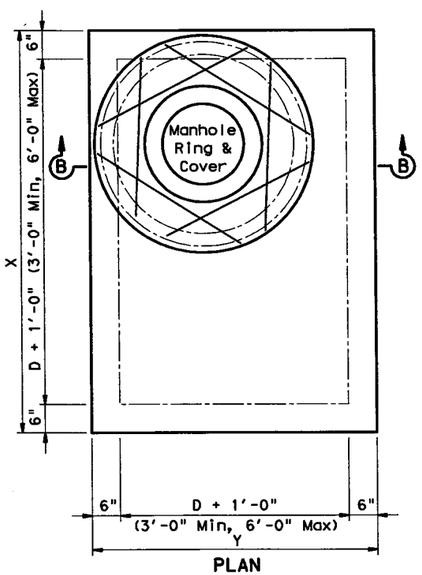

PLAN

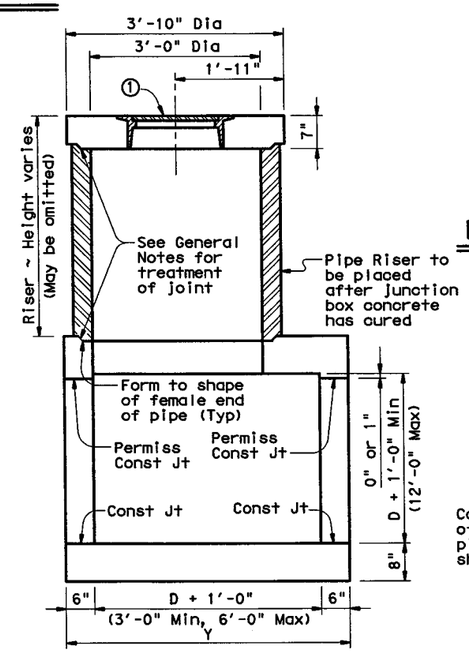

SECTION B-B

OPTIONAL MANHOLE WITH CONCRETE PIPE RISER

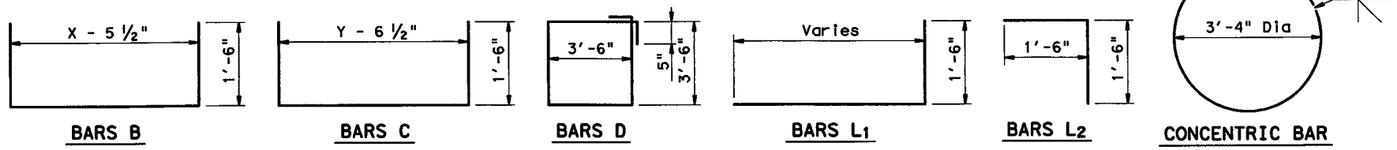

BARS B | BARS C | BARS D | BARS L1 | BARS L2 | CONCENTRIC BAR

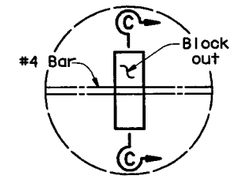

DETAIL "A"

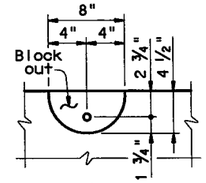

SECTION C-C

LIFTING CATCH

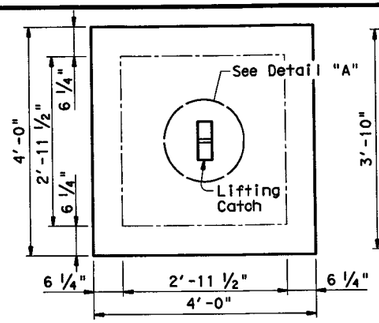

PLAN

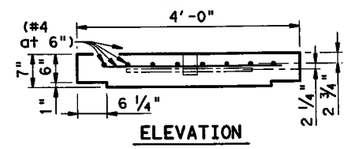

ELEVATION

CAST-IN-PLACE RISER COVER

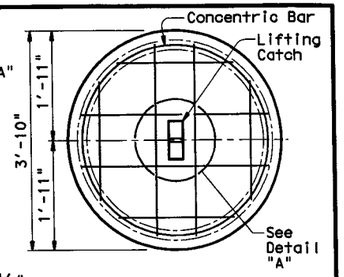

PLAN

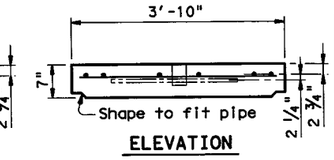

ELEVATION

CONCRETE PIPE RISER COVER

OPTIONAL PRECAST CONCRETE LIFT-OFF COVERS

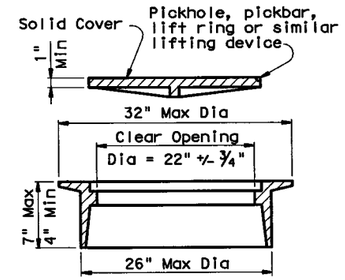

RING AND COVER DETAILS

Approximate Weight = 245 lb

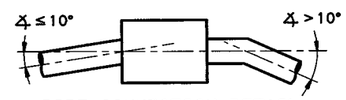

PIPE CONNECTION DETAIL

Connecting pipes should enter within 10° of normal to inlet wall. If necessary, pipe elbow or curved approach alignment should be used to stay within this limit.

GENERAL NOTES:

Unless otherwise shown in the plans, payment will be made for each manhole of the Type M.

When approved, precast inlets with equivalent structural capacity may be furnished. Sealed engineering calculations and drawings shall be submitted for approval prior to construction.

Shop drawings will not be required.

In areas of conflict between reinforcing steel, blockouts, pipes, anchor bolts or other reinforcing steel, the reinforcement shall be bent or adjusted to clear as directed by the Engineer.

The riser may be constructed of reinforced concrete as shown or of Reinforced Concrete Pipe, Class III, in accordance with ASTM Designation C-76. If pipe is used, joints shall conform to the Item "Reinforced Concrete Pipe Culverts". Precast Concrete Lift-Off Cover may be substituted for Ring and Cover.

The riser, either cast-in-place or concrete pipe, may be located in any corner.

All reinforcing steel shall be #4 unless otherwise noted.

Pipes may enter any or all walls. The maximum size of pipe that can be accommodated is 60". More than one pipe may enter a side, subject to the maximum box dimension shown. The clear distance between adjacent pipes should be 9" minimum.

Ring and cover shall conform to the requirements of AASHTO M306, "Standard Specification for Drainage Structure Castings". Materials shall conform to ASTM A48, Class 35B for gray iron castings or ASTM A536, Grade 65-45-12 for ductile iron castings. Aluminum alloy castings shall not be permitted.

All concrete shall be Class "A" (f'c = 3000 psi).

DISCLAIMER:
The use of this standard is governed by the "Texas Engineering Practice Act". No warranty of any kind is made by TxDOT for any purpose whatsoever. TxDOT assumes no responsibility for the conversion of this standard to other formats or for incorrect results or damages resulting from its use.

ACC:

LEVELS DISPLAYED

Texas Department of Transportation
Bridge Division

MANHOLE TYPE M
(JUNCTION BOX WITH ACCESS)
15' MAX FILL

MH-M

FILE: mh-mstde.dgn	DN: TxDOT	CK: TER	DW: MCB		CK: TER/GAF
© TxDOT December 2003	DISTRICT	FEDERAL AID PROJECT			SHEET
REVISIONS	FTW	(SEE TITLE SHEET)			1301
	COUNTY		CONTROL	SECT	JOB	HIGHWAY
	TARRANT		0014	16	255, ETC.	IH 35W

DISCLAIMER:
The use of this standard is governed by the "Texas Engineering Practice Act". No warranty of any kind is made by TxDOT for any purpose whatsoever. TxDOT assumes no responsibility for the conversion of this standard to other formats or for incorrect results or damages resulting from its use.

http://www.dot.state.tx.us/ftw/specinfo/standard.htm set1.dgn

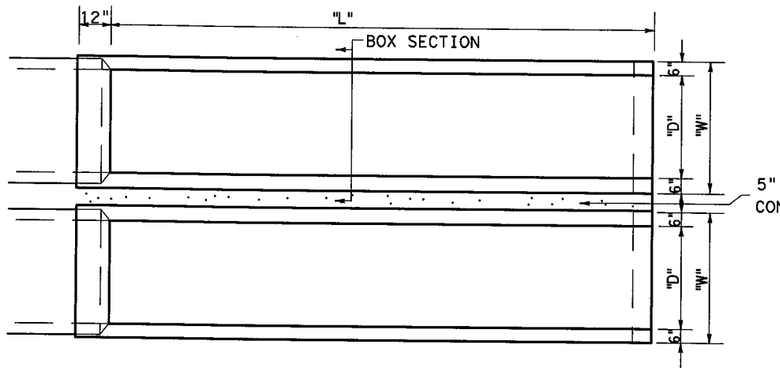

PLAN

MULTIPLE PIPES PLAN
(CROSS DRAINAGE ONLY)*

* FOR MULTIPLE PIPES IN PARALLEL DRAINAGE APPLICATIONS, USE STANDARD SET(3)(FW).

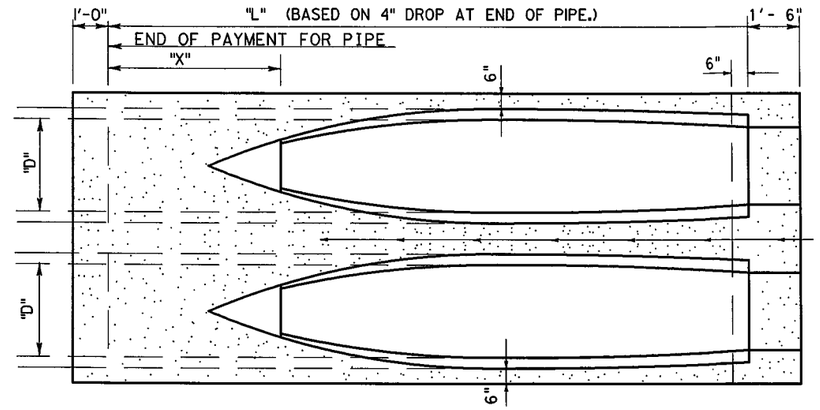

PLAN

MULTIPLE PIPES PLAN
(CROSS DRAINAGE ONLY)*

* FOR MULTIPLE PIPES IN PARALLEL DRAINAGE APPLICATIONS, USE STANDARD SET(3)(FW).

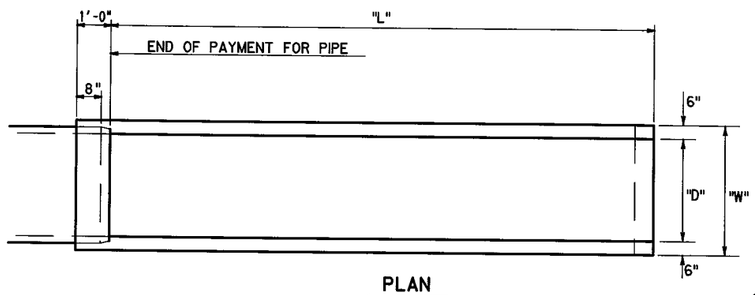

PLAN

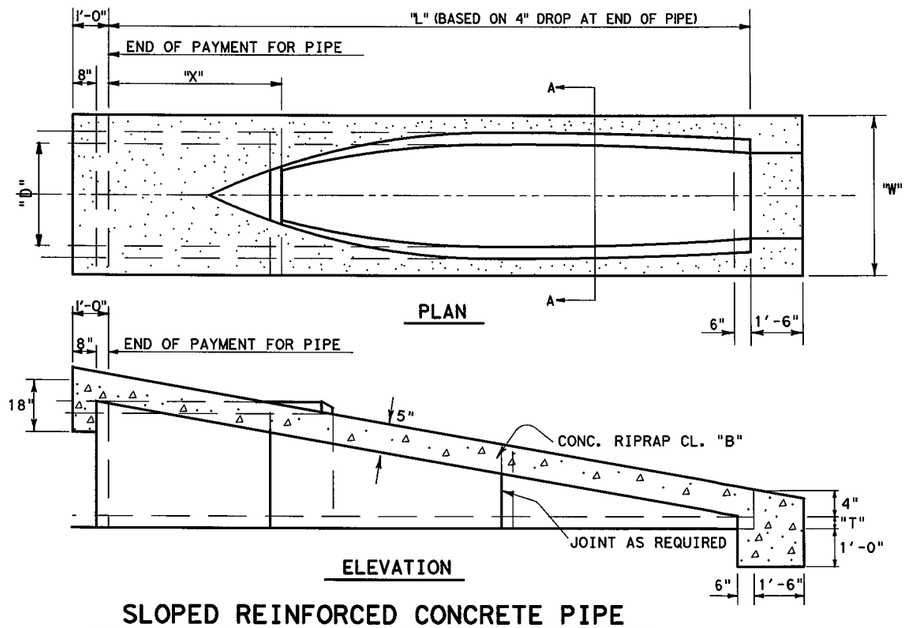

PLAN

ELEVATION

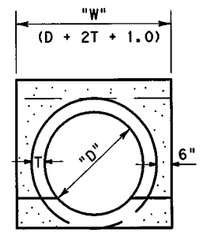

A-A

OPTION ONE

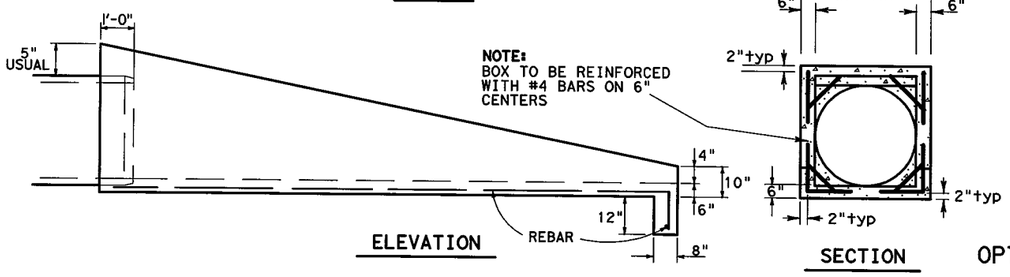

ELEVATION

SECTION

OPTION TWO

SLOPED CLASS "A" CONCRETE BOX

"D"	SLOPE	"L"	"W"	CL. A CONC (CY)	5" CL. B CONC RIPRAP (CY)
18"	3:1	4'-4½"	2'-6"	0.56 (N)	0.01 (N-1)
18"	4:1	6'-2"	2'-6"	0.72 (N)	0.02 (N-1)
18"	6:1	9'-9"	2'-6"	1.06 (N)	0.03 (N-1)
18"	8:1	13'-4"	2'-6"	1.39 (N)	0.04 (N-1)
21"	3:1	5'-2¼"	2'-9"	0.70 (N)	0.03 (N-1)
21"	4:1	7'-3"	2'-9"	0.91 (N)	0.04 (N-1)
21"	6:1	11'-4¼"	2'-9"	1.33 (N)	0.06 (N-1)
21"	8:1	15'-6"	2'-9"	1.75 (N)	0.07 (N-1)
24"	3:1	6'-0"	3'-0"	0.86 (N)	0.05 (N-1)
24"	4:1	8'-4"	3'-0"	1.12 (N)	0.06 (N-1)
24"	6:1	13'-0"	3'-0"	1.64 (N)	0.09 (N-1)
24"	8:1	17'-8"	3'-0"	2.16 (N)	0.12 (N-1)
27"	3:1	6'-9¾"	3'-3"	1.03 (N)	0.07 (N-1)
27"	4:1	9'-5"	3'-3"	1.35 (N)	0.09 (N-1)
27"	6:1	14'-7½"	3'-3"	1.98 (N)	0.13 (N-1)
27"	8:1	19'-10"	3'-3"	2.61 (N)	0.18 (N-1)
30"	3:1	7'-7½"	3'-6"	1.22 (N)	0.09 (N-1)
30"	4:1	10'-6"	3'-6"	1.59 (N)	0.12 (N-1)
30"	6:1	16'-3"	3'-6"	2.35 (N)	0.18 (N-1)
30"	8:1	22'-0"	3'-6"	3.10 (N)	0.24 (N-1)

NOTE: "N"= # OF PIPES.
CONCRETE QUANTITIES ARE SHOWN FOR CONTRACTOR'S INFORMATION ONLY.

SLOPED REINFORCED CONCRETE PIPE

"D"	SLOPE	"T"	"L"	"X"	1 PIPE		2 PIPES		MULTIPLE PIPES N = # OF PIPES	
					"W"	RIPRAP	"W"	RIPRAP	"W" (INCHES)	RIPRAP (CY)
18"	3:1	2½"	5'-1¼"	1'-7¼"	2'-11"	0.48 CY	5'-7"	0.91 CY	32 (N)+3	0.0532+0.430 (N)
18"	4:1	2½"	6'-10½"	2'-2½"	2'-11"	0.54 CY	5'-7"	1.01 CY	32 (N)+3	0.0608+0.475 (N)
18"	6:1	2½"	10'-8½"	3'-5½"	2'-11"	0.64 CY	5'-7"	1.20 CY	32 (N)+3	0.0754+0.560 (N)
18"	8:1	2½"	14'-0¼"	4'-8¼"	2'-11"	0.73 CY	5'-7"	1.37 CY	32 (N)+3	0.0895+0.642 (N)
21"	3:1	2¾"	5'-11"	1'-8"	3'-2½"	0.55 CY	6'-3"	1.06 CY	36.5 (N)+2	0.0379+0.510 (N)
21"	4:1	2¾"	7'-11½"	2'-3½"	3'-2½"	0.61 CY	6'-3"	1.17 CY	36.5 (N)+2	0.0436+0.566 (N)
21"	6:1	2¾"	12'-1"	3'-7"	3'-2½"	0.73 CY	6'-3"	1.40 CY	36.5 (N)+2	0.0546+0.671 (N)
21"	8:1	2¾"	16'-2¼"	4'-10¼"	3'-2½"	0.84 CY	6'-3"	1.61 CY	36.5 (N)+2	0.0655+0.773 (N)
24"	3:1	3"	6'-8¾"	1'-8¾"	3'-6"	0.61 CY	6'-11"	1.21 CY	41 (N)+1	0.0201+0.594 (N)
24"	4:1	3"	9'-0½"	2'-4½"	3'-6"	0.68 CY	6'-11"	1.35 CY	41 (N)+1	0.0233+0.661 (N)
24"	6:1	3"	13'-8½"	3'-8½"	3'-6"	0.82 CY	6'-11"	1.61 CY	41 (N)+1	0.0295+0.790 (N)
24"	8:1	3"	18'-4¼"	5'-0½"	3'-6"	0.95 CY	6'-11"	1.87 CY	41 (N)+1	0.0356+0.915 (N)
27"	3:1	¾"	7'-6½"	1'-9½"	3'-9½"	0.68 CY	7'-7"	1.36 CY	45.5 (N)	0.682 (N)
27"	4:1	¾"	10'-1½"	2'-5½"	3'-9½"	0.76 CY	7'-7"	1.53 CY	45.5 (N)	0.763 (N)
27"	6:1	¾"	15'-4"	3'-10"	3'-9½"	0.92 CY	7'-7"	1.83 CY	45.5 (N)	0.917 (N)
27"	8:1	¾"	20'-6¼"	5'-2¼"	3'-9½"	1.07 CY	7'-7"	2.13 CY	45.5 (N)	1.066 (N)
30"	3:1	¾"	8'-4¼"	1'-10¼"	4'-1"	0.75 CY	8'-3"	1.53 CY	50 (N)-1	-0.022+0.775 (N)
30"	4:1	¾"	11'-2½"	2'-6½"	4'-1"	0.84 CY	8'-3"	1.71 CY	50 (N)-1	-0.026+0.870 (N)
30"	6:1	¾"	16'-11½"	3'-11½"	4'-1"	1.02 CY	8'-3"	2.07 CY	50 (N)-1	-0.033+1.051 (N)
30"	8:1	¾"	22'-8¼"	5'-4¼"	4'-1"	1.19 CY	8'-3"	2.41 CY	50 (N)-1	-0.041+1.228 (N)

NOTE: CONCRETE QUANTITIES ARE SHOWN FOR CONTRACTOR'S INFORMATION ONLY.

Texas Department of Transportation

©2003 by Texas Department of Transportation; all rights reserved

REVISED - JULY 1983 - J.B.C.
REVISED - AUG. 1984 - H.G.O.
REVISED - APR. 1985 - R.O.N.
REVISED - OCT. 1986 - L.J.M.
REVISED - FEB. 1987 - J.A.T.
REVISED - NOV. 1991 - M.J.N.
REVISED - FEB. 1994 - E.R.F.

TYPE II SAFETY END TREATMENT -CROSS OR PARALLEL DRAINAGE- 18" TO 30" PIPES

SET(1)(FW)

DRAWN	FED. RD. DIV. NO.	STATE	FEDERAL AID PROJECT NO.			SHEET NO.
CHECKED	6	TEXAS	255, ETC.			1302
TRACED	STATE DIST. NO.	COUNTY	CONTROL NO.	SECTION NO.	JOB NO.	HIGHWAY NO.
CHECKED	FORT WORTH	TARRANT	0014	16	255	IH 35W

LEVELS DISPLAYED
6
1

DISCLAIMER:
The use of this standard is governed by the "Texas Engineering Practice Act". No warranty of any kind is made by TxDOT for any purpose whatsoever. TxDOT assumes no responsibility for conversions to standard to other formats or for incorrect results or damages resulting from its use.

"D"	SLOPE	"L"	"W"	CL "A" CONC.	5"CL.B CONC RIPRAP (CY)	PIPE RUNNERS LENGTH	PIPE RUNNERS NO.
33"	6:1	17'-10½"	4'-1"	3.32(N)	0.14*(N-1)	3'-11"	10
33"	8:1	24'-2"	4'-1"	4.39(N)	0.18*(N-1)	3'-11"	13
36"	6:1	19'-6"	4'-4"	3.84(N)	0.19*(N-1)	4'-2"	10
36"	8:1	26'-4"	4'-4"	5.07(N)	0.25*(N-1)	4'-2"	14
42"	6:1	22'-9"	4'-10"	4.98(N)	0.31*(N-1)	4'-8"	12
42"	8:1	30'-8"	4'-10"	6.59(N)	0.41*(N-1)	4'-8"	16
48"	6:1	26'-0"	5'-4"	6.27(N)	0.46*(N-1)	5'-2"	14
48"	8:1	35'-0"	5'-4"	8.31(N)	0.61*(N-1)	5'-2"	18
54"	6:1	29'-3"	5'-10"	7.70(N)	0.71*(N-1)	5'-8"	15
54"	8:1	39'-4"	5'-10"	10.22(N)	0.94*(N-1)	5'-8"	20
60"	6:1	32'-6"	6'-4"	9.29(N)	0.87*(N-1)	6'-2"	17
60"	8:1	43'-8"	6'-4"	12.32(N)	1.16*(N-1)	6'-2"	22

NOTE: "N"= # OF CULVERT PIPES

"D"	SLOPE	"T"	"L"	"X"	SINGLE PIPE "W"	SINGLE PIPE CL "B" RIPRAP	MULTIPLE PIPES N=# OF CULVERT PIPES "W" (INCHES)	MULTIPLE PIPES CL "B" RIPRAP (CY)	PIPE RUNNERS LENGTH	PIPE RUNNERS NO.
33"	6:1	3¾"	17'-10½"	3'-4½"	4'-8½"	2.19CY	54.5(N)+2	0.142+2.047(N)	"W-2"	9
33"	8:1	3¾"	24'-2"	4'-10"	4'-8½"	2.69CY	54.5(N)+2	0.182+2.513(N)	"W-2"	11
36"	6:1	4"	19'-6"	3'-6"	5'-0"	2.40CY	59(N)+1	0.076+2.321(N)	"W-2"	9
36"	8:1	4"	26'-4"	5'-0"	5'-0"	2.96CY	59(N)+1	0.097+2.859(N)	"W-2"	12
42"	6:1	4½"	22'-9"	3'-9"	5'-7"	2.83CY	68(N)-1	-0.08+2.916(N)	"W-2"	11
42"	8:1	4½"	30'-8"	5'-4"	5'-7"	3.50CY	68(N)-1	-0.11+3.615(N)	"W-2"	14
48"	6:1	5"	26'-0"	4'-0"	6'-2"	3.29CY	77(N)-3	-0.29+3.577(N)	"W-2"	12
48"	8:1	5"	35'-0"	5'-8"	6'-2"	4.08CY	77(N)-3	-0.37+4.458(N)	"W-2"	16
54"	6:1	5½"	29'-3"	4'-3"	6'-9"	3.77CY	88(N)-7	-0.74+4.518(N)	"W-2"	14
54"	8:1	5½"	39'-4"	6'-0"	6'-9"	4.70CY	88(N)-7	-0.96+5.665(N)	"W-2"	18
60"	6:1	6"	32'-6"	4'-6"	7'-4"	4.28CY	96(N)-8	-0.93+5.214(N)	"W-2"	15
60"	8:1	6"	43'-8"	6'-4"	7'-4"	5.34CY	96(N)-8	-1.21+6.558(N)	"W-2"	20

REQUIRED PIPE RUNNER SIZES FOR GIVEN PIPE YIELD

CULVERT SIZE	35 ksi ASTM A53,TY.E & S GR.B NOM.	OD	ID	42 ksi ASTM A500,GR.B NOM.	OD	ID	52 ksi API 5LX52 NOM.	OD	ID
33" OR 36"	3"XXS 3½"XS	3.500 4.000	2.300 3.364	3"XS 3½"Std	3.500 4.000	2.900 3.548	3"Std.	3.500	3.068
42"	3"XXS 3½"XS 4"Std.	3.500 4.000 4.500	2.300 3.364 4.026	3"XXS 3½"XS 4"Std.	3.500 4.000 4.500	2.300 3.364 4.026	3"XS 3½"Std	3.500 4.000	2.900 3.548
48"	3"XXS 4"XS	3.500 4.500	2.300 3.826	3"XXS 3½"XS 4"Std.	3.500 4.000 4.500	2.300 3.364 4.026	3"XXS 3½"Std	3.500 4.000	2.300 3.548
54"	4"XS 5"Std.	4.500 5.563	3.826 5.047	3"XXS 4"Std.	3.500 4.500	2.300 4.026	3"XXS 3½"XS 4"Std.	3.500 4.000 4.500	2.300 3.364 4.026
60"	4"XS 5"Std.	4.500 5.563	3.826 5.047	4"XS 5"Std.	4.500 5.563	3.826 5.047	3"XXS 3½"XS 4"Std.	3.500 4.000 4.500	2.300 3.364 4.026

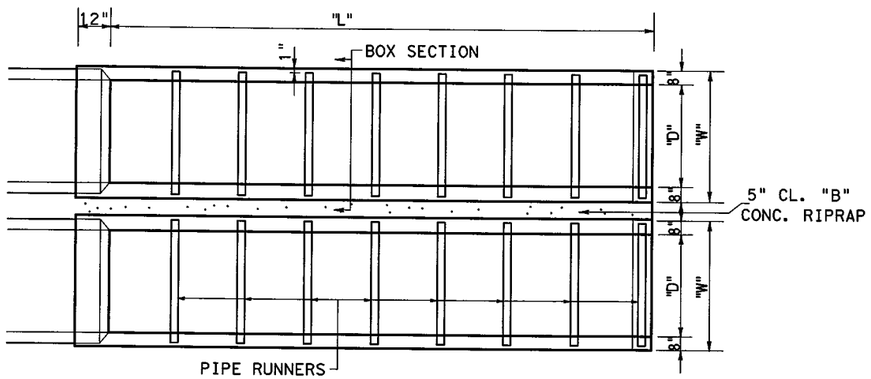

MULTIPLE PIPE PLAN

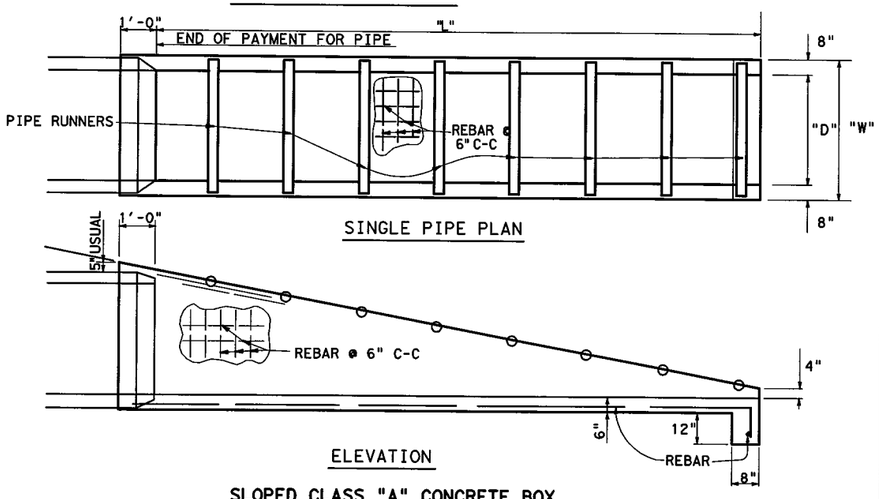

SLOPED CLASS "A" CONCRETE BOX

OPTION TWO

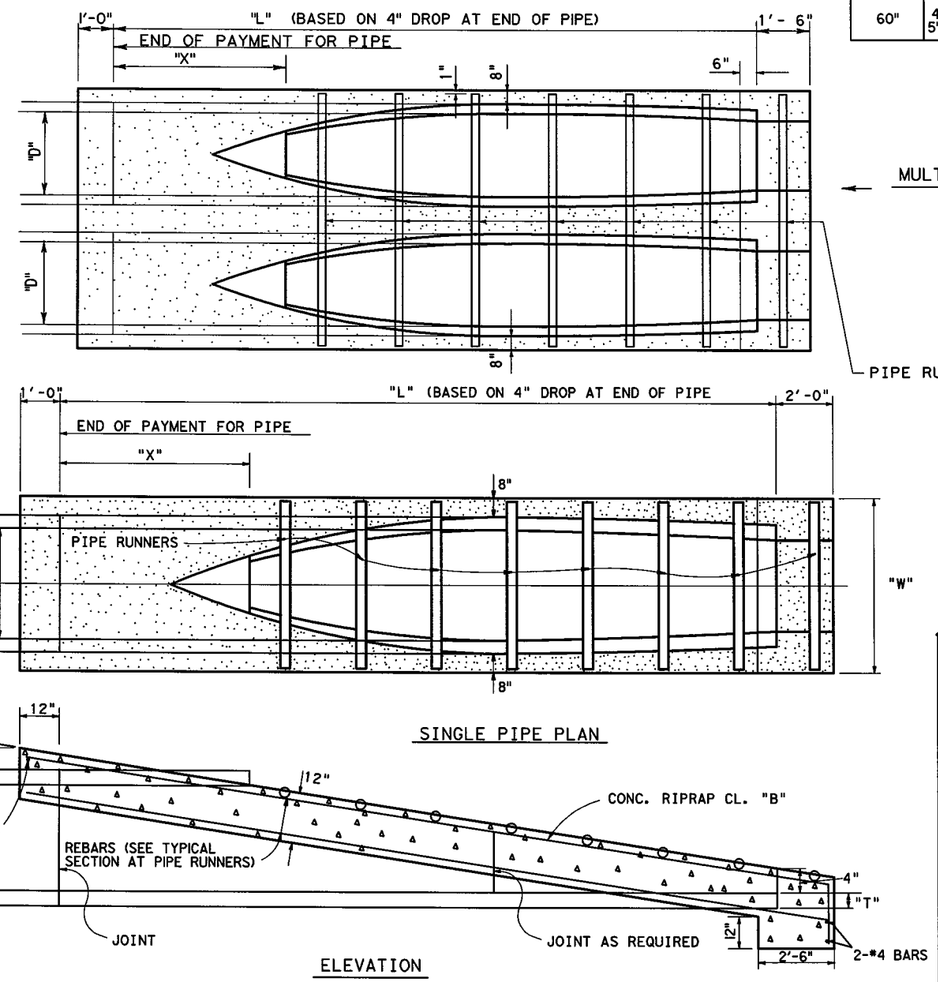

MULTIPLE PIPES PLAN

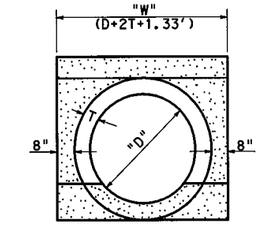

SECTION

SLOPED REINFORCED CONCRETE PIPE

OPTION ONE

GENERAL NOTES:

1. ALL MITERED PIPE SECTIONS, REINFORCING STEEL, BOLTS, NUTS, WASHERS, CONCRETE AND PIPE RUNNERS ARE CONSIDERED PARTS OF THE SAFETY END TREATMENT FOR PAYMENT.
2. ALL REBARS ARE #4. UNLESS NOTED ALL REBARS SHALL HAVE 1½" MINIMUM COVER.
3. DESIGN: SAFETY PIPE RUNNERS ARE DESIGNED FOR A TRAVERSING LOAD OF 10,000 POUNDS AT YIELD AS RECOMMENED BY RESEARCH REPORT 280-2F, SAFETY TREATMENT OF ROADSIDE PARALLEL DRAINAGE STRUCTURES, TEXAS TRANSPORTATION INSTITUTE, JUNE 1981.
4. PIPE RUNNERS MAY BE SIMPLE SPAN OR CONTINUOUS ACROSS MULTIPLE PIPES. ADEQUATE SUPPORT AND ANCHORAGE FOR PIPE RUNNERS SHALL BE PROVIDED AS SHOWN ON THIS SHEET AND AS DIRECTED BY THE ENGINEER
5. QUANTITIES IN ABOVE TABLES ARE SHOWN FOR CONTRACTOR'S INFORMATION ONLY

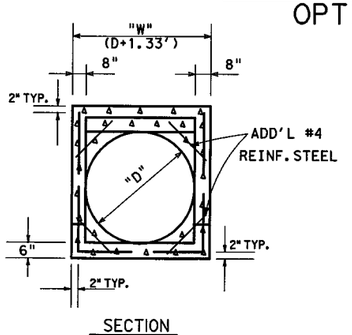

SECTION

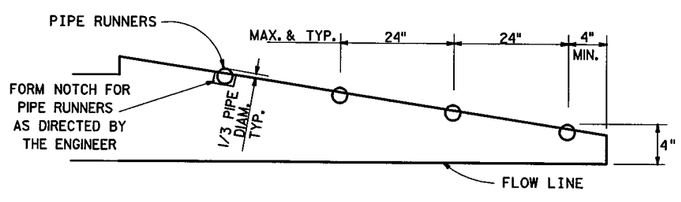

TYPICAL PLACEMENT FOR PIPE RUNNERS (ALL OPTIONS)

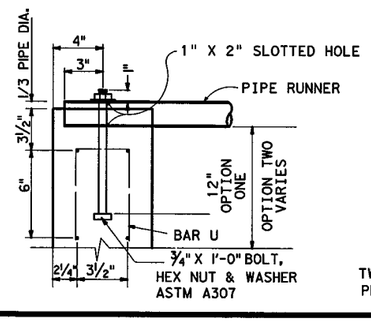

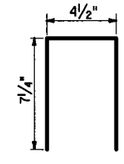

BARS U (ALL OPTIONS)

TWO BARS U ARE REQUIRED AT EACH ANCHOR BOLT, PLACED 4" EACH SIDE OF THE ANCHOR BOLT.

© 2003 by Texas Department of Transportation all rights reserved

REVISED-AUG.	1984-H.G.O.
REVISED-APR.	1985-R.O.N.
REVISED-FEB.	1986-J.B.C.
REVISED-OCT.	1986-L.J.M.
REVISED-FEB.	1987-J.A.T.
REVISED-NOV.	1991-M.J.N.
REVISED-FEB.	1994-E.R.F.

TYPE II
SAFETY END TREATMENT
-PARALLEL DRAINAGE-
33" TO 60"
SINGLE OR MULTIPLE PIPES

SET (2) (FW)

DRAWN	FED.RD. DIV.NO.	STATE	FEDERAL AID PROJECT NO.				SHEET NO.
CHECKED	6	TEXAS	255, ETC.				1303
TRACED	STATE DIST.NO.	COUNTY		CONTROL NO.	SECTION NO.	JOB NO.	SHEET NO.
CHECKED	FORT WORTH	TARRANT		0014	16	255	IH 35W

http://www.dot.state.tx.us/ftw/specinfo/standard.htm set2.dgn

LEVELS DISPLAYED

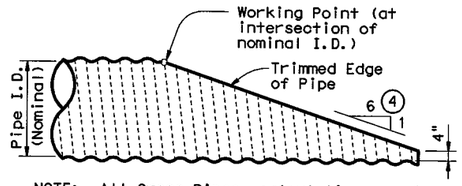

NOTE: All Cross Pipes, calculations, and dimensions are based on the pipe culverts mitered as shown in this detail. Alternate styles of mitered ends will require that appropriate adjustments be made to the values presented on this standard.

SIDE ELEVATION OF TYPICAL PIPE CULVERT MITER

(Showing Corrugated Metal Pipe Culvert.)
(Details at Concrete Pipe Culvert are similar.)

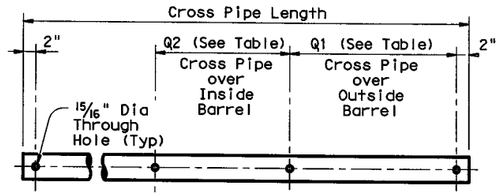

PIPE W/ BOLTED ANCHOR

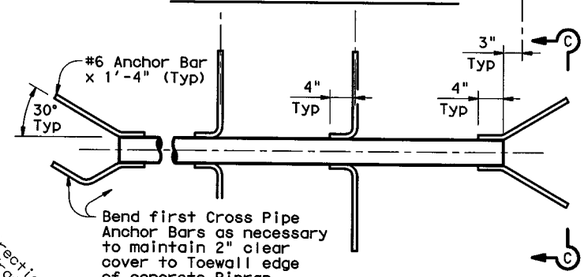

PIPE W/ ANCHOR BARS

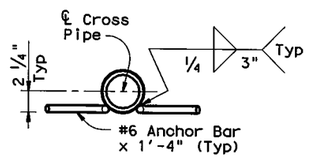

SECTION C-C

CROSS PIPE DETAILS

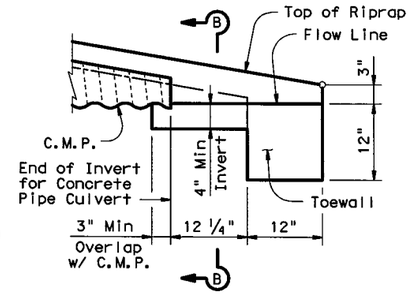

DETAIL "A"

(Showing Invert with Corrugated Metal Pipe Culvert. Concrete Pipe Culvert details are similar. Cross Pipes not shown for clarity.)

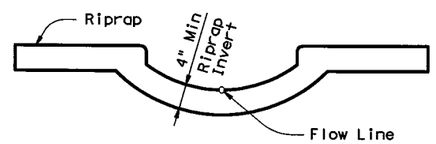

SECTION B-B

(Cross Pipes not shown for clarity.)

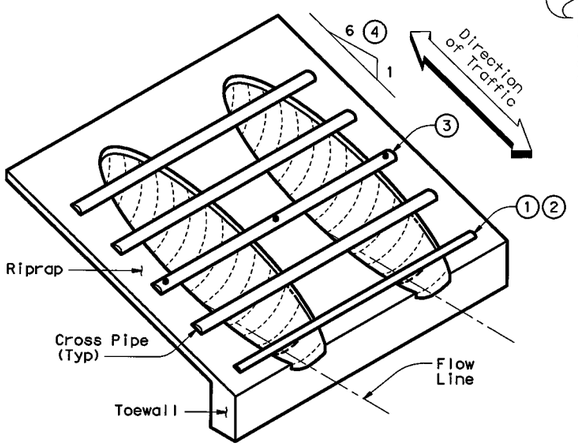

ISOMETRIC VIEW OF TYPICAL INSTALLATION

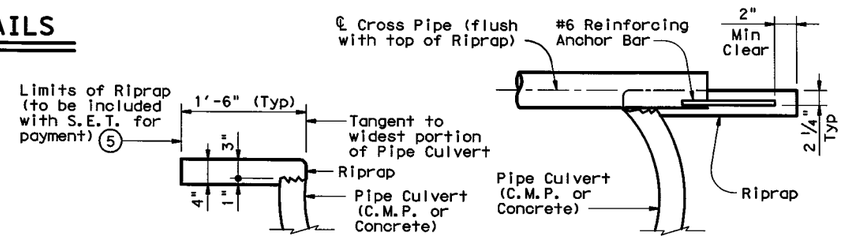

SHOWING TYPICAL PIPE CULVERT & RIPRAP

SHOWING CROSS PIPE WITH ANCHOR BAR

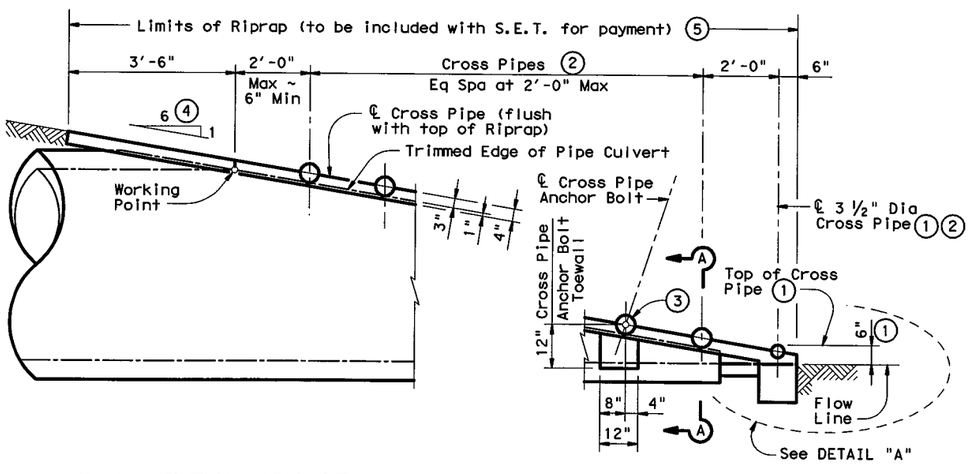

SIDE ELEVATION OF CAST-IN-PLACE CONCRETE

(Showing Concrete Pipe Culvert.)
(Details at Corrugated Metal Pipe Culvert are similar.)

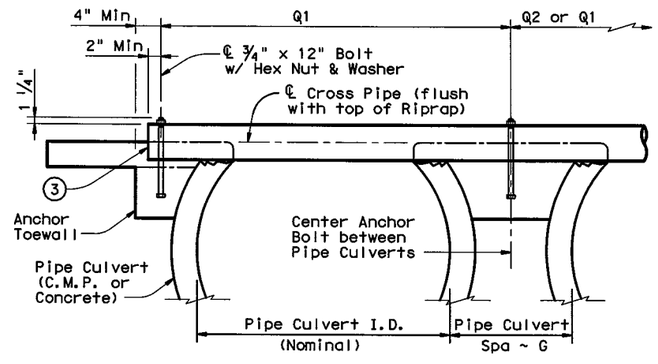

SHOWING CROSS PIPE WITH BOLTED ANCHOR

SECTION A-A

CROSS PIPE LENGTHS, REQUIRED PIPE SIZES, & RIPRAP QUANTITIES 2

Nominal Culvert I.D.	Conc Riprap (CY) 6	Pipe Culvert Spa ~ G	Single Barrel ~ Q1	Multi-Barrel ~ Q1	Q2	Conditions for use of Cross Pipes	Cross Pipe Size
12"	0.6	9"	N/A	2'- 1"	1'- 9"	3 or more Pipe Culverts	3" Std (3.500" O.D.)
15"	0.7	11"	N/A	2'- 5"	2'- 2"		
18"	0.8	1'- 2"	N/A	2'-10"	2'- 8"		
21"	0.9	1'- 4"	N/A	3'- 2"	3'- 1"		
24"	0.9	1'- 7"	N/A	3'- 6"	3'- 7"		
27"	1.0	1'- 8"	N/A	3'-10"	3'-11"	3 or more Pipe Culverts	3 1/2" Std (4.000" O.D.)
30"	1.1	1'-10"	N/A	4'- 2"	4'- 4"	2 or more Pipe Culverts	
33"	1.2	1'-11"	4'- 2"	4'- 5"	4'- 8"	All Pipe Culverts	
36"	1.3	2'- 1"	4'- 5"	4'- 9"	5'- 1"	All Pipe Culverts	4" Std (4.500" O.D.)
42"	1.5	2'- 4"	4'-11"	5'- 5"	5'-10"		
48"	1.7	2'- 7"	5'- 5"	6'- 0"	6'- 7"	All Pipe Culverts	5" Std (5.563" O.D.)
54"	2.0	3'- 0"	5'-11"	6'- 9"	7'- 6"		
60"	2.2	3'- 3"	6'- 5"	7'- 4"	8'- 3"		
66"	2.4	3'- 3"	6'-11"	7'-10"	8'- 9"		
72"	2.7	3'- 4"	7'- 5"	8'- 5"	9'- 4"		

1. The proper installation of the first Cross Pipe is critical for vehicle safety. The top of the first Cross Pipe must be placed at no more than 6" above the flow line.
2. Size of Cross Pipes, except the first bottom pipe, shall be as shown in the PIPE SIZE table. The first bottom pipe shall be 3 1/2" Standard Pipe (4" O.D.).
3. The third Cross Pipe from the bottom of the Culvert shall always be installed using a bolted connection. Care shall be taken to ensure that Riprap concrete does not flow into the Cross Pipe so as to permit disassembly of the bolted connection to allow cleanout access. At the Contractor's option, all other Cross Pipes may also be installed using the bolted connection details.
4. Match Cross Slope as shown elsewhere in the plans. Cross Slope of 6:1 or flatter is required for vehicle safety.
5. Riprap placed beyond the limits shown will be paid as Concrete Riprap in accordance with Item 432, "Riprap".
6. Quantities shown are for one end of one reinforced Concrete Pipe Culvert. For multiple pipe culverts or for Corrugated Metal Pipe Culverts, quantities will need to be adjusted. Riprap quantities are for Contractor's information only.

GENERAL NOTES:

Cross Pipes are designed for a traversing load of 10,000 pounds at yield as recommended by Research Report 280-2F, "Safety Treatment of Roadside Parallel-Drainage Structures", Texas Transportation Institute, March 1981.

Safety End Treatments shown herein are intended for use in those installations where out of control vehicles are likely to traverse the openings approximately perpendicular to the Cross Pipes.

Riprap and all necessary inverts shall be Concrete Riprap conforming to the requirements of Item 432, "Riprap".

Synthetic fibers listed on the "Fibers for Concrete" Material Producer List (MPL) may be used in lieu of steel reinforcing in riprap concrete unless noted otherwise.

Payment for riprap and toewall is included in the Price Bid for each Safety End Treatment.

Cross Pipes shall conform to the requirements of ASTM A53 (Type E or S, Grade B), ASTM A500 (Grade B), or API 5LX52.

Bolts and nuts shall conform to ASTM A307.

All steel components, except concrete reinforcing, shall be galvanized after fabrication. Galvanizing damaged during transport or construction shall be repaired in accordance with the specifications.

DISCLAIMER:
The use of this standard is governed by the "Texas Engineering Practice Act". No warranty of any kind is made by TxDOT for any purpose whatsoever. TxDOT assumes no responsibility for the conversion of this standard to other formats or for incorrect results or damages resulting from its use.

LEVELS DISPLAYED 1 2 3 4 5 6 7 8 9 10 11 12 13 14 15 16 ACC: 17 18 19 20 21 22 23 24 25 26 27 28 29 30 31 32 33 34 35 36 37 38 39 40 41 42 43 44 45 46 47 48 49 50 51 52 53 54 55 56 57 58 59 60 61 62 63

Texas Department of Transportation
Bridge Division

SAFETY END TREATMENT
FOR 12" DIA TO 72" DIA PIPE CULVERTS TYPE II ~ PARALLEL DRAINAGE

SETP-PD

FILE: setppdse.dgn	DN: GAF	CK: CAT	DW: JRP	CK: GAF
©TxDOT February 2010	DISTRICT	FEDERAL AID PROJECT		SHEET
REVISIONS 11-10: Add note for synthetic fibers.	FTW	255, ETC.		1304
	COUNTY	CONTROL	SECT	JOB	HIGHWAY
	TARRANT	0014	16	255	IH 35W

DISCLAIMER:
The use of this standard is governed by the "Texas Engineering Practice Act". No warranty of any kind is made by TxDOT for any purpose whatsoever. TxDOT assumes no responsibility for the conversion of this standard to other formats or for incorrect results or damages resulting from its use.

http://www.dot.state.tx.us/ftw/specinfo/standard.htm miacfw.dgn

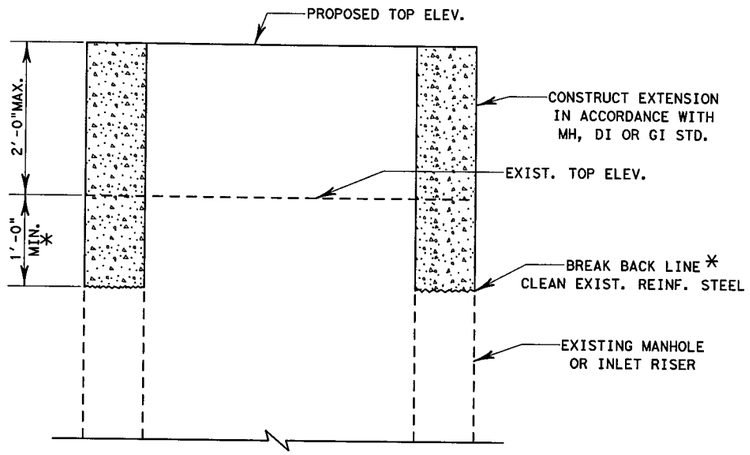

* BREAK BACK 1'-0"MIN. OR AS REQUIRED TO PROVIDE 10"MIN. LAP IN VERTICAL REINFORCING

EXISTING FRAME & GRATE OR RING & COVER MAY BE RE-USED, IF APPROVED.

VERTICAL EXTENSIONS
< 2'-0"

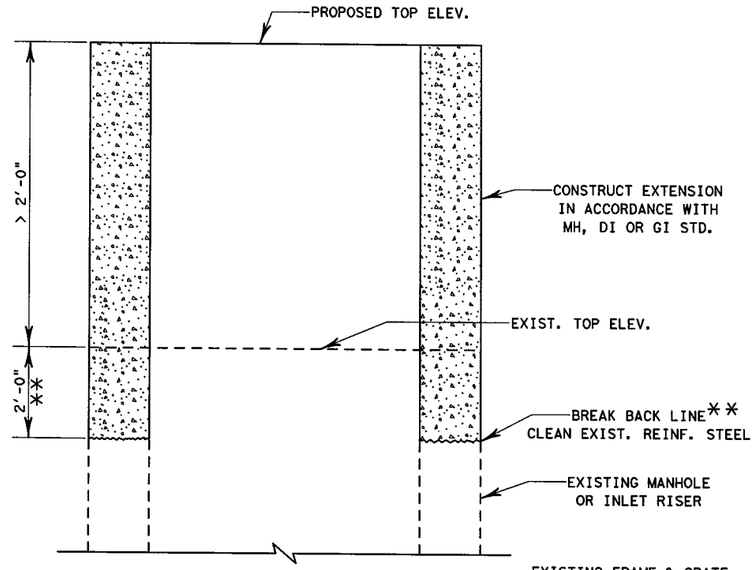

** BREAK BACK 2'-0"MIN. OR AS REQUIRED TO PROVIDE 1'-9" MIN. LAP IN VERTICAL REINFORCING

EXISTING FRAME & GRATE OR RING & COVER MAY BE RE-USED, IF APPROVED.

VERTICAL EXTENSIONS
> 2'-0"

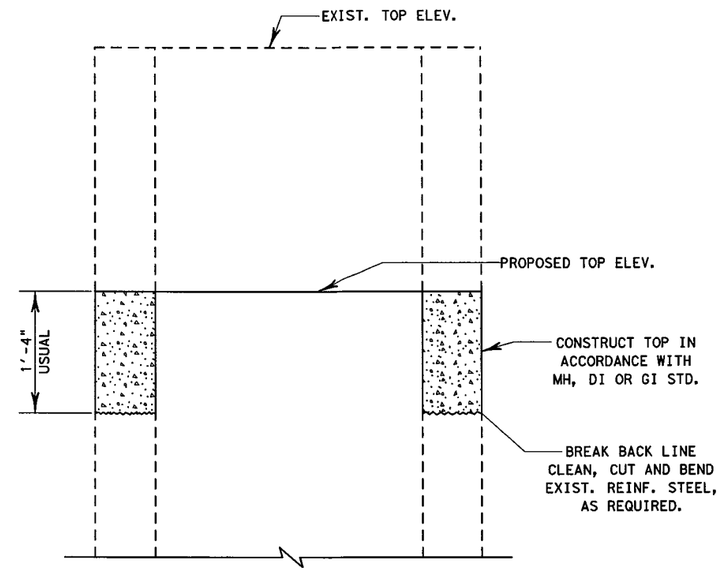

EXISTING FRAME & GRATE OR RING & COVER MAY BE RE-USED, IF APPROVED.

VERTICAL REDUCTION

MANHOLE AND INLET ADJUSTMENT DETAILS

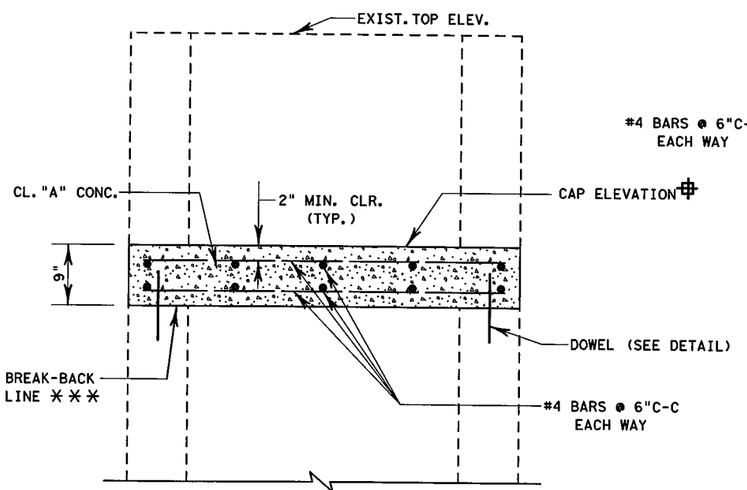

*** CUT STEEL FLUSH WITH CONCRETE & LEVEL WITH GROUT.

MINIMUM 1' BELOW FINISHED GRADE OR SUBGRADE, UNLESS OTHERWISE APPROVED

MANHOLE OR INLET CAP

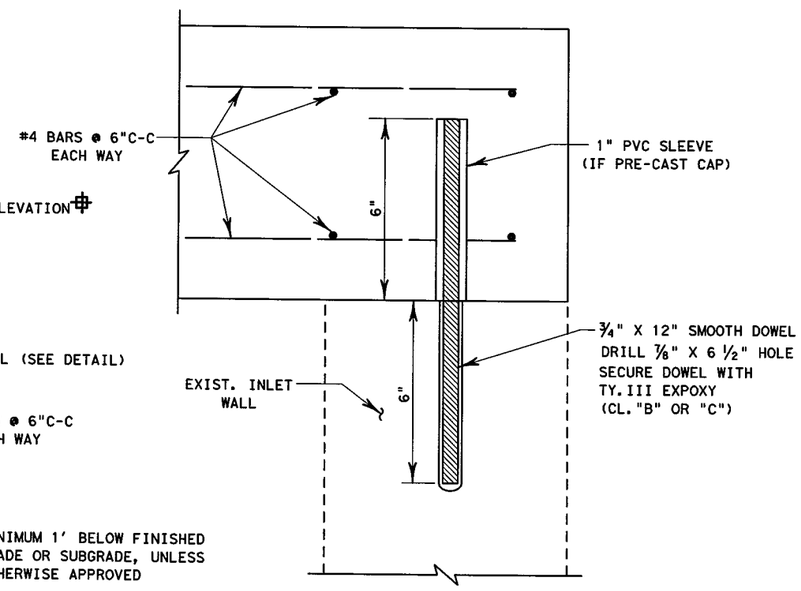

DOWEL DETAIL

MIN. - 4 EA. - PLACED AT CORNERS OF INLET OR MANHOLE FOR CURB INLETS, PLACE AT CORNERS AND AT 5'± C-C ALONG WALLS

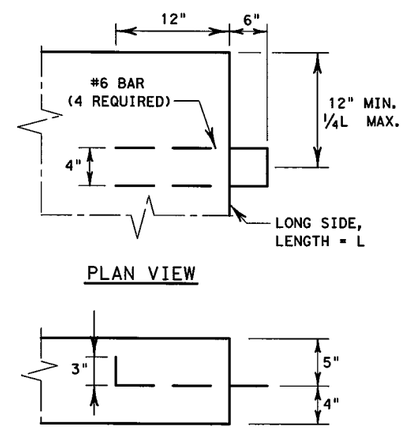

LIFTING LOOPS

USE WITH PRE-CAST CAP

GENERAL NOTES

ALL CONCRETE SHALL BE CLASS A.

MANHOLE AND INLET CAPS MAY BE PRE-CAST OR CAST-IN-PLACE. IF CAST-IN-PLACE, PERMANENT METAL DECK FORMS (PMDF) MAY BE USED. THE METHOD OF SUPPORTING PMDF TO BE APPROVED IN WRITING

MANHOLE AND INLET CAP DETAILS

©2008 by Texas Department of Transportation; all rights reserved

Texas Department of Transportation
FORT WORTH DISTRICT

MANHOLE AND INLET ADJUSTMENT AND CAP DETAILS

MIAC-08 (FW)

ORIGINAL DRAWING	FED. RD. DIV. NO.	PROJECT NO.		SHEET NO.
JUNE 2008	6	255, ETC.		1305
REVISIONS:	STATE	DIST.	COUNTY	
	TEXAS	FTW	TARRANT	
	CONT.	SECT.	JOB	HIGHWAY NO.
	0014	16	255, ETC.	IH 35W

LEVELS DISPLAYED

1	2	3	4	5	6	7	8	9	0	11	12	13	14	15	16	17	18	19	20	21	22	23	24	25	26	27	28	29	30	31	32
33	34	35	36	37	38	39	40	41	42	43	44	45	46	47	48	49	50	51	52	53	54	55	56	57	58	59	60	61	62	63	

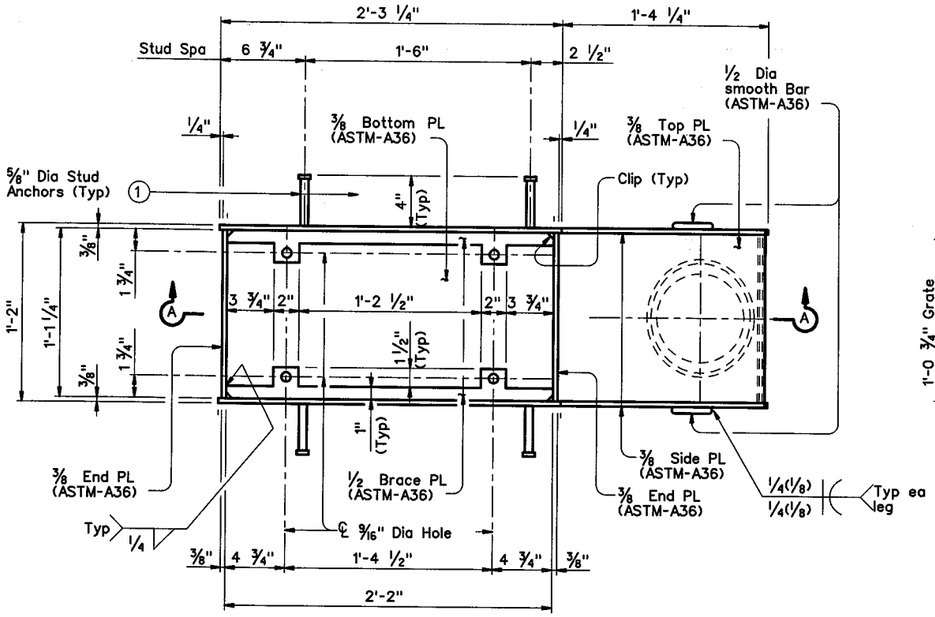

PLAN

(Grate not shown for clarity)

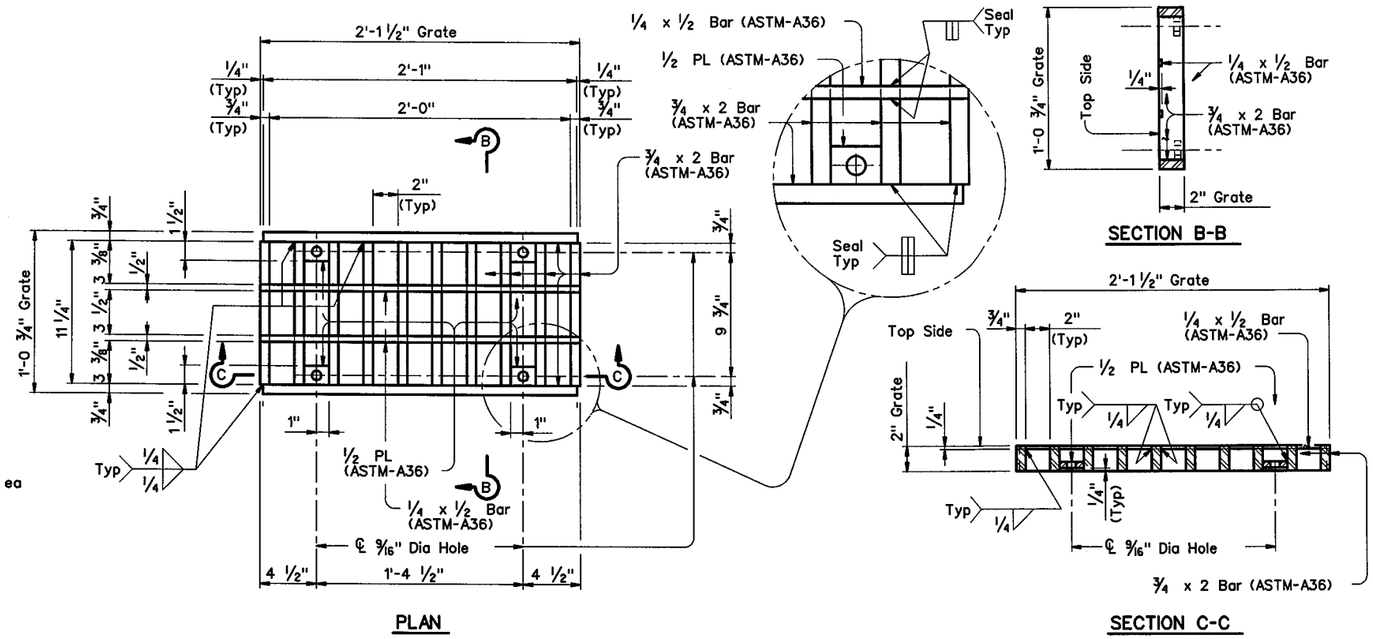

PLAN

SECTION B-B

SECTION C-C

GRATE DETAILS

(Grate open area = 178 sq in)

① Electric arc end-weld stud anchors to plates with complete fusion.

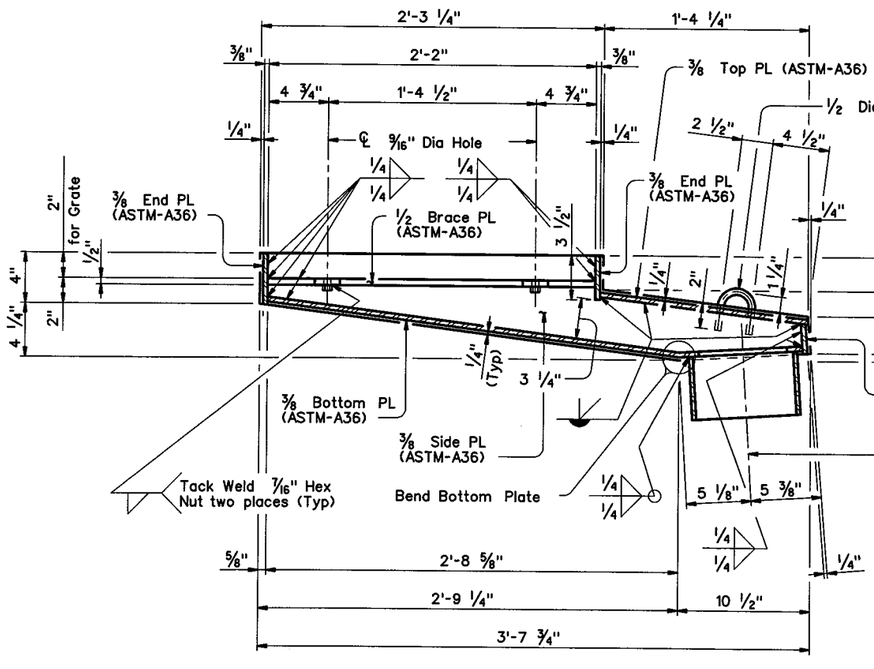

SECTION A-A

(Grate and Studs not shown for clarity)

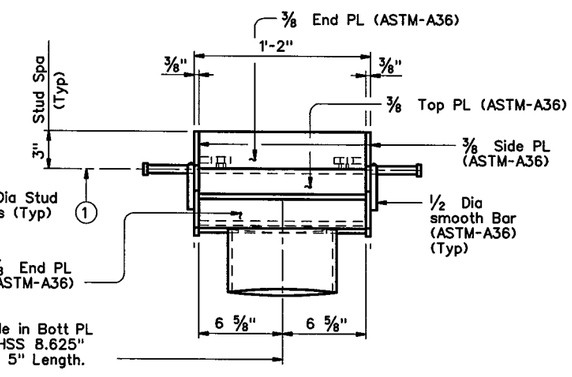

END VIEW OF DRAIN

HL93 LOADING

SHEET 1 OF 2

STATE OF TEXAS
B. VANDERWALT
81580
LICENSED
PROFESSIONAL ENGINEER
P.E.
7/13/2012

Texas Department of Transportation
Bridge Division

BRIDGE DRAIN DETAILS (WELDED)

BD-3 (MOD)

FILE: bdstde03.dgn	DN: TxDOT	CK: TxDOT	DW: JTR	CK: TAR
©TxDOT May 2011	DISTRICT	FEDERAL AID PROJECT		SHEET
REVISIONS	FTW	255, ETC.		1306
	COUNTY	CONTROL	SECT	JOB	HIGHWAY
	TARRANT	0014	16	255	IH 35W

DISCLAIMER:
The use of this standard is governed by the "Texas Engineering Practice Act". No warranty of any kind is made by TxDOT for any purpose whatsoever. TxDOT assumes no responsibility for the conversion of this standard to other formats or for incorrect results or damages resulting from its use.

LEVELS DISPLAYED

1	2	3	4	5		7	8	9	10	11	12	13	14	15	16
17	18	19	20	21	22	23	24	25	26	27	28	29	30	31	32
33	34	35	36	37	38	39	40	41	42	43	44	45	46	47	48
49	50	51	52	53	54	55	56	57	58	59	60	61	62	63	

PATH:

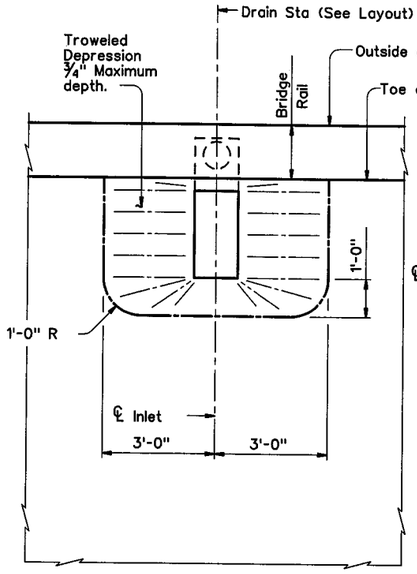

TROWELED DEPRESSION

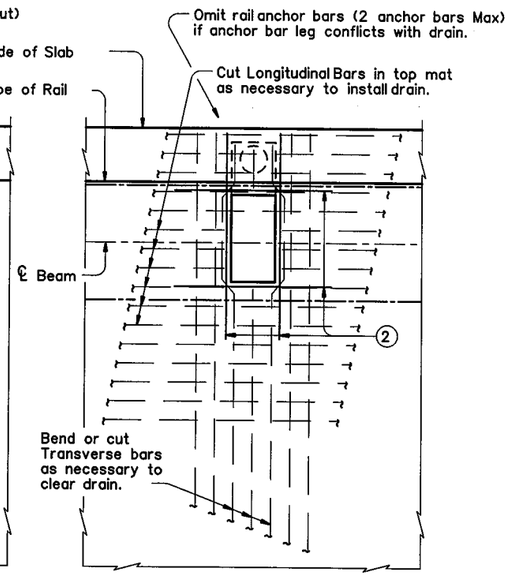

SHOWING TYPICAL SLAB REINFORCING

Showing top reinforcing only, bottom reinforcing not shown for clarity.

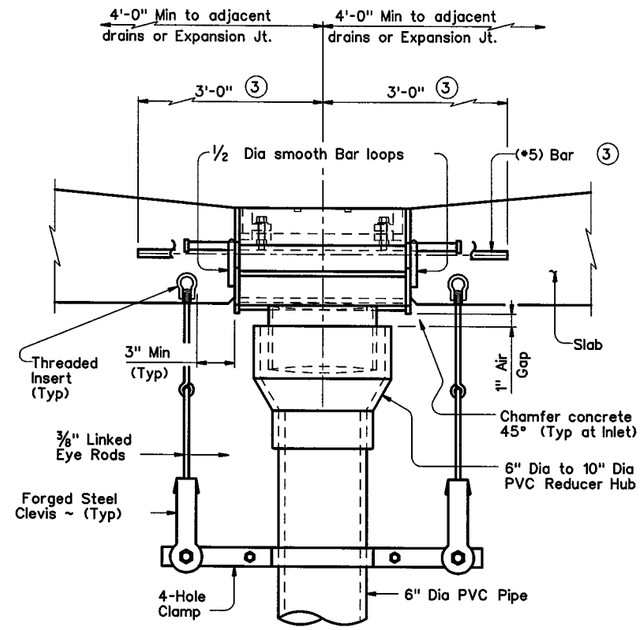

HOOK-UP TO INLET WITH VERTICAL PIPE SUPPORT

1. Electric arc end-weld stud anchors to plates with complete fusion.
2. Provide 4 additional (•5) bars around perimeter in top mat of reinforcing and 4 additional (•5) bars around perimeter in bottom mat of reinforcing. Extend bars 1'-6" from edges of drain.
3. Place one 6'-0" long (•5) Bar threaded thru ½ Dia smooth Bar loops, centered with drain. Contractor must provide 6'-0" long (•5) bar for each drain.
4. After nuts have been tack welded to the frame, test assemble frame and grate with hex bolts.
5. Grate must be test fitted by the fabricator to ensure grate can be rotated in either direction of 180° to accommodate assembly in the field.

GENERAL NOTES:

These drain details are intended for I-Girders and U-Beams with drain outfall on bridge exterior.

Galvanize all steel components in accordance with Item 445 "Galvanizing" unless noted otherwise.

Slab reinforcing bars must be bent to clear drain by 1". When bending is not possible reinforcing bars may be stopped or cut to clear drain as shown. Additional slab reinforcing is considered subsidiary to "Reinforced Concrete Slab". When placing concrete, care must be taken to prevent honeycombing or air pockets around and beneath the drain.

All PVC pipe must be Schedule 40 DWV conforming to ASTM D 2665. Minimum wall thickness: 0.280" ~ 6" Dia, 0.322" ~ 8" Dia. Fittings to be used as directed by the Engineer. All pipe must be securely supported by the superstructure. Pipe and supports must accommodate anticipated longitudinal movements of pipe and bridge slab. For long pipe runs, pipe grade must match roadway grade. All metallic pipe support hardware and fasteners must be galvanized in accordance with Item 445 "Galvanizing". All attachment devices are considered subsidiary to the bid item "Grate and Frame".

Round or chamfer exposed edges of Grate and Frame to approximately 1/16" by grinding, unless otherwise noted.

Payment will be by each Grate and Frame (Bridge Drain).

See Bridge Layout for location of drains.

Deviation from these details is not permitted without prior approval from the Engineer.

Average weight of Grate and Frame:

240 Lb total
73 Lb (Grate)
167 Lb (Frame).

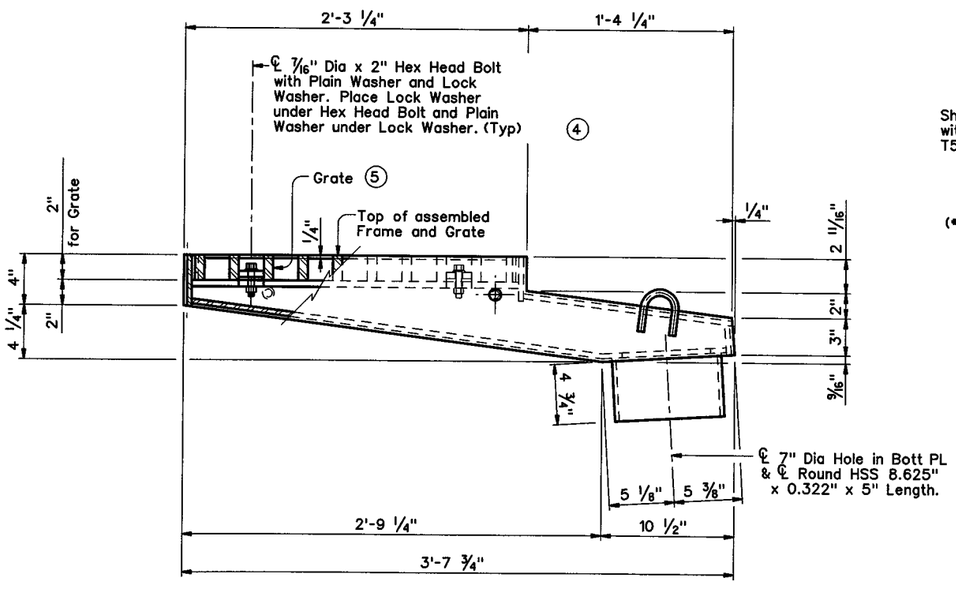

SIDE VIEW OF ASSEMBLED FRAME AND GRATE

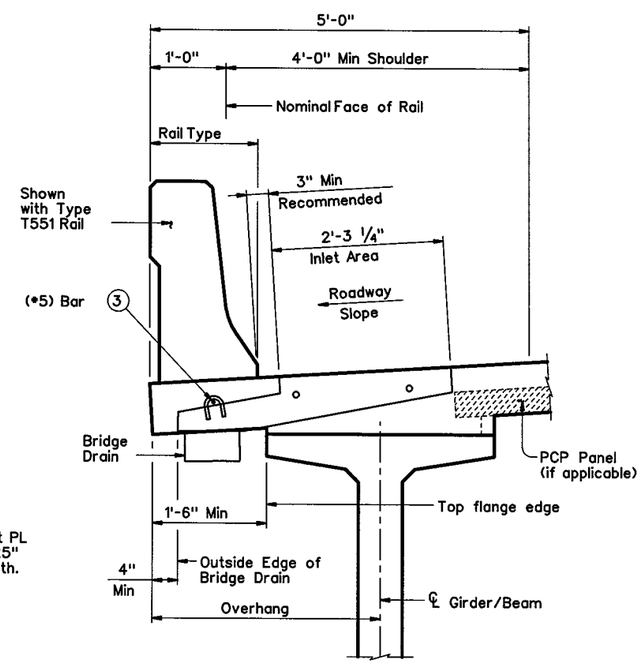

EXAMPLE OF INLET ON BRIDGE DECK

Shown without troweled depression. With troweled depression similar.

STATE OF TEXAS
B. VANDERWALT
81580
LICENSED
PROFESSIONAL ENGINEER
7/13/2012

HL93 LOADING

SHEET 2 OF 2

Texas Department of Transportation
Bridge Division

BRIDGE DRAIN DETAILS (WELDED)

BD-3 (MOD)

FILE: bdste03.dgn	DN: TxDOT	CK: TxDOT	DW: JTR	CK: TAR	
©TxDOT May 2011	DISTRICT	FEDERAL AID PROJECT			SHEET
REVISIONS	FTW	255, ETC.			1307
	COUNTY		CONTROL	SECT	JOB	HIGHWAY
	TARRANT		0014	16	255	IH 35W

DISCLAIMER:
The use of this standard is governed by the "Texas Engineering Practice Act". No warranty of any kind is made by TxDOT for any purpose whatsoever. TxDOT assumes no responsibility for the conversion of this standard to other formats or for incorrect results or damages resulting from its use.

LEVELS DISPLAYED
1 2 3 4 5 6 7 8 9 10 11 12 13 14 15 16
17 18 19 20 21 22 23 24 25 26 27 28 29 30 31 32
33 34 35 36 37 38 39 40 41 42 43 44 45 46 47 48
49 50 51 52 53 54 55 56 57 58 59 60 61 62 63

PATH:

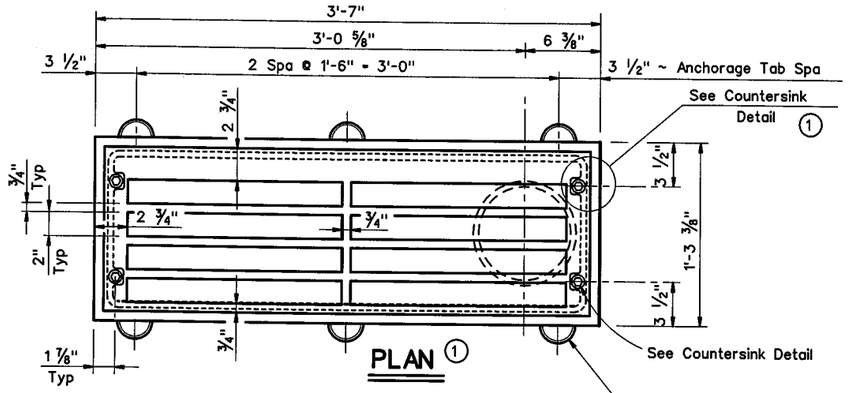

PLAN 1

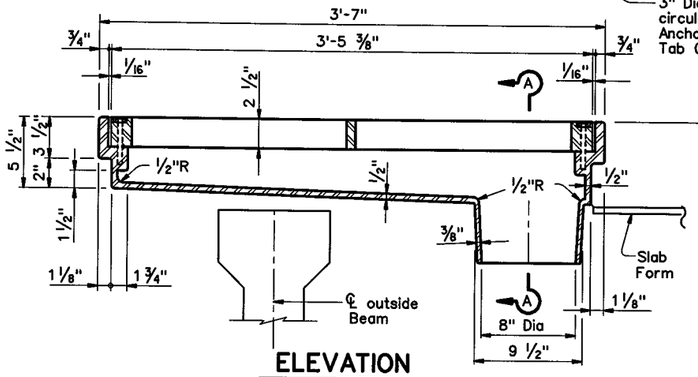

ELEVATION

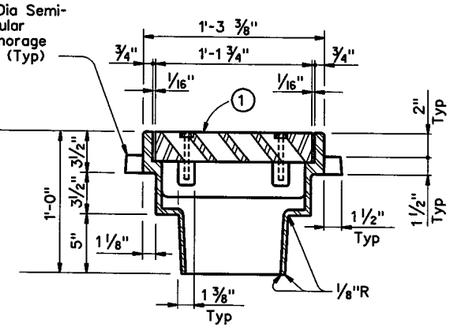

SECTION A-A

If prestressed concrete panels are permitted, they shall be placed 3' Min from edges of casting. This portion of cast-in-place slab shall be conventionally reinforced as detailed on the Span or Unit sheets and as directed by the Engineer.

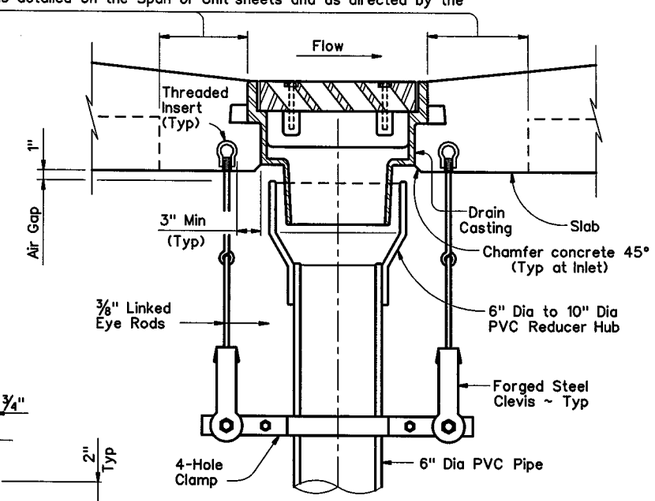

HOOK-UP TO INLET WITH VERTICAL PIPE SUPPORT 3

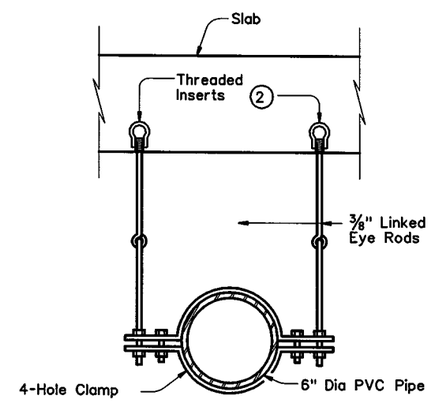

HORIZONTAL PIPE SUPPORT 3

(Spaced 1'-0" from ℄ Drain then 4'-0" Max spacing for PVC pipe)

1 Grate must be test fitted at the Fabricator to ensure grate can be rotated 180° to accommodate water flow from either direction.

2 If Prestressed Concrete Panels are permitted, a 7/16" hole shall be drilled or cored (percussion or star drilling shall not be permitted) thru the panels, the 3/8" Linked Eye Rods inserted through the panels and the threaded insert placed in the cast-in-place portion of the bridge slab above the panels.

3 Edge of Bridge Drain shall be placed close to the toe of rail and all plumbing shall be placed behind outside beam and inside Interior Bents and Abutments as practicable to hide from view.

4 Provide 4 additional #5 bars around perimeter in top mat of reinforcing and 4 additional #5 bars around perimeter in bottom mat of reinforcing. Extend bars 1'-6" from edges of drain.

5 Provide 1/2" Dia hole for Bolt thru grate.

6 Provide 7/16" ~ 14 NC threaded hole in frame ~ Depth of Hole = 1 1/4".

GENERAL NOTES:

The cast steel Bridge Drain frame and grate detailed herein shall conform to Item 471 and ASTM A 27 Grade 65-35. Care shall be taken to ensure uniform bearing between contact surfaces of grate and frame. Grate must be test fitted at the fabricator for installation of the grate in either orientation to accommodate water flow from either direction across the grate. Irregularities may be removed by grinding. Frame and grate shall be galvanized in accordance with Item 445 after all fabrication and adjustments. All drafts 3°. All fillets 1/4" radius unless otherwise shown.

Alternate bridge drains may be substituted for the bridge drain shown on this sheet provided they are approved by the Engineer prior to fabrication and installation. Alternate drains must have an approximately equal grate opening area (300 sq in) and an 8" diameter outfall. The grate should be of a similar configuration with vanes oriented perpendicular to the direction of traffic and angled toward the flow direction of the storm water. Acceptable materials for cast alternate bridge drains are either ASTM A 48, Class 35 B gray iron or ASTM A 536 Grade 65-45-12 ductile iron. Galvanization of these materials will not be required.

Slab reinforcing bars shall be bent to clear casting by 1". When bending is not possible reinforcing bars may be stopped or cut to clear casting as shown. Additional slab reinforcing shall be subsidiary to "Reinforced Concrete Slab". When placing concrete, care shall be taken to prevent honeycombing or air pockets around or beneath the casting.

All PVC pipe shall be Schedule 40 DWV conforming to ASTM D 2665. Minimum wall thickness: 0.280" ~ 6" Dia, 0.322" ~ 8" Dia. Fittings to be used as directed by the Engineer. All pipe shall be securely supported by the superstructure. Pipe and supports shall accommodate anticipated longitudinal movements of pipe and bridge slab. For long pipe runs, pipe grade shall match roadway grade. All metallic pipe support hardware and fasteners shall be galvanized in accordance with Item 445. All attachment devices shall be considered subsidiary to the bid item "Grate and Frame".

Payment will be by each Grate & Frame (Bridge Drain).

See Bridge Layout for location of drains.

Deviations from Bridge Drain Details contained herein will not be permitted without prior approval from the Engineer.

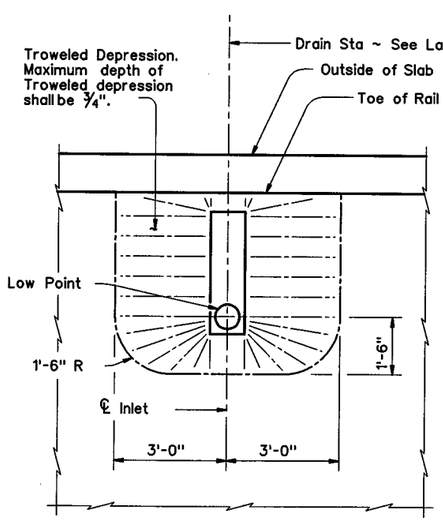

TROWELED DEPRESSION

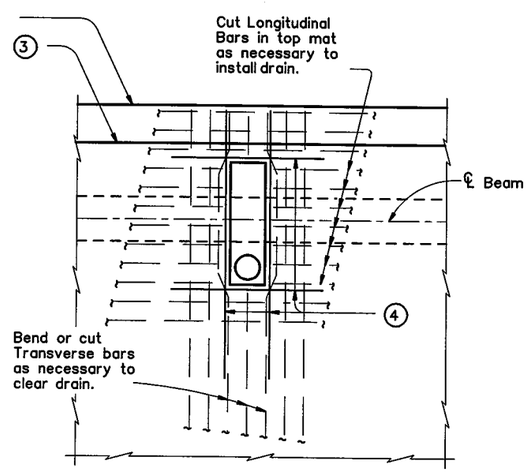

SHOWING TYPICAL SLAB REINFORCING

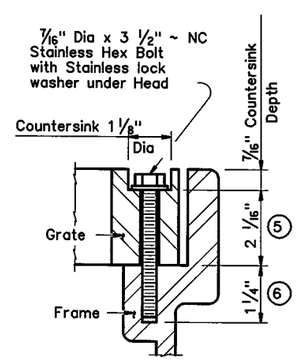

COUNTERSINK DETAIL 1

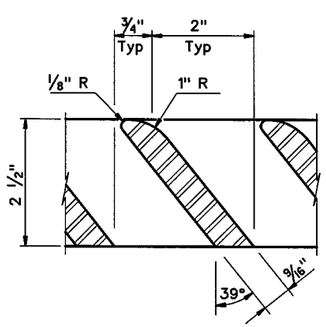

GRATE VANE DETAIL

DISCLAIMER:
The use of this standard is governed by the "Texas Engineering Practice Act". No warranty of any kind is made by TxDOT for any purpose whatsoever. TxDOT assumes no responsibility for the conversion of this standard to other formats or for incorrect results or damages resulting from its use.

LEVELS DISPLAYED — ACC:

STATE OF TEXAS — B. VANDERWALT — 81580 — LICENSED PROFESSIONAL ENGINEER

7/13/2012

HL93 LOADING

Texas Department of Transportation
Bridge Division

BRIDGE DRAIN DETAILS (CAST)

BD-1 (MOD)

FILE: bdstde01.dgn	DN: LMW	CK: TxDOT	DW: TxDOT	CK: TxDOT		
©TxDOT February 2010	DISTRICT	FEDERAL AID PROJECT				SHEET
REVISIONS	FTW	255, ETC.				1308
	COUNTY		CONTROL	SECT	JOB	HIGHWAY
	TARRANT		0014	16	255	H 35W

TABLE OF VARIABLE DIMENSIONS AND QUANTITIES FOR ONE HEADWALL (4)

SLOPE	DIA OF PIPE, D	Values for one Pipe			Values to be added for each addt'l Pipe		
		W	Reinf (Lbs)	Conc (CY) (1)	W	Reinf (Lbs)	Conc (CY) (1)
2:1	12"	9'- 0"	122	1.1	1'- 9"	15	0.2
	15"	10'- 3"	136	1.3	2'- 2"	16	0.2
	18"	11'- 6"	163	1.5	2'- 8"	19	0.3
	21"	12'- 9"	200	1.8	3'- 1"	31	0.4
	24"	14'- 0"	217	2.1	3'- 7"	34	0.4
	27"	15'- 3"	254	2.4	3'-11"	37	0.5
	30"	16'- 6"	272	2.7	4'- 4"	40	0.6
	33"	17'- 9"	314	3.1	4'- 8"	43	0.6
	36"	19'- 0"	371	3.9	5'- 1"	46	0.8
	42"	21'- 6"	442	4.9	5'-10"	52	1.0
	48"	25'- 0"	569	6.4	6'- 7"	59	1.3
	54"	27'- 6"	701	7.5	7'- 6"	82	1.6
	60"	30'- 0"	794	8.8	8'- 3"	90	1.8
	66"	32'- 6"	894	10.2	8'- 9"	96	2.0
	72"	35'- 0"	1055	11.7	9'- 4"	103	2.3
3:1	12"	13'- 0"	175	1.6	1'- 9"	14	0.2
	15"	14'- 9"	193	1.9	2'- 2"	17	0.2
	18"	16'- 6"	228	2.2	2'- 8"	19	0.3
	21"	18'- 3"	299	2.6	3'- 1"	31	0.4
	24"	20'- 0"	323	3.0	3'- 7"	33	0.4
	27"	21'- 9"	371	3.5	3'-11"	37	0.5
	30"	23'- 6"	415	4.0	4'- 4"	40	0.5
	33"	25'- 3"	469	4.6	4'- 8"	43	0.6
	36"	27'- 0"	556	5.7	5'- 1"	46	0.8
	42"	30'- 6"	675	7.1	5'-10"	52	1.0
	48"	35'- 6"	837	9.2	6'- 7"	59	1.3
	54"	39'- 0"	1015	11.0	7'- 6"	84	1.6
	60"	42'- 6"	1171	12.9	8'- 3"	91	1.8
	66"	46'- 0"	1298	14.9	8'- 9"	98	2.0
	72"	49'- 6"	1561	17.1	9'- 4"	103	2.3
4:1	12"	17'- 0"	229	2.0	1'- 9"	15	0.2
	15"	19'- 3"	266	2.4	2'- 2"	17	0.2
	18"	21'- 6"	308	2.9	2'- 8"	19	0.3
	21"	23'- 9"	382	3.5	3'- 1"	31	0.3
	24"	26'- 0"	430	3.9	3'- 7"	34	0.4
	27"	28'- 3"	486	4.7	3'-11"	37	0.5
	30"	30'- 6"	539	5.2	4'- 4"	40	0.6
	33"	32'- 9"	603	6.0	4'- 8"	42	0.6
	36"	35'- 0"	738	7.5	5'- 1"	47	0.8
	42"	39'- 6"	881	9.3	5'-10"	52	1.0
	48"	46'- 0"	1102	12.1	6'- 7"	61	1.3
	54"	50'- 6"	1364	14.4	7'- 6"	84	1.6
	60"	55'- 0"	1547	16.9	8'- 3"	91	1.8
	66"	59'- 6"	1741	19.5	8'- 9"	98	2.0
	72"	64'- 0"	2069	22.4	9'- 4"	102	2.3
6:1	12"	25'- 0"	336	3.0	1'- 9"	14	0.2
	15"	28'- 3"	384	3.6	2'- 2"	17	0.2
	18"	31'- 6"	452	4.2	2'- 8"	19	0.3
	21"	34'- 9"	581	5.1	3'- 1"	31	0.4
	24"	38'- 0"	644	5.8	3'- 7"	34	0.4
	27"	41'- 3"	737	6.9	3'-11"	37	0.5
	30"	44'- 6"	807	7.7	4'- 4"	39	0.6
	33"	47'- 9"	912	8.9	4'- 8"	44	0.6
	36"	51'- 0"	1108	11.0	5'- 1"	48	0.8
	42"	57'- 6"	1318	13.7	5'-10"	54	1.0
	48"	67'- 0"	1674	17.9	6'- 7"	59	1.3
	54"	73'- 6"	2064	21.3	7'- 6"	83	1.6
	60"	80'- 0"	2343	24.9	8'- 3"	89	1.8
	66"	86'- 6"	2635	28.9	8'- 9"	96	2.0
	72"	93'- 0"	3123	33.1	9'- 4"	101	2.3

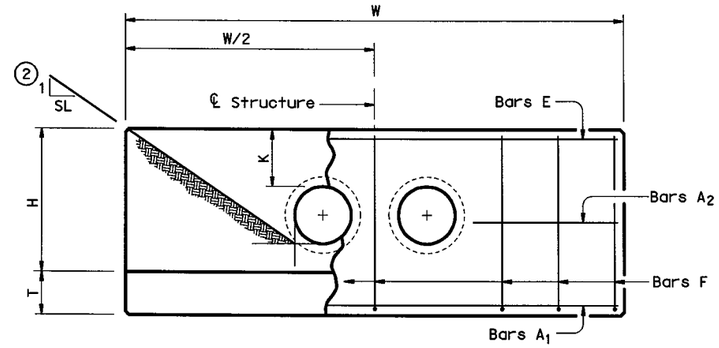

ELEVATION

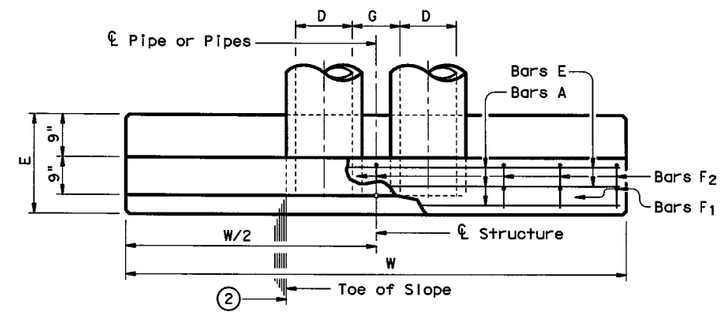

PLAN OF NON-SKEWED PIPES

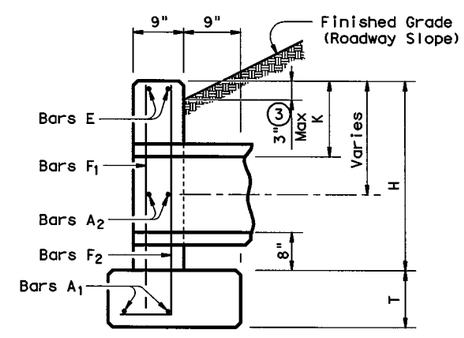

℄ SECTION

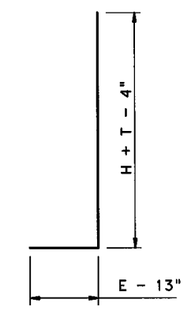

BARS F2

TABLE OF CONSTANT DIMENSIONS

DIA OF PIPE, D	G	K	H	T	E
12"	9"	1'- 0"	2'- 8"	9"	1'- 9"
15"	11"	1'- 0"	2'-11"	9"	1'- 9"
18"	1'- 2"	1'- 0"	3'- 2"	9"	1'- 9"
21"	1'- 4"	1'- 0"	3'- 5"	9"	2'- 0"
24"	1'- 7"	1'- 0"	3'- 8"	9"	2'- 0"
27"	1'- 8"	1'- 0"	3'-11"	9"	2'- 3"
30"	1'-10"	1'- 0"	4'- 2"	9"	2'- 3"
33"	1'-11"	1'- 0"	4'- 5"	9"	2'- 6"
36"	2'- 1"	1'- 0"	4'- 8"	1'- 0"	2'- 6"
42"	2'- 4"	1'- 0"	5'- 2"	1'- 0"	2'- 9"
48"	2'- 7"	1'- 3"	5'-11"	1'- 0"	3'- 0"
54"	3'- 0"	1'- 3"	6'- 5"	1'- 0"	3'- 3"
60"	3'- 3"	1'- 3"	6'-11"	1'- 0"	3'- 6"
66"	3'- 3"	1'- 3"	7'- 5"	1'- 0"	3'- 9"
72"	3'- 4"	1'- 3"	7'-11"	1'- 0"	4'- 0"

TABLE OF REINFORCING STEEL (4)

Bar	Size	Spa	No.
A1	# 5	~	2
A2	# 5	1'-6"	~
E	# 5	~	2
F	# 5	1'-0"	~

GENERAL NOTES:

Designed according to AASHTO LRFD Specifications.

Reinforcing steel shall be placed with the center of the outside layer of bars 2" from the surface of the concrete.

All reinforcing steel shall be Grade 60.

All concrete shall be Class "C" and shall have a minimum compressive strength of 3600 psi.

No bridge rails of any type may be mounted directly to these culvert headwalls.

(1) Quantities shown are for concrete pipe and will increase slightly for metal pipe installations.

(2) Indicated slope is perpendicular to centerline Pipe or Pipes.

(3) For vehicle safety, curbs shall project no more than 3" above finished grade. Curb heights shall be reduced, if necessary, to meet these requirements. No changes will be made in quantities and no additional compensation will be allowed for this work.

(4) Quantities shown are for one structure end only (one headwall).

DISCLAIMER:
The use of this standard is governed by the "Texas Engineering Practice Act". No warranty of any kind is made by TxDOT for any purpose whatsoever. TxDOT assumes no responsibility for the conversion of this standard to other formats or for incorrect results or damages resulting from its use.

LEVELS DISPLAYED

1	2	3	4	5	6	7	8	9	10	11	12	13	14	15	16
17	18	19	20	21	22	23	24	25	26	27	28	29	30	31	32
33	34	35	36	37	38	39	40	41	42	43	44	45	46	47	48
49	50	51	52	53	54	55	56	57	58	59	60	61	62	63	

ACC:

Texas Department of Transportation
Bridge Division

CONCRETE HEADWALLS WITH PARALLEL WINGS FOR NON-SKEWED PIPE CULVERTS

CH-PW-0

FILE: chpw0ste.dgn	DN: TxDOT	CK: TxDOT	DW: TxDOT	CK: GAF
©TxDOT February 2010	DISTRICT	FEDERAL AID PROJECT		SHEET
REVISIONS	FTW	255, ETC.		309

COUNTY	CONTROL	SECT	JOB	HIGHWAY
TARRANT	0014	16	255	IH 35W

TABLE OF VARIABLE DIMENSIONS AND QUANTITIES FOR ONE HEADWALL (4)

SLOPE	DIA OF PIPE, D	15 Degrees						30 Degrees						45 Degrees					
		Values for one Pipe			Values to be added for each addt'l Pipe			Values for one Pipe			Values to be added for each addt'l Pipe			Values for one Pipe			Values to be added for each addt'l Pipe		
		W	Reinf (Lbs)	Conc (CY) (1)	W	Reinf (Lbs)	Conc (CY) (1)	W	Reinf (Lbs)	Conc (CY) (1)	W	Reinf (Lbs)	Conc (CY) (1)	W	Reinf (Lbs)	Conc (CY) (1)	W	Reinf (Lbs)	Conc (CY) (1)
2:1	12"	9'- 4"	124	1.1	1'- 9 3/4"	15	0.2	10'- 5"	130	1.2	2'- 0"	16	0.2	12'- 9"	159	1.5	2'- 5 3/4"	17	0.3
	15"	10'- 7"	136	1.3	2'- 3"	17	0.2	11'-10"	159	1.5	2'- 6"	18	0.2	14'- 6"	191	1.8	3'- 0 3/4"	20	0.3
	18"	11'-11"	165	1.5	2'- 9"	19	0.3	13'- 3"	174	1.7	3'- 1"	29	0.3	16'- 3"	207	2.1	3'- 9 1/4"	33	0.4
	21"	13'- 2"	203	1.9	3'- 2 1/4"	31	0.4	14'- 9"	233	2.1	3'- 6 3/4"	33	0.4	18'- 0"	276	2.6	4'- 4 1/4"	36	0.5
	24"	14'- 6"	240	2.1	3'- 8 1/4"	34	0.4	16'- 2"	251	2.4	4'- 1 3/4"	36	0.5	19'-10"	318	2.9	5'- 0 3/4"	39	0.6
	27"	15'- 9"	258	2.5	4'- 0 3/4"	38	0.5	17'- 7"	292	2.8	4'- 6 1/4"	39	0.6	21'- 7"	342	3.4	5'- 6 1/4"	44	0.7
	30"	17'- 1"	297	2.8	4'- 5 3/4"	40	0.6	19'- 1"	311	3.1	5'- 0"	42	0.6	23'- 4"	388	3.8	6'- 1 3/4"	47	0.8
	33"	18'- 5"	320	3.3	4'- 9 3/4"	43	0.6	20'- 6"	358	3.6	5'- 4 3/4"	46	0.7	25'- 1"	439	4.4	6'- 7 1/4"	51	0.9
	36"	19'- 8"	401	4.0	5'- 3"	47	0.9	21'-11"	422	4.5	5'-10 3/4"	50	0.9	26'-10"	517	5.5	7'- 2 1/4"	55	1.2
	42"	22'- 3"	476	5.0	6'- 0 3/4"	53	1.1	24'-10"	528	5.6	6'- 8 3/4"	56	1.2	30'- 5"	634	6.9	8'- 3"	76	1.4
	48"	25'-11"	577	6.6	6'- 9 3/4"	60	1.3	28'-10"	637	7.3	7'- 7 1/4"	79	1.5	35'- 4"	791	9.0	9'- 3 3/4"	88	1.8
	54"	28'- 6"	711	7.8	7'- 9"	83	1.6	31'- 9"	781	8.7	8'- 8"	87	1.8	38'-11"	958	10.7	10'- 7 1/4"	97	2.2
	60"	31'- 1"	805	9.2	8'- 6 1/4"	91	1.9	34'- 8"	881	10.2	9'- 6 1/4"	97	2.1	42'- 5"	1113	12.5	11'- 8"	124	2.6
	66"	33'- 8"	907	10.6	9'- 0 3/4"	98	2.1	37'- 6"	1028	11.8	10'- 1 1/4"	102	2.4	46'- 0"	1235	14.5	12'- 4 1/4"	132	2.9
	72"	36'- 3"	1071	12.1	9'- 8"	105	2.4	40'- 5"	1207	13.5	10'- 9 1/4"	110	2.6	49'- 6"	1446	16.6	13'- 2 1/4"	141	3.2
3:1	12"	13'- 6"	178	1.6	1'- 9 3/4"	15	0.2	15'- 0"	189	1.8	2'- 0"	15	0.2	18'- 5"	237	2.2	2'- 5 3/4"	17	0.2
	15"	15'- 3"	212	1.9	2'- 3"	17	0.2	17'- 0"	223	2.1	2'- 6"	17	0.3	20'-10"	276	2.6	3'- 0 3/4"	20	0.3
	18"	17'- 1"	231	2.3	2'- 9"	19	0.3	19'- 1"	259	2.5	3'- 1"	29	0.3	23'- 4"	318	3.1	3'- 9 1/4"	32	0.4
	21"	18'-11"	306	2.7	3'- 2 1/4"	31	0.4	21'- 1"	339	3.0	3'- 6 3/4"	33	0.4	25'-10"	413	3.7	4'- 4 1/4"	36	0.5
	24"	20'- 8"	345	3.1	3'- 8 3/4"	35	0.4	23'- 1"	384	3.5	4'- 1 3/4"	36	0.5	28'- 3"	462	4.2	5'- 0 3/4"	40	0.6
	27"	22'- 6"	376	3.7	4'- 0 3/4"	38	0.5	25'- 1"	438	4.1	4'- 6 1/4"	39	0.6	30'- 9"	522	5.0	5'- 6 1/4"	44	0.7
	30"	24'- 4"	422	4.1	4'- 5 3/4"	40	0.6	27'- 2"	466	4.6	5'- 0"	42	0.6	33'- 3"	578	5.6	6'- 1 3/4"	47	0.8
	33"	26'- 2"	476	4.8	4'-10"	43	0.6	29'- 2"	522	5.3	5'- 4 3/4"	46	0.7	35'- 9"	644	6.5	6'- 7 1/4"	51	0.9
	36"	27'-11"	590	5.9	5'- 3 1/4"	47	0.8	31'- 2"	645	6.6	5'-10 3/4"	50	0.9	38'- 2"	787	8.0	7'- 2 1/4"	56	1.2
	42"	31'- 7"	684	7.3	6'- 0 1/4"	53	1.1	35'- 3"	776	8.2	6'- 8 3/4"	56	1.2	43'- 2"	933	10.0	8'- 3"	79	1.4
	48"	36'- 9"	880	9.6	6'- 9 3/4"	61	1.3	41'- 0"	953	10.7	7'- 7 1/4"	81	1.5	50'- 2"	1166	13.1	9'- 3 3/4"	88	1.8
	54"	40'- 5"	1065	11.4	7'- 9"	85	1.6	45'- 0"	1185	12.7	8'- 8"	89	1.8	55'- 2"	1435	15.5	10'- 7 1/4"	97	2.2
	60"	44'- 0"	1224	13.3	8'- 6 1/4"	93	1.9	49'- 1"	1356	14.8	9'- 6 1/4"	96	2.1	60'- 1"	1627	18.2	11'- 8"	124	2.6
	66"	47'- 7"	1357	15.4	9'- 1"	98	2.1	53'- 1"	1497	17.2	10'- 1 1/4"	103	2.3	65'- 1"	1834	21.1	12'- 4 1/4"	130	2.9
	72"	51'- 3"	1624	17.7	9'- 8"	105	2.3	57'- 2"	1787	19.7	10'- 9 1/4"	109	2.6	70'- 0"	2210	24.1	13'- 2 1/4"	139	3.2
4:1	12"	17'- 7"	232	2.1	1'- 9 3/4"	15	0.2	19'- 8"	259	2.4	2'- 0"	16	0.2	24'- 0"	314	2.9	2'- 5 3/4"	18	0.2
	15"	19'-11"	272	2.5	2'- 3"	17	0.2	22'- 3"	301	2.8	2'- 6"	18	0.3	27'- 3"	361	3.5	3'- 0 3/4"	21	0.3
	18"	22'- 3"	313	3.0	2'- 9"	19	0.3	24'-10"	344	3.3	3'- 1"	29	0.3	30'- 5"	427	4.0	3'- 9 1/4"	32	0.4
	21"	24'- 7"	407	3.6	3'- 2 1/4"	31	0.4	27'- 5"	446	4.0	3'- 6 3/4"	33	0.4	33'- 7"	549	4.9	4'- 4 1/4"	36	0.5
	24"	26'-11"	455	4.1	3'- 8 3/4"	35	0.4	30'- 0"	499	4.5	4'- 1 3/4"	36	0.5	36'- 9"	609	5.6	5'- 0 3/4"	40	0.6
	27"	29'- 3"	514	4.8	4'- 0 3/4"	38	0.5	32'- 7"	562	5.4	4'- 6 1/4"	40	0.6	39'-11"	703	6.6	5'- 6 1/4"	43	0.7
	30"	31'- 7"	568	5.4	4'- 5 3/4"	40	0.6	35'- 3"	620	6.0	5'- 0"	42	0.6	43'- 2"	768	7.4	6'- 1 3/4"	49	0.8
	33"	33'-11"	634	6.2	4'-10"	43	0.7	37'-10"	710	7.0	5'- 4 3/4"	46	0.7	46'- 4"	848	8.5	6'- 7 1/4"	52	0.9
	36"	36'- 3"	776	7.7	5'- 3"	48	0.9	40'- 5"	868	8.6	5'-10 3/4"	49	0.9	49'- 6"	1058	10.6	7'- 2 1/4"	56	1.1
	42"	40'-11"	921	9.6	6'- 0 1/4"	53	1.0	45'- 7"	1022	10.7	6'- 8 3/4"	57	1.2	55'-10"	1262	13.1	8'- 3"	78	1.4
	48"	47'- 7"	1152	12.6	6'-10"	61	1.3	53'- 1"	1268	14.0	7'- 7 1/4"	80	1.5	65'- 1"	1579	17.2	9'- 3 3/4"	86	1.8
	54"	52'- 3"	1416	14.9	7'- 9 1/4"	86	1.6	58'- 4"	1589	16.6	8'- 8"	89	1.8	71'- 5"	1916	20.4	10'- 7 1/4"	95	2.2
	60"	56'-11"	1606	17.5	8'- 6 3/4"	92	1.9	63'- 6"	1798	19.5	9'- 6 1/4"	95	2.1	77'- 9"	2184	23.9	11'- 8"	122	2.6
	66"	61'- 7"	1811	20.2	9'- 0 3/4"	97	2.1	68'- 8"	2011	22.5	10'- 1 1/4"	101	2.4	84'- 2"	2464	27.6	12'- 4 1/4"	131	2.9
	72"	66'- 3"	2142	23.2	9'- 8"	104	2.4	73'-11"	2371	25.9	10'- 9 1/4"	108	2.6	90'- 6"	2929	31.7	13'- 2 1/4"	138	3.2
6:1	12"	25'-11"	342	3.1	1'- 9 3/4"	15	0.2	28'-10"	374	3.5	2'- 0"	16	0.2	35'- 4"	456	4.3	2'- 5 3/4"	17	0.2
	15"	29'- 3"	390	3.7	2'- 3"	17	0.2	32'- 7"	442	4.2	2'- 6"	18	0.2	39'-11"	549	5.1	3'- 0 3/4"	20	0.3
	18"	32'- 7"	459	4.4	2'- 9"	20	0.3	36'- 4"	515	4.9	3'- 1"	29	0.3	44'- 7"	629	6.0	3'- 9 1/4"	33	0.4
	21"	36'- 0"	608	5.3	3'- 2 1/4"	31	0.4	40'- 2"	660	5.9	3'- 6 3/4"	33	0.4	49'- 2"	823	7.2	4'- 4 1/4"	38	0.5
	24"	39'- 4"	672	6.0	3'- 8 3/4"	35	0.4	43'-11"	748	6.7	4'- 1 3/4"	36	0.5	53'- 9"	920	8.2	5'- 0 3/4"	42	0.6
	27"	42'- 8"	770	7.1	4'- 0 3/4"	38	0.5	47'- 8"	852	8.0	4'- 6 1/4"	41	0.5	58'- 4"	1039	9.7	5'- 6 1/4"	45	0.7
	30"	46'- 1"	839	8.0	4'- 5 3/4"	40	0.6	51'- 5"	949	8.9	5'- 0"	44	0.6	62'-11"	1154	10.9	6'- 1 3/4"	48	0.8
	33"	49'- 5"	947	9.2	4'-10"	45	0.7	55'- 2"	1040	10.3	5'- 4 3/4"	48	0.7	67'- 6"	1284	12.6	6'- 7 1/4"	50	0.9
	36"	52'-10"	1151	11.4	5'- 3"	49	0.8	58'-11"	1287	12.7	5'-10 3/4"	51	1.0	72'- 1"	1575	15.6	7'- 2 1/4"	55	1.1
	42"	59'- 6"	1365	14.2	6'- 0 1/4"	55	1.0	66'- 5"	1522	15.8	6'- 8 3/4"	57	1.2	81'- 4"	1867	19.4	8'- 3"	76	1.4
	48"	69'- 4"	1729	18.5	6'-10"	59	1.3	77'- 4"	1934	20.7	7'- 7 1/4"	79	1.5	94'- 9"	2360	25.3	9'- 3 3/4"	86	1.8
	54"	76'- 1"	2130	22.0	7'- 9 1/4"	83	1.6	84'-10"	2370	24.6	8'- 8"	87	1.8	103'-11"	2904	30.1	10'- 7 1/4"	95	2.2
	60"	82'-10"	2414	25.8	8'- 6 3/4"	90	1.9	92'- 5"	2673	28.8	9'- 6 1/4"	94	2.1	113'-2"	3286	35.3	11'- 8"	122	2.6
	66"	89'- 7"	2712	29.9	9'- 0 3/4"	96	2.1	99'-11"	3030	33.3	10'- 1 1/4"	101	2.4	122'-4"	3689	40.8	12'- 4 1/4"	130	2.9
	72"	96'- 3"	3210	34.2	9'- 8"	102	2.4	107'-5"	3572	38.2	10'- 9 1/4"	108	2.6	131'-6"	4364	46.8	13'- 2 1/4"	139	3.2

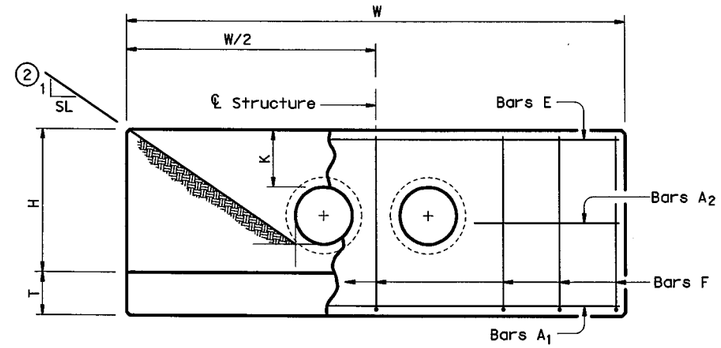

ELEVATION

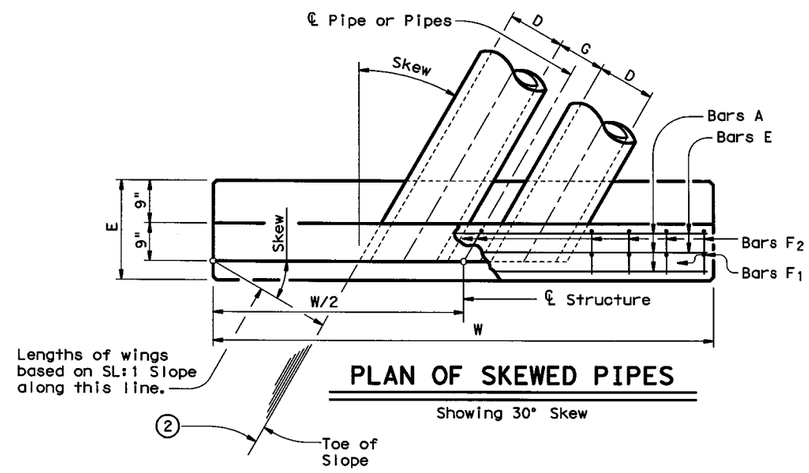

PLAN OF SKEWED PIPES

Showing 30° Skew

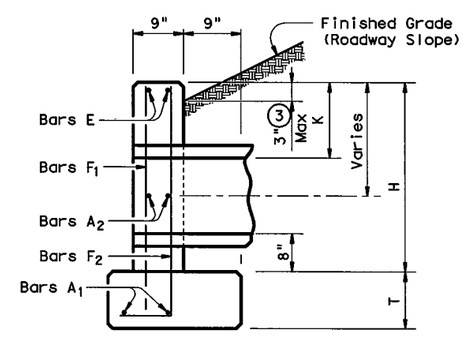

℄ SECTION

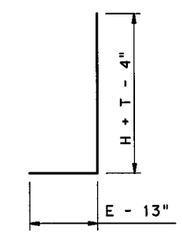

BARS F2

TABLE OF CONSTANT DIMENSIONS

DIA OF PIPE, D	G	K	H	T	E
12"	9"	1'- 0"	2'- 8"	9"	1'- 9"
15"	11"	1'- 0"	2'-11"	9"	1'- 9"
18"	1'- 2"	1'- 0"	3'- 2"	9"	1'- 9"
21"	1'- 4"	1'- 0"	3'- 5"	9"	2'- 0"
24"	1'- 7"	1'- 0"	3'- 8"	9"	2'- 0"
27"	1'- 8"	1'- 0"	3'-11"	9"	2'- 3"
30"	1'-10"	1'- 0"	4'- 2"	9"	2'- 3"
33"	1'-11"	1'- 0"	4'- 5"	9"	2'- 6"
36"	2'- 1"	1'- 0"	4'- 8"	1'- 0"	2'- 6"
42"	2'- 4"	1'- 0"	5'- 2"	1'- 0"	2'- 9"
48"	2'- 7"	1'- 3"	5'-11"	1'- 0"	3'- 0"
54"	3'- 0"	1'- 3"	6'- 5"	1'- 0"	3'- 3"
60"	3'- 3"	1'- 3"	6'-11"	1'- 0"	3'- 6"
66"	3'- 3"	1'- 3"	7'- 5"	1'- 0"	3'- 9"
72"	3'- 4"	1'- 3"	7'-11"	1'- 0"	4'- 0"

TABLE OF REINFORCING STEEL (4)

Bar	Size	Spa	No.
A1	# 5	~	2
A2	# 5	1'-6"	~
E	# 5	~	2
F	# 5	1'-0"	~

GENERAL NOTES:

Designed according to AASHTO LRFD Specifications.

Reinforcing steel shall be placed with the center of the outside layer of bars 2" from the surface of the concrete.

All reinforcing steel shall be Grade 60.

All concrete shall be Class "C" and shall have a minimum compressive strength of 3600 psi.

No bridge rails of any type may be mounted directly to these culvert headwalls.

(1) Quantities shown are for concrete pipe and will increase slightly for metal pipe installations.

(2) Indicated slope is perpendicular to centerline Pipe or Pipes.

(3) For vehicle safety, curbs shall project no more than 3" above finished grade. Curb heights shall be reduced, if necessary, to meet these requirements. No changes will be made in quantities and no additional compensation will be allowed for this work.

(4) Quantities shown are for one structure end only (one headwall).

DISCLAIMER:
The use of this standard is governed by the "Texas Engineering Practice Act". No warranty of any kind is made by TxDOT for any purpose whatsoever. TxDOT assumes no responsibility for the conversion of this standard to other formats or for incorrect results or damages resulting from its use.

LEVELS DISPLAYED

1	2	3	4	5	6	7	8	9	10	11	12	13	14	15	16
17	18	19	20	21	22	23	24	25	26	27	28	29	30	31	32
33	34	35	36	37	38	39	40	41	42	43	44	45	46	47	48
49	50	51	52	53	54	55	56	57	58	59	60	61	62	63	

ACC:

Texas Department of Transportation
Bridge Division

CONCRETE HEADWALLS WITH PARALLEL WINGS FOR SKEWED PIPE CULVERTS

CH-PW-S

FILE: chpwsste.dgn	DN: TxDOT	CK: TxDOT	DW: TxDOT	CK: GAF	
©TxDOT February 2010	DISTRICT	FEDERAL AID PROJECT			SHEET
REVISIONS	FTW	255, ETC.			1310
	COUNTY		CONTROL	SECT	JOB	HIGHWAY
	TARRANT		0014	16	255	IH 35W

BOX DATA

SECTION DIMENSIONS S (ft)	H (ft)	T_T (in)	T_B (in)	T_S (in)	Fill Height (ft)	M (Min) (in)	REINFORCING (in^2/ft) ② A_{S1}	A_{S2}	A_{S3}	A_{S4}	A_{S5}	A_{S6}	A_{S7}	A_{S8}	① Lift Weight (Tons)
3	2	7	6	4	<2	-	0.17	0.25	0.16	0.10	0.17	0.17	0.17	0.14	3.3
3	2	4	4	4	2<3	31	0.13	0.19	0.18	0.10	-	-	-	-	2.4
3	2	4	4	4	3-5	31	0.10	0.11	0.12	0.10	-	-	-	-	2.4
3	2	4	4	4	10	31	0.10	0.10	0.10	0.10	-	-	-	-	2.4
3	2	4	4	4	15	31	0.10	0.13	0.13	0.10	-	-	-	-	2.4
3	2	4	4	4	20	31	0.11	0.17	0.17	0.10	-	-	-	-	2.4
3	2	4	4	4	25	31	0.14	0.21	0.21	0.10	-	-	-	-	2.4
3	2	4	4	4	30	31	0.17	0.25	0.25	0.10	-	-	-	-	2.4
3	2	4	4	4	35	31	0.20	0.29	0.30	0.10	-	-	-	-	2.4
3	3	7	6	4	<2	-	0.17	0.27	0.17	0.10	0.17	0.17	0.17	0.14	3.7
3	3	4	4	4	2<3	31	0.10	0.22	0.21	0.10	-	-	-	-	2.8
3	3	4	4	4	3-5	31	0.10	0.14	0.14	0.10	-	-	-	-	2.8
3	3	4	4	4	10	31	0.10	0.11	0.11	0.10	-	-	-	-	2.8
3	3	4	4	4	15	31	0.10	0.14	0.15	0.10	-	-	-	-	2.8
3	3	4	4	4	20	31	0.10	0.18	0.19	0.10	-	-	-	-	2.8
3	3	4	4	4	25	31	0.10	0.23	0.23	0.10	-	-	-	-	2.8
3	3	4	4	4	30	31	0.12	0.27	0.28	0.10	-	-	-	-	2.8
3	3	4	4	4	35	31	0.14	0.32	0.32	0.10	-	-	-	-	2.8

① For Box Length = 8'-0"

② A_{S1} thru A_{S4}, A_{S7} and A_{S8} are minimum required areas of reinforcement per linear foot of box length. A_{S6} and A_{S5} are minimum required areas of reinforcement per linear foot of box width.

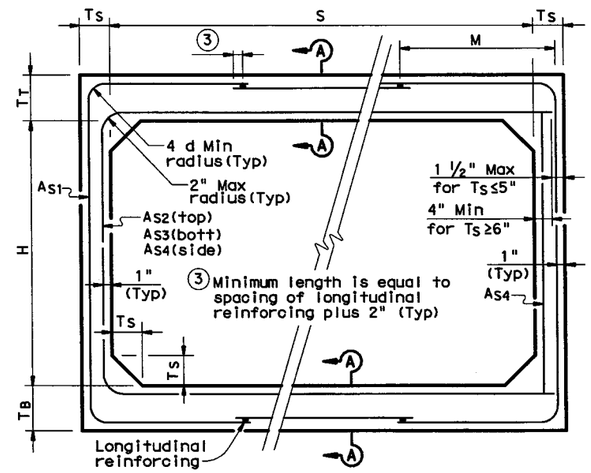

CORNER OPTION "A" CORNER OPTION "B"

FILL HEIGHT 2 FT AND GREATER

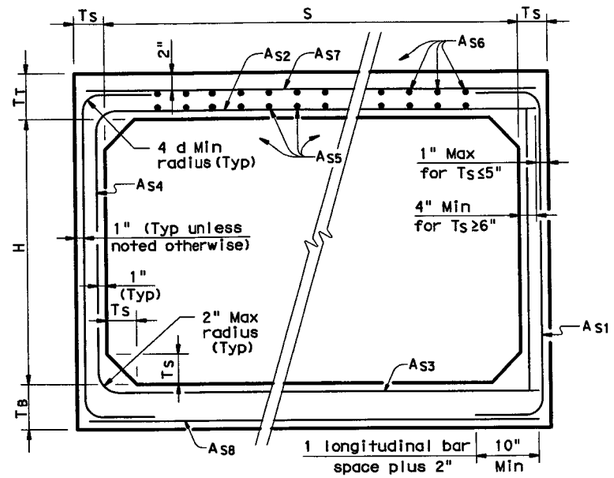

CORNER OPTION "A" CORNER OPTION "B"

FILL HEIGHT LESS THAN 2 FT

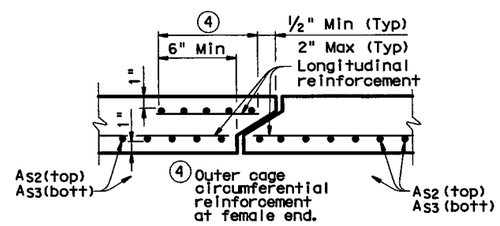

SECTION A-A

(TOP AND BOTTOM SLAB JOINT REINFORCEMENT)

GENERAL NOTES:

Designs shown conform to ASTM C1577.

Refer to ASTM C1577 for information or details not shown.

All concrete shall be Class "H" Concrete with a minimum compressive strength of 5,000 psi.

See SCP-MD standard sheet for miscellaneous details and notes not shown.

In lieu of furnishing the designs shown on this sheet, the contractor may furnish an alternate design that is equal to or exceeds the box design for the design fill height in the table. Shop plans for alternate designs shall be submitted in accordance with Item "Precast Concrete Structures".

HL93 LOADING

Texas Department of Transportation
Bridge Division

SINGLE BOX CULVERTS PRECAST

3'-0" SPAN

SCP-3

FILE: scp03ste.dgn	DN: GAF	CK: LMW	DW: BWH/TxDOT	CK: GAF
© TxDOT February 2010	DISTRICT	FEDERAL AID PROJECT		SHEET
REVISIONS	FTW	(SEE TITLE SHEET)		1311

COUNTY	CONTROL	SECT	JOB	HIGHWAY
TARRANT	0014	16	255	IH 35W

DISCLAIMER:
The use of this standard is governed by the "Texas Engineering Practice Act". No warranty of any kind is made by TxDOT for any purpose whatsoever. TxDOT assumes no responsibility for the conversion of this standard to other formats or for incorrect results or damages resulting from its use.

ACC:

LEVELS DISPLAYED

BOX DATA

SECTION DIMENSIONS S (ft)	H (ft)	T_T (in)	T_B (in)	T_S (in)	Fill Height (ft)	M (Min) (in)	REINFORCING (in^2/ft) ② A_{S1}	A_{S2}	A_{S3}	A_{S4}	A_{S5}	A_{S6}	A_{S7}	A_{S8}	① Lift Weight (Tons)
4	2	7.5	6	5	<2	-	0.18	0.27	0.15	0.12	0.18	0.18	0.18	0.14	4.5
4	2	5	5	5	2<3	38	0.18	0.19	0.17	0.12	-	-	-	-	3.6
4	2	5	5	5	3-5	38	0.13	0.13	0.13	0.12	-	-	-	-	3.6
4	2	5	5	5	10	38	0.12	0.12	0.12	0.12	-	-	-	-	3.6
4	2	5	5	5	15	38	0.14	0.16	0.16	0.12	-	-	-	-	3.6
4	2	5	5	5	20	38	0.18	0.20	0.21	0.12	-	-	-	-	3.6
4	2	5	5	5	25	38	0.23	0.25	0.25	0.12	-	-	-	-	3.6
4	2	5	5	5	30	38	0.28	0.30	0.30	0.12	-	-	-	-	3.6
4	3	7.5	6	5	<2	-	0.18	0.31	0.18	0.12	0.18	0.18	0.18	0.14	5.0
4	3	5	5	5	2<3	38	0.15	0.23	0.20	0.12	-	-	-	-	4.1
4	3	5	5	5	3-5	38	0.12	0.16	0.16	0.12	-	-	-	-	4.1
4	3	5	5	5	10	38	0.12	0.14	0.14	0.12	-	-	-	-	4.1
4	3	5	5	5	15	38	0.12	0.18	0.18	0.12	-	-	-	-	4.1
4	3	5	5	5	20	38	0.14	0.23	0.24	0.12	-	-	-	-	4.1
4	3	5	5	5	25	38	0.17	0.29	0.29	0.12	-	-	-	-	4.1
4	3	5	5	5	30	38	0.21	0.35	0.35	0.12	-	-	-	-	4.1
4	4	7.5	6	5	<2	-	0.18	0.33	0.20	0.12	0.18	0.18	0.18	0.14	5.5
4	4	5	5	5	2<3	38	0.12	0.26	0.23	0.12	-	-	-	-	4.6
4	4	5	5	5	3-5	38	0.12	0.18	0.18	0.12	-	-	-	-	4.6
4	4	5	5	5	10	38	0.12	0.15	0.15	0.12	-	-	-	-	4.6
4	4	5	5	5	15	38	0.12	0.19	0.20	0.12	-	-	-	-	4.6
4	4	5	5	5	20	38	0.12	0.25	0.25	0.12	-	-	-	-	4.6
4	4	5	5	5	25	38	0.14	0.31	0.31	0.12	-	-	-	-	4.6
4	4	5	5	5	30	38	0.17	0.37	0.37	0.12	-	-	-	-	4.6

① For Box Length = 8'-0"

② A_{S1} thru A_{S4}, A_{S7} and A_{S8} are minimum required areas of reinforcement per linear foot of box length. A_{S6} and A_{S5} are minimum required areas of reinforcement per linear foot of box width.

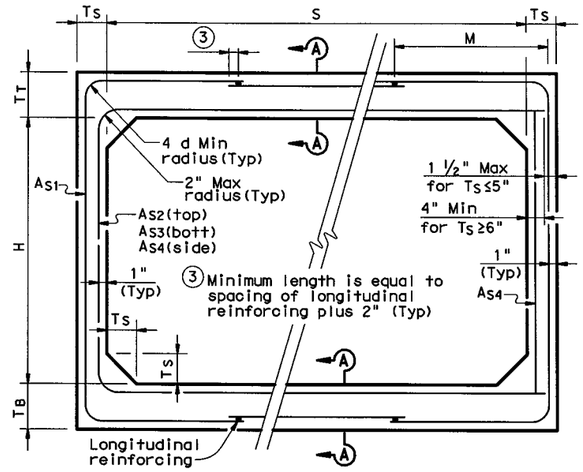

CORNER OPTION "A" CORNER OPTION "B"

FILL HEIGHT 2 FT AND GREATER

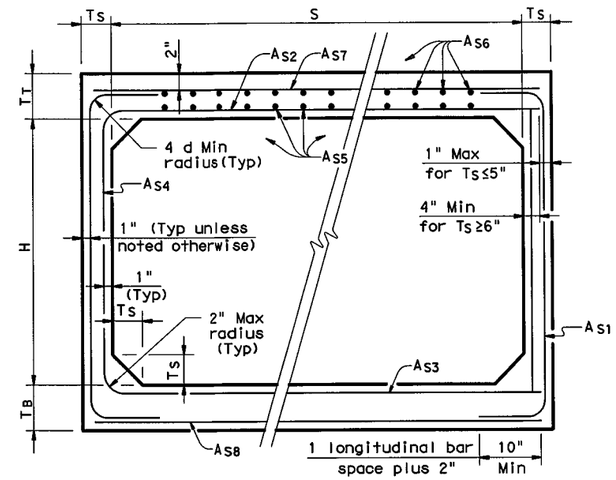

CORNER OPTION "A" CORNER OPTION "B"

FILL HEIGHT LESS THAN 2 FT

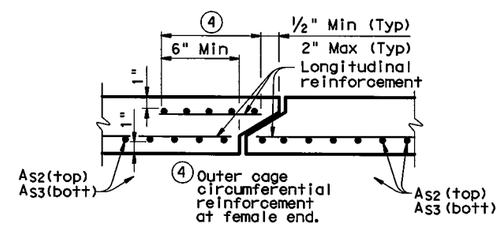

SECTION A-A

(TOP AND BOTTOM SLAB JOINT REINFORCEMENT)

GENERAL NOTES:

Designs shown conform to ASTM C1577.
Refer to ASTM C1577 for information or details not shown.
All concrete shall be Class "H" Concrete with a minimum compressive strength of 5,000 psi.
See SCP-MD standard sheet for miscellaneous details and notes not shown.
In lieu of furnishing the designs shown on this sheet, the contractor may furnish an alternate design that is equal to or exceeds the box design for the design fill height in the table. Shop plans for alternate designs shall be submitted in accordance with Item "Precast Concrete Structures".

HL93 LOADING

Texas Department of Transportation
Bridge Division

SINGLE BOX CULVERTS PRECAST
4'-0" SPAN

SCP-4

FILE: scp04ste.dgn	DN: GAF	CK: LMW	DW: BWH/TxDOT	CK: GAF	
©TxDOT February 2010	DISTRICT	FEDERAL AID PROJECT			SHEET
REVISIONS	FTW	255, ETC.			1312
	COUNTY		CONTROL	SECT	JOB	HIGHWAY
	TARRANT		0014	16	255	IH 35W

DISCLAIMER:
The use of this standard is governed by the "Texas Engineering Practice Act". No warranty of any kind is made by TxDOT for any purpose whatsoever. TxDOT assumes no responsibility for the conversion of this standard to other formats or for incorrect results or damages resulting from its use.

LEVELS DISPLAYED
1 2 3 4 5 6 7 8 9 10 11 12 13 14 15 16
17 18 19 20 21 22 23 24 25 26 27 28 29 30 31 32
33 34 35 36 37 38 39 40 41 42 43 44 45 46 47 48
49 50 51 52 53 54 55 56 57 58 59 60 61 62 63

ACC:

DISCLAIMER:
The use of this standard is governed by the "Texas Engineering Practice Act". No warranty of any kind is made by TxDOT for any purpose whatsoever. TxDOT assumes no responsibility for the conversion of this standard to other formats or for incorrect results or damages resulting from its use.

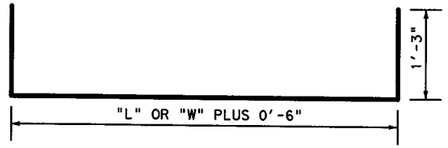

BARS A & BARS A2

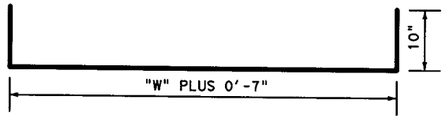

BARS D2

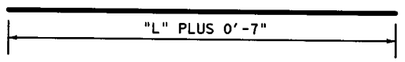

BARS D

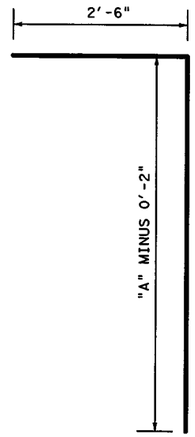

BARS C

PIPE DIA.	CONC. REDUCTION ONE PIPE C.Y.
15	0.05
18	0.07
21	0.10
24	0.12
27	0.15
30	0.18
33	0.22
36	0.26
39	0.30
42	0.35
45	0.40
48	0.45
54	0.57
60	0.70
66	0.84
72	1.00
78	1.16

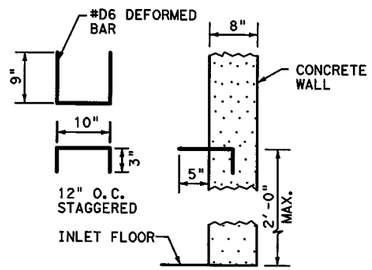

STEPS

TABLE OF QUANTITIES WITH NO DEDUCTIONS FOR PIPES OR INLET OPENINGS

MAX. PIPE DIA.	HEIGHT OF STR. "A"	LENGTH OF STR. "L"	WIDTH OF STR. "W"	STEPS # 6 12 ±		BILL OF #4 REINFORCING STEEL																			
						BARS A 12 ±		BARS A2 12 ±		BARS B 12 ±		BARS B2 12" ±		BARS C 6 ±		BARS D 12" ±		BARS D2 12" ±		BARS E ~		REINF. STEEL LB.	CLASS A CONC. * C.Y.
				No.	LENGTH	No.	LENGTH	No.	LENGTH	No.	LENGTH	No.	LENGTH	No.	LENGTH	No.	LENGTH	No.	LENGTH	No.	LENGTH		
42"	4'-9"	4'-4"	4'-4"	2	2'-10"	6	7'-4"	6	7'-4"	6	4'-10"	6	4'-10"	40	7'-1"	10	4'-11"	10	6'-7"	4	4'-10"	384	3.66
48"	5'-3"	4'-11"	"	3	"	"	7'-11"	7	"	"	5'-5"	"	"	42	7'-7"		5'-6"		"	"	"	430	4.21
54"	5'-9"	5'-6"	"	-	"	"	8'-6"	-	"	"	6'-0"	"	"	44	8'-1"	12	6'-1"	12	"	"	"	480	4.79
60"	6'-3"	6'-1"	"	4	"	"	9'-1"	8	"	"	6'-7"	"	"	46	8'-7"		6'-8"		"	"	"	528	5.40
66"	6'-9"	6'-8"	"	-	"	"	9'-8"	-	"	"	7'-2"	"	"	48	9'-1"	14	7'-3"	14	"	"	"	583	6.03
72"	7'-3"	7'-3"	"	5	"	"	10'-3"	9	"	"	7'-9"	"	"	50	9'-7"		7'-10"		"	"	"	640	6.70
78"	7'-9"	7'-10"	"	-	"	"	10'-10"	-	"	"	8'-4"	"	"	52	10'-1"	16	8'-5"	16	"	"	"	695	7.39
48"	5'-3"	4'-11"	4'-11"	3	2'-10"	7	7'-11"	7	7'-11"	7	5'-5"	7	5'-5"	44	7'-7"	10	5'-6"	10	7'-2"	4	4'-10"	458	4.53
54"	5'-9"	5'-6"	"	-	"	"	8'-6"	-	"	"	6'-0"	"	"	46	8'-1"	12	6'-1"	12	"	"	"	506	5.14
60"	6'-3"	6'-1"	"	4	"	"	9'-1"	8	"	"	6'-7"	"	"	48	8'-7"		6'-8"		"	"	"	561	5.78
66"	6'-9"	6'-8"	"	-	"	"	9'-8"	-	"	"	7'-2"	"	"	50	9'-1"	14	7'-3"	14	"	"	"	618	6.45
72"	7'-3"	7'-3"	"	5	"	"	10'-3"	9	"	"	7'-9"	"	"	52	9'-7"		7'-10"		"	"	"	672	7.15
78"	7'-9"	7'-10"	"	-	"	"	10'-10"	-	"	"	8'-4"	"	"	54	10'-1"	16	8'-5"	16	"	"	"	724	7.87
54"	5'-9"	5'-6"	5'-6"	3	2'-10"	7	8'-6"	7	8'-6"	7	6'-0"	7	6'-0"	48	8'-1"	12	6'-1"	12	7'-9"	4	4'-10"	532	5.50
60"	6'-3"	6'-1"	"	4	"	"	9'-1"	8	"	"	6'-7"	"	"	50	8'-7"		6'-8"		"	"	"	583	6.17
66"	6'-9"	6'-8"	"	-	"	"	9'-8"	-	"	"	7'-2"	"	"	52	9'-1"	14	7'-3"	14	"	"	"	642	6.87
72"	7'-3"	7'-3"	"	5	"	"	10'-3"	9	"	"	7'-9"	"	"	54	9'-7"		7'-10"		"	"	"	692	7.60
78"	7'-9"	7'-10"	"	-	"	"	10'-10"	-	"	"	8'-4"	"	"	56	10'-1"	16	8'-5"	16	"	"	"	762	8.36
60"	6'-3"	6'-1"	6'-1"	4	2'-10"	8	9'-1"	8	9'-1"	8	6'-7"	8	6'-7"	52	8'-7"	12	6'-8"	12	8'-4"	4	4'-10"	616	6.55
66"	6'-9"	6'-8"	"	-	"	"	9'-8"	-	"	"	7'-2"	"	"	54	9'-1"	14	7'-3"	14	"	"	"	677	7.29
72"	7'-3"	7'-3"	"	5	"	"	10'-3"	9	"	"	7'-9"	"	"	56	9'-7"		7'-10"		"	"	"	734	8.05
78"	7'-9"	7'-10"	"	-	"	"	10'-10"	-	"	"	8'-4"	"	"	58	10'-1"	16	8'-5"	16	"	"	"	801	8.84
66"	6'9"	6'-8"	6'-8"	4	2'-10"	8	9'-8"	8	9'-8"	8	7'-2"	8	7'-2"	56	9'-1"	14	7'-3"	14	8'-11"	4	4'-10"	701	7.70
72"	7'-3"	7'-3"	"	5	"	"	10'-3"	9	"	"	7'-9"	"	"	58	9'-7"		7'-10"		"	"	"	760	8.50
78"	7'-9"	7'-10"	"	-	"	"	10'-10"	-	"	"	8'-4"	"	"	60	10'-1"	16	8'-5"	16	"	"	"	827	9.32
72"	7'-3"	7'-3"	7'-3"	5	2'-10"	9	10'-3"	9	10'-3"	9	7'-9"	9	7'-9"	60	9'-7"	14	7'-10"	14	9'-6"	4	4'-10"	798	8.95
78"	7'-9"	7'-10"	"	-	"	"	10'-10"	-	"	"	8'-4"	"	"	62	10'-1"	16	8'-5"	16	"	"	"	868	9.80
78"	7'-9"	7'-10"	7'-10"	5	2'-10"	9	10'-10"	9	10'-10"	9	8'-4"	9	8'-4"	64	10'-1"	16	8'-5"	16	10'-1"	4	4'-10"	893	10.29

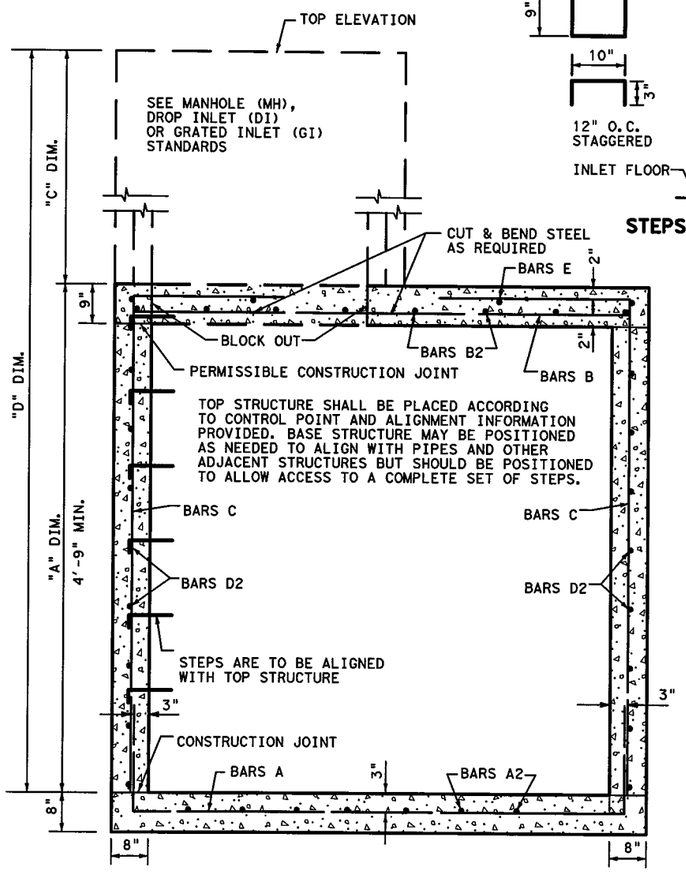

TYPICAL SECTION - LENGTH VIEW

WIDTH VIEW SIMILAR

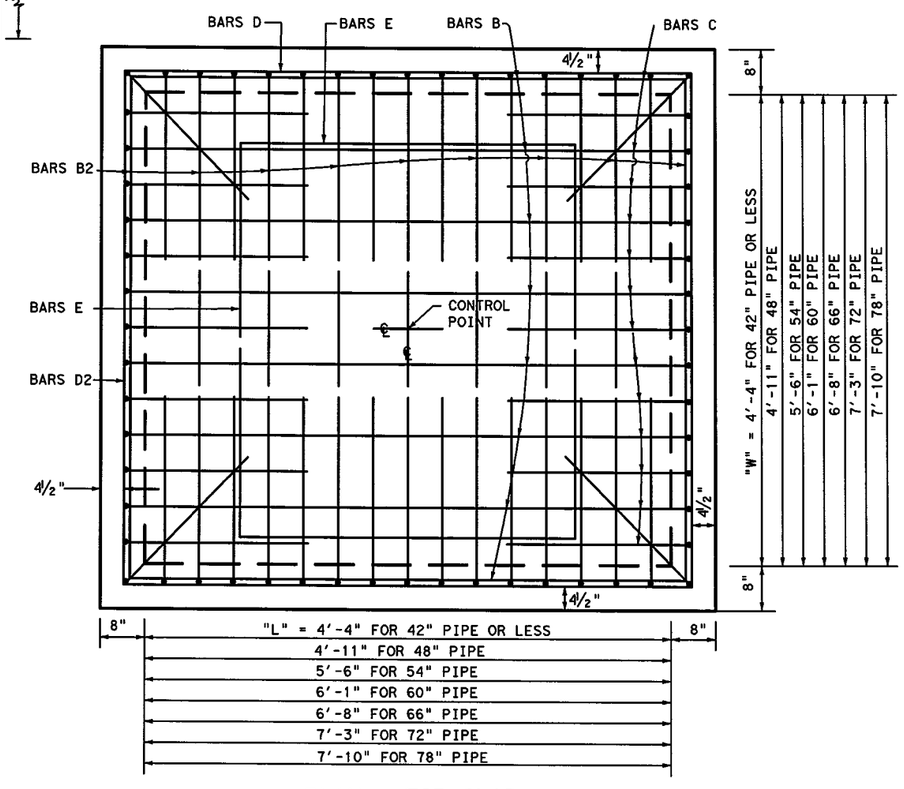

PLAN - TOP SLAB

(BLOCK OUT NOT SHOWN)

NOTE:

FOR 36" DIAMETER INLET OPENING DEDUCT 0.20 C.Y. CONCRETE.
FOR 48" DIAMETER INLET OPENING DEDUCT 0.35 C.Y. CONCRETE.
FOR 3' X 2' INLET OPENING DEDUCT 0.17 C.Y. CONCRETE.
FOR 3' X 3' INLET OPENING DEDUCT 0.25 C.Y. CONCRETE.
FOR 3'- 4"X 3' INLET OPENING DEDUCT 0.28 C.Y. CONCRETE.

GENERAL NOTES:

1. ALL CONCRETE SHALL BE CLASS "A".
2. DIMENSIONS RELATING TO REINFORCING STEEL ARE TO CENTER OF BARS.
3. FIELD CUT AND BEND BARS AS REQUIRED TO ACCOMMODATE PIPES AND INLET EXTENSIONS.
4. CONSTRUCTION JOINT AT FLOWLINE MAY BE RAISED A MAXIMUM OF 6" AT OPTION OF THE CONTRACTOR. ADJUST LENGTH OF VERTICAL STEEL AS REQUIRED WITH A 20 DIAMETER LAP.
5. WHERE IT IS CONSIDERED NECESSARY, BARS CUT OUT TO PROVIDE OPENINGS FOR PIPE MAY BE BENT AND USED TO PROVIDE A BETTER TIE FOR EXTENSIONS AND PIPE AS DIRECTED BY THE ENGINEER.
6. WHEN STRUCTURE IS COMBINED WITH UPPER STRUCTURE, THE STRUCTURE LOCATION SHOWN IN THE PLANS REFERS TO THE CONTROL POINT OF THE UPPER STRUCTURE. WHEN STRUCTURE IS NOT COMBINED WITH UPPER STUCTURE, THE LOCATION SHOWN IN THE PLANS REFERS TO THE CONTROL POINT SHOWN ON THIS SHEET.
7. WHEN USED WITH INLET OR MANHOLE, MEASURE AND PAY FOR JUNCTION BOX AND INLET OR MANHOLE SEPARATELY.

REVISIONS: 10/09-Added note to pay for inlet or manhole separately

Texas Department of Transportation
FORT WORTH DISTRICT

© 2002 by Texas Department of Transportation; All Rights Reserved

JUNCTION BOX STRUCTURE
TYPE 1
JB-1-02 (FW)

ORIG DRAW DATE: 8/02	DESIGN:	FED. REG.	STATE	PROJ NO.			HIGHWAY
	CHECKED:	6	TEXAS	255, ETC.			133
	DRAWN:	DISTRICT	COUNTY	CONTROL	SECTION	JOB	SHEET
	CHECKED:	FTW	TARRANT	0014	16	255	IH 35W

http://www.dot.state.tx.us/ftw/specinfo/standard.htm jb102fw.dgn
LEVELS DISPLAYED

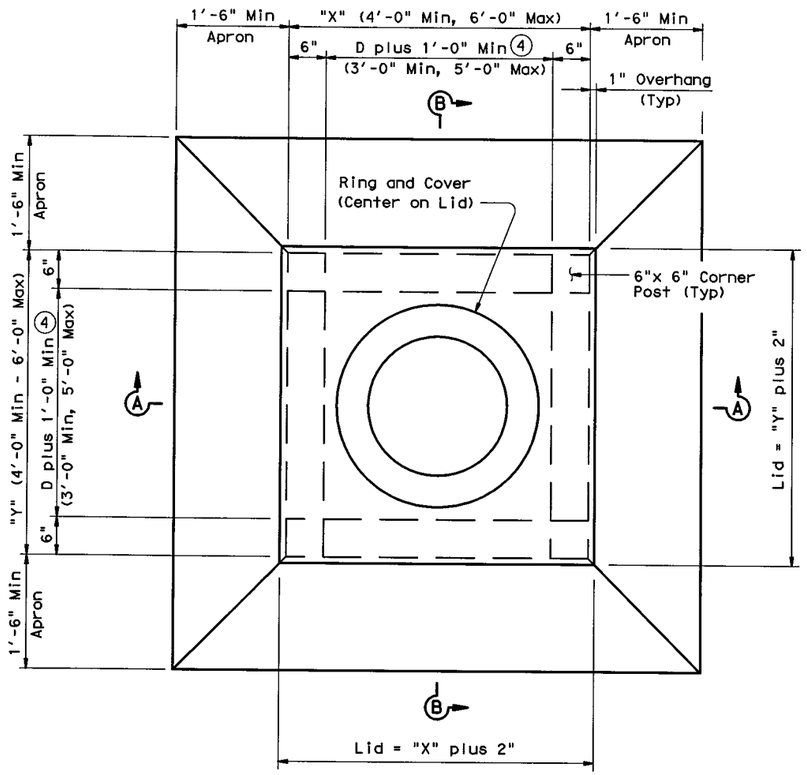

PLAN

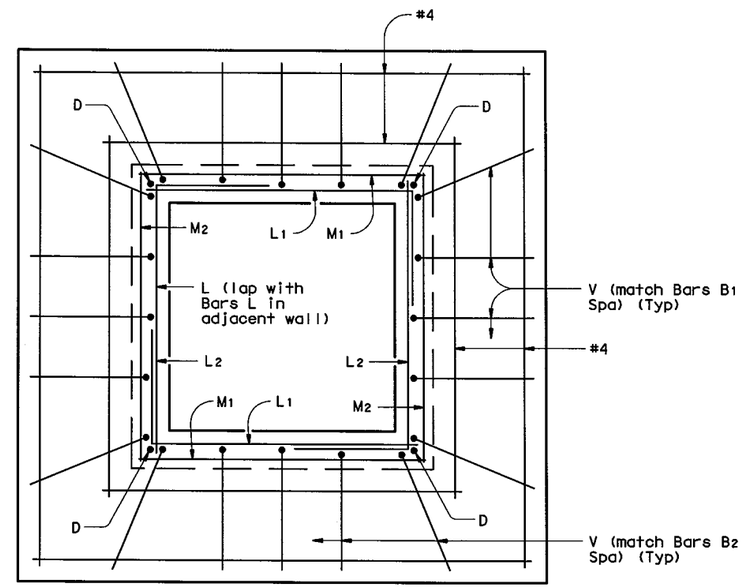

TYPICAL APRON PLAN

(Lid not shown for clarity. Showing reinforcing in walls and in apron.)

1. May be changed as directed by the Engineer.
2. Place layer of grout between lid and corner posts to provide stable seating of lid.
3. Center Dowels D in corner posts. (Typ)
4. D equals the maximum inside diameter of any pipe entering the wall shown or the opposite wall.
5. D equals the maximum inside diameter of any pipe entering the inlet.

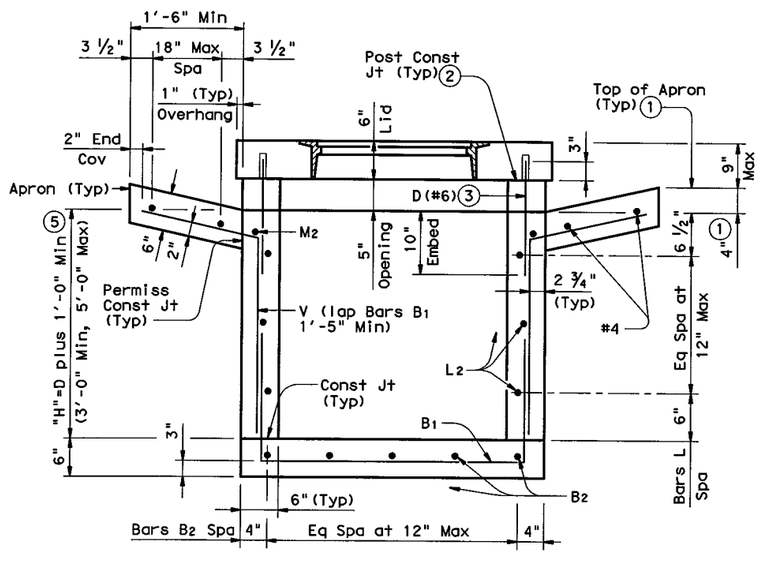

SECTION A-A

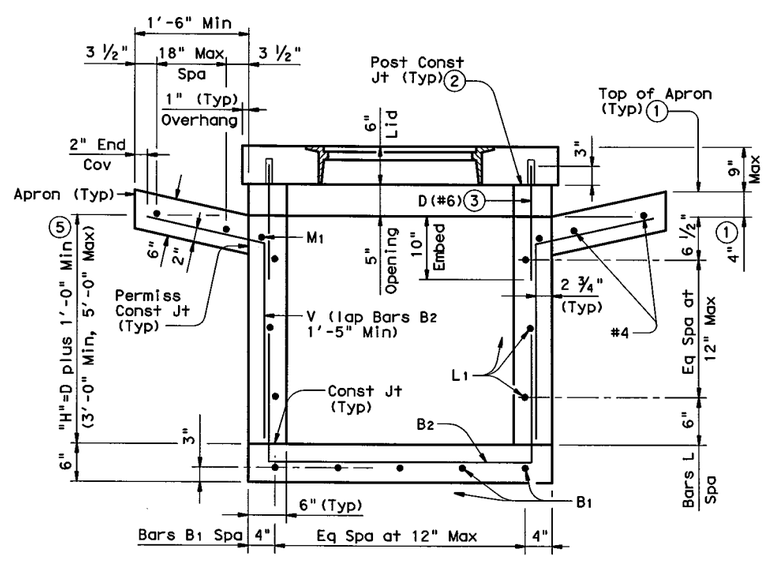

SECTION B-B

DISCLAIMER:
The use of this standard is governed by the "Texas Engineering Practice Act". No warranty of any kind is made by TxDOT for any purpose whatsoever. TxDOT assumes no responsibility for the conversion of this standard to other formats or for incorrect results or damages resulting from its use.

LEVELS DISPLAYED
1 2 3 4 5 6 7 8 9 10 11 12 13 14 15 16
17 18 19 20 21 22 23 24 25 26 27 28 29 30 31 32
33 34 35 36 37 38 39 40 41 42 43 44 45 46 47 48
49 50 51 52 53 54 55 56 57 58 59 60 61 62 63

PATH:

SHEET 1 OF 2

Texas Department of Transportation
Bridge Division

HORIZONTAL INLET TYPE H WITH LID (MAX 48" DIA PIPES)

IL-H-L

FILE: ilhste02.dgn	DN: TxDOT	CK: TxDOT	DW: TxDOT	CK: TxDOT		
©TxDOT February 2010	DISTRICT	FEDERAL AID PROJECT				SHEET
REVISIONS	FTW	255, ETC.				1314
	COUNTY		CONTROL	SECT	JOB	HIGHWAY
	TARRANT		0014	16	255	IH 35W

DISCLAIMER:
The use of this standard is governed by the "Texas Engineering Practice Act". No warranty of any kind is made by TxDOT for any purpose whatsoever. TxDOT assumes no responsibility for the conversion of this standard to other formats or for incorrect results or damages resulting from its use.

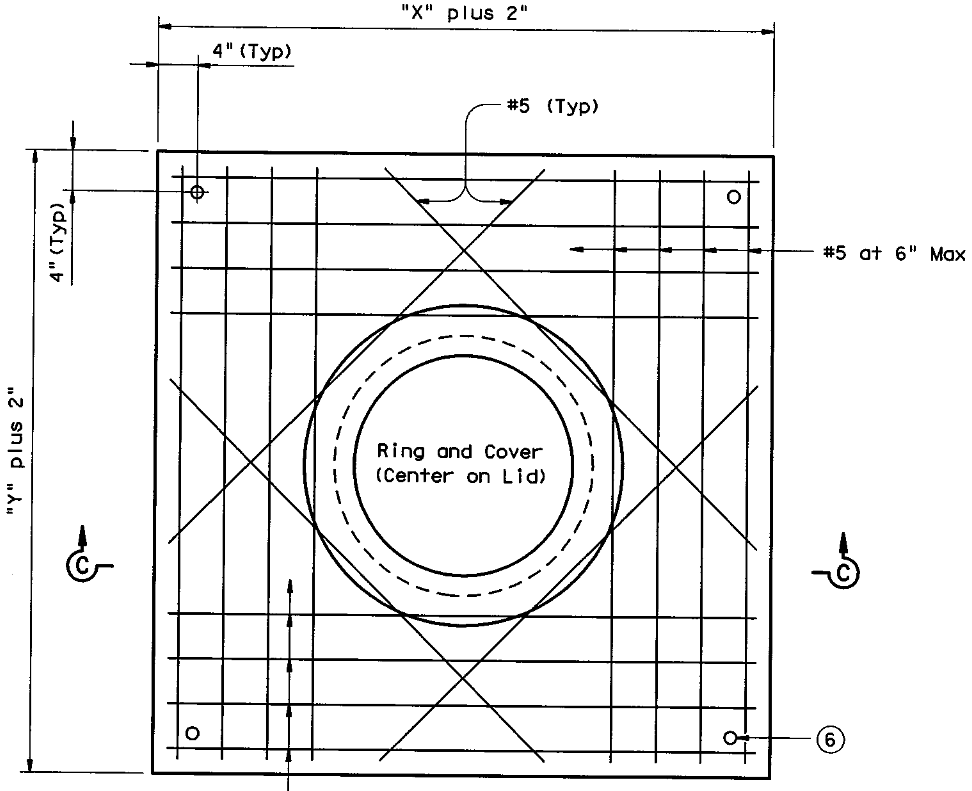

TYPICAL PRECAST LID PLAN

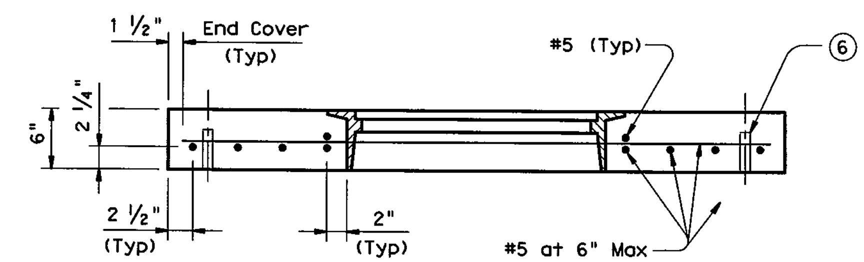

SECTION C-C

6 Form holes in lid for Dowels D using 1" Dia x 4" PVC Pipe (SCH 40) (Typ)

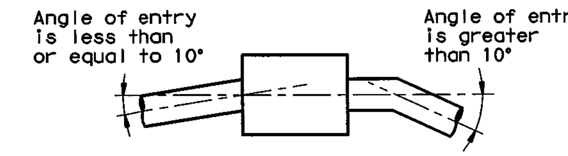

PIPE CONNECTION DETAIL

Connecting pipes should enter within 10° of normal to inlet wall. If necessary, pipe elbow or curved approach alignment should be used to stay within this limit.

GENERAL NOTES:

When approved, precast inlets with equivalent structural capacity may be furnished. Sealed engineering calculations and drawings shall be submitted for approval prior to construction.

Shop drawings will not be required.

Apron will be cast-in-place.

Lid will be precast.

In areas of conflict between reinforcing steel, blockouts, pipes, anchor bolts or other reinforcing steel, the reinforcement shall be bent or adjusted to clear as directed by the Engineer.

Structural Steel for grates shall conform to the requirements of ASTM Designation A-36 or AISI Designation M1010-M1020.

All reinforcing steel shall be Grade 60 unless otherwise noted.

All concrete shall be Class "A" (f'c = 3,000 psi).

All steel components except reinforcing, shall be galvanized after fabrication. Galvanizing damaged during transport or construction shall be repaired in accordance with the specifications.

Inlet is to used in ditches and medians away from the roadway.

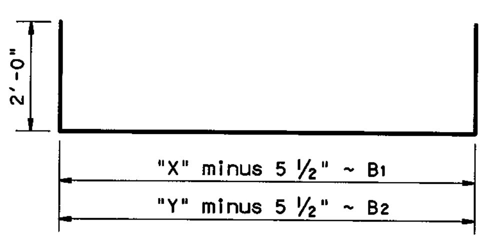

BARS B (#4)

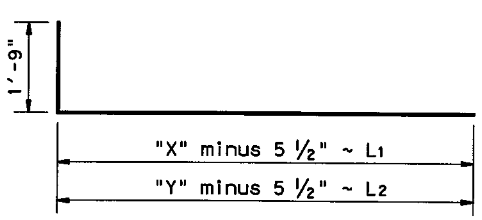

BARS L (#4)

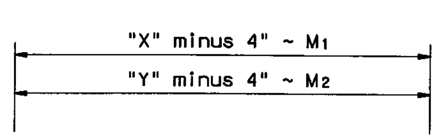

BARS M (#4)

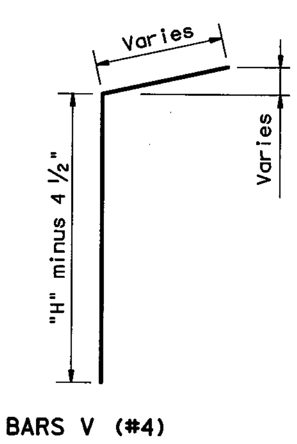

BARS V (#4)

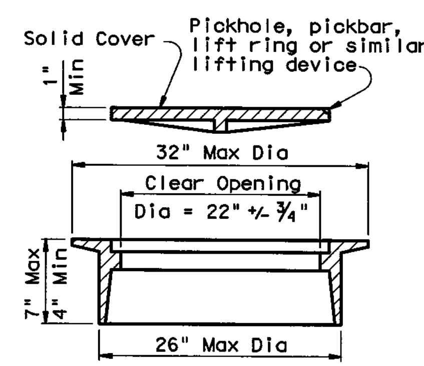

RING AND COVER DETAILS

Approximate Weight = 245 lb

SHEET 2 OF 2

Texas Department of Transportation
Bridge Division

HORIZONTAL INLET TYPE H WITH LID (MAX 48" DIA PIPES)

IL-H-L

FILE: ilhste02.dgn	DN: TxDOT	CK: TxDOT	DW: TxDOT		CK: TxDOT	
©TxDOT February 2010	DISTRICT	FEDERAL AID PROJECT				SHEET
REVISIONS	FTW	255, ETC.				1315
	COUNTY		CONTROL	SECT	JOB	HIGHWAY
	TARRANT		0014	16	255	IH 35W

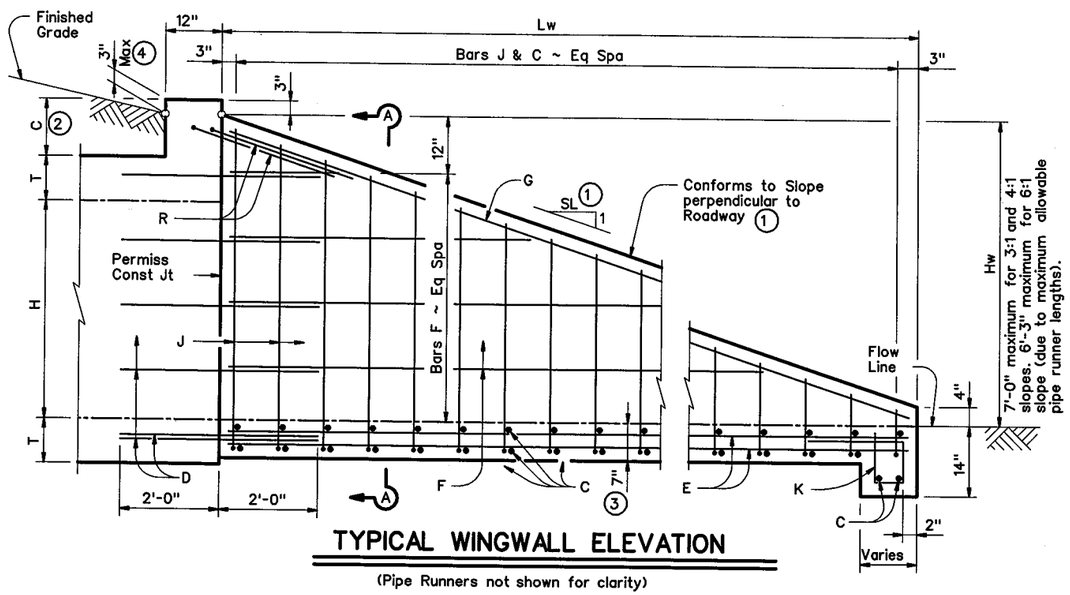

TYPICAL WINGWALL ELEVATION

(Pipe Runners not shown for clarity)

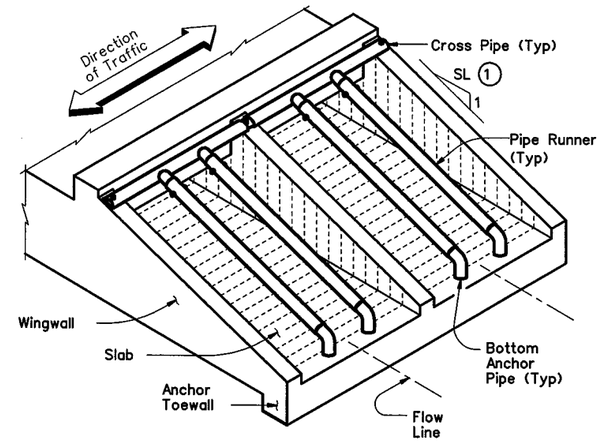

ISOMETRIC VIEW OF TYPICAL INSTALLATION

Formulas: (All values are in Feet)

Hw = H + T + C − 0.250'

Lw = (Hw − 0.333') (SL)

For Cast-in-place culverts:

Atw = (N) (S) (N+ 1) (+U)

For Precast culverts:

Atw = (N) (2U S) (N+ 1) (+0.500')

Total Wingwall Area (S.F.)
= (0.5) (Hw −0.333') (Lw) (N 1) +

Total Concrete Volume (C.Y.)
= [(Wingwall Area) (0.583') +
(Lw) (Atw) (0.583') +
(Atw) (1.167') (1.167' 0.583')]÷ (27) ÷

Pipe Runner Length
= (Lw) (K1) (1.917')

Total Reinforcing (Lbs)
= (1.55) (Lw) (Atw) +
(4.43) (Atw) +
(K2) (Hw) (N 1)+ (Lw) +

C = Height of Curb above top of Top Slab
Hw = Height of Wingwall
K = Constant Value for use in formulas

Slope SL:1	K1	K2
3:1 ~	1.054 ~	7.45
4:1 ~	1.031 ~	8.49
6:1 ~	1.014 ~	10.30

Atw = Anchor Toewall Length
Lw = Length of Wingwall
N = Number of Culvert Barrels
SL:1 = Side Slope Ratio (Horizontal : 1 Vertical)

See applicable box culvert standard for H, S, T, and U values.

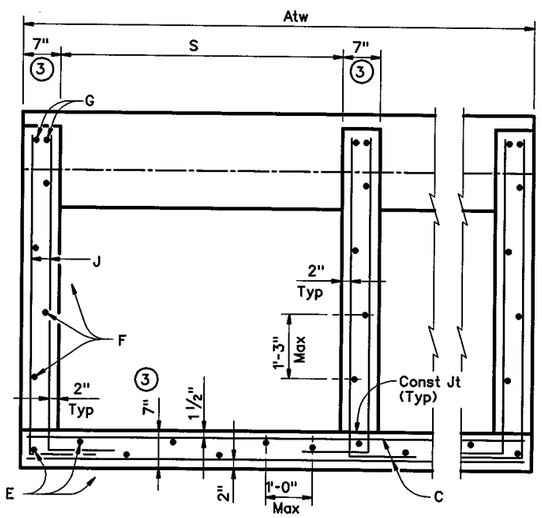

SECTION A-A

(Showing typical Wingwall and Wing Slab reinforcing)
(Pipe Runners not shown for clarity)

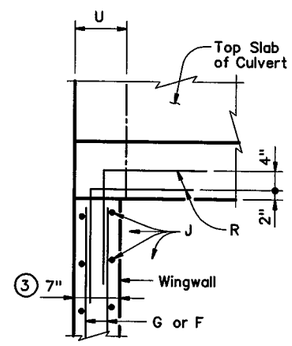

AT TOP OF EXTERIOR WINGWALL
(Cast-in-Place Culvert)

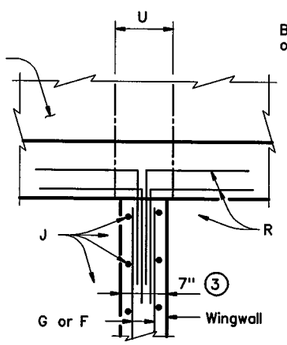

AT TOP OF INTERIOR WINGWALL
(Cast-in-Place Culvert)

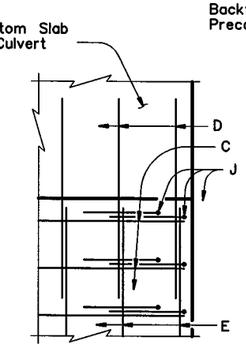

AT OUTSIDE OF BOTTOM SLAB
(Cast-in-Place Culvert)

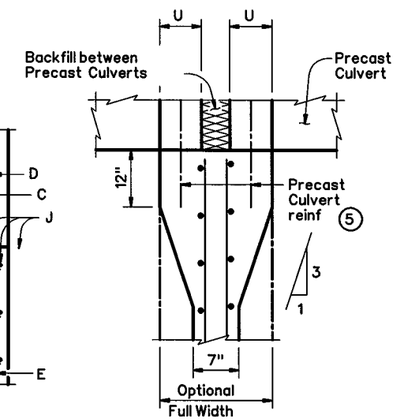

AT INTERIOR WINGWALL
(Precast Culvert)

PLAN VIEWS OF CORNER DETAILS

GENERAL NOTES:

Designed according to AASHTO LRFD Specifications.

The Safety End Treatments shown herein are intended for use in those installations where out of control vehicles are likely to traverse the openings approximately perpendicular to the Pipe Runners.

Pipe Runners are designed for a traversing load of 1,800 pounds at yield as recommended by Research Report 280-1, "Safety Treatment of Roadside Cross-Drainage Structures", Texas Transportation Institute, March 1981.

All reinforcing steel shall be Grade 60. All reinforcing shall be adjusted as necessary to provide a minimum clear cover of 1 1/4".

All concrete shall be Class "C" and shall have a minimum compressive strength of 3600 psi.

The quantities for Pipe Runners, reinforcing steel, and concrete, resulting from the formulas given herein are for Contractor's information only.

Pipe Runners, Cross Pipes, and Anchor Pipes shall conform to the requirements of ASTM A53 (Type E or S, Grade B), ASTM A500 (Grade B), or API 5LX52.

Bolts and nuts shall conform to ASTM A307.

All steel components, except the concrete reinforcing, shall be galvanized after fabrication. Galvanizing damaged during transport or construction shall be repaired in accordance with the specifications.

See BCS standard sheet for additional dimensions and information.

Alternate design drawings bearing the seal of a professional engineer will be acceptable for precast construction of the Safety End Treatments.

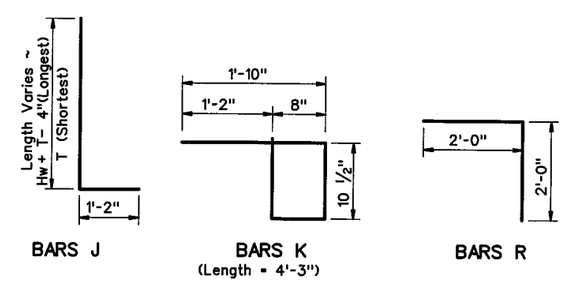

BARS J

BARS K
(Length = 4'-3")

BARS R

TABLE OF REINFORCING BAR SIZES & SPACING

Bar	Size	Spacing
C	#4	10" Max
D	#4	match F & E
E	#4	1'- 0" Max
F	#4	1'- 3" Max
G	#6	Shown
J	#4	10" Max
K	#4	1'- 0" Max
R	#4	Shown

1. Recommended values of slope are: 3:1, 4:1, & 6:1. Slope shall be 3:1 or flatter.
2. 0" min to 5'-0" max. Estimated curb heights are shown elsewhere in the plans. For structures without railing and curbs taller than 1'-0", refer to ECD standard.
3. Wingwall and slab thicknesses may be the same as the adjacent culvert wall and slab thicknesses (7" Minimum). If thicknesses greater than the minimum (7") are used, no changes will be made in quantities and no additional compensation will be allowed.
4. For vehicle safety, curbs shall project no more than 3" above finished grade. Curb heights shall be reduced, if necessary, to meet these requirements. No changes will be made in quantities and no additional compensation will be allowed for this work.
5. For Culverts with C = 0", the precast culvert reinforcing may extend 1'-0" minimum into Wingwall. Wingwall Bars D and R may be omitted. Otherwise, refer to the "Wingwall Connection Detail" on the SCP-MD standard.

DISCLAIMER:
The use of this standard is governed by the "Texas Engineering Practice Act". No warranty of any kind is made by TxDOT for any purpose whatsoever. TxDOT assumes no responsibility for the conversion of this standard to other formats or for incorrect results or damages resulting from its use.

LEVELS DISPLAYED: 1 2 3 4 5 6 7 8 9 10 11 12 13 14 15 16 / 17 18 19 20 21 22 23 24 25 26 27 28 29 30 31 32 / 33 34 35 36 37 38 39 40 41 42 43 44 45 46 47 48 / 49 50 51 52 53 54 55 56 57 58 59 60 61 62 63

ACC:

SHEET 1 OF 2

Texas Department of Transportation
Bridge Division

SAFETY END TREATMENT
FOR 0° SKEW BOX CULVERTS
(MAXIMUM Hw = 7'-0")
TYPE I ~ CROSS DRAINAGE

SETB-CD

FILE: setbcdse.dgn	DN: GAF	CK: CAT	DW: JRP	CK: GAF
©TxDOT February 2010	DISTRICT	FEDERAL AID PROJECT		SHEET
REVISIONS	FTW	255, ETC.		1315A

COUNTY	CONTROL	SECT	JOB	HIGHWAY
TARRANT	0014	16	255	H 35W

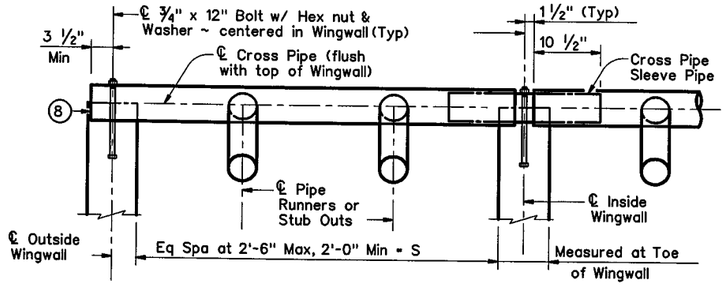

NOTE: At Contractor's option, the Cross Pipe may be made continuous across the Inside Wingwalls. If such option is selected, the Sleeve Pipe shall be omitted and a " diameter through hole be made in the Cross Pipe to accept the anchor bolt at the centerline of each Inside Wingwall.

CROSS PIPE INSTALLATION DETAILS

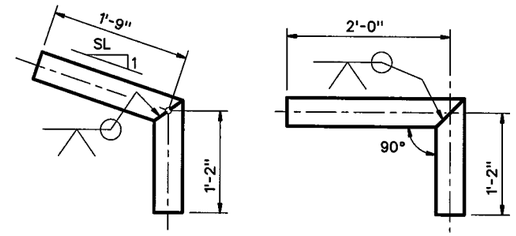

OPTION A OPTION B

BOTTOM ANCHOR PIPE DETAILS (10)

(6) Cross Pipe shall be the same size as the Pipe Runner. Cross Pipe Stub Out shall be the same size as the Anchor Pipe.

(7) Note that actual slope of Safety Pipe Runner may vary slightly from Side Slope.

(8) Care shall be taken to ensure that Riprap concrete does not flow into the Cross Pipe so as to permit disassembly of the bolted connection to allow cleanout access.

(9) After installation, the ½" hole shall be inspected to ensure that the lap of the Safety Pipe Runner with the Bottom Anchor Pipe is adequate.

(10) At fabricator's option, a heat bend to a smooth 5" radius or a manufactured elbow (of the same material as the Runner) may be substituted for the mitered and welded joint in the Bottom Anchor Pipe.

MAXIMUM PIPE RUNNER LENGTHS & REQUIRED PIPE RUNNER AND ANCHOR PIPE SIZES (6)

Maximum Pipe Runner Length	Required Pipe Runner Size			Required Anchor Pipe Size		
	Pipe Size	Pipe O.D.	Pipe I.D.	Pipe Size	Pipe O.D.	Pipe I.D.
10'- 0"	3" STD	3.500"	3.068"	2" STD	2.375"	2.067"
19'- 8"	4" STD	4.500"	4.026"	3" STD	3.500"	3.068"
34'- 2"	5" STD	5.563"	5.047"	4" STD	4.500"	4.026"

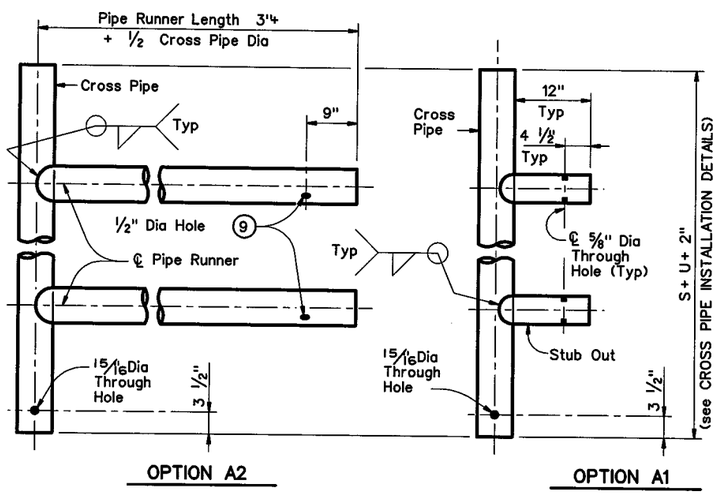

OPTION A2 OPTION A1

FOR USE IN OUTSIDE CULVERT BAY

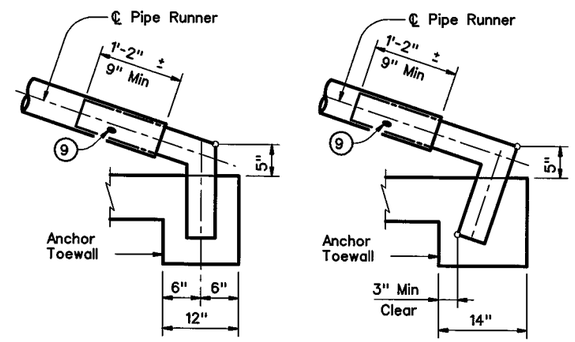

OPTION B1 OPTION B2

BOTTOM ANCHOR TOEWALL DETAILS

(Wingwall not shown for clarity)

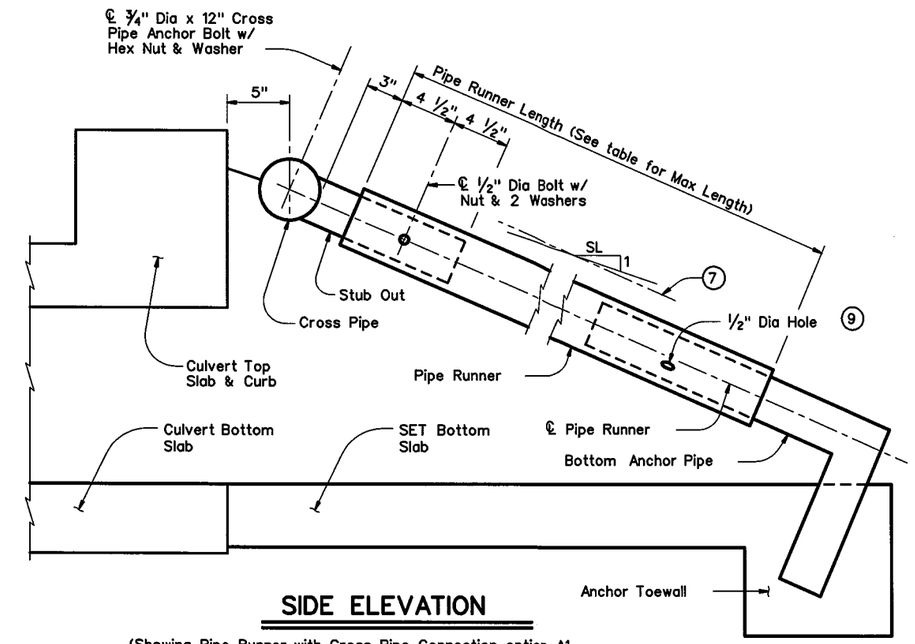

SIDE ELEVATION

(Showing Pipe Runner with Cross Pipe Connection option A1 and anchor Pipe option B2. Wingwall not shown for clarity)

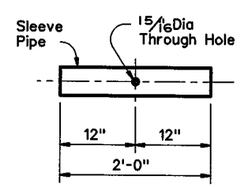

CROSS PIPE SLEEVE PIPE DETAILS

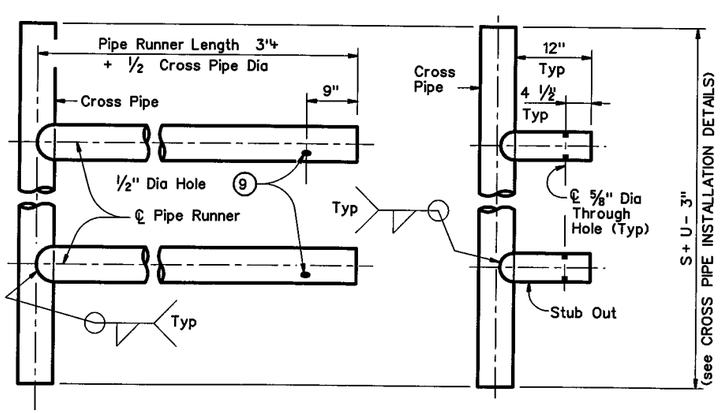

OPTION A2 OPTION A1

FOR USE IN INSIDE CULVERT BAY

CROSS PIPE AND CONNECTIONS DETAILS

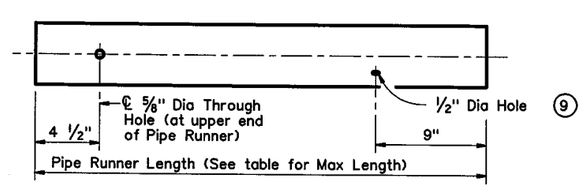

NOTE: The separate Pipe Runner shown is required when Cross Pipe Connection Option A1 is used.

PIPE RUNNER DETAILS

DISCLAIMER:
The use of this standard is governed by the "Texas Engineering Practice Act". No warranty of any kind is made by TxDOT, for any purpose whatsoever. TxDOT assumes no responsibility for the conversion of this standard to other formats or for incorrect results or damages resulting from its use.

LEVELS DISPLAYED
1 2 3 4 5 6 7 8 9 10 11 12 13 14 15 16
17 18 19 20 21 22 23 24 25 26 27 28 29 30 31 32
33 34 35 36 37 38 39 40 41 42 43 44 45 46 47 48
49 50 51 52 53 54 55 56 57 58 59 60 61 62 63

ACC:

SHEET 2 OF 2

Texas Department of Transportation
Bridge Division

SAFETY END TREATMENT
FOR 0° SKEW BOX CULVERTS (MAXIMUM Hw = 7'-0") TYPE I ~ CROSS DRAINAGE

SETB-CD

FILE: setbcdse.dgn	DN: GAF	CK: CAT	DW: JRP	CK: GAF
©TxDOT February 2010	DISTRICT	FEDERAL AID PROJECT		SHEET
REVISIONS	FTW	255, ETC.		315B

COUNTY	CONTROL	SECT	JOB	HIGHWAY
TARRANT	0014	16	255	IH 35W

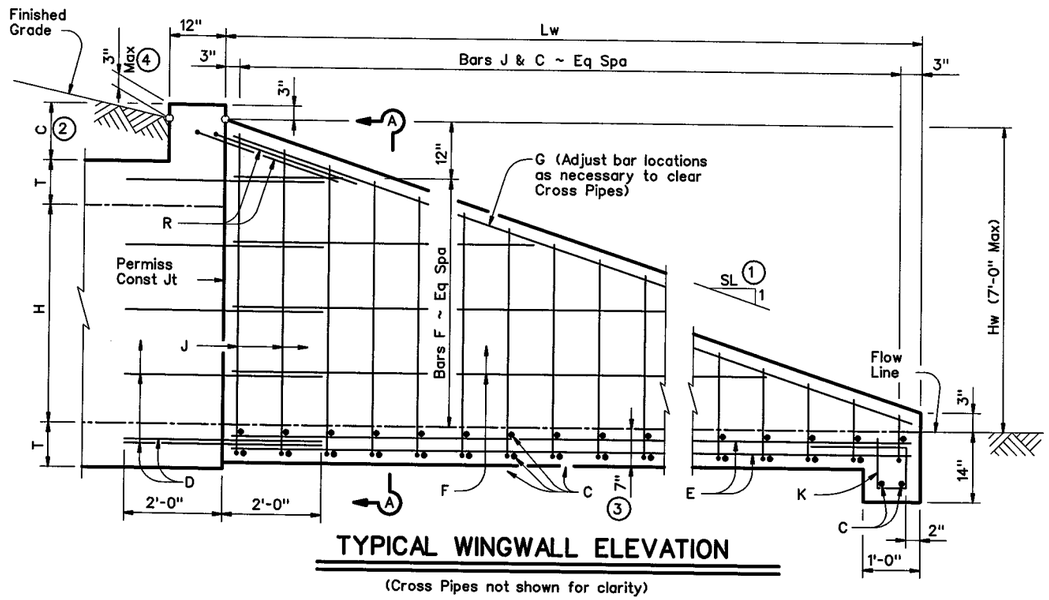

TYPICAL WINGWALL ELEVATION

(Cross Pipes not shown for clarity)

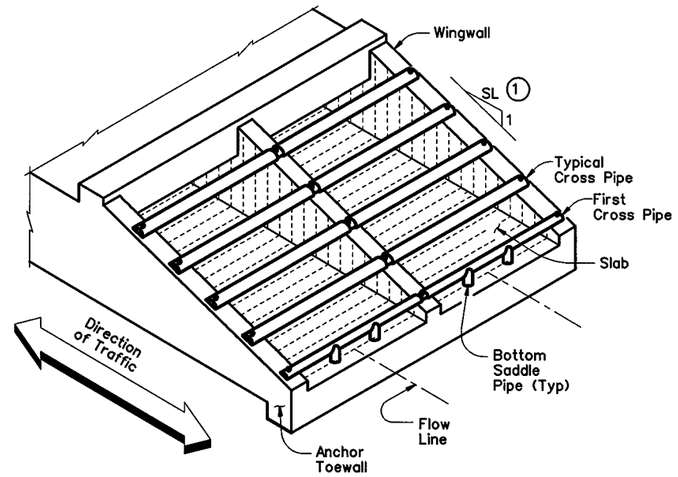

ISOMETRIC VIEW OF TYPICAL INSTALLATION

(Showing Bolted Anchor Option)

Formulas: (All values are in Feet)

Hw = H + T + C − 0.250'

Lw = (Hw − 0.250') (SL)

For Cast-in-place culverts:

Atw = (N) (S) (N+ 1) (+U)

For Precast culverts:

Atw = (N) (2U 3) (N+ 1) (+0.500')

Total Wingwall Area (S.F.)

= (0.5) (Hw −0.250') (Lw) (N 1) +

Total Concrete Volume (C.Y.)

= [(Wingwall Area) (0.583') +
(Lw) (Atw) (0.583') +
(Atw) (1.000') (1.167' 0.583')] (27) ÷

Total Reinforcing (Lbs)

= (1.55) (Lw) (Atw) +
(4.43) (Atw) +
(K) (Hw) (N 1)+(Lw) √

C = Height of Curb above top of Top Slab
Hw = Height of Wingwall
K = Constant Value for use in formulas
Slope SL:1 K
6:1 ~ 10.41
Atw = Anchor Toewall Length
Lw = Length of Wingwall
N = Number of Culvert Barrels
S = Clear Span of each Barrel
SL:1 = Side Slope Ratio (Horizontal : 1 Vertical)

See applicable box culvert standard for H, S, T, and U values.

GENERAL NOTES:

Designed according to AASHTO LRFD Specifications.

The Safety End Treatments shown herein are intended for use in those installations where out of control vehicles are likely to traverse the openings approximately perpendicular to the Cross Pipes.

Cross Pipes are designed for a traversing load of 10,000 pounds at yield as recommended by Research Report 280-2F, "Safety Treatment of Roadside Parallel-Drainage Structures", Texas Transportation Institute, March 1981.

All concrete shall be Class "C" and shall have a minimum compressive strength of 3600 psi.

All reinforcing steel shall be Grade 60. All reinforcing shall be adjusted as necessary to provide a minimum clear cover of 1 1/4".

The quantities for concrete, reinforcing steel, and Cross Pipes resulting from the formulas given herein are for Contractor's information only.

Cross Pipes, Sleeve Pipes, and Saddle Pipes shall conform to the requirements of ASTM A53 (Type E or S, Grade B), ASTM A500 (Grade B), or API 5LX52.

Bolts and nuts shall conform to ASTM A307.

All steel components, except the concrete reinforcing, shall be galvanized after fabrication. Galvanizing damaged during transport or construction shall be repaired in accordance with the specifications.

See BCS standard sheet for additional dimensions and information.

Alternate design drawings bearing the seal of a professional engineer will be acceptable for precast construction of the Safety End Treatments.

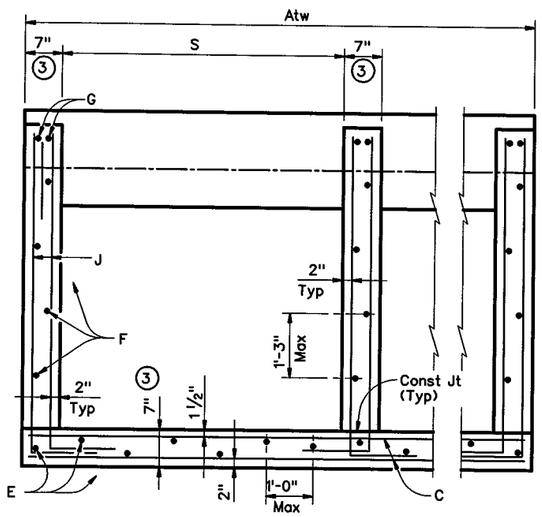

SECTION A-A

(Showing typical Wingwall and Wing Slab reinforcing)
(Pipe Runners not shown for clarity)

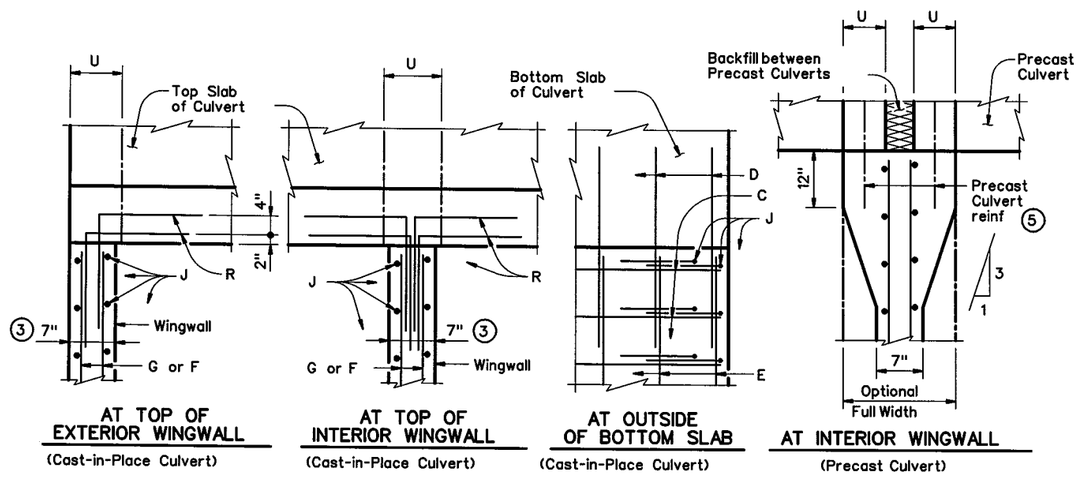

AT TOP OF EXTERIOR WINGWALL (Cast-in-Place Culvert)

AT TOP OF INTERIOR WINGWALL (Cast-in-Place Culvert)

AT OUTSIDE OF BOTTOM SLAB (Cast-in-Place Culvert)

AT INTERIOR WINGWALL (Precast Culvert)

PLAN VIEWS OF CORNER DETAILS

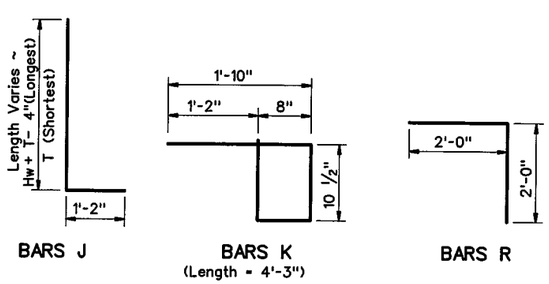

BARS J

BARS K (Length = 4'-3")

BARS R

TABLE OF REINFORCING BAR SIZES & SPACING

Bar	Size	Spacing
C	#4	10" Max
D	#4	match F & E
E	#4	1'- 0" Max
F	#4	1'- 3" Max
G	#6	Shown
J	#4	10" Max
K	#4	1'- 0" Max
R	#4	Shown

(1) Slope will be 6:1 or flatter.

(2) 0" min to 5'-0" max. Estimated curb heights are shown elsewhere in the plans. For structures without railing and curbs taller than 1'-0", refer to ECD standard.

(3) Wingwall and slab thicknesses may be the same as the adjacent culvert wall and slab thicknesses (7" Minimum). If thicknesses greater than the minimum (7") are used, no changes will be made in quantities and no additional compensation will be allowed.

(4) For vehicle safety, curbs shall project no more than 3" above finished grade. Curb heights shall be reduced, if necessary, to meet these requirements. No changes will be made in quantities and no additional compensation will be allowed for this work.

(5) For Culverts with C = 0", the precast culvert reinforcing may extend 1'-0" minimum into Wingwall. Wingwall Bars D and R may be omitted. Otherwise, refer to the "Wingwall Connection Detail" on the SCP-MD standard.

DISCLAIMER:
The use of this standard is governed by the "Texas Engineering Practice Act". No warranty of any kind is made by TxDOT for any purpose whatsoever. TxDOT assumes no responsibility for the conversion of this standard to other formats or for incorrect results or damages resulting from its use.

LEVELS DISPLAYED — ACC:

SHEET 1 OF 2

Texas Department of Transportation
Bridge Division

SAFETY END TREATMENT
FOR BOX CULVERTS (MAXIMUM Hw = 7'-0") TYPE I ~ PARALLEL DRAINAGE

SETB-PD

FILE: setbpdse.dgn	DN: GAF	CK: CAT	DW: JRP	CK: GAF
©TxDOT February 2010	DISTRICT	FEDERAL AID PROJECT		SHEET
REVISIONS	FTW	255, ETC.		1315C

COUNTY	CONTROL	SECT	JOB	HIGHWAY
FTW	0014	16	255	H 35W

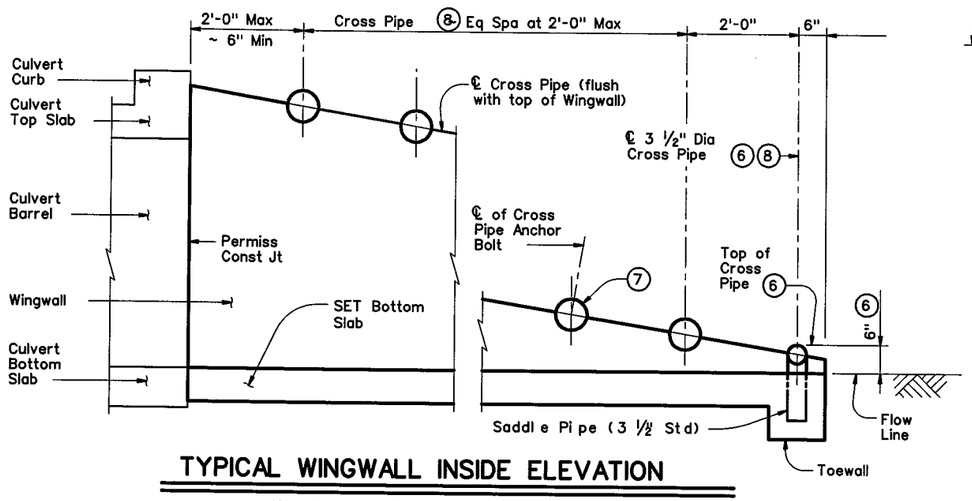

TYPICAL WINGWALL INSIDE ELEVATION

(Showing installation of Cross Pipes)

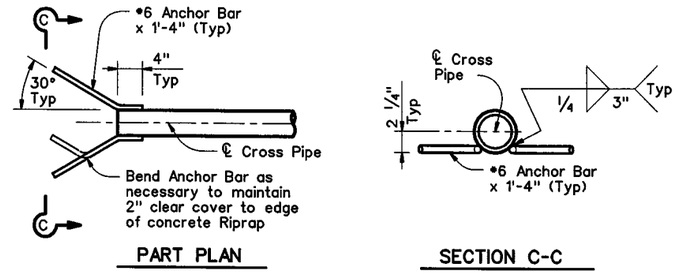

PART PLAN

SECTION C-C

OPTIONAL ANCHOR BAR DETAILS

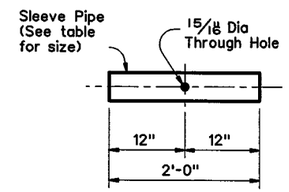

SLEEVE PIPE DETAILS (9)

REQUIRED PIPE SIZES (8)		
Culvert Span Sizes	Cross Pipe Size	Sleeve Pipe Size (9)
First Pipe	3 ½" STD	2 ½" STD
30" to 42"	4" STD	3" STD
48" to 72"	5" STD	4" STD
78" to 120"	6" STD	5" STD

STANDARD PIPE SIZES		
Pipe Size	Pipe O.D.	Pipe I.D.
2 ½" STD	2.875"	2.469"
3" STD	3.500"	3.068"
3 ½" STD	4.000"	3.548"
4" STD	4.500"	4.026"
5" STD	5.563"	5.047"
6" STD	6.625"	6.065"

(6) The proper installation of the first Cross Pipe is critical for vehicle safety. The top of the first Cross Pipe must be placed at no more than 6" above the flow line.

(7) The third Cross Pipe from the bottom of the Culvert shall always be installed using a bolted connection. Care shall be taken to ensure that concrete does not flow into this Cross Pipe so as to permit disassembly of the bolted connection to allow cleanout access.

(8) Cross Pipes and Sleeve Pipes (if required) shall be as shown in the REQUIRED PIPE SIZES table. Saddle Pipes for the 3 ½" first Cross Pipe shall also be 3 ½".

(9) At Contractor's option, the Cross Pipe may be continuous across the Inside Wingwalls. If such option is selected, the Sleeve Pipe shall be omitted and a " diameter 15/16 through hole made in the Cross Pipe to accept the anchor bolt at the centerline of each Interior Wingwall.

(10) Riprap will be required when using the optional Anchor Bar details and shall be included in the Price Bid for Safety End Treatment. Such Riprap shall be concrete Riprap in accordance with Item 432, "Riprap".

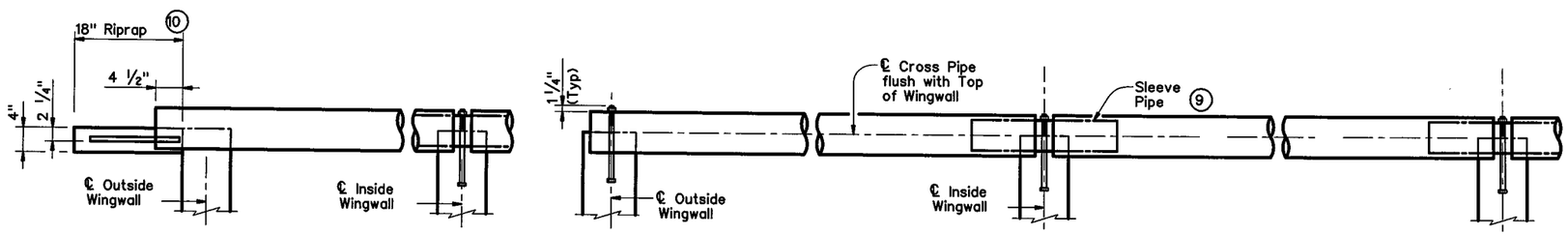

SECTION THROUGH INSTALLATION OF TYPICAL FULL CROSS PIPE

(Anchor details and dimensions are similar to those shown below in SECTION THROUGH INSTALLATION OF 3 ½" FIRST CROSS PIPE detail.)

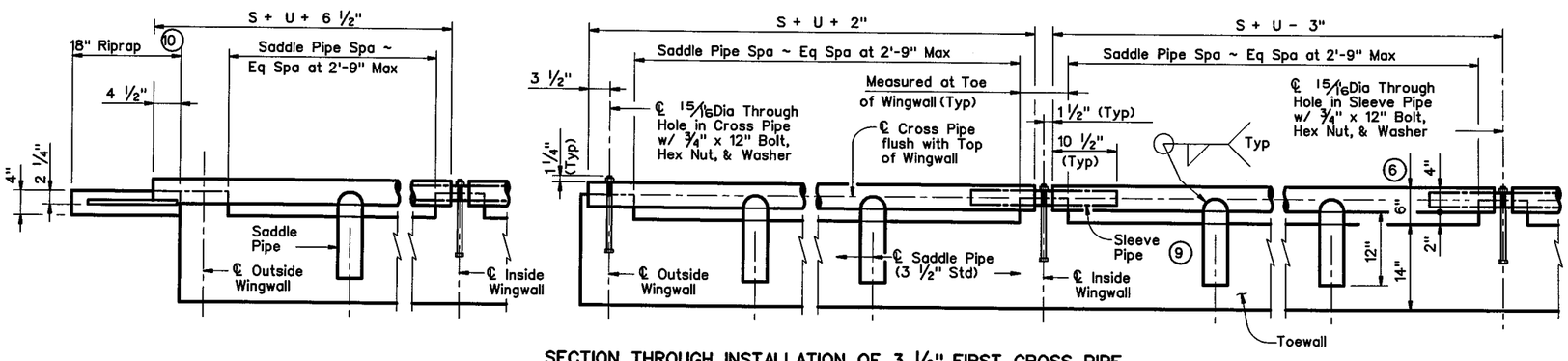

OUTSIDE CULVERT BARREL WITH OPTIONAL ANCHOR BARS & RIPRAP

SECTION THROUGH INSTALLATION OF 3 ½" FIRST CROSS PIPE

OUTSIDE CULVERT BARREL WITH BOLTED ANCHOR

INSIDE CULVERT BARREL

CROSS PIPE INSTALLATION DETAILS

DISCLAIMER:
The use of this standard is governed by the "Texas Engineering Practice Act". No warranty of any kind is made by TxDOT for any purpose whatsoever. TxDOT assumes no responsibility for the conversion of this standard to other formats or for incorrect results or damages resulting from its use.

LEVELS DISPLAYED

1	2	3	4	5	6	7	8	9	10	11	12	13	14	15	16	ACC:
17	18	19	20	21	22	23	24	25	26	27	28	29	30	31	32	
33	34	35	36	37	38	39	40	41	42	43	44	45	46	47	48	
49	50	51	52	53	54	55	56	57	58	59	60	61	62	63		

SHEET 2 OF 2

Texas Department of Transportation
Bridge Division

SAFETY END TREATMENT
FOR BOX CULVERTS (MAXIMUM Hw = 7'-0") TYPE I~ PARALLEL DRAINAGE

SETB-PD

FILE: setbpdse.dgn	DN: GAF	CK: CAT	DW: JRP	CK: GAF
©TxDOT February 2010	DISTRICT	FEDERAL AID PROJECT		SHEET
REVISIONS	FTW	255, ETC.		1315D
	COUNTY	CONTROL	SECT	JOB	HIGHWAY
	FTW	0014	16	255	H 35W

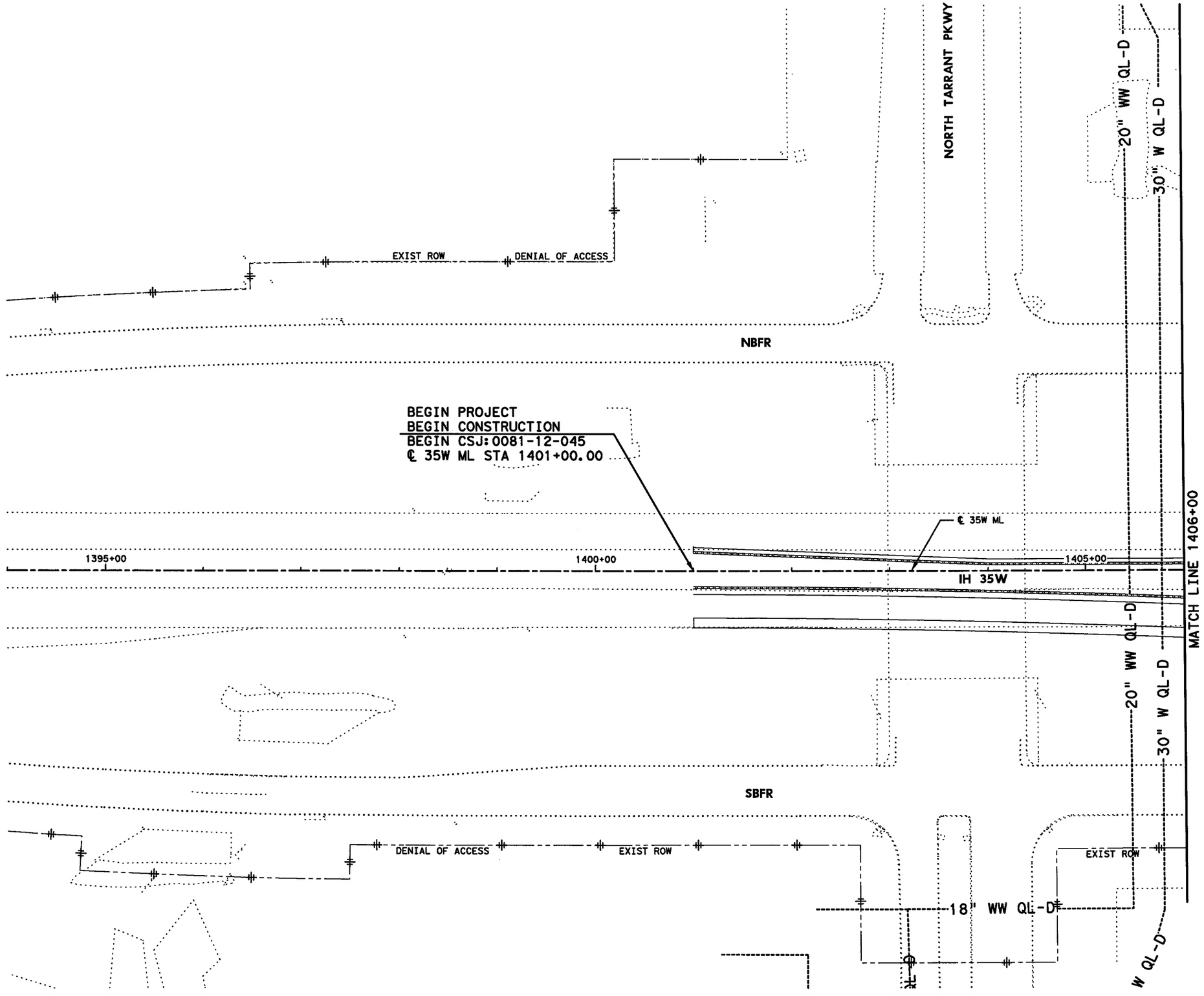

0' 50' 100'

SCALE IN FEET

LEGEND:

- CATVuG — CABLE TV
- EuG — ELECTRIC
- FO — FIBER OPTIC
- G — GAS
- OE — OVERHEAD UTILITIES
- STM — STORM
- TuG — TELEPHONE
- TC — TRAFFIC CONTROL
- Unk — UNKNOWN
- W — WATER
- WW — WASTEWATER

NOTES:

1. UTILITIES SHOWN ARE APPROXIMATE AND ARE INTENDED FOR GENERAL INFORMATION ONLY. IT IS THE CONTRACTOR'S RESPONSIBILITY TO CONTACT ALL UTILITY OWNERS FOR ACTUAL LOCATIONS.
2. REFER TO SUBSURFACE UTILITY ENGINEERING (SUE) DOCUMENTS SIGNED AND SEALED BY OTHERS UNDER SEPERATE CONTRACT FOR ADDITIONAL INFORMATION.
   SUE PROVIDED BY:
   AIA ENGINEERS, LTD
   15310 PARK ROW
   HOUSTON, TX 77084
   TEL 281-493-4140
   FAX 281-493-2211
3. SUE DOCUMENTS ONLY INCLUDE STORM SEWER LOCATIONS TO THE EXTENTS SHOWN.

KENNEDY CONSULTING
TBPE REGISTRATION NO. F-926

Texas Department of Transportation
© 2012

IH 35W FROM NORTH TARRANT PKWY TO IH 820

EXISTING UTILITY
BEGIN PROJECT TO STA 1406+00

SCALE 1" = 100'

SHEET 1 OF 23

DESIGN	FED.RD. DIV.NO.	FEDERAL AID PROJECT NO.		HIGHWAY NO.
KCI	6	(SEE TITLE SHEET)		IH 35W
GRAPHICS	STATE	DISTRICT	COUNTY	SHEET NO.
KCI	TEXAS	FTW	TARRANT	1316
CHECK	CONTROL	SECTION	JOB	
KCI	0014	16	255, ETC.	

FILENAME: S3B*EX-UTIL01*GTN.dgn

DRAWING DATE: 7/13/2012

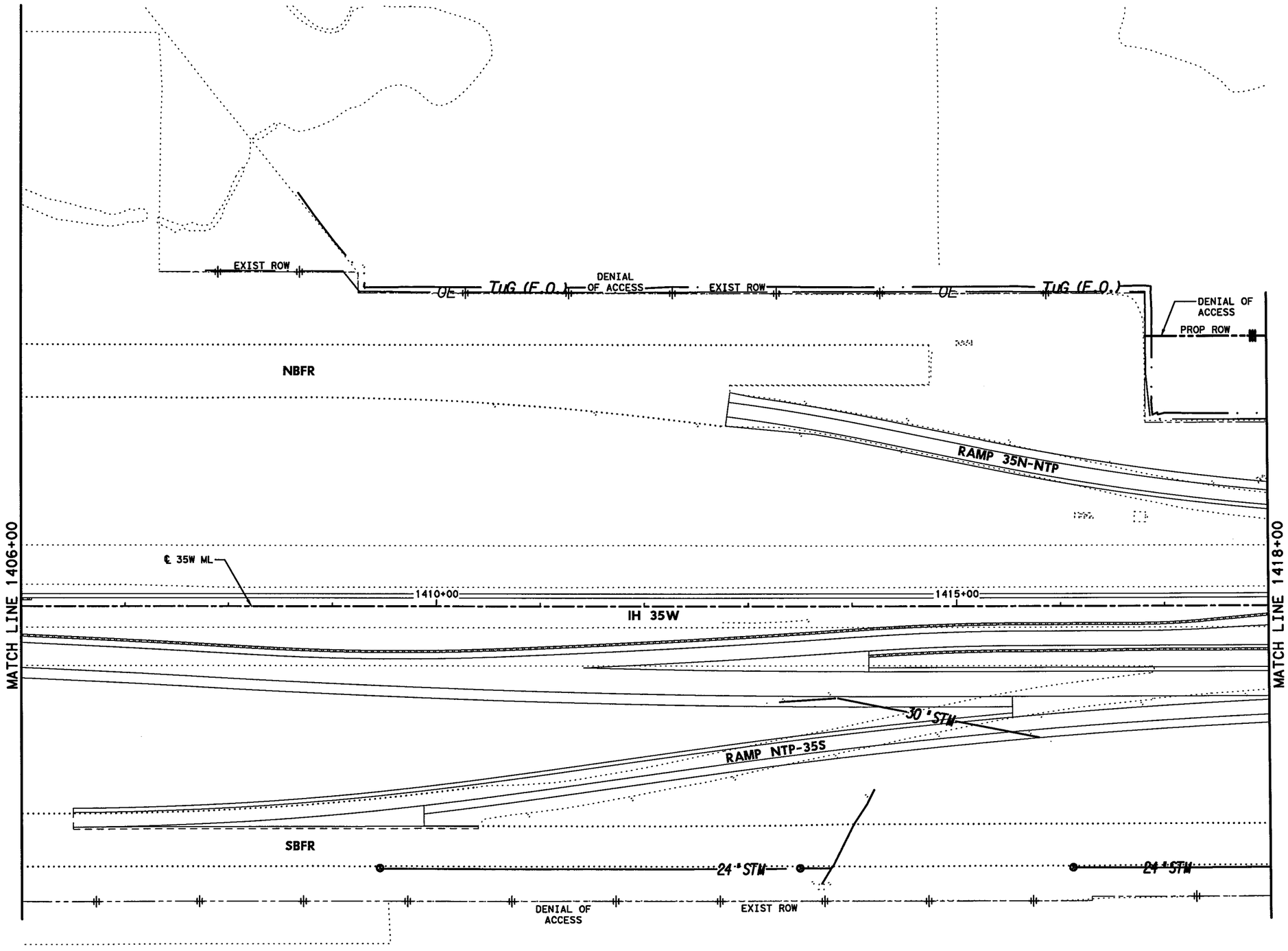

0' 50' 100'

SCALE IN FEET

LEGEND:

CATVuG	CABLE TV
EuG	ELECTRIC
FO	FIBER OPTIC
G	GAS
OE	OVERHEAD UTILITIES
STM	STORM
TuG	TELEPHONE
TC	TRAFFIC CONTROL
Unk	UNKNOWN
W	WATER
WW	WASTEWATER

NOTES:

1. UTILITIES SHOWN ARE APPROXIMATE AND ARE INTENDED FOR GENERAL INFORMATION ONLY. IT IS THE CONTRACTOR'S RESPONSIBILITY TO CONTACT ALL UTILITY OWNERS FOR ACTUAL LOCATIONS.
2. REFER TO SUBSURFACE UTILITY ENGINEERING (SUE) DOCUMENTS SIGNED AND SEALED BY OTHERS UNDER SEPERATE CONTRACT FOR ADDITIONAL INFORMATION.
   SUE PROVIDED BY:
   AIA ENGINEERS, LTD
   15310 PARK ROW
   HOUSTON, TX 77084
   TEL 281-493-4140
   FAX 281-493-2211
3. SUE DOCUMENTS ONLY INCLUDE STORM SEWER LOCATIONS TO THE EXTENTS SHOWN.

KENNEDY CONSULTING
TBPE REGISTRATION NO. F-926

Texas Department of Transportation
© 2012

IH 35W FROM NORTH TARRANT PKWY TO IH 820

EXISTING UTILITY
STA 1406+00 TO STA 1418+00

SCALE 1" = 100'

SHEET 2 OF 23

DESIGN	FED.RD. DIV.NO.	FEDERAL AID PROJECT NO.		HIGHWAY NO.
KCI	6	(SEE TITLE SHEET)		IH 35W
GRAPHICS	STATE	DISTRICT	COUNTY	SHEET NO.
KCI	TEXAS	FTW	TARRANT	1317
CHECK	CONTROL	SECTION	JOB	
KCI	0014	16	255, ETC.	

DRAWING DATE: 7/13/2012

FILENAME: S3B*EX-UTIL02*GTN.dgn

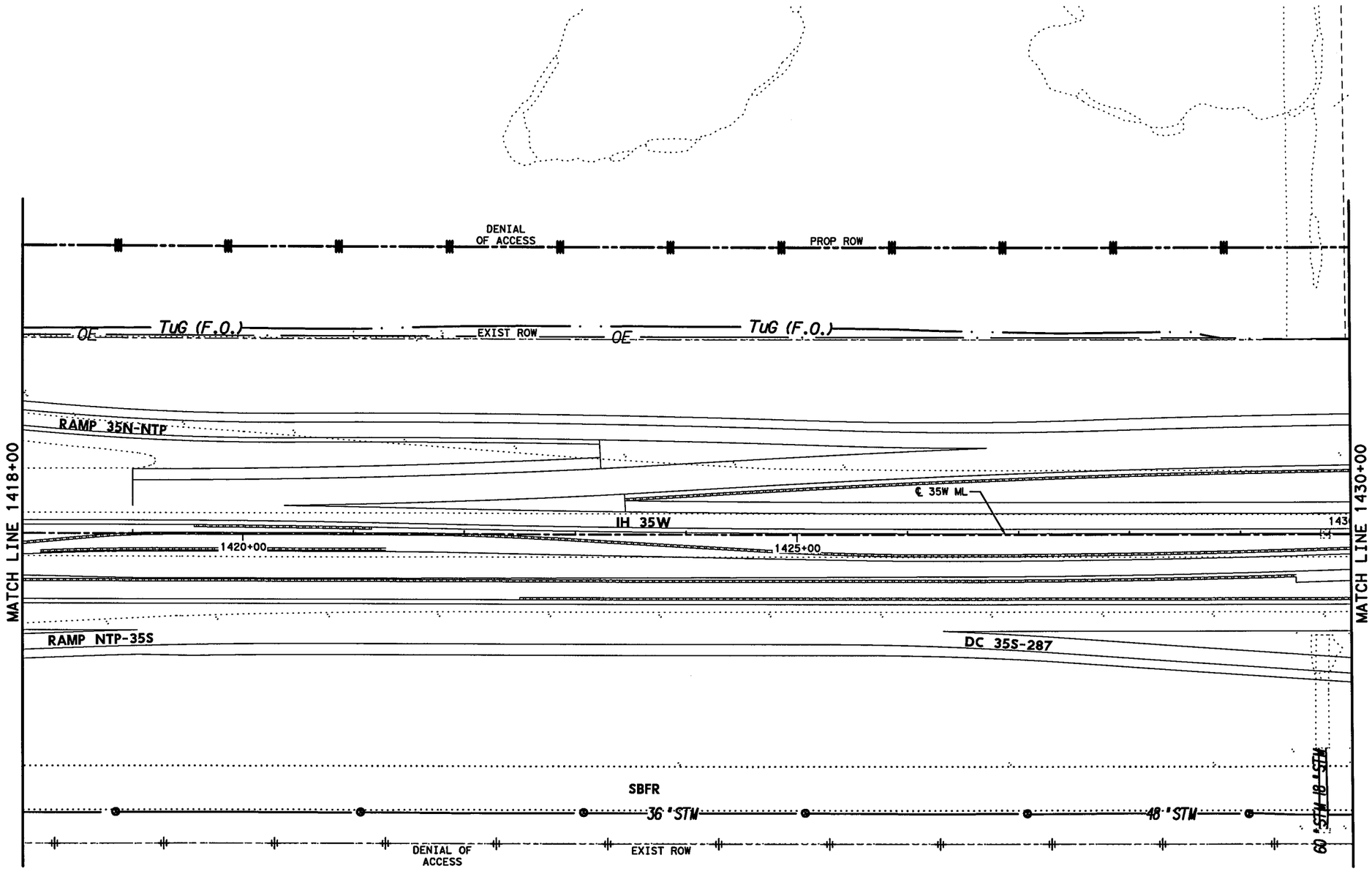

0' 50' 100'

SCALE IN FEET

LEGEND:

- CATVuG — CABLE TV
- EuG — ELECTRIC
- FO — FIBER OPTIC
- G — GAS
- OE — OVERHEAD UTILITIES
- STM — STORM
- TuG — TELEPHONE
- TC — TRAFFIC CONTROL
- Unk — UNKNOWN
- W — WATER
- WW — WASTEWATER

NOTES:

1. UTILITIES SHOWN ARE APPROXIMATE AND ARE INTENDED FOR GENERAL INFORMATION ONLY. IT IS THE CONTRACTOR'S RESPONSIBILITY TO CONTACT ALL UTILITY OWNERS FOR ACTUAL LOCATIONS.
2. REFER TO SUBSURFACE UTILITY ENGINEERING (SUE) DOCUMENTS SIGNED AND SEALED BY OTHERS UNDER SEPERATE CONTRACT FOR ADDITIONAL INFORMATION.
   SUE PROVIDED BY:
   AIA ENGINEERS, LTD
   15310 PARK ROW
   HOUSTON, TX 77084
   TEL 281-493-4140
   FAX 281-493-2211
3. SUE DOCUMENTS ONLY INCLUDE STORM SEWER LOCATIONS TO THE EXTENTS SHOWN.

KENNEDY CONSULTING
TBPE REGISTRATION NO. F-926

Texas Department of Transportation
© 2012

IH 35W FROM NORTH TARRANT PKWY TO IH 820

EXISTING UTILITY
STA 1418+00 TO STA 1430+00

SCALE 1" = 100' SHEET 3 OF 23

DESIGN	FED.RD. DIV.NO.	FEDERAL AID PROJECT NO.		HIGHWAY NO.
KCI	6	(SEE TITLE SHEET)		IH 35W
GRAPHICS	STATE	DISTRICT	COUNTY	SHEET NO.
KCI	TEXAS	FTW	TARRANT	1318
CHECK	CONTROL	SECTION	JOB	
KCI	0014	16	255, ETC.	

CHECK KCI

FILENAME: S3B*EX-UTIL03*GTN.dgn

DRAWING DATE: 7/13/2012

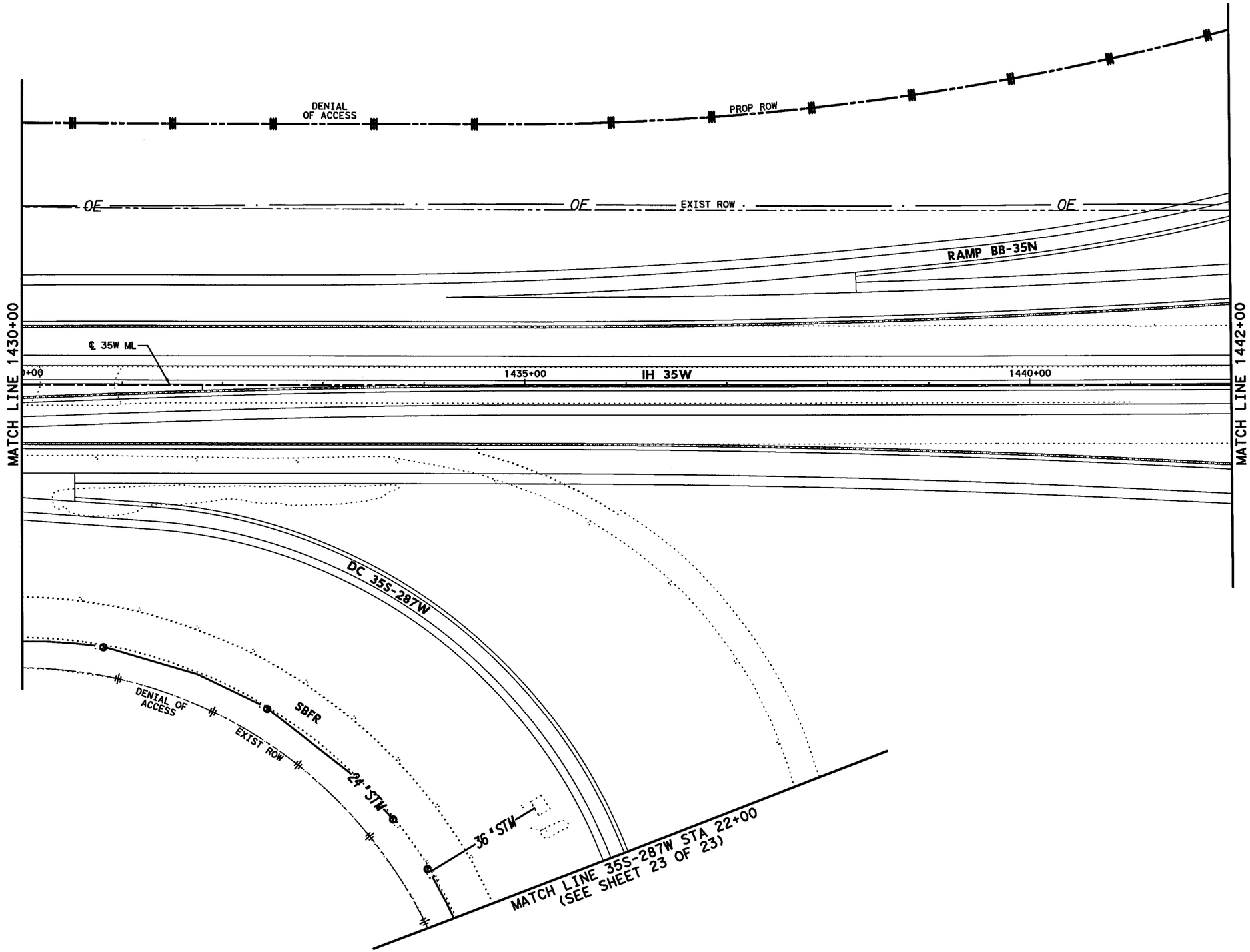

0' 50' 100'

SCALE IN FEET

LEGEND:

CATVuG	CABLE TV
EuG	ELECTRIC
FO	FIBER OPTIC
G	GAS
OE	OVERHEAD UTILITIES
STM	STORM
TuG	TELEPHONE
TC	TRAFFIC CONTROL
Unk	UNKNOWN
W	WATER
WW	WASTEWATER

NOTES:

1. UTILITIES SHOWN ARE APPROXIMATE AND ARE INTENDED FOR GENERAL INFORMATION ONLY. IT IS THE CONTRACTOR'S RESPONSIBILITY TO CONTACT ALL UTILITY OWNERS FOR ACTUAL LOCATIONS.
2. REFER TO SUBSURFACE UTILITY ENGINEERING (SUE) DOCUMENTS SIGNED AND SEALED BY OTHERS UNDER SEPERATE CONTRACT FOR ADDITIONAL INFORMATION.
   SUE PROVIDED BY:
   AIA ENGINEERS, LTD
   15310 PARK ROW
   HOUSTON, TX 77084
   TEL 281-493-4140
   FAX 281-493-2211
3. SUE DOCUMENTS ONLY INCLUDE STORM SEWER LOCATIONS TO THE EXTENTS SHOWN.

KENNEDY CONSULTING
TBPE REGISTRATION NO. F-926

Texas Department of Transportation
© 2012

IH 35W FROM NORTH TARRANT PKWY TO IH 820

EXISTING UTILITY
STA 1430+00 TO STA 1442+00

SCALE 1" = 100' SHEET 4 OF 23

DESIGN	FED. RD. DIV. NO.	FEDERAL AID PROJECT NO.		HIGHWAY NO.
KCI	6	(SEE TITLE SHEET)		IH 35W
GRAPHICS	STATE	DISTRICT	COUNTY	SHEET NO.
KCI	TEXAS	FTW	TARRANT	1319
CHECK	CONTROL	SECTION	JOB	
KCI	0014	16	255, ETC.	

DRAWING DATE: 7/13/2012 FILENAME: S3B*EX-UTIL04*GTN.dgn

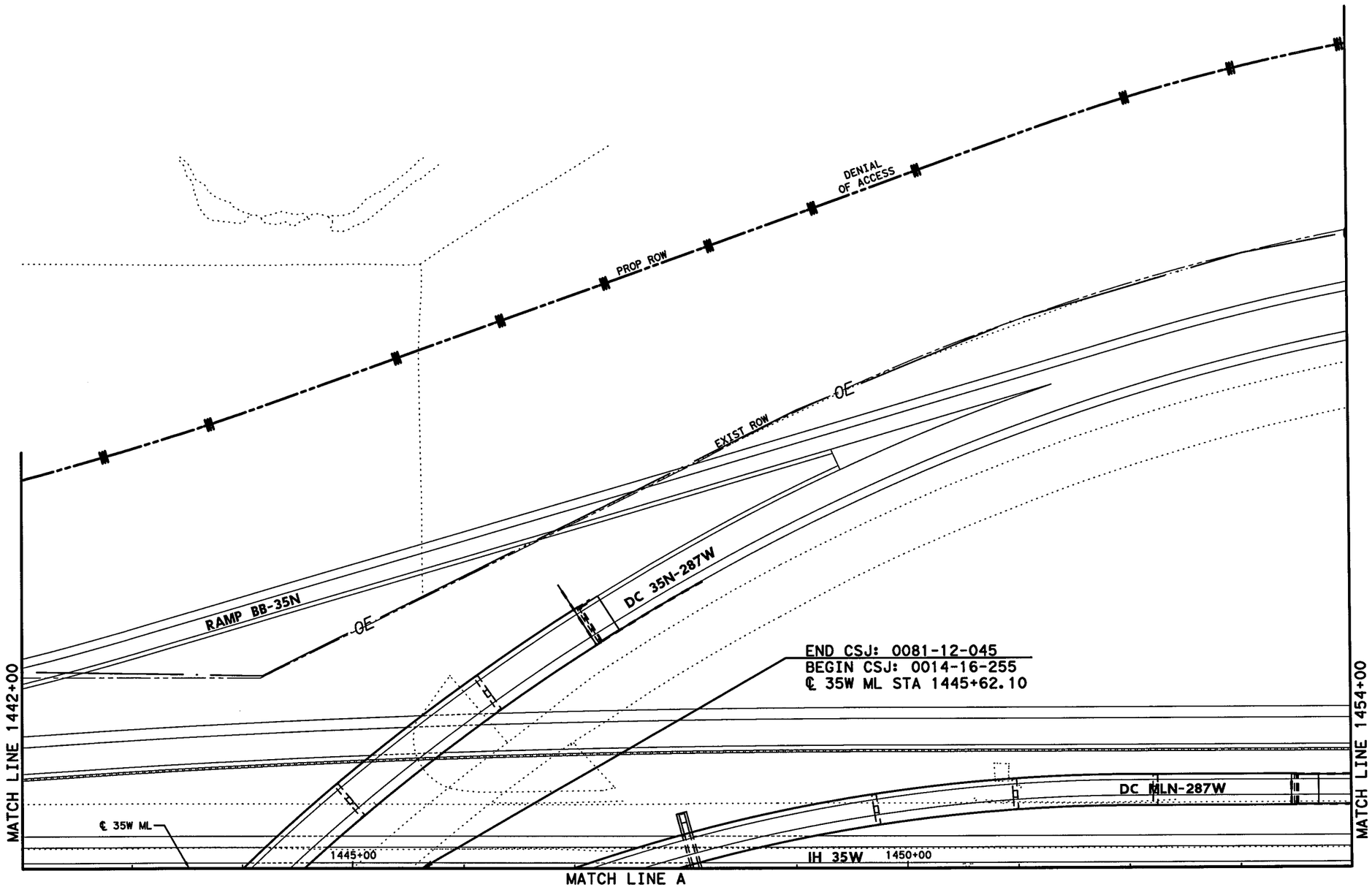

0' 50' 100'

SCALE IN FEET

LEGEND:

- CATVuG — CABLE TV
- EuG — ELECTRIC
- FO — FIBER OPTIC
- G — GAS
- OE — OVERHEAD UTILITIES
- STM — STORM
- TuG — TELEPHONE
- TC — TRAFFIC CONTROL
- Unk — UNKNOWN
- W — WATER
- WW — WASTEWATER

NOTES:

1. UTILITIES SHOWN ARE APPROXIMATE AND ARE INTENDED FOR GENERAL INFORMATION ONLY. IT IS THE CONTRACTOR'S RESPONSIBILITY TO CONTACT ALL UTILITY OWNERS FOR ACTUAL LOCATIONS.
2. REFER TO SUBSURFACE UTILITY ENGINEERING (SUE) DOCUMENTS SIGNED AND SEALED BY OTHERS UNDER SEPERATE CONTRACT FOR ADDITIONAL INFORMATION.
   SUE PROVIDED BY:
   AIA ENGINEERS, LTD
   15310 PARK ROW
   HOUSTON, TX 77084
   TEL 281-493-4140
   FAX 281-493-2211
3. SUE DOCUMENTS ONLY INCLUDE STORM SEWER LOCATIONS TO THE EXTENTS SHOWN.

KENNEDY CONSULTING
TBPE REGISTRATION NO. F-926

Texas Department of Transportation
© 2012

IH 35W FROM NORTH TARRANT PKWY TO IH 820

EXISTING UTILITY
STA 1442+00 TO STA 1454+00 (LT)

SCALE 1" = 100' SHEET 5 OF 23

DESIGN	FED.RD. DIV.NO.	FEDERAL AID PROJECT NO.		HIGHWAY NO.
KCI	6	(SEE TITLE SHEET)		IH 35W
GRAPHICS	STATE	DISTRICT	COUNTY	SHEET NO.
KCI	TEXAS	FTW	TARRANT	1320
CHECK	CONTROL	SECTION	JOB	
KCI	0014	16	255, ETC.	

FILENAME: S3B*EX-UTIL05*GTN.dgn

DRAWING DATE: 7/13/2012

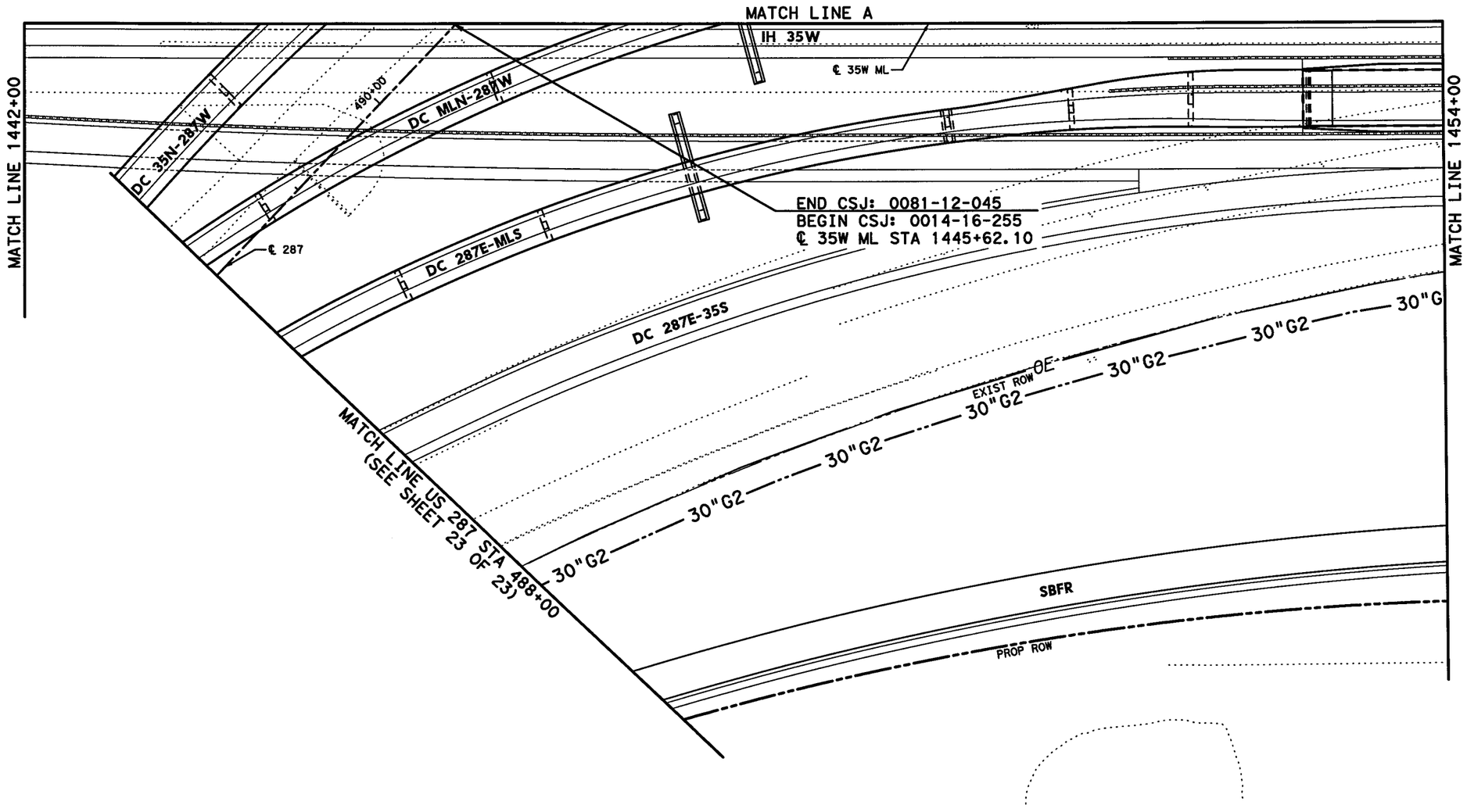

0' 50' 100'

SCALE IN FEET

LEGEND:

CATVuG	CABLE TV
EuG	ELECTRIC
FO	FIBER OPTIC
G	GAS
OE	OVERHEAD UTILITIES
STM	STORM
TuG	TELEPHONE
TC	TRAFFIC CONTROL
Unk	UNKNOWN
W	WATER
WW	WASTEWATER

NOTES:

1. UTILITIES SHOWN ARE APPROXIMATE AND ARE INTENDED FOR GENERAL INFORMATION ONLY. IT IS THE CONTRACTOR'S RESPONSIBILITY TO CONTACT ALL UTILITY OWNERS FOR ACTUAL LOCATIONS.
2. REFER TO SUBSURFACE UTILITY ENGINEERING (SUE) DOCUMENTS SIGNED AND SEALED BY OTHERS UNDER SEPERATE CONTRACT FOR ADDITIONAL INFORMATION.
   SUE PROVIDED BY:
   AIA ENGINEERS, LTD
   15310 PARK ROW
   HOUSTON, TX 77084
   TEL 281-493-4140
   FAX 281-493-2211
3. SUE DOCUMENTS ONLY INCLUDE STORM SEWER LOCATIONS TO THE EXTENTS SHOWN.

KENNEDY CONSULTING
TBPE REGISTRATION NO. F-926

Texas Department of Transportation
© 2012

IH 35W FROM NORTH TARRANT PKWY TO IH 820

EXISTING UTILITY
STA 1442+00 TO STA 1454+00 (RT)

SCALE 1" = 100' SHEET 6 OF 23

DESIGN	FED. RD. DIV. NO.	FEDERAL AID PROJECT NO.		HIGHWAY NO.
KCI	6	(SEE TITLE SHEET)		IH 35W
GRAPHICS	STATE	DISTRICT	COUNTY	SHEET NO.
KCI	TEXAS	FTW	TARRANT	1321
CHECK	CONTROL	SECTION	JOB	
KCI	0014	16	255, ETC.	

CHECK KCI

DRAWING DATE: 7/13/2012 FILENAME: S3B*EX-UTIL06*GTN.dgn

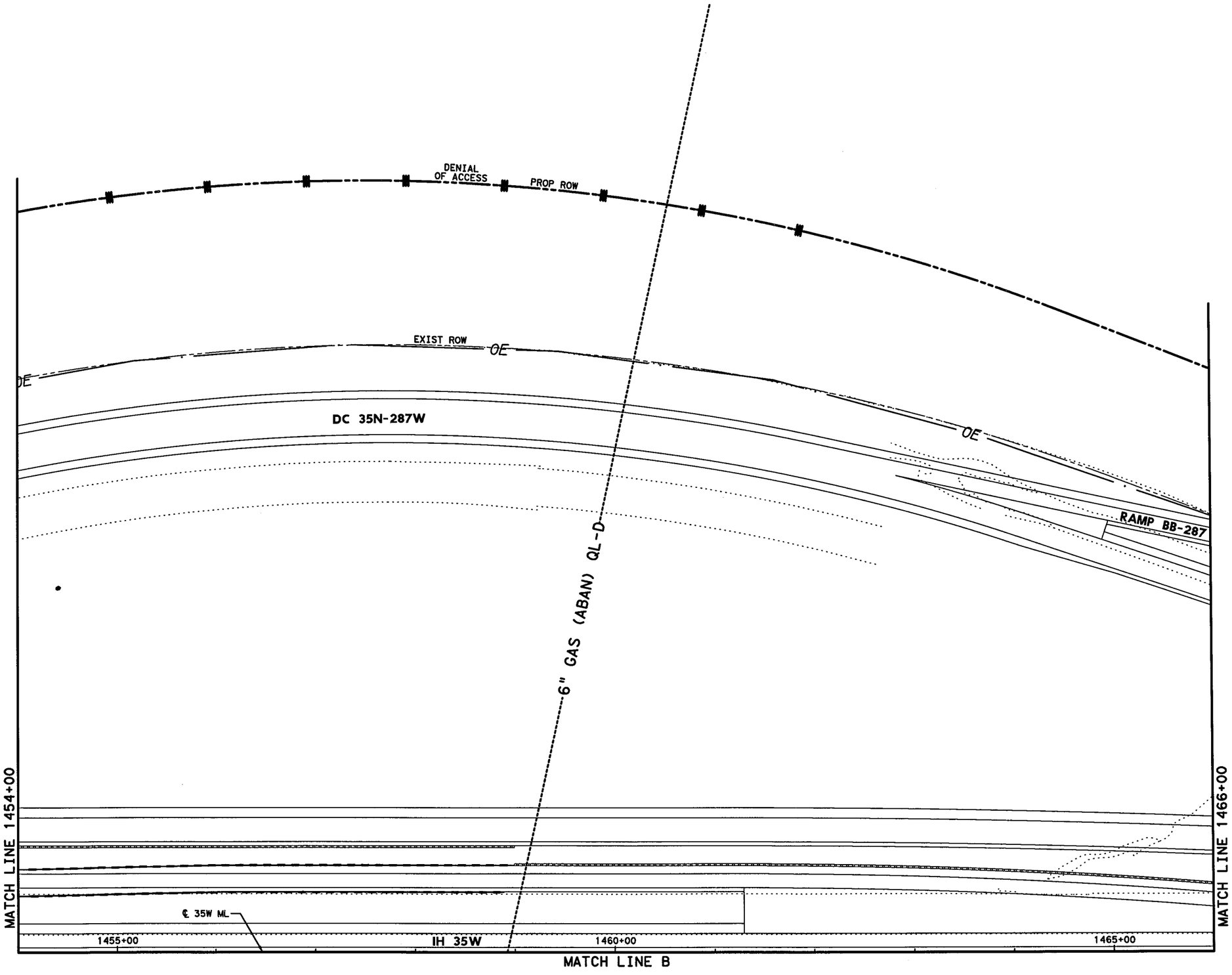

0' 50' 100'

SCALE IN FEET

LEGEND:

- CATVuG — CABLE TV
- EuG — ELECTRIC
- FO — FIBER OPTIC
- G — GAS
- OE — OVERHEAD UTILITIES
- STM — STORM
- TuG — TELEPHONE
- TC — TRAFFIC CONTROL
- Unk — UNKNOWN
- W — WATER
- WW — WASTEWATER

NOTES:

1. UTILITIES SHOWN ARE APPROXIMATE AND ARE INTENDED FOR GENERAL INFORMATION ONLY. IT IS THE CONTRACTOR'S RESPONSIBILITY TO CONTACT ALL UTILITY OWNERS FOR ACTUAL LOCATIONS.
2. REFER TO SUBSURFACE UTILITY ENGINEERING (SUE) DOCUMENTS SIGNED AND SEALED BY OTHERS UNDER SEPERATE CONTRACT FOR ADDITIONAL INFORMATION.
   SUE PROVIDED BY:
   AIA ENGINEERS, LTD
   15310 PARK ROW
   HOUSTON, TX 77084
   TEL 281-493-4140
   FAX 281-493-2211
3. SUE DOCUMENTS ONLY INCLUDE STORM SEWER LOCATIONS TO THE EXTENTS SHOWN.

KENNEDY CONSULTING
TBPE REGISTRATION NO. F-926

Texas Department of Transportation
© 2012

IH 35W FROM NORTH TARRANT PKWY TO IH 820

EXISTING UTILITY
STA 1454+00 TO STA 1466+00 (LT)

SCALE 1" = 100' SHEET 7 OF 23

DESIGN	FED. RD. DIV. NO.	FEDERAL AID PROJECT NO.		HIGHWAY NO.
KCI	6	(SEE TITLE SHEET)		IH 35W
GRAPHICS	STATE	DISTRICT	COUNTY	SHEET NO.
KCI	TEXAS	FTW	TARRANT	1322
CHECK	CONTROL	SECTION	JOB	
KCI	0014	16	255, ETC.	

FILENAME: S3B*EX-UTIL07*GTN.dgn

DRAWING DATE: 7/13/2012

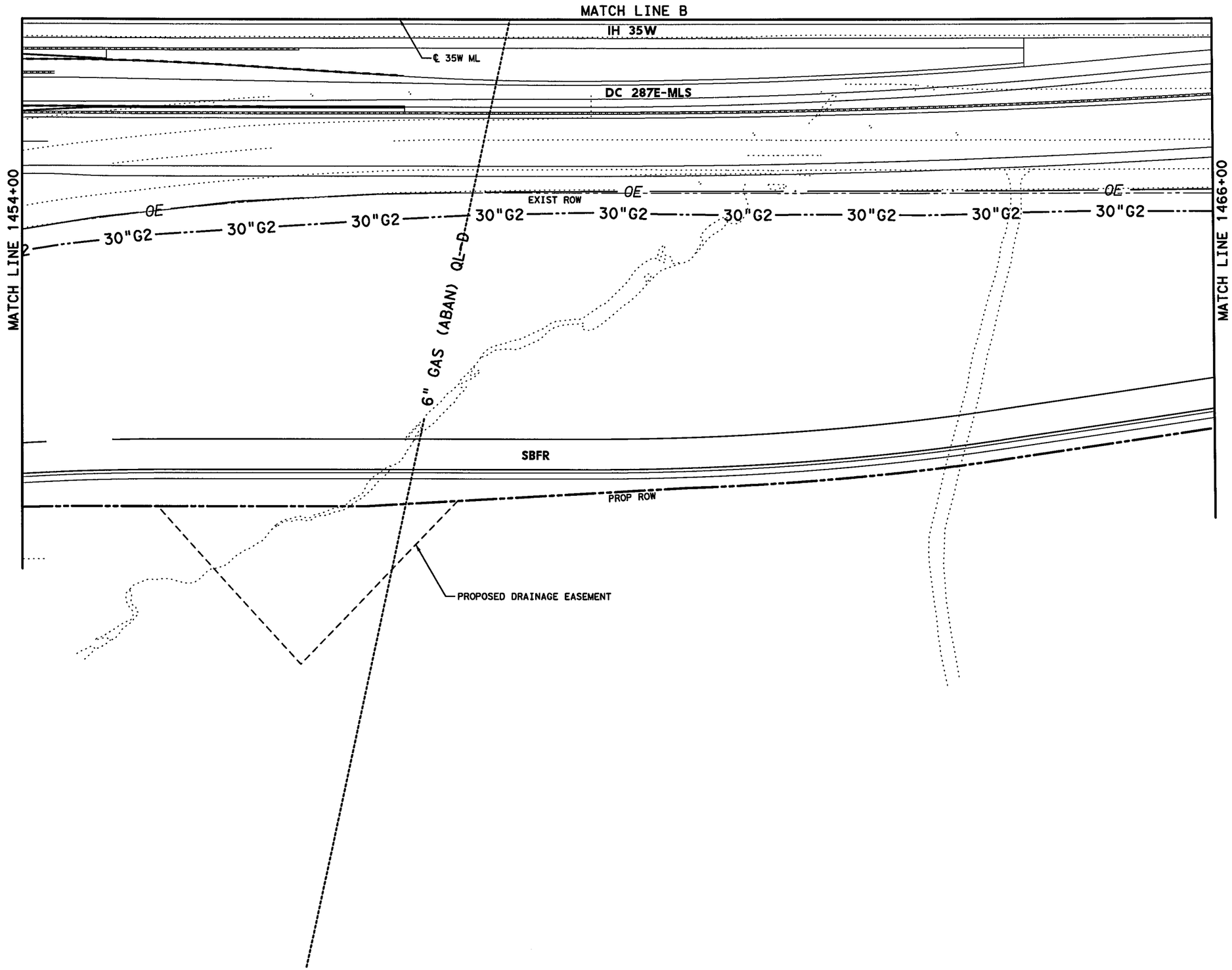

0' 50' 100'

SCALE IN FEET

LEGEND:

CATVuG	CABLE TV
EuG	ELECTRIC
FO	FIBER OPTIC
G	GAS
OE	OVERHEAD UTILITIES
STM	STORM
TuG	TELEPHONE
TC	TRAFFIC CONTROL
Unk	UNKNOWN
W	WATER
WW	WASTEWATER

NOTES:

1. UTILITIES SHOWN ARE APPROXIMATE AND ARE INTENDED FOR GENERAL INFORMATION ONLY. IT IS THE CONTRACTOR'S RESPONSIBILITY TO CONTACT ALL UTILITY OWNERS FOR ACTUAL LOCATIONS.
2. REFER TO SUBSURFACE UTILITY ENGINEERING (SUE) DOCUMENTS SIGNED AND SEALED BY OTHERS UNDER SEPERATE CONTRACT FOR ADDITIONAL INFORMATION.
   SUE PROVIDED BY:
   AIA ENGINEERS, LTD
   15310 PARK ROW
   HOUSTON, TX 77084
   TEL 281-493-4140
   FAX 281-493-2211
3. SUE DOCUMENTS ONLY INCLUDE STORM SEWER LOCATIONS TO THE EXTENTS SHOWN.

KENNEDY CONSULTING
TBPE REGISTRATION NO. F-926

Texas Department of Transportation
© 2012

IH 35W FROM NORTH TARRANT PKWY TO IH 820

EXISTING UTILITY
STA 1454+00 TO STA 1466+00 (RT)

SCALE 1" = 100' SHEET 8 OF 23

DESIGN	FED. RD. DIV. NO.	FEDERAL AID PROJECT NO.		HIGHWAY NO.
KCI	6	(SEE TITLE SHEET)		IH 35W
GRAPHICS KCI	STATE	DISTRICT	COUNTY	SHEET NO.
CHECK KCI	TEXAS	FTW	TARRANT	1323
CHECK	CONTROL	SECTION	JOB	
KCI	0014	16	255, ETC.	

DRAWING DATE: 7/13/2012 FILENAME: S3B*EX-UTIL08*GTN.dgn

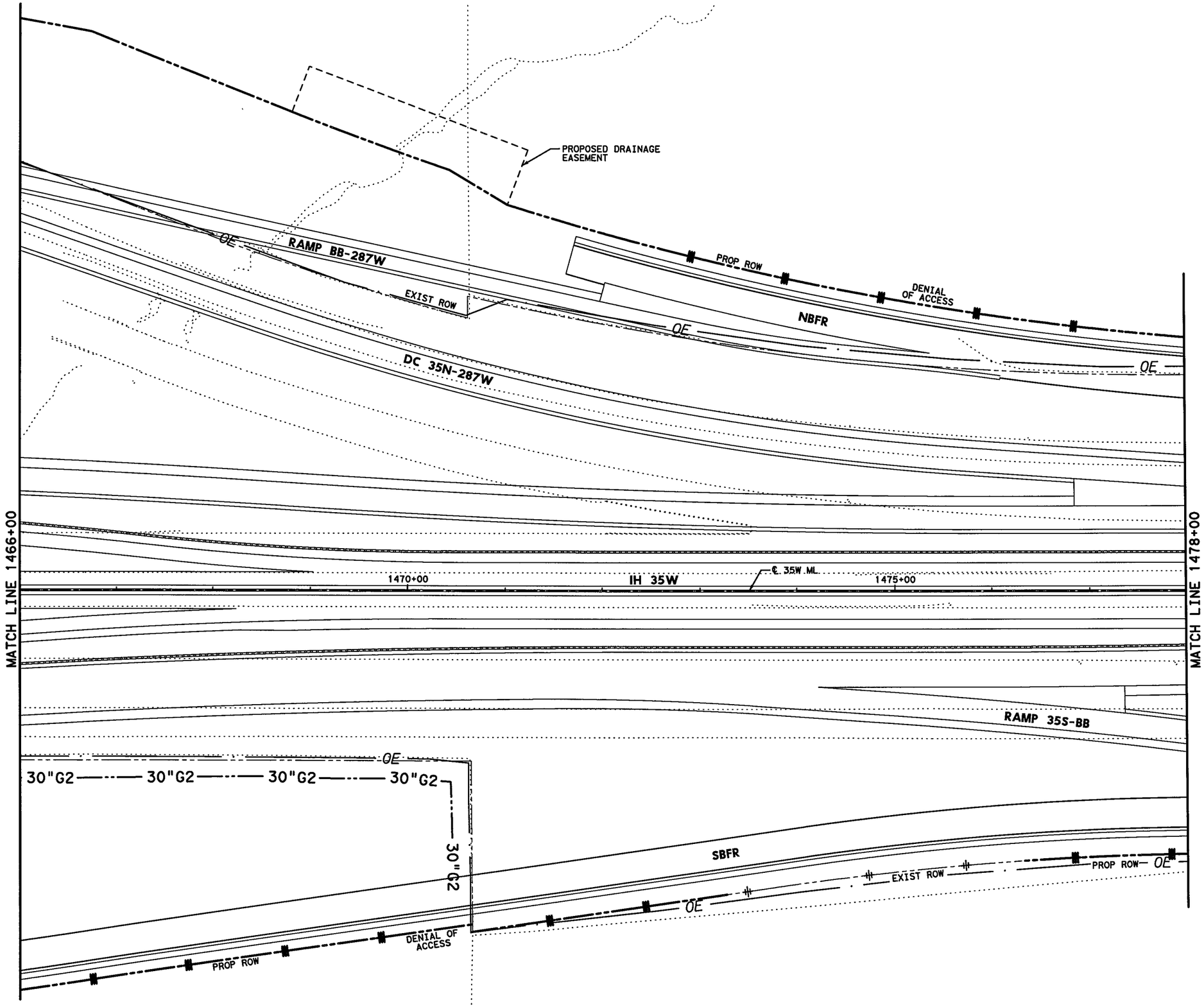

0' 50' 100'

SCALE IN FEET

LEGEND:

CATVuG	CABLE TV
EuG	ELECTRIC
FO	FIBER OPTIC
G	GAS
OE	OVERHEAD UTILITIES
STM	STORM
TuG	TELEPHONE
TC	TRAFFIC CONTROL
Unk	UNKNOWN
W	WATER
WW	WASTEWATER

NOTES:

1. UTILITIES SHOWN ARE APPROXIMATE AND ARE INTENDED FOR GENERAL INFORMATION ONLY. IT IS THE CONTRACTOR'S RESPONSIBILITY TO CONTACT ALL UTILITY OWNERS FOR ACTUAL LOCATIONS.
2. REFER TO SUBSURFACE UTILITY ENGINEERING (SUE) DOCUMENTS SIGNED AND SEALED BY OTHERS UNDER SEPERATE CONTRACT FOR ADDITIONAL INFORMATION.
   SUE PROVIDED BY:
   AIA ENGINEERS, LTD
   15310 PARK ROW
   HOUSTON, TX 77084
   TEL 281-493-4140
   FAX 281-493-2211
3. SUE DOCUMENTS ONLY INCLUDE STORM SEWER LOCATIONS TO THE EXTENTS SHOWN.

KENNEDY CONSULTING
TBPE REGISTRATION NO. F-926

Texas Department of Transportation
© 2012

IH 35W FROM NORTH TARRANT PKWY TO IH 820

EXISTING UTILITY
STA 1466+00 TO STA 1478+00

SCALE 1" = 100'

DESIGN	FED. RD. DIV. NO.	FEDERAL AID PROJECT NO.		HIGHWAY NO.
KCI	6	(SEE TITLE SHEET)		IH 35W
GRAPHICS KCI	STATE	DISTRICT	COUNTY	SHEET NO.
CHECK KCI	TEXAS	FTW	TARRANT	1324
CHECK KCI	CONTROL 0014	SECTION 16	JOB 255, ETC.	

DRAWING DATE: 7/13/2012 FILENAME: S3B*EX-UTIL09*GTN.dgn

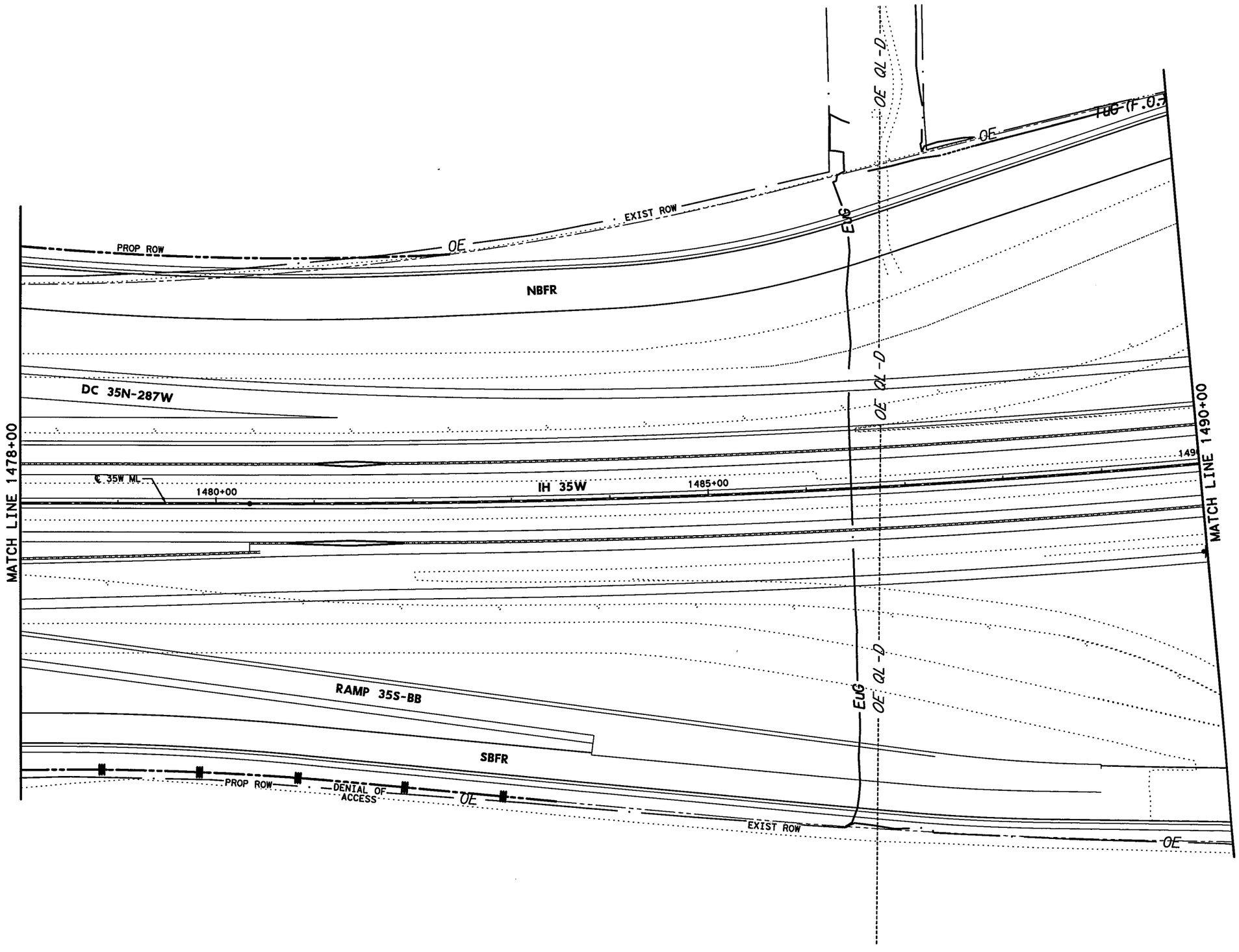

0' 50' 100'

SCALE IN FEET

LEGEND:

- CATVuG — CABLE TV
- EuG — ELECTRIC
- FO — FIBER OPTIC
- G — GAS
- OE — OVERHEAD UTILITIES
- STM — STORM
- TuG — TELEPHONE
- TC — TRAFFIC CONTROL
- Unk — UNKNOWN
- W — WATER
- WW — WASTEWATER

NOTES:

1. UTILITIES SHOWN ARE APPROXIMATE AND ARE INTENDED FOR GENERAL INFORMATION ONLY. IT IS THE CONTRACTOR'S RESPONSIBILITY TO CONTACT ALL UTILITY OWNERS FOR ACTUAL LOCATIONS.
2. REFER TO SUBSURFACE UTILITY ENGINEERING (SUE) DOCUMENTS SIGNED AND SEALED BY OTHERS UNDER SEPERATE CONTRACT FOR ADDITIONAL INFORMATION.
   SUE PROVIDED BY:
   AIA ENGINEERS, LTD
   15310 PARK ROW
   HOUSTON, TX 77084
   TEL 281-493-4140
   FAX 281-493-2211
3. SUE DOCUMENTS ONLY INCLUDE STORM SEWER LOCATIONS TO THE EXTENTS SHOWN.

KENNEDY CONSULTING
TBPE REGISTRATION NO. F-926

Texas Department of Transportation
© 2012

IH 35W FROM NORTH TARRANT PKWY TO IH 820

EXISTING UTILITY
STA 1478+00 TO STA 1490+00

SCALE 1" = 100' SHEET 10 OF 23

DESIGN	FED. RD. DIV. NO.	FEDERAL AID PROJECT NO.		HIGHWAY NO.
KCI	6	(SEE TITLE SHEET)		IH 35W
GRAPHICS	STATE	DISTRICT	COUNTY	SHEET NO.
KCI	TEXAS	FTW	TARRANT	
CHECK	CONTROL	SECTION	JOB	1325
KCI	0014	16	255, ETC.	

FILENAME: S3B*EX-UTIL10*GTN.dgn

DRAWING DATE: 7/13/2012

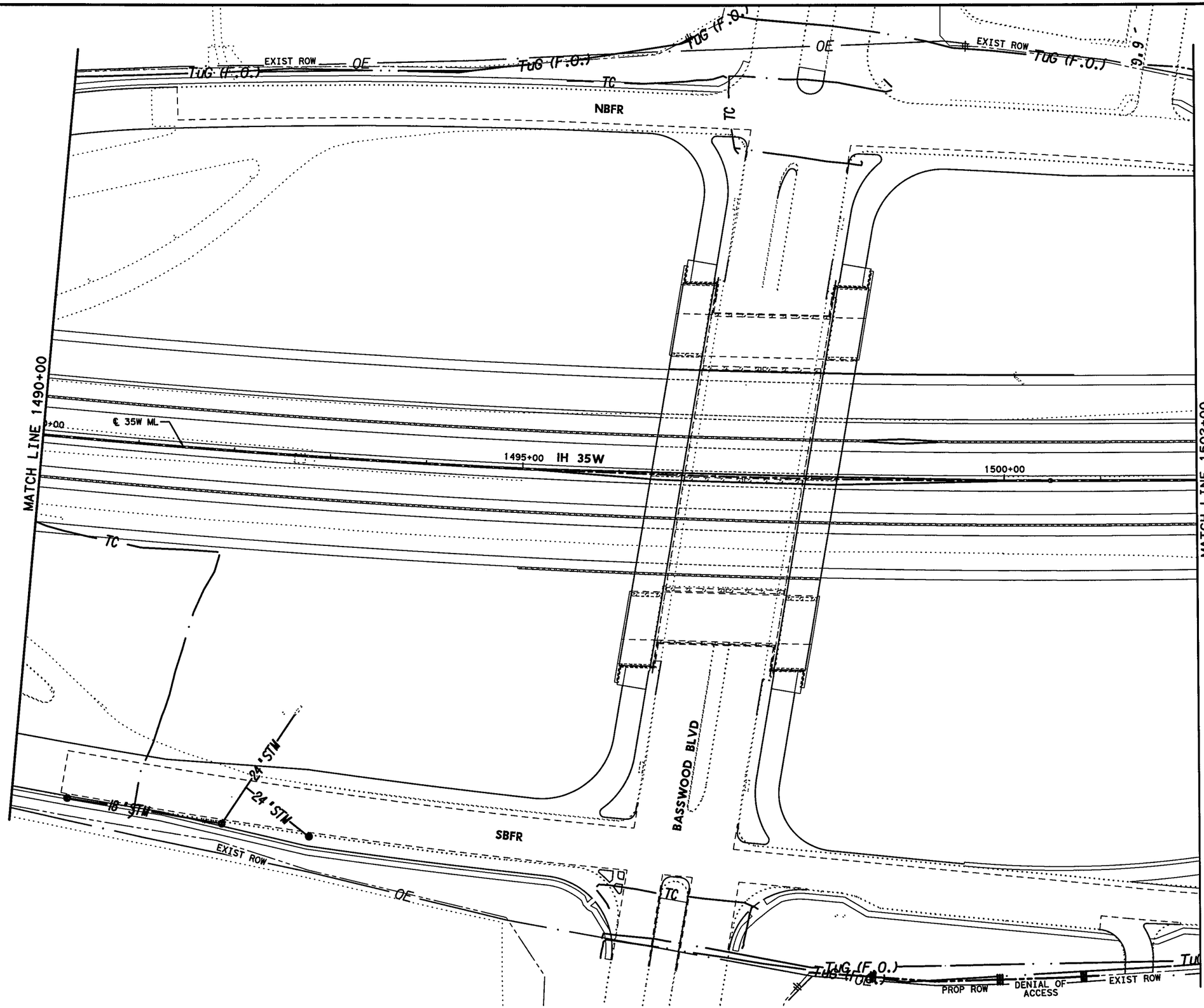

0' 50' 100'

SCALE IN FEET

LEGEND:

- CATVuG — CABLE TV
- EuG — ELECTRIC
- FO — FIBER OPTIC
- G — GAS
- OE — OVERHEAD UTILITIES
- STM — STORM
- TuG — TELEPHONE
- TC — TRAFFIC CONTROL
- Unk — UNKNOWN
- W — WATER
- WW — WASTEWATER

NOTES:

1. UTILITIES SHOWN ARE APPROXIMATE AND ARE INTENDED FOR GENERAL INFORMATION ONLY. IT IS THE CONTRACTOR'S RESPONSIBILITY TO CONTACT ALL UTILITY OWNERS FOR ACTUAL LOCATIONS.
2. REFER TO SUBSURFACE UTILITY ENGINEERING (SUE) DOCUMENTS SIGNED AND SEALED BY OTHERS UNDER SEPERATE CONTRACT FOR ADDITIONAL INFORMATION.
   SUE PROVIDED BY:
   AIA ENGINEERS, LTD
   15310 PARK ROW
   HOUSTON, TX 77084
   TEL 281-493-4140
   FAX 281-493-2211
3. SUE DOCUMENTS ONLY INCLUDE STORM SEWER LOCATIONS TO THE EXTENTS SHOWN.

KENNEDY CONSULTING
TBPE REGISTRATION NO. F-926

Texas Department of Transportation
© 2012

IH 35W FROM NORTH TARRANT PKWY TO IH 820

EXISTING UTILITY
STA 1490+00 TO STA 1502+00

SCALE 1" = 100'

SHEET 11 OF 23

DESIGN	FED. RD. DIV. NO.	FEDERAL AID PROJECT NO.		HIGHWAY NO.
KCI	6	(SEE TITLE SHEET)		IH 35W
GRAPHICS KCI	STATE	DISTRICT	COUNTY	SHEET NO.
CHECK KCI	TEXAS	FTW	TARRANT	1326
CHECK KCI	CONTROL 0014	SECTION 16	JOB 255, ETC.	

FILENAME: S3B*EX-UTIL11*GTN.dgn

DRAWING DATE: 7/13/2012

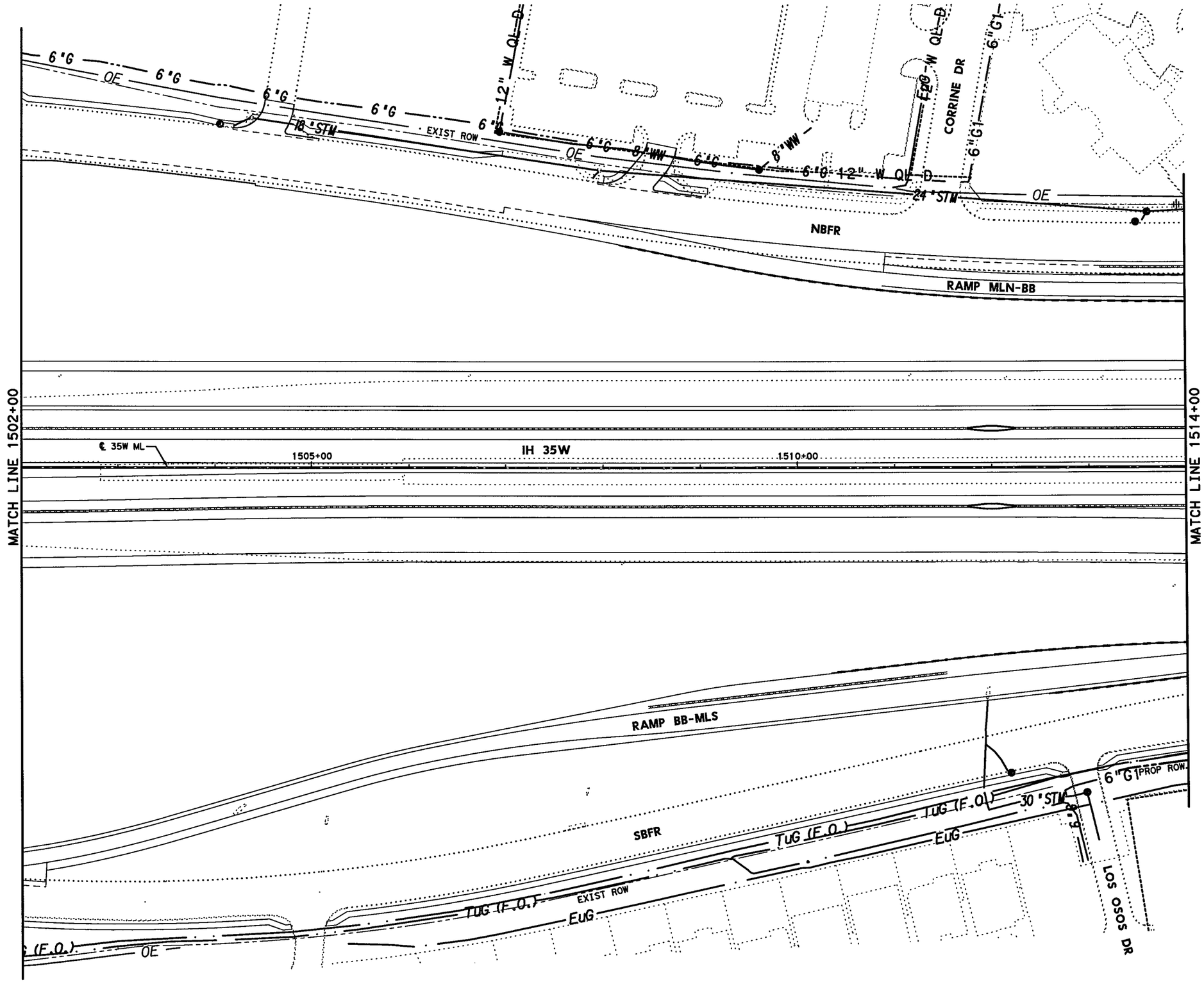

0' 50' 100'

SCALE IN FEET

LEGEND:

CATVuG	CABLE TV
EuG	ELECTRIC
FO	FIBER OPTIC
G	GAS
OE	OVERHEAD UTILITIES
STM	STORM
TuG	TELEPHONE
TC	TRAFFIC CONTROL
Unk	UNKNOWN
W	WATER
WW	WASTEWATER

NOTES:

1. UTILITIES SHOWN ARE APPROXIMATE AND ARE INTENDED FOR GENERAL INFORMATION ONLY. IT IS THE CONTRACTOR'S RESPONSIBILITY TO CONTACT ALL UTILITY OWNERS FOR ACTUAL LOCATIONS.
2. REFER TO SUBSURFACE UTILITY ENGINEERING (SUE) DOCUMENTS SIGNED AND SEALED BY OTHERS UNDER SEPERATE CONTRACT FOR ADDITIONAL INFORMATION.
   SUE PROVIDED BY:
   AIA ENGINEERS, LTD
   15310 PARK ROW
   HOUSTON, TX 77084
   TEL 281-493-4140
   FAX 281-493-2211
3. SUE DOCUMENTS ONLY INCLUDE STORM SEWER LOCATIONS TO THE EXTENTS SHOWN.

KENNEDY CONSULTING
TBPE REGISTRATION NO. F-926

Texas Department of Transportation
© 2012

IH 35W FROM NORTH TARRANT PKWY TO IH 820

EXISTING UTILITY
STA 1502+00 TO STA 1514+00

SCALE 1" = 100' SHEET 12 OF 23

DESIGN	FED. RD. DIV. NO.	FEDERAL AID PROJECT NO.		HIGHWAY NO.
KCI	6	(SEE TITLE SHEET)		IH 35W
GRAPHICS	STATE	DISTRICT	COUNTY	SHEET NO.
KCI	TEXAS	FTW	TARRANT	
CHECK	CONTROL	SECTION	JOB	1327
KCI	0014	16	255, ETC.	

FILENAME: S3B*EX-UTIL12*GTN.dgn

DRAWING DATE: 7/13/2012

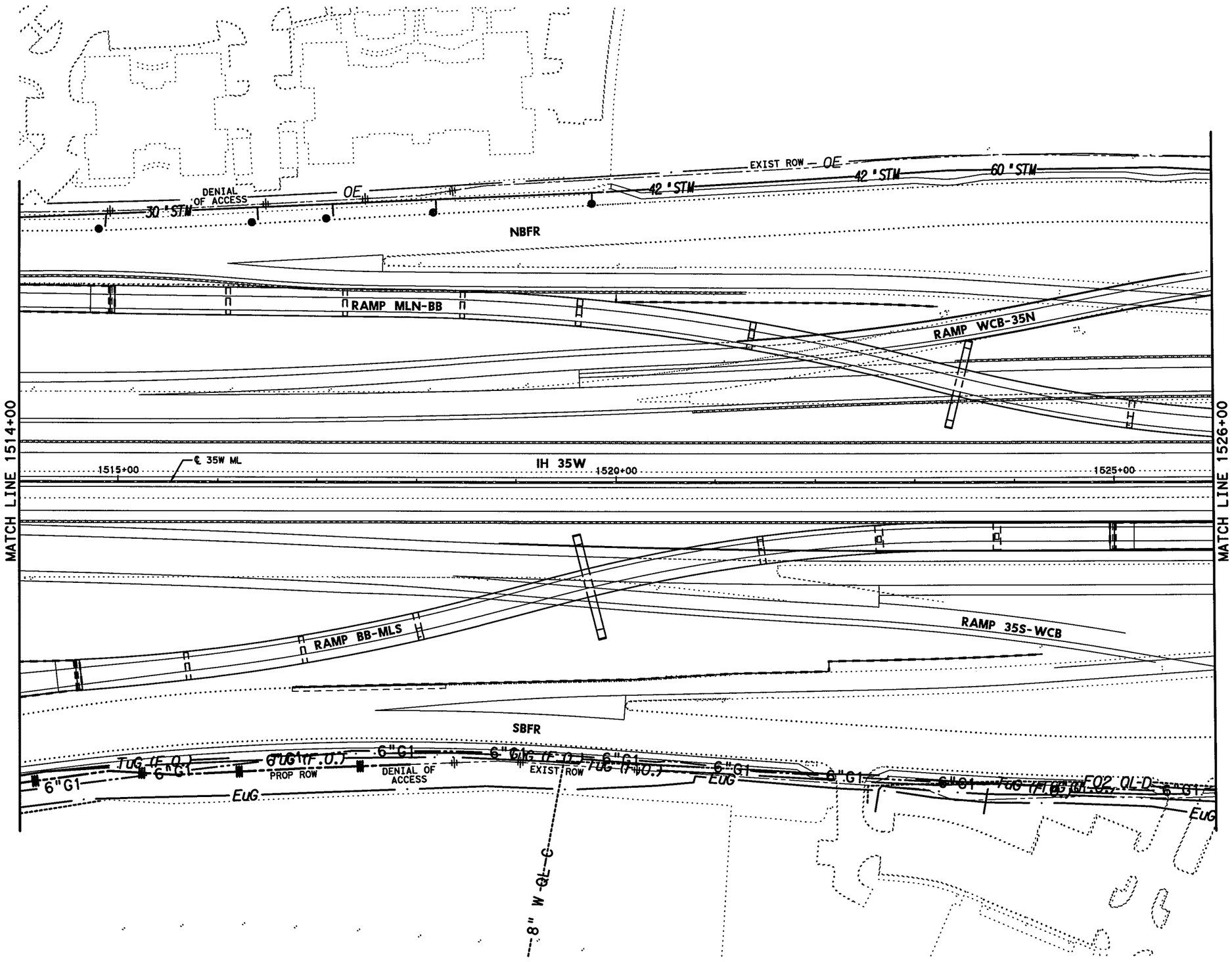

0' 50' 100'

SCALE IN FEET

LEGEND:

CATVuG	CABLE TV
EuG	ELECTRIC
FO	FIBER OPTIC
G	GAS
OE	OVERHEAD UTILITIES
STM	STORM
TuG	TELEPHONE
TC	TRAFFIC CONTROL
Unk	UNKNOWN
W	WATER
WW	WASTEWATER

NOTES:

1. UTILITIES SHOWN ARE APPROXIMATE AND ARE INTENDED FOR GENERAL INFORMATION ONLY. IT IS THE CONTRACTOR'S RESPONSIBILITY TO CONTACT ALL UTILITY OWNERS FOR ACTUAL LOCATIONS.
2. REFER TO SUBSURFACE UTILITY ENGINEERING (SUE) DOCUMENTS SIGNED AND SEALED BY OTHERS UNDER SEPERATE CONTRACT FOR ADDITIONAL INFORMATION.
   SUE PROVIDED BY:
   AIA ENGINEERS, LTD
   15310 PARK ROW
   HOUSTON, TX 77084
   TEL 281-493-4140
   FAX 281-493-2211
3. SUE DOCUMENTS ONLY INCLUDE STORM SEWER LOCATIONS TO THE EXTENTS SHOWN.

KENNEDY CONSULTING
TBPE REGISTRATION NO. F-926

Texas Department of Transportation
© 2012

IH 35W FROM NORTH TARRANT PKWY TO IH 820

EXISTING UTILITY
STA 1514+00 TO STA 1526+00

SCALE 1" = 100' SHEET 13 OF 23

DESIGN	FED. RD. DIV. NO.	FEDERAL AID PROJECT NO.		HIGHWAY NO.
KCI	6	(SEE TITLE SHEET)		IH 35W
GRAPHICS	STATE	DISTRICT	COUNTY	SHEET NO.
KCI	TEXAS	FTW	TARRANT	1328
CHECK	CONTROL	SECTION	JOB	
KCI	0014	16	255, ETC.	

FILENAME: S3B*EX-UTIL13*GTN.dgn

DRAWING DATE: 7/13/2012

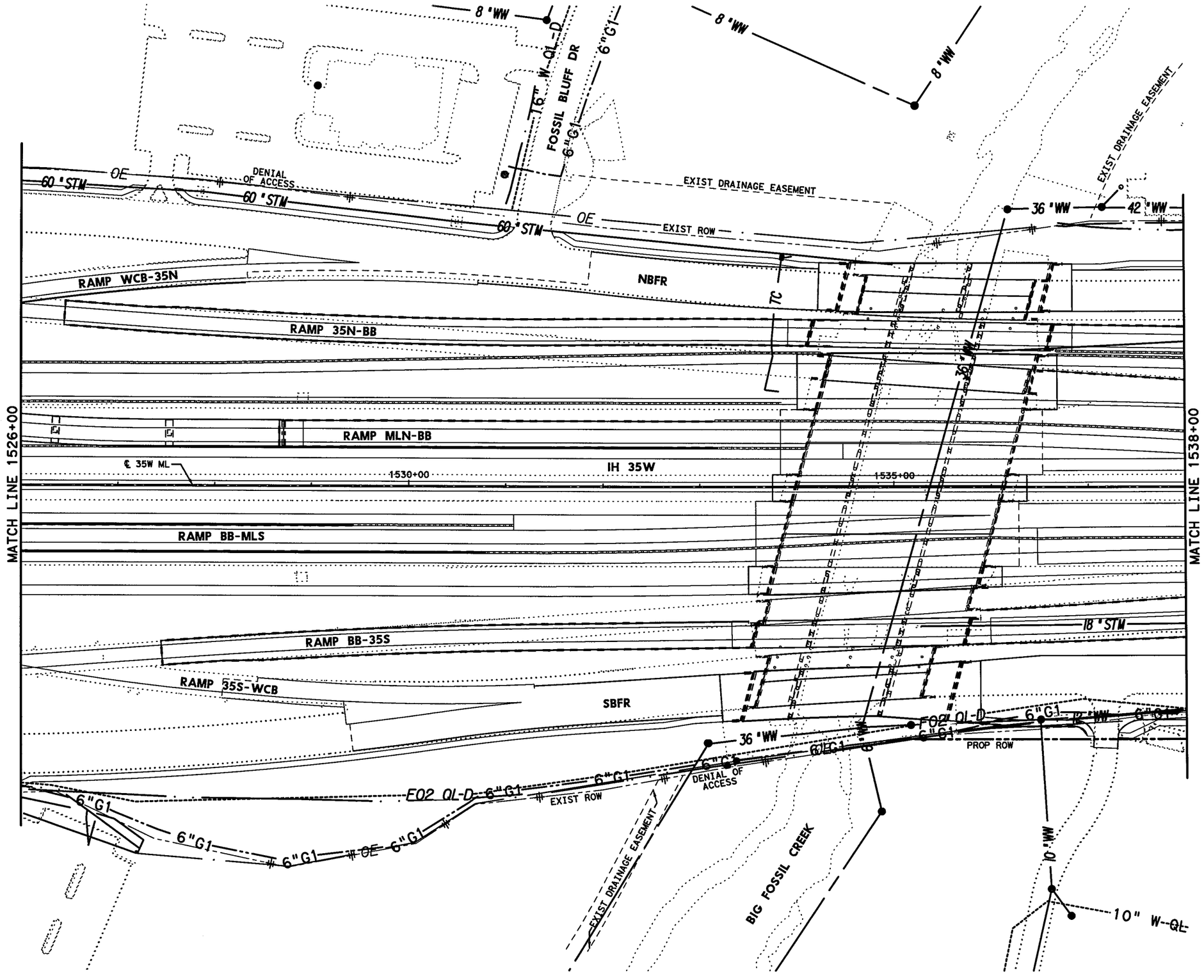

0' 50' 100'

SCALE IN FEET

LEGEND:

- CATVuG — CABLE TV
- EuG — ELECTRIC
- FO — FIBER OPTIC
- G — GAS
- OE — OVERHEAD UTILITIES
- STM — STORM
- TuG — TELEPHONE
- TC — TRAFFIC CONTROL
- Unk — UNKNOWN
- W — WATER
- WW — WASTEWATER

NOTES:

1. UTILITIES SHOWN ARE APPROXIMATE AND ARE INTENDED FOR GENERAL INFORMATION ONLY. IT IS THE CONTRACTOR'S RESPONSIBILITY TO CONTACT ALL UTILITY OWNERS FOR ACTUAL LOCATIONS.
2. REFER TO SUBSURFACE UTILITY ENGINEERING (SUE) DOCUMENTS SIGNED AND SEALED BY OTHERS UNDER SEPERATE CONTRACT FOR ADDITIONAL INFORMATION.
   SUE PROVIDED BY:
   AIA ENGINEERS, LTD
   15310 PARK ROW
   HOUSTON, TX 77084
   TEL 281-493-4140
   FAX 281-493-2211
3. SUE DOCUMENTS ONLY INCLUDE STORM SEWER LOCATIONS TO THE EXTENTS SHOWN.

KENNEDY CONSULTING
TBPE REGISTRATION NO. F-926

Texas Department of Transportation
© 2012

IH 35W FROM NORTH TARRANT PKWY TO IH 820

EXISTING UTILITY
STA 1526+00 TO STA 1538+00

SCALE 1" = 100' SHEET 14 OF 23

DESIGN	FED.RD. DIV.NO.	FEDERAL AID PROJECT NO.		HIGHWAY NO.
KCI	6	(SEE TITLE SHEET)		IH 35W
GRAPHICS	STATE	DISTRICT	COUNTY	SHEET NO.
KCI	TEXAS	FTW	TARRANT	1329
CHECK	CONTROL	SECTION	JOB	
KCI	0014	16	255, ETC.	

FILENAME: S38*EX-UTIL14*GTN.dgn

DRAWING DATE: 7/13/2012

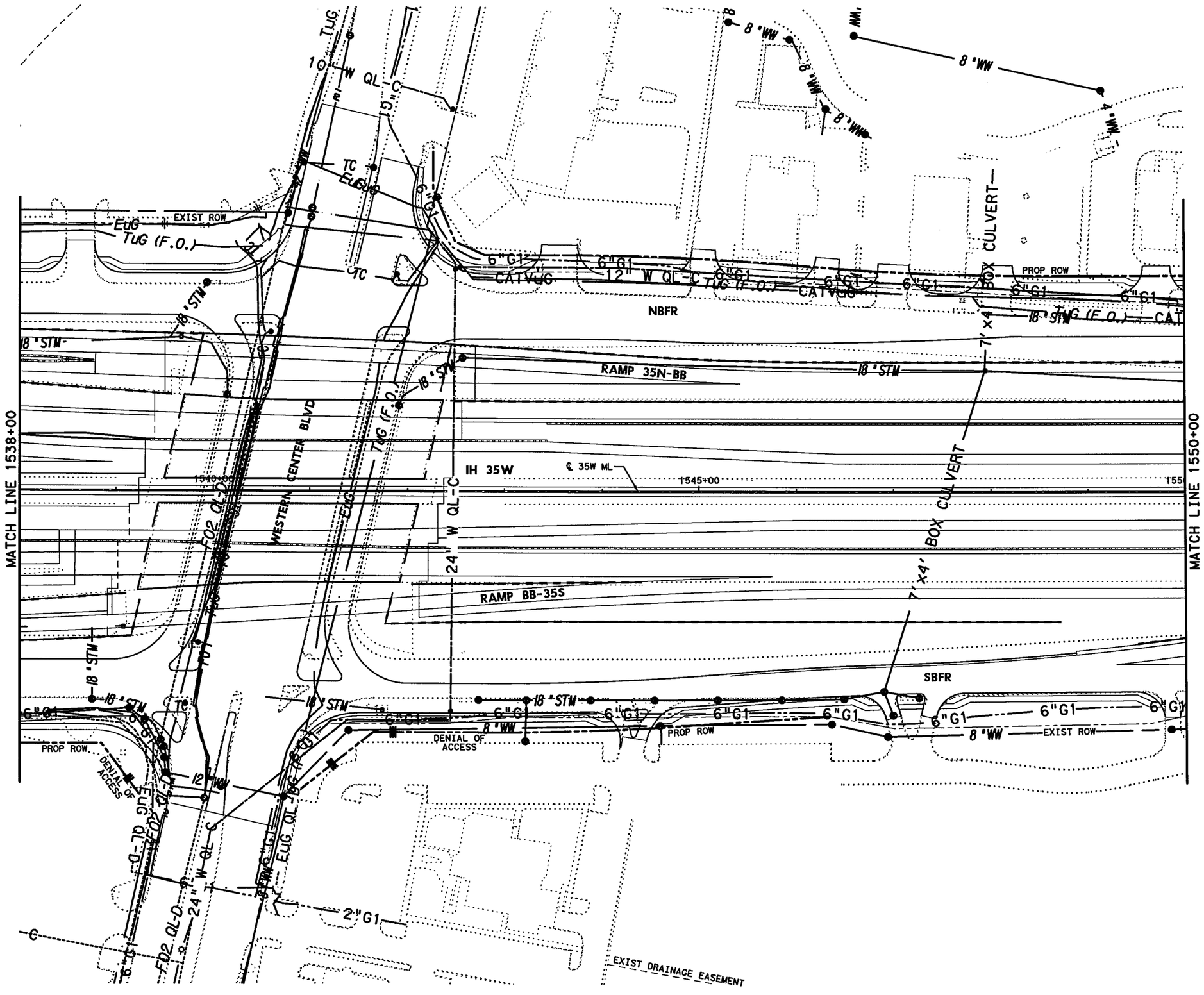

0' 50' 100'

SCALE IN FEET

LEGEND:

CATVuG	CABLE TV
EuG	ELECTRIC
FO	FIBER OPTIC
G	GAS
OE	OVERHEAD UTILITIES
STM	STORM
TuG	TELEPHONE
TC	TRAFFIC CONTROL
Unk	UNKNOWN
W	WATER
WW	WASTEWATER

NOTES:

1. UTILITIES SHOWN ARE APPROXIMATE AND ARE INTENDED FOR GENERAL INFORMATION ONLY. IT IS THE CONTRACTOR'S RESPONSIBILITY TO CONTACT ALL UTILITY OWNERS FOR ACTUAL LOCATIONS.
2. REFER TO SUBSURFACE UTILITY ENGINEERING (SUE) DOCUMENTS SIGNED AND SEALED BY OTHERS UNDER SEPERATE CONTRACT FOR ADDITIONAL INFORMATION.
   SUE PROVIDED BY:
   AIA ENGINEERS, LTD
   15310 PARK ROW
   HOUSTON, TX 77084
   TEL 281-493-4140
   FAX 281-493-2211
3. SUE DOCUMENTS ONLY INCLUDE STORM SEWER LOCATIONS TO THE EXTENTS SHOWN.

KENNEDY CONSULTING
TBPE REGISTRATION NO. F-926

Texas Department of Transportation
© 2012

IH 35W FROM NORTH TARRANT PKWY TO IH 820

EXISTING UTILITY
STA 1538+00 TO STA 1550+00

SCALE 1" = 100' SHEET 15 OF 23

DESIGN	FED. RD. DIV. NO.	FEDERAL AID PROJECT NO.		HIGHWAY NO.
KCI	6	(SEE TITLE SHEET)		IH 35W
GRAPHICS	STATE	DISTRICT	COUNTY	SHEET NO.
KCI	TEXAS	FTW	TARRANT	1330
CHECK	CONTROL	SECTION	JOB	
KCI	0014	16	255, ETC.	

FILENAME: S3B*EX-UTIL15*GTN.dgn

DRAWING DATE: 7/13/2012

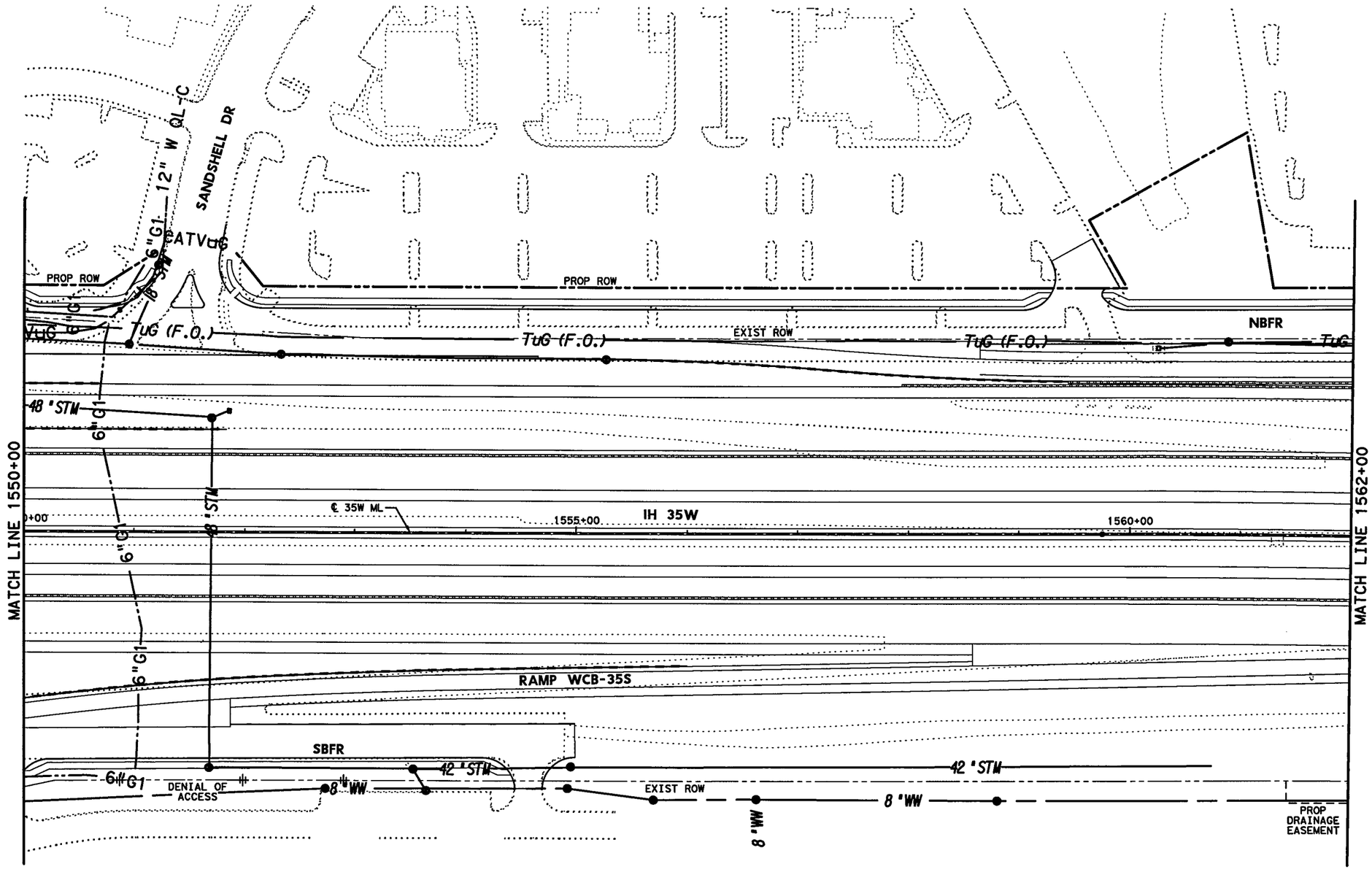

0' 50' 100'

SCALE IN FEET

LEGEND:

CATVuG	CABLE TV
EuG	ELECTRIC
FO	FIBER OPTIC
G	GAS
OE	OVERHEAD UTILITIES
STM	STORM
TuG	TELEPHONE
TC	TRAFFIC CONTROL
Unk	UNKNOWN
W	WATER
WW	WASTEWATER

NOTES:

1. UTILITIES SHOWN ARE APPROXIMATE AND ARE INTENDED FOR GENERAL INFORMATION ONLY. IT IS THE CONTRACTOR'S RESPONSIBILITY TO CONTACT ALL UTILITY OWNERS FOR ACTUAL LOCATIONS.
2. REFER TO SUBSURFACE UTILITY ENGINEERING (SUE) DOCUMENTS SIGNED AND SEALED BY OTHERS UNDER SEPERATE CONTRACT FOR ADDITIONAL INFORMATION.
   SUE PROVIDED BY:
   AIA ENGINEERS, LTD
   15310 PARK ROW
   HOUSTON, TX 77084
   TEL 281-493-4140
   FAX 281-493-2211
3. SUE DOCUMENTS ONLY INCLUDE STORM SEWER LOCATIONS TO THE EXTENTS SHOWN.

KENNEDY CONSULTING
TBPE REGISTRATION NO. F-926

Texas Department of Transportation
© 2012

IH 35W FROM NORTH TARRANT PKWY TO IH 820

EXISTING UTILITY
STA 1550+00 TO STA 1562+00

SCALE 1" = 100' SHEET 16 OF 23

DESIGN	FED. RD. DIV. NO.	FEDERAL AID PROJECT NO.		HIGHWAY NO.
KCI	6	(SEE TITLE SHEET)		IH 35W
GRAPHICS	STATE	DISTRICT	COUNTY	SHEET NO.
KCI	TEXAS	FTW	TARRANT	1331
CHECK	CONTROL	SECTION	JOB	
KCI	0014	16	255, ETC.	

DRAWING DATE: 7/13/2012 FILENAME: S3B*EX-UTIL16*GTN.dgn

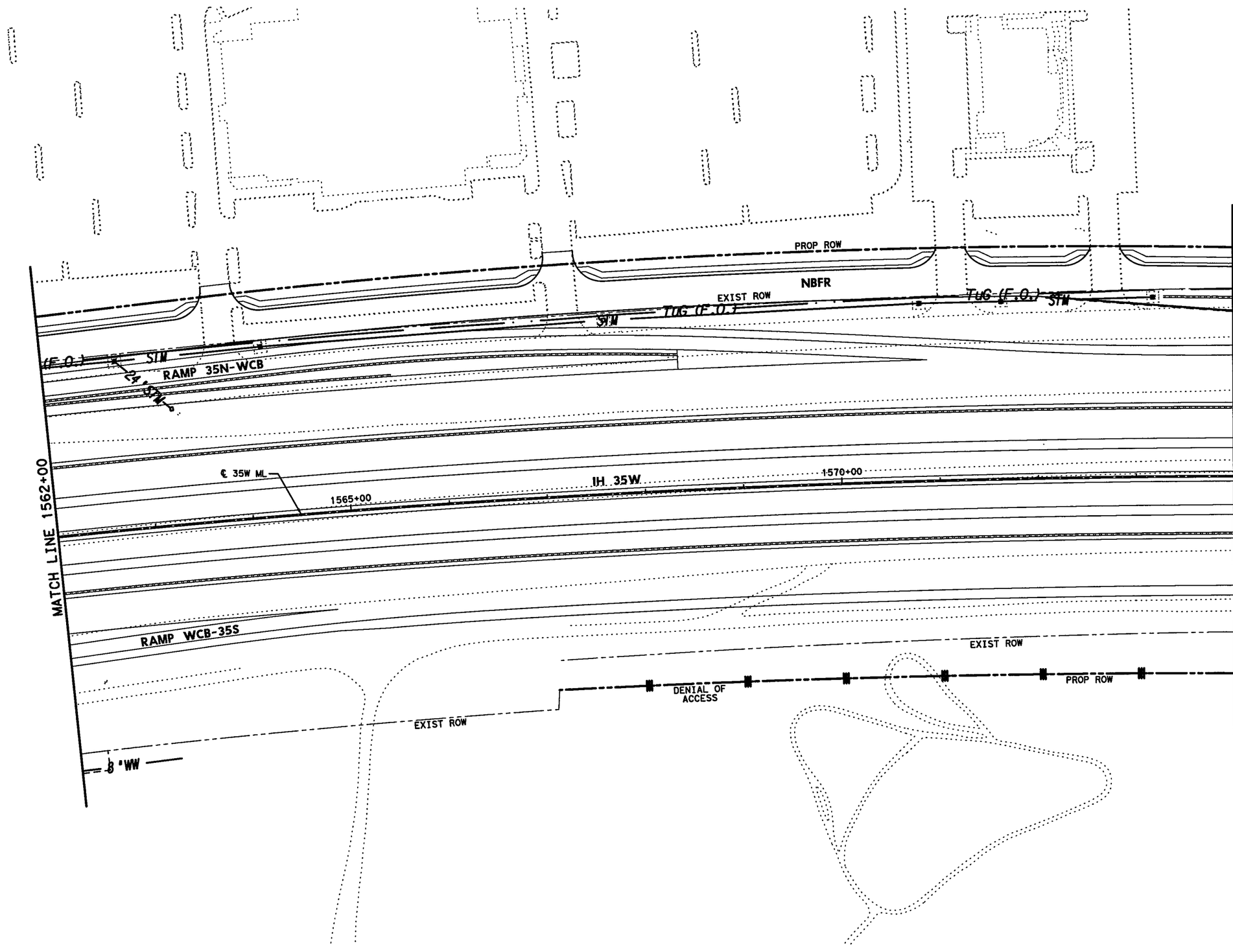

0' 50' 100'

SCALE IN FEET

LEGEND:

CATVuG	CABLE TV
EuG	ELECTRIC
FO	FIBER OPTIC
G	GAS
OE	OVERHEAD UTILITIES
STM	STORM
TuG	TELEPHONE
TC	TRAFFIC CONTROL
Unk	UNKNOWN
W	WATER
WW	WASTEWATER

NOTES:

1. UTILITIES SHOWN ARE APPROXIMATE AND ARE INTENDED FOR GENERAL INFORMATION ONLY. IT IS THE CONTRACTOR'S RESPONSIBILITY TO CONTACT ALL UTILITY OWNERS FOR ACTUAL LOCATIONS.
2. REFER TO SUBSURFACE UTILITY ENGINEERING (SUE) DOCUMENTS SIGNED AND SEALED BY OTHERS UNDER SEPERATE CONTRACT FOR ADDITIONAL INFORMATION.
   SUE PROVIDED BY:
   AIA ENGINEERS, LTD
   15310 PARK ROW
   HOUSTON, TX 77084
   TEL 281-493-4140
   FAX 281-493-2211
3. SUE DOCUMENTS ONLY INCLUDE STORM SEWER LOCATIONS TO THE EXTENTS SHOWN.

KENNEDY CONSULTING
TBPE REGISTRATION NO. F-926

Texas Department of Transportation
© 2012

IH 35W FROM NORTH TARRANT PKWY TO IH 820

EXISTING UTILITY
STA 1562+00 TO STA 1574+00

SCALE 1" = 100' SHEET 17 OF 23

DESIGN	FED. RD. DIV. NO.	FEDERAL AID PROJECT NO.		HIGHWAY NO.
KCI	6	(SEE TITLE SHEET)		IH 35W
GRAPHICS KCI	STATE	DISTRICT	COUNTY	SHEET NO.
CHECK KCI	TEXAS	FTW	TARRANT	1332
CHECK KCI	CONTROL 0014	SECTION 16	JOB 255, ETC.	

FILENAME: S3B*EX-UTIL17*GTN.dgn

DRAWING DATE: 7/13/2012

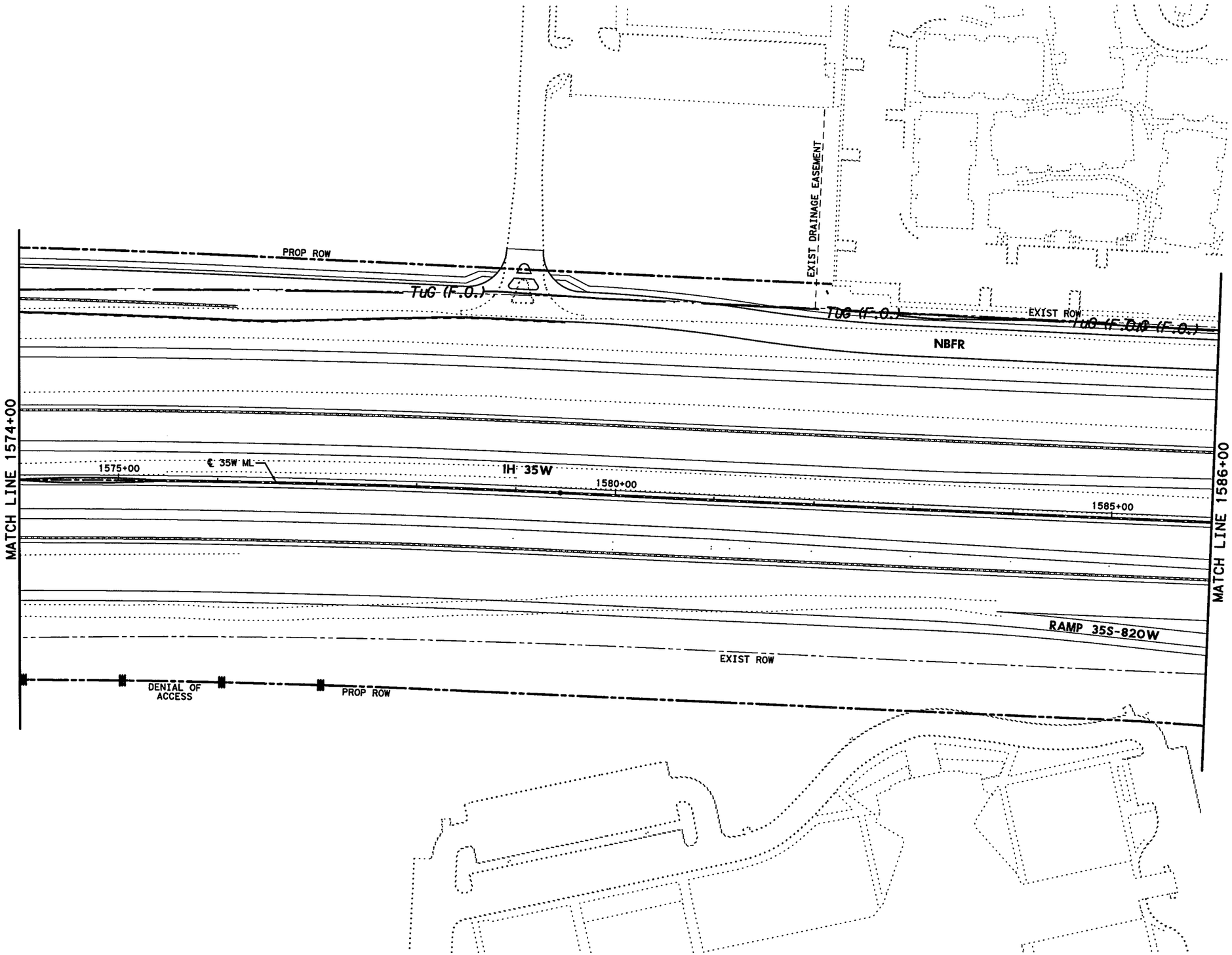

0′ 50′ 100′

SCALE IN FEET

LEGEND:

CATVuG	CABLE TV
EuG	ELECTRIC
FO	FIBER OPTIC
G	GAS
OE	OVERHEAD UTILITIES
STM	STORM
TuG	TELEPHONE
TC	TRAFFIC CONTROL
Unk	UNKNOWN
W	WATER
WW	WASTEWATER

NOTES:

1. UTILITIES SHOWN ARE APPROXIMATE AND ARE INTENDED FOR GENERAL INFORMATION ONLY. IT IS THE CONTRACTOR'S RESPONSIBILITY TO CONTACT ALL UTILITY OWNERS FOR ACTUAL LOCATIONS.
2. REFER TO SUBSURFACE UTILITY ENGINEERING (SUE) DOCUMENTS SIGNED AND SEALED BY OTHERS UNDER SEPERATE CONTRACT FOR ADDITIONAL INFORMATION.
   SUE PROVIDED BY:
   AIA ENGINEERS, LTD
   15310 PARK ROW
   HOUSTON, TX 77084
   TEL 281-493-4140
   FAX 281-493-2211
3. SUE DOCUMENTS ONLY INCLUDE STORM SEWER LOCATIONS TO THE EXTENTS SHOWN.

KENNEDY CONSULTING
TBPE REGISTRATION NO. F-926

Texas Department of Transportation
© 2012

IH 35W FROM NORTH TARRANT PKWY TO IH 820

EXISTING UTILITY
STA 1574+00 TO STA 1586+00

SCALE 1" = 100′ SHEET 18 OF 23

DESIGN	FED. RD. DIV. NO.	FEDERAL AID PROJECT NO.		HIGHWAY NO.
KCI	6	(SEE TITLE SHEET)		IH 35W
GRAPHICS	STATE	DISTRICT	COUNTY	SHEET NO.
KCI	TEXAS	FTW	TARRANT	1333
CHECK	CONTROL	SECTION	JOB	
KCI	0014	16	255, ETC.	

FILENAME: S3B*EX-UTIL18*GTN.dgn

DRAWING DATE: 7/13/2012

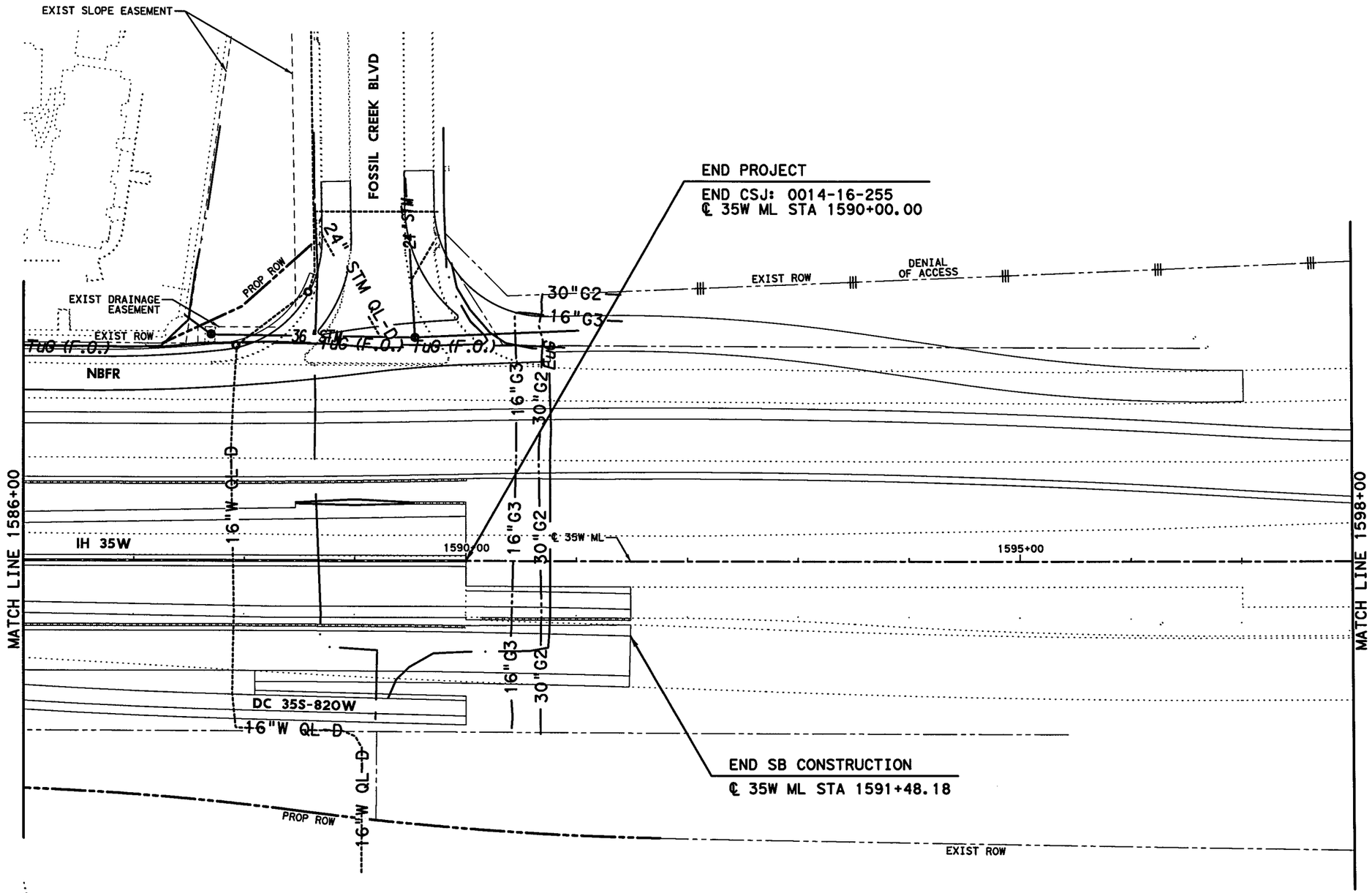

0' 50' 100'

SCALE IN FEET

LEGEND:

- CATVuG — CABLE TV
- EuG — ELECTRIC
- FO — FIBER OPTIC
- G — GAS
- OE — OVERHEAD UTILITIES
- STM — STORM
- TuG — TELEPHONE
- TC — TRAFFIC CONTROL
- Unk — UNKNOWN
- W — WATER
- WW — WASTEWATER

NOTES:

1. UTILITIES SHOWN ARE APPROXIMATE AND ARE INTENDED FOR GENERAL INFORMATION ONLY. IT IS THE CONTRACTOR'S RESPONSIBILITY TO CONTACT ALL UTILITY OWNERS FOR ACTUAL LOCATIONS.
2. REFER TO SUBSURFACE UTILITY ENGINEERING (SUE) DOCUMENTS SIGNED AND SEALED BY OTHERS UNDER SEPERATE CONTRACT FOR ADDITIONAL INFORMATION.
   SUE PROVIDED BY:
   AIA ENGINEERS, LTD
   15310 PARK ROW
   HOUSTON, TX 77084
   TEL 281-493-4140
   FAX 281-493-2211
3. SUE DOCUMENTS ONLY INCLUDE STORM SEWER LOCATIONS TO THE EXTENTS SHOWN.

KENNEDY CONSULTING
TBPE REGISTRATION NO. F-926

Texas Department of Transportation
© 2012

IH 35W FROM NORTH TARRANT PKWY TO IH 820

EXISTING UTILITY
STA 1586+00 TO STA 1598+00

SCALE 1" = 100' SHEET 19 OF 23

DESIGN	FED.RD. DIV.NO.	FEDERAL AID PROJECT NO.		HIGHWAY NO.
KCI	6	(SEE TITLE SHEET)		IH 35W
GRAPHICS	STATE	DISTRICT	COUNTY	SHEET NO.
KCI	TEXAS	FTW	TARRANT	1334
CHECK	CONTROL	SECTION	JOB	
KCI	0014	16	255, ETC.	

FILENAME: S3B*EX-UTIL19*GTN.dgn

DRAWING DATE: 7/13/2012

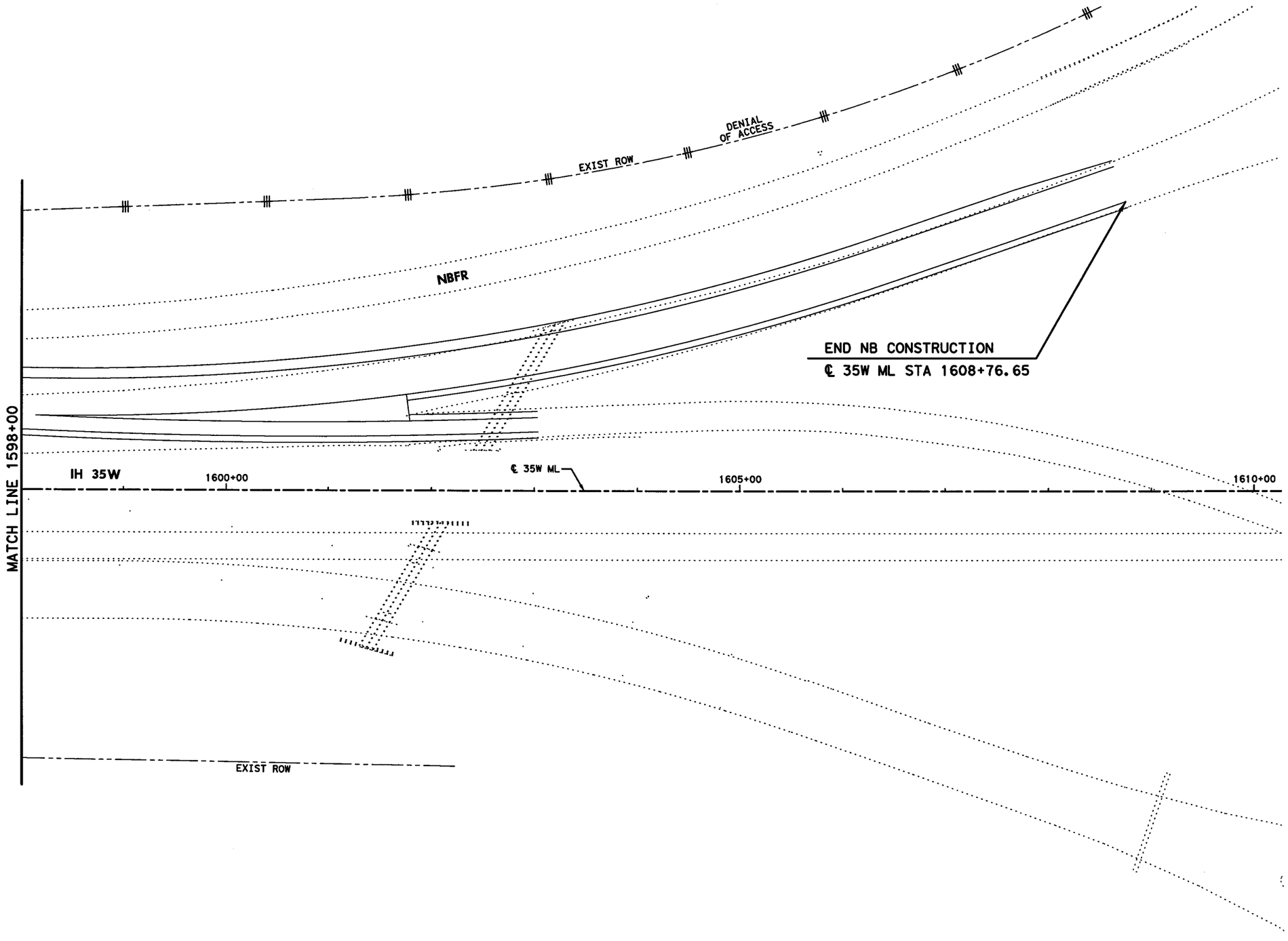

0′ 50′ 100′

SCALE IN FEET

LEGEND:

- CATVuG — CABLE TV
- EuG — ELECTRIC
- FO — FIBER OPTIC
- G — GAS
- OE — OVERHEAD UTILITIES
- STM — STORM
- TuG — TELEPHONE
- TC — TRAFFIC CONTROL
- Unk — UNKNOWN
- W — WATER
- WW — WASTEWATER

NOTES:

1. UTILITIES SHOWN ARE APPROXIMATE AND ARE INTENDED FOR GENERAL INFORMATION ONLY. IT IS THE CONTRACTOR'S RESPONSIBILITY TO CONTACT ALL UTILITY OWNERS FOR ACTUAL LOCATIONS.
2. REFER TO SUBSURFACE UTILITY ENGINEERING (SUE) DOCUMENTS SIGNED AND SEALED BY OTHERS UNDER SEPERATE CONTRACT FOR ADDITIONAL INFORMATION.
   SUE PROVIDED BY:
   AIA ENGINEERS, LTD
   15310 PARK ROW
   HOUSTON, TX 77084
   TEL 281-493-4140
   FAX 281-493-2211
3. SUE DOCUMENTS ONLY INCLUDE STORM SEWER LOCATIONS TO THE EXTENTS SHOWN.

KENNEDY CONSULTING
TBPE REGISTRATION NO. F-926

Texas Department of Transportation
© 2012

IH 35W FROM NORTH TARRANT PKWY TO IH 820

EXISTING UTILITY
STA 1598+00 TO END PROJECT

SCALE 1" = 100′ SHEET 20 OF 23

DESIGN	FED. RD. DIV. NO.	FEDERAL AID PROJECT NO.		HIGHWAY NO.
KCI	6	(SEE TITLE SHEET)		IH 35W
GRAPHICS	STATE	DISTRICT	COUNTY	SHEET NO.
KCI	TEXAS	FTW	TARRANT	1335
CHECK	CONTROL	SECTION	JOB	
KCI	0014	16	255, ETC.	

CHECK KCI

DRAWING DATE: 7/13/2012 FILENAME: S3B*EX-UTIL20*GTN.dgn

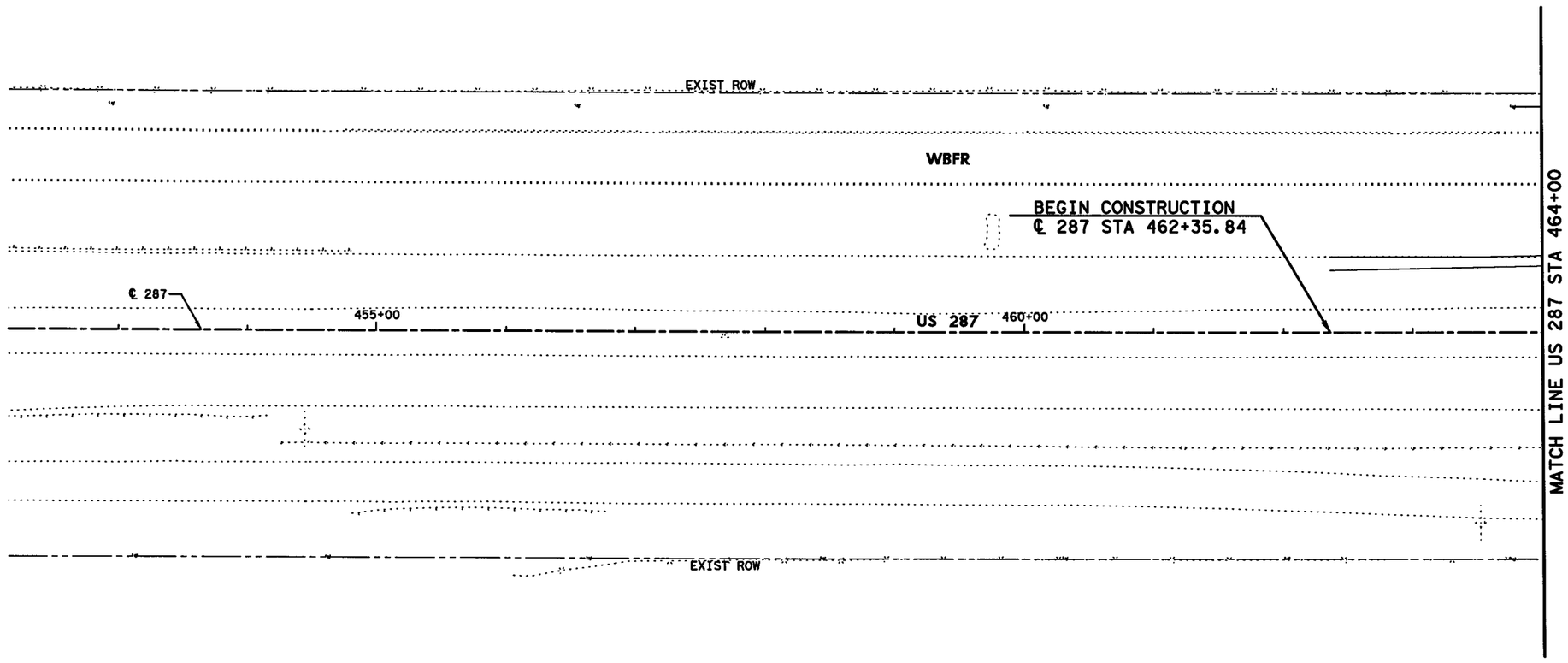

0' 50' 100'

SCALE IN FEET

LEGEND:

- CATVuG — CABLE TV
- EuG — ELECTRIC
- FO — FIBER OPTIC
- G — GAS
- OE — OVERHEAD UTILITIES
- STM — STORM
- TuG — TELEPHONE
- TC — TRAFFIC CONTROL
- Unk — UNKNOWN
- W — WATER
- WW — WASTEWATER

NOTES:

1. UTILITIES SHOWN ARE APPROXIMATE AND ARE INTENDED FOR GENERAL INFORMATION ONLY. IT IS THE CONTRACTOR'S RESPONSIBILITY TO CONTACT ALL UTILITY OWNERS FOR ACTUAL LOCATIONS.
2. REFER TO SUBSURFACE UTILITY ENGINEERING (SUE) DOCUMENTS SIGNED AND SEALED BY OTHERS UNDER SEPERATE CONTRACT FOR ADDITIONAL INFORMATION.
   SUE PROVIDED BY:
   AIA ENGINEERS, LTD
   15310 PARK ROW
   HOUSTON, TX 77084
   TEL 281-493-4140
   FAX 281-493-2211
3. SUE DOCUMENTS ONLY INCLUDE STORM SEWER LOCATIONS TO THE EXTENTS SHOWN.

KENNEDY CONSULTING
TBPE REGISTRATION NO. F-926

Texas Department of Transportation
© 2012

IH 35W FROM NORTH TARRANT PKWY TO IH 820

US 287

EXISTING UTILITY

BEGIN PROJECT TO STA 464+00

SCALE 1" = 100' SHEET 21 OF 23

DESIGN	FED. RD. DIV. NO.	FEDERAL AID PROJECT NO.		HIGHWAY NO.
KCI	6	(SEE TITLE SHEET)		IH 35W
GRAPHICS	STATE	DISTRICT	COUNTY	SHEET NO.
KCI	TEXAS	FTW	TARRANT	1336
CHECK	CONTROL	SECTION	JOB	
KCI	0014	16	255, ETC.	

CHECK KCI

DRAWING DATE: 7/13/2012 FILENAME: S3B*EX-UTIL21*GTN.dgn

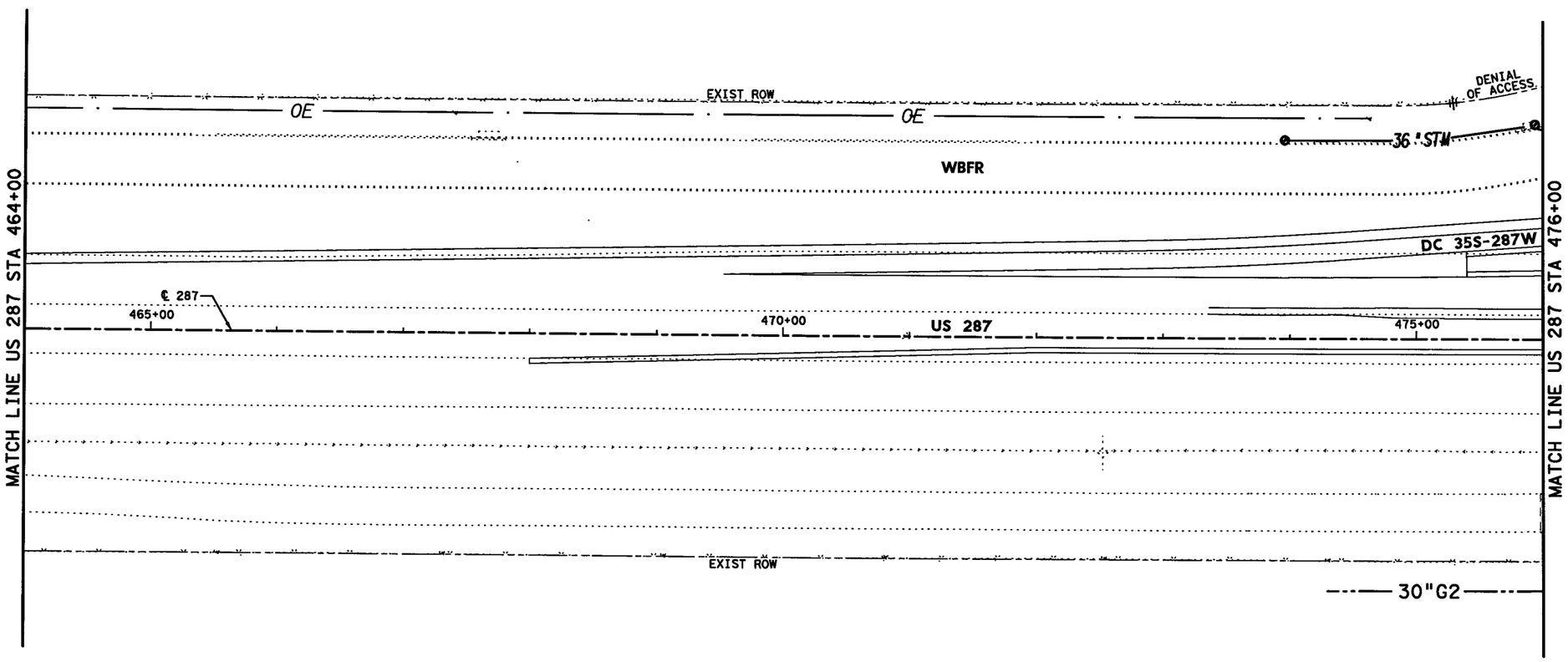

0' 50' 100'

SCALE IN FEET

LEGEND:

- CATVuG — CABLE TV
- EuG — ELECTRIC
- FO — FIBER OPTIC
- G — GAS
- OE — OVERHEAD UTILITIES
- STM — STORM
- TuG — TELEPHONE
- TC — TRAFFIC CONTROL
- Unk — UNKNOWN
- W — WATER
- WW — WASTEWATER

NOTES:

1. UTILITIES SHOWN ARE APPROXIMATE AND ARE INTENDED FOR GENERAL INFORMATION ONLY. IT IS THE CONTRACTOR'S RESPONSIBILITY TO CONTACT ALL UTILITY OWNERS FOR ACTUAL LOCATIONS.
2. REFER TO SUBSURFACE UTILITY ENGINEERING (SUE) DOCUMENTS SIGNED AND SEALED BY OTHERS UNDER SEPERATE CONTRACT FOR ADDITIONAL INFORMATION.
   SUE PROVIDED BY:
   AIA ENGINEERS, LTD
   15310 PARK ROW
   HOUSTON, TX 77084
   TEL 281-493-4140
   FAX 281-493-2211
3. SUE DOCUMENTS ONLY INCLUDE STORM SEWER LOCATIONS TO THE EXTENTS SHOWN.

KENNEDY CONSULTING
TBPE REGISTRATION NO. F-926

Texas Department of Transportation
© 2012

IH 35W FROM NORTH TARRANT PKWY TO IH 820

US 287

EXISTING UTILITY

STA 464+00 TO STA 476+00

SCALE 1" = 100' SHEET 22 OF 23

DESIGN	FED. RD. DIV. NO.	FEDERAL AID PROJECT NO.		HIGHWAY NO.
KCI	6	(SEE TITLE SHEET)		IH 35W
GRAPHICS	STATE	DISTRICT	COUNTY	SHEET NO.
KCI	TEXAS	FTW	TARRANT	
CHECK	CONTROL	SECTION	JOB	1337
KCI	0014	16	255, ETC.	

DRAWING DATE: 7/13/2012 FILENAME: S3B*EX-UTIL22*GTN.dgn

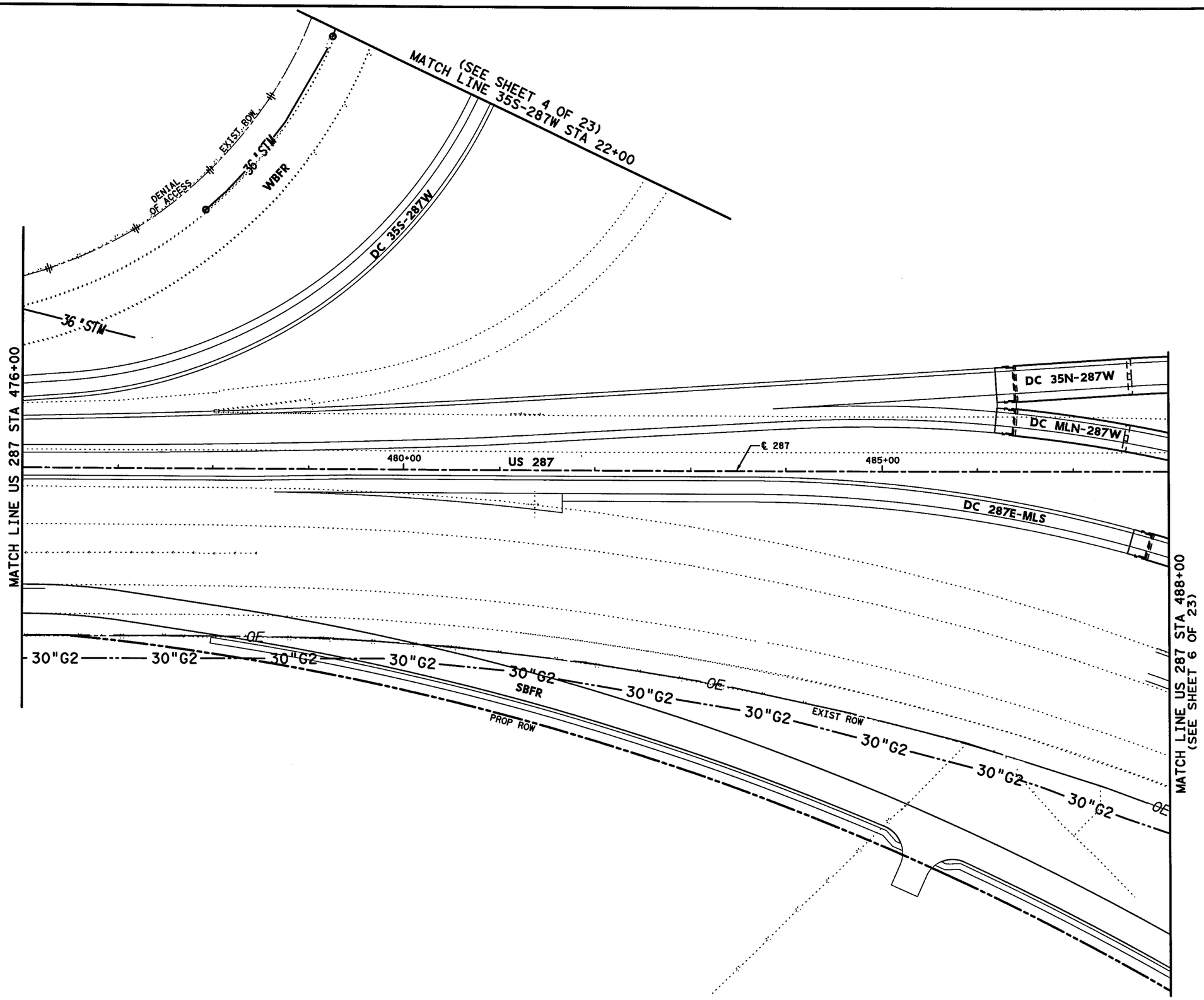

0' 50' 100'

SCALE IN FEET

LEGEND:

- CATVuG — CABLE TV
- EuG — ELECTRIC
- FO — FIBER OPTIC
- G — GAS
- OE — OVERHEAD UTILITIES
- STM — STORM
- TuG — TELEPHONE
- TC — TRAFFIC CONTROL
- Unk — UNKNOWN
- W — WATER
- WW — WASTEWATER

NOTES:

1. UTILITIES SHOWN ARE APPROXIMATE AND ARE INTENDED FOR GENERAL INFORMATION ONLY. IT IS THE CONTRACTOR'S RESPONSIBILITY TO CONTACT ALL UTILITY OWNERS FOR ACTUAL LOCATIONS.
2. REFER TO SUBSURFACE UTILITY ENGINEERING (SUE) DOCUMENTS SIGNED AND SEALED BY OTHERS UNDER SEPERATE CONTRACT FOR ADDITIONAL INFORMATION.
   SUE PROVIDED BY:
   AIA ENGINEERS, LTD
   15310 PARK ROW
   HOUSTON, TX 77084
   TEL 281-493-4140
   FAX 281-493-2211
3. SUE DOCUMENTS ONLY INCLUDE STORM SEWER LOCATIONS TO THE EXTENTS SHOWN.

KENNEDY CONSULTING
TBPE REGISTRATION NO. F-926

Texas Department of Transportation
© 2012

IH 35W FROM NORTH TARRANT PKWY TO IH 820

US 287

EXISTING UTILITY

STA 476+00 TO STA 488+00

SCALE 1" = 100' SHEET 23 OF 23

DESIGN	FED. RD. DIV. NO.	FEDERAL AID PROJECT NO.		HIGHWAY NO.
KCI	6	(SEE TITLE SHEET)		IH 35W
GRAPHICS KCI	STATE	DISTRICT	COUNTY	SHEET NO.
CHECK KCI	TEXAS	FTW	TARRANT	1338
CHECK KCI	CONTROL	SECTION	JOB	
	0014	16	255, ETC.	

DRAWING DATE: 7/13/2012 FILENAME: S3B*EX-UTIL23*GTN.dgn

WATER GENERAL NOTES

1. WATER SYSTEMS HAVE BEEN DESIGNED IN ACCORDANCE WITH THE "POLICY AND PROCEDURE FOR PROCESSING WATER AND SEWER DESIGN" DATED JUNE 1984,WITH THE LATEST REVISIONS, AS ESTABLISHED BY THE CITY OF FORT WORTH WATER DEPARTMENT FOR WATER AND SEWER PROJECTS.

2. APPLICABLE DESIGN AND DETAILS SHALL CONFORM TO PART E OF THE GENERAL CONTRACT DOCUMENTS AND SPECIFICATIONS FOR WATER DEPARTMENT PROJECTS, EFFECTIVE JULY 1, 1978, WITH LATEST REVISIONS.

3. EXISTING UTILITY DATA IS PROVIDED FOR INFORMATION ONLY. ALTHOUGH THIS DATA IS SHOWN AS ACCURATELY AS POSSIBLE, THE CONTRACTOR IS CAUTIONED THAT THE CITY AND THE ENGINEER NEITHER ASSUMES NOR IMPLIES ANY RESPONSIBILITY FOR THE ACCURACY OF THIS DATA.

4. THE CONTRACTOR IS TO VERIFY LOCATION AND ELEVATION OF EXISTING UTILITIES PRIOR TO CONSTRUCTION.

5. THE CONTRACTOR SHALL KEEP AT LEAST ONE LANE OF TRAFFIC OPEN AT ALL TIMES DURING CONSTRUCTION.

6. HORIZONTAL BLOCKING FOR WATER LINES HAS BEEN OMITTED FOR CLARITY, HOWEVER BLOCKING SHALL BE CONSTRUCTED IN ACCORDANCE WITH D130/28 OF 54.

7. TRENCHES WHICH LIE OUTSIDE EXISTING PAVEMENTS SHALL BE BACKFILLED ABOVE THE TOP OF THE EMBEDMENT WITH TYPE "C" BACKFILL MATERIAL WHEN TYPE "C" BACKFILL MATERIAL IS NOT SUITABLE AND AT THE DIRECTION OF THE ENGINEER, TYPE "B" MATERIAL SHALL BE USED. ALL BACKFILL MATERIAL SHALL BE COMPACTED TO A MINIMUM OF 95% PROCTOR DENSITY BY MEANS OF TAMPING ONLY. TRENCHES, WHICH CROSS UNDER EXISTING PAVEMENT, SHALL BE BACKFILLED PER FIG. "A" AND COMPACTED TO 95% OF STANDARD PROCTOR DENSITY AT A MOISTURE CONTENT OF -2% TO -4% OF OPTIMUM MOISTURE CONTENT.

8. TOP OF WATER LINES SHALL BE A MINIMUM OF 3'-6" BELOW TOP OF CURB EXCEPT WHERE SHOWN OTHERWISE IN THESE PLANS.

9. VALVES SHALL BE INSTALLED WHERE DESIGNATED ON THESE PLANS.

10. FIRE HYDRANTS SHALL BE A MINIMUM OF 3'-0" BEHIND THE FACE OF CURB AND IN LINE WITH PROPERTY/LOT LINES EXCEPT WHERE SHOWN OTHERWISE IN THESE PLANS.

11. INSERT CLEANING PIG IN WATER MAIN WHERE DIRECTED. "CLEANING PIG" SHALL BE PROVIDED BY CONTRACTOR.

12. INSTALL CHLORINATION AND SAMPLING POINTS AT DESIGNATED LOCATIONS PER D122/32 OF 54.

13. CORPORATION STOPS SHALL BE TESTED FOR FULL FLOW WHEN THE SYSTEM IS PRESSURE TESTED.

14. CONTRACTOR IS RESPONSIBLE FOR ALL TRENCH SAFETY. THE CONTRACTOR SHALL CONSTRUCT THE PROPOSED WORK UTILIZING A TRENCH SAFETY PLAN PREPARED BY A PROFESSIONAL ENGINEER FOR THIS PROJECT. A TRENCH SAFETY PLAN SHALL BE SUBMITTED AT THE PRE-CONSTRUCTION MEETING.

15. ALL WATER LINES CROSSING BELOW STORM SEWER LINES SHALL BE DUCTILE IRON PIPE UNLESS NOTED OTHERWISE.

16. ALL WATER SERVICES SHALL BE INSTALLED OVER STORM SEWERS, EXCEPT WHERE SHOWN OTHERWISE.

17. ELEVATION ADJUSTMENT AT CONNECTIONS MAY BE MADE WITH BENDS, OFFSETS, OR JOINT DEFLECTIONS (JOINT DEFLECTIONS NOT TO EXCEED MANUFACTURE'S RECOMMENDATIONS OR AS DEEMED APPROPRIATE BY THE ENGINEER).

18. ALL NON-STANDARD BENDS SHALL BE MADE BY USING THE CLOSEST STANDARD MJ FITTINGS OR FITTINGS WITH THE REQUIRED JOINT DEFLECTIONS(DEFLECTION NOT TO EXCEED THE MANUFACTURER'S RECOMMENDED DEFLECTION PER JOINT).

19. ALL EXISTING 3/4-INCH WATER SERVICE LINES SHALL BE REPLACED WITH 1-INCH TYPE K COPPER SERVICE LINES, WITH 1-INCH CORPORATION STOPS AND IF REQUIRED 1-INCH TAPPING SADDLE AND 1-INCH X 3/4-INCH REDUCER AT THE 3/4-INCH CURB STOP AS DIRECTED BY THE ENGINEER.

20. ALL EXISTING WATER METERS SHALL BE RELOCATED 3' BEHIND CURB OR AS DIRECTED BY THE ENGINEER.

21. EXISTING UTILITY CROSSING SHOWN ON PROFILE ARE FROM REFERENCE PLANS, AND FROM INFORMATION OBTAINED FROM THE UTILITY COMPANIES. IT SHALL BE THE CONTRACTOR'S RESPONSIBILITY TO FIELD-VERIFY THE HORIZONTAL AND VERTICAL LOCATIONS OF THE EXISTING UTILITIES.

22. THE CONTRACTOR SHALL INSTALL A 2" TEMPORARY WATER SERVICE MAIN.

23. THE CONTRACTOR PERSONNEL SHALL WEAR IDENTIFYING CLOTHING OR HATS AT ALL TIMES. THE CONTRACTOR SHALL ALSO HAVE IDENTIFICATION ON ALL VEHICLES.

24. CONSTRUCTION ACTIVITIES SHALL BE LIMITED TO THE HOURS OF 7:00 AM TO 6:00 PM UNLESS OTHERWISE APPROVED OR DIRECTED BY THE ENGINEER. IN THE CASE OF ARTERIAL STREETS, 9:00 AM TO 4:00 PM ONLY.

25. CONTRACTOR IS RESPONSIBLE FOR MAINTAINING WATER AND SEWER CONNECTIONS TO ALL HOMES AND BUSINESSES IN WORKING ORDER AT ALL TIMES, EXCEPT FOR BRIEF PRE-NOTIFIED INTERRUPTIONS IN WATER SERVICES. IN NO CASE SHALL SERVICES BE ALLOWED TO REMAIN UNREINSTATED OVERNIGHT.

26. THE CONTRACTOR SHALL SAW CUT EXISTING CURB AND GUTTER PAVEMENT, DRIVEWAYS AND SIDEWALKS IN AREAS WHERE PAVEMENT OR CONCRETE IS TO BE REMOVED. SAW CUTTING WILL BE CONSIDERED SUBSIDIARY TO THE PRICE PER LINEAR FOOT OF PIPE. CONTRACTOR SHALL PROVIDE COMPACTED SELECT MATERIAL AS NEEDED TO REPAIR DAMAGED DRIVES, STREETS, WALKS AND PATIOS.

27. THE CONTRACTOR SHALL REMOVE ALL FENCES, LOCATED WITHIN EASEMENTS AND PARKWAY, INTERFERING WITH CONSTRUCTION OPERATIONS AND PROVIDE TEMPORARY FENCING DURING CONSTRUCTION. REMOVED FENCES, WOODEN OR CHAIN LINK, SHALL BE REPLACED WITH A NEW FENCE OR UNDAMAGED ORIGINAL FENCING. ALL AFFECTED PROPERTY OWNERS SHALL BE NOTIFIED PRIOR TO CONSTRUCTION. REMOVAL AND REPLACEMENT OF EXISTING AND TEMPORARY FENCES SHALL BE CONSIDERED SUBSIDIARY TO THE PROJECT COST AND MUST BE REFLECTED IN THE UNIT BID PRICES FOR VARIOUS ITEMS LISTED IN THE PROPOSAL.

28. THE CONTRACTOR IS RESPONSIBLE FOR KEEPING STREETS AND SIDEWALKS ADJACENT TO THE PROJECT FREE OF MUD AND DEBRIS ARISING FROM THE CONSTRUCTION ACTIVITY.

29. ALL BARRICADES, WARNING SIGNS, LIGHT DEVICES, ETC. FOR THE GUIDANCE AND PROTECTION OF TRAFFIC AND PEDESTRIANS MUST CONFORM TO THE INSTALLATION SHOWN IN THE 1980 TEXAS MANUAL OF UNIFORM TRAFFIC CONTROL DEVICES AS CURRENTLY AMENDED, TEXAS STATE DEPARTMENT OF HIGHWAYS AND PUBLIC TRANSPORTATION.

Kimley-Horn and Associates, Inc.
TEXAS REGISTERED ENGINEERING FIRM F-928

Texas Department of Transportation
© 2012

IH 35W FROM NORTH TARRANT PKWY TO IH 820

IH 35W UTILITY RELOCATIONS

WATER GENERAL NOTES

SHEET 1 OF 54

DESIGN	FED.RD. DIV.NO.	FEDERAL AID PROJECT NO.		HIGHWAY NO.
KHA	6	(SEE TITLE SHEET)		IH 35W
GRAPHICS KHA	STATE	DISTRICT	COUNTY	SHEET NO.
CHECK KHA	TEXAS	FTW	TARRANT	1339
CHECK KHA	CONTROL 0014	SECTION 16	JOB 255, ETC.	

FILENAME: S3BPUTIL*NOTES01.dgn

DRAWING DATE: 7/13/2012

WASTEWATER GENERAL NOTES

1. THE CONTRACTOR SHALL FURNISH A TRAFFIC CONTROL PLAN, FOR ALL WORKING AREAS, TO THE CITY TRAFFIC ENGINEER FOR APPROVAL PRIOR TO THE PRE-CONSTRUCTION MEETING. TWO-WAY TRAFFIC MUST BE MAINTAINED AT ALL TIMES. ONE LANE OF TRAVEL AROUND CONSTRUCTION OPERATIONS IN PROGRESS WITH ADEQUATE SAFEGUARDS WILL BE ACCEPTABLE ON MINOR STREETS ONLY. ALL BARRICADES, WARNING SIGNS, LIGHT DEVICES, AND ETC., FOR THE GUIDANCE AND PROTECTION OF TRAFFIC AND PEDESTRIANS, MUST CONFORM TO THE INSTALLATION SHOWN IN THE 1980 TEXAS MANUAL ON UNIFORM TRAFFIC CONTROL DEVICES, AS CURRENTLY AMENDED, TEXAS DEPARTMENT OF TRANSPORTATION. THE COST FOR TRAFFIC CONTROL SHALL BE SUBSIDIARY TO THE UNIT PRICES FOR THIS PROJECT.

2. CONTRACTOR IS RESPONSIBLE FOR ALL TRENCH SAFETY. THE CONTRACTOR SHALL CONSTRUCT THE PROPOSED WORK UTILIZING A TRENCH SAFETY PLAN, PREPARED BY A PROFESSIONAL ENGINEER FOR THIS PROJECT. A TRENCH SAFETY PLAN SHALL BE SUBMITTED AT THE PRE-CONSTRUCTION MEETING.

3. ALL WORK SHALL BE PERFORMED IN ACCORDANCE WITH CITY OF FORT WORTH WATER DEPARTMENT STANDARD SPECIFICATIONS AND DETAILS, EXCEPT WHERE MODIFIED IN THESE PLANS OR IN THE SPECIAL CONDITIONS OF THE CONTRACT DOCUMENTS.

4. THE CONTRACTOR SHALL DISTRIBUTE LETTERS TO ALL AFFECTED PROPERTY OWNERS PRIOR TO BEGINNING WORK ON EACH PROPERTY. THE LETTER SHALL INCLUDE NAMES AND TELEPHONE NUMBERS OF CONTRACTOR CONTACTS, A DESCRIPTION OF THE WORK TO BE DONE, AND THE TIME FRAME FOR DOING THE WORK. COPIES OF THE LETTER SHALL BE FORWARDED TO THE CITY INSPECTOR. THE CONTRACTOR SHALL NOTIFY RESIDENTS 48 HOURS IN ADVANCE OF PERFORMING ANY WORK ON PRIVATE PROPERTY. DISTRIBUTION OF LETTERS SHALL BE CONSIDERED AS SUBSIDIARY TO THE COST OF PROJECT AND NO ADDITIONAL COMPENSATION WILL BE ALLOWED.

5. CONTRACTOR SHALL BE RESPONSIBLE FOR MAINTAINING GENERAL SAFETY AT AND ADJACENT TO THE PROJECT AREA, INCLUDING THE PERSONAL SAFETY OF THE CONSTRUCTION CREW AND GENERAL PUBLIC AND THE SAFETY OF PUBLIC AND PRIVATE PROPERTY. CONTRACTOR SHALL PROVIDE TEMPORARY SANITARY SEWER FACILITIES TO AFFECTED PROPERTY OWNERS, IF NECESSARY. NOT A SEPARATE PAY ITEM.

6. WHEN IT IS REQUIRED THAT A CONTRACTOR WORK IN PRIVATE PROPERTY, THE CONTRACTOR SHALL CONTACT THE PROPERTY OWNER 48 HOURS PRIOR TO CONSTRUCTION. ONCE THE PIPE HAS BEEN INSTALLED OR REHABILITATED, THE CONTRACTOR SHALL IMMEDIATELY COMMENCE SURFACE RESTORATION. SURFACE RESTORATION MUST BE COMPLETED TO THE OWNER'S SATISFACTION WITHIN TEN (10) WORKING DAYS. FAILURE TO MAINTAIN SITE RESTORATION, AS NOTED ABOVE, MAY RESULT IN DEFERMENT OF FURTHER PIPE INSTALLATION ACTIVITIES.

7. THE CONTRACTOR SHALL VIDEO ALL POTENTIALLY IMPACTED PRIVATE PROPERTY AREAS PRIOR TO WORK. VIDEOS SHALL INCLUDE DATE NOTATION AND AUDIO IDENTIFICATION OF PROPERTY ADDRESS AND MAIN/LATERAL NAME. THIS PRE-CONSTRUCTION VIDEO TAPING OF IMPACTED PROPERTIES SHALL BE CONSIDERED SUBSIDIARY WORK.

8. CONTRACTOR'S PERSONNEL SHALL HAVE IDENTIFYING CLOTHING OR HATS AT ALL TIMES. THE CONTRACTOR SHALL ALSO HAVE IDENTIFICATION ON ALL VEHICLES.

9. CONSTRUCTION ACTIVITIES SHALL BE LIMITED TO THE HOURS OF 7:00 A.M. TO 6:00 P.M. UNLESS APPROVED OR DIRECTED BY THE ENGINEER.

10. THE LOCATION OF ALL SANITARY SEWER, WATER, STORM SEWER, TELEPHONE, GAS, ELECTRIC, CABLE TELEVISION UTILITIES, DRIVEWAYS, RETAINING WALLS, STRUCTURES, ETC., WHICH MAY BE SHOWN ON THESE PLANS ARE APPROXIMATE. THE CONTRACTOR SHALL VERIFY THE EXACT SIZE, LOCATION, ELEVATION, AND CONFIGURATION OF ALL UTILITIES AND STRUCTURES PRIOR TO CONSTRUCTION. CONTRACTOR SHALL COORDINATE WITH APPROPRIATE UTILITY COMPANIES AND PROPERTY OWNERS TO MARK AND LOCATE ALL UNDERGROUND FACILITIES PRIOR TO CONSTRUCTION. SUCH VERIFICATION SHALL BE CONSIDERED AS SUBSIDIARY TO THE COST OF PROJECT AND NO ADDITIONAL COMPENSATION WILL BE ALLOWED.

11. EXISTING VERTICAL DEFLECTIONS AND PIPE SLOPES SHOWN ON THE PLANS WERE OBTAINED FROM RECORD DRAWINGS AND HAVE NOT BEEN FIELD VERIFIED. SOME PIPE SLOPES WERE ADJUSTED TO MATCH SURVEYED MANHOLE FLOW LINES. RIM ELEVATIONS, FLOW LINES AND HORIZONTAL LOCATIONS OF EXISTING MANHOLES WERE DETERMINED FROM FIELD SURVEY.

12. THE PROPOSED SANITARY SEWER LINES AT TIMES WILL BE LAID CLOSE TO OTHER EXISTING UTILITIES AND STRUCTURES BOTH ABOVE AND BELOW GROUND. THE CONTRACTOR SHALL MAKE NECESSARY PROVISIONS FOR THE SUPPORT AND PROTECTION OF ALL UTILITY POLES, GAS MAINS, TELEPHONE CABLES, SANITARY SEWER LINES, WATER LINES, TU CABLES, DRAINAGE PIPES, UTILITY SERVICES, AND ALL OTHER UTILITIES AND STRUCTURES BOTH ABOVE AND BELOW GROUND DURING CONSTRUCTION. THE CONTRACTOR IS LIABLE FOR ALL DAMAGES DONE TO SUCH EXISTING FACILITIES AS A RESULT OF THE CONTRACTOR'S OPERATIONS.

13. CONTRACTOR SHALL CONDUCT A PRE-CONSTRUCTION TELEVISION INSPECTION OF ALL EXISTING SANITARY SEWER LINES, WHICH ARE TO BE ABANDONED OR REHABILITATED VIA TRENCHLESS METHODS, TO VERIFY LOCATIONS OF ALL SEWER SERVICE CONNECTIONS PRIOR TO CONSTRUCTION OF ENTIRE PROJECT.

14. CONTRACTOR SHALL ENSURE THAT ALL ACTIVE SERVICES CAN BE RECONNECTED AND/OR REROUTED TO NEW SEWER MAIN/LATERAL. CONTRACTOR SHALL NOTIFY THE CITY OF ANY POTENTIAL CONFLICTS PRIOR TO CONSTRUCTION SO MODIFICATIONS TO THE PLANS CAN BE MADE IF NECESSARY. NOT A SEPARATE PAY ITEM, THIS WORK SHALL BE SUBSIDIARY TO PRE-CONSTRUCTION TELEVISION INSPECTION OF SANITARY SEWER LINES.

15. CONTRACTOR SHALL VERIFY THAT ALL CONNECTIONS TO THE SANITARY SEWER SYSTEM ARE FOR SANITARY SEWER ONLY. CONTRACTOR SHALL NOTIFY CITY OF ALL KNOWN ILLICIT CONNECTIONS.

16. CONTRACTOR IS RESPONSIBLE FOR MAINTAINING WATER AND SEWER CONNECTIONS TO ALL HOMES AND BUSINESSES IN WORKING ORDER AT ALL TIMES, EXCEPT FOR BRIEF INTERRUPTIONS IN SERVICE FOR SEWER SERVICES TO BE REINSTALLED. IN NO CASE SHALL SERVICES BE ALLOWED TO REMAIN OUT OF SERVICE OVERNIGHT.

17. THE CONTRACTOR SHALL BE LIABLE FOR ALL DAMAGES TO PROPERTIES, HOMES, AND BASEMENTS FROM BACKUP, WHICH MAY RESULT DURING THE INSTALLATION OF THE NEW PIPE AND/OR ABANDONMENT OF EXISTING PIPE. THE CONTRACTOR WILL BE ALLOWED TO OPEN CLEAN OUTS WHERE AVAILABLE. THE CONTRACTOR WILL BE RESPONSIBLE FOR ALL CLEAN UP ASSOCIATED WITH OPENING CLEAN OUTS.

18. THE CONTRACTOR SHALL PRESERVE AND PROTECT OR REMOVE AND REPLACE (WITH PRIOR APPROVAL OF CITY PARKS AND COMMUNITY SERVICES AND/OR AFFECTED PROPERTY OWNERS) ALL TREES, SHRUBS, HEDGES, RETAINING WALLS, LANDSCAPING, BUILDINGS, WALKS, ETC., IN OR NEAR PROPOSED CONSTRUCTION AREA. THIS WORK SHALL BE CONSIDERED INCIDENTAL AND NOT A SEPARATE PAY ITEM.

19. THE CONTRACTOR SHALL REMOVE ALL FENCES, LOCATED WITHIN EASEMENTS, INTERFERING WITH CONSTRUCTION OPERATION AND PROVIDE TEMPORARY FENCING DURING CONSTRUCTION. REMOVED FENCES, WOODEN OR CHAIN LINK, SHALL BE REPLACED WITH A NEW FENCE OR UNDAMAGED ORIGINAL FENCING. ALL AFFECTED PROPERTY OWNERS SHALL BE NOTIFIED PRIOR TO CONSTRUCTION. REMOVAL AND REPLACEMENT OF EXISTING AND TEMPORARY FENCES SHALL BE CONSIDERED SUBSIDIARY TO THE PROJECT COST AND REFLECTED IN THE UNIT BID PRICES FOR VARIOUS ITEMS LISTED IN THE PROPOSAL.

20. CONTRACTOR SHALL SAWCUT EXISTING CURB AND GUTTER, PAVEMENT, DRIVEWAYS, AND SIDEWALKS AT AREAS WHERE PAVEMENT OR CONCRETE IS TO BE REMOVED. SAWCUTS WILL BE CONSIDERED SUBSIDIARY TO THE PRICE BID FOR LINEAR FEET OF SANITARY SEWER.

21. CONTRACTOR SHALL PROTECT CONCRETE CURB AND GUTTER, DRIVEWAYS, AND SIDEWALKS THAT ARE NOT DESIGNATED FOR REMOVAL. REMOVAL AND REPLACEMENT OF THESE ITEMS SHALL BE AS DESIGNATED. AT LOCATIONS WHERE THE CURB AND GUTTER ARE TO BE REPLACED, THE CONTRACTOR SHALL ASSUME ALL RESPONSIBILITY FOR THE RE-ESTABLISHMENT OF EXISTING STREET AND GUTTER GRADES. ESTABLISHMENT OF GRADES SHALL BE PERFORMED PRIOR TO CONSTRUCTION AND IS NOT A SEPARATE PAY ITEM, BUT SHALL BE CONSIDERED INCIDENTAL TO THE PROJECT PRICE.

22. ALL EMBEDMENT SHALL BE IN ACCORDANCE WITH CITY OF FORT WORTH WATER DEPARTMENT SPECIFICATION 33 05 10. ALL PAVEMENT REPAIR SHALL BE PER CITY OF FORT WORTH TRANSPORTATION AND PUBLIC WORKS PAVEMENT REPAIR FIGURES ON SHEET 33 AND 42 OF 54.

23. ALL DRIVEWAYS, WHICH ARE OPEN CUT, SHALL HAVE AT LEAST A TEMPORARY RIDING SURFACE AT THE END OF EACH DAY. THE TEMPORARY SURFACE WILL BE CONSIDERED A NON-PAY ITEM.

24. CONTRACTOR SHALL BYPASS PUMP SEWAGE AROUND SECTIONS OF PIPE PRIOR TO BEING REPLACED OR REHABILITATED. NOT A SEPARATE PAY ITEM. PAYMENT SHALL BE INCIDENTAL TO REPLACEMENT OF SEWER.

25. NEW MANHOLES SHALL BE CONSTRUCTED SUCH THAT THE MANHOLE COVER IS AT FINISHED SURFACE GRADE, OR AS NOTED ON THE PLANS. CONCRETE COLLARS AND WATERTIGHT MANHOLE INSERTS SHALL BE PROVIDED WITH ALL NEW MANHOLES, AS REQUIRED FOR THIS PROJECT.

26. THE CONTRACTOR IS RESPONSIBLE FOR KEEPING STREETS AND SIDEWALKS ADJACENT TO PROJECT FREE OF MUD AND DEBRIS FROM THE CONSTRUCTION.

27. THE CONTRACTOR SHALL CLEANUP AND RESTORE THE AREA OF OPERATIONS TO A CONDITION AS GOOD AS OR BETTER THAN THAT WHICH EXISTED PRIOR TO REPLACEMENT OR REHABILITATION OF THE PIPE.

28. THE CONTRACTOR SHALL REMOVE FROM THE PROJECT AREA ALL SURPLUS MATERIAL. THIS SHALL BE INCIDENTAL AND NOT A SEPARATE PAY ITEM. SURPLUS MATERIALS FROM EXCAVATION INCLUDING DIRT, TRASH, ETC. SHALL BE PROPERLY DISPOSED OF AT A SITE ACCEPTABLE TO THE CITY'S FLOOD PLAIN ADMINISTRATOR IF WITHIN THE CITY LIMITS. IF THE LOCATION IS NOT WITHIN THE CITY LIMITS, THE CONTRACTOR SHALL PROVIDE A LETTER STATING SO. NO EXCESS EXCAVATED MATERIAL SHALL BE DEPOSITED IN LOW AREAS OR ALONG NATURAL DRAINAGE WAY WITHOUT WRITTEN PERMISSION FROM THE AFFECTED PROPERTY OWNER AND THE CITY'S FLOOD PLAIN ADMINISTRATOR. IF THE CONTRACTOR PLACES EXCESS MATERIAL IN THE AREAS WITHOUT WRITTEN PERMISSION, HE WILL BE RESPONSIBLE FOR ALL DAMAGE RESULTING FROM SUCH FILL AND HE SHALL REMOVE THE MATERIAL AT HIS OWN COST.

STATE OF TEXAS
RYAN D. OWEN
109586
LICENSED
PROFESSIONAL ENGINEER
7/13/2012

Kimley-Horn and Associates, Inc.
TEXAS REGISTERED ENGINEERING FIRM F-928

Texas Department of Transportation
© 2012

IH 35W FROM NORTH TARRANT PKWY TO IH 820

IH 35W UTILITY RELOCATIONS
WASTEWATER GENERAL NOTES

SHEET 2 OF 54

DESIGN	FED. RD. DIV. NO.	FEDERAL AID PROJECT NO.		HIGHWAY NO.
KHA	6	(SEE TITLE SHEET)		IH 35W
GRAPHICS	STATE	DISTRICT	COUNTY	SHEET NO.
KHA	TEXAS	FTW	TARRANT	1340
CHECK	CONTROL	SECTION	JOB	
KHA	0014	16	255, ETC.	

DRAWING DATE: 7/13/2012 FILENAME: S3BPUTIL*NOTES02.dgn

PROJECT SPECIFIC NOTES

1. THESE PROJECT SPECIFIC NOTES TAKE PRECEDENCE OVER THE WATER GENERAL NOTES AND THE SEWER GENERAL NOTES ALSO SHOWN IN THESE PLANS. IN THE EVENT OF A CONFLICT BETWEEN THE WATER AND/OR SEWER GENERAL NOTES AND THESE PROJECT SPECIFIC NOTES, THE PROJECT SPECIFIC NOTES SHALL OVERRIDE THE WATER AND/OR SEWER GENERAL NOTES.

2. THE CONTRACTOR SHALL BE RESPONSIBLE FOR LOCATING ALL UTILITIES, WHETHER PUBLIC OR PRIVATE, PRIOR TO EXCAVATION. THE INFORMATION AND DATA SHOWN WITH RESPECT TO EXISTING UNDERGROUND FACILITIES AT OR CONTIGUOUS TO THE SITE IS APPROXIMATE AND BASED ON INFORMATION FURNISHED BY THE OWNERS OF SUCH UNDERGROUND FACILITIES OR ON PHYSICAL APPURTENANCES OBSERVED IN THE FIELD. THE OWNER AND ENGINEER SHALL NOT BE RESPONSIBLE FOR THE ACCURACY OR COMPLETENESS OF ANY SUCH INFORMATION OR DATA. THE CONTRACTOR SHALL HAVE FULL RESPONSIBILITY FOR REVIEWING AND CHECKING ALL SUCH INFORMATION AND DATA, FOR LOCATING ALL UNDERGROUND FACILITIES, FOR COORDINATION OF THE WORK WITH THE OWNERS OF SUCH UNDERGROUND FACILITIES DURING CONSTRUCTION, AND FOR THE SAFETY AND PROTECTION THEREOF AND REPAIRING ANY DAMAGE THERETO RESULTING FROM THE WORK. THE COST WILL BE CONSIDERED SUBSIDIARY TO THE CONTRACT UNIT PRICE OF THE PIPE. THE CONTRACTOR SHALL NOTIFY ANY AFFECTED UTILITY COMPANIES OR AGENCIES IN WRITING AT LEAST 48 HOURS PRIOR TO CONSTRUCTION.

   A. NOTIFY DIGTESS (1-800-344-8377) TO LOCATE EXISTING UTILITIES PRIOR TO CONSTRUCTION.

   B. THE CONTRACTOR SHALL NOTIFY THE CITY OF FORT WORTH PROJECT MANAGER 48 HOURS PRIOR TO THE START OF ANY CONSTRUCTION (JOHN KASAVICH: 817-392-8480).

   C. CAUTION! BURIED UTILITY LINES EXIST ALONG THIS PROJECT. CONTACT UTILITY OWNERS 48 HOURS PRIOR TO EXCAVATION.

      (1). SEE CONTACT LIST THIS SHEET

3. THE CONTRACTOR SHALL RE-ESTABLISH ANY PROPERTY MARKER, BENCHMARK, ETC. DISTURBED DURING CONSTRUCTION TO ITS ORIGINAL LOCATION.

4. THE CONTRACTOR SHALL BE RESPONSIBLE FOR MAINTAINING ACCURATE VERTICAL AND HORIZONTAL CONTROL THROUGHOUT THE PROJECT.

5. ONLY THOSE ITEMS LISTED IN THE BID FORM WILL BE MEASURED AND PAID FOR AT THE UNIT PRICE. ALL OTHER WORK WILL BE CONSIDERED SUBSIDIARY AND WILL BE INCLUDED IN THE UNIT PRICE FOR THE VARIOUS BID ITEMS.

6. THE CONTRACTOR SHALL COMPLY WITH OSHA REGULATIONS AND STATE OF TEXAS LAWS CONCERNING EXCAVATION, EMISSIONS, TRENCHING, SHORING, AND SITE SAFETY.

7. THE CONTRACTOR IS REQUIRED TO PROVIDE THRUST RESTRAINT BY MEANS OF RESTRAINING JOINTS AND CONCRETE BLOCKING. EACH METHOD SHALL BE CAPABLE OF THRUST RESTRAINT INDEPENDENT OF THE OTHER SYSTEM. THE CONTRACTOR SHALL REFER TO DETAIL D130/28 OF 54. FOR 4" AND LARGER WATER LINES, HORIZONTAL JOINT RESTRAINT SHALL BE AS SHOWN IN DETAIL D130/28 OF 54. VALVES SHALL BE CALCULATED AS DEADENDS. FOR THIS PROJECT, 12-INCH AND SMALLER WATER PIPE IS NOT REQUIRED TO BE RESTRAINED BY BELL AND SPIGOT WITH RESTRAINED HARNESSES. 12-INCH AND SMALLER FITTINGS AND VALVES SHALL BE RESTRAINED WITH MEGALUGS AND THRUST BLOCKING PER DETAIL D130/28 OF 54, D131/28 OF 54, AND WTR-0011B/28 OF 54.

8. PROPOSED 6", 8", 12" AND 16" DIAMETER WATER LINES SHALL HAVE A MINIMUM OF 48 INCHES COVER ABOVE THE TOP OF PIPE. PROPOSED 24" AND LARGER DIAMETER WATER LINE SHALL HAVE A MINIMUM OF 60 INCHES COVER ABOVE TOP OF PIPE.

9. WHERE THE CONTRACTOR DESIRES TO MOVE EQUIPMENT NOT LICENSED FOR OPERATION ON PUBLIC HIGHWAYS ON OR ACROSS ANY PAVEMENT, HE SHALL PROTECT THE PAVEMENT FROM ALL DAMAGE.

10. PURGING AND STERILIZATION OF THE WATER LINE, IN ACCORDANCE WITH SPECIAL CONDITIONS 33 04 40 "CLEANING AND ACCEPTANCE TESTING OF WATER MAINS", SHALL BE THE RESPONSIBILITY OF THE CONTRACTOR.

11. POSITIVE DRAINAGE MUST BE REESTABLISHED FOR ALL DRAINAGE SWALES AND CULVERTS AFFECTED BY THE CONSTRUCTION OPERATIONS. THE COST OF THIS WORK SHALL BE SUBSIDIARY TO THE VARIOUS ITEMS LISTED IN THE PROPOSAL.

12. THE CONTRACTOR SHALL NOT PLACE FILL OR WASTE MATERIAL ON ANY PRIVATE PROPERTY WITHOUT PRIOR WRITTEN AGREEMENT WITH PROPERTY OWNER.

13. DAMAGE TO ANY EXISTING CULVERT OR CULVERT HEADWALL SHALL BE REPLACED AT THE EXPENSE OF THE CONTRACTOR.

14. ALL WATER LINES ARE DIMENSIONED OFF THE R.O.W. LINE, UNLESS OTHERWISE NOTED.

15. CONTRACTOR SHALL BE RESPONSIBLE FOR VERIFYING THAT ALL EXISTING WATER SERVICES ARE RESTORED TO A FULLY FUNCTIONAL UNIT OPERATING IN CONJUNCTION WITH THE PROPOSED WATER LINES.

16. ALL VALVES 16" AND LARGER SHALL BE PLACED IN A VALVE VAULT IN ACCORDANCE WITH CITY OF FORT WORTH DESIGN STANDARDS.

17. THE CONTRACTOR SHALL BE RESPONSIBLE FOR OBTAINING A STORAGE AREA. THE STORAGE AREA MUST BE SECURED BY FENCING OR SOME OTHER METHOD THAT DOES NOT ALLOW ACCESS TO THE STORED PIPE MATERIAL, FITTINGS OR APPURTENANCES. MATERIALS SHALL BE STORED SO THAT THE STORAGE AREA REMAINS CLEAN AND FREE FROM DEBRIS.

18. THE CONTRACTOR IS RESPONSIBLE FOR SECURING THE CONSTRUCTION AREA AT THE END OF EACH DAY. ANY EXCAVATION SHALL BE FILLED OR COVERED WITH STEEL PLATES.

19. THE CONTRACTOR WILL NOT BE ALLOWED TO PLACE ANY EXCAVATED MATERIAL ON THE ROADWAY SURFACE OR WITHIN THE R.O.W. THE CONTRACTOR SHALL PLACE SPOILS IN A TRUCK AND TAKE IT TO A TEMPORARY STORAGE LOCATION OR TO ITS PERMANENT DISPOSAL LOCATION.

20. THE CONTRACTOR WILL NOT BE ALLOWED TO STRING WATER PIPE, SANITARY SEWER PIPE, OR APPURTENANCES ALONG THE ROUTE. ONLY THE PIPE AND APPURTENANCES THAT WILL BE INSTALLED DURING A SINGLE WORK DAY SHALL BE ALLOWED AND STORED WITHIN THE BARRICADED WORK AREA.

21. THE CONTRACTOR SHALL NOTIFY RONNIE VARNELL (817-392-7974) CITY OF FORT WORTH T/PW, 72 HOURS PRIOR TO CONSTRUCTION WITHIN 100 FEET OF ANY SIGNALIZED INTERSECTION. THE CONTRACTOR SHALL PROTECT EXISTING SIGNAL HARDWARE, GROUND BOXES, AND UNDERGROUND CONDUIT AT SIGNALIZED INTERSECTIONS. ANY DAMAGES AT SIGNALIZED INTERSECTIONS SHALL BE REPLACED AT THE EXPENSE OF THE CONTRACTOR. THE CITY WILL PERFORM CONDUIT LINE LOCATES AT SIGNALIZED INTERSECTIONS PRIOR TO COMMENCING WORK AT THIS INTERSECTION.

22. DURING THE MOVING OF CONSTRUCTION EQUIPMENT OR MATERIAL IN AND OUT OF AREAS THAT ARE CLOSED OR BARRICADED, THE CONTRACTOR SHALL PROVIDE A MINIMUM OF TWO FLAG MEN IN ACCORDANCE WITH THE TEXAS MANUAL ON TRAFFIC CONTROL DEVICES.

23. THE CONTRACTOR SHALL ATTEND MONTHLY MEETINGS, IF NECESSARY, WITH THE CITY TO REVIEW PROJECT STATUS, TRAFFIC CONTROL, AND WATER LINE SHUT DOWNS AND TIE-INS. THE FOLLOWING ARE REQUIRED TO ATTEND THE MEETINGS: JOHN KASAVICH, WATER DEPARTMENT INSPECTOR, CONTRACTOR'S PROJECT SUPERINTENDENT, CONTRACTOR'S PROJECT FOREMAN.

24. WATER SERVICE MUST BE MAINTAINED AT ALL TIMES. ONE SHUT DOWN WILL BE ALLOWED FOR ANY WATER CUSTOMER. SHUT DOWNS SHALL BE IN ACCORDANCE WITH THE SEQUENCING AND SHUT DOWN PLAN PROVIDED IN THESE PLANS. ANY CONSTRUCTION ISSUE THAT CAUSES THE UNPLANNED DISRUPTION IN SERVICE MUST BE RESOLVED AS SOON AS POSSIBLE. THE CONTRACTOR SHALL NOTIFY JOHN KASAVICH AT (817) 392-8480. THE CONTRACTOR'S CREWS MAY NOT LEAVE THE SITE UNTIL THE SERVICE IS RESTORED.

25. UTILITY SERVICES MUST BE MAINTAINED AT ALL TIMES. ANY CONSTRUCTION ISSUE THAT CAUSES THE DISRUPTION IN THE SERVICE MUST BE RESOLVED AS SOON AS POSSIBLE. THE CONTRACTOR SHALL NOTIFY JOHN KASAVICH: 817-392-8480, AND THE UTILITY SERVICE CONTACT. THE CONTRACTOR'S CREWS MAY NOT LEAVE THE SITE UNTIL THE SERVICE IS RESTORED.

26. ALL EXISTING GATE VALVES ARE TO BE SALVAGED AND RETURNED TO CITY OF FORT WORTH FIELD OPERATIONS YARD LOCATED AT 1608 11TH AVENUE PER SPECIFICATION 02 41 14.

27. ALL SANITARY SEWER MANHOLES TO BE ABANDONED SHALL BE PER PER SPECIFICATION 02 41 14.

28. IN THE EVENT OF A DISCREPANCY IN THE PLANS THE CONTRACTOR SHALL IMMEDIATELY NOTIFY THE CITY INSPECTOR, THE CITY PROJECT MANAGER (JOHN KASAVICH), AND THE ENGINEER. THE ENGINEER WILL CLARIFY THE DESIGN INTENT AND INSTRUCT THE CONTRACTOR ON HOW TO PROCEED.

29. THE CONTRACTOR SHALL BE RESPONSIBLE FOR FOLLOWING THE GENERAL INTENT OF THE SEQUENCING AS SHOWN IN THESE PLANS. THE SEQUENCING IS NOT AN ALL INCLUSIVE LIST OF THE ITEMS THAT WILL BE REQUIRED TO COMPLETE THE WORK. THE CONTRACTOR SHALL FOLLOW THE ORDER OF THE SEQUENCING AS STATED IN THE PLANS. THE INTENT OF THE SEQUENCING IS TO MAINTAIN WATER SERVICE IN THE EXISTING TRANSMISSION SYSTEM. THE CONTRACTOR MAY USE MULTIPLE CREWS TO ACCOMPLISH THE WORK. THE CONTRACTOR SHALL SUBMIT A WRITTEN PLAN TO USE MULTIPLE CREWS AND ANY CHANGES MADE TO THE SEQUENCING. THE CITY SHALL HAVE THE SOLE AUTHORITY TO DETERMINE IF THE INTENT OF THE SEQUENCING AND TRAFFIC CONTROL ARE MAINTAINED.

30. IN SOME CASES, INSTALLING THE SIGNAGE FOR THE TRAFFIC CONTROL MAY BE IN CONFLICT WITH OTHER CONSTRUCTION ACTIVITIES. THE CONTRACTOR SHALL BE RESPONSIBLE FOR COORDINATING WITH THE CITY AND INSTALLING THE SIGNAGE IN GENERAL ACCORDANCE WITH THE PLANS.

31. SITE AND SURFACE REPAIR SHOULD BE COMPLETED IN ACCORDANCE WITH THE SHUTDOWN AND SEQUENCING, UNLESS OTHERWISE APPROVED BY THE INSPECTOR. SURFACE RESTORATION MUST BE COMPLETED TO THE CITY'S SATISFACTION. IF THE CITY DETERMINES THAT SITE RESTORATION IS NOT OCCURRING IN A TIMELY FASHION, THE CITY MAY DEFER FURTHER PIPE INSTALLATION ACTIVITIES, UNTIL SURFACE RESTORATION IS COMPLETE.

32. TRENCH BACKFILL FOR THIS PROJECT SHALL BE PER PLAN DETAILS D522,D001,D101,D102/33 OF 54 AND D001,D201/36 OF 54, AS INDICATED, AND SHALL BE CONSIDERED SUBSIDIARY TO THE UNIT PRICE OF THE PIPE.

33. ELEVATION ADJUSTMENTS AT CONNECTIONS MAY BE MADE WITH BENDS, OFFSETS, OR JOINT DEFLECTIONS. JOINT DEFLECTIONS SHALL NOT EXCEED 50% OF MANUFACTURER'S RECOMMENDED DEFLECTION PER JOINT.

34. THE CONTRACTOR SHALL VIDEO ALL POTENTIALLY IMPACTED PRIVATE PROPERTY AREAS PRIOR TO WORK. VIDEOS SHALL INCLUDE DATE NOTATION AND AUDIO IDENTIFICATION OF PROPERTY ADDRESS AND MAIN/LATERAL NAME. THIS PRE-CONSTRUCTION VIDEO TAPING OF IMPACTED PROPERTIES SHALL BE CONSIDERED SUBSIDIARY TO THE COST OF THE PROJECT.

35. EXISTING VERTICAL DEFLECTIONS AND PIPE SLOPES SHOWN ON THE PLANS WERE OBTAINED FROM RECORD DRAWINGS AND HAVE NOT BEEN FIELD VERIFIED. RIM ELEVATIONS AND HORIZONTAL LOCATIONS OF EXISTING MANHOLES WERE DETERMINED FROM FIELD SURVEY.

36. COSTS ASSOCIATED WITH TREE REMOVAL SHALL BE CONSIDERED SUBSIDIARY TO THE VARIOUS ITEMS LISTED IN THE PROPOSAL. THE CONTRACTOR SHALL TAKE ALL PRECAUTIONS REQUIRED TO PREVENT TREE DAMAGE. PRIOR TO THE CONTRACTOR REMOVING ANY TREES, A MEETING SHALL BE HELD AT THE SITE BETWEEN THE CONTRACTOR, OWNER, ENGINEER, AND LANDOWNER TO CONFIRM TREE REMOVAL. SHOULD A TREE NOT ALREADY INDICATED FOR REMOVAL NEED TO BE REMOVED IN ORDER TO COMPLETE THE CONSTRUCTION, THE CONTRACTOR SHALL CONTACT THE OWNER PRIOR TO REMOVAL OF ANY TREE AND IN ACCORDANCE WITH THE SPECIFICATIONS AND DRAWINGS. THE CONTRACTOR SHALL REIMBURSE THE CITY FOR ANY ADDITIONAL DAMAGES PAID BY THE CITY TO THE LANDOWNER FOR DAMAGED TREES PER THE EASEMENT/PERMIT AGREEMENTS.

37. THE CONTRACTOR SHALL BE RESPONSIBLE FOR PROVIDING TEMPORARY PLUGS FOR PRESSURE TESTING THE PROPOSED PIPELINES. THE COST OF THIS SHALL BE SUBSIDIARY TO THE VARIOUS ITEMS LISTED IN THE PROPOSAL.

38. NO EXCESS EXCAVATED MATERIAL SHALL BE DEPOSITED IN LOW AREAS OR ALONG NATURAL DRAINAGE WAYS, WITHOUT WRITTEN PERMISSION FROM THE CITY OF FORT WORTH AND TARRANT REGIONAL WATER DISTRICT. IF THE CONTRACTOR PLACES EXCESS MATERIAL IN AREAS WITHOUT WRITTEN PERMISSION, HE SHALL BE RESPONSIBLE FOR ALL DAMAGE RESULTING FROM SUCH FILL AND HE SHALL REMOVE THE MATERIAL AT HIS OWN COST IF THE OWNER SO DIRECTS.

39. CONTRACTOR SHALL REFER TO CITY OF FORT WORTH DESIGN CRITERIA STANDARDS FOR WATER DETAILS, UNLESS OTHERWISE SPECIFIED.

40. THE PROPOSED PIPELINE MAY, AT TIMES, BE LAID CLOSE TO OTHER EXISTING UTILITIES AND STRUCTURES BOTH ABOVE AND BELOW GROUND. THE CONTRACTOR SHALL MAKE NECESSARY PROVISIONS FOR THE SUPPORT AND PROTECTION OF ALL UTILITY POLES, GAS MAINS, TELEPHONE CABLES, WATER LINES, CABLES, DRAINAGE PIPES, UTILITY SERVICES, AND ALL OTHER UTILITIES AND STRUCTURES BOTH ABOVE AND BELOW GROUND DURING CONSTRUCTION. THE CONTRACTOR SHALL BE RESPONSIBLE FOR ALL DAMAGE DONE TO SUCH EXISTING FACILITIES AS A RESULT OF THE CONTRACTOR'S OPERATIONS.

41. THE CONNECTION BETWEEN LINE B AND THE EXISTING 24-INCH WATER LINE SHALL BE MADE BETWEEN FEB. 1 AND APRIL 15. OR OCT. 1 AND NOV. 30, OR AS DIRECTED BY THE WATER DEPARTMENT. NO CONNECTIONS TO EXISTING WATER LINES WILL BE ALLOWED TO BE PERFORMED BETWEEN APRIL 15 AND SEPT. 30. SHOULD THE CONTRACTOR BE REQUIRED TO REMOBILIZE TO PERFORM THESE CONNECTIONS, NO SEPARATE PAYMENT WILL BE ALLOWED FOR THIS ITEM. SEE WATER LINE SHUT DOWN AND SEQUENCING ON SHEET 5 OF 54.

42. THE CONTRACTOR MUST MAINTAIN ACCESS TO EACH PRIVATE PROPERTY ADJACENT TO THE WORK. ANY TEMPORARY DRIVEWAY CLOSURES SHALL BE COORDINATED WITH THE PROPERTY OWNER A MINIMUM OF 48 HOURS PRIOR TO CLOSURE AND SHALL NOT OCCUR DURING BUSINESS HOURS WITHOUT PRIOR CONSENT. DRIVEWAY ACCESS TO MEDICAL FACILITIES SHALL BE MAINTAINED AT ALL TIMES. ACCESS FOR EMERGENCY VEHICLES SHALL BE MAINTAINED AT ALL TIMES.

43. WESTERN CENTER BLVD IS AN ARTERIAL ON THE CITY OF FORT WORTH MASTER THOROUGHFARE PLAN. NO CONSTRUCTION WILL BE PERMITTED BETWEEN 7:00 AM TO 9:00 AM AND 4:00 PM TO 6:00 PM.

44. WHERE CONNECTIONS TO EXISTING PIPELINES ARE MADE, THE CONTRACTOR SHALL BE RESPONSIBLE FOR DEWATERING THE EXISTING PIPELINES PER SPECIAL CONDITIONS 33 12 25 "CONNECTION TO EXISTING WATER MAINS". DEWATERING SHALL BE CONSIDERED SUBSIDIARY WORK.

45. IT IS THE RESPONSIBILITY OF THE CONTRACTOR TO ARRANGE FOR PARKING FOR EMPLOYEES AND ALL EQUIPMENT. THE CONTRACTOR MAY NOT USE PRIVATE PARKING LOTS FOR EMPLOYEE PARKING WITHOUT PRIOR WRITTEN CONSENT FROM THE PROPERTY OWNER.

46. CLEANING WYES AND PIGS SHALL BE PER DETAIL D-135 AND D-136/32 OF 54. CONTRACTOR SHALL COORDINATE PIGGING WITH THE CITY INSPECTOR. THE LOCATIONS OF CLEANING WYES SHALL BE AS SHOWN ON PLANS. AFTER CLEANING WITH POLY-PIG WYES SHALL BE REMOVED, EXCEPT FOR 24" WYES.

47. EXISTING WATER LINES MAY BE CAST IRON PIPING WHICH DOES NOT CONFORM TO STANDARD DUCTILE IRON NOMINAL SIZES. CONTRACTOR SHALL MEASURE ANY EXISTING CAST IRON PIPES PRIOR TO CUTTING IN ORDER TO DETERMINE THE CORRECT FITTING SIZE.

48. CONTRACTOR SHALL INSTALL WATER AND SANITARY SEWER LINE MARKERS PER SPECIFICATION 33 05 26.

49. FINAL ADJUSTMENT OF MANHOLE CASTINGS, VALVE VAULTS, METER BOXES, AND OTHER AT-GRADE APPURTENANCES SHALL TAKE PLACE AFTER ALL ROADWAY WORK IS COMPLETE.

CONTACT INFORMATION FOR UTILITY OWNERS:

DIGTESS	800-344-8377
AT&T (TELEPHONE)	
GARY TILORY	817-338-6202
ATMOS ENERGY (GAS)	
WILLIAM DAY	817-215-4368
CITY OF FORT WORTH	
JOHN KASAVICH	817-392-8480
CITY OF FORT WORTH (FIELD OPERATIONS)	
RUSSEL CURLE	817-392-2622
ROGER HAUSER	817-925-2360
CITY OF FORT WORTH (LOCATES)	
WATER AND SEWER	817-392-8296
CITY AND TRAFFIC	817-392-7738
ONCOR (ELECTRIC)	
GARY WILSON	817-215-6017
ALTON GILLIT	817-215-6141
RANDY BELL	940-497-7530
TIME WARNER (CABLE)	
DAVID CHENEY	214-320-7406
VERIZON (FIBER OPTIC)	
ERIK BAKER	872-729-6079

STATE OF TEXAS
RYAN D. OWEN
109586
LICENSED
PROFESSIONAL ENGINEER
7/13/2012

Kimley-Horn and Associates, Inc.
TEXAS REGISTERED ENGINEERING FIRM F-928

Texas Department of Transportation
© 2012

IH 35W FROM NORTH TARRANT PKWY TO IH 820

IH 35W UTILITY RELOCATIONS

PROJECT SPECIFIC NOTES

SHEET 3 OF 54

DESIGN	FED. RD. DIV. NO.	FEDERAL AID PROJECT NO.		HIGHWAY NO.
KHA	6	(SEE TITLE SHEET)		IH 35W
GRAPHICS KHA	STATE	DISTRICT	COUNTY	SHEET NO.
CHECK KHA	TEXAS	FTW	TARRANT	1341
CHECK KHA	CONTROL	SECTION	JOB	
	0014	16	255, ETC.	

DRAWING DATE: 7/13/2012 FILENAME: S3BPUTIL*NOTES03.dgn

WASTEWATER BYPASS PUMPING REQUIREMENTS

1. THE CONTRACTOR SHALL SUBMIT A PLUGGING AND BYPASS PUMPING PLAN IN ACCORDANCE WITH SPECIFICATION 33 03 10 WHICH SHALL INCLUDE THE FOLLOWING:

A. PROPOSED TYPE AND SIZE OF PLUGS TO BE USED AT EACH PROPOSED PLUGGING LOCATION. THE CONTRACTOR SHALL ALSO PROVIDE CALCULATIONS THAT SHOW INFLATION PRESSURE OF THE PLUG FOR THE ANTICIPATED HYDROSTATIC HEAD, THE PRESSURE RATING FOR EACH PLUG, THE METHOD FOR SECURING THE PLUG TO PREVENT IT FROM TRAVELING DOWNSTREAM, AND BRACING CALCULATIONS AND SCHEMATICS TO HOLD THE PLUG IN PLACE DURING THE PLUGGING OPERATION. ALL PRESSURE AND BRACING CALCULATIONS SHALL BE SEALED BY A LICENSED ENGINEER IN THE STATE OF TEXAS.

B. PROPOSED TYPE AND SIZE OF PUMPING EQUIPMENT TO BE PROVIDED AT EACH BYPASS PUMPING LOCATION. THE CONTRACTOR SHALL PROVIDE THE TYPE OF PUMP, TYPE AND LENGTH OF DISCHARGE PIPING, TYPE AND LENGTH OF SUCTION PIPING, HYDRAULIC CALCULATION FOR EACH LOCATION WHICH INCLUDE THE TOTAL DYNAMIC HEAD VERSUS CAPACITY CURVES FOR EACH PUMP TO BE USED AND SYSTEM CURVE OF THE DISCHARGE PIPING, THE MAXIMUM SUCTION LIFT ACHIEVABLE BY THE PUMPING UNIT, AND THE TYPE OF MOTOR AND/OR GENERATOR PROVIDED WITH ITS FUEL CAPACITY. ALL CAPACITY CALCULATIONS SHALL BE SEALED BY A LICENSED ENGINEER IN THE STATE OF TEXAS.

2. THE CONTRACTOR IS RESPONSIBLE FOR ALL JOB SITE SAFETY. THE SUBMISSION AND/OR ACCEPTANCE OF THIS MATERIAL DOES NOT ALLEVIATE THE CONTRACTOR OF THIS RESPONSIBILITY.

3. PRIOR TO THE SUBMISSION OF THE BYPASS PUMPING PLAN TO THE CITY OF FORT WORTH, THE CONTRACTOR SHALL VISIT EACH BYPASS PUMPING AND PLUGGING LOCATION WITH A CITY OF FORT WORTH FIELD OPERATION REPRESENTATIVE. THE CONTRACTOR SHALL CONTACT RUSSELL CURLE AT 817-991-9651 TO SCHEDULE THE SITE VISITS OF THESE LOCATIONS.

4. ALL PLUGS SHALL BE PROVIDED BY A MANUFACTURER REGULARLY ENGAGED IN THE MANUFACTURING OF PLUGS FOR USE IN SANITARY SEWERS OF THE SIZE AND TYPE ON THIS PROJECT. 24-INCH AND SMALLER PLUGS SHALL HAVE A MINIMUM PRESSURE RATING OF 35 PSI. THE PLUG SHALL BE THE APPROPRIATE SIZE FOR THE PIPELINE THAT IT IS INTENDED TO BE USED. THE PLUG AND THE BRACING OF THE PLUG SHALL BE CAPABLE OF WITHSTANDING THE MAXIMUM ANTICIPATED HYDROSTATIC CONDITION FOR EACH PLUGGING LOCATION. THE MINIMUM HYDROSTATIC PRESSURE SHALL BE THE ELEVATION FIVE (5) FEET ABOVE THE NEAREST OPEN UP STREAM MANHOLE.

5. PRESSURE GAGES SHALL BE PROVIDED FOR EACH PLUG SO THAT THE CONTRACTOR CAN CONTINUOUSLY MONITOR THAT THE PLUG IS MAINTAINED AT THE PROPER PRESSURE.

6. THE CONTRACTOR SHALL PROVIDE A METHOD FOR RELIEVING THE HYDROSTATIC PRESSURE OFF OF THE PLUG PRIOR TO ANY DEFLATION OF THE PLUG.

7. BYPASS PUMPING - THE BYPASS PUMPING ASSEMBLY SHALL BE CAPABLE OF CONVEYING THE CAPACITY OF THE UPSTREAM PIPELINE FLOWING FULL. FOR INSTALLATIONS THAT ARE ANTICIPATED TO BE IN PLACE LONGER THAN 4 HOURS, FULL REDUNDANT CAPACITY FOR BOTH PIPING AND PUMPING EQUIPMENT SHALL BE PROVIDED AT EACH LOCATION. THE REDUNDANT PIPING AND PUMPING EQUIPMENT SHALL BE INSTALLED AND READY FOR SERVICE AT ANYTIME DURING THE BYPASS OPERATION. THE PUMPING EQUIPMENT SHALL HAVE ADEQUATE LIFT SO THAT A LARGE HYDROSTATIC HEAD IS NOT REQUIRED FOR THE PUMPING ASSEMBLY TO CONVEY THE DESIGN FLOW. HOSE WILL NOT BE ALLOWED TO SERVE AS DISCHARGE PIPING FOR PUMPING ASSEMBLIES REQUIRING MORE THAN A 3-INCH DIAMETER DISCHARGE PIPING. IF ANY LEAKAGE OCCURS IN THE DISCHARGE PIPING, THE CONTRACTOR SHALL IMMEDIATELY TAKE THE NECESSARY STEP TO STOP ANY DISCHARGES OUTSIDE OF THE SEWER COLLECTION SYSTEM.

8. BYPASS PUMPING SYSTEMS SHALL BE CONTINUOUSLY MANNED (24 HOURS A DAY, 7 DAYS A WEEK) WHILE PUMPS ARE IN OPERATION.

9. THE PLUGGING AND BYPASS PUMPING PLAN SHALL BE SUBSIDIARY TO THE VARIOUS BID ITEMS; NO SEPARATE PAYMENT WILL BE ALLOWED FOR THIS ITEM.

A COMPLETE BYPASS PUMPING PLAN MUST BE SUBMITTED TO JOHN KASAVICH, CITY OF FORT WORTH WATER DEPARTMENT, IN ACCORDANCE WITH SPECIFICATION SECTION 33 03 10-BYPASS PUMPING OF EXISTING SEWER SYSTEMS. BYPASS PUMPING PLAN MUST BE APPROVED BY THE CITY PRIOR TO ANY BYPASS PUMPING WORK.

PHASE 1 CONSTRUCT 42-INCH WASTEWATER LINE A AND 12-INCH WASTEWATER LINE B:

1. PROVIDE NOTIFICATION TO ALL AFFECTED PROPERTY OWNERS TO COORDINATE CONSTRUCTION.
2. STAKE PERMANENT EASEMENTS, TEMPORARY CONSTRUCTION EASEMENTS AND RIGHT-OF WAY PRIOR TO CONSTRUCTION.
3. PREPARE RIGHT-OF-WAY FOR CONSTRUCTION, INCLUDING RELOCATING SIGNS, LIGHT POLES, TRANSFORMERS, RETAINING WALLS, ETC.
4. COORDINATE WORK WITH FRANCHISE UTILITY INSTALLATIONS.
5. EXPLORATORY EXCAVATE AND SURVEY 12-INCH M-562* WASTEWATER LINE AT THE CROSSING LOCATION OF PROPOSED 42-INCH WASTEWATER LINE A. IF EXISTING LINE APPEARS TO BE IN CONFLICT WITH THE PROPOSED 42-INCH WASTEWATER LINE A, CONTACT THE FWWD, CITY INSPECTOR AND ENGINEER BEFORE ANY ADDITIONAL CONSTRUCTION. EXCAVATION IS TO REMAIN OPEN DURING THE TUNNEL OPERATION.
6. CONSTRUCT BYPASS MH-1 AT EXISTING M-391 STATION 8+36.7 AND BYPASS MH-2 AT EXISTING M-391 STATION 17+42.6 FOR BYPASS PUMPING AROUND PROPOSED JUNCTION MANHOLES ON WASTEWATER LINE A.
7. INSTALL 60-INCH CASING OR TUNNEL LINER PLATE FROM WASTEWATER LINE A STATION 0+55 TO 5+69 AND FROM WASTEWATER LINE A STATION 6+10 TO 8+40.
8. CONSTRUCT 42-INCH WASTEWATER LINE A FROM APPROXIMATE STATION 0+00 TO STATION 8+71.85 WITHOUT CONNECTING TO THE EXISTING WASTEWATER LINE.
9. CONSTRUCT THE JUNCTION MANHOLES AT WASTEWATER LINE A STATION 0+00 AND STATION 8+71.85 WHILE THE EXISTING M-391 WASTEWATER LINE REMAINS IN SERVICE.
10. CONSTRUCT 12-INCH WASTEWATER LINE B WITHOUT CONNECTING TO THE EXISTING WASTEWATER MAIN.

PHASE 2 BYPASS PUMPING AND CONNECTION TO EXISTING WASTEWATER LINES:

1. SET UP BYPASS PUMPING EQUIPMENT AT BYPASS LOCATION A.
2. INSTALL TEMPORARY 42-INCH PLUG UPSTREAM OF BYPASS MH-1 AND INSTALL A PERMANENT PLUG DOWNSTREAM OF EXISTING MH AT M-391 STA. 8+67. BEGIN BYPASS PUMPING AT BYPASS LOCATION A FROM EXISTING MH AT M-391 STA. 8+67 TO BYPASS MH-1.
3. SET UP BYPASS PUMPING EQUIPMENT AT BYPASS LOCATION B.
4. INSTALL TEMPORARY 36-INCH PLUG DOWNSTREAM OF BYPASS MH-2, AND INSTALL A PERMANENT PLUG UPSTREAM OF EXISTING MH AT M-391 STA. 16+65. BEGIN BYPASS PUMPING AT BYPASS LOCATION B FROM BYPASS MH-2 TO EXISTING MH AT M-391 STA. 16+65.
5. CUT AND REMOVE EXISTING PIPE IN JUNCTION MH AT WASTEWATER LINE A STATION 0+00, PLUG EXISTING 42" PIPE UPSTREAM OF JUNCTION MANHOLE, COMPLETE INTERIOR MH COATING AND COMPLETE CONSTRUCTION OF THE JUNCTION MH INVERT AND BENCH.
6. CUT AND REMOVE EXISTING PIPE IN JUNCTION MH AT WASTEWATER LINE A STA. 8+71.85, PLUG EXISTING 36" PIPE DOWNSTREAM OF JUNCTION MANHOLE, COMPLETE INTERIOR MH COATING AND COMPLETE CONSTRUCTION OF THE JUNCTION MH INVERT AND BENCH.

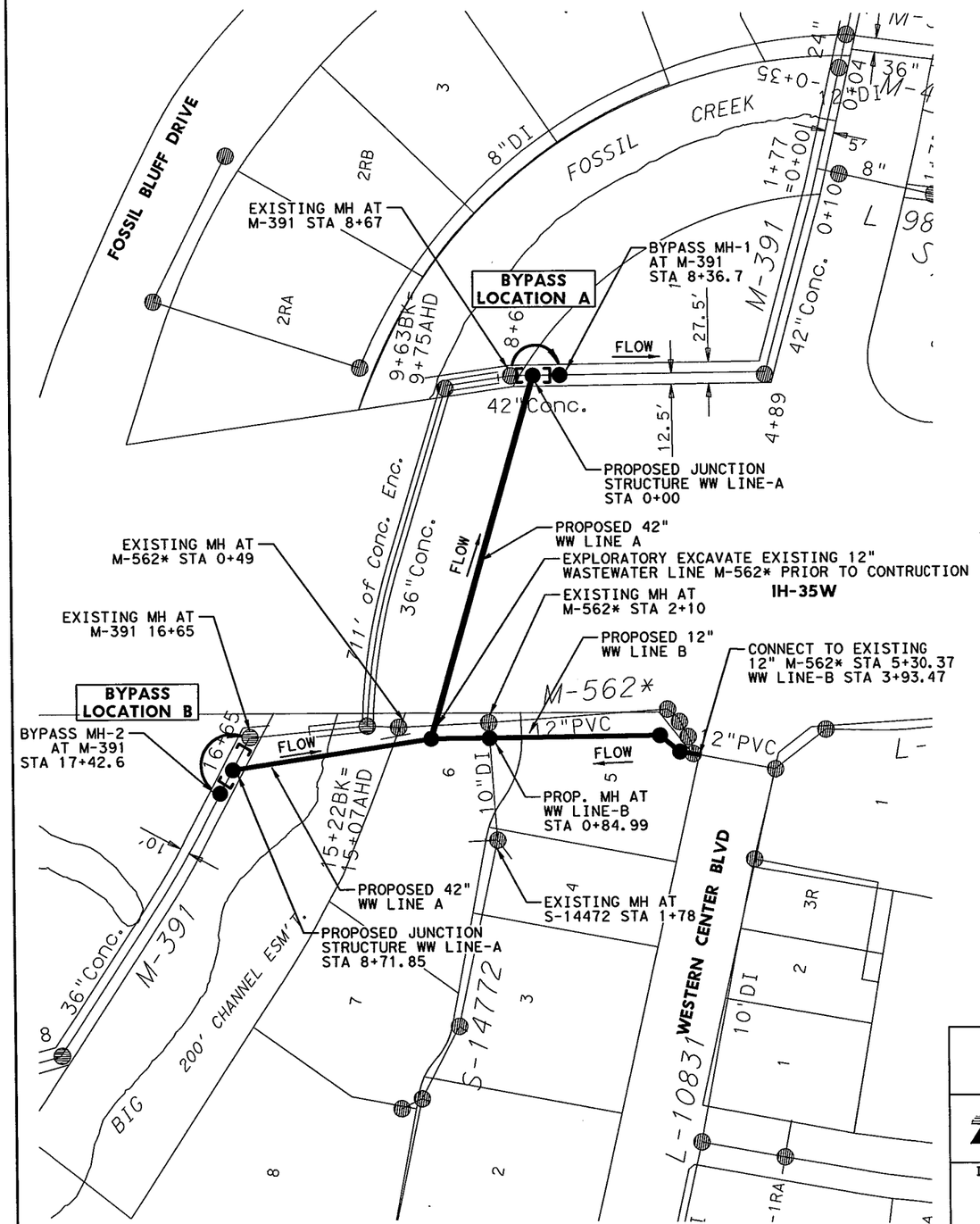

0' 50' 100' 200'
SCALE IN FEET
CITY OF FORT WORTH MAP # - 2054-432

7. TEMPORARILY PLUG EXISTING 10-INCH S-14772 AND EXISTING 12-INCH M-562* FOR CONNECTIONS. CONNECT EXISTING 10-INCH S-14772 TO WASTEWATER LINE B AT STATION 0+84.99, CONSTRUCT REMAINING 12" WASTEWATER LINE B AND CONNECT TO EXISTING 12" M-562* AT WASTEWATER LINE B STATION 3+93.47.
8. REMOVE THE TEMPORARY PLUG UPSTREAM OF BYPASS MANHOLE 1 AND REMOVE THE TEMPORARY PLUG DOWNSTREAM OF BYPASS MANHOLE 2.
9. REMOVE BYPASS PUMPING AT BYPASS LOCATION A AND BYPASS LOCATION B.
10. CUT AND PLUG EXISTING WASTEWATER LINES, REMOVE OR ABANDON EXISTING MANHOLES AND ABANDON PIPE AS NOTED ON THE ABANDONMENT SHEETS.
11. COMPLETE SURFACE RESTORATION.

STATE OF TEXAS
RYAN D. OWEN
109586
LICENSED PROFESSIONAL ENGINEER
7/13/2012

Kimley-Horn and Associates, Inc.
TEXAS REGISTERED ENGINEERING FIRM F-928

Texas Department of Transportation
© 2012

IH 35W FROM NORTH TARRANT PKWY TO IH 820

IH 35W UTILITY RELOCATIONS

WASTEWATER BYPASS PUMPING PLAN

SCALE: 1" = 200' SHEET 4 OF 54

DESIGN	FED. RD. DIV. NO.	FEDERAL AID PROJECT NO.		HIGHWAY NO.
KHA	6	(SEE TITLE SHEET)		IH 35W
GRAPHICS	STATE	DISTRICT	COUNTY	SHEET NO.
KHA	TEXAS	FTW	TARRANT	1342
CHECK	CONTROL	SECTION	JOB	
KHA	0014	16	255, ETC.	

FILENAME: S3BPUTIL*NOTES04.dgn

DRAWING DATE: 7/13/2012

SHUTDOWN AND SEQUENCING NOTES

GENERAL NOTES:

1. NOTIFY THE CITY OF FORT WORTH (CITY) INSPECTOR, ENGINEER, AND JOHN KASAVICH WITH THE FORT WORTH WATER DEPARTMENT (FWWD) TWO (2) WEEKS PRIOR TO COMMENCING WORK TO SCHEDULE A SEQUENCING COORDINATION MEETING.
2. ALL PROPOSED RIGHT-OF-WAY REQUIRED FOR CONSTRUCTION OF THE WATER AND WASTEWATER LINES MUST BE ACQUIRED AND CLEARED BY TXDOT PRIOR TO STARTING CONSTRUCTION.
3. CONTRACTOR SHALL STAKE PERMANENT EASEMENTS, TEMPORARY EASEMENTS AND RIGHT-OF-WAY PRIOR TO STARTING CONSTRUCTION.
4. CONTRACTOR IS RESPONSIBLE FOR COORDINATING THEIR WORK TO ACCOMMODATE AVAILABLE SHUT-DOWN TIMES FOR BUSINESS AND PROPERTY OWNERS.
5. ONCE CONSTRUCTION ON A PARTICULAR LINE HAS COMMENCED, IT MUST BE COMPLETED PRIOR TO BEGINNING WORK ON ANY OTHER SEGMENT OR LINE INCLUDED IN THIS PROJECT. WITH PRIOR APPROVAL OF THE ENGINEER, THE CONTRACTOR MAY BE ALLOWED TO WORK CONCURRENTLY ON MORE THAN ONE SEGMENT OF THE CONSTRUCTION PROVIDED THAT WORK CONTINUES ON EACH PORTION OF THE PROJECT UNTIL COMPLETE.
6. FOR 12-INCH AND SMALLER LINES, IN AN EFFORT TO RESTORE TRAFFIC TO NORMAL CONDITIONS PAVEMENT REPAIR MAY BE REQUIRED TO BE COMPLETED PRIOR TO TESTING THE LINE. NO EXTRA PAYMENT WILL BE ALLOWED FOR ADDITIONAL PAVEMENT REPAIR RESULTING FROM FAILED TESTING. IN ADDITION, NO PAYMENT WILL BE ALLOWED FOR TEMPORARY PAVING IN LIEU OF PERMANENT PAVEMENT REPAIR FOR PURPOSES RELATED TO THIS SEQUENCE.
7. CONTRACTOR SHALL BE RESPONSIBLE FOR COORDINATING THE APPROPRIATE NUMBER OF CREWS (WELDERS, EXCAVATORS, FLAGMEN, ETC.) REQUIRED TO PERFORM CONNECTIONS TO THE EXISTING MAINS. CONTRACTOR SHALL HAVE CREWS AVAILABLE 24 HOURS A DAY TO COMPLETE THE PROPOSED CONNECTIONS AND RESTORE THE SERVICE.
8. CONTRACTOR SHALL BE RESPONSIBLE FOR DE-CHLORINATING THE WATER DURING THE SHUTDOWN.
9. EXISTING WATER TRANSMISSION LINES MAY NOT BE OUT OF SERVICE DURING THE HIGH-DEMAND SEASON, DEFINED AS APRIL 15 THROUGH OCTOBER 15 OF EACH YEAR, BUT IS SUBJECT TO CHANGE. THE CONTRACTOR IS RESPONSIBLE FOR COORDINATING THEIR WORK TO ACCOMMODATE AVAILABLE SHUT-DOWN TIMES. NO ADDITIONAL TIME OR COMPENSATION WILL BE ALLOWED DUE TO DELAYS TO MEET SHUT DOWN TIMES.
10. IN GENERAL, THE SEQUENCE OF CONSTRUCTION SHALL OCCUR AS FOLLOWS:
    - 24-INCH WATER LINE B, CROSSING IH-35W AT WESTERN CENTER BOULEVARD.
    - 12-INCH WATER LINE C, CROSSING WESTERN CENTER BOULEVARD EAST OF NBFR.
    - 12-INCH WATER LINE A, FROM SANDSHELL DRIVE TO WESTERN CENTER BOULEVARD.
    - CONNECT TO EXISTING 24-INCH WATER LINE
11. THIS IS A GENERAL SEQUENCE OF CONSTRUCTION. THE ACTUAL SEQUENCE OF CONSTRUCTION WILL HAVE TO COORDINATE WITH ADJACENT CONSTRUCTION ACTIVITIES, AND ADJACENT FACILITIES ACTIVITIES.
12. CONTRACTOR SHALL FIELD VERIFY LOCATION OF ALL WATER METERS, SERVICES, FIRE LINES AND OTHER APPURTENANCES PRIOR TO CONSTRUCTION.
13. CONTRACTOR SHALL PROVIDE 2 WEEK, 48 HOUR AND 24 HOUR NOTICE TO ALL AFFECTED PROPERTY OWNERS PRIOR TO INTERRUPTION OF SERVICE.

PHASE 1 24-INCH WATER LINE B AND 12-INCH WATER LINE C INSTALLATION:

1. PROVIDE NOTIFICATION TO ALL AFFECTED CUSTOMERS TO COORDINATE SHUT DOWN.
2. RIGHT-OF-WAY SHALL BE PREPARED FOR CONSTRUCTION PRIOR TO ANY UTILITY CONSTRUCTION, INCLUDING RELOCATING SIGNS, LIGHT POLES, TRANSFORMERS, RETAINING WALLS, ETC.
3. RELOCATE PROPERTY OWNER'S FACILITIES.
4. COORDINATE WORK WITH FRANCHISE UTILITY INSTALLATIONS.
5. IMPLEMENT TRAFFIC CONTROL PLAN PHASE 1.
6. CLEAR CONSTRUCTION AREA FOR BORE PIT AND RECEIVING PIT FOR CASING INSTALLATION ON WATER LINE B.
7. INSTALL 42-INCH CASING FROM WATER LINE B STATION 1+13 TO STATION 6+88.
8. INSTALL 24-INCH WATER MAIN FROM WATER LINE B STATION 0+53.5 TO THE VALVE AT WATER LINE B STATION 8+55.04 WITHOUT CONNECTING TO EXISTING WATER MAIN. COORDINATE IMPLEMENTATION OF TRAFFIC CONTROL PLAN PHASE 2 AND PHASE 3.
9. ENSURE VALVE WL B-9 IS CLOSED.
10. CONSTRUCT 12-INCH WATER LINE C FROM STATION 0+00 TO CONNECTION AT STATION 0+91.87 AND CONNECT TO EXISTING 10-INCH WATER LINE. VALVE WL B-9 IS TO REMAIN CLOSED UNTIL CLEANING, DISINFECTION AND TESTING OF THE WATER MAIN IS COMPLETE.

PHASE 2 12-INCH WATER LINE A INSTALLATION:

1. COORDINATE CONSTRUCTION ACTIVITIES WITH SEVEN-ELEVEN, BRAUM'S, DENNY'S, WENDY'S AND OTHER AFFECTED BUSINESSES.
2. INSTALL CASING ACROSS DRIVEWAYS ON WATER LINE A.
3. CONSTRUCT 12-INCH WATER MAIN FROM WATER LINE A STATION 0+00 (WESTERN CENTER BLVD.) TO WATER LINE A STATION 10+52.85 (SANDSHELL), WITHOUT CONNECTING TO THE EXISTING WATER MAIN.
   A. INSTALL WATER MAIN APPURTENANCES.
   B. COORDINATE METER LOCATIONS AND PRIVATE SERVICE CONNECTIONS WITH PROPERTY OWNERS PRIOR TO CONSTRUCTION OF SERVICES.
   C. INSTALL DOMESTIC METERS, IRRIGATION METERS AND BACKFLOW PREVENTERS.
4. CLEAN, DISINFECT AND TEST ALL WATER MAIN (WATER LINE A, B AND C).

PHASE 3 12-INCH WATER LINE A CONNECTION:

1. COORDINATE SHUT DOWN WITH JOHN KASAVICH (FWWD) AND THE CITY INSPECTOR.
2. CONTACT THE FOLLOWING AFFECTED BUSINESSES ALONG THE NBFR FOR SHUT-DOWN COORDINATION AND NOTIFICATION.

   1. SEVEN-ELEVEN 3300 WESTERN CENTER BLVD (817)-232-1758
   2. BADAZZ BURRITO 3300 WESTERN CENTER BLVD (817)-847-4411
   3. COMET ONE HOUR DRY CLEANERS 3300 WESTERN CENTER BLVD (817)-232-5343
   4. DONUT PALACE 3300 WESTERN CENTER BLVD (817)-232-1883
   5. FINE ARTS TATTOO STUDIO 3300 WESTERN CENTER BLVD 817-727-8352
   6. MARVY NAIL SALON 3300 WESTERN CENTER BLVD (817)-306-5054
   7. WINGSTOP 3300 WESTERN CENTER BLVD (817)-232-9333
   8. DENNY'S 6480 NORTH FREEWAY (817)-847-1939
   9. BRAUM'S 6450 NORTH FREEWAY (817)-847-8114
   10. WENDY'S 6440 NORTH FREEWAY (817)-232-8474

3. CLOSE EXISTING 12-INCH VALVES WL A-1 AND WL A-2 AND CONNECT TO EXISTING 12" WATER LINE AT SANDSHELL DRIVE. SHUT DOWN SHALL TAKE PLACE FOR A MAXIMUM OF 4 HOURS, AND SHALL BE SCHEDULED BASED ON TIMES COORDINATED WITH BUSINESS OWNERS.
4. TIE-IN NEW SERVICES AND PLUG SERVICE CONNECTIONS ON EXISTING WATER MAIN.
5. INSTATE SERVICE ON WATER LINE A AND OPEN VALVE WL B-9 ADJACENT TO WATER LINE C.
6. CUT AND PLUG EXISTING WATER LINE, REMOVE AND SALVAGE EXISTING GATE VALVES, FIRE HYDRANTS, AND WATER METERS.
7. COMPLETE SURFACE RESTORATION.

PHASE 3 24-INCH WATER LINE B CONNECTION EAST OF IH-35W:

1. COORDINATE SHUT DOWN WITH JOHN KASAVICH (FWWD) AND THE CITY INSPECTOR.
2. COORDINATE A TEST SHUT DOWN WITH THE JOHN KASAVICH AND THE CITY INSPECTOR TO ENSURE THAT THE FOLLOWING DEVELOPMENT CAN REMAIN IN SERVICE WHEN VALVES WL B-3, WL B-5 AND WL B-7 ARE CLOSED.

   1. THE CLUB AT FOSSIL CREEK APARTMENTS 3400 WESTERN CENTER BLVD - FILIPE SOTO (817)-495-4242

3. PENDING THE TEST SHUT DOWN, PROPERTIES MAY BE OUT OF SERVICE FOR THE DURATION OF THE CONNECTION. SHUT DOWN SHALL TAKE PLACE FOR A MAXIMUM OF 8 HOURS, AND SHALL BE SCHEDULED BASED ON TIMES COORDINATED WITH BUSINESS OWNERS.
4. CLOSE VALVES WL B-1, WL B-2, WL B-3, WL B-4, WL B-5, WL B-6, WL B-7 AND WL B-8.
5. CONNECT TO EXISTING WATER LINE EAST OF IH-35W AT WATER LINE B STATION 8+62.05.
6. CLOSE THE NEW 24-INCH WATER VALVE AT WATER LINE B STA. 7+74.11 AND PLACE 24-INCH WATER LINE BACK IN SERVICE FROM THE EAST. WL B-1 IS TO REMAIN CLOSED.
7. CUT AND PLUG EXISTING WATER LINE, REMOVE AND SALVAGE EXISTING GATE VALVES AND OTHER APPURTENANCES.
8. COMPLETE SURFACE RESTORATION.

PHASE 4 24-INCH WATER LINE B CONNECTION WEST OF IH-35W:

1. COORDINATE SHUT DOWN WITH JOHN KASAVICH (FWWD) AND THE CITY INSPECTOR.
2. CONTACT REPRESENTATIVES OF AFFECTED PROPERTIES BETWEEN VALVE WL B-1 AND WL B-10 ALONG WESTERN CENTER BOULEVARD WEST OF IH-35W. ADDITIONAL BUSINESSES MAY REQUIRE COORDINATION AT THE TIME OF CONSTRUCTION.

   1. INDIGO POINTE AT WESTERN CENTER APARTMENTS 2650 WESTERN CENTER BLVD - BOBBY WIGGINS (817)-896-8709
   2. ALLIANCE MEDICAL SPA 2700 WESTERN CENTER BLVD (817)-306-9494
   3. QUEST DIAGNOSTICS 2700 WESTERN CENTER BLVD
   4. FRUITATION 2700 WESTERN CENTER BLVD (817)-232-8114
   5. EDIBLE ARRANGEMENTS 2700 WESTERN CENTER BLVD (817)-232-8114
   6. HIGHLAND CLEANERS 2700 WESTERN CENTER BLVD (817)-232-9263
   7. WESTERN CENTER DENTAL 2700 WESTERN CENTER BLVD (817)-847-1131
   8. FIRST CHOICE EMERGENCY ROOM 2710 WESTERN CENTER BLVD - TODD BRADBURY (469)-569-8633
   9. DR. CHAD A. CURLEE, FAMILY MEDICINE CLINIC 2720 WESTERN CENTER BLVD (817)-847-0200
   10. MIHILLS-WEBB PRIMARY CARE PHYSICIANS 2720 WESTERN CENTER BLVD (817)-847-0200
   11. PREMIER REHAB PHYSICAL THERAPY 2720 WESTERN CENTER BLVD (817)-847-0200
   12. WESTERN CENTER EYE CARE 2720 WESTERN CENTER BLVD (817)-847-9000
   13. SUBWAY 2720 WESTERN CENTER BLVD (817)-847-1705
   14. FRED'S TEXAS 2730 WESTERN CENTER BLVD (817)-232-0111
   15. MAX TAN 2730 WESTERN CENTER BLVD (817)-234-9889
   16. THE SALAD BOWL 2730 WESTERN CENTER BLVD (817)-232-5500
   17. 5 STAR NAIL SPA 2730 WESTERN CENTER BLVD (817)-232-3259
   18. POWERNAPS 2740 WESTERN CENTER BLVD (817)-231-5110
   19. HEAVENLY BLISS FULL SERVICE SPA 2740 WESTERN CENTER BLVD (817)-634-5265
   20. WOODS INSURANCE 2740 WESTERN CENTER BLVD (817)-232-1580
   21. AN ZEN ASIAN BISTRO AND SUSHI BAR 2740 WESTERN CENTER BLVD (817)-234-9988
   22. FIRST DONUTS 2740 WESTERN CENTER BLVD (817)-306-1755
   23. BARDO'S PIZZA & PASTA 2740 WESTERN CENTER BLVD (817)-306-4478
   24. BURLINGTON NORTHERN SANTA FE 2803 WESTERN CENTER BLVD (817)-795-2673
   25. ARMORED SELF STORAGE 2950 WESTERN CENTER BLVD (817)-232-5050
   26. COWTOWN COMMERCIAL REAL ESTATE 2900 WESTERN CENTER BLVD (817)-847-9183
   27. SMOOTHIE KING 2901 WESTERN CENTER BLVD (817)-847-8083
   28. KNOCKOUTS HAIRCUTS FOR MEN 2901 WESTERN CENTER BLVD (817)-232-9965
   29. METRO PCS 2901 WESTERN CENTER BLVD (972)-418-1981
   30. FIREHOUSE SUBS 2901 WESTERN CENTER BLVD (817)-232-4000
   31. MK'S SUSHI 2901 FAIR DRIVE (817)-306-0003
   32. WESTERN NAIL SPA 2901 FAIR DRIVE (817)-439-3411
   33. THE EXCHANGE GOLD STORE 2901 FAIR DRIVE (817)-232-1245
   34. VAPORESCENCE 2901 FAIR DRIVE (817)-847-7474
   35. LEGEND BANK 3001 WESTERN CENTER BLVD (817)-306-8937
   36. EXPRESS EMPLOYMENT PROFESSIONALS 3025 WESTERN CENTER BLVD (817)-281-1570
   37. POPEYE'S 3021 WESTERN CENTER BLVD (817)-232-9688
   38. MCDONALD'S 3041 WESTERN CENTER BLVD (817)-232-8027

3. COORDINATE A TEST SHUT DOWN WITH JOHN KASAVICH AND THE CITY INSPECTOR TO ENSURE THAT THE FOLLOWING DEVELOPMENT IS SERVED FROM MARK IV PARKWAY WHEN VALVE WL B-12 IS CLOSED.

   1. IRONWOOD CROSSING APARTMENTS 2600 WESTERN CENTER BLVD - LEO HERNANDEZ (214)-783-2264

4. PROPERTIES AFFECTED BY THE SHUTDOWN WILL BE OUT OF SERVICE FOR THE DURATION OF THE CONNECTION. SHUT DOWN SHALL TAKE PLACE FOR A MAXIMUM OF 8 HOURS AND SHALL BE SCHEDULED BASED ON TIMES COORDINATED WITH BUSINESS OWNERS.
5. CLOSE VALVES WL B-10, WL B-11, WL B-12, WL B-13, WL B-14, WL B-15, WL B-16, WL B-17 AND WL B-18.
6. CONNECT TO EXISTING WATER LINE WEST OF IH 35W AT WATER LINE B STATION 0+00.
7. PLACE 24-INCH WATER LINE BACK IN SERVICE FROM THE WEST.
8. CUT AND PLUG EXISTING 24-INCH WATER LINE, REMOVE AND SALVAGE EXISTING GATE VALVES AND OTHER APPURTENANCES. ABANDON OR REMOVE PIPE PER SPECIFICATIONS.
9. COMPLETE SURFACE RESTORATION.

STATE OF TEXAS
RYAN D. OWEN
109586
LICENSED
PROFESSIONAL ENGINEER
PE
7/13/2012

Kimley-Horn and Associates, Inc.
TEXAS REGISTERED ENGINEERING FIRM F-928

Texas Department of Transportation
© 2012

IH 35W FROM NORTH TARRANT PKWY TO IH 820

IH 35W UTILITY RELOCATIONS
SHUTDOWN AND SEQUENCING NOTES

SHEET 5 OF 54

DESIGN	FED. RD. DIV. NO.	FEDERAL AID PROJECT NO.		HIGHWAY NO.
KHA	6	(SEE TITLE SHEET)		IH 35W
GRAPHICS KHA	STATE	DISTRICT	COUNTY	SHEET NO.
CHECK KHA	TEXAS	FTW	TARRANT	1343
CHECK	CONTROL	SECTION	JOB	
KHA	0014	16	255, ETC.	

DRAWING DATE: 7/13/2012 FILENAME: S3BPUTIL*NOTES05.dgn

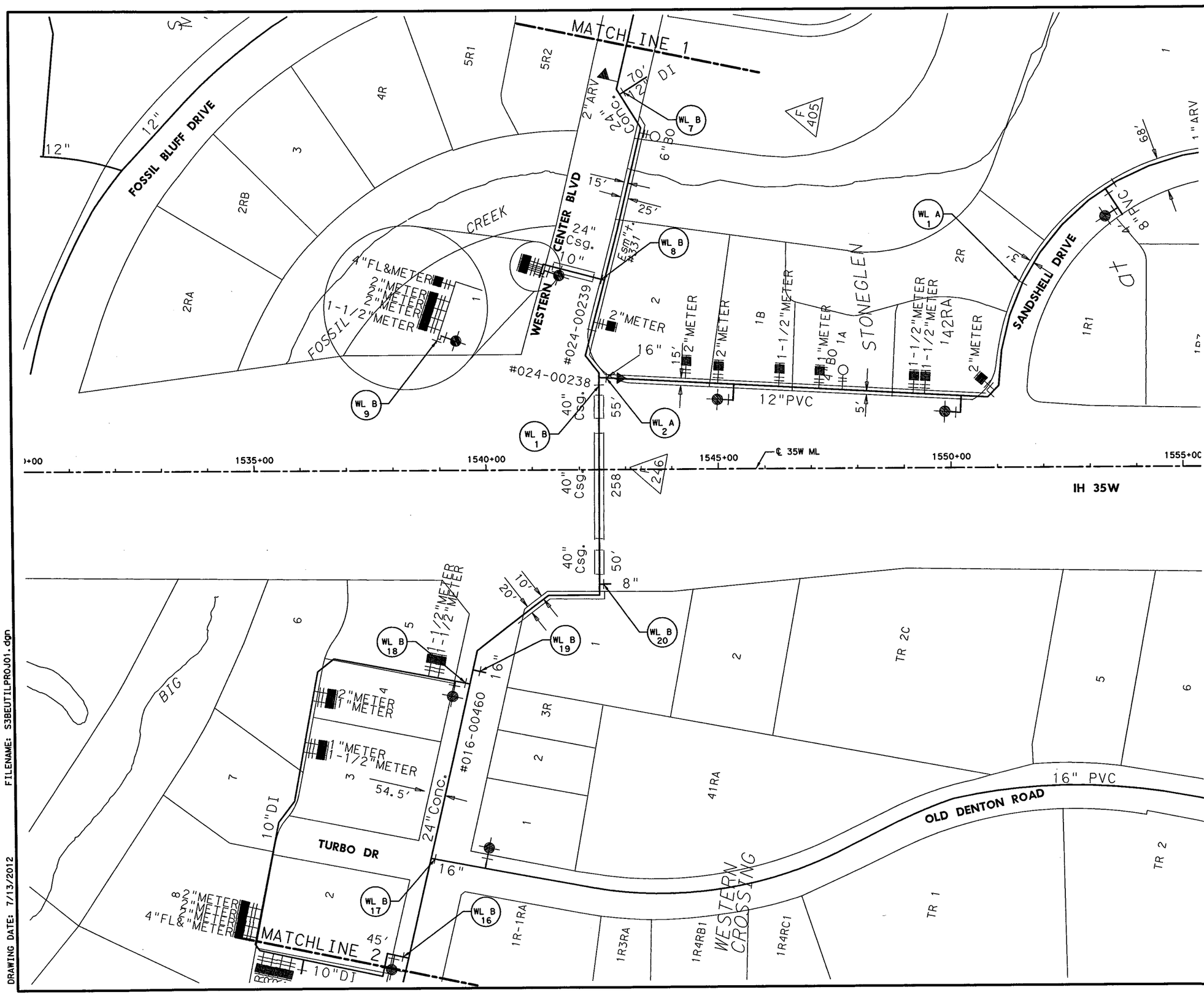

0' 50' 100' 200'

SCALE IN FEET

CITY OF FORT WORTH MAP # - 2054-432

LEGEND:

- WL X / X — ISOLATION VALVE WITH LINE REFERENCE AND SHUTDOWN AND SEQUENCING ORDER
- WATER METER
- BLOW OFF VALVE
- AIR RELEASE VALVE
- FIRE HYDRANT
- ISOLATION VALVE

STATE OF TEXAS
RYAN D. OWEN
109586
LICENSED PROFESSIONAL ENGINEER
7/13/2012

Kimley-Horn and Associates, Inc.
TEXAS REGISTERED ENGINEERING FIRM F-928

Texas Department of Transportation
© 2012

IH 35W FROM NORTH TARRANT PKWY TO IH 820

IH 35W UTILITY RELOCATIONS

EXISTING WATER LINE AND ISOLATION VALVE LOCATION MAP

SCALE: 1" = 200' SHEET 6 OF 54

DESIGN	FED. RD. DIV. NO.	FEDERAL AID PROJECT NO.		HIGHWAY NO.
KHA	6	(SEE TITLE SHEET)		IH 35W
GRAPHICS	STATE	DISTRICT	COUNTY	SHEET NO.
KHA	TEXAS	FTW	TARRANT	1344
CHECK	CONTROL	SECTION	JOB	
KHA	0014	16	255, ETC.	

DRAWING DATE: 7/13/2012 FILENAME: S3BEUTILPROJ01.dgn

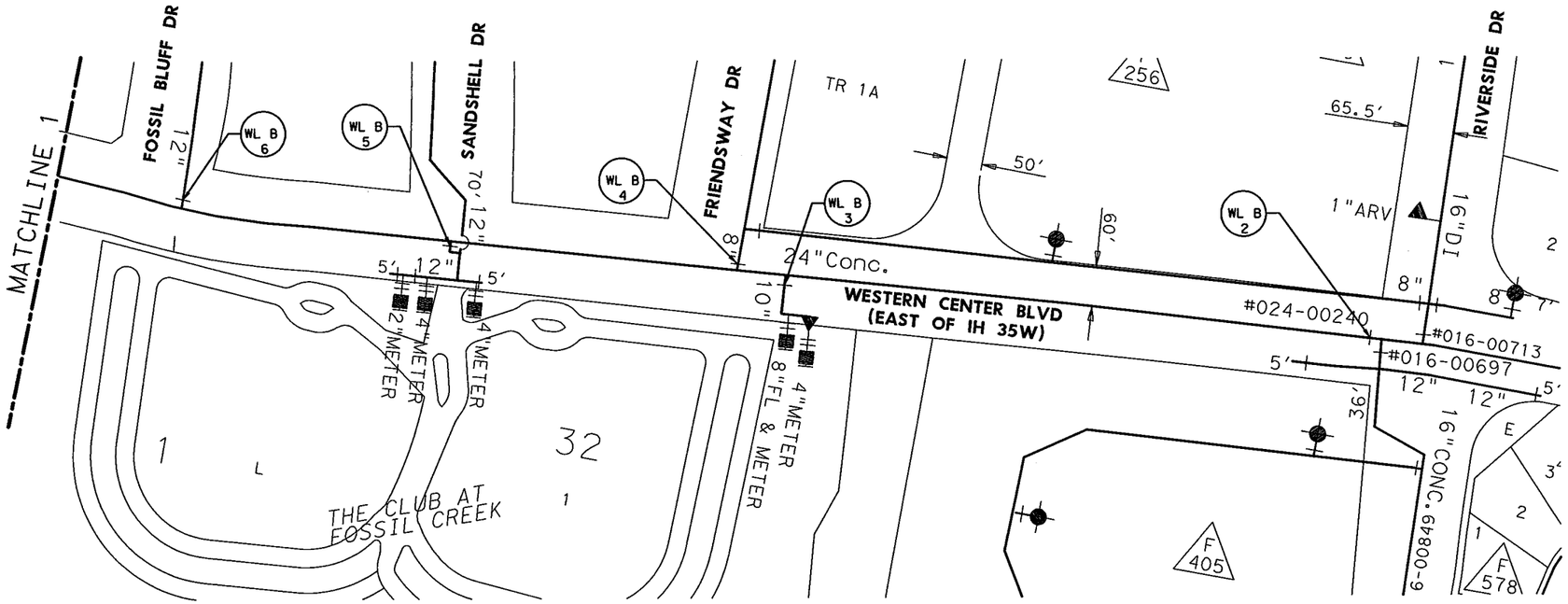

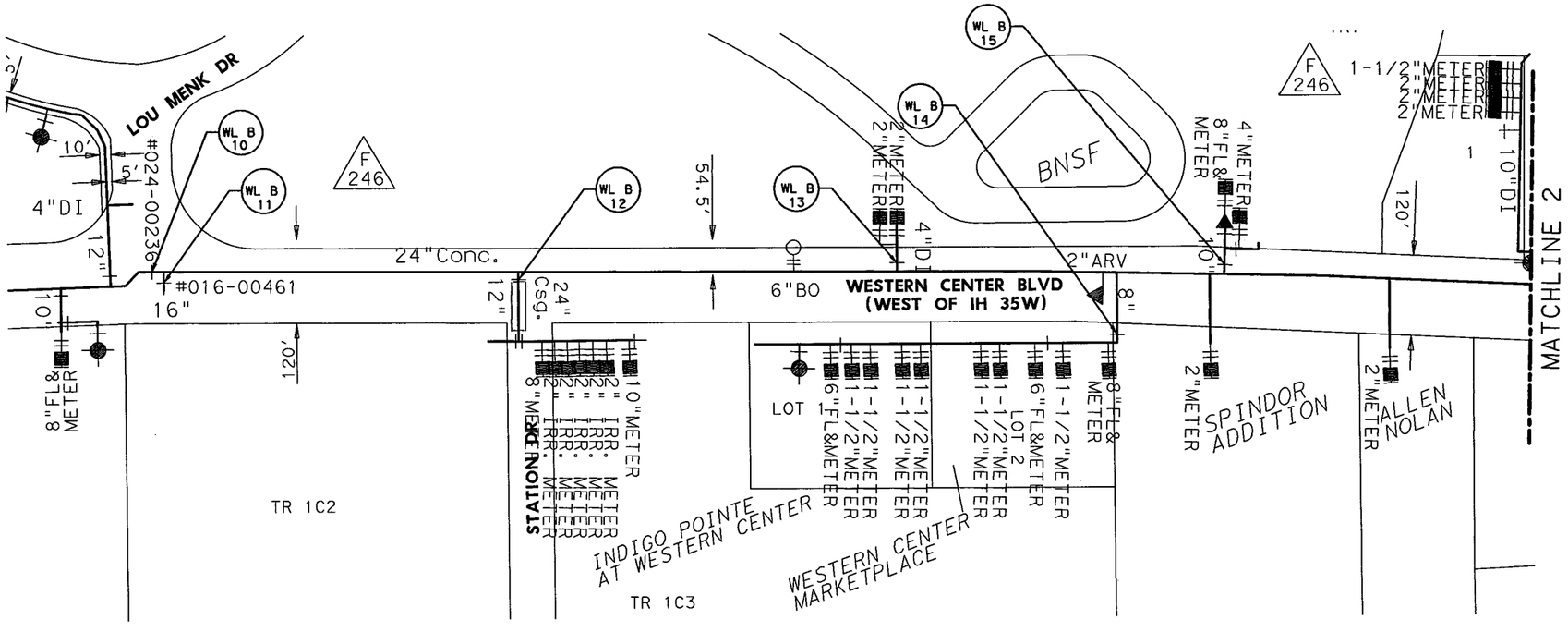

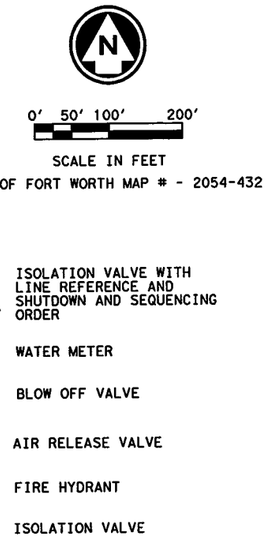

STATE OF TEXAS
RYAN D. OWEN
109586
LICENSED
PROFESSIONAL ENGINEER
7/13/2012

Kimley-Horn and Associates, Inc.
TEXAS REGISTERED ENGINEERING FIRM F-928

Texas Department of Transportation
© 2012

IH 35W FROM NORTH TARRANT PKWY TO IH 820

IH 35W UTILITY RELOCATIONS

EXISTING WATER LINE AND ISOLATION VALVE LOCATION MAP

SCALE: 1" = 200' SHEET 7 OF 54

DESIGN	FED. RD. DIV. NO.	FEDERAL AID PROJECT NO.		HIGHWAY NO.
KHA	6	(SEE TITLE SHEET)		IH 35W
GRAPHICS KHA	STATE	DISTRICT	COUNTY	SHEET NO.
CHECK KHA	TEXAS	FTW	TARRANT	1345
CHECK KHA	CONTROL	SECTION	JOB	
	0014	16	255, ETC.	

FILENAME: S3BEUTILPROJ02.dgn

DRAWING DATE: 7/13/2012

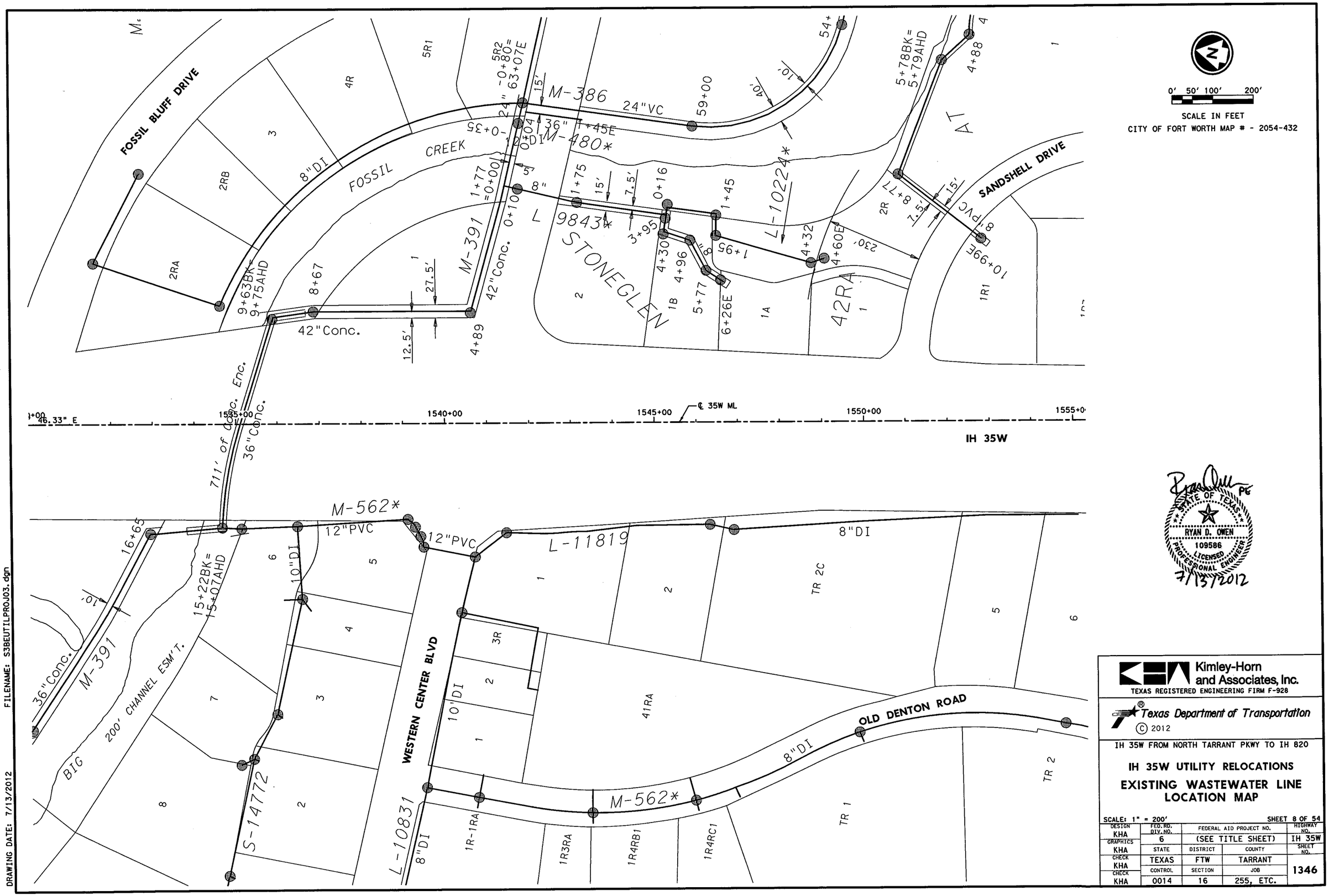

Kimley-Horn and Associates, Inc.
TEXAS REGISTERED ENGINEERING FIRM F-928

Texas Department of Transportation
© 2012

IH 35W FROM NORTH TARRANT PKWY TO IH 820

IH 35W UTILITY RELOCATIONS

EXISTING WASTEWATER LINE LOCATION MAP

SCALE: 1" = 200' SHEET 8 OF 54

DESIGN	FED. RD. DIV. NO.	FEDERAL AID PROJECT NO.		HIGHWAY NO.
KHA	6	(SEE TITLE SHEET)		IH 35W
GRAPHICS KHA	STATE	DISTRICT	COUNTY	SHEET NO.
CHECK KHA	TEXAS	FTW	TARRANT	1346
CHECK KHA	CONTROL	SECTION	JOB	
	0014	16	255, ETC.	

FILENAME: S3BEUTILPROJ03.dgn

DRAWING DATE: 7/13/2012

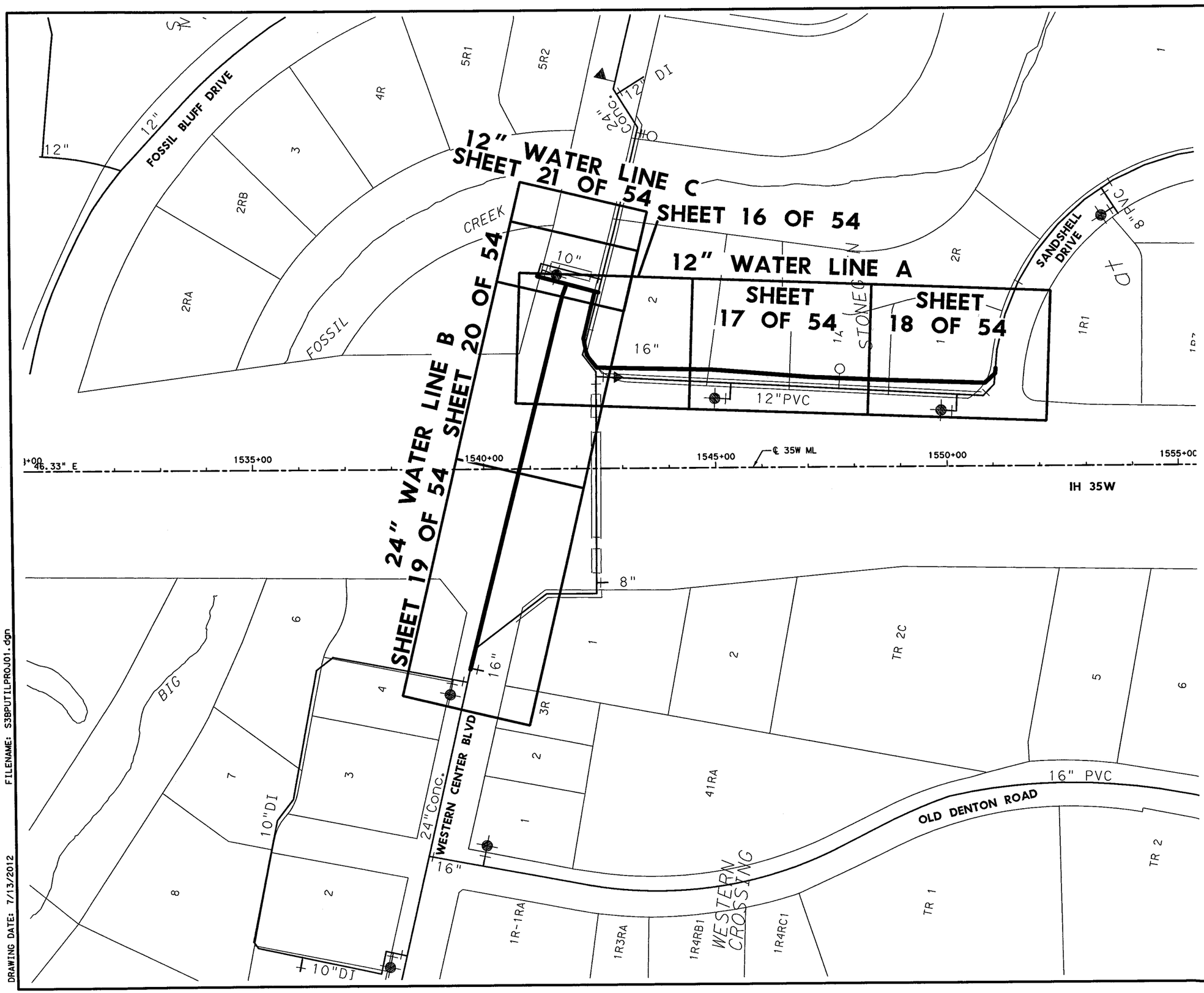

0' 50' 100' 200'

SCALE IN FEET

CITY OF FORT WORTH MAP # - 2054-432

STATE OF TEXAS
RYAN D. OWEN
109586
LICENSED
PROFESSIONAL ENGINEER
7/13/2012

Kimley-Horn and Associates, Inc.
TEXAS REGISTERED ENGINEERING FIRM F-928

Texas Department of Transportation
© 2012

IH 35W FROM NORTH TARRANT PKWY TO IH 820

IH 35W UTILITY RELOCATIONS

PROPOSED WATER LINE LOCATION MAP

SCALE: 1" = 200'

SHEET 9 OF 54

DESIGN	FED. RD. DIV. NO.	FEDERAL AID PROJECT NO.		HIGHWAY NO.
KHA	6	(SEE TITLE SHEET)		IH 35W
GRAPHICS	STATE	DISTRICT	COUNTY	SHEET NO.
KHA	TEXAS	FTW	TARRANT	1347
CHECK	CONTROL	SECTION	JOB	
KHA	0014	16	255, ETC.	

DRAWING DATE: 7/13/2012 FILENAME: S38PUTILPROJ01.dgn

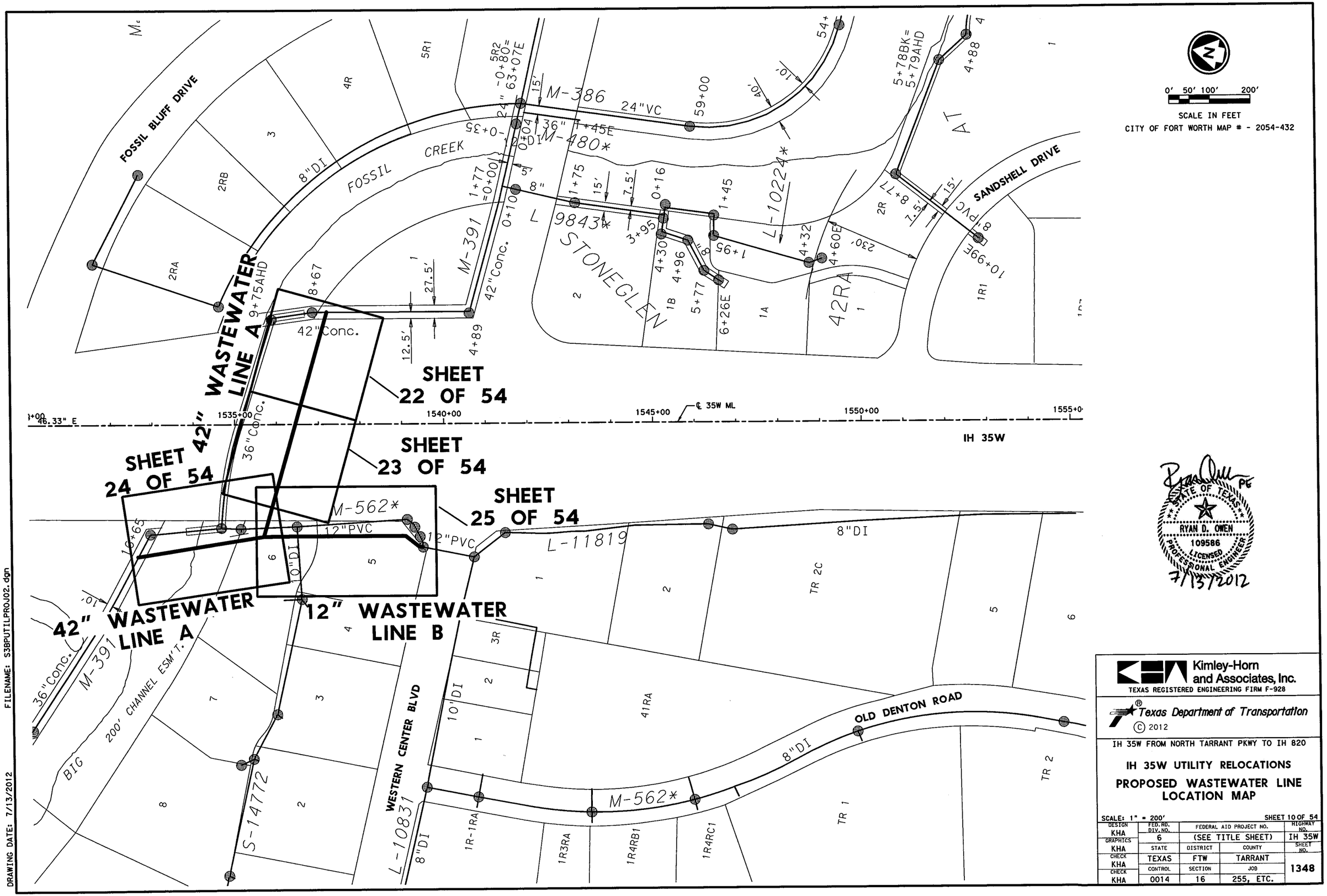

Kimley-Horn and Associates, Inc.
TEXAS REGISTERED ENGINEERING FIRM F-928

Texas Department of Transportation
© 2012

IH 35W FROM NORTH TARRANT PKWY TO IH 820

IH 35W UTILITY RELOCATIONS

PROPOSED WASTEWATER LINE LOCATION MAP

SCALE: 1" = 200' SHEET 10 OF 54

DESIGN	FED.RD. DIV.NO.	FEDERAL AID PROJECT NO.		HIGHWAY NO.
KHA	6	(SEE TITLE SHEET)		IH 35W
GRAPHICS	STATE	DISTRICT	COUNTY	SHEET NO.
KHA	TEXAS	FTW	TARRANT	
CHECK	CONTROL	SECTION	JOB	1348
KHA	0014	16	255, ETC.	

FILENAME: S38PUTILPROJ02.dgn

DRAWING DATE: 7/13/2012

0' 50' 100' 200'

SCALE IN FEET

CITY OF FORT WORTH MAP # - 2054-432

LEGEND:

HORIZONTAL AND VERTICAL CONTROL POINT

NOTES:
COORDINATES BASED ON THE TEXAS STATE PLANE COORDINATE SYSTEM, NAD-83 (CORS 2002), TEXAS CENTRAL ZONE (4202) AND ADJUSTED TO SURFACE USING A COMBINED SCALE FACTOR OF 1.00012. THE ELEVATIONS SHOWN ARE BASED ON THE NAVD-88 (CORS 2002) VERTICAL DATUM AND WER ESTABLISHED BY USING TXSG CORS STATION. ALL COORDINATES AND ELEVATIONS ARE DIPLAYED IN U.S. SURVEY FEET.

STATE OF TEXAS
RYAN D. OWEN
109586
LICENSED
PROFESSIONAL ENGINEER
7/13/2012

CONTROL POINT DESCRIPTION

CP #14- 5/8IN IR SAM ALUM CAP
N: 6999760.2920
E: 2332976.4710
ELEV: 620.76'

CP #2 - TXDOT BRASS CAP 220 0002
N: 6999369.8640
E: 2332994.2330
ELEV: 609.10'

CP #13- 5/8IN IR SAM ALUM CAP
N: 6998070.5930
E: 2333175.1610
ELEV: 610.61'

Kimley-Horn and Associates, Inc.
TEXAS REGISTERED ENGINEERING FIRM F-928

Texas Department of Transportation
© 2012

IH 35W FROM NORTH TARRANT PKWY TO IH 820

IH 35W UTILITY RELOCATIONS
CONTROL POINT LOCATIONS FOR PROPOSED WATER AND WASTEWATER LINES

SCALE: 1" = 200'

SHEET 11 OF 54

DESIGN	FED. RD. DIV. NO.	FEDERAL AID PROJECT NO.		HIGHWAY NO.
KHA	6	(SEE TITLE SHEET)		IH 35W
GRAPHICS KHA	STATE	DISTRICT	COUNTY	SHEET NO.
CHECK KHA	TEXAS	FTW	TARRANT	1349
CHECK KHA	CONTROL	SECTION	JOB	
	0014	16	255, ETC.	

FILENAME: S3BPUTILCONTROL01.dgn

DRAWING DATE: 7/13/2012

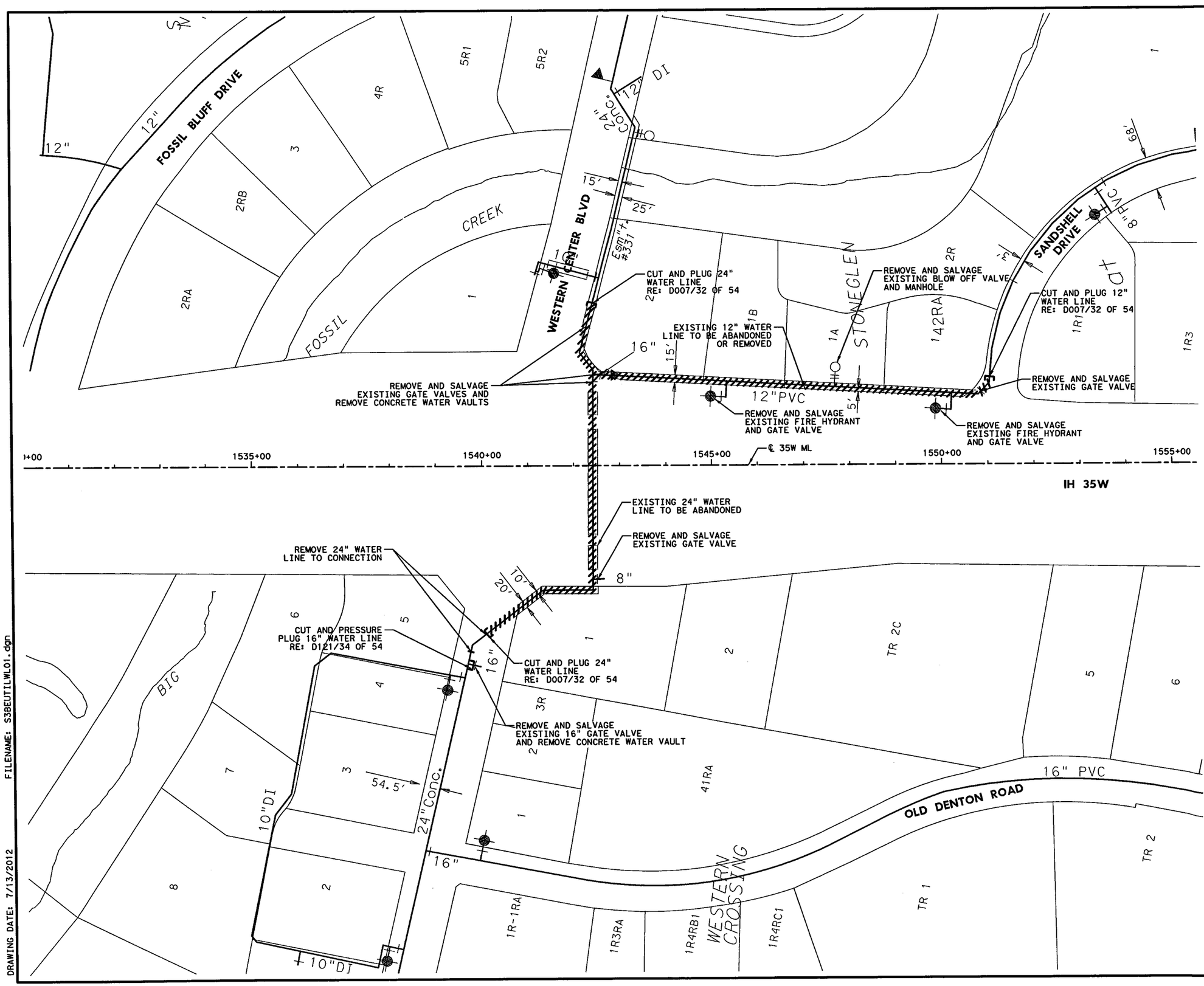

0' 50' 100' 200'

SCALE IN FEET

CITY OF FORT WORTH MAP # - 2054-432

NOTES:
1. PROVIDE WATER LINE ABANDONMENET PLUGS PER DETAIL D007/32 OF 54 AT ALL LOCATIONS WHERE WATER LINE APPURTENANCES ARE REMOVED, AND ADJACENT WATER LINE IS ABANDONED WITH GROUT.

STATE OF TEXAS
RYAN D. OWEN
109586
LICENSED
PROFESSIONAL ENGINEER
7/13/2012

Kimley-Horn and Associates, Inc.
TEXAS REGISTERED ENGINEERING FIRM F-928

Texas Department of Transportation
© 2012

IH 35W FROM NORTH TARRANT PKWY TO IH 820

IH 35W UTILITY RELOCATIONS

EXISTING WATER LINES TO BE ABANDONED

SCALE: 1" = 200' SHEET 12 OF 54

DESIGN	FED. RD. DIV. NO.	FEDERAL AID PROJECT NO.		HIGHWAY NO.
KHA	6	(SEE TITLE SHEET)		IH 35W
GRAPHICS	STATE	DISTRICT	COUNTY	SHEET NO.
KHA	TEXAS	FTW	TARRANT	1350
CHECK	CONTROL	SECTION	JOB	
KHA	0014	16	255, ETC.	

FILENAME: S38EUTILWL01.dgn

DRAWING DATE: 7/13/2012

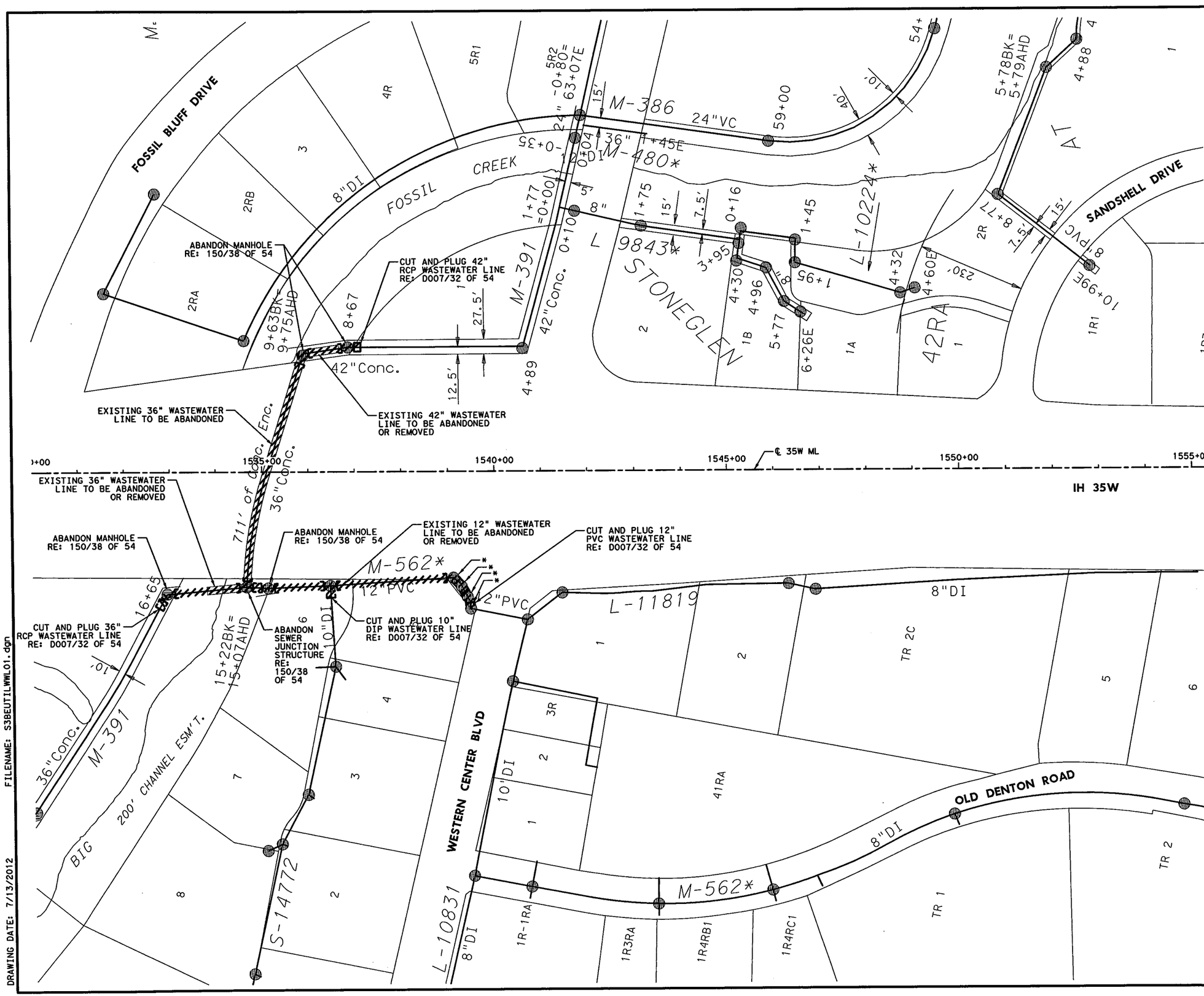

0' 50' 100' 200'

SCALE IN FEET

CITY OF FORT WORTH MAP # - 2054-432

LEGEND:

* REMOVE WASTEWATER MANHOLE/JUNCTION STRUCTURE

NOTES:
1. PROVIDE WASTEWATER LINE ABANDONMENET PLUGS PER DETAIL D007/32 OF 54 AT ALL LOCATIONS WHERE WASTE WATER LINE APPURTENANCES ARE REMOVED, AND ADJACENT WASTE WATER LINE IS ABANDONED WITH GROUT.

STATE OF TEXAS
RYAN D. OWEN
109586
LICENSED
PROFESSIONAL ENGINEER
7/13/2012

Kimley-Horn and Associates, Inc.
TEXAS REGISTERED ENGINEERING FIRM F-928

Texas Department of Transportation
© 2012

IH 35W FROM NORTH TARRANT PKWY TO IH 820

IH 35W UTILITY RELOCATIONS

EXISTING WASTEWATER LINES TO BE ABANDONED

SCALE: 1" = 200' SHEET 13 OF 54

DESIGN	FED. RD. DIV. NO.	FEDERAL AID PROJECT NO.		HIGHWAY NO.
KHA	6	(SEE TITLE SHEET)		IH 35W
GRAPHICS	STATE	DISTRICT	COUNTY	SHEET NO.
KHA	TEXAS	FTW	TARRANT	
CHECK	CONTROL	SECTION	JOB	1351
KHA	0014	16	255, ETC.	

FILENAME: S3BEUTILWWL01.dgn

DRAWING DATE: 7/13/2012

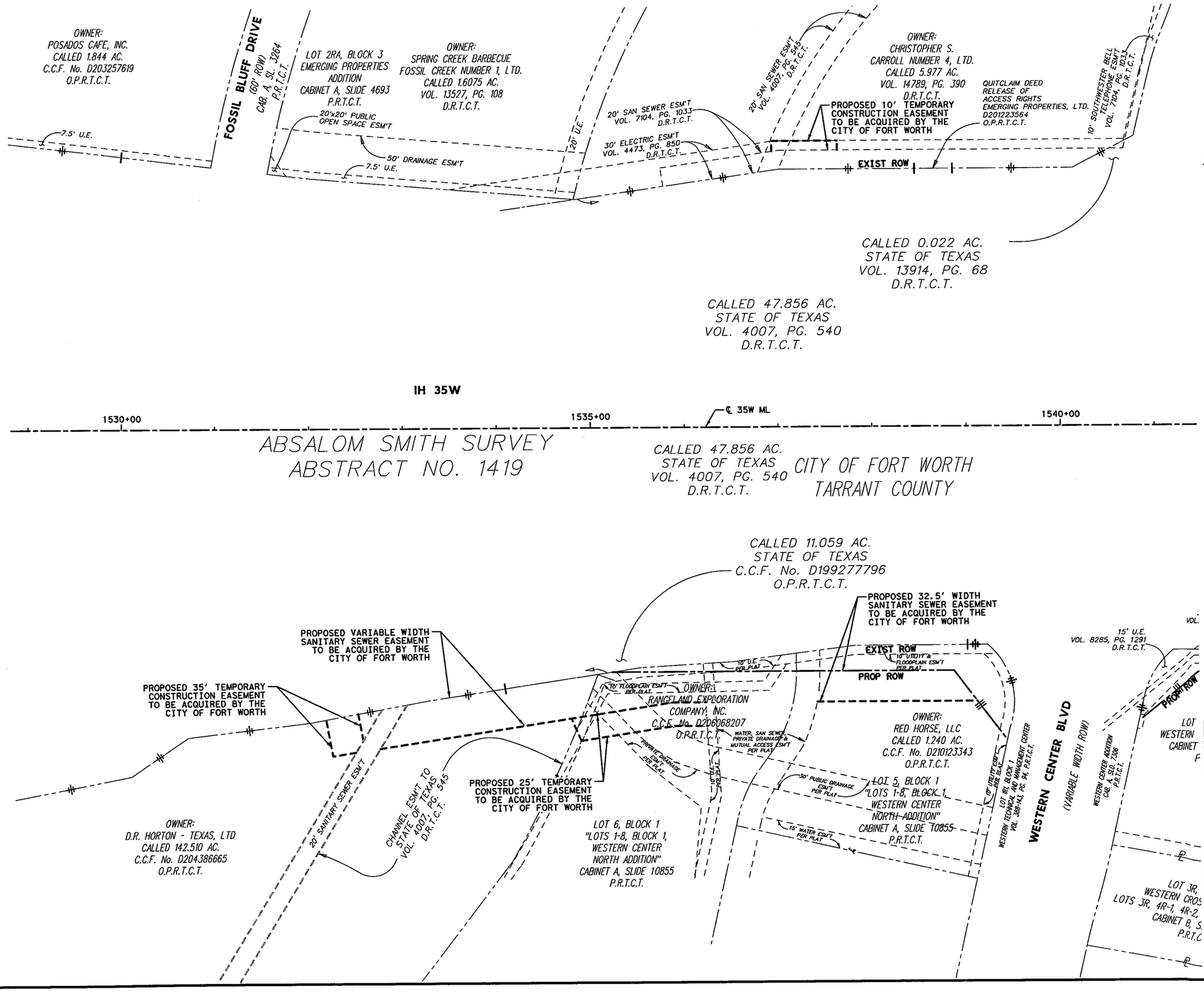

0' 25' 50' 100'

SCALE IN FEET

CITY OF FORT WORTH MAP # - 2054-432

LEGEND:

- - - - EXISTING EASEMENTS

— — — — PROPOSED EASEMENTS

NOTES:

1. CONTRACTOR SHALL COORDINATE WITH THE CITY OF FORT WORTH TO ENSURE THAT ALL PROPOSED EASEMENTS HAVE BEEN ACQUIRED PRIOR TO CONSTRUCTION

2. PRIOR TO CONSTRUCTION CONTRACTOR SHALL STAKE ALL PERMANENT EASEMENTS, TEMPORARY CONSTRUCTION EASEMENTS AND RIGHT-OF-WAY IN THE AREA OF WORK.

STATE OF TEXAS
RYAN D. OWEN
109586
LICENSED
PROFESSIONAL ENGINEER
7/13/2012

Kimley-Horn and Associates, Inc.
TEXAS REGISTERED ENGINEERING FIRM F-928

Texas Department of Transportation
© 2012

IH 35W FROM NORTH TARRANT PKWY TO IH 820

IH 35W UTILITY RELOCATIONS
OVERALL LOCATION MAP SHOWING PERMANENT AND TEMPORARY CONTRUCTION EASEMENTS

SCALE: 1" = 100'

SHEET 14 OF 54

DESIGN	FED. RD. DIV. NO.	FEDERAL AID PROJECT NO.		HIGHWAY NO.
KHA	6	(SEE TITLE SHEET)		IH 35W
GRAPHICS	STATE	DISTRICT	COUNTY	SHEET NO.
KHA	TEXAS	FTW	TARRANT	1352
CHECK	CONTROL	SECTION	JOB	
KHA	0014	16	255, ETC.	

DRAWING DATE: 7/13/2012

FILENAME: S3BPUTILEASEMENT*01.dgn

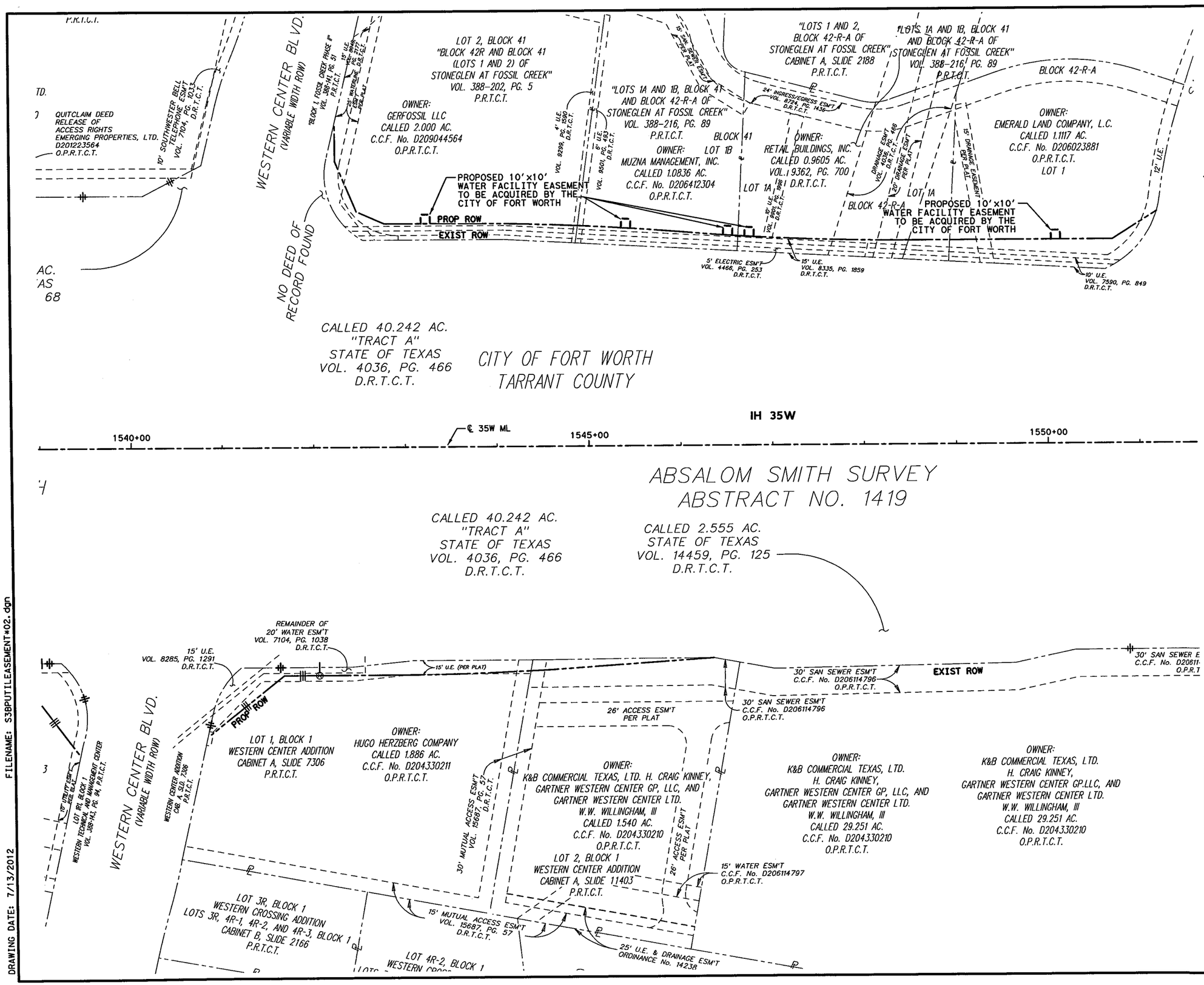

0' 25' 50' 100'

SCALE IN FEET

CITY OF FORT WORTH MAP # - 2054-432

LEGEND:

- - - - EXISTING EASEMENTS

— — — — PROPOSED EASEMENTS

NOTES:
1. CONTRACTOR SHALL COORDINATE WITH THE CITY OF FORT WORTH TO ENSURE THAT ALL PROPOSED EASEMENTS HAVE BEEN ACQUIRED PRIOR TO CONSTRUCTION

2. PRIOR TO CONSTRUCTION CONTRACTOR SHALL STAKE ALL PERMANENT EASEMENTS, TEMPORARY CONSTRUCTION EASEMENTS AND RIGHT-OF-WAY IN THE AREA OF WORK.

STATE OF TEXAS
RYAN D. OWEN
109586
LICENSED
PROFESSIONAL ENGINEER
7/13/2012

Kimley-Horn and Associates, Inc.
TEXAS REGISTERED ENGINEERING FIRM F-928

Texas Department of Transportation
© 2012

IH 35W FROM NORTH TARRANT PKWY TO IH 820
IH 35W UTILITY RELOCATIONS
OVERALL LOCATION MAP SHOWING PERMANENT AND TEMPORARY CONTRUCTION EASEMENTS

SCALE: 1" = 100' SHEET 15 OF 54

DESIGN	FED. RD. DIV. NO.	FEDERAL AID PROJECT NO.		HIGHWAY NO.
KHA	6	(SEE TITLE SHEET)		IH 35W
GRAPHICS	STATE	DISTRICT	COUNTY	SHEET NO.
KHA	TEXAS	FTW	TARRANT	1353
CHECK	CONTROL	SECTION	JOB	
KHA	0014	16	255, ETC.	

FILENAME: S38PUTILEASEMENT*02.dgn

DRAWING DATE: 7/13/2012

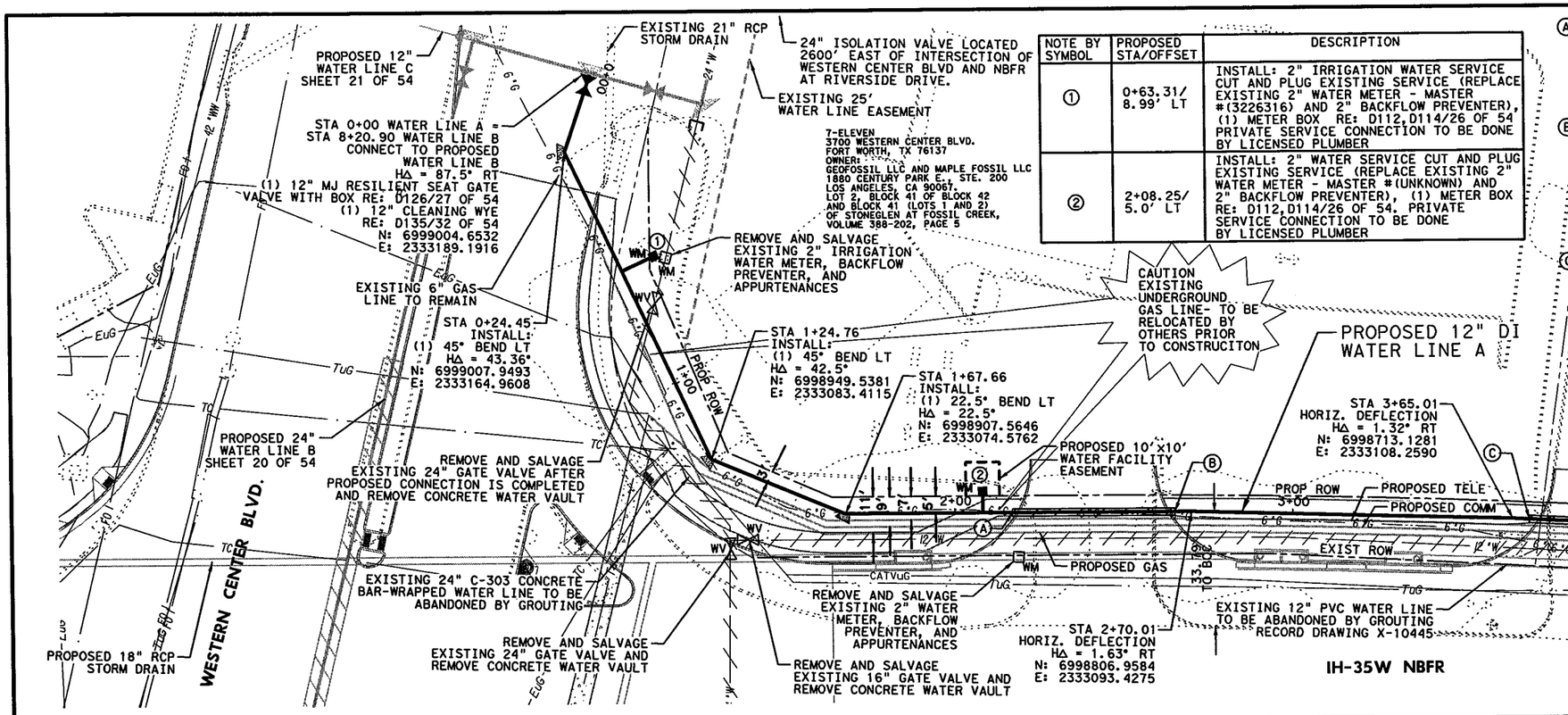

NOTE BY SYMBOL	PROPOSED STA/OFFSET	DESCRIPTION
①	0+63.31/ 8.99' LT	INSTALL: 2" IRRIGATION WATER SERVICE CUT AND PLUG EXISTING SERVICE (REPLACE EXISTING 2" WATER METER - MASTER #(3226316) AND 2" BACKFLOW PREVENTER), (1) METER BOX RE: D112,D114/26 OF 54 PRIVATE SERVICE CONNECTION TO BE DONE BY LICENSED PLUMBER
②	2+08.25/ 5.0' LT	INSTALL: 2" WATER SERVICE CUT AND PLUG EXISTING SERVICE (REPLACE EXISTING 2" WATER METER - MASTER #(UNKNOWN) AND 2" BACKFLOW PREVENTER), (1) METER BOX RE: D112,D114/26 OF 54. PRIVATE SERVICE CONNECTION TO BE DONE BY LICENSED PLUMBER

Ⓐ STA 2+17.01
BEGIN 12" WATER LINE BY OTHER THAN OPEN CUT WITH 24" STEEL CASING WITH STAINLESS STEEL CASING SPACERS
RE: D108/29 OF 54, D106/30 OF 54
N: 6998859.0558
E: 2333083.6656

Ⓑ STA 2+65.01
END 12" WATER LINE BY OTHER THAN OPEN CUT WITH 24" STEEL CASING WITH STAINLESS STEEL CASING SPACERS
RE: D108/29 OF 54, D106/30 OF 54
N: 6998811.8729
E: 2333092.5066

Ⓒ STA 3+70.01
BEGIN 12" WATER LINE BY OTHER THAN OPEN CUT WITH 24" STEEL CASING WITH STAINLESS STEEL CASING SPACERS
RE: D108/29 OF 54, D106/30 OF 54
N: 6998708.1729
E: 2333108.9258

HORZ 0' 10' 20' 40'
VERT 0' 5' 10'
SCALE IN FEET
CITY OF FORT WORTH MAP # 2054-432

LEGEND:

- EXISTING WATER METER
- EXISTING FIRE HYDRANT
- EXISTING WATER VALVE
- PROPOSED WATER METER
- PROPOSED FIRE HYDRANT
- PROPOSED WATER VALVE
- CASING OR TUNNEL LINER PLATE

SHEET NOTES:
1. THE LOCATION AND DIMENSIONS OF EXISTING UTILITES SHOWN ON THE PLANS ARE APPROXIMATE AND WERE OBTAINED FROM UTILITY COMPANY RECORDS. DEPTH OF PRIVATE UTILITES WERE NOT PROVIDED. IT IS THE CONTRACTOR'S SOLE RESPONSIBILITY TO VERIFY LOCATION, DEPTH AND DIMENSION OF EXISTING UTILITIES PRIOR TO CONSTRUCTION.
2. THE CONTRACTOR SHALL BE RESPONSIBLE FOR ALL NOTES OUTLINED ON THE UTILITY RELOCATION SHEETS.
3. SEE SOIL BORING LOCATIONS AND BORE LOG SHEETS FOR SOIL INFORMATION.
4. CONTRACTOR SHALL COORDINATE ALL METER LOCATIONS AND PRIVATE SERVICE CONNECTIONS WITH PROPERTY OWNERS.
5. SEE CONTROL POINT LOCATION SHEETS FOR HORIZONTAL AND VERTICAL CONTROL.

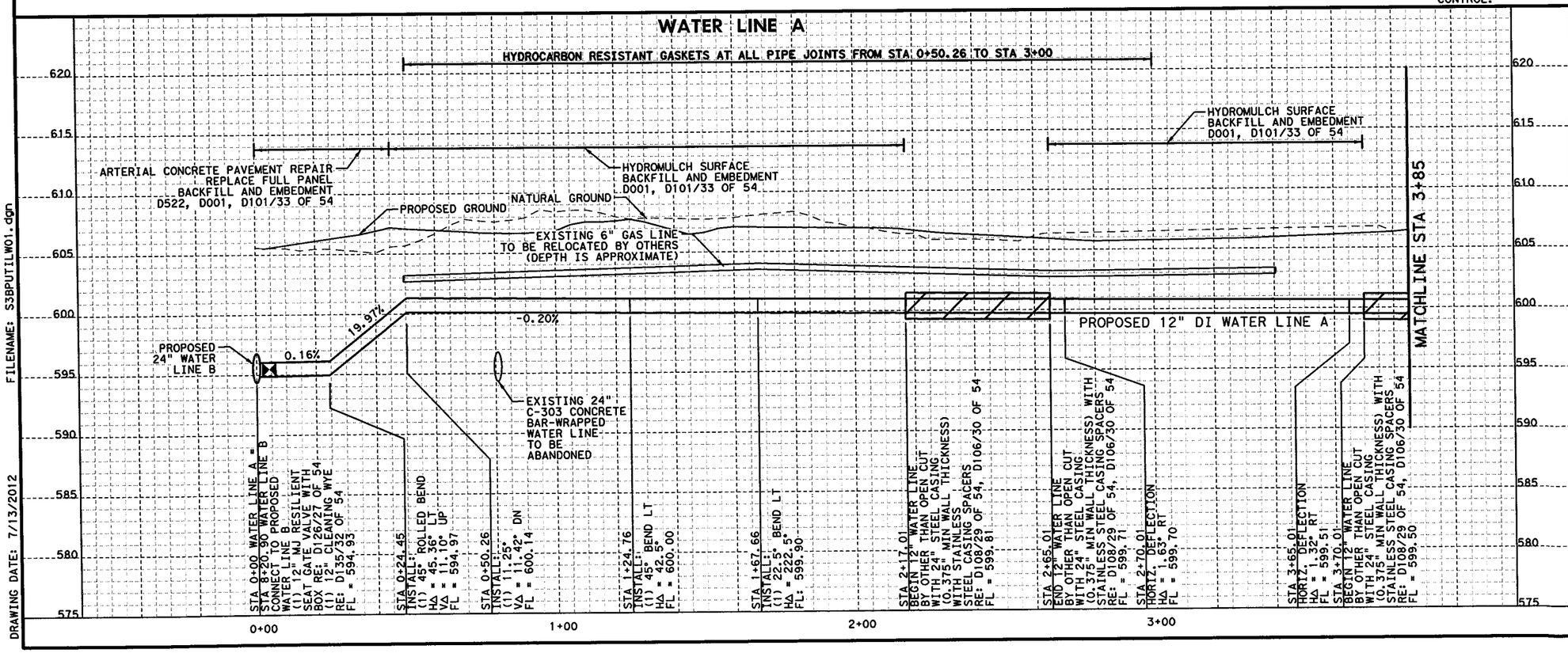

FILENAME: S3BPUTILW01.dgn

DRAWING DATE: 7/13/2012

RYAN D. OWEN
109586
LICENSED
PROFESSIONAL ENGINEER
STATE OF TEXAS
7/13/2012

Kimley-Horn and Associates, Inc.
TEXAS REGISTERED ENGINEERING FIRM F-928

Texas Department of Transportation
© 2012

IH 35W FROM NORTH TARRANT PKWY TO IH 820

IH 35W UTILITY RELOCATIONS
WATER LINE A
FROM BEGINNING TO STA. 3+85

SCALE: 1" = 40' H, 1" = 10' V — SHEET 16 OF 54

DESIGN	FED.RD. DIV.NO.	FEDERAL AID PROJECT NO.		HIGHWAY NO.
KHA	6	(SEE TITLE SHEET)		IH 35W
GRAPHICS	STATE	DISTRICT	COUNTY	SHEET NO.
KHA	TEXAS	FTW	TARRANT	1354
CHECK	CONTROL	SECTION	JOB	
KHA	0014	16	255, ETC.	

NOTE BY SYMBOL	PROPOSED STA/OFFSET	DESCRIPTION
①	4+25.47/ 5.15' LT	INSTALL 2" WATER SERVICE CUT AND PLUG EXISTING SERVICE (REPLACE EXISTING 2" WATER METER - MASTER #(UNKNOWN) AND 2" BACKFLOW PREVENTER), (1) METER BOX RE: D112,D114/26 OF 54. PRIVATE SERVICE CONNECTION TO BE DONE BY LICENSED PLUMBER
②	5+37.44/ 4.99' LT	INSTALL 1-1/2" WATER SERVICE CUT AND PLUG EXISTING SERVICE (REPLACE EXISTING 1-1/2" WATER METER - MASTER #4321498 AND 1-1/2" BACKFLOW PREVENTER), (1) METER BOX RE: D112,D114/26 OF 54. PRIVATE SERVICE CONNECTION TO BE DONE BY LICENSED PLUMBER
③	5+60.80/ 4.98' LT	INSTALL 1" WATER SERVICE CUT AND PLUG EXISTING SERVICE (REPLACE EXISTING 1" WATER METER - SENSUS #69514864 AND 1" BACKFLOW PREVENTER), (1) METER BOX RE: D111,D113/26 OF 54. PRIVATE SERVICE CONNECTION TO BE DONE BY LICENSED PLUMBER

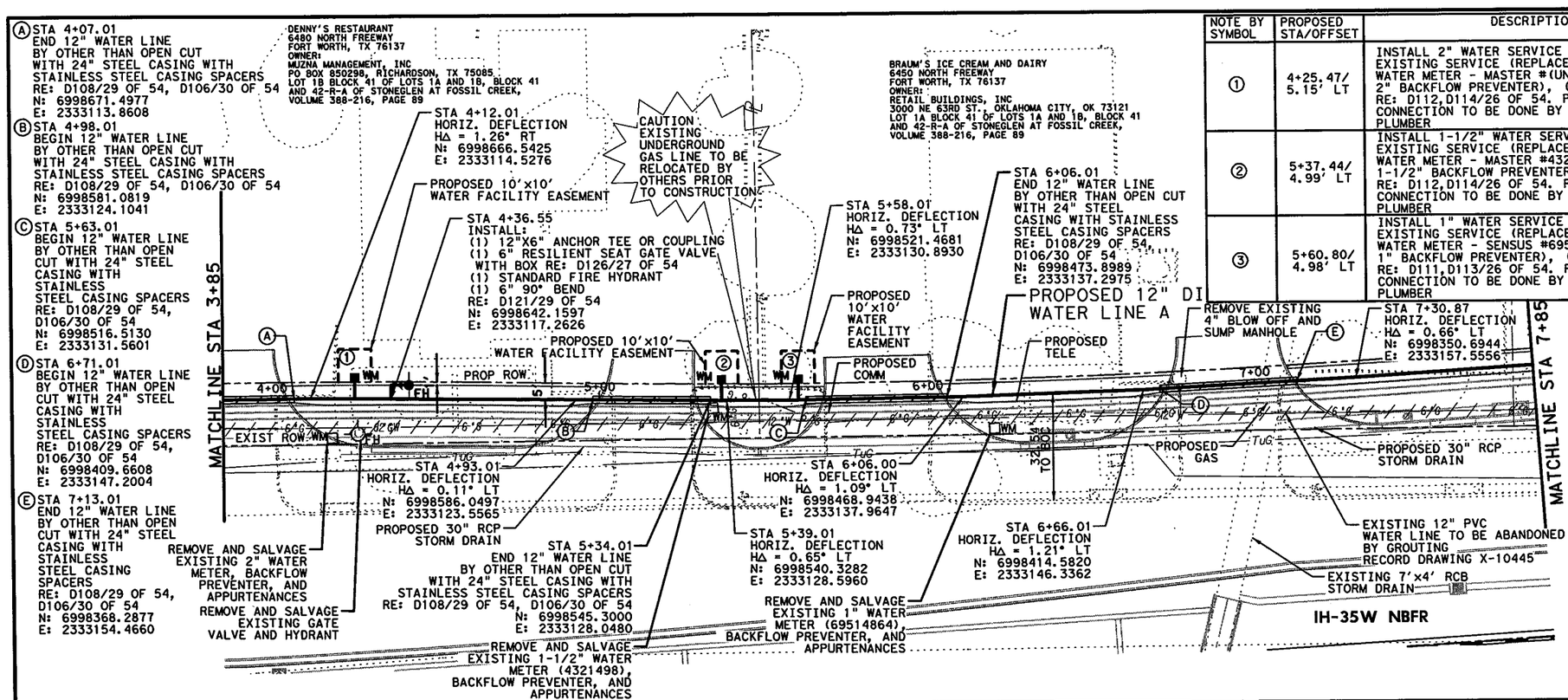

HORZ 0' 10' 20' 40'
VERT 0' 5' 10'
SCALE IN FEET
CITY OF FORT WORTH MAP # 2054-432

LEGEND:

- EXISTING WATER METER
- EXISTING FIRE HYDRANT
- EXISTING WATER VALVE
- PROPOSED WATER METER
- PROPOSED FIRE HYDRANT
- PROPOSED WATER VALVE
- CASING OR TUNNEL LINER PLATE

SHEET NOTES:
1. THE LOCATION AND DIMENSIONS OF EXISTING UTILITES SHOWN ON THE PLANS ARE APPROXIMATE AND WERE OBTAINED FROM UTILITY COMPANY RECORDS. DEPTH OF PRIVATE UTILITES WERE NOT PROVIDED. IT IS THE CONTRACTOR'S SOLE RESPONSIBILITY TO VERIFY LOCATION, DEPTH AND DIMENSION OF EXISTING UTILITIES PRIOR TO CONSTRUCTION.
2. THE CONTRACTOR SHALL BE RESPONSIBLE FOR ALL NOTES OUTLINED ON THE UTILITY RELOCATION SHEETS.
3. SEE SOIL BORING LOCATIONS AND BORE LOG SHEETS FOR SOIL INFORMATION.
4. CONTRACTOR SHALL COORDINATE ALL METER LOCATIONS AND PRIVATE SERVICE CONNECTIONS WITH PROPERTY OWNERS.
5. SEE CONTROL POINT LOCATION SHEETS FOR HORIZONTAL AND VERTICAL CONTROL.

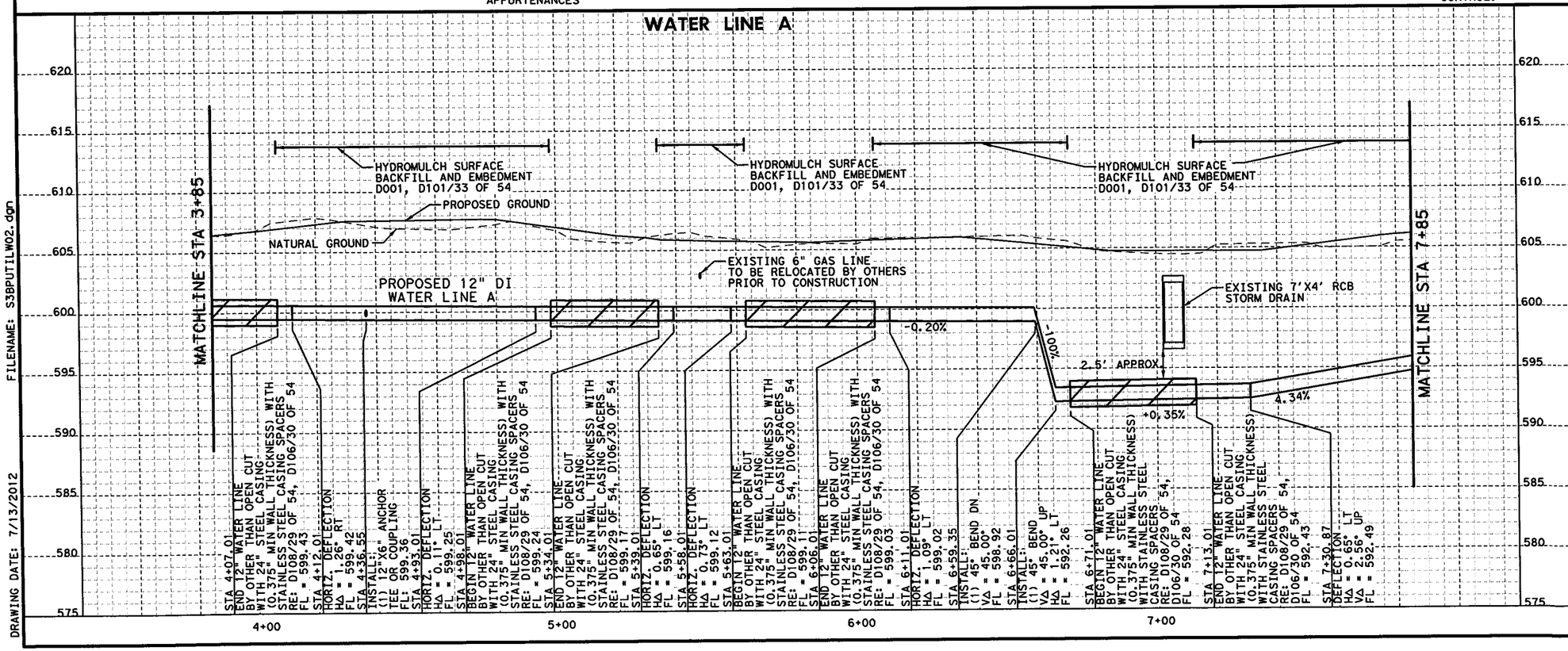

FILENAME: S38PUTILW02.dgn
DRAWING DATE: 7/13/2012

RYAN D. OWEN
109586
LICENSED PROFESSIONAL ENGINEER
STATE OF TEXAS
7/13/2012

Kimley-Horn and Associates, Inc.
TEXAS REGISTERED ENGINEERING FIRM F-928

Texas Department of Transportation
© 2012

IH 35W FROM NORTH TARRANT PKWY TO IH 820

IH 35W UTILITY RELOCATIONS
WATER LINE A
STA 3+85 TO STA 7+85

SCALE: 1" = 40' H, 1" = 10' V — SHEET 17 OF 54

DESIGN	FED.RD. DIV.NO.	FEDERAL AID PROJECT NO.		HIGHWAY NO.
KHA	6	(SEE TITLE SHEET)		IH 35W
GRAPHICS	STATE	DISTRICT	COUNTY	SHEET NO.
KHA	TEXAS	FTW	TARRANT	1355
CHECK	CONTROL	SECTION	JOB	
KHA	0014	16	255, ETC.	

Ⓐ STA 8+36.01
BEGIN 12" WATER LINE
BY OTHER THAN OPEN CUT
WITH 24" STEEL CASING WITH
STAINLESS STEEL CASING SPACERS
RE: D108/29 OF 54, D106/30 OF 54
N: 6998247.3598
E: 2333176.9182

Ⓑ STA 8+75.01
END 12" WATER LINE
BY OTHER THAN OPEN CUT
WITH 24" STEEL
CASING WITH STAINLESS STEEL
CASING SPACERS
RE: D108/29 OF 54, D106/30 OF 54
N: 6998209.0301
E: 2333184.1003

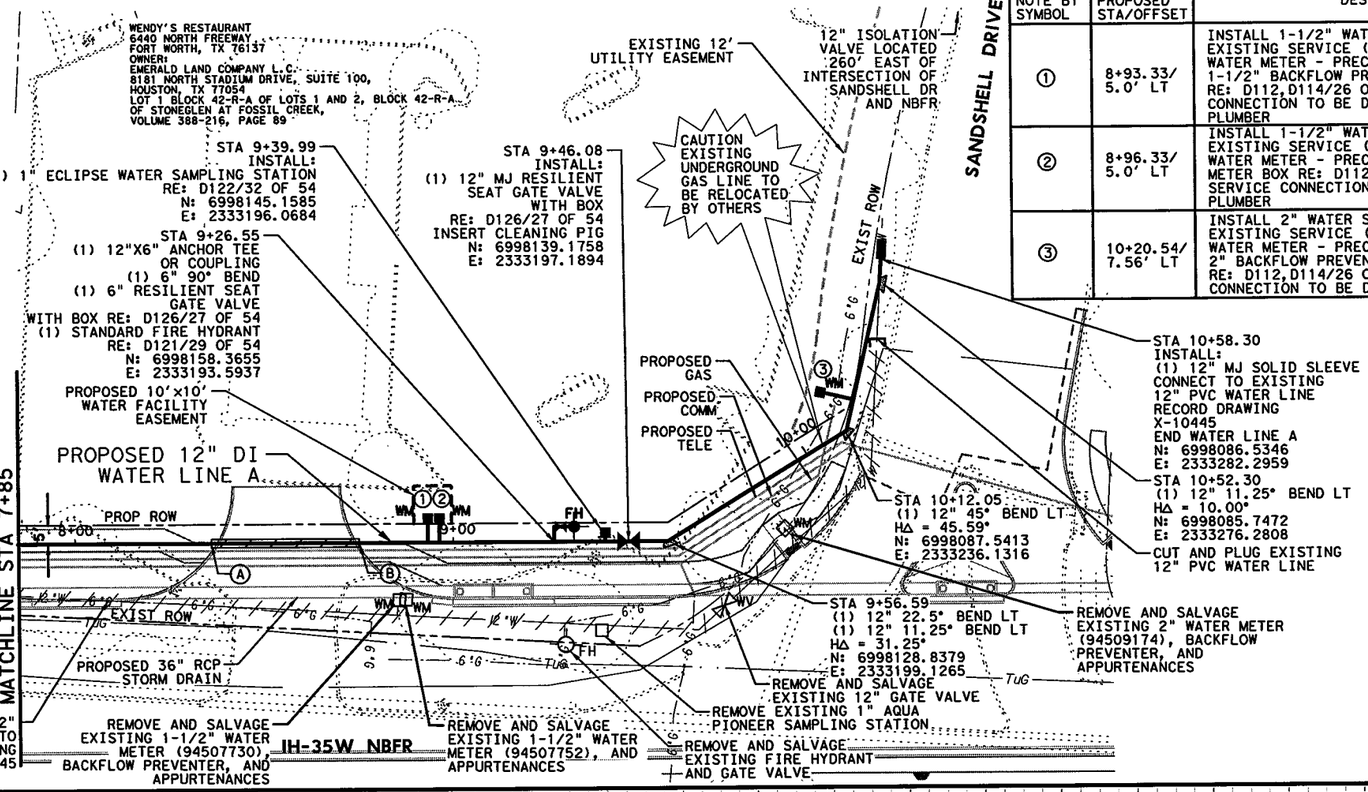

NOTE BY SYMBOL	PROPOSED STA/OFFSET	DESCRIPTION
①	8+93.33/ 5.0' LT	INSTALL 1-1/2" WATER SERVICE CUT AND PLUG EXISTING SERVICE (REPLACE EXISTING 1-1/2" WATER METER - PRECISION #94507730 AND 1-1/2" BACKFLOW PREVENTER), (1) METER BOX RE: D112,D114/26 OF 54. PRIVATE SERVICE CONNECTION TO BE DONE BY LICENSED PLUMBER
②	8+96.33/ 5.0' LT	INSTALL 1-1/2" WATER SERVICE CUT AND PLUG EXISTING SERVICE (REPLACE EXISTING 1-1/2" WATER METER - PRECISION #94507752), (1) METER BOX RE: D112,D114/26 OF 54. PRIVATE SERVICE CONNECTION TO BE DONE BY LICENSED PLUMBER
③	10+20.54/ 7.56' LT	INSTALL 2" WATER SERVICE CUT AND PLUG EXISTING SERVICE (REPLACE EXISTING 2" WATER METER - PRECISION #94509174 AND 2" BACKFLOW PREVENTER), (1) METER BOX RE: D112,D114/26 OF 54. PRIVATE SERVICE CONNECTION TO BE DONE BY LICENSED PLUMBER

HORZ 0' 10' 20' 40'
VERT 0' 5' 10'
SCALE IN FEET
CITY OF FORT WORTH MAP # 2054-432

LEGEND:

- EXISTING WATER METER
- EXISTING FIRE HYDRANT
- EXISTING WATER VALVE
- PROPOSED WATER METER
- PROPOSED FIRE HYDRANT
- PROPOSED WATER VALVE
- CASING OR TUNNEL LINER PLATE

SHEET NOTES:
1. THE LOCATION AND DIMENSIONS OF EXISTING UTILITES SHOWN ON THE PLANS ARE APPROXIMATE AND WERE OBTAINED FROM UTILITY COMPANY RECORDS. DEPTH OF PRIVATE UTILITES WERE NOT PROVIDED. IT IS THE CONTRACTOR'S SOLE RESPONSIBILITY TO VERIFY LOCATION, DEPTH AND DIMENSION OF EXISTING UTILITIES PRIOR TO CONSTRUCTION.
2. THE CONTRACTOR SHALL BE RESPONSIBLE FOR ALL NOTES OUTLINED ON THE UTILITY RELOCATION SHEETS.
3. SEE SOIL BORING LOCATIONS AND BORE LOG SHEETS FOR SOIL INFORMATION.
4. CONTRACTOR SHALL COORDINATE ALL METER LOCATIONS AND PRIVATE SERVICE CONNECTIONS WITH PROPERTY OWNERS.
5. SEE CONTROL POINT LOCATION SHEETS FOR HORIZONTAL AND VERTICAL CONTROL.

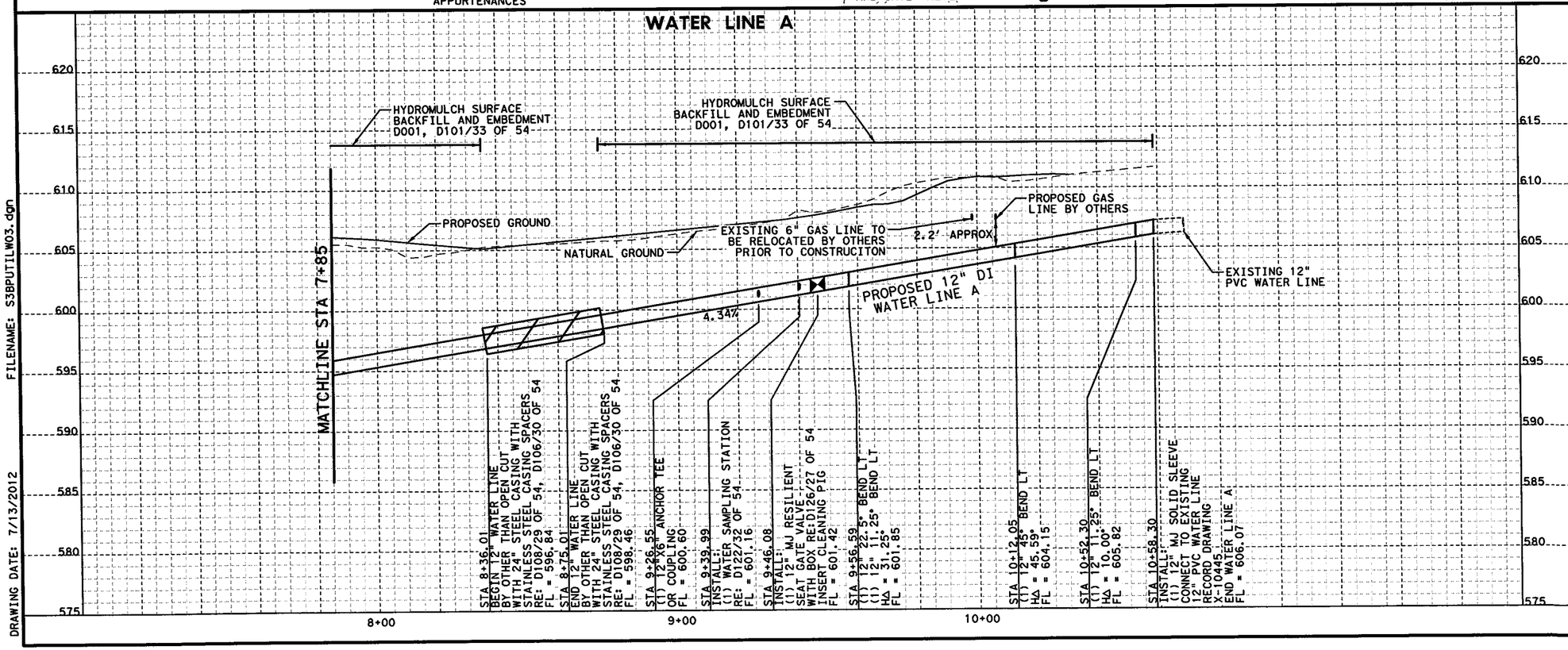

FILENAME: S3BPUTILW03.dgn

DRAWING DATE: 7/13/2012

STATE OF TEXAS
RYAN D. OWEN
109586
LICENSED
PROFESSIONAL ENGINEER
7/13/2012

Kimley-Horn and Associates, Inc.
TEXAS REGISTERED ENGINEERING FIRM F-928

Texas Department of Transportation
© 2012

IH 35W FROM NORTH TARRANT PKWY TO IH 820

IH 35W UTILITY RELOCATIONS
WATER LINE A
STA 7+85 TO END

SCALE: 1" = 40' H, 1" = 10' V — SHEET 18 OF 54

DESIGN	FED.RD. DIV.NO.	FEDERAL AID PROJECT NO.		HIGHWAY NO.
KHA	6	(SEE TITLE SHEET)		IH 35W
GRAPHICS KHA	STATE	DISTRICT	COUNTY	SHEET NO.
CHECK KHA	TEXAS	FTW	TARRANT	1356
CHECK KHA	CONTROL	SECTION	JOB	
	0014	16	255, ETC.	

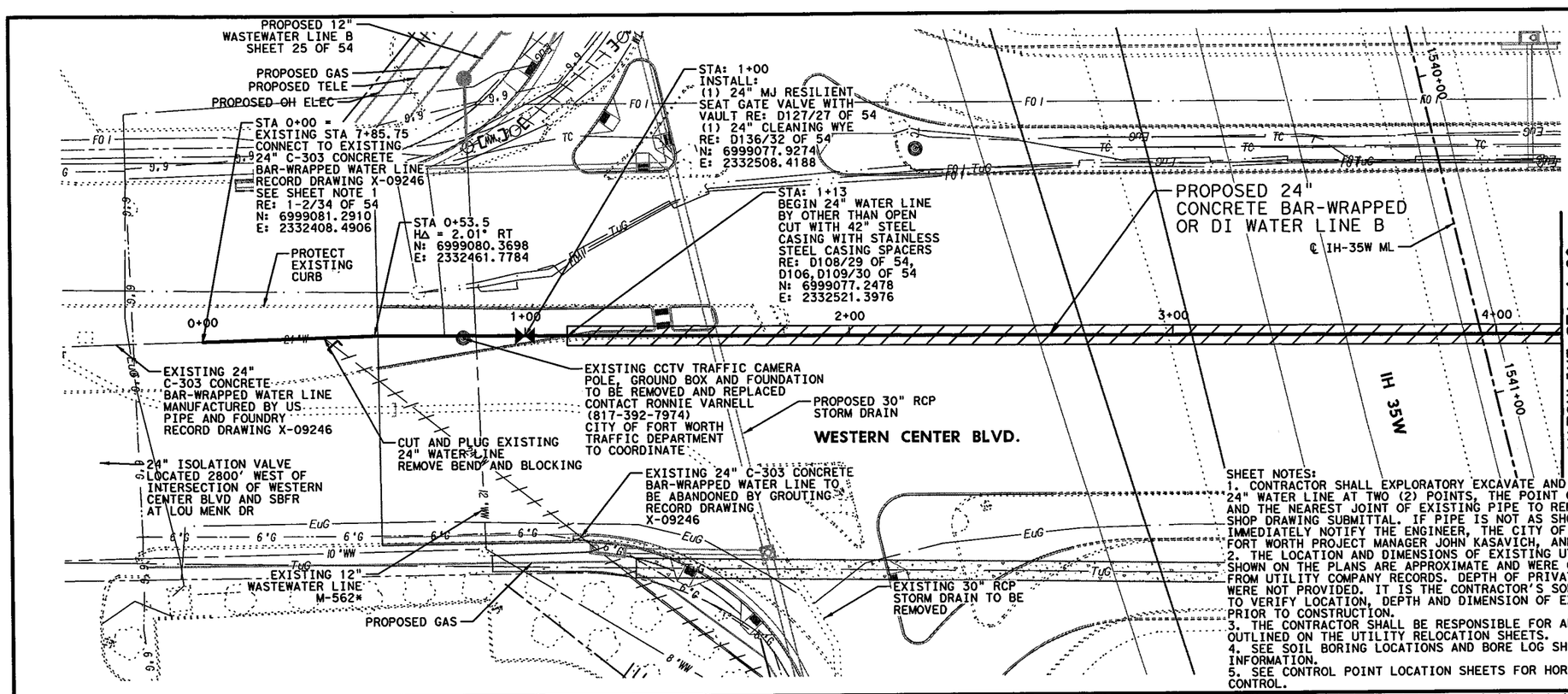

HORZ 0' 10' 20' 40'
VERT 0' 5' 10'
SCALE IN FEET
CITY OF FORT WORTH MAP # 2054-432

LEGEND:

- EXISTING WATER METER
- EXISTING FIRE HYDRANT
- EXISTING WATER VALVE
- PROPOSED WATER METER
- PROPOSED FIRE HYDRANT
- PROPOSED WATER VALVE
- CASING OR TUNNEL LINER PLATE

SHEET NOTES:
1. CONTRACTOR SHALL EXPLORATORY EXCAVATE AND SURVEY EXISTING 24" WATER LINE AT TWO (2) POINTS, THE POINT OF CONNECTION AND THE NEAREST JOINT OF EXISTING PIPE TO REMAIN PRIOR TO SHOP DRAWING SUBMITTAL. IF PIPE IS NOT AS SHOWN IN PLANS, IMMEDIATELY NOTIFY THE ENGINEER, THE CITY OF FORT WORTH PROJECT MANAGER JOHN KASAVICH, AND THE CITY INSPECTOR.
2. THE LOCATION AND DIMENSIONS OF EXISTING UTILITES SHOWN ON THE PLANS ARE APPROXIMATE AND WERE OBTAINED FROM UTILITY COMPANY RECORDS. DEPTH OF PRIVATE UTILITES WERE NOT PROVIDED. IT IS THE CONTRACTOR'S SOLE RESPONSIBILITY TO VERIFY LOCATION, DEPTH AND DIMENSION OF EXISTING UTILITIES PRIOR TO CONSTRUCTION.
3. THE CONTRACTOR SHALL BE RESPONSIBLE FOR ALL NOTES OUTLINED ON THE UTILITY RELOCATION SHEETS.
4. SEE SOIL BORING LOCATIONS AND BORE LOG SHEETS FOR SOIL INFORMATION.
5. SEE CONTROL POINT LOCATION SHEETS FOR HORIZONTAL AND VERTICAL CONTROL.

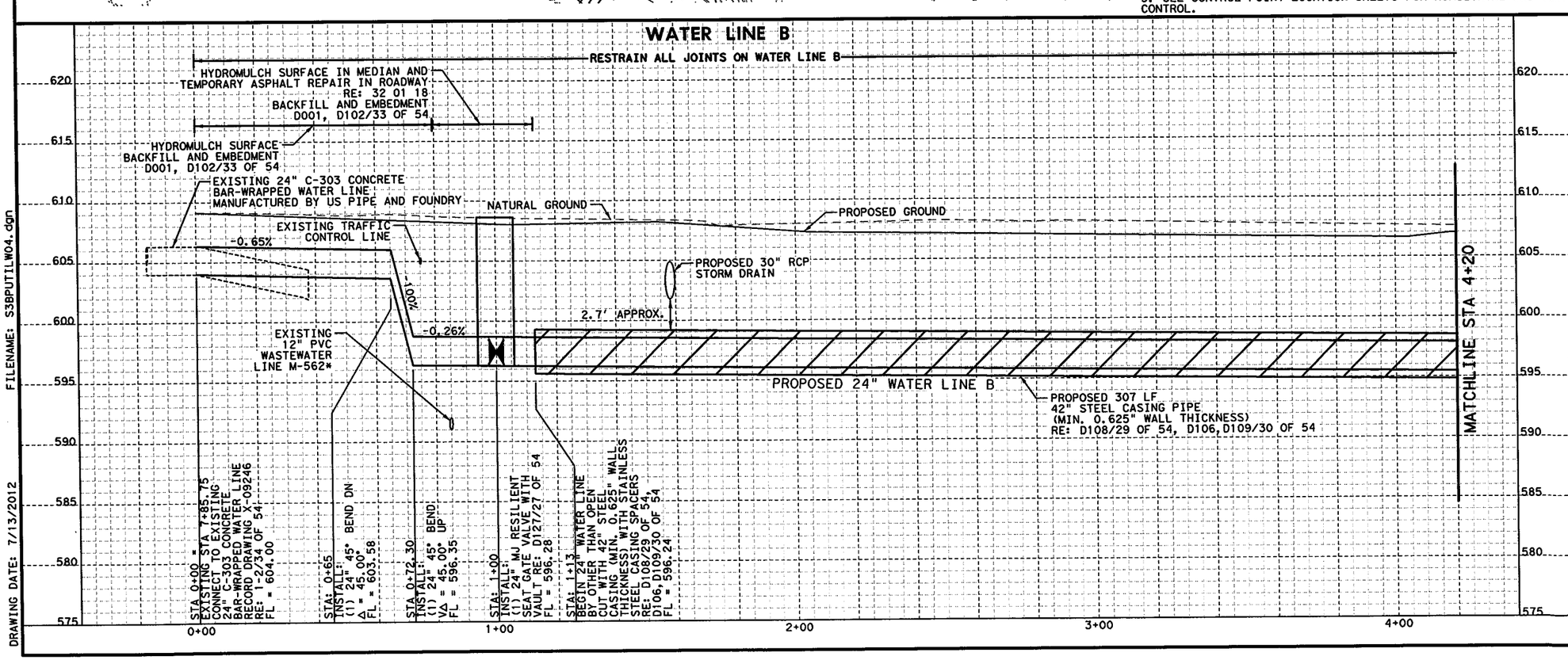

FILENAME: S3BPUTILW04.dgn

DRAWING DATE: 7/13/2012

RYAN D. OWEN
109586
LICENSED
PROFESSIONAL ENGINEER
STATE OF TEXAS
7/13/2012

Kimley-Horn and Associates, Inc.
TEXAS REGISTERED ENGINEERING FIRM F-928

Texas Department of Transportation
© 2012

IH 35W FROM NORTH TARRANT PKWY TO IH 820

IH 35W UTILITY RELOCATIONS
WATER LINE B
FROM BEGINNING TO STA 4+20

SCALE: 1" = 40' H, 1" = 10' V — SHEET 19 OF 54

DESIGN	FED. RD. DIV. NO.	FEDERAL AID PROJECT NO.		HIGHWAY NO.
KHA	6	(SEE TITLE SHEET)		IH 35W
GRAPHICS	STATE	DISTRICT	COUNTY	SHEET NO.
KHA	TEXAS	FTW	TARRANT	1357
CHECK	CONTROL	SECTION	JOB	
KHA	0014	16	255, ETC.	

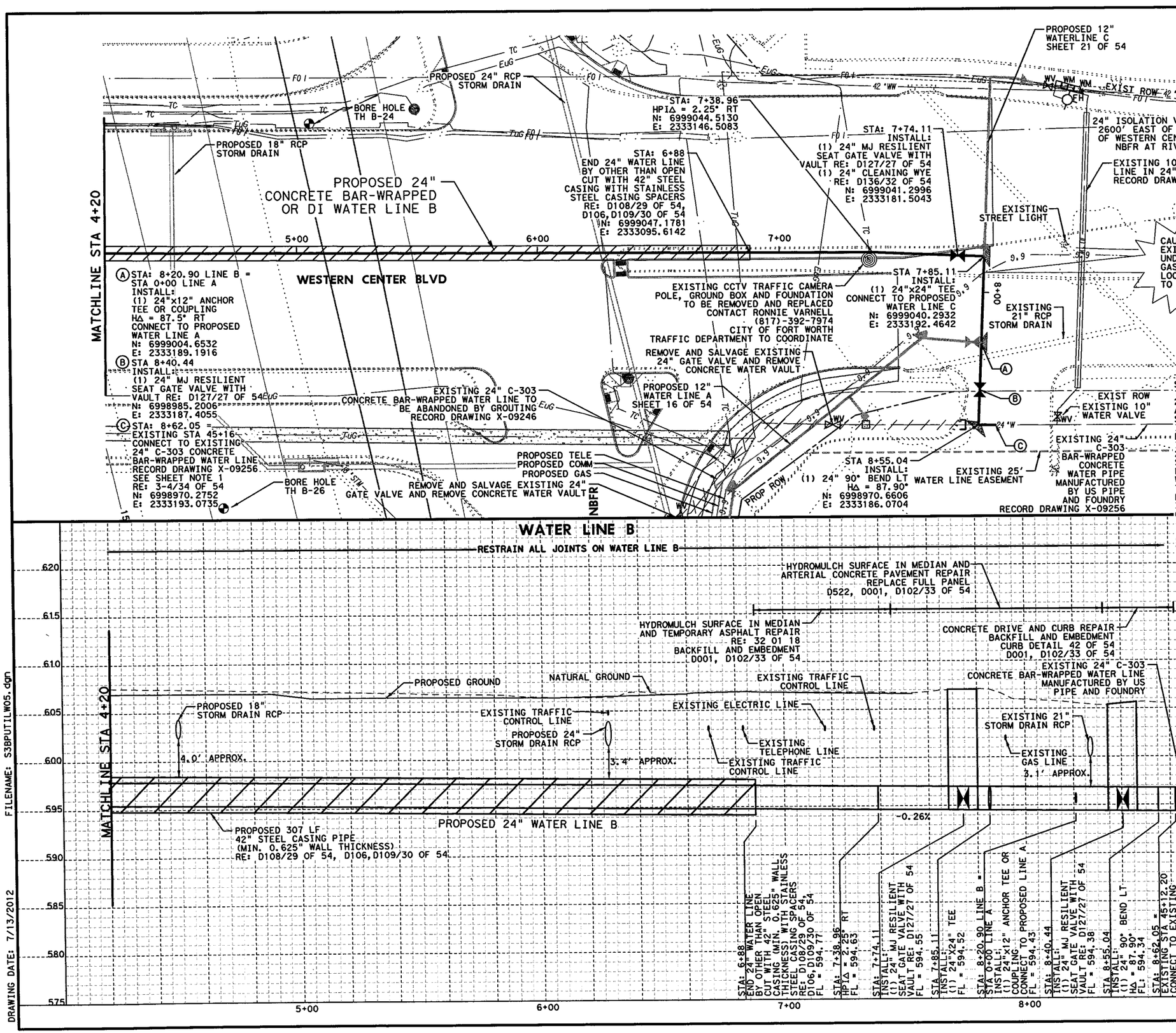

HORZ 0' 10' 20' 40'
VERT 0' 5' 10'
SCALE IN FEET
CITY OF FORT WORTH MAP # 2054-432

LEGEND:

- EXISTING WATER METER
- EXISTING FIRE HYDRANT
- EXISTING WATER VALVE
- PROPOSED WATER METER
- PROPOSED FIRE HYDRANT
- PROPOSED WATER VALVE
- CASING OR TUNNEL LINER PLATE

SHEET NOTES:

1. CONTRACTOR SHALL EXPLORATORY EXCAVATE AND SURVEY EXISTING 24" WATER LINE AT TWO (2) POINTS, THE POINT OF CONNECTION AND THE NEAREST JOINT OF EXISTING PIPE TO REMAIN PRIOR TO SHOP DRAWING SUBMITTAL. IF PIPE IS NOT AS SHOWN IN PLANS, IMMEDIATELY NOTIFY THE ENGINEER, THE CITY OF FORT WORTH PROJECT MANAGER JOHN KASAVICH, AND THE CITY INSPECTOR.
2. THE LOCATION AND DIMENSIONS OF EXISTING UTILITES SHOWN ON THE PLANS ARE APPROXIMATE AND WERE OBTAINED FROM UTILITY COMPANY RECORDS. DEPTH OF PRIVATE UTILITES WERE NOT PROVIDED. IT IS THE CONTRACTOR'S SOLE RESPONSIBILITY TO VERIFY LOCATION, DEPTH AND DIMENSION OF EXISTING UTILITIES PRIOR TO CONSTRUCTION.
3. THE CONTRACTOR SHALL BE RESPONSIBLE FOR ALL NOTES OUTLINED ON THE UTILITY RELOCATION SHEETS.
4. SEE SOIL BORING LOCATIONS AND BORE LOG SHEETS FOR SOIL INFORMATION.
5. SEE CONTROL POINT LOCATION SHEETS FOR HORIZONTAL AND VERTICAL CONTROL.

STATE OF TEXAS
RYAN D. OWEN
109586
LICENSED
PROFESSIONAL ENGINEER
7/13/2012

Kimley-Horn and Associates, Inc.
TEXAS REGISTERED ENGINEERING FIRM F-928

Texas Department of Transportation
© 2012

IH 35W FROM NORTH TARRANT PKWY TO IH 820

IH 35W UTILITY RELOCATIONS

WATER LINE B

STA 4+20 TO END

SCALE: 1" = 40' H, 1" = 10' V — SHEET 20 OF 54

DESIGN	FED. RD. DIV. NO.	FEDERAL AID PROJECT NO.		HIGHWAY NO.
KHA	6	(SEE TITLE SHEET)		IH 35W
GRAPHICS	STATE	DISTRICT	COUNTY	SHEET NO.
KHA	TEXAS	FTW	TARRANT	1358
CHECK	CONTROL	SECTION	JOB	
KHA	0014	16	255, ETC.	

DRAWING DATE: 7/13/2012 FILENAME: S3BPUTILW05.dgn

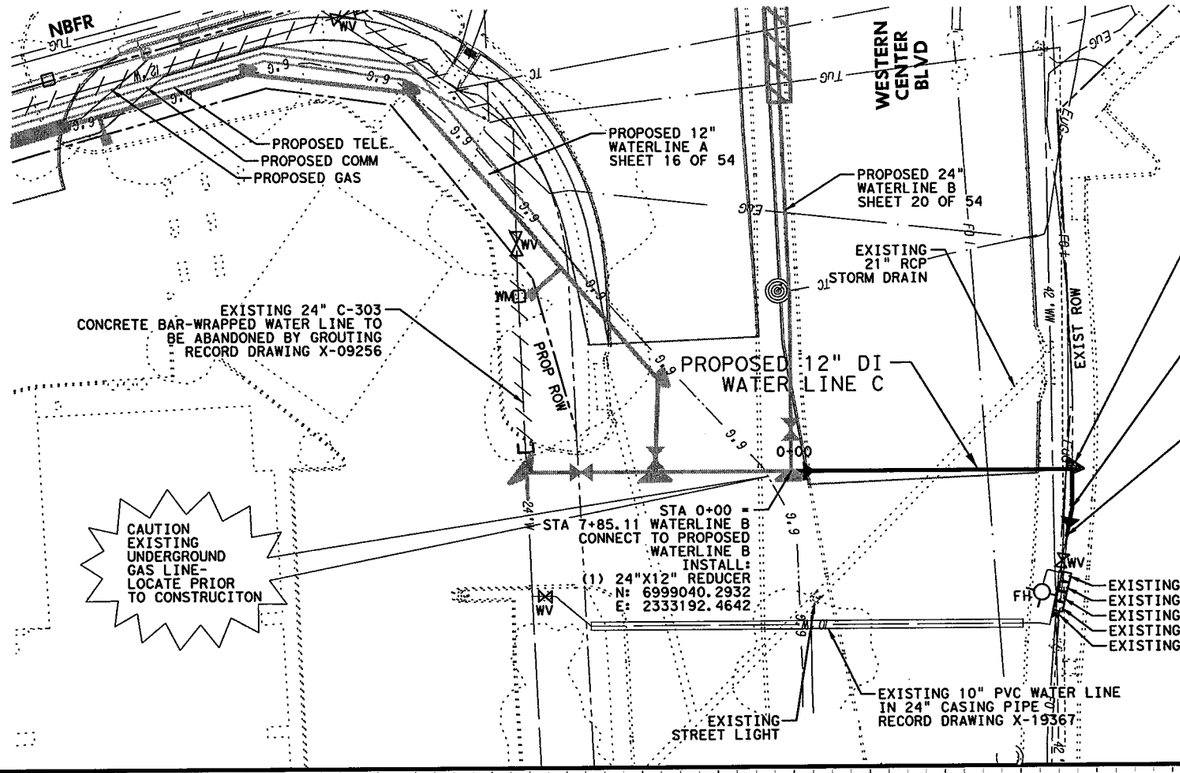

SHEET NOTES:
1. THE LOCATION AND DIMENSIONS OF EXISTING UTILITES SHOWN ON THE PLANS ARE APPROXIMATE AND WERE OBTAINED FROM UTILITY COMPANY RECORDS. DEPTH OF PRIVATE UTILITES WERE NOT PROVIDED. IT IS THE CONTRACTOR'S SOLE RESPONSIBILITY TO VERIFY LOCATION, DEPTH AND DIMENSION OF EXISTING UTILITIES PRIOR TO CONSTRUCTION.
2. THE CONTRACTOR SHALL BE RESPONSIBLE FOR ALL NOTES OUTLINED ON THE UTILITY RELOCATION SHEETS.
3. SEE SOIL BORING LOCATIONS AND BORE LOG SHEETS FOR SOIL INFORMATION.
4. SEE CONTROL POINT LOCATION SHEETS FOR HORIZONTAL AND VERTICAL CONTROL.

CASA RITA'S, BEYOND SMILES, KEVA SMOOTHIES, AT&T, WHICH WICH, FEDEX OFFICE, GENGHIS GRILL
6600 NORTH FREEWAY
FORT WORTH, TX 76137
OWNER:
CHRISTOPHER S CARROL NUMBER 4, LTD
2340 INTERSTATE 20 W, STE 100
ARLINGTON, TX 76017

HORZ 0' 10' 20' 40'
VERT 0' 5' 10'
SCALE IN FEET
CITY OF FORT WORTH MAP # 2054-432

LEGEND:

- EXISTING WATER METER
- EXISTING FIRE HYDRANT
- EXISTING WATER VALVE
- PROPOSED WATER METER
- PROPOSED FIRE HYDRANT
- PROPOSED WATER VALVE
- CASING OR TUNNEL LINER PLATE

WATER LINE C

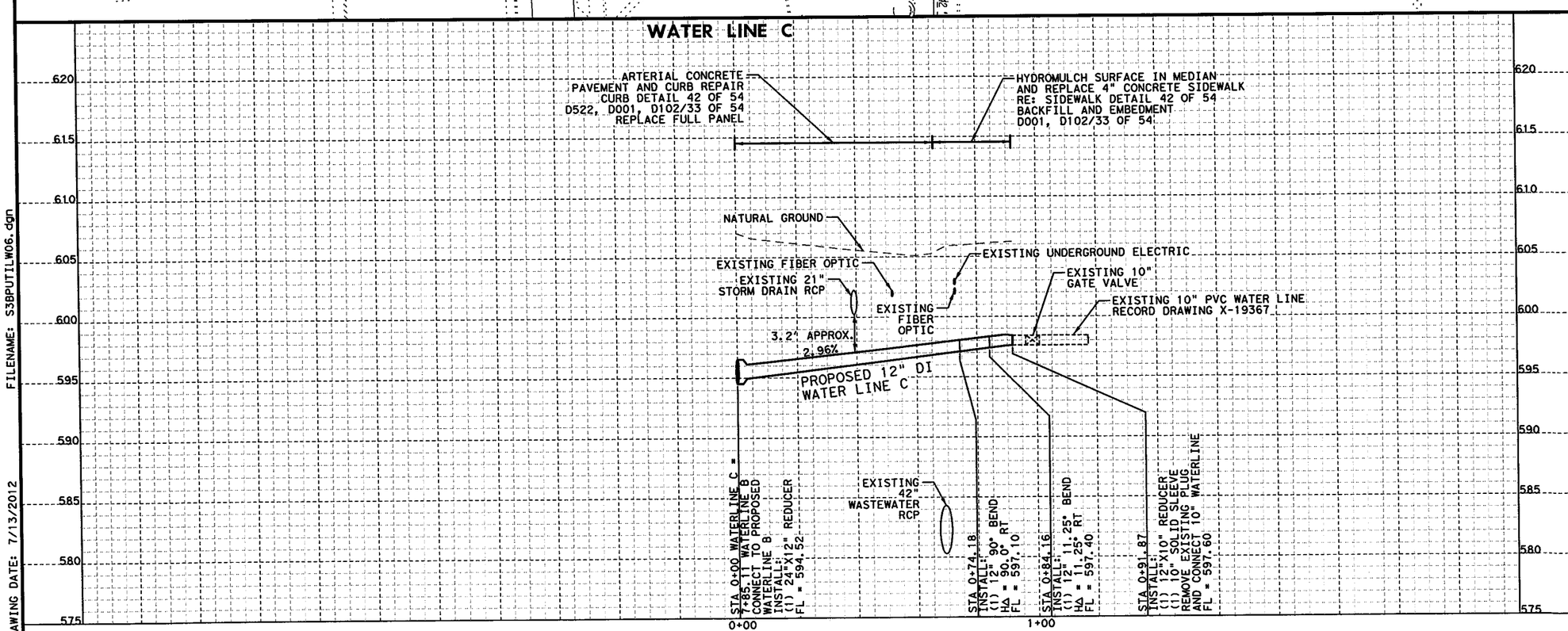

STATE OF TEXAS
RYAN D. OWEN
109586
LICENSED PROFESSIONAL ENGINEER
7/13/2012

Kimley-Horn and Associates, Inc.
TEXAS REGISTERED ENGINEERING FIRM F-928

Texas Department of Transportation
© 2012

IH 35W FROM NORTH TARRANT PKWY TO IH 820

IH 35W UTILITY RELOCATIONS
WATER LINE C
FROM BEGINNING TO END

SCALE: 1" = 40' H, 1" = 10' V — SHEET 21 OF 54

DESIGN KHA	FED.RD. DIV.NO. 6	FEDERAL AID PROJECT NO. (SEE TITLE SHEET)		HIGHWAY NO. IH 35W
GRAPHICS KHA	STATE TEXAS	DISTRICT FTW	COUNTY TARRANT	SHEET NO. 1359
CHECK KHA	CONTROL 0014	SECTION 16	JOB 255, ETC.	
CHECK KHA				

FILENAME: S38PUTILW06.dgn
DRAWING DATE: 7/13/2012

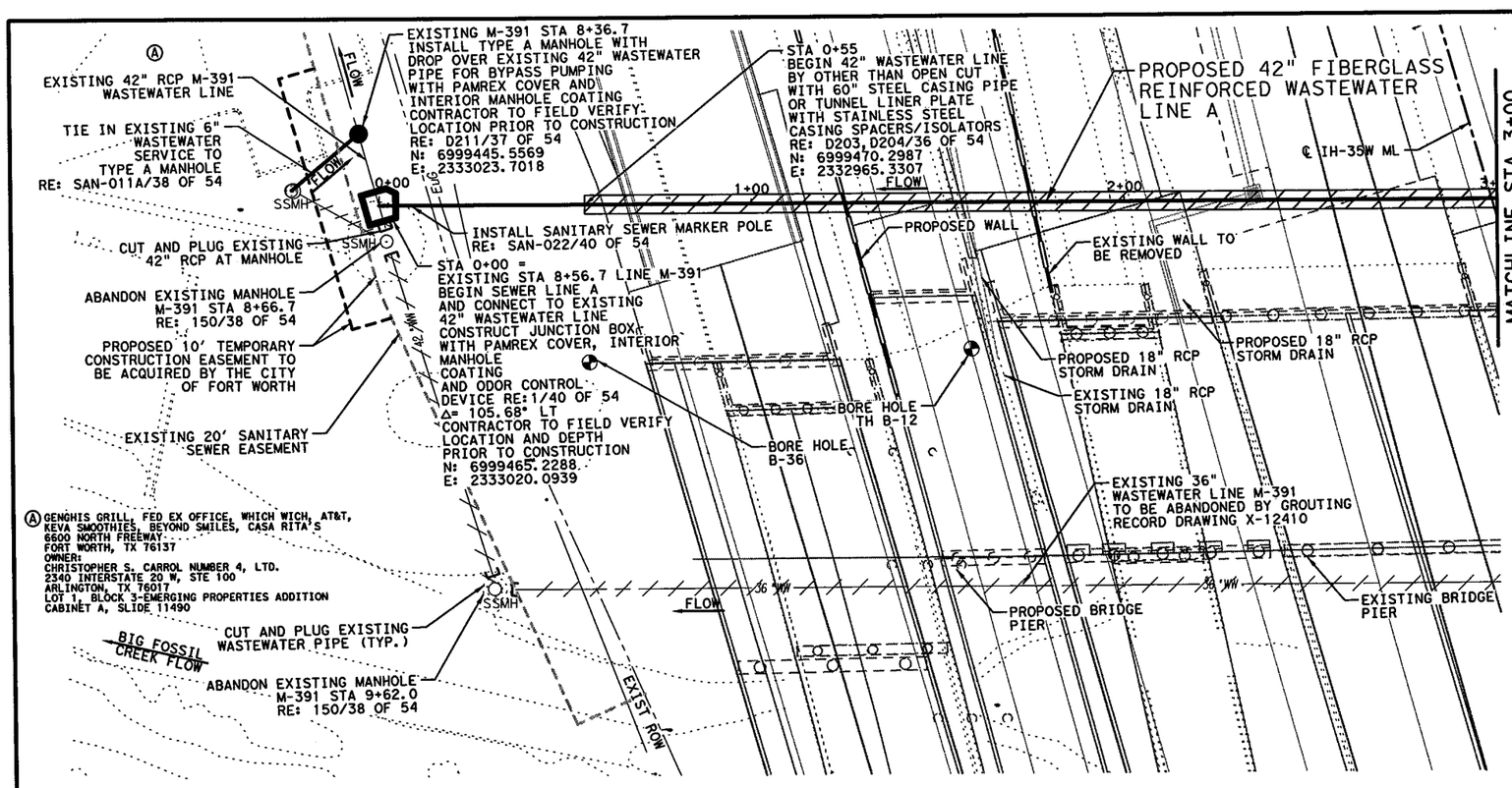

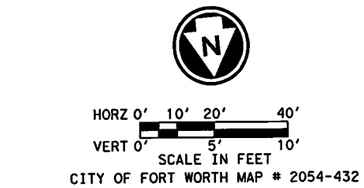

LEGEND:

- SSMH — EXISTING SANITARY SEWER MANHOLE
- EXISTING SANITARY SEWER CLEAN OUT
- SSMH — PROPOSED SANITARY SEWER MANHOLE
- PROPOSED SANITARY SEWER CLEAN OUT
- CASING OR TUNNEL LINER PLATE

SHEET NOTES:
1. THE LOCATION AND DIMENSIONS OF EXISTING UTILITES SHOWN ON THE PLANS ARE APPROXIMATE AND WERE OBTAINED FROM UTILITY COMPANY RECORDS. DEPTH OF PRIVATE UTILITES WERE NOT PROVIDED. IT IS THE CONTRACTOR'S SOLE RESPONSIBILITY TO VERIFY LOCATION, DEPTH AND DIMENSION OF EXISTING UTILITIES PRIOR TO CONSTRUCTION.
2. THE CONTRACTOR SHALL BE RESPONSIBLE FOR ALL NOTES OUTLINED ON THE UTILITY RELOCATION SHEETS.
3. SEE SOIL BORING LOCATIONS AND BORE LOG SHEETS FOR SOIL INFORMATION.
4. SEE CONTROL POINT LOCATION SHEETS FOR HORIZONTAL AND VERTICAL CONTROL.

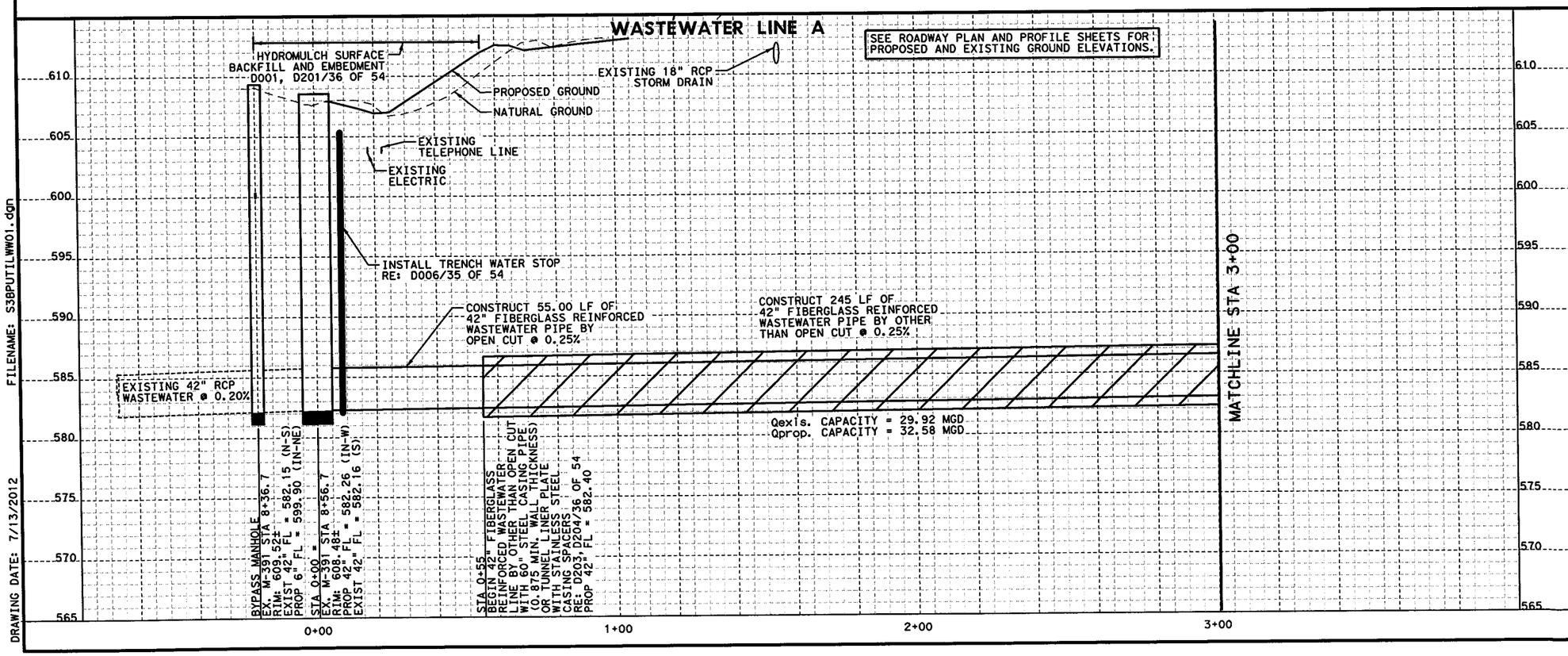

FILENAME: S3BPUTILWW01.dgn

DRAWING DATE: 7/13/2012

Kimley-Horn and Associates, Inc.
TEXAS REGISTERED ENGINEERING FIRM F-928

Texas Department of Transportation
© 2012

IH 35W FROM NORTH TARRANT PKWY TO IH 820

IH 35W UTILITY RELOCATIONS
WASTEWATER LINE A
FROM BEGINNING TO STA 3+00

SCALE: 1" = 40' H, 1" = 10' V — SHEET 22 OF 54

DESIGN KHA	FED. RD. DIV. NO. 6	FEDERAL AID PROJECT NO. (SEE TITLE SHEET)		HIGHWAY NO. IH 35W
GRAPHICS KHA	STATE TEXAS	DISTRICT FTW	COUNTY TARRANT	SHEET NO. 1360
CHECK KHA	CONTROL 0014	SECTION 16	JOB 255, ETC.	
CHECK KHA				

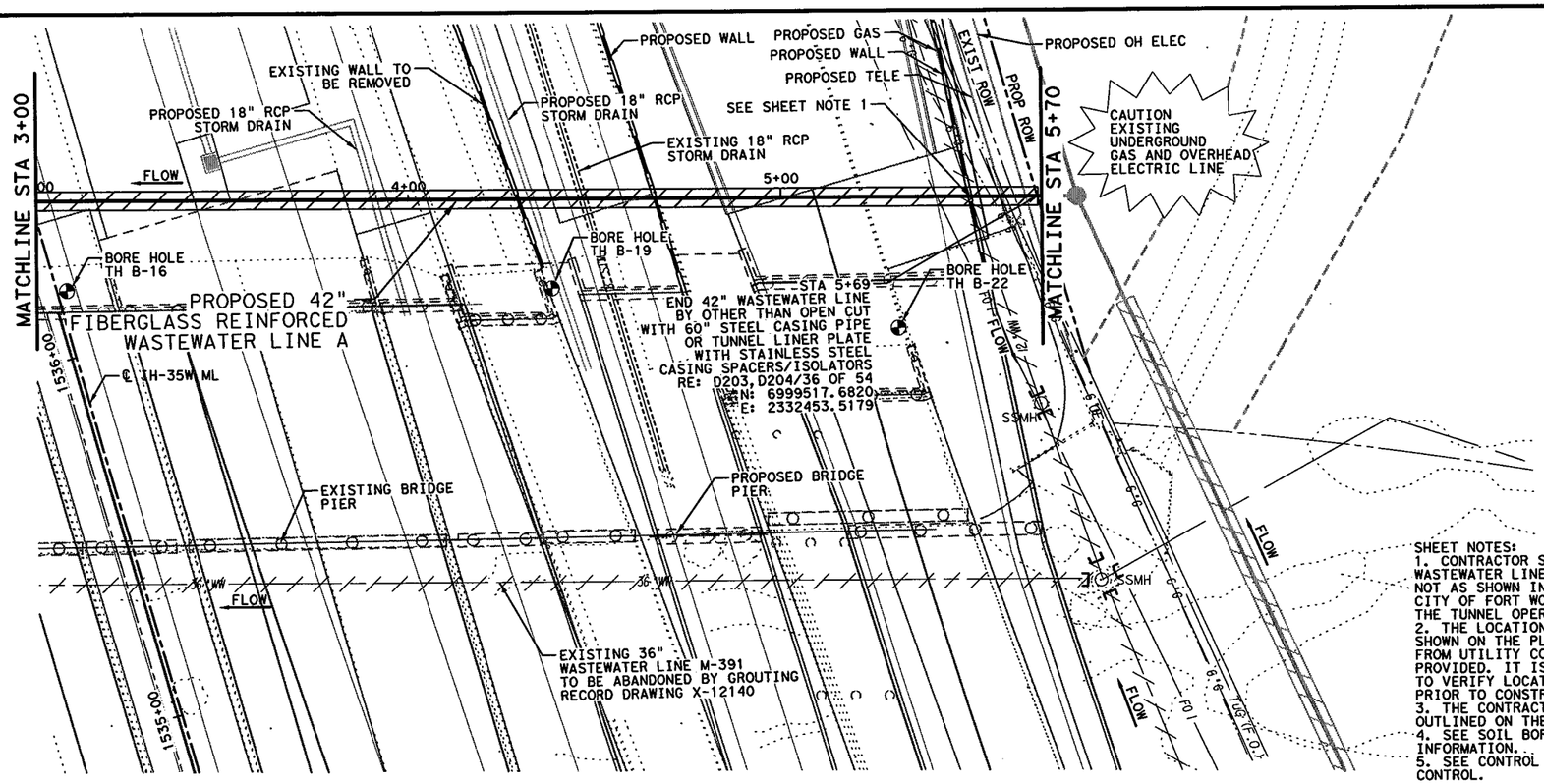

HORZ 0' 10' 20' 40'
VERT 0' 5' 10'
SCALE IN FEET
CITY OF FORT WORTH MAP # 2054-432

LEGEND:

- SSMH — EXISTING SANITARY SEWER MANHOLE
- EXISTING SANITARY SEWER CLEAN OUT
- SSMH — PROPOSED SANITARY SEWER MANHOLE
- PROPOSED SANITARY SEWER CLEAN OUT
- CASING OR TUNNEL LINER PLATE

SHEET NOTES:
1. CONTRACTOR SHALL EXPLORATORY EXCAVATE AND SURVEY EXISTING 12" WASTEWATER LINE M-562* AT PROPOSED CROSSING LOCATION. IF PIPE IS NOT AS SHOWN IN PLANS, IMMEDIATELY NOTIFY THE ENGINEER AND THE CITY OF FORT WORTH WATER DEPT. EXCAVATION IS TO REMAIN OPEN DURING THE TUNNEL OPERATION.
2. THE LOCATION AND DIMENSIONS OF EXISTING UTILITES SHOWN ON THE PLANS ARE APPROXIMATE AND WERE OBTAINED FROM UTILITY COMPANY RECORDS. DEPTH OF PRIVATE UTILITES WERE NOT PROVIDED. IT IS THE CONTRACTOR'S SOLE RESPONSIBILITY TO VERIFY LOCATION, DEPTH AND DIMENSION OF EXISTING UTILITIES PRIOR TO CONSTRUCTION.
3. THE CONTRACTOR SHALL BE RESPONSIBLE FOR ALL NOTES OUTLINED ON THE UTILITY RELOCATION SHEETS.
4. SEE SOIL BORING LOCATIONS AND BORE LOG SHEETS FOR SOIL INFORMATION.
5. SEE CONTROL POINT LOCATION SHEETS FOR HORIZONTAL AND VERTICAL CONTROL.

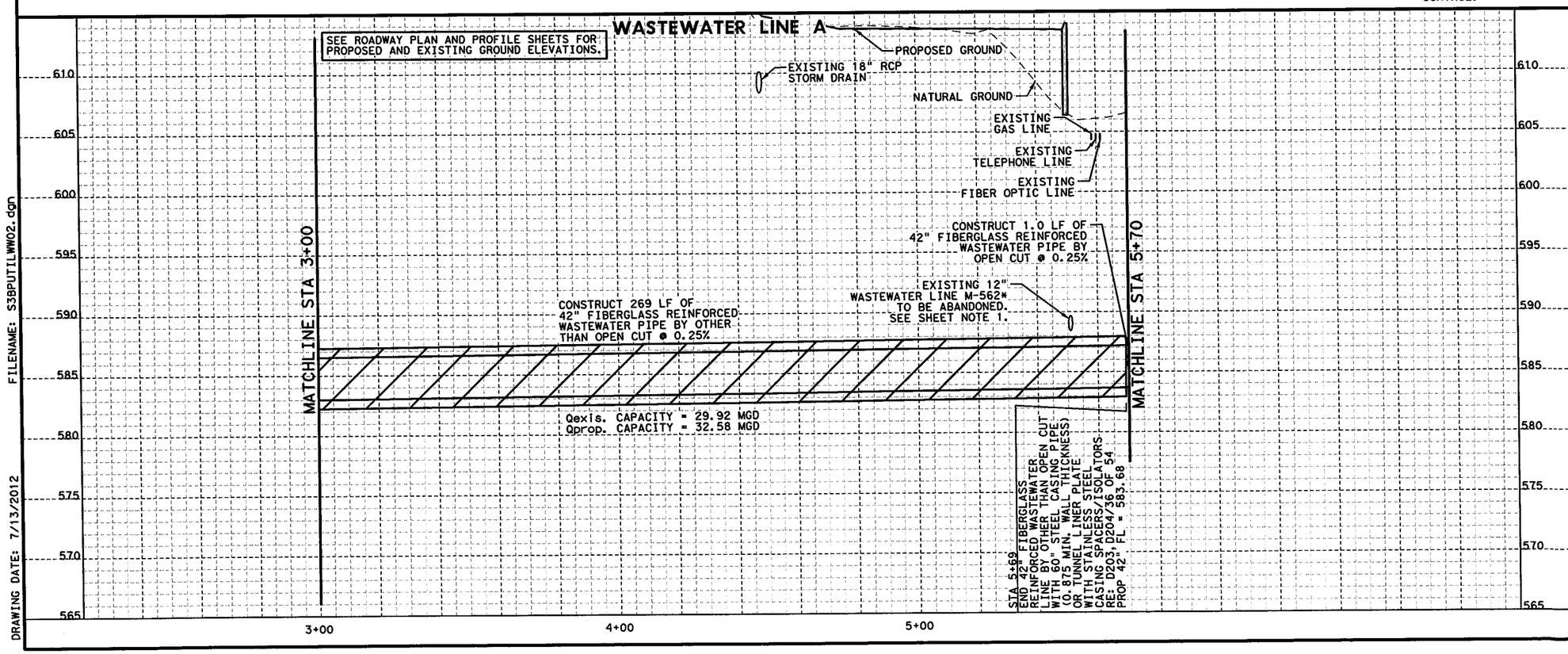

STATE OF TEXAS
RYAN D. OWEN
109586
LICENSED
PROFESSIONAL ENGINEER
7/13/2012

Kimley-Horn and Associates, Inc.
TEXAS REGISTERED ENGINEERING FIRM F-928

Texas Department of Transportation
© 2012

IH 35W FROM NORTH TARRANT PKWY TO IH 820

IH 35W UTILITY RELOCATIONS
WASTEWATER LINE A
FROM STA 3+00 TO STA 5+70

SCALE: 1" = 40' H, 1" = 10' V — SHEET 23 OF 54

DESIGN	FED.RD. DIV.NO.	FEDERAL AID PROJECT NO.		HIGHWAY NO.
KHA	6	(SEE TITLE SHEET)		IH 35W
GRAPHICS	STATE	DISTRICT	COUNTY	SHEET NO.
KHA	TEXAS	FTW	TARRANT	1361
CHECK	CONTROL	SECTION	JOB	
KHA	0014	16	255, ETC.	

FILENAME: S3BPUTILWW02.dgn
DRAWING DATE: 7/13/2012

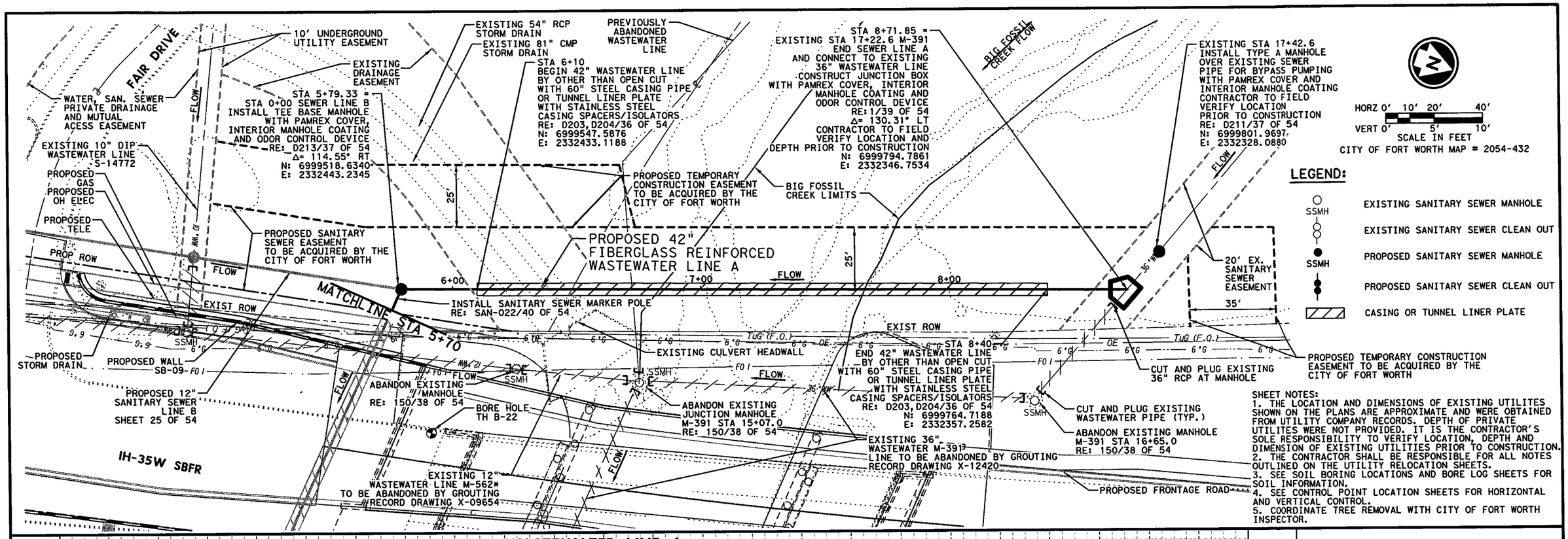

SHEET NOTES:
1. THE LOCATION AND DIMENSIONS OF EXISTING UTILITES SHOWN ON THE PLANS ARE APPROXIMATE AND WERE OBTAINED FROM UTILITY COMPANY RECORDS. DEPTH OF PRIVATE UTILITES WERE NOT PROVIDED. IT IS THE CONTRACTOR'S SOLE RESPONSIBILITY TO VERIFY LOCATION, DEPTH AND DIMENSION OF EXISTING UTILITIES PRIOR TO CONSTRUCTION.
2. THE CONTRACTOR SHALL BE RESPONSIBLE FOR ALL NOTES OUTLINED ON THE UTILITY RELOCATION SHEETS.
3. SEE SOIL BORING LOCATIONS AND BORE LOG SHEETS FOR SOIL INFORMATION.
4. SEE CONTROL POINT LOCATION SHEETS FOR HORIZONTAL AND VERTICAL CONTROL.
5. COORDINATE TREE REMOVAL WITH CITY OF FORT WORTH INSPECTOR.

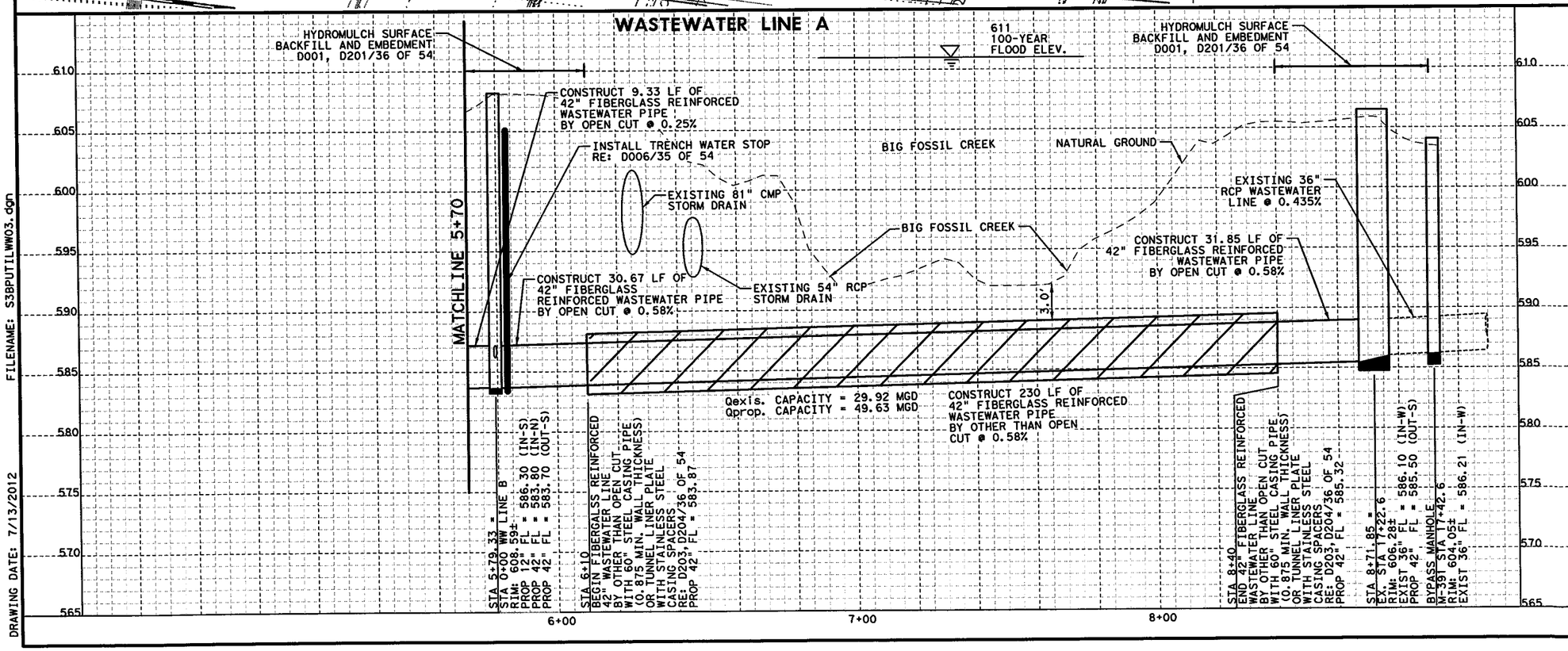

FILENAME: S38PUTILWW03.dgn

DRAWING DATE: 7/13/2012

STATE OF TEXAS
RYAN D. OWEN
109586
LICENSED PROFESSIONAL ENGINEER
7/13/2012

Kimley-Horn and Associates, Inc.
TEXAS REGISTERED ENGINEERING FIRM F-928

Texas Department of Transportation
© 2012

IH 35W FROM NORTH TARRANT PKWY TO IH 820

IH 35W UTILITY RELOCATIONS
WASTEWATER LINE A
FROM STA 5+70 TO END

SCALE: 1" = 40' H, 1" = 10' V — SHEET 24 OF 54

DESIGN	FED.RD. DIV. NO.	FEDERAL AID PROJECT NO.		HIGHWAY NO.
KHA	6	(SEE TITLE SHEET)		IH 35W
GRAPHICS	STATE	DISTRICT	COUNTY	SHEET NO.
KHA	TEXAS	FTW	TARRANT	1362
CHECK	CONTROL	SECTION	JOB	
KHA	0014	16	255, ETC.	

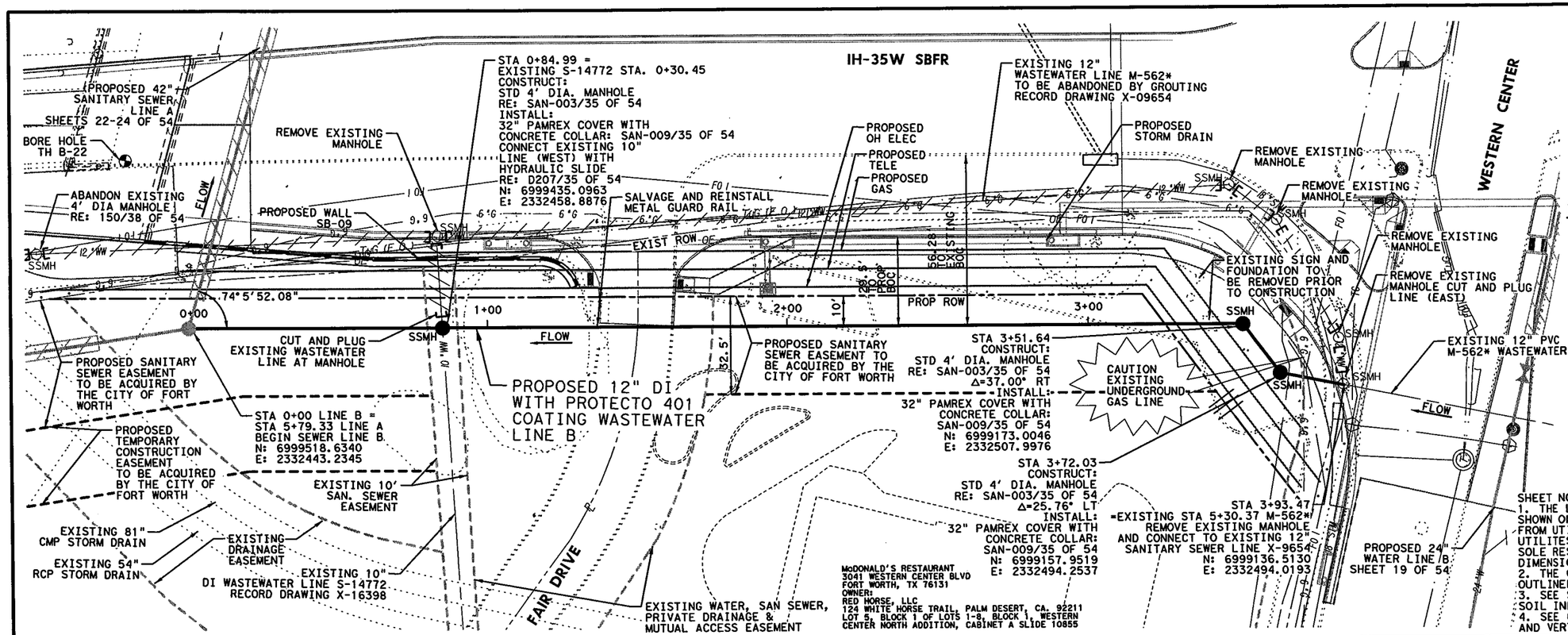

HORZ 0' 10' 20' 40'
VERT 0' 5' 10'
SCALE IN FEET
CITY OF FORT WORTH MAP # 2054-432

LEGEND:

- SSMH — EXISTING SANITARY SEWER MANHOLE
- EXISTING SANITARY SEWER CLEAN OUT
- SSMH — PROPOSED SANITARY SEWER MANHOLE
- PROPOSED SANITARY SEWER CLEAN OUT
- CASING OR TUNNEL LINER PLATE

SHEET NOTES:
1. THE LOCATION AND DIMENSIONS OF EXISTING UTILITES SHOWN ON THE PLANS ARE APPROXIMATE AND WERE OBTAINED FROM UTILITY COMPANY RECORDS. DEPTH OF PRIVATE UTILITES WERE NOT PROVIDED. IT IS THE CONTRACTOR'S SOLE RESPONSIBILITY TO VERIFY LOCATION, DEPTH AND DIMENSION OF EXISTING UTILITIES PRIOR TO CONSTRUCTION.
2. THE CONTRACTOR SHALL BE RESPONSIBLE FOR ALL NOTES OUTLINED ON THE UTILITY RELOCATION SHEETS.
3. SEE SOIL BORING LOCATIONS AND BORE LOG SHEETS FOR SOIL INFORMATION.
4. SEE CONTROL POINT LOCATION SHEETS FOR HORIZONTAL AND VERTICAL CONTROL.

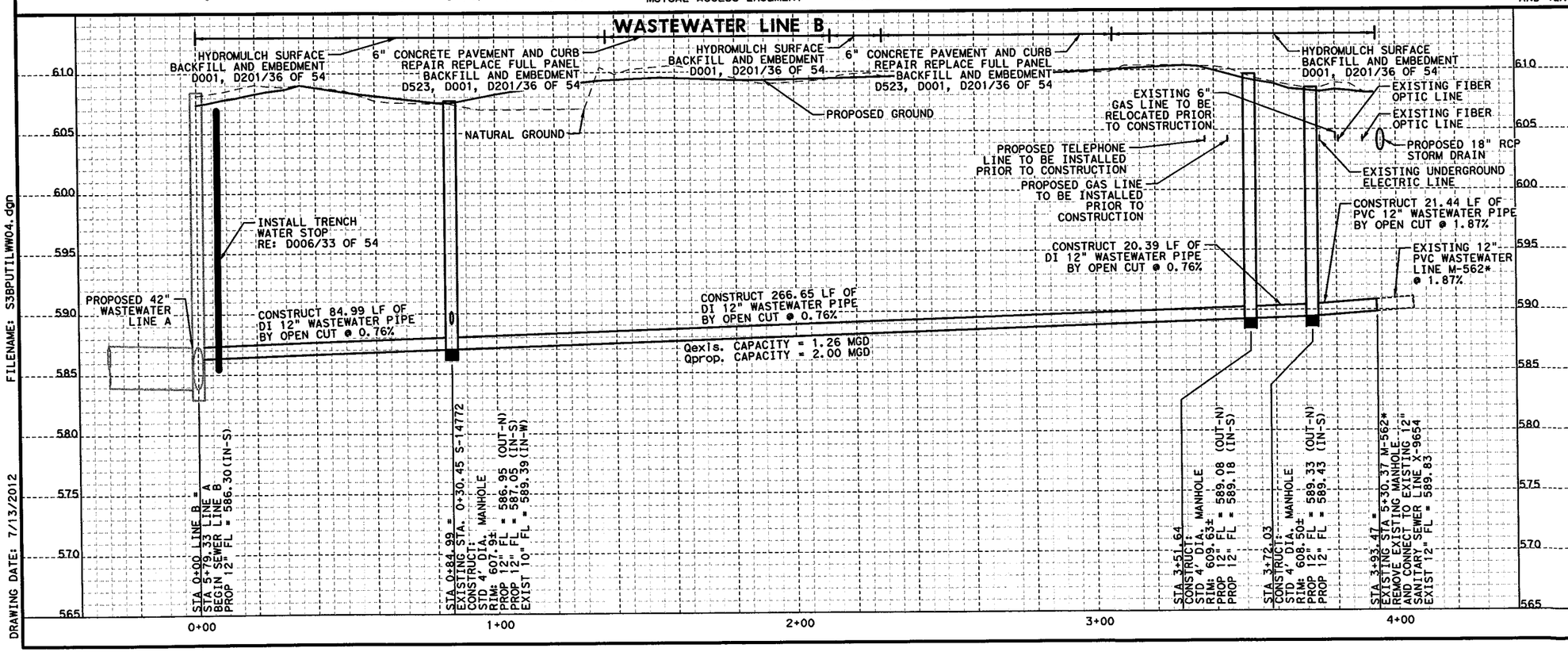

STATE OF TEXAS
RYAN D. OWEN
109586
LICENSED PROFESSIONAL ENGINEER
7/13/2012

Kimley-Horn and Associates, Inc.
TEXAS REGISTERED ENGINEERING FIRM F-928

Texas Department of Transportation
© 2012

IH 35W FROM NORTH TARRANT PKWY TO IH 820

IH 35W UTILITY RELOCATIONS

WASTEWATER LINE B
FROM BEGINNING TO END

SCALE: 1" = 40' H, 1" = 10' V — SHEET 25 OF 54

DESIGN	FED.RD. DIV.NO.	FEDERAL AID PROJECT NO.		HIGHWAY NO.
KHA	6	(SEE TITLE SHEET)		IH 35W
GRAPHICS KHA	STATE	DISTRICT	COUNTY	SHEET NO.
CHECK KHA	TEXAS	FTW	TARRANT	1363
CHECK KHA	CONTROL	SECTION	JOB	
	0014	16	255, ETC.	

FILENAME: S3BPUTILWW04.dgn
DRAWING DATE: 7/13/2012

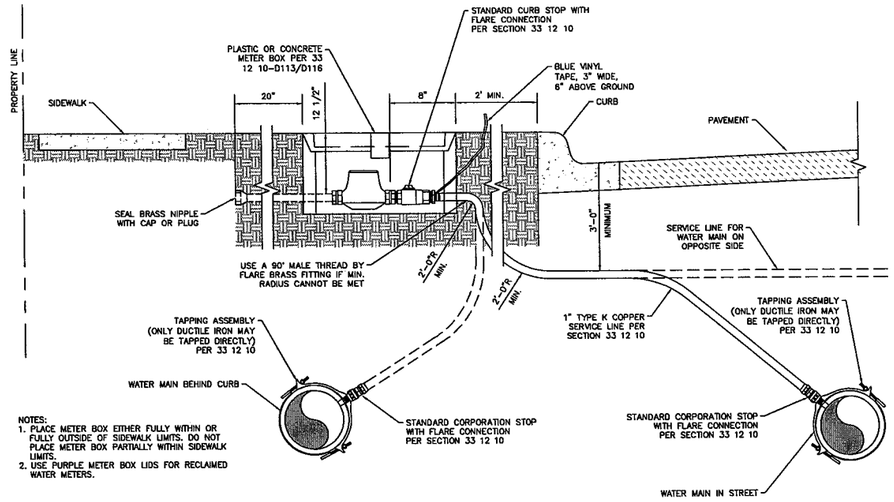

NOTES:
1. PLACE METER BOX EITHER FULLY WITHIN OR FULLY OUTSIDE OF SIDEWALK LIMITS. DO NOT PLACE METER BOX PARTIALLY WITHIN SIDEWALK LIMITS.
2. USE PURPLE METER BOX LIDS FOR RECLAIMED WATER METERS.

1-INCH WATER SERVICE
DETAIL 33 12 20-D111

SCALE: N.T.S.

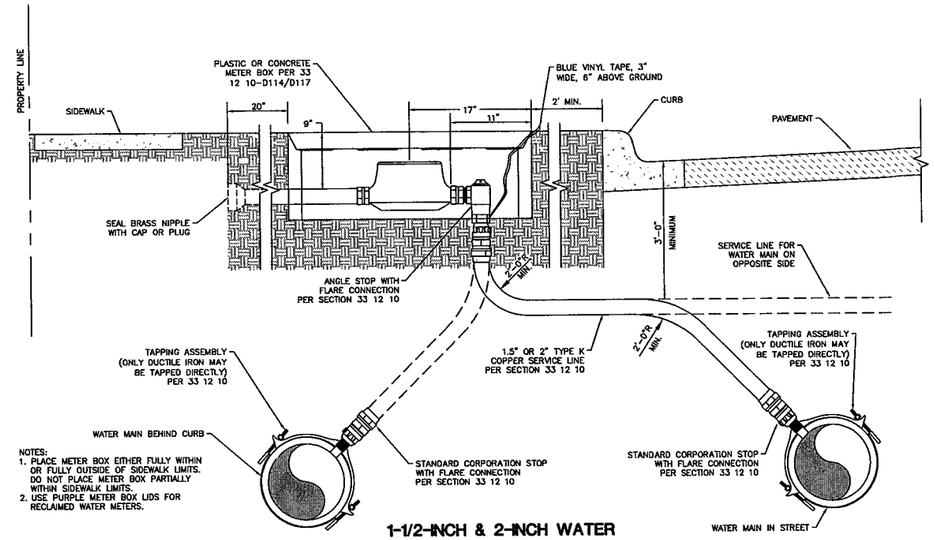

NOTES:
1. PLACE METER BOX EITHER FULLY WITHIN OR FULLY OUTSIDE OF SIDEWALK LIMITS. DO NOT PLACE METER BOX PARTIALLY WITHIN SIDEWALK LIMITS.
2. USE PURPLE METER BOX LIDS FOR RECLAIMED WATER METERS.

1-1/2-INCH & 2-INCH WATER SERVICE
DETAIL 33 12 20-D112

SCALE: N.T.S.

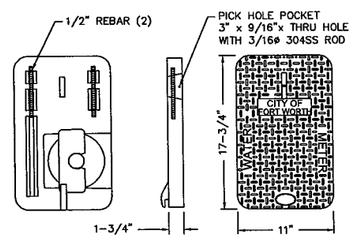

METER BOX LID

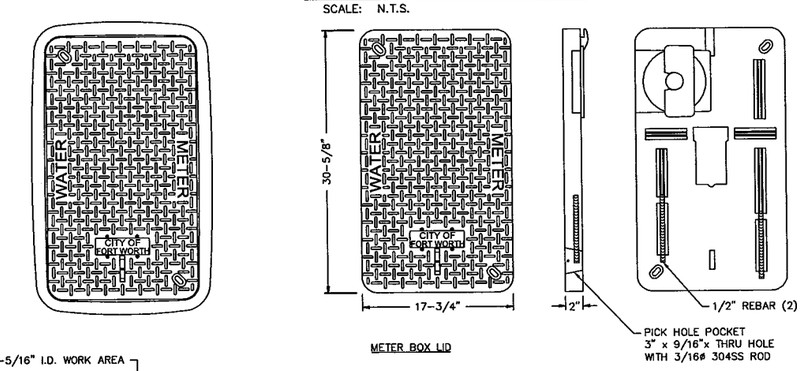

METER BOX LID

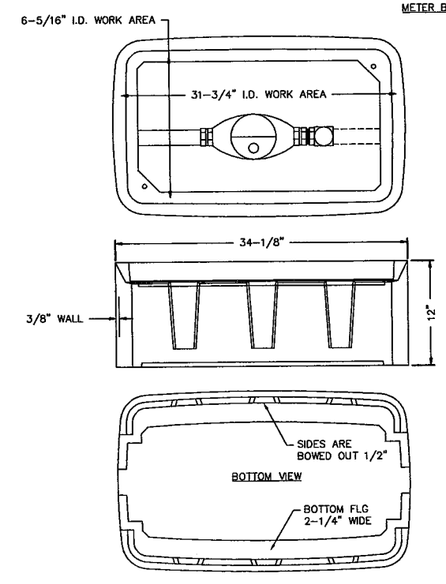

METER BOX

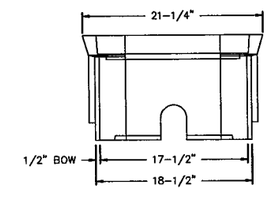

NOTES:
1. USE THIS METER BOX IN NON-PAVED AREAS ONLY.
2. DIMENSIONS ± 1/8" U.N.O.
3. WALL THICKNESS: 3/8"
4. SNAP LOCK POCKET WILL RECEIVE AMR/AMI DEVICE ENDPOINT. SNAP LOCK SLOT IS 1.80" ± .015" TO ALLOW FOR A FINGER FORCE INSTALL. POCKET HEIGHT IS 15/16" FOR MIN 1/8" AIR GAP.

2" STANDARD PLASTIC METER BOX (1-1/2" TO 2" METERS)
DETAIL 33 12 20-D114

SCALE: N.T.S.

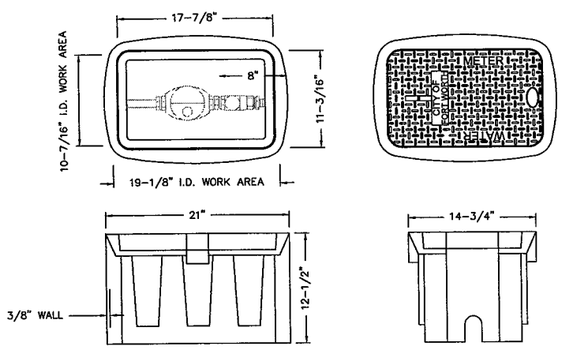

NOTES:
1. USE THIS METER BOX IN NON-PAVED AREAS ONLY.
2. DIMENSIONS ± 1/8" U.N.O.
3. WALL THICKNESS: 3/8"
4. SNAP LOCK POCKET WILL RECEIVE AMR/AMI DEVICE ENDPOINT. SNAP LOCK SLOT IS 1.80" ± .015" TO ALLOW FOR A FINGER FORCE INSTALL. POCKET HEIGHT IS 15/16" FOR MIN 1/8" AIR GAP.

METER BOX

1" STANDARD PLASTIC METER BOX (3/4" & 1" METERS)
DETAIL 33 12 20-D113

SCALE: N.T.S.

Kimley-Horn and Associates, Inc.
TEXAS REGISTERED ENGINEERING FIRM F-928

Texas Department of Transportation
© 2012

IH 35W FROM NORTH TARRANT PKWY TO IH 820

IH 35W UTILITY RELOCATIONS
WATER LINE DETAILS

SHEET 26 OF 54

DESIGN	FED.RD. DIV.NO.	FEDERAL AID PROJECT NO.		HIGHWAY NO.
KHA	6	(SEE TITLE SHEET)		IH 35W
GRAPHICS KHA	STATE	DISTRICT	COUNTY	SHEET NO.
CHECK KHA	TEXAS	FTW	TARRANT	1364
CHECK KHA	CONTROL	SECTION	JOB	
	0014	16	255, ETC.	

FILENAME: S3BPUTIL*DETAILS*W01.dgn

DRAWING DATE: 7/13/2012

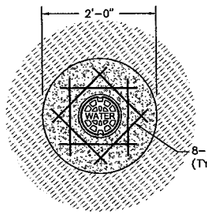

CONCRETE COLLAR (ASPHALT)

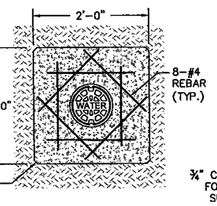

CONCRETE COLLAR (UNIMPROVED SURFACES)

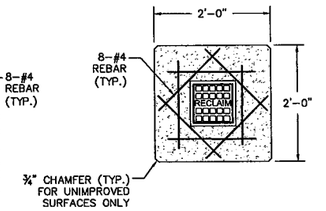

CONCRETE COLLAR (RECLAIMED WATER – ALL LOCATIONS)

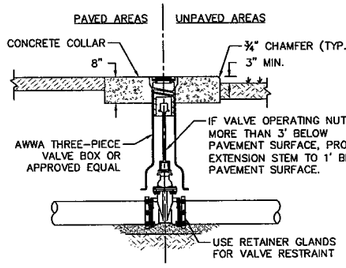

GATE VALVE

NOTES:
1. GATE VALVES SHALL BE RESILIENT SEATED.
2. REINFORCEMENT SHALL BE PLACED IN MIDDLE OF COLLARS.
3. PROVIDE 3" MIN. OF COVER OVER REINFORCEMENT IN ALL DIRECTIONS.
4. COLLARS SHALL BE 4,000 PSI CONCRETE PER SECTION 03 30 00.

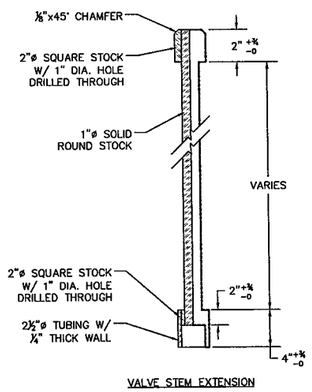

VALVE STEM EXTENSION

NOTES:
1. 1" ROUND SOLID BAR & 2" SQUARE PER ASTM A-108-81. SAE 1020, COLD DRAWN OR BETTER.
2. 2-½" TUBING PER ASTM A-512-79, SAE 1020, COLD DRAWN OR BETTER.
3. ALL WELDS SHALL COMPLY WITH A.W.S. CODE FOR PROCEDURE, APPEARANCE AND QUALITY OF WELDS.

WATER DISTRIBUTION GATE VALVE AND BOX (12" AND SMALLER)

DETAIL 33 12 20-D126

SCALE: N.T.S.

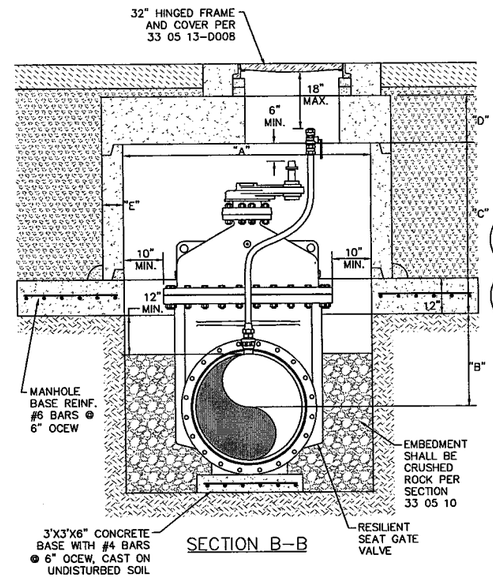

SECTION B-B

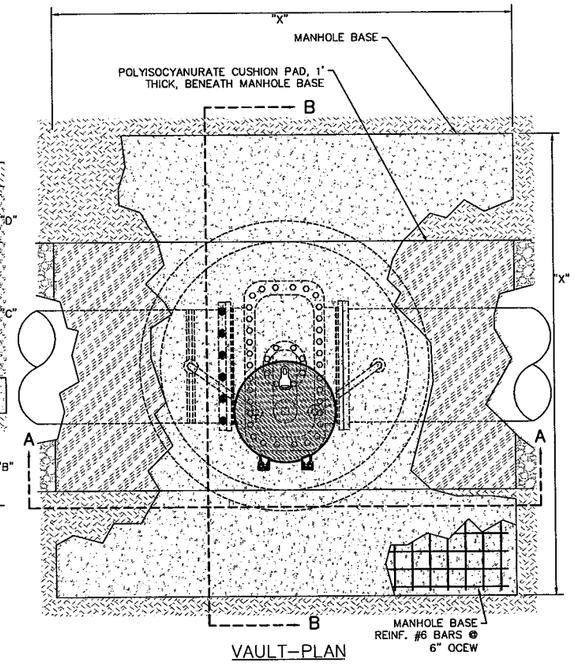

VAULT-PLAN

DIMENSION TABLE									
GATE VALVE SIZE	A	B	MIN. C	D	E	RISER SIZE	MIN. BURY DEPTH PAVED*	MIN. BURY DEPTH UNPAVED*	X
16"	5' ø	1'-8"	2'-6"	13"	5"	1"	6'-2"	5'-3"	11'
18"	6' ø	1'-9"	3'-7"	16"	6"	1"	6'-10"	5'-11"	12'
20"	6' ø	1'-10"	3'-7"	16"	6"	1"	6'-10"	5'-11"	12'
24"	6' ø	2'-0"	3'-9"	16"	6"	1"	7'-0"	6'-1"	12'
30"	7' ø	2'-3"	4'-11"	16"	7"	2"	8'-2"	7'-3"	13'
36"	7' ø	2'-6"	5'-6"	16"	8"	2"	8'-9"	7'-10"	13'

*MINIMUM BURY DEPTH IS FROM FINISHED GRADE TO TOP OF PIPE

NOTES:
1. VAULT TOP SHALL BE PER MANHOLE LID ASSEMBLY DETAILS AS INDICATED ON THE DRAWINGS.
2. RISERS:
   2.1. DUCTILE IRON PIPE: PROVIDE TAPPING SADDLE WITH CC THREAD, BALL CORPORATION STOP CCxFLARE, COPPER RISER AND ¼ TURN BALL VALVE FLAREXFLARE PER SECTION 33 12 10.
   2.2. STEEL OR CPP: PROVIDE A THREADED OUTLET WITH CC THREAD, BALL CORPORATION STOP CCxFLARE, COPPER RISER AND ¼ TURN BALL VALVE FLAREXFLARE PER SECTION 33 12 10.
3. FOR ALL VALVES, TO OPEN, THE OPERATING NUT SHALL BE TURNED TO THE RIGHT (CLOCKWISE) DIRECTION.

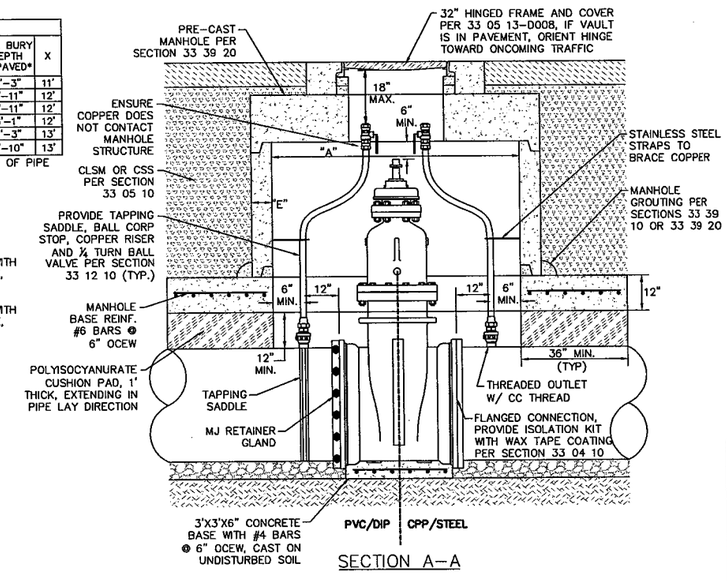

SECTION A-A

WATER TRANSMISSION GATE VALVE (16"-36")

DETAIL 33 12 20-D127

SCALE: N.T.S.

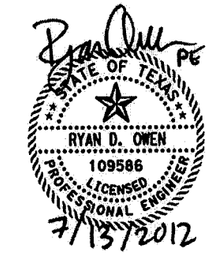

Kimley-Horn and Associates, Inc.
TEXAS REGISTERED ENGINEERING FIRM F-928

Texas Department of Transportation
© 2012

IH 35W FROM NORTH TARRANT PKWY TO IH 820

IH 35W UTILITY RELOCATIONS

WATER LINE DETAILS

SHEET 27 OF 54

DESIGN KHA	FED. RD. DIV. NO. 6	FEDERAL AID PROJECT NO. (SEE TITLE SHEET)		HIGHWAY NO. IH 35W
GRAPHICS KHA	STATE	DISTRICT	COUNTY	SHEET NO.
CHECK KHA	TEXAS	FTW	TARRANT	1365
CHECK KHA	CONTROL 0014	SECTION 16	JOB 255, ETC.	

FILENAME: S3BPUTIL*DETAILS*W02.dgn

DRAWING DATE: 7/13/2012

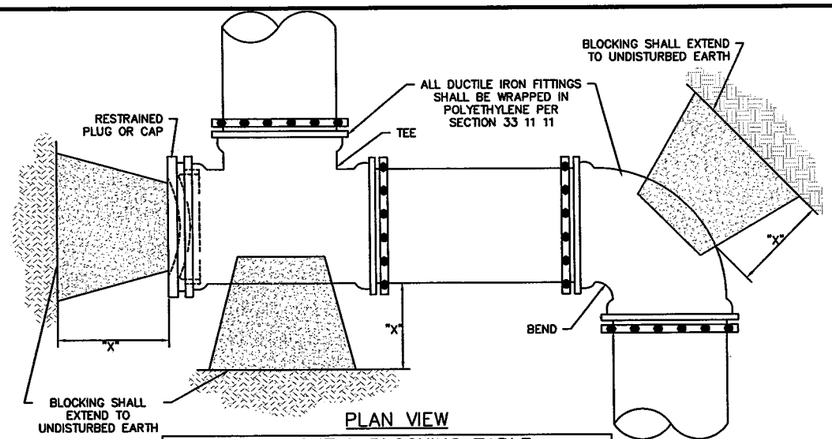

PLAN VIEW

HORIZONTAL BLOCKING TABLE						
PIPE SIZE	"X" DIM.**	PLUGS, TEES, DEAD-ENDS	90° BENDS	45° BENDS	22.5° BENDS	11.25° BENDS
		MIN. AREA (SF)	MIN. AREA (SF)	MIN. AREA (SF)	MIN. AREA (SF)	MIN. AREA (SF)
6"	1'-6"	4.77	6.75	4.00*	4.00*	4.00*
8"	1'-6"	8.48	12.00	6.49	4.00*	4.00*
10"	1'-6"	13.25	18.74	10.14	5.17	4.00*
12"	1'-6"	19.09	26.99	14.61	7.45	4.00*
16"	2'-0"	33.93	47.98	25.97	13.24	6.65
20"	2'-0"	53.01	74.97	40.58	20.69	10.39
24"	2'-0"	76.34	107.96	58.43	29.79	14.97

*MINIMUM THRUST BLOCKING SURFACE AREA SHALL BE 4SF.
**DIMENSION "X" TO BE A MINIMUM OF ONE FOOT AND SIX INCHES, BUT IS TO BE INCREASED WHERE NECESSARY TO PROVIDE BEARING AGAINST UNDISTURBED TRENCH WALL.

NOTES:
1. THRUST BLOCKING AREAS SHOWN ARE BASED ON 225 PSI TEST PRESSURE AND 2000 PSF ALLOWABLE SOIL BEARING PRESSURE WITH A FACTOR OF SAFETY OF 1.5 UNLESS NOTED OTHERWISE.
2. ALL DUCTILE IRON TEES, BENDS, PLUGS, ETC. SHALL BE MECHANICALLY RESTRAINED BY RETAINER GLAND.
3. THE CONTRACTOR IS REQUIRED TO PROVIDE THRUST RESTRAINT BY MEANS OF THRUST BLOCKING FOR ALL PIPES. THIS ITEM SHALL BE CONSIDERED SUBSIDIARY TO THE VARIOUS ITEMS BID.
4. THRUST BLOCKING SHALL BE SUBSIDIARY TO THE VARIOUS ITEMS BID.
5. ALL FITTINGS SHALL BE RESTRAINED WITH RETAINER GLANDS.
6. BLOCKING FOR WATER LINES LARGER THAN 24" SHALL BE DESIGNED AND SHOWN ON DRAWINGS.

HORIZONTAL BLOCKING
DETAIL 33 11 00-D130

SCALE: N.T.S.

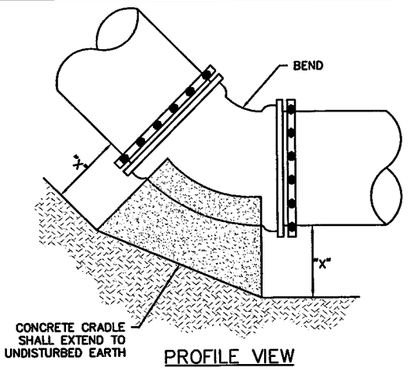

PROFILE VIEW

CONCRETE CRADLE TABLE					
PIPE SIZE	"X" DIM.**	90° BENDS	45° BENDS	22.5° BENDS	11.25° BENDS
		MIN. AREA (SF)	MIN. AREA (SF)	MIN. AREA (SF)	MIN. AREA (SF)
6"	1'-6"	6.75	4.00*	4.00*	4.00*
8"	1'-6"	12.00	6.49	4.00*	4.00*
10"	1'-6"	18.74	10.14	5.17	4.00*
12"	1'-6"	26.99	14.61	7.45	4.00*
16"	2'-0"	47.98	25.97	13.24	6.65
20"	2'-0"	74.97	40.58	20.69	10.39
24"	2'-0"	107.96	58.43	29.79	14.97

*MINIMUM THRUST BLOCKING SURFACE AREA SHALL BE 4SF.
**DIMENSION "X" TO BE A MINIMUM OF ONE FOOT AND SIX INCHES, BUT IS TO BE INCREASED WHERE NECESSARY TO PROVIDE BEARING AGAINST UNDISTURBED TRENCH WALL.

NOTES:
1. THIS DETAIL SHALL ONLY BE USED FOR VERTICAL PIPE BENDS IN A POSITIVE COUNTER-CLOCKWISE ANGLE AS SHOWN IN PROFILE ABOVE. VERTICAL TIE-DOWN BLOCKING PER 33 11 00-WTR-011A AND WTR-011B SHALL BE REQUIRED FOR PIPE BENDS IN A NEGATIVE COUNTER-CLOCKWISE ANGLE.
2. THRUST BLOCKING AREAS SHOWN ARE BASED ON 225 PSI TEST PRESSURE AND 2000 PSF ALLOWABLE SOIL BEARING PRESSURE WITH A FACTOR OF SAFETY OF 1.5 UNLESS NOTED OTHERWISE.
3. SURFACE AREAS REQUIRED IN TABLE ABOVE SHALL BE SURFACE AREA IN CONTACT WITH UNDISTURBED TRENCH BOTTOM AS SHOWN.
4. THE CONTRACTOR IS REQUIRED TO PROVIDE THRUST RESTRAINT BY MEANS OF CONCRETE CRADLING FOR ALL PIPES. THIS ITEM SHALL BE CONSIDERED SUBSIDIARY TO THE VARIOUS ITEMS BID.
5. ALL FITTINGS SHALL BE RESTRAINED WITH RETAINER GLANDS.
6. CRADLES FOR WATER LINES LARGER THAN 24" SHALL BE DESIGNED AND SHOWN ON DRAWINGS.

CONCRETE CRADLE
DETAIL 33 11 00-D131

SCALE: N.T.S.

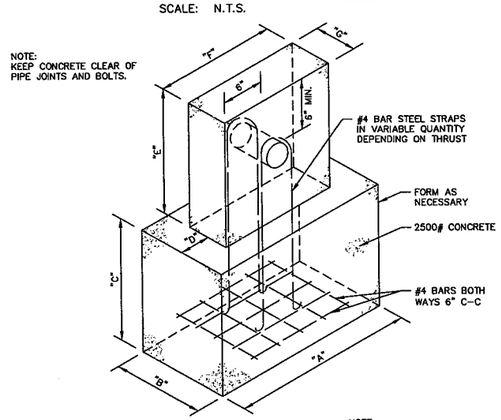

NOTE:
DIMENSIONS WILL BE SPECIFIED ON PLANS OR DIRECTED BY ENGINEER.

VERTICAL BLOCKING									
JOINT DIA. (INCHES)	TEST PRESSURE (PSIG)	UNIT WEIGHT CONCRETE (PCF)	JOINT AREA (SQ. IN.)	BEND ANGLE (DEG)	EXP. FORCE (LBS)	RED. VOL CONCRETE (CU. FT.)	RED. AREA STEEL (SQ. IN.)	RAW NO. 4 STRAPS	REQ. NO 4 STRAPS
24	250	150	452.39	11.25	22,171	147.81	1.03	2.59	3
				22.5	44,128	294.19	2.06	5.15	6
				45	86,561	577.07	4.04	10.10	11
				90	159,944	1066.29	7.46	18.66	19

VERTICAL TIE-DOWN BLOCK FOR LINES 16" AND LARGER
WTR-0011A

SCALE: N.T.S.

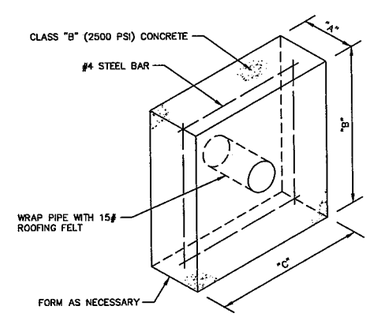

NOTE:
KEEP CONCRETE CLEAR OF PIPE JOINTS AND BOLTS

PIPE NOMINAL DIAMETER (IN.)		BENDS 90°	45°	22.5°	11.25°
6	*VOL. REQ'D. (C.F.)	39.99	21.64	11.03	5.54
	A (FT.)	2.50	1.42	1.00	0.75
	B (FT.)	4.00	3.88	3.36	2.75
	C (FT.)	4.00	3.88	3.36	2.75
8	*VOL. REQ'D. (C.F.)	71.09	38.47	19.61	9.85
	A (FT.)	2.83	1.67	1.50	1.00
	B (FT.)	5.00	4.80	3.66	3.20
	C (FT.)	5.00	4.80	3.66	3.20
10	*VOL. REQ'D. (C.F.)	111.07	60.11	30.65	15.40
	A (FT.)	3.25	1.92	1.75	1.50
	B (FT.)	5.90	5.60	4.25	3.25
	C (FT.)	5.90	5.60	4.25	3.25
12	*VOL. REQ'D. (C.F.)	159.94	86.56	44.13	22.17
	A (FT.)	4.17	2.42	1.42	1.25
	B (FT.)	6.20	6.00	5.54	4.20
	C (FT.)	6.20	6.00	5.54	4.20

*VOLUME CALCULATED ON THE BASIS OF CONCRETE REACTING THRUST ON THE RESPECTIVE BENDS UNDER AN INTERNAL PRESSURE OF 150 PSIG AT THE RATE OF 150 LB. WT. PER CUBIC FEET OF CONCRETE.

VERTICAL TIE-DOWN BLOCK FOR LINES 12" AND SMALLER
WTR-0011B

SCALE: N.T.S.

Ryan Owen PE
STATE OF TEXAS
RYAN D. OWEN
109586
LICENSED
PROFESSIONAL ENGINEER
7/13/2012

Kimley-Horn and Associates, Inc.
TEXAS REGISTERED ENGINEERING FIRM F-928

Texas Department of Transportation
© 2012

IH 35W FROM NORTH TARRANT PKWY TO IH 820

IH 35W UTILITY RELOCATIONS
WATER LINE DETAILS

SHEET 28 OF 54

DESIGN KHA	FED. RD. DIV. NO. 6	FEDERAL AID PROJECT NO. (SEE TITLE SHEET)		HIGHWAY NO. IH 35W
GRAPHICS KHA	STATE TEXAS	DISTRICT FTW	COUNTY TARRANT	SHEET NO. 1366
CHECK KHA	CONTROL 0014	SECTION 16	JOB 255, ETC.	
CHECK KHA				

FILENAME: S3BPUTIL*DETAILS*W03.dgn
DRAWING DATE: 7/13/2012

NOTES:

1. DO NOT LOCATE FIRE HYDRANT IN SIDEWALK.
2. PROVIDE FOUR (4) FOOT CLEARANCE AROUND FIRE HYDRANT.
3. EXTENSION SECTIONS MAY BE USED AS REQUIRED AND MUST BE INSTALLED AS PER MANUFACTURER'S INSTRUCTIONS.
4. FOR CONCRETE PRESSURE PIPE OR BURIED STEEL PIPE, PROVIDE AN ISOLATION KIT AND WAX TAPE COATING PER SECTION 33 04 10 AND FLxMJ GATE VALVE.

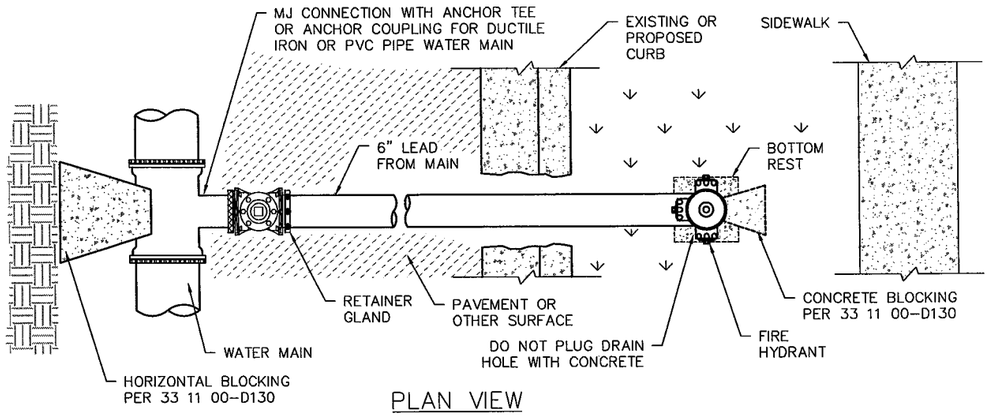

PLAN VIEW

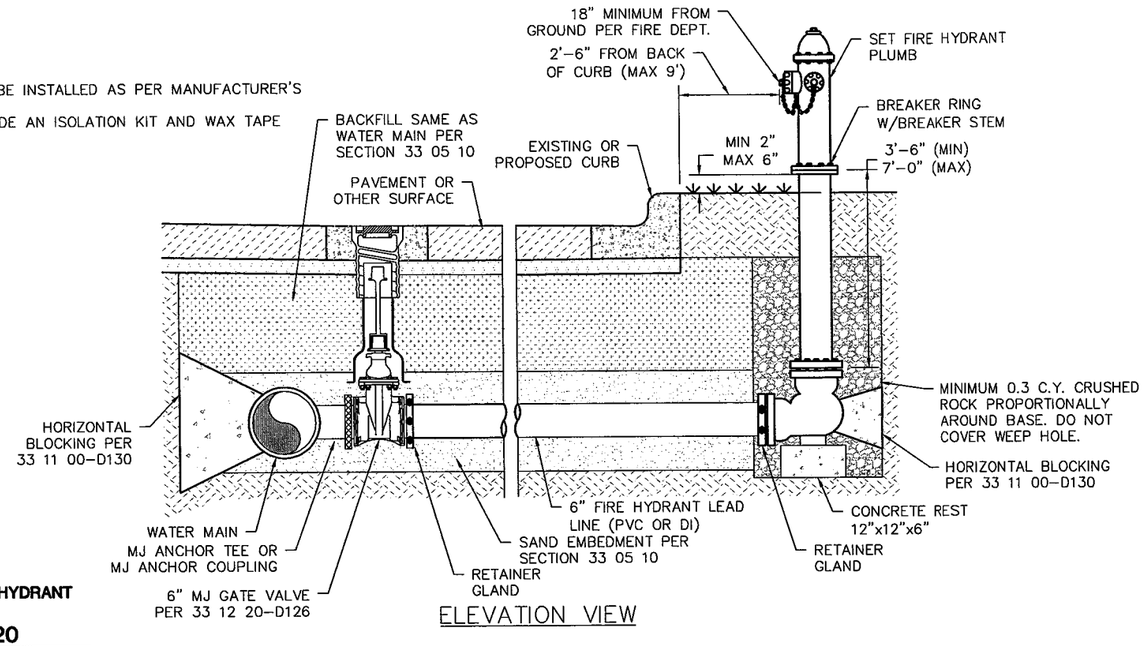

ELEVATION VIEW

STANDARD FIRE HYDRANT (STRAIGHT)
33 12 40-D120

SCALE: N.T.S.

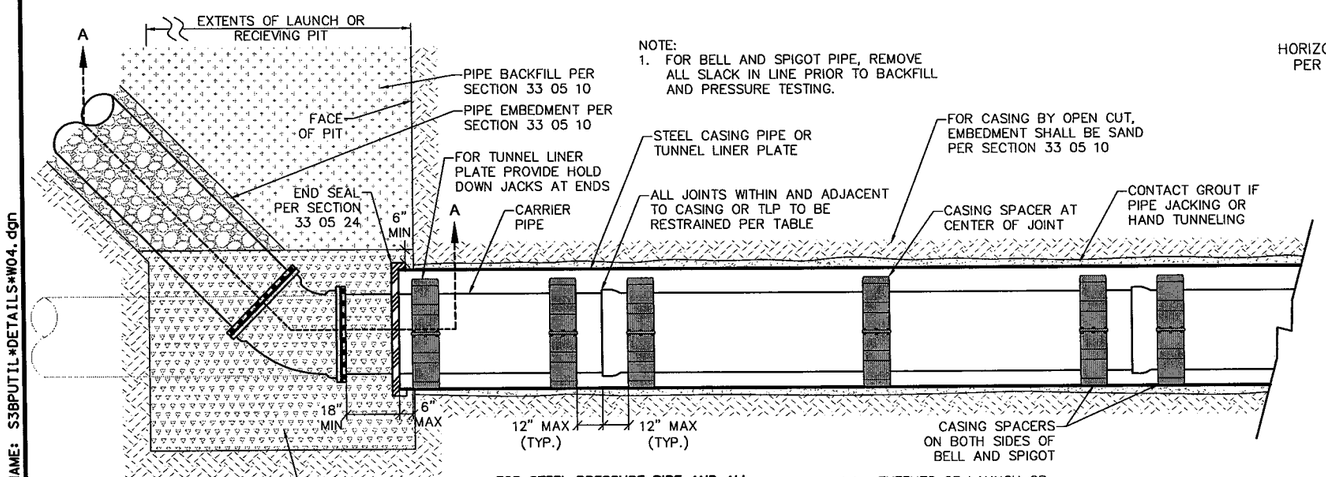

NOTE:
1. FOR BELL AND SPIGOT PIPE, REMOVE ALL SLACK IN LINE PRIOR TO BACKFILL AND PRESSURE TESTING.

FOR STEEL PRESSURE PIPE AND ALL CARRIER PIPE 48" AND LARGER, CASING SPACER SPACING SHALL BE DESIGNATED BY ENGINEER

RESTRAINED JOINTS				
	DIP DIAMETERS 8"-16"	DIP DIAMETERS 24"-48"	DIP DIAMETERS 54" & LARGER	STEEL PIPE ALL SIZES
FITTINGS	MECHANICAL JOINT WITH MEGALUGS	MJ WITH MEGALUGS OR RESTRAINED PUSH-ON JOINT*	FLANGED OR LOK-RING** JOINTS	WELDED JOINTS
PIPE	BELL & SPIGOT WITH GRIPPER GASKET	RESTRAINED PUSH-ON JOINT*	LOK-RING** JOINTS	WELDED JOINTS

*TR-FLEX BY US PIPE, FLEX-RING BY ACIPCO, OR APPROVED EQUAL
** LOK-RING BY ACIPCO, OR APPROVED EQUAL

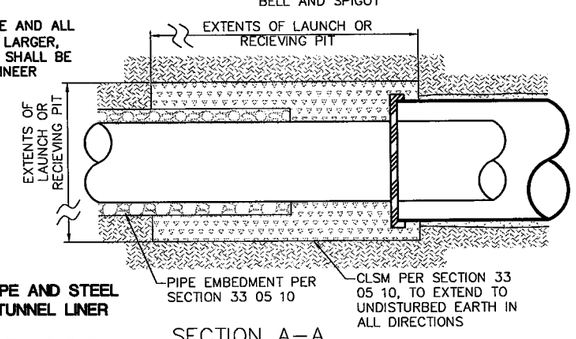

SECTION A-A

DUCTILE IRON PIPE AND STEEL PIPE CASING & TUNNEL LINER PLATE PROFILE
DETAIL 33 05 24-D108

SCALE: N.T.S.

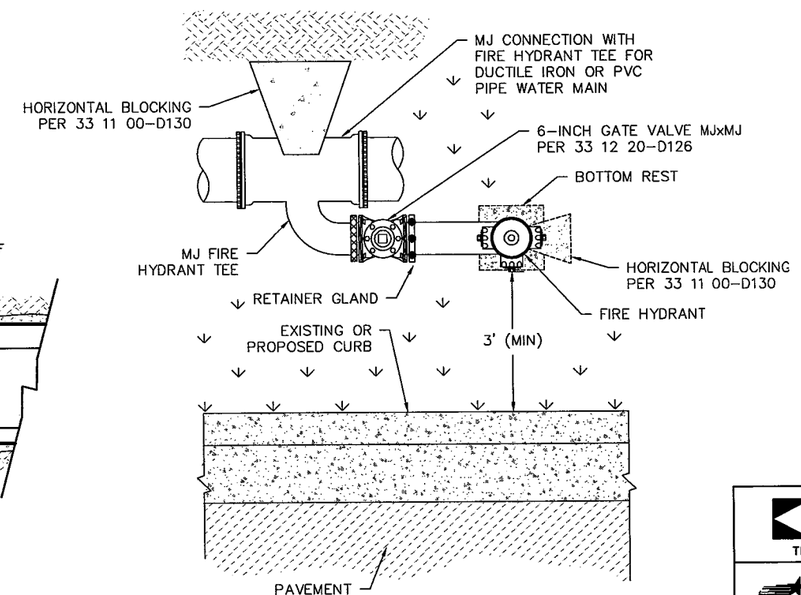

NOTES:
1. REFER TO 33 12 40-D120 FOR PROFILE VIEW.
2. USE THIS DETAIL FOR 12" AND SMALLER MAINS ONLY.

STANDARD FIRE HYDRANT (ELL)
33 12 40-D121

SCALE: N.T.S.

STATE OF TEXAS
RYAN D. OWEN
109586
LICENSED PROFESSIONAL ENGINEER
7/13/2012

Kimley-Horn and Associates, Inc.
TEXAS REGISTERED ENGINEERING FIRM F-928

Texas Department of Transportation
© 2012

IH 35W FROM NORTH TARRANT PKWY TO IH 820

IH 35W UTILITY RELOCATIONS
WATER LINE DETAILS

SHEET 29 OF 54

DESIGN KHA	FED. RD. DIV. NO. 6	FEDERAL AID PROJECT NO. (SEE TITLE SHEET)		HIGHWAY NO. IH 35W
GRAPHICS KHA	STATE TEXAS	DISTRICT FTW	COUNTY TARRANT	SHEET NO. 1367
CHECK KHA	CONTROL 0014	SECTION 16	JOB 255, ETC.	
CHECK KHA				

FILENAME: S3BPUTIL*DETAILS*W04.dgn
DRAWING DATE: 7/13/2012

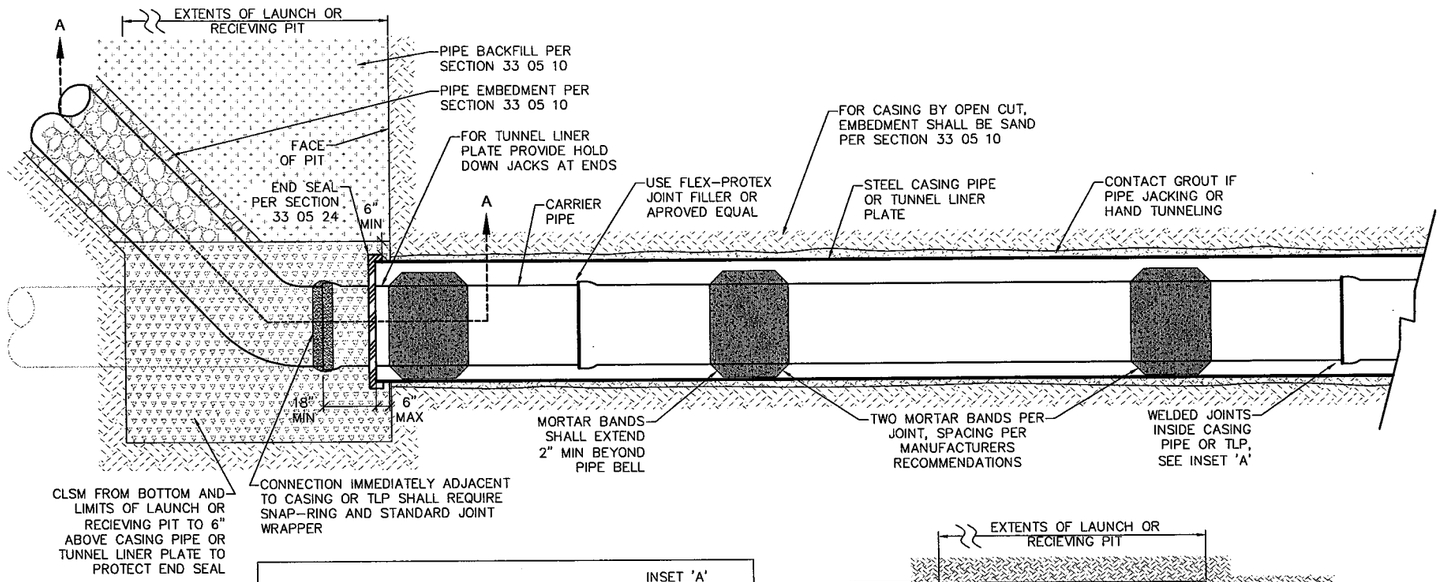

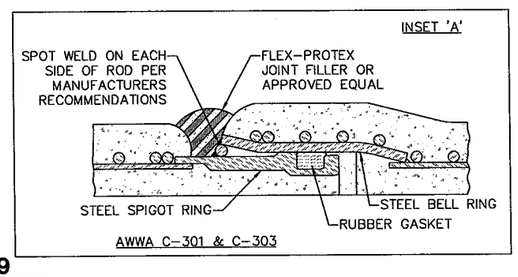

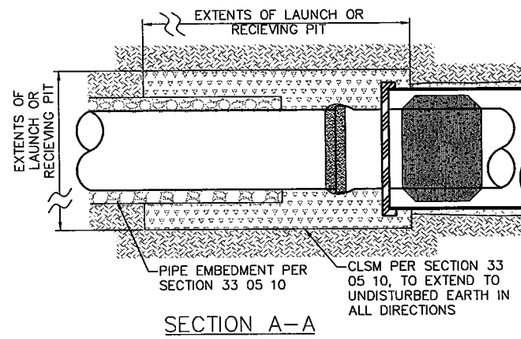

SECTION A–A

CONCRETE PRESSURE PIPE CASING & TUNNEL LINER PLATE PROFILE

DETAIL 33 05 24-D109

SCALE: N.T.S.

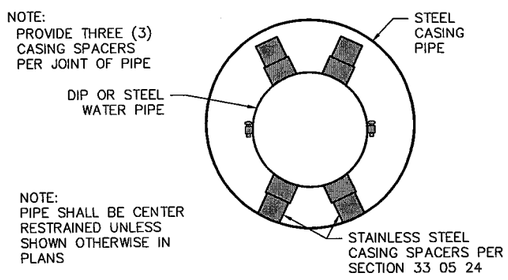

DIP AND STEEL PIPE SMALLER THAN 48" WITH STEEL CASING

STEEL CASING PIPE MINIMUM WALL THICKNESS SCHEDULE	
CASING PIPE NOMINAL DIAMETER	MINIMUM WALL THICKNESS
12"-16"	0.3125" (5/16")
20"-24"	0.375" (3/8")
26"-32"	0.5" (1/2")
34"-42"	0.625" (5/8")
44"-48"	0.6875" (11/16")
GREATER THAN 48"	TO BE DESIGNATED BY ENGINEER

CASING PIPE SCHEDULE				
NOMINAL CARRIER PIPE SIZE	DIP BELL OD w/ REQUIRED RESTRAINT	MIN CASING STEEL ID	STEEL PIPE BELL OD	MIN CASING STEEL ID
6"	8.6"	12"	-	-
8"	11.16"	16"	-	-
10"	13.25"	18"	-	-
12"	15.22"	20"	-	-
14"	17.73"	24"	-	-
16"	19.86"	26"	-	-
18"	22.16"	28"	-	-
20"	24.28"	30"	-	-
24"	29.88"	36"	24.75"	36"
30"	36.34"	42"	30.75"	42"
36"	42.86"	50"	36.75"	48"
42"	49.92"	56"	42.75"	54"

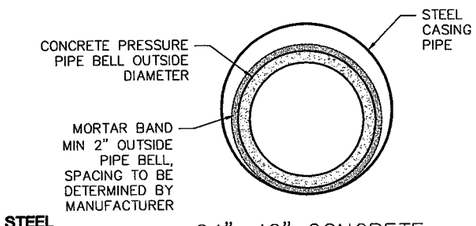

24"–42" CONCRETE PRESSURE PIPE WITH STEEL CASING

CASING PIPE SCHEDULE				
NOMINAL CARRIER PIPE SIZE	CPP BELL OD (C-301)	MIN CASING STEEL ID	CPP BELL OD (C-303)	MIN CASING STEEL ID
24"	30"	42"	29"	42"
27"	33.5"	42"	32"	42"
30"	36.5"	48"	35"	48"
33"	40"	48"	38"	48"
36"	43.5"	54"	41"	54"
39"	47"	60"	44"	54"
42"	50.5"	60"	47"	60"

WATER CARRIER PIPE IN STEEL CASING

DETAIL 33 05 24-D106

SCALE: N.T.S.

Kimley-Horn and Associates, Inc.
TEXAS REGISTERED ENGINEERING FIRM F-928

Texas Department of Transportation
© 2012

IH 35W FROM NORTH TARRANT PKWY TO IH 820

IH 35W UTILITY RELOCATIONS

WATER LINE DETAILS

SHEET 30 OF 54

DESIGN	FED. RD. DIV. NO.	FEDERAL AID PROJECT NO.		HIGHWAY NO.
KHA	6	(SEE TITLE SHEET)		IH 35W
GRAPHICS KHA	STATE	DISTRICT	COUNTY	SHEET NO.
CHECK KHA	TEXAS	FTW	TARRANT	1368
CHECK KHA	CONTROL	SECTION	JOB	
	0014	16	255, ETC.	

FILENAME: S3BPUTIL*DETAILS*W05.dgn

DRAWING DATE: 7/13/2012

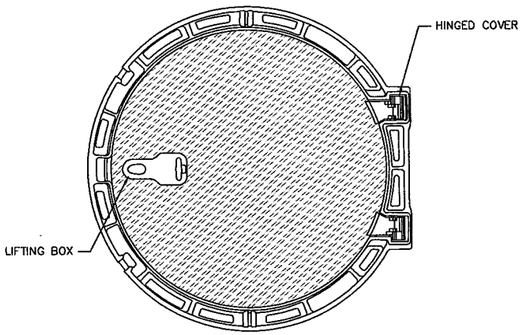

PLAN VIEW – FRAME AND COVER

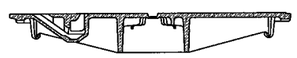

PROFILE VIEW – COVER

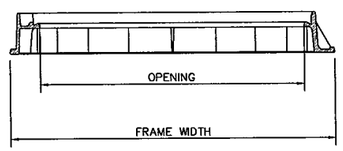

PROFILE VIEW – FRAME

NOTES:
1. PROVIDE HINGED FRAME AND COVER WHERE INDICATED IN THE DRAWINGS AND ON DETAILS.
2. HINGED LIDS SHALL HAVE MARKER LABELS INDICATING "WATER", "SANITARY SEWER", OR "STORM DRAIN" AS THE CASE MAY BE ALONG WITH FORT WORTH LOGO PER SECTION 33 05 13.
3. ALL HINGED FRAMES AND COVERS SHALL REQUIRE A WATER TIGHT GASKET.
4. FOR WATER AND SANITARY SEWER, ALL TYPES OF FRAMES SHALL ALLOW MINIMUM 30-INCH OPENING, UNLESS OTHERWISE SPECIFIED IN THE DRAWINGS.
5. FOR STORM DRAIN ALL TYPES OF FRAMES SHALL ALLOW MINIMUM 24-INCH OR 30-INCH OPENINGS PER SECTION 33 05 13, UNLESS OTHERWISE SPECIFIED IN THE DRAWINGS.

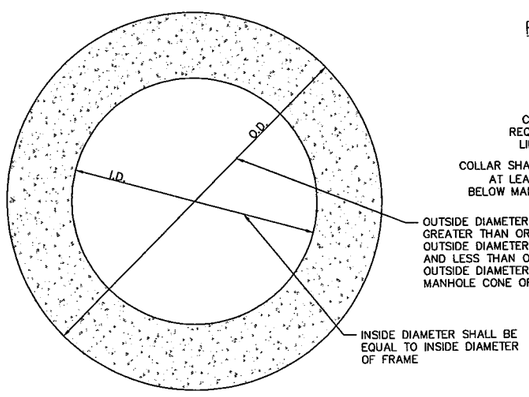

PLAN VIEW – GRADE RINGS

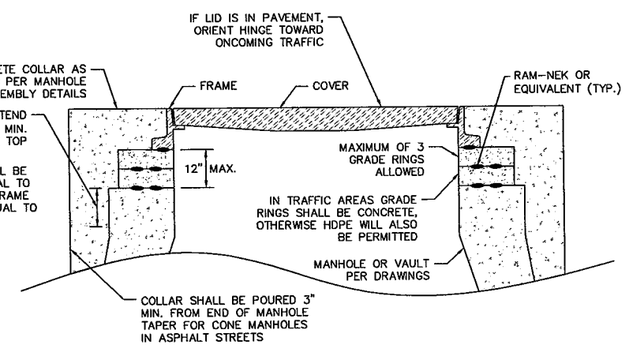

WATER TIGHT HINGED MANHOLE FRAME, COVER, AND GRADE RINGS

DETAIL 33 05 13-D008

SCALE: N.T.S.

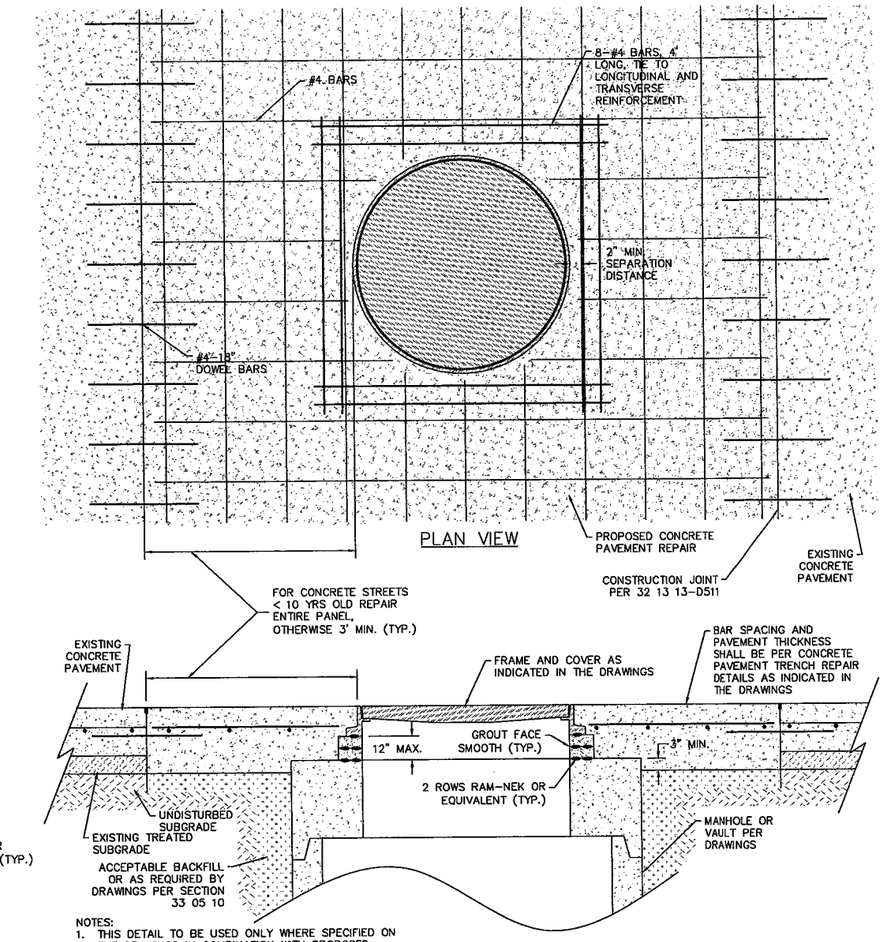

PLAN VIEW

SECTION VIEW

NOTES:
1. THIS DETAIL TO BE USED ONLY WHERE SPECIFIED ON THE DRAWINGS IN COMBINATION WITH PROPOSED MANHOLE OR VAULT IN THE SAME LOCATION.
2. ALL MEASUREMENTS ARE TYPICAL FOR ALL SIDES OF MANHOLE/VAULT LID ASSEMBLY.
2. IF GRADE RINGS ARE USED THEY SHALL BE NO LESS THAN 2" THICK, AND SHALL NOT EXCEED 12" IN TOTAL HEIGHT. NO MORE THAN 3 TOTAL GRADE RINGS. SHALL BE ALLOWED.
4. FOR CONCRETE STREETS LESS THAN 10 YEARS OLD, ENTIRE PANEL SHALL BE REPLACED, OTHERWISE REPLACED CONCRETE SHALL EXTEND A MINIMUM OF 3' BEYOND MANHOLE IN ALL DIRECTIONS.
5. CONCRETE PAVING SHALL BE PAID AS A SEPARATE ITEM.

MANHOLE LID ASSEMBLY - EXISTING CONCRETE PAVEMENT (FLAT TOP)

DETAIL 33 05 13-D013

SCALE: N.T.S.

Kimley-Horn and Associates, Inc.
TEXAS REGISTERED ENGINEERING FIRM F-928

Texas Department of Transportation
© 2012

IH 35W FROM NORTH TARRANT PKWY TO IH 820

IH 35W UTILITY RELOCATIONS

WATER LINE DETAILS

SHEET 31 OF 54

DESIGN	FED. RD. DIV. NO.	FEDERAL AID PROJECT NO.		HIGHWAY NO.
KHA	6	(SEE TITLE SHEET)		IH 35W
GRAPHICS KHA	STATE	DISTRICT	COUNTY	SHEET NO.
CHECK KHA	TEXAS	FTW	TARRANT	1369
CHECK KHA	CONTROL	SECTION	JOB	
	0014	16	255, ETC.	

FILENAME: S3BPUTIL*DETAILS*W06.dgn

DRAWING DATE: 7/13/2012

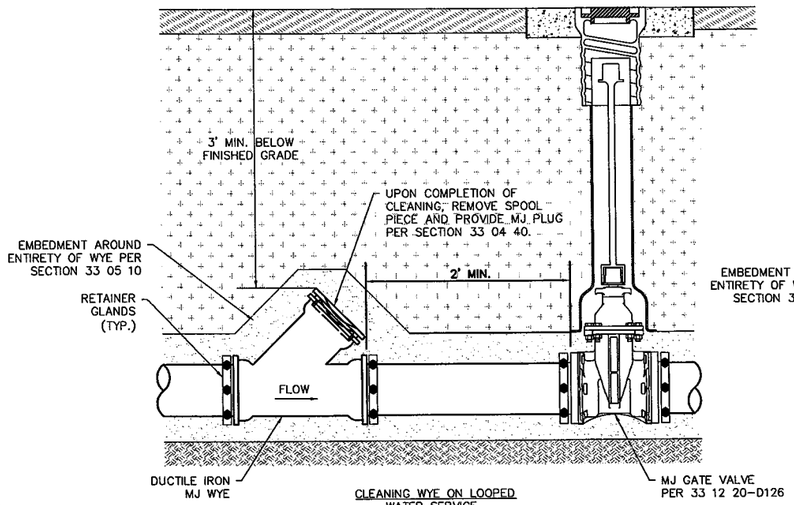

CLEANING WYE ON LOOPED WATER SERVICE

NOTES:
1. WYES SHALL ONLY BE LOCATED WHERE INDICATED ON THE DRAWINGS.
2. ALL WATER PIPING 12" AND SMALLER SHALL BE DUCTILE IRON OR PVC.

STANDARD CLEANING WYE
(12" AND SMALLER)
33 04 40-D135

SCALE: N.T.S.

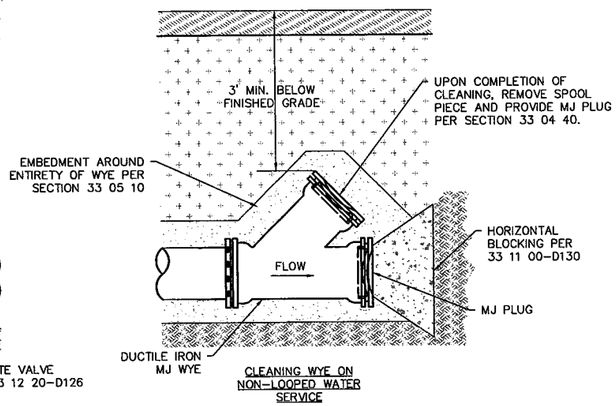

CLEANING WYE ON NON-LOOPED WATER SERVICE

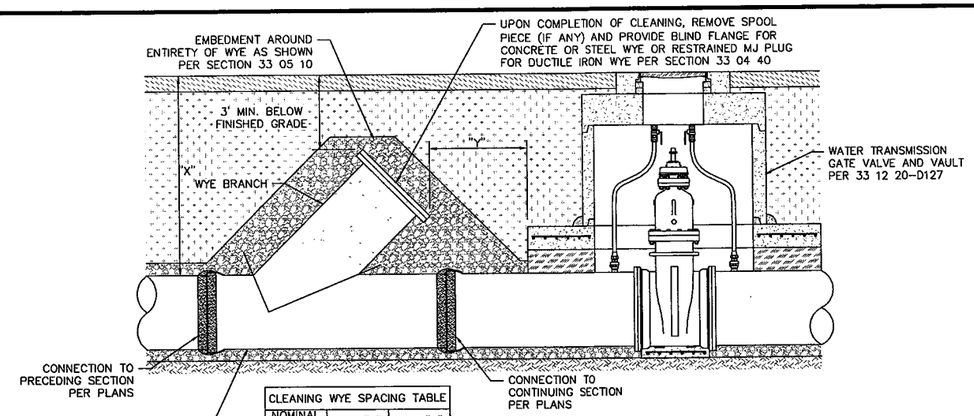

CLEANING WYE SPACING TABLE		
NOMINAL PIPE ø	MIN. "X"	MIN. "Y"
16"	5'-8"	4'
18"	5'-9"	4'
20"	6'-6"	4'
24"	6'-9"	4'
30"	7'-3"	5'
36"	8'-1"	5'

NOTES:
1. "Y" DIMENSION ONLY APPLIES WHERE GATE VALVE VAULTS ARE IN THE VICINITY OF A PROPOSED CLEANING WYE.
2. PROVIDE TEMPORARY INTERNAL PLUG FOR TESTING.
3. COAT FLANGES IN WAX TAPE PER SECTIONS 33 11 13 AND 33 11 14.
4. FOR DUCTILE IRON WATER MAINS, MJ WYE SHALL BE RESTRAINED TO ADJACENT PIPE WITH RETAINER GLANDS AND MJ PLUG SHALL BE RESTRAINED DIRECTLY TO FITTING WITH T-BOLTS.
5. WYES SHALL ONLY BE LOCATED WHERE INDICATED ON THE DRAWINGS.

STANDARD CLEANING WYE
(16" AND LARGER)
33 04 40-D136

SCALE: N.T.S.

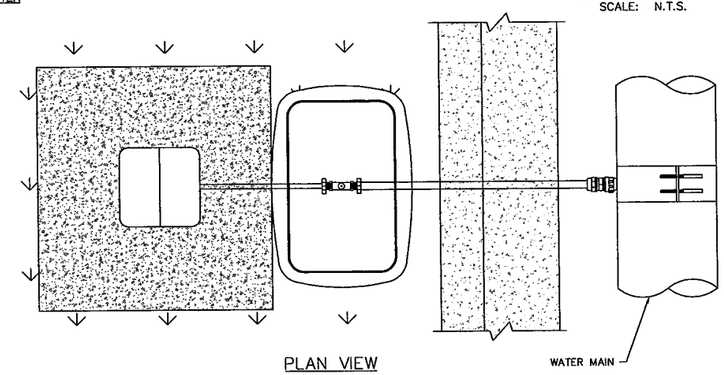

PLAN VIEW

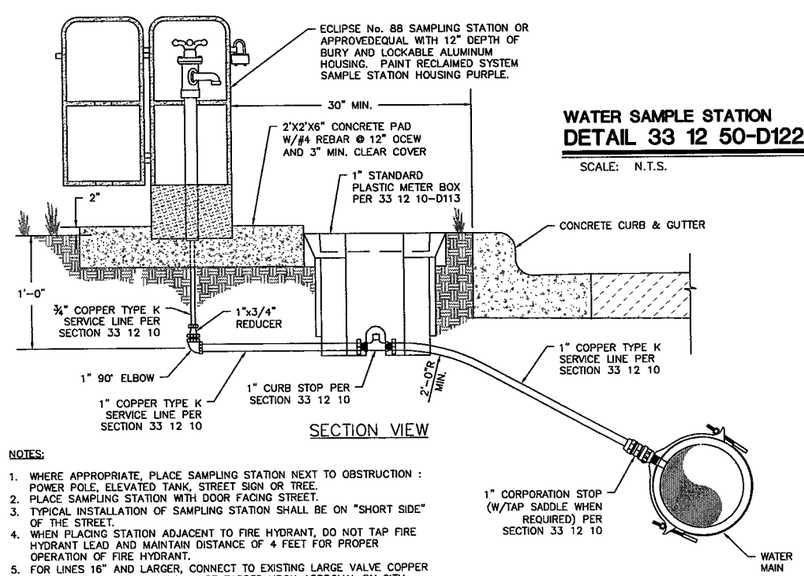

SECTION VIEW

NOTES:
1. WHERE APPROPRIATE, PLACE SAMPLING STATION NEXT TO OBSTRUCTION : POWER POLE, ELEVATED TANK, STREET SIGN OR TREE.
2. PLACE SAMPLING STATION WITH DOOR FACING STREET.
3. TYPICAL INSTALLATION OF SAMPLING STATION SHALL BE ON "SHORT SIDE" OF THE STREET.
4. WHEN PLACING STATION ADJACENT TO FIRE HYDRANT, DO NOT TAP FIRE HYDRANT LEAD AND MAINTAIN DISTANCE OF 4 FEET FOR PROPER OPERATION OF FIRE HYDRANT.
5. FOR LINES 16" AND LARGER, CONNECT TO EXISTING LARGE VALVE COPPER RISER. LARGE MAINS MAY ONLY BE TAPPED UPON APPROVAL BY CITY.
6. PAINT ABOVE GROUND PIPES & FITTINGS, BOX, AND HOUSING PURPLE WHEN CONNECTED TO RECLAIMED WATER PIPING.

WATER SAMPLE STATION
DETAIL 33 12 50-D122

SCALE: N.T.S.

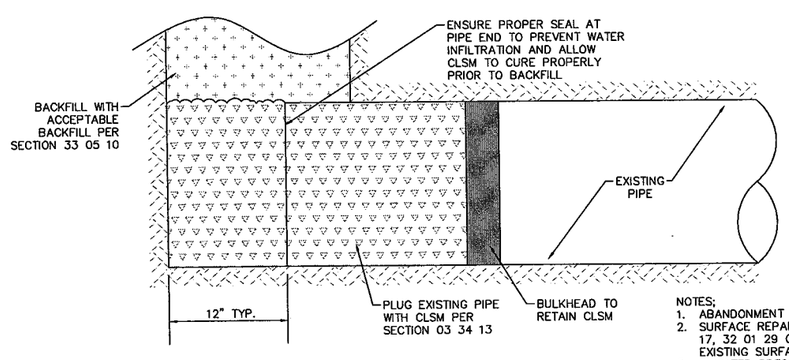

NOTES;
1. ABANDONMENT SHALL BE PER SECTION 02 41 14
2. SURFACE REPAIR SHALL BE PER SECTIONS 32 01 17, 32 01 29 OR 32 14 16 DEPENDING ON EXISTING SURFACE
3. A WATER PRESSURE PLUG PER 02 41 14-D121 SHALL BE AN ACCEPTABLE ALTERNATIVE WHERE APPLICABLE.

PIPE ABANDONMENT PLUG
DETAIL 02 41 14-D007

SCALE: N.T.S.

Kimley-Horn and Associates, Inc.
TEXAS REGISTERED ENGINEERING FIRM F-928

Texas Department of Transportation
© 2012

IH 35W FROM NORTH TARRANT PKWY TO IH 820

IH 35W UTILITY RELOCATIONS
WATER LINE DETAILS

SHEET 32 OF 54

DESIGN	FED.RD. DIV.NO.	FEDERAL AID PROJECT NO.		HIGHWAY NO.
KHA	6	(SEE TITLE SHEET)		IH 35W
GRAPHICS	STATE	DISTRICT	COUNTY	SHEET NO.
KHA	TEXAS	FTW	TARRANT	1370
CHECK	CONTROL	SECTION	JOB	
KHA	0014	16	255, ETC.	

FILENAME: S3BPUTIL*DETAILS*W07.dgn

DRAWING DATE: 7/13/2012

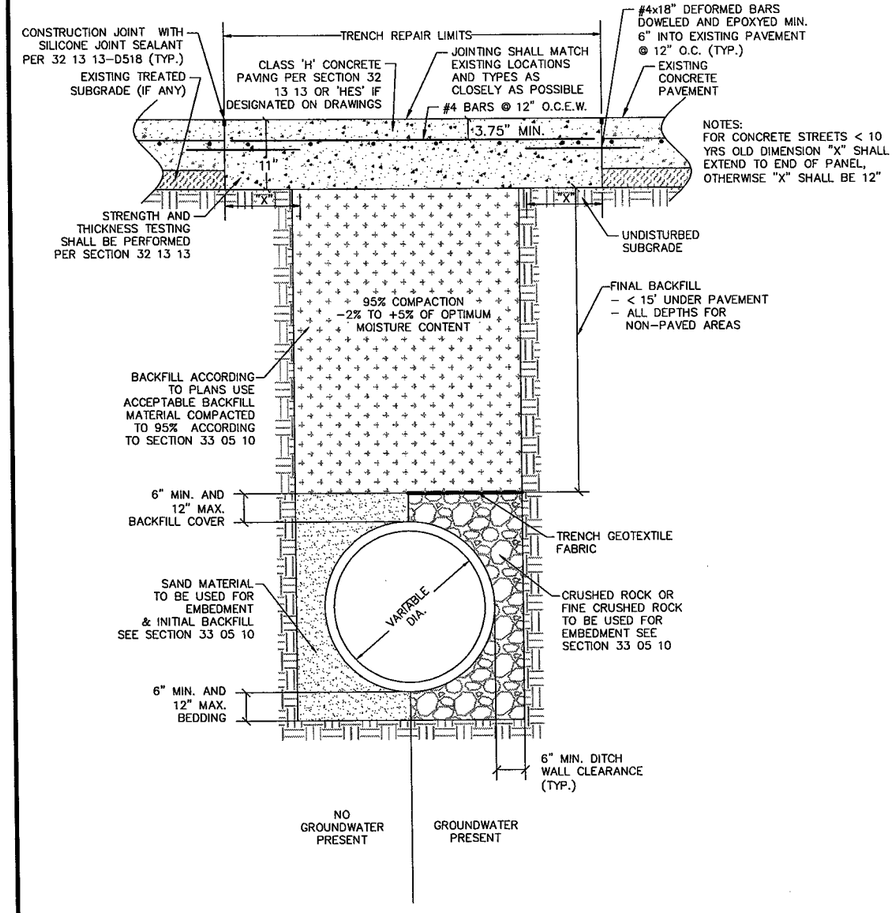

NOTE:
IF CRUSHED ROCK IS NOT IDENTIFIED IN THE CONTRACT DOCUMENTS IT SHALL BE PAID FOR BY PRE-BID UNIT PRICE

32 01 29-D522 PERMANENT CONCRETE PAVEMENT TRENCH REPAIR ARTERIAL STREETS
33 05 10-D001 ACCEPTABLE BACKFILL
33 05 10-D101 EMBEDMENT FOR WATER LINES 12" AND SMALLER

D522 D001 D101 — 33

SCALE: N.T.S.

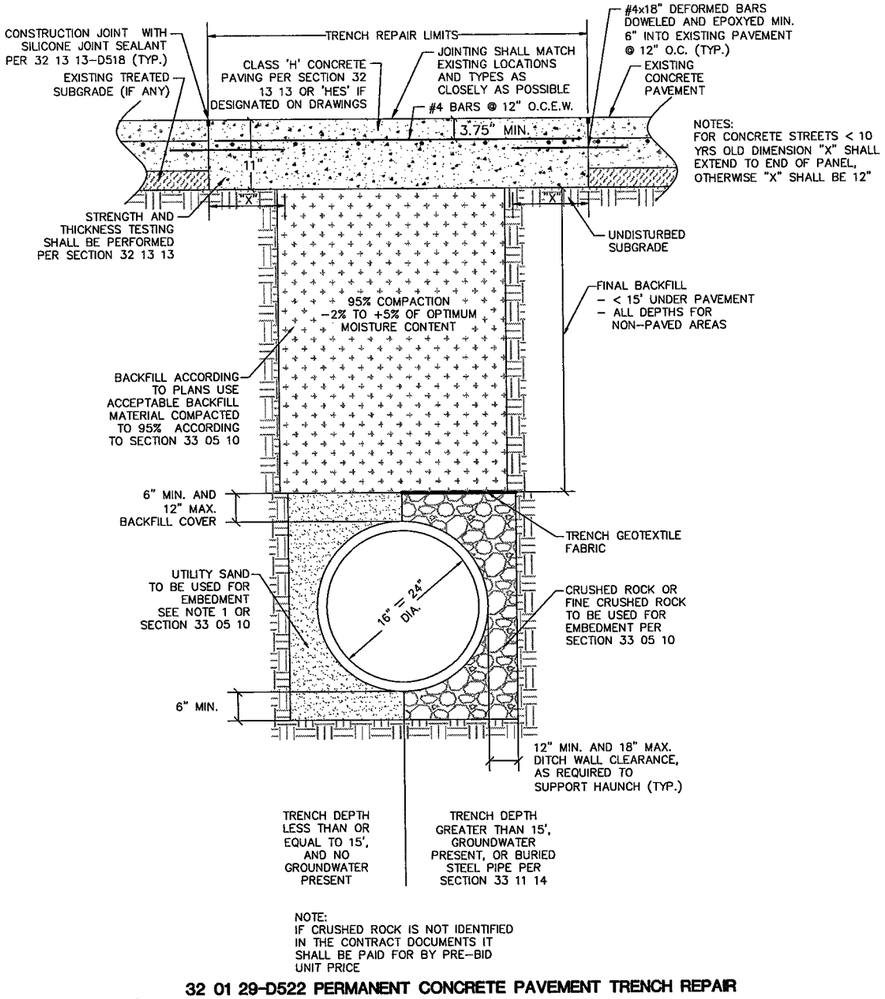

NOTE:
IF CRUSHED ROCK IS NOT IDENTIFIED IN THE CONTRACT DOCUMENTS IT SHALL BE PAID FOR BY PRE-BID UNIT PRICE

32 01 29-D522 PERMANENT CONCRETE PAVEMENT TRENCH REPAIR ARTERIAL STREETS
33 05 10-D001 ACCEPTABLE BACKFILL
33 05 10-D102 EMBEDMENT FOR WATER LINES 16" TO 24"

D522 D001 D102 — 33

SCALE: N.T.S.

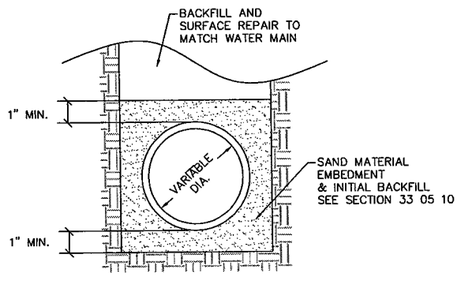

NOTE:
THIS DETAIL ONLY APPLIES TO OPEN-CUT SERVICES

EMBEDMENT FOR WATER SERVICES
DETAIL 33 05 10-D104

SCALE: N.T.S.

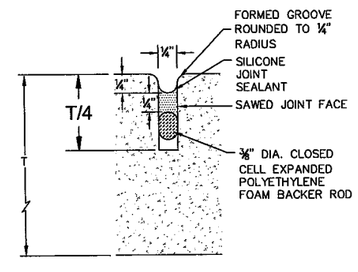

SAWED JOINT
DETAIL 32 13 13-D518

SCALE: N.T.S.

STATE OF TEXAS
RYAN D. OWEN
109586
LICENSED PROFESSIONAL ENGINEER
7/13/2012

Kimley-Horn and Associates, Inc.
TEXAS REGISTERED ENGINEERING FIRM F-928

Texas Department of Transportation
© 2012

IH 35W FROM NORTH TARRANT PKWY TO IH 820

IH 35W UTILITY RELOCATIONS
WATER LINE DETAILS

SHEET 33 OF 54

DESIGN	FED. RD. DIV. NO.	FEDERAL AID PROJECT NO.		HIGHWAY NO.
KHA	6	(SEE TITLE SHEET)		IH 35W
GRAPHICS KHA	STATE	DISTRICT	COUNTY	SHEET NO.
CHECK KHA	TEXAS	FTW	TARRANT	1371
CHECK KHA	CONTROL	SECTION	JOB	
	0014	16	255, ETC.	

FILENAME: S38PUTIL*DETAILS*W08.dgn

DRAWING DATE: 7/13/2012

NOTE:
- ONLY C-303 PIPE OR STEEL MAY BE CONNECTED AT MID-JOINT

CONNECTING DUCTILE IRON PIPE TO EXISTING CPP

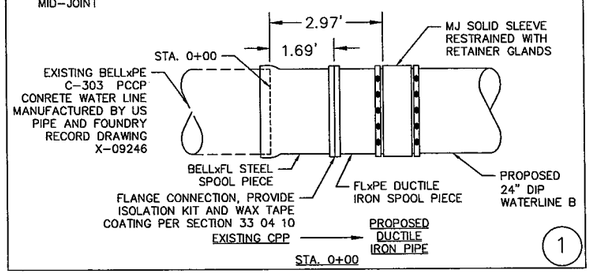

NOTE:
- ONLY C-303 PIPE OR STEEL MAY BE CONNECTED AT MID-JOINT

CONNECTING CPP TO EXISTING CPP

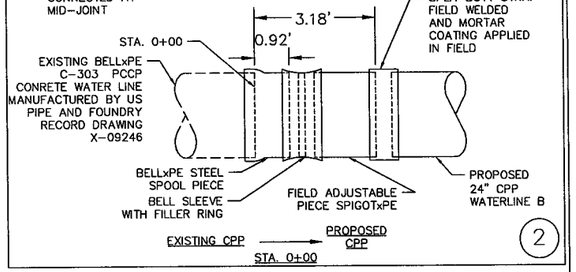

CONNECTING CPP TO EXISTING CPP

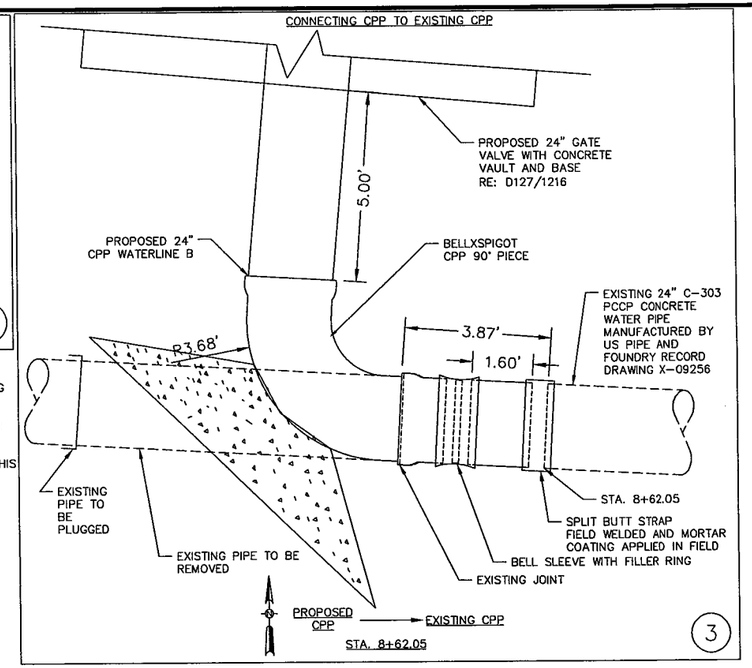

CONNECTING DUCTILE IRON PIPE TO EXISTING CPP

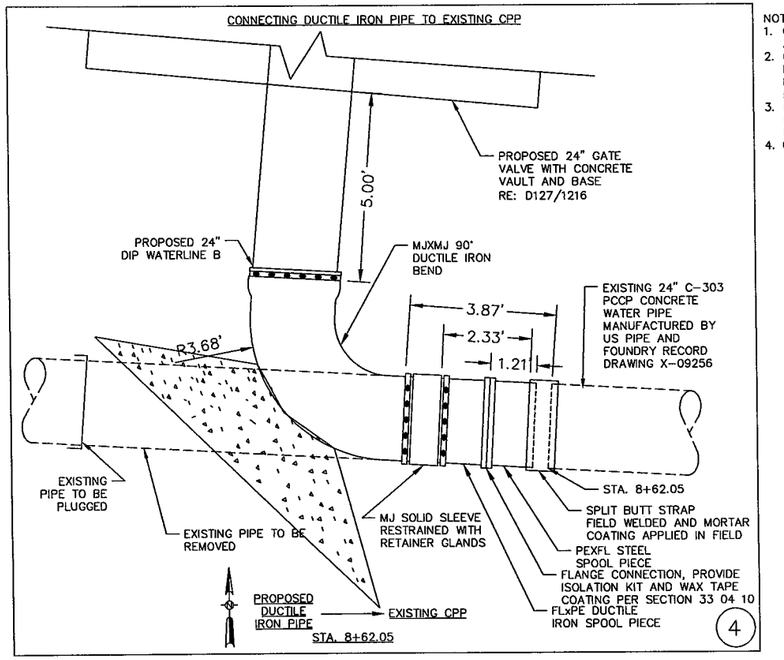

NOTES:
1. CONTRACTOR SHALL FOLLOW THE SHUT DOWN AND SEQUENCING AS SHOWN ON SHEET 1201.
2. CONTRACTOR SHALL EXCAVATE AND VERIFY EXISTING PIPE HORIZONTAL AND VERTICAL LOCATIONS AND OUTSIDE DIAMETER PRIOR TO SHOP DRAWING SUBMITTAL. EXCAVATE WILL NOT BE PERMITTED BELOW THE SPRING LINE.
3. CONTRACTOR CAN REQUEST ALTERNATE CONFIGURATION FOR THIS CONNECTION BY SUBMITTING THE REQUEST WITH THE SHOP DRAWINGS.
4. CONTRACTOR SHALL INSTALL A CONCRETE DIAPER AT EACH CONNECTION TO THE EXISTING WATER LINE.

CONNECTION TO EXISTING WATER MAINS DETAILS 1-4

SCALE: N.T.S.

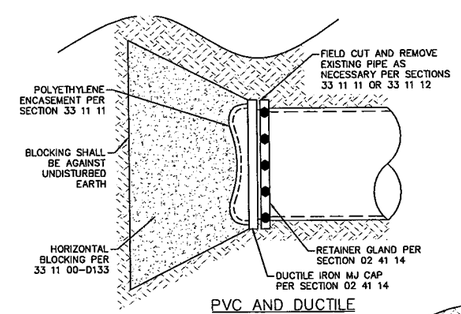

PVC AND DUCTILE IRON PLAIN END PRESSURE PLUG

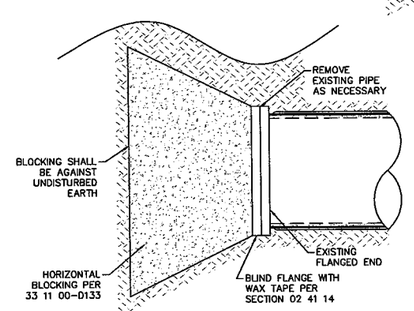

CPP, STEEL PIPE AND DIP FLANGED END PRESSURE PLUG

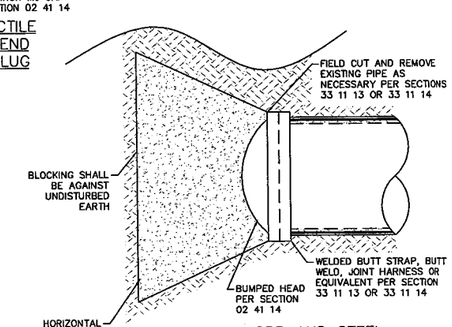

CPP AND STEEL PLUG PLAIN END PRESSURE PLUG

NOTES:
1. ALL ABANDONMENT SHALL BE PER SECTION 02 41 14.
2. SURFACE REPAIR SHALL BE PER SECTIONS 32 01 17, 32 01 29 OR 32 14 16 DEPENDING ON EXISTING SURFACE AND AS DESIGNATED ON THE PLANS.
3. CAST-IN-PLACE CONCRETE SHALL BE PER SECTION 03 30 00.
4. ALLOW CONCRETE BLOCKING TO CURE FOR 24 HOURS PRIOR TO PRESSURIZING WATER LINE.

WATER PIPE PRESSURE PLUGS DETAIL 02 41 14-D121

SCALE: N.T.S.

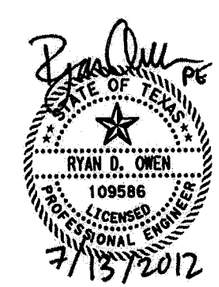

Kimley-Horn and Associates, Inc.
TEXAS REGISTERED ENGINEERING FIRM F-928

Texas Department of Transportation
© 2012

IH 35W FROM NORTH TARRANT PKWY TO IH 820

IH 35W UTILITY RELOCATIONS WATER LINE DETAILS

SHEET 34 OF 54

DESIGN	FED.RD. DIV.NO.	FEDERAL AID PROJECT NO.		HIGHWAY NO.
KHA	6	(SEE TITLE SHEET)		IH 35W
GRAPHICS	STATE	DISTRICT	COUNTY	SHEET NO.
KHA	TEXAS	FTW	TARRANT	1372
CHECK	CONTROL	SECTION	JOB	
KHA	0014	16	255, ETC.	

DRAWING DATE: 7/13/2012 FILENAME: S3BPUTIL*DETAILS*W09.dgn

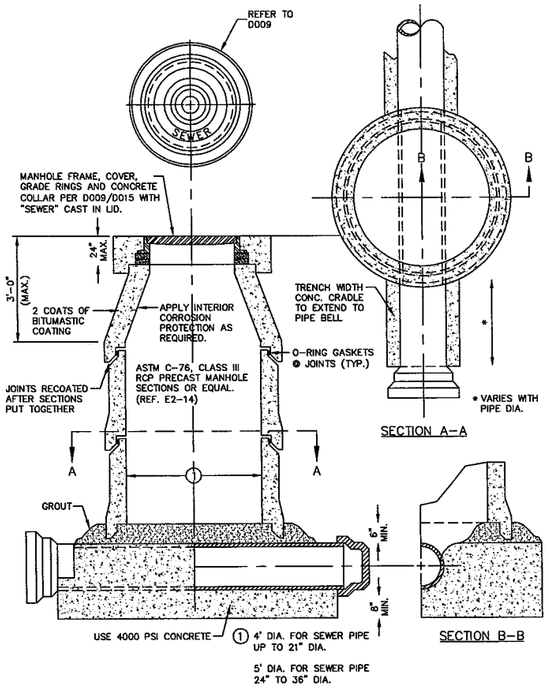

STANDARD 4' DIAMETER ACCESS MANHOLE
SAN-003M

SCALE: N.T.S.

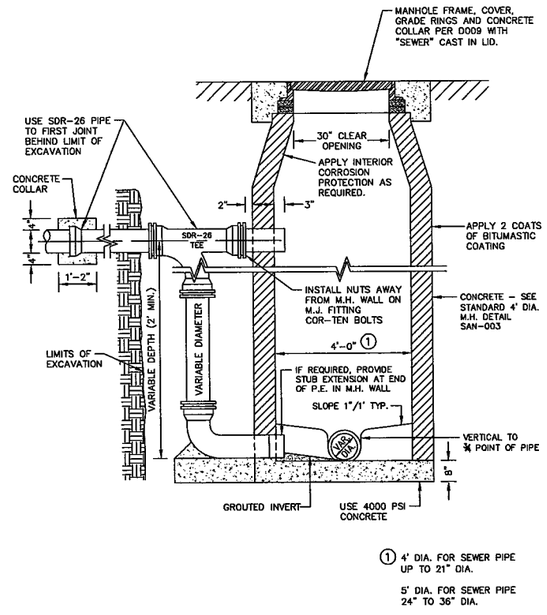

STANDARD 4' DIAMETER ACCESS DROP MANHOLE
SAN-005M

SCALE: N.T.S.

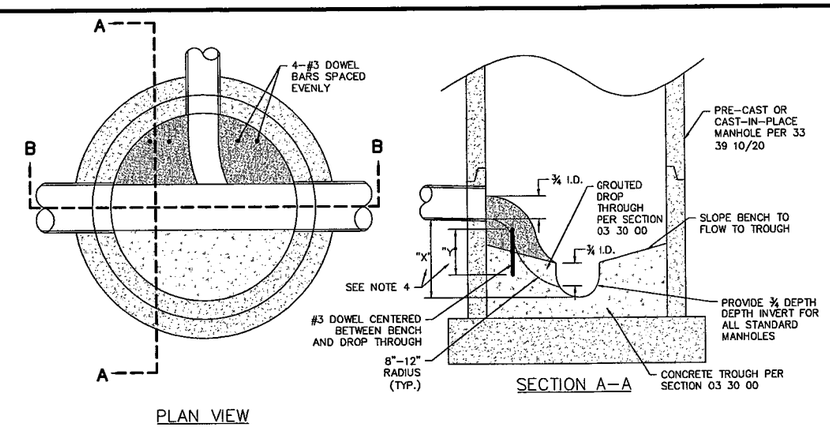

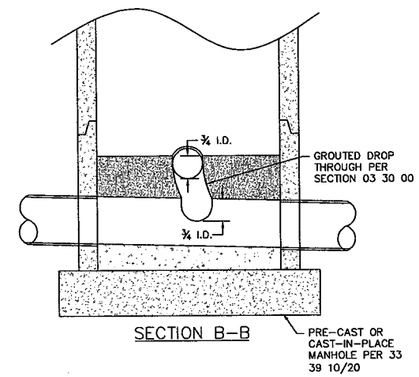

NOTES:
1. DROP THROUGH SHALL BE POURED MONOLITHICALLY WITH CAST-IN-PLACE BENCH, OR DOWELED AND GROUTED TO PRE-CAST BENCH.
2. DROP THROUGH SHALL EXTEND INTO MAIN-LINE TROUGH ½ THE INNER DIAMETER OF LATERAL.
3. WHERE LATERAL FLOW-LINE TO MAIN FLOW-LINE IS GREATER THAN 24" AN EXTERNAL DROP SHALL BE REQUIRED PER 33 39 10/20-SAN-005M
4. "X" SHALL BE NO MORE THAN 24" FROM FLOW-LINE TO FLOW-LINE. "Y" SHALL BE THE GREATER OF HALF OF "X" OR 6".

HYDRAULIC SLIDE
33 29 10/20-D207

SCALE: N.T.S.

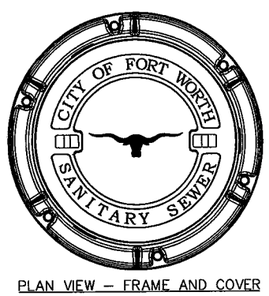

PLAN VIEW - FRAME AND COVER

PROFILE VIEW - COVER

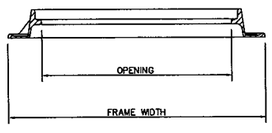

PROFILE VIEW - FRAME

NOTES:
1. PROVIDE STANDARD FRAME AND COVER WHERE NOT OTHERWISE INDICATED IN THE DRAWINGS OR ON THE DETAILS.
2. FRAME AND COVER, LIDS SHALL BE CAST WITH "WATER", "SANITARY SEWER", OR "STORM DRAIN" AS THE CASE MAY BE ALONG WITH FORT WORTH LONGHORN PER SECTION 33 05 13.
3. ALL FRAMES AND COVERS SHALL REQUIRE A STAINLESS STEEL WATER TIGHT INSERT.
4. FOR WATER AND SANITARY SEWER, ALL TYPES OF FRAMES SHALL ALLOW MINIMUM 30-INCH OPENING, UNLESS OTHERWISE SPECIFIED IN THE DRAWINGS.
5. FOR STORM DRAIN ALL TYPES OF FRAMES SHALL ALLOW MINIMUM 24-INCH OR 30-INCH OPENINGS PER SECTION 33 05 13, UNLESS OTHERWISE SPECIFIED IN THE DRAWINGS.

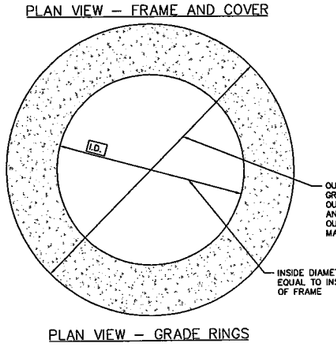

PLAN VIEW - GRADE RINGS

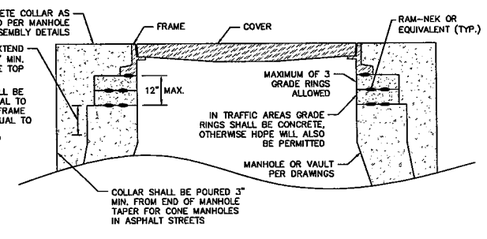

NON-HINGED MANHOLE FRAME, COVER AND GRADE RINGS
DETAIL 33 05 13-D009

SCALE: N.T.S.

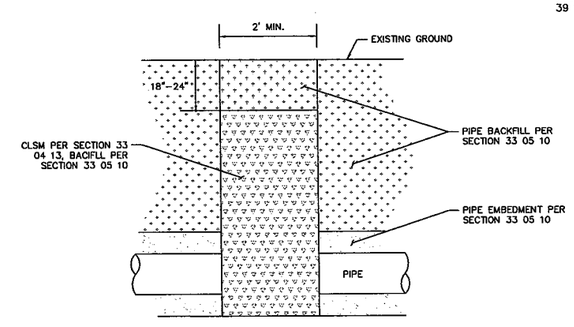

TYPICAL PROFILE

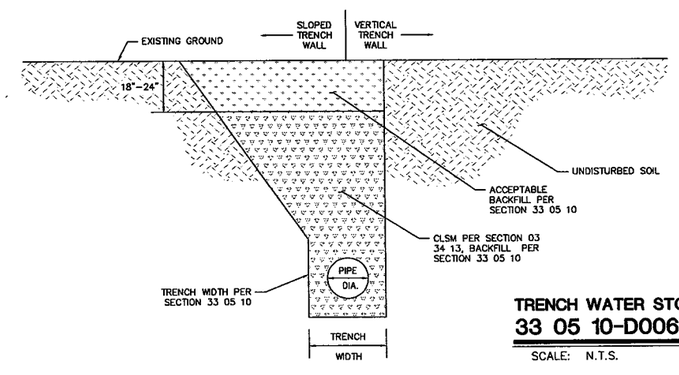

TYPICAL SECTION

TRENCH WATER STOPS
33 05 10-D006

SCALE: N.T.S.

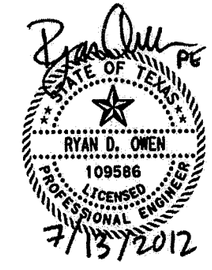

Kimley-Horn and Associates, Inc.
TEXAS REGISTERED ENGINEERING FIRM F-928

Texas Department of Transportation
© 2012

IH 35W FROM NORTH TARRANT PKWY TO IH 820

IH 35W UTILITY RELOCATIONS
WASTEWATER LINE DETAILS

SHEET 35 OF 54

DESIGN	FED. RD. DIV. NO.	FEDERAL AID PROJECT NO.		HIGHWAY NO.
KHA	6	(SEE TITLE SHEET)		IH 35W
GRAPHICS KHA	STATE	DISTRICT	COUNTY	SHEET NO.
CHECK KHA	TEXAS	FTW	TARRANT	1373
CHECK KHA	CONTROL	SECTION	JOB	
	0014	16	255, ETC.	

FILENAME: S3BPUTIL*DETAILS*WW01.dgn

DRAWING DATE: 7/13/2012

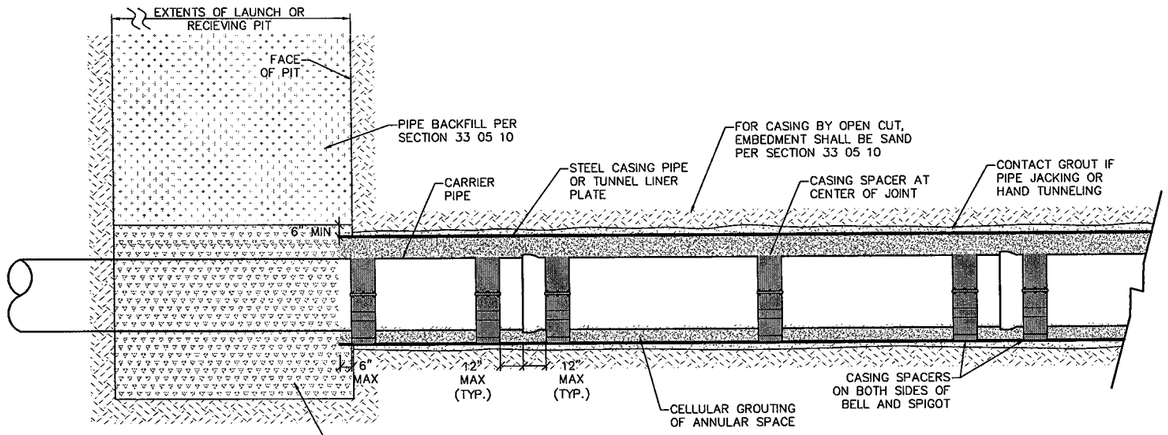

SANITARY SEWER CARRIER PIPE CASING AND TUNNEL LINER PLATE PROFILE
33 05 24-D204

SCALE: N.T.S.

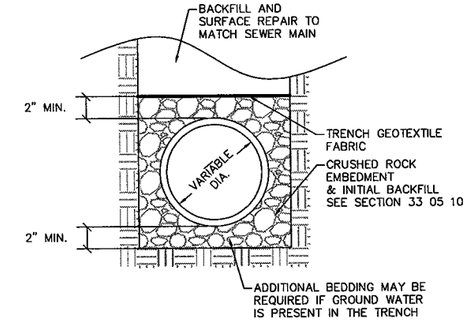

EMBEDMENT FOR SANITARY SEWER SERVICES
DETAIL 33 05 10-D202

SCALE: N.T.S.

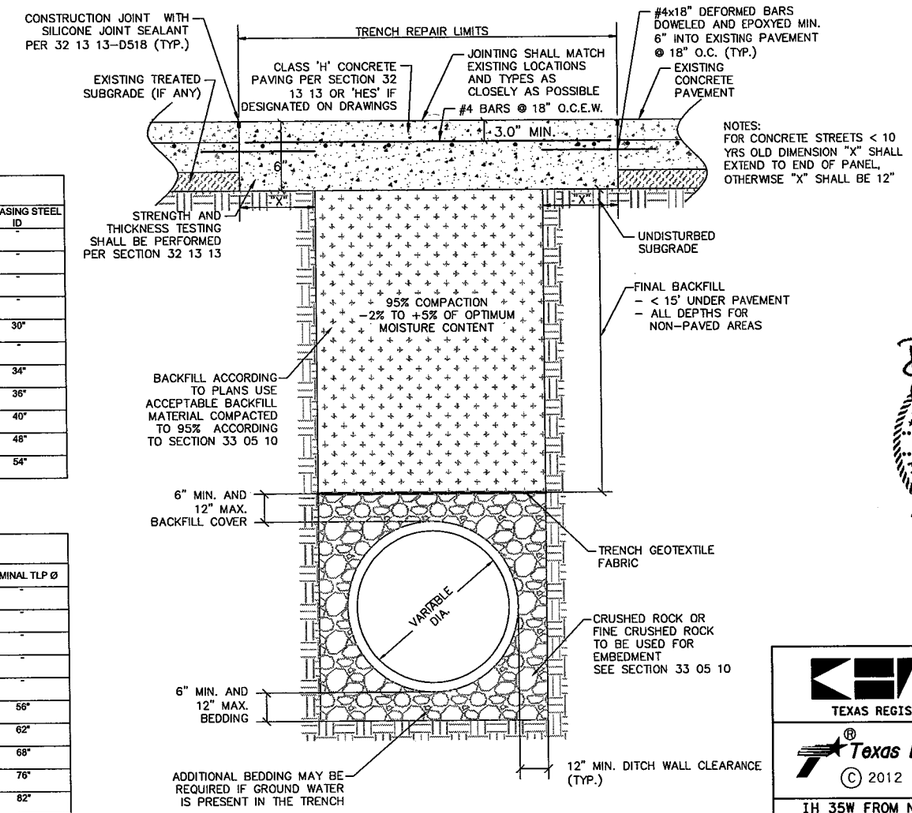

NOTES:
1. PROVIDE THREE (3) CASING SPACERS PER JOINT OF PIPE.
2. GENERALLY SEWER CARRIER PIPE SHALL BE CENTERED IN CASING PIPE, BUT VARIATIONS WILL BE ALLOWED TO ACHIEVE PROPOSED GRADE ON PLANS

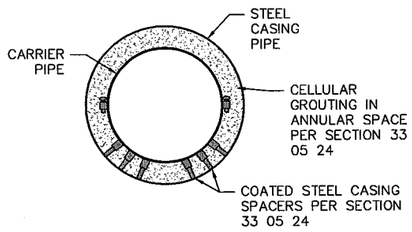

SANITARY SEWER PIPE WITH STEEL CASING

STEEL CASING PIPE MINIMUM WALL THICKNESS SCHEDULE	
CASING PIPE NOMINAL DIAMETER	MINIMUM WALL THICKNESS
12"-18"	0.3125" (5/16")
20"-24"	0.375" (3/8")
26"-32"	0.5" (1/2")
34"-42"	0.625" (5/8")
44"-48"	0.6875" (11/16")
GREATER THAN 48"	0.875 (7/8")

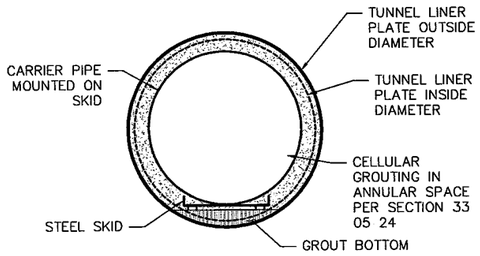

SANITARY SEWER PIPE 36" AND LARGER WITH TUNNEL LINER PLATE

SANITARY SEWER CARRIER PIPE INSTALLATION IN STEEL CASING AND TUNNEL LINER PLATE
33 05 24-D203

SCALE: N.T.S.

CASING PIPE SCHEDULE				
NOMINAL CARRIER PIPE SIZE	SS PVC/DI PIPE BELL OD	MIN CASING STEEL ID	FIBERGLASS PIPE COUPLING OD	MIN CASING STEEL ID
8"	9.692"	16"	-	-
10"	12.116"	18"	-	-
12"	14.424"	20"	-	-
15"	17.652"	24"	-	-
18"	20.845"	28"	21.3"	30"
21"	24.575"	32"	-	-
24"	27.647"	34"	27.6"	34"
27"	31.157"	38"	29.8"	36"
30"	35.612"	42"	33.9"	40"
36"	42.816"	50"	40.2"	48"
42"	49.604"	56"	46.5"	54"

TUNNEL LINER PLATE SCHEDULE				
NOMINAL CARRIER PIPE SIZE	SS PVC/DI PIPE BELL OD	NOMINAL TLP Ø	SS FIBERGLASS PIPE COUPLING OD	NOMINAL TLP Ø
18"	20.845"	48"	-	-
21"	24.575"	48"	-	-
24"	27.647"	48"	-	-
27"	31.157"	48"	-	-
30"	35.612"	52"	-	-
36"	42.816"	58"	40.2"	56"
42"	49.604"	66"	46.5"	62"
48"	-	-	52.9"	68"
54"	-	-	59.4"	76"
60"	-	-	65.5"	82"

D523
D001
D201

36

SURFACE REPAIR TO PREVIOUS CONDITIONS
32 01 29-D523 PERMANENT CONCRETE PAVEMENT TRENCH REPAIR RESIDENTIAL STREETS
33 05 10-D001 ACCEPTABLE BACKFILL
33 05 10-D201 EMBEDMENT FOR SANITARY SEWER LINES ALL SIZES

SCALE: N.T.S.

STATE OF TEXAS
RYAN D. OWEN
109586
LICENSED PROFESSIONAL ENGINEER
7/13/2012

Kimley-Horn and Associates, Inc.
TEXAS REGISTERED ENGINEERING FIRM F-928

Texas Department of Transportation
© 2012

IH 35W FROM NORTH TARRANT PKWY TO IH 820

IH 35W UTILITY RELOCATIONS
WASTEWATER LINE DETAILS

SHEET 36 OF 54

DESIGN KHA	FED.RD. DIV.NO. 6	FEDERAL AID PROJECT NO. (SEE TITLE SHEET)		HIGHWAY NO. IH 35W
GRAPHICS KHA	STATE	DISTRICT	COUNTY	SHEET NO.
CHECK KHA	TEXAS	FTW	TARRANT	1374
CHECK KHA	CONTROL 0014	SECTION 16	JOB 255, ETC.	

FILENAME: S3BPUTIL*DETAILS*WW02.dgn
DRAWING DATE: 7/13/2012

NOTES:
1. MANHOLE TOP SHALL BE PER MANHOLE LID ASSEMBLY DETAILS AS INDICATED ON THE DRAWINGS.
2. TEE TO BE SADDLE MOUNTED AND GLASSED IN PLACE BY PIPE MANUFACTURER.
3. MANHOLES WITH A HORIZONTAL DEFLECTION ANGLE SHALL BE MITERED BY THE MANUFACTURER ACCORDING TO TABLE ABOVE.
4. CONCRETE SURROUNDING SEWER PIPE SHALL BE AS WIDE AS NECESSARY TO ALLOW FOR 6" MIN. DISTANCE BETWEEN OUTSIDE OF MANHOLE AND EDGE OF STRUCTURE.

HORIZONTAL DEFLECTION AT MANHOLE			
HORIZ. Δ	MITERS	LAY LENGTH	TURNING RADIUS
0°	0	7 ft.	–
1° < 30°	1	7 ft.	66 in.
31° < 60°	2	8.75 ft.	66 in.
61° < 90°	3	13 ft.	66 in.

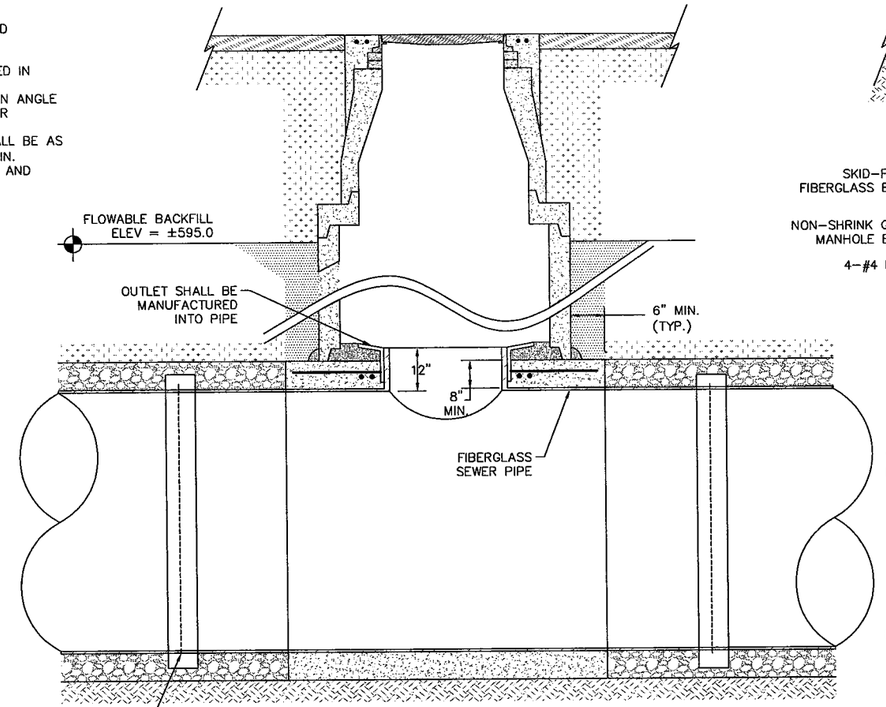

PROFILE VIEW

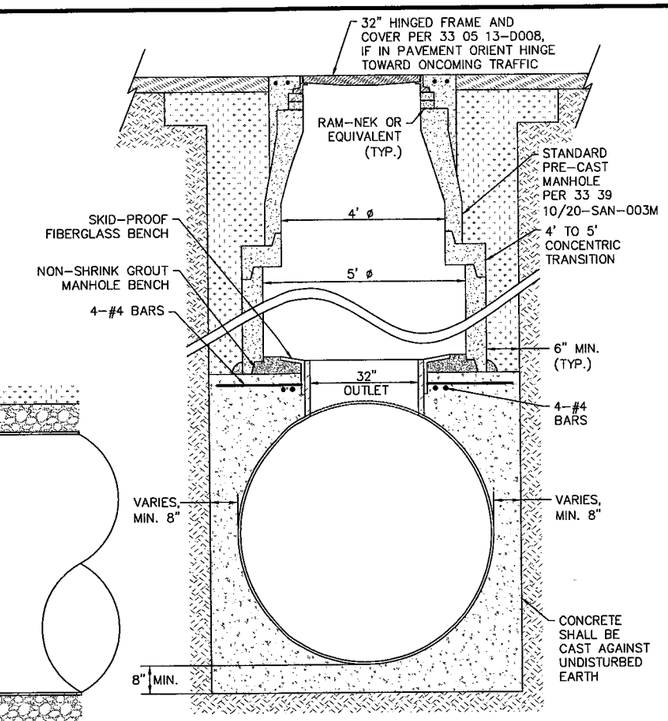

SECTION VIEW

TEE BASE MANHOLE
33 39 30-D213

SCALE: N.T.S.

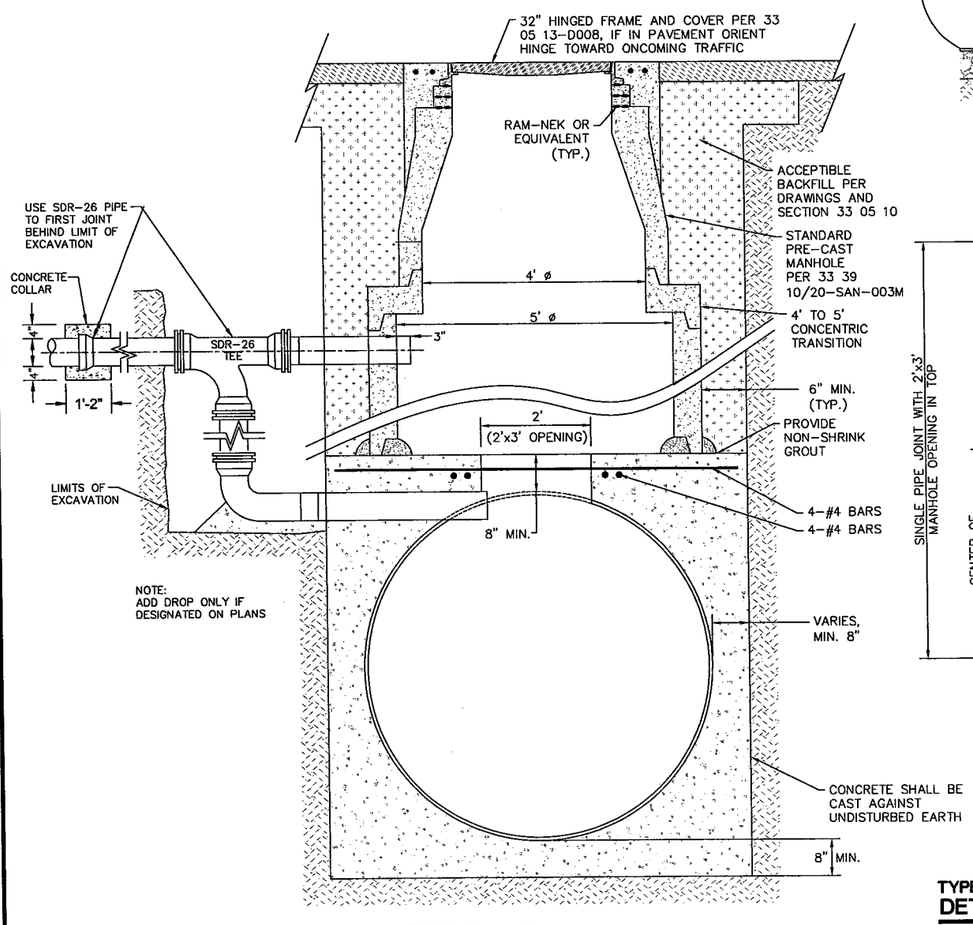

SECTION VIEW

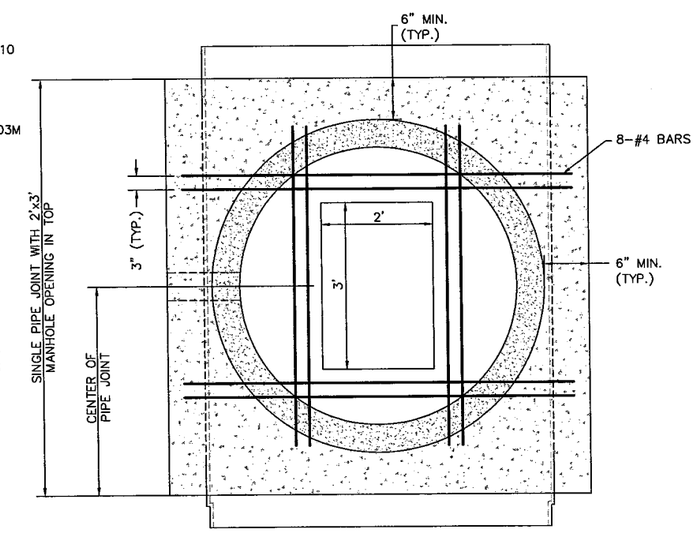

PLAN VIEW

NOTES:
1. MANHOLE TOP SHALL BE PER MANHOLE LID ASSEMBLY DETAILS AS INDICATED ON THE DRAWINGS.
2. THIS STRUCTURE SHALL ONLY BE USED FOR 39" AND LARGER SANITARY SEWER PIPE.
3. CONCRETE SURROUNDING SEWER PIPE SHALL BE AS WIDE AS NECESSARY TO ALLOW FOR 6" MIN. DISTANCE BETWEEN OUTSIDE OF MANHOLE AND AND EDGE OF STRUCTURE.

TYPE "A" MANHOLE
DETAIL 33 39 10/20-D211

SCALE: N.T.S.

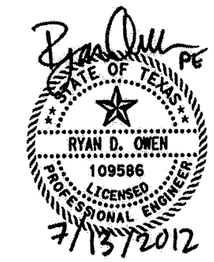

Kimley-Horn and Associates, Inc.
TEXAS REGISTERED ENGINEERING FIRM F-928

Texas Department of Transportation
© 2012

IH 35W FROM NORTH TARRANT PKWY TO IH 820

IH 35W UTILITY RELOCATIONS
WASTEWATER LINE DETAILS

SHEET 37 OF 54

DESIGN KHA	FED. RD. DIV. NO. 6	FEDERAL AID PROJECT NO. (SEE TITLE SHEET)		HIGHWAY NO. IH 35W
GRAPHICS KHA	STATE	DISTRICT	COUNTY	SHEET NO.
CHECK KHA	TEXAS	FTW	TARRANT	1375
CHECK KHA	CONTROL 0014	SECTION 16	JOB 255, ETC.	

FILENAME: S3BPUTIL*DETAILS*WW03.dgn
DRAWING DATE: 7/13/2012

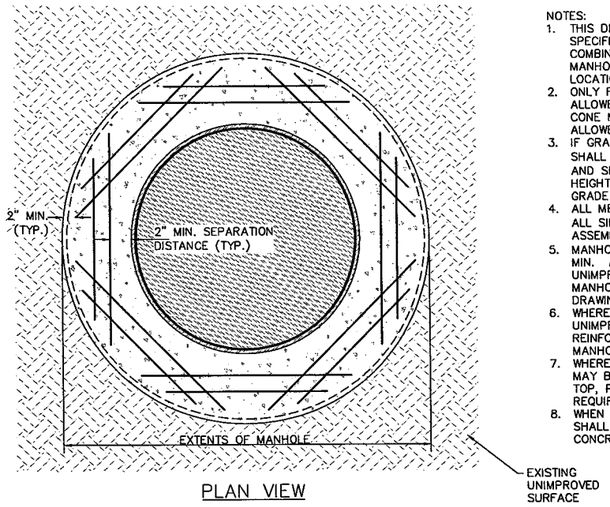

PLAN VIEW

NOTES:
1. THIS DETAIL TO BE USED ONLY WHERE SPECIFIED ON THE DRAWINGS IN COMBINATION WITH PROPOSED MANHOLE OR VAULT IN THE SAME LOCATION.
2. ONLY FLAT TOP MANHOLES SHALL BE ALLOWED FOR UNIMPROVED SURFACES. CONE MANHOLES WILL NOT BE ALLOWED.
3. IF GRADE RINGS ARE USED THEY SHALL BE NO LESS THAN 2" THICK, AND SHALL NOT EXCEED 12" IN TOTAL HEIGHT. NO MORE THAN 3 TOTAL GRADE RINGS. SHALL BE ALLOWED.
4. ALL MEASUREMENTS ARE TYPICAL FOR ALL SIDES OF MANHOLE/VAULT LID ASSEMBLY.
5. MANHOLE FLAT TOP SHALL EXTEND 6" MIN. ABOVE HIGHEST ADJACENT UNIMPROVED SURFACE WHEN RAISED MANHOLE IS INDICATED IN THE DRAWINGS.
6. WHERE FLAT TOP EXTENDS ABOVE UNIMPROVED SURFACE, PROVIDE REINFORCEMENT TYING COLLAR TO MANHOLE.
7. WHERE POSSIBLE, RING AND FRAME MAY BE INTEGRALLY CAST INTO FLAT TOP, PROVIDED ALL OTHER SPACING REQUIREMENTS ARE MET.
8. WHEN USED, CONCRETE COLLARS SHALL BE POURED TO EXTENTS OF CONCRETE FLAT TOP.

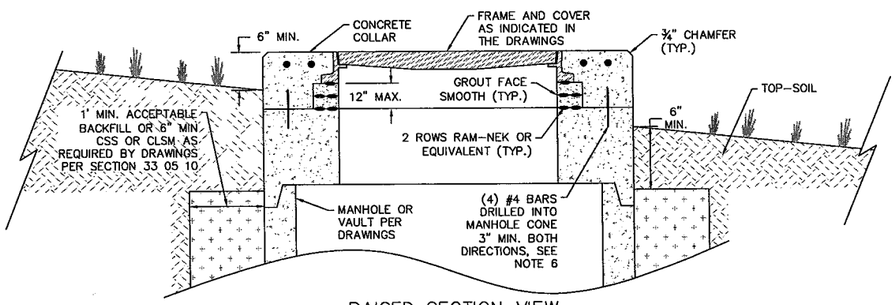

RAISED SECTION VIEW

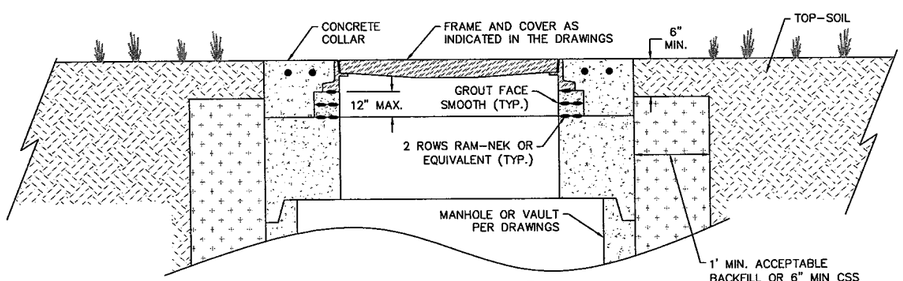

FLUSH SECTION VIEW

MANHOLE LID ASSEMBLY - NATURAL GROUND (FLAT TOP) DETAIL 33 05 13/D015

SCALE: N.T.S.

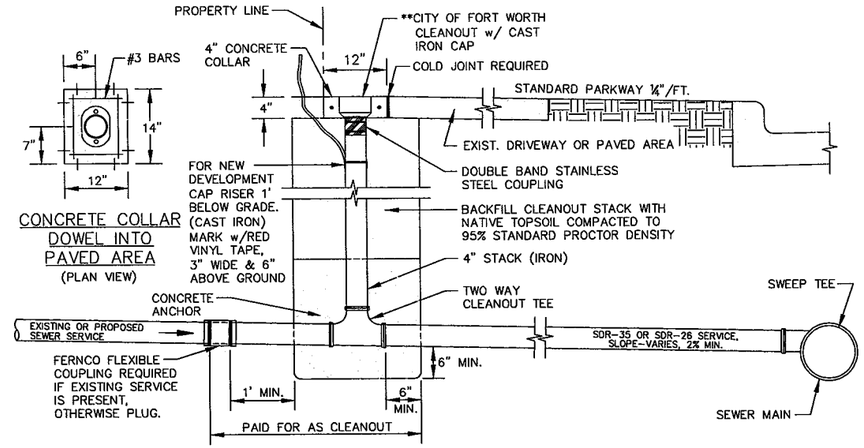

CONCRETE COLLAR DOWEL INTO PAVED AREA (PLAN VIEW)

CLEANOUT NOTES
1. THE SWEEP TEE AND PIPE FITTINGS INSTALLED SHALL BE SDR-35 OR SDR-26 PVC MATERIAL.
2. CONNECTIONS TO THE EXISTING SERVICE SHALL BE MADE USING RUBBER SLEEVE COUPLINGS WITH STAINLESS STEEL DOUBLE BAND REPAIR SLEEVES. THE SLEEVES SHALL BE TIGHTENED TO THE TORQUE RECOMMENDED BY THE MANUFACTURER.
3. SLOPE OF THE SANITARY SEWER SERVICE SHALL BE A MINIMUM OF 2 PERCENT.
4. CONCRETE USED AROUND CLEANOUT ASSEMBLY SHALL BE 5 SACK, 3,000 PSI MIX.

PRODUCT INFORMATION

** From Stanley Roberts & Assoc., Information Subject To Change.

DESCRIPTION	WEIGHT	PART NO.
Cast Iron Lateral Cleanout W/ SS Bolts and Coupling	18 lbs	ATL-424

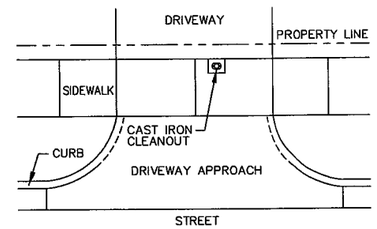

CAST IRON CLEANOUT BOOT FOR PAVED AREAS

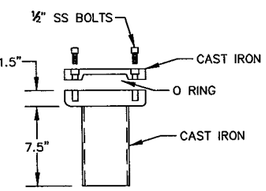

TWO WAY SERVICE CLEANOUT FOR PAVED AREAS SAN-011A

SCALE: N.T.S.

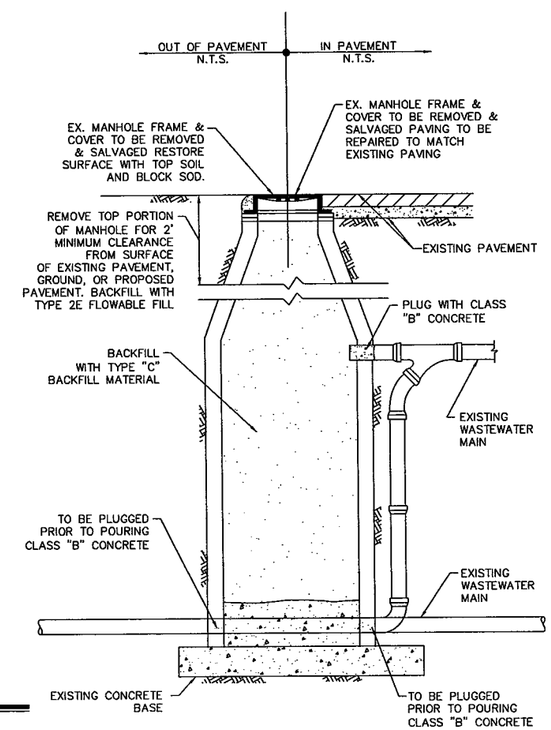

ABANDON EXISTING MANHOLE DETAIL 150

SCALE: N.T.S.

Kimley-Horn and Associates, Inc.
TEXAS REGISTERED ENGINEERING FIRM F-928

Texas Department of Transportation
© 2012

IH 35W FROM NORTH TARRANT PKWY TO IH 820

IH 35W UTILITY RELOCATIONS
WASTEWATER LINE DETAILS

SHEET 38 OF 54

DESIGN	FED. RD. DIV. NO.	FEDERAL AID PROJECT NO.		HIGHWAY NO.
KHA	6	(SEE TITLE SHEET)		IH 35W
GRAPHICS	STATE	DISTRICT	COUNTY	SHEET NO.
KHA	TEXAS	FTW	TARRANT	1376
CHECK	CONTROL	SECTION	JOB	
KHA	0014	16	255, ETC.	
CHECK				
KHA				

FILENAME: S3BPUTIL*DETAILS*WW04.dgn

DRAWING DATE: 7/13/2012

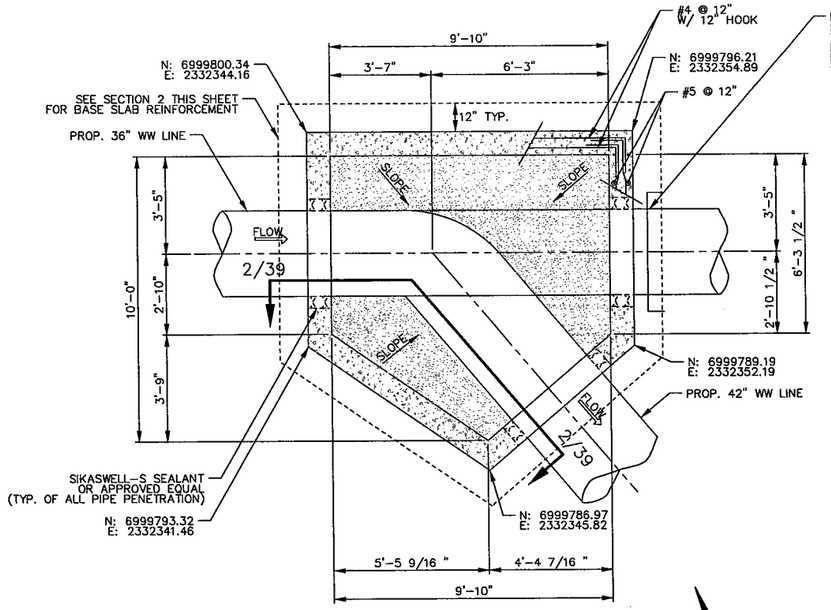

Junction Structure at Sta. 8+71.85
FOUNDATION PLAN
1/39
SCALE: 3/16" = 1'-0"

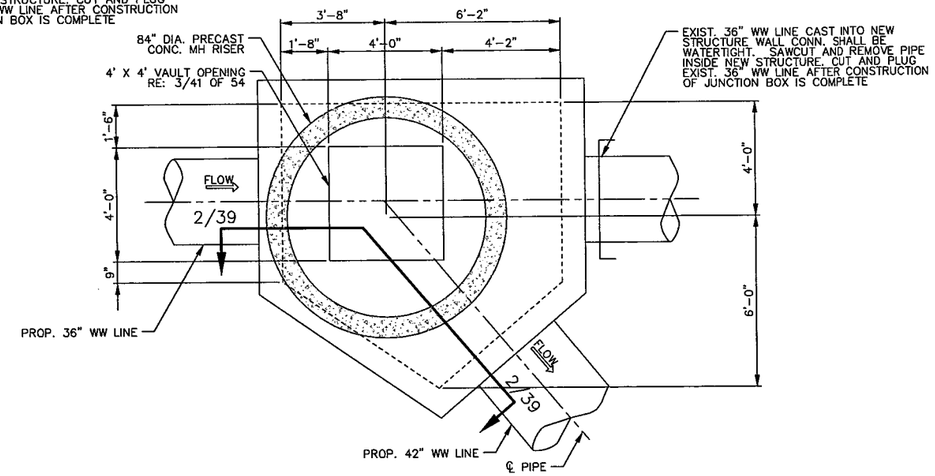

Junction Structure at Sta. 8+71.85
SECTIONAL PLAN
3/39
SCALE: 3/16" = 1'-0"

0" 0.5" 1"
SCALE IN INCHES

GENERAL NOTES:

1. PIPE SHALL BE CAST INTEGRALLY WITH VAULT. BLOCKOUTS WILL NOT BE ALLOWED.
2. CONCRETE POUR FOR PIPE SECTIONS SHALL BE CONCURRENT WITH CONCRETE POUR FOR THE VAULT
3. INTERIOR COATING SHALL BE APPLIED TO ALL SIDES OF INTERIOR MANHOLE VAULT. COATING SHALL BE RAVEN LINING SYSTEM SERIES 405 OR APPROVED EQUAL.

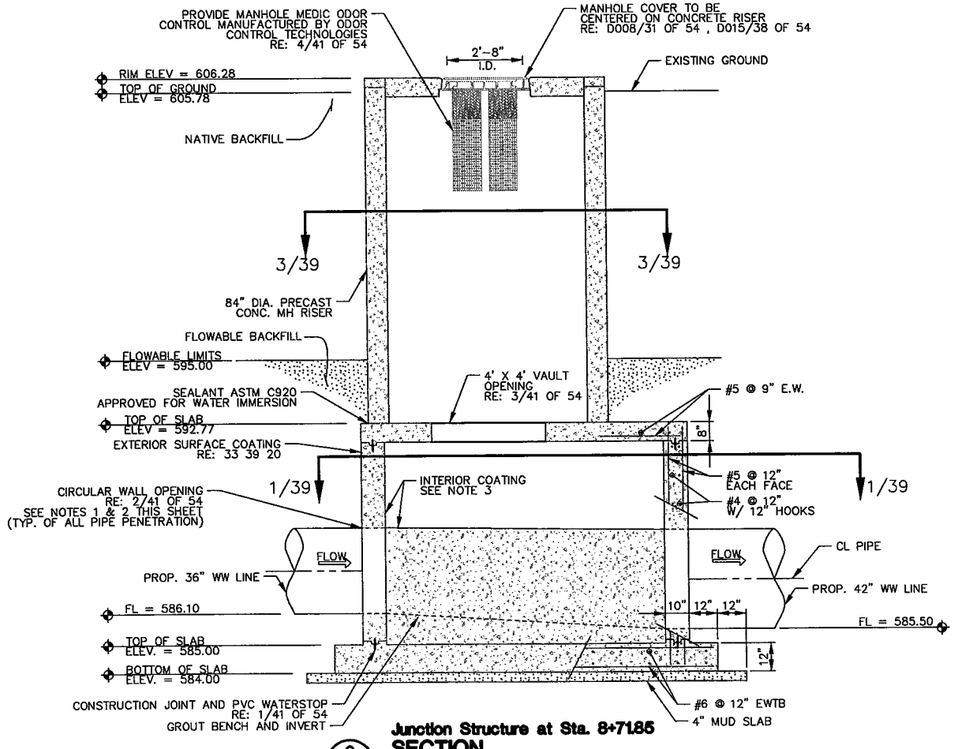

Junction Structure at Sta. 8+71.85
SECTION
2/39
SCALE: 3/16" = 1'-0"

P.E.
STATE OF TEXAS
TODD L. STROUSE
107773
LICENSED
PROFESSIONAL ENGINEER
7/13/2012

Kimley-Horn and Associates, Inc.
TEXAS REGISTERED ENGINEERING FIRM F-928

Texas Department of Transportation
© 2012

IH 35W FROM NORTH TARRANT PKWY TO IH 820

IH 35W UTILITY RELOCATIONS
WASTEWATER LINE DETAILS

SHEET 39 OF 54

DESIGN	FED. RD. DIV. NO.	FEDERAL AID PROJECT NO.		HIGHWAY NO.
KHA	6	(SEE TITLE SHEET)		IH 35W
GRAPHICS	STATE	DISTRICT	COUNTY	SHEET NO.
KHA	TEXAS	FTW	TARRANT	1377
CHECK	CONTROL	SECTION	JOB	
KHA	0014	16	255, ETC.	

FILENAME: S3BPUTIL*DETAILS*WW05.dgn
DRAWING DATE: 7/13/2012

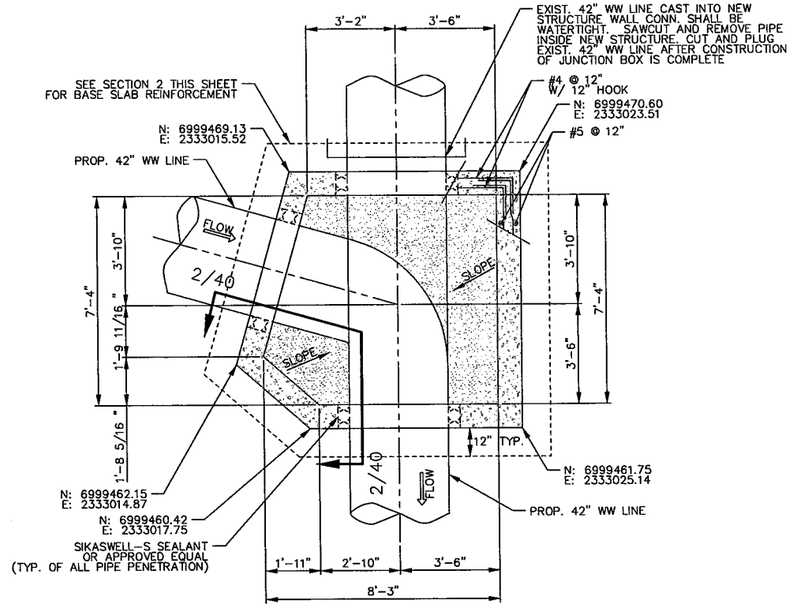

Junction Structure at Sta. 0+00
FOUNDATION PLAN
1/40 SCALE: 3/16" = 1'-0"

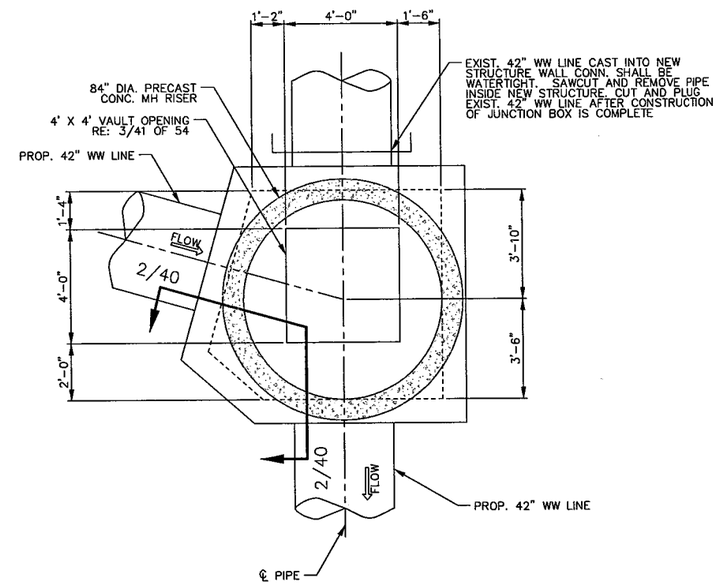

Junction Structure at Sta. 0+00
SECTIONAL PLAN
3/40 SCALE: 3/16" = 1'-0"

0" 0.5" 1"
SCALE IN INCHES

GENERAL NOTES:

1. PIPE SHALL BE CAST INTEGRALLY WITH VAULT. BLOCKOUTS WILL NOT BE ALLOWED.
2. CONCRETE POUR FOR PIPE SECTIONS SHALL BE CONCURRENT WITH CONCRETE POUR FOR THE VAULT
3. INTERIOR COATING SHALL BE APPLIED TO ALL SIDES OF INTERIOR MANHOLE VAULT. COATING SHALL BE RAVEN LINING SYSTEM SERIES 405 OR APPROVED EQUAL.

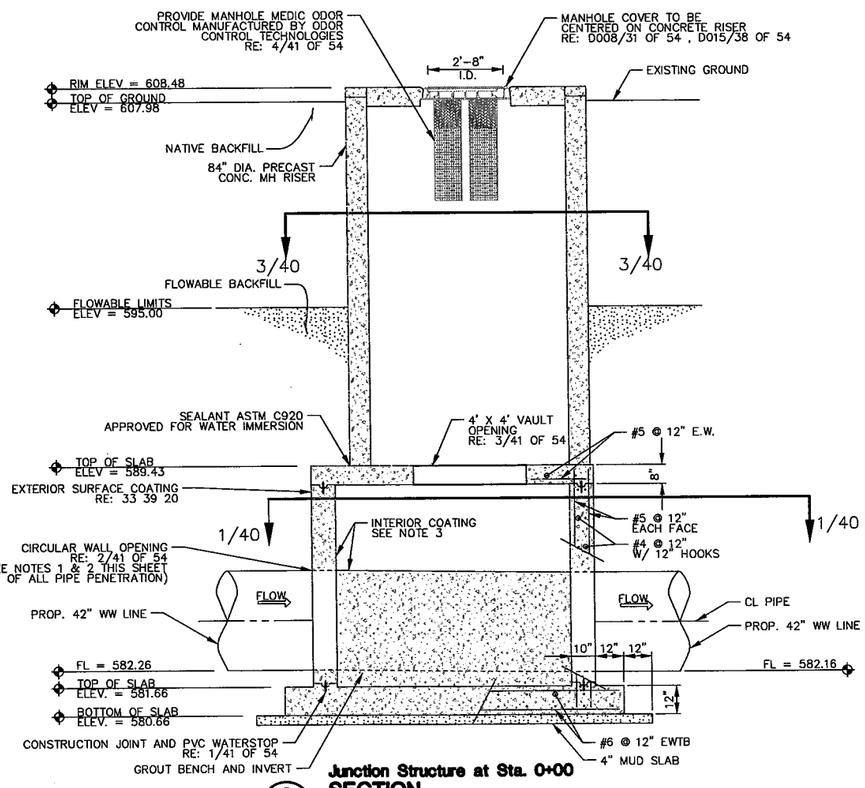

Junction Structure at Sta. 0+00
SECTION
2/40 SCALE: 3/16" = 1'-0"

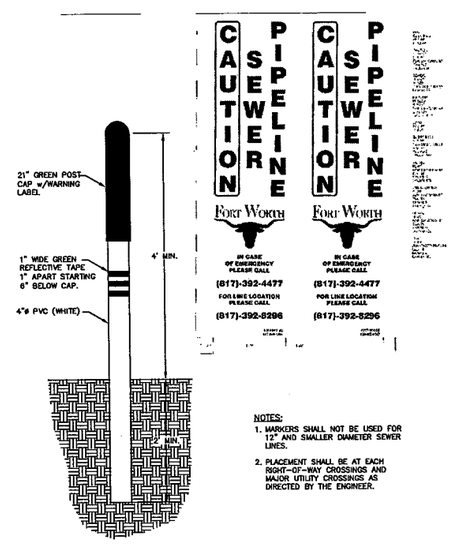

NOTES:

1. MARKERS SHALL NOT BE USED FOR 12" AND SMALLER DIAMETER SEWER LINES.
2. PLACEMENT SHALL BE AT EACH RIGHT-OF-WAY CROSSINGS AND MAJOR UTILITY CROSSINGS AS DIRECTED BY THE ENGINEER.

SANITARY SEWER MARKER POLE
SAN-022
SCALE: NTS

P.E.
STATE OF TEXAS
TODD L. STROUSE
107773
LICENSED
PROFESSIONAL ENGINEER
7/13/2012

Kimley-Horn and Associates, Inc.
TEXAS REGISTERED ENGINEERING FIRM F-928

Texas Department of Transportation
© 2012

IH 35W FROM NORTH TARRANT PKWY TO IH 820

IH 35W UTILITY RELOCATIONS
WASTEWATER LINE DETAILS

SHEET 40 OF 54

DESIGN	FED. RD. DIV. NO.	FEDERAL AID PROJECT NO.		HIGHWAY NO.
KHA	6	(SEE TITLE SHEET)		IH 35W
GRAPHICS KHA	STATE	DISTRICT	COUNTY	SHEET NO.
CHECK KHA	TEXAS	FTW	TARRANT	1378
CHECK KHA	CONTROL	SECTION	JOB	
	0014	16	255, ETC.	

FILENAME: S3BPUTIL*DETAILS*WW06.dgn
DRAWING DATE: 7/13/2012

STRUCTURAL NOTES:

GENERAL:

1. STRUCTURE DESIGNED IN ACCORDANCE WITH THE 2006 EDITION OF THE INTERNATIONAL BUILDING CODE.
2. STRUCTURAL DESIGN SHALL CONFORM WITH ACI 318-05 EXCEPT AS OTHERWISE INDICATED BY ALL APPLICABLE LOCAL BUILDING CODES.
3. BACKFILL OPERATIONS WILL NOT BE ALLOWED UNTIL THE BASE SLAB, FOOTINGS, AND WALLS HAVE REACHED THEIR MINIMUM COMPRESSIVE STRENGTH AT 28 DAYS. CONTRACTOR SHALL BRACE ALL CONCRETE WALLS PRIOR TO PLACING AND COMPACTING BACKFILL.
4. THE GEOTECHNICAL INVESTIGATION AND FOUNDATION DESIGN ARE BASED UPON THE SOILS REPORT DATED JUNE 15, 2012 BY ALLIANCE GEOTECHNICAL GROUP.
5. STRUCTURE SHALL BE IN ACCORDANCE WITH THE LATEST VERSION OF ACI 350.

FOUNDATIONS AND EARTHWORK:

1. ALL FOUNDATIONS, EARTHWORK, EXCAVATION, BACKFILL, AND SUBGRADE DRAINAGE SHALL BE SUBJECT TO OBSERVATION BY GEOTECHNICAL ENGINEER, DESIGNATED BY OWNER, WHOSE APPROVAL IS REQUIRED PRIOR TO PLACEMENT OF CONCRETE FOUNDATIONS. COORDINATE SCHEDULES TO FACILITATE OBSERVATION. RE: SPEC 01 45 23 TESTING AND INSPECTION SERVICES.
2. MATERIALS SHOULD BE FREE OF VEGETATION AND DEBRIS. NATIVE BACKFILL SHALL BE PLACED IN LOOSE LIFTS NOT EXCEEDING 8 INCHES, AND COMPACTED BETWEEN 95 AND 100 PERCENT OF STANDARD PROCTOR (ASTM D-698). EACH LIFT SHALL BE TESTED FOR DENSITY PRIOR TO PLACEMENT OF NEXT LIFT.
3. BACKFILL FROM THE BOTTOM OF THE MUD SLAB TO ELEVATION 595.00 SHALL BE FLOWABLE FILL PER CITY SPEC 03 34 13. NATIVE MATERIAL MAY BE UTILIZED FROM ELEVATION 595.00 TO THE SURFACE.
4. REFERENCE SPEC 03 34 13 FOR MAX LIFT OF ALLOWABLE BACKFILL.

CONCRETE AND RELATED ITEMS:

1. CONCRETE WORK SHALL CONFORM TO ALL REQUIREMENTS OF ACI 301-05, STANDARD SPECIFICATIONS FOR STRUCTURAL CONCRETE, PUBLISHED BY THE AMERICAN CONCRETE INSTITUTE, DETROIT, MICHIGAN, EXCEPT AS MODIFIED BY THE REQUIREMENTS OF THESE CONTRACT DOCUMENTS.
2. ALL CONCRETE SHALL HAVE A MINIMUM COMPRESSIVE STRENGTH OF 4,000 PSI AT 28 DAYS, UNLESS OTHERWISE SPECIFIED.
3. ALL CONCRETE REINFORCING STEEL SHALL BE OF DOMESTIC MANUFACTURE AND SHALL CONFORM TO THE REQUIREMENTS OF ASTM A615, GRADE 60.
4. DETAILING OF CONCRETE REINFORCEMENT AND ACCESSORIES SHALL BE IN ACCORDANCE WITH ACI PUBLICATION 315.
5. PROVIDE 3/4" CHAMFER ON ALL EXPOSED EDGES OF CONCRETE.
6. MINIMUM CONCRETE COVER FOR REINFORCEMENT SHALL CONFORM TO ACI 318-05 PART 7.7.1 "CAST-IN-PLACE CONCRETE"
7. CONTRACTOR SHALL COORDINATE ALL PENETRATIONS, CONDUIT, CHAMFERS, AND EMBEDDED ITEMS PRIOR TO CONCRETE PLACEMENT AND/OR STEEL ERECTION. CONTRACTOR SHALL VERIFY ALL SIZES AND LOCATIONS.
8. DO NOT IMPOSE SERVICE LOADS (i.e. ROOF DEAD AND LIVE LOADS, FLOOR DEAD AND LIVE LOADS, BACKFILL, ETC.) UNTIL THE CONCRETE HAS REACHED ITS SPECIFIED MINIMUM COMPRESSIVE STRENGTH.
9. SUBMIT ORIGINAL SHOP DRAWINGS FOR FABRICATION, BENDING, AND PLACEMENT OF CONCRETE REINFORCEMENT. PROVIDE BAR SCHEDULES, STIRRUP SPACING, DIAGRAMS OF BENT BARS, AND ARRANGEMENT OF CONCRETE REINFORCEMENT. PROVIDE ADDITIONAL REINFORCEMENT FOR OPENINGS IN CONCRETE WALLS AND SLABS PER DETAILS.
10. WELDING OF REINFORCING BARS SHALL NOT BE PERMITTED, UNLESS APPROVED BY ENGINEER.
11. ALL CONCRETE FOR STRUCTURES SHALL BE WATERTIGHT.
12. ALL WATERSTOPS SHALL BE 6" HEAVY DUTY PVC (MINIMUM 3/8" THICKNESS).
13. AN AIR-ENTRAINING ADMIXTURE SHALL BE REQUIRED AND CONFORM TO ASTM C260.
14. A WATER-REDUCING ADMIXTURE SHALL BE REQUIRED AND CONFORM TO ASTM C494, TYPE A.
15. FLY ASH SHALL NOT BE ALLOWED AS A CONCRETE SUBSTITUTE.
16. CONCRETE SHALL HAVE CRUSHED LIMESTONE AGGREGATE. GRAVEL OR OTHER TYPE OF AGGREGATE SHALL NOT BE ALLOWED.
17. PORTLAND CEMENT SHALL BE TYPE I OR III AND CONFORM TO ASTM C150.

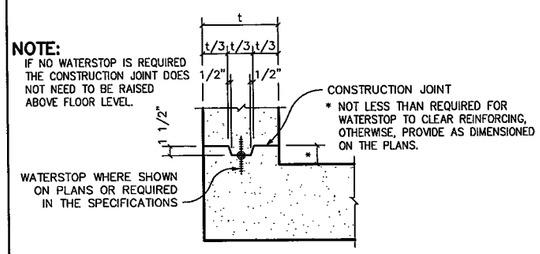

1/41 Construction Joint
DETAIL
NOT TO SCALE

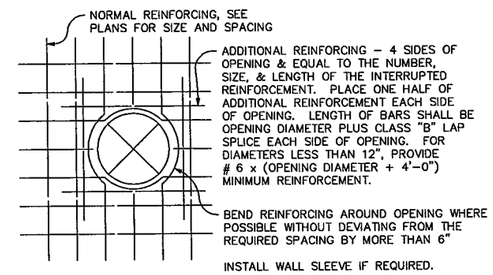

2/41 Circular Wall/Slab Opening
STANDARD DETAIL
NOT TO SCALE

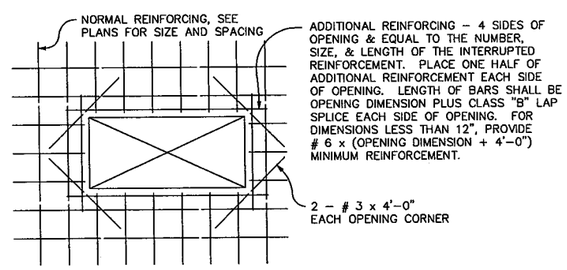

3/41 Rectangular Slab/Wall Opening
STANDARD DETAIL
NOT TO SCALE

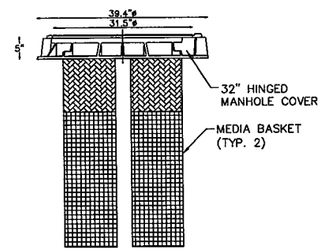

NOTE: 1. ODOR CONTROL DEVICE SHALL BE MANHOLE MEDIC WITH GAS–BUSTER MEDIA MANUFACTURED BY ODOR CONTROL TECHNOLOGIES, INC. OR APPROVED EQUAL.

4/41 Odor Control Device
DETAIL
NOT TO SCALE

Kimley-Horn and Associates, Inc.
TEXAS REGISTERED ENGINEERING FIRM F-928

Texas Department of Transportation
© 2012

IH 35W FROM NORTH TARRANT PKWY TO IH 820

IH 35W UTILITY RELOCATIONS
WASTEWATER LINE DETAILS

SHEET 41 OF 54

DESIGN	FED. RD. DIV. NO.	FEDERAL AID PROJECT NO.		HIGHWAY NO.
KHA	6	(SEE TITLE SHEET)		IH 35W
GRAPHICS KHA	STATE	DISTRICT	COUNTY	SHEET NO.
CHECK KHA	TEXAS	FTW	TARRANT	1379
CHECK KHA	CONTROL	SECTION	JOB	
	0014	16	255, ETC.	

FILENAME: S3BPUTIL*DETAILS*WW07.dgn
DRAWING DATE: 7/13/2012

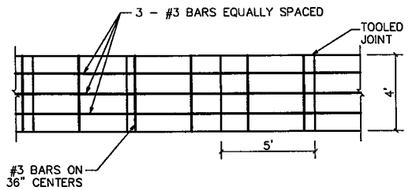

ALL JOINTS SHALL BE CUT 1" DEEP, FOLLOWED BY GROOVING TOOL. 1/2" PREMOLDED EXPANSION JOINT MATERIAL SHALL BE PLACED WHERE NEW WORK ABUTS OLD OR NEW WORK IS ADJACENT TO OTHER CONCRETE WORK, WALL, FOUNDATIONS, CURBS, ETC. MAXIMUM SPACING OF TRANSVERSE EXPANSION JOINTS SHALL BE 40'-0"

NOTES:
1. CONCRETE STRENGTH SHALL BE A MINIMUM OF 3000 P.S.I. AT 28 DAYS.
2. EXPANSION JOINTS SHALL BE 1/2" THICK REDWOOD FOR FULL DEPTH MINUS 1/2" OF SIDEWALK AND SHALL INCLUDE GREASED 24" SMOOTH 1/2" DIA. DOWEL STEEL BARS WITH CAPS.

Sidewalk Joint
DETAIL

SCALE: N.T.S.

DRIVEWAY NOTES:
1. PROVIDE ½" PREMOLDED EXPANSION JOINT & SILICONE JOINT SEALANT, ONLY IF CONNECTING TO EXISTING CONCRETE DRIVE OR SIDEWALK (SUBSIDIARY TO DRIVEWAY). DOWEL INTO EXISTING CONCRETE DRIVEWAY WITH #4x24" BARS @ 18" O.C.
2. DUMMY JOINT IN DRIVEWAY RAMP IS OPTIONAL IN 11'-0" DRIVEWAY ONLY.
3. SIDEWALK SLOPE SHALL BE ¼" PER FOOT TO THE FACE OF CURB, OR AS DIRECTED BY THE ENGINEER.
4. SIDEWALK SECTION THRU DRIVEWAY TO BE POURED SAME THICKNESS AS DRIVEWAY APPROACH, AND PAID FOR AS DRIVEWAY APPROACH. EXISTING SIDEWALK, IF ANY, SHALL BE REMOVED AND REPLACED.

PARKWAY WIDTH	DIM "A"	DIM "B"
10'	1'	9'
11' TO 14'	2' TO 5'	9'
15 TO 19'	3' TO 7'	12'
20' TO 22'	5' TO 7'	15'

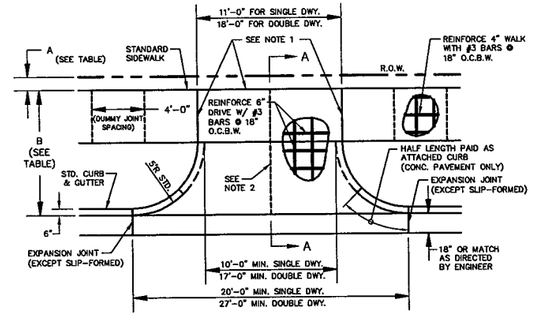

PLAN VIEW

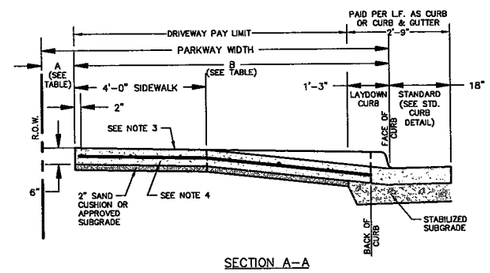

SECTION A-A

DRIVEWAY APPROACH

NOT TO SCALE

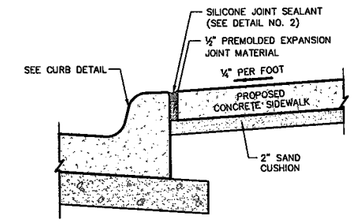

EXPANSION JOINT BETWEEN CURB & SIDEWALK

NOT TO SCALE

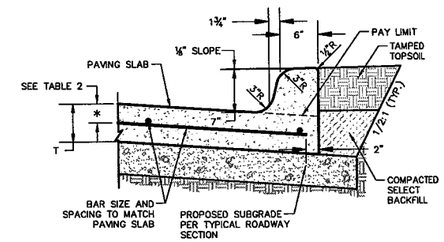

MONOLITHIC CURB

NOT TO SCALE

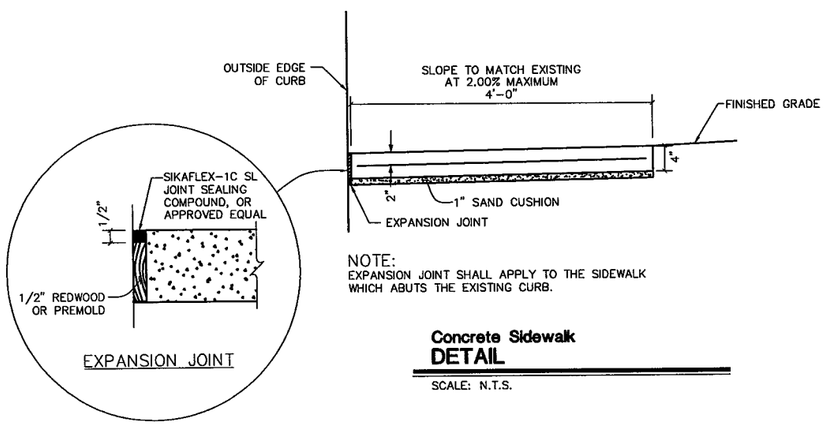

NOTE:
EXPANSION JOINT SHALL APPLY TO THE SIDEWALK WHICH ABUTS THE EXISTING CURB.

Concrete Sidewalk
DETAIL

SCALE: N.T.S.

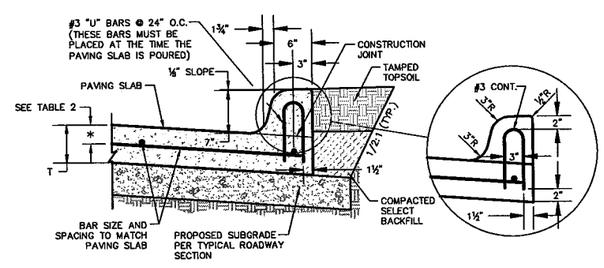

SUPERIMPOSED CURB

NOT TO SCALE

TABLE 1 (SAWED DUMMY JOINT DEPTH)	
DIM T = PAVEMENT THICKNESS	DIM T/4 = JOINT DEPTH
6"	1½"
7"	1¾"
8"	2"

TABLE 2 (PAVEMENT REINFORCING STEEL PLACEMENT)	
T (PAVEMENT THICKNESS)	* (CLEARANCE FROM FACE OF CONCRETE)
6"	2"
7"	2½"
8"	2¾"

NOTE: ALL DOWELS TO BE PLACED AT T/2.

TABLE 3 (MAXIMUM TRANSVERSE CONTRACTION JOINT SPACING)				
PAVEMENT THICKNESS	STREET CLASSIFICATION	DESIGNATION	ROADWAY WIDTH	MAXIMUM SPACING
6"	RESIDENTIAL STREETS	LL	24'	30'
		L	28'	30'
7"	RESIDENTIAL STREETS	LL	24'	30'
		L	28'	35'
		C	36'	35'
		MC	40'	35'
8"	RESIDENTIAL STREETS	LL	24'	30'
		L	28'	35'
		C	36'	40'
		MC	40'	40'
	INDUSTRIAL STREETS	I5U	50'	40'
	MINOR ARTERIALS	M4U	54'	40'

NOTE: TRANSVERSE SAWED DUMMY JOINTS SHALL BE PLACED HALF-WAY BETWEEN TRANSVERSE CONTRACTION JOINTS.

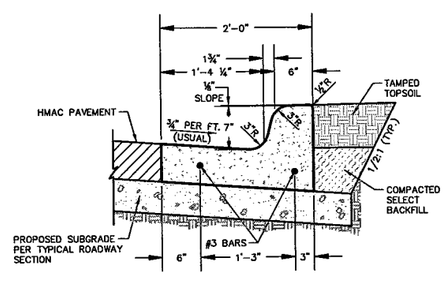

STANDARD 7" CURB AND 18" GUTTER

NOT TO SCALE

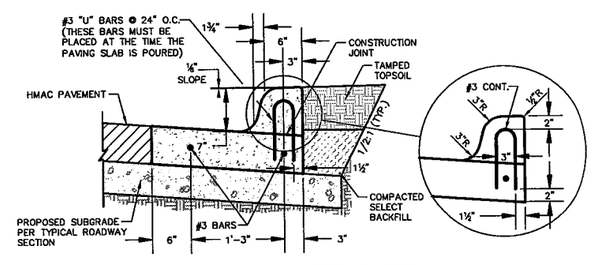

SUPERIMPOSED CURB

NOT TO SCALE

Kimley-Horn and Associates, Inc.
TEXAS REGISTERED ENGINEERING FIRM F-928

Texas Department of Transportation
© 2012

IH 35W FROM NORTH TARRANT PKWY TO IH 820

IH 35W UTILITY RELOCATIONS
PAVEMENT DETAILS

SHEET 42 OF 54

DESIGN	FED. RD. DIV. NO.	FEDERAL AID PROJECT NO.		HIGHWAY NO.
KHA	6	(SEE TITLE SHEET)		IH 35W
GRAPHICS KHA	STATE	DISTRICT	COUNTY	SHEET NO.
CHECK KHA	TEXAS	FTW	TARRANT	1380
CHECK KHA	CONTROL	SECTION	JOB	
	0014	16	255, ETC.	

FILENAME: S3BPUTIL*DETAILS*PVMT01.dgn

DRAWING DATE: 7/13/2012

NOTE:

CONTRACTOR SHALL BE RESPONSIBLE FOR LOCATING ALL UTILITIES, WHETHER PUBLIC OR PRIVATE, PRIOR TO EXCAVATION. THE INFORMATION AND DATA SHOWN WITH RESPECT TO EXISTING UNDERGROUND FACILITIES AT OR CONTIGUOUS TO THE SITE IS APPROXIMATE AND BASED ON INFORMATION FURNISHED BY THE OWNERS OF SUCH UNDERGROUND FACILITIES OR ON PHYSICAL APPURTENANCES OBSERVED IN THE FIELD. THE OWNER AND ENGINEER SHALL NOT BE RESPONSIBLE FOR THE ACCURACY OR COMPLETENESS OF ANY SUCH INFORMATION OR DATA. THE CONTRACTOR SHALL HAVE FULL RESPONSIBILITY FOR REVIEWING AND CHECKING ALL SUCH INFORMATION AND DATA, FOR LOCATING ALL UNDERGROUND FACILITIES, FOR COORDINATION OF THE WORK WITH THE OWNERS OF SUCH UNDERGROUND FACILITIES DURING CONSTRUCTION, AND FOR THE SAFETY AND PROTECTION THEREOF AND REPAIRING ANY DAMAGE THERETO RESULTING FROM THE WORK. THE COST OF ALL WILL HAVE BEEN CONSIDERED AS HAVING BEEN INCLUDED IN THE CONTRACT PRICE. THE CONTRACTOR SHALL NOTIFY ANY AFFECTED UTILITY COMPANIES OR AGENCIES IN WRITING AT LEAST 48 HOURS PRIOR TO CONSTRUCTION.

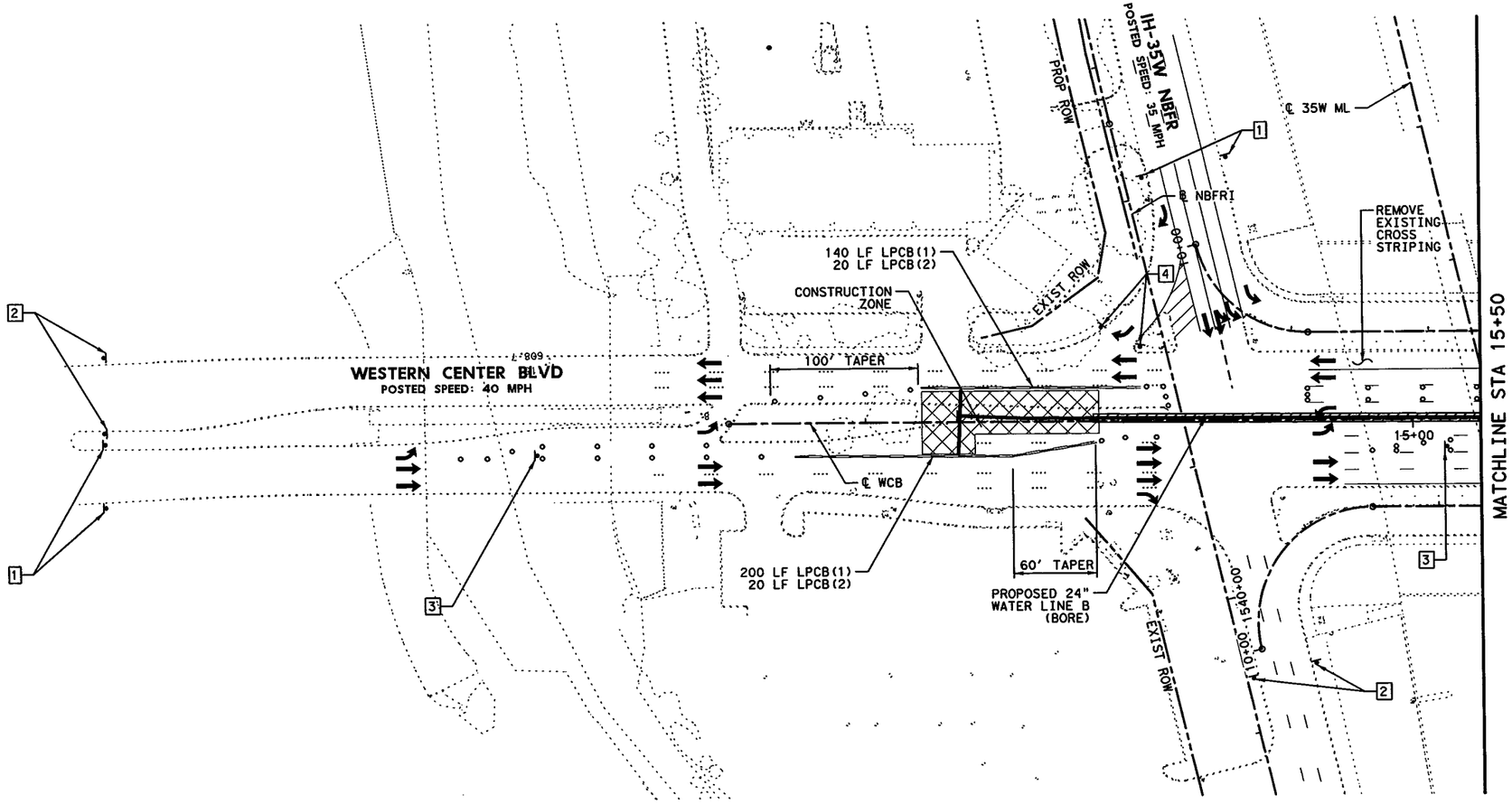

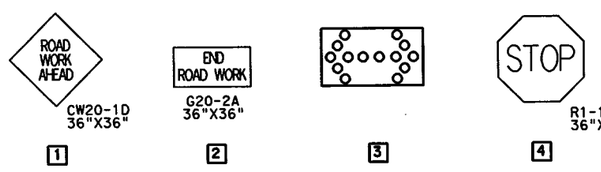

0' 25' 50' 100'

SCALE IN FEET

LEGEND:

- CHANNELIZING DEVICE
- TCP SIGN
- TYPE III BARRICADE
- PROPOSED WORK AREA
- LPCB

TRAFFIC CONTROL NOTES:

1. ALL TRAFFIC CONTROL SIGNS AND DEVICES SHALL BE IN ACCORDANCE WITH THE LATEST EDITION OF THE TEXAS MANUAL ON UNIFORM TRAFFIC CONTROL DEVICES (TEXAS MUTCD).
2. ANY VARIATIONS TO THE TRAFFIC CONTROL PLAN MUST BE APPROVED BY THE ENGINEER.
3. CONTRACTOR SHALL COORDINATE WITH CITY OF FORT WORTH TRAFFIC MANAGEMENT 1 WEEK PRIOR TO START OF CONSTRUCTION.
4. CONTRACTOR SHALL COVER EXISTING YIELD SIGNS FOR THE NORTHBOUND CHANNELIZED RIGHT TURN LANE.
5. ALL LPCB IS CONSIDERED SUBSIDIARY TO SPECIAL SPEC "CITY OF FORT WORTH WATER AND WASTEWATER UTILITIES" TRAFFIC CONTROL ITEM.

STATE OF TEXAS
CHRIS C. ERNST
100220
LICENSED
PROFESSIONAL ENGINEER
7/13/12

Kimley-Horn and Associates, Inc.
TEXAS REGISTERED ENGINEERING FIRM F-928

Texas Department of Transportation
© 2012

IH 35W FROM NORTH TARRANT PKWY TO IH 820

IH 35W UTILITY RELOCATIONS
TRAFFIC CONTROL PLANS
PHASE 1
WCB STA 0+00 TO STA 15+50

SCALE: 1" = 100' SHEET 43 OF 54

DESIGN	FED. RD. DIV. NO.	FEDERAL AID PROJECT NO.		HIGHWAY NO.
KHA	6	(SEE TITLE SHEET)		IH 35W
GRAPHICS KHA	STATE	DISTRICT	COUNTY	SHEET NO.
CHECK KHA	TEXAS	FTW	TARRANT	1381
CHECK KHA	CONTROL	SECTION	JOB	
	0014	16	255, ETC.	

FILENAME: S38PUTIL*TCP*P1*01.dgn

DRAWING DATE: 7/13/2012

NOTE:

CONTRACTOR SHALL BE RESPONSIBLE FOR LOCATING ALL UTILITIES, WHETHER PUBLIC OR PRIVATE, PRIOR TO EXCAVATION. THE INFORMATION AND DATA SHOWN WITH RESPECT TO EXISTING UNDERGROUND FACILITIES AT OR CONTIGUOUS TO THE SITE IS APPROXIMATE AND BASED ON INFORMATION FURNISHED BY THE OWNERS OF SUCH UNDERGROUND FACILITIES OR ON PHYSICAL APPURTENANCES OBSERVED IN THE FIELD. THE OWNER AND ENGINEER SHALL NOT BE RESPONSIBLE FOR THE ACCURACY OR COMPLETENESS OF ANY SUCH INFORMATION OR DATA. THE CONTRACTOR SHALL HAVE FULL RESPONSIBILITY FOR REVIEWING AND CHECKING ALL SUCH INFORMATION AND DATA, FOR LOCATING ALL UNDERGROUND FACILITIES, FOR COORDINATION OF THE WORK WITH THE OWNERS OF SUCH UNDERGROUND FACILITIES DURING CONSTRUCTION, AND FOR THE SAFETY AND PROTECTION THEREOF AND REPAIRING ANY DAMAGE THERETO RESULTING FROM THE WORK. THE COST OF ALL WILL HAVE BEEN CONSIDERED AS HAVING BEEN INCLUDED IN THE CONTRACT PRICE. THE CONTRACTOR SHALL NOTIFY ANY AFFECTED UTILITY COMPANIES OR AGENCIES IN WRITING AT LEAST 48 HOURS PRIOR TO CONSTRUCTION.

0' 25' 50' 100'

SCALE IN FEET

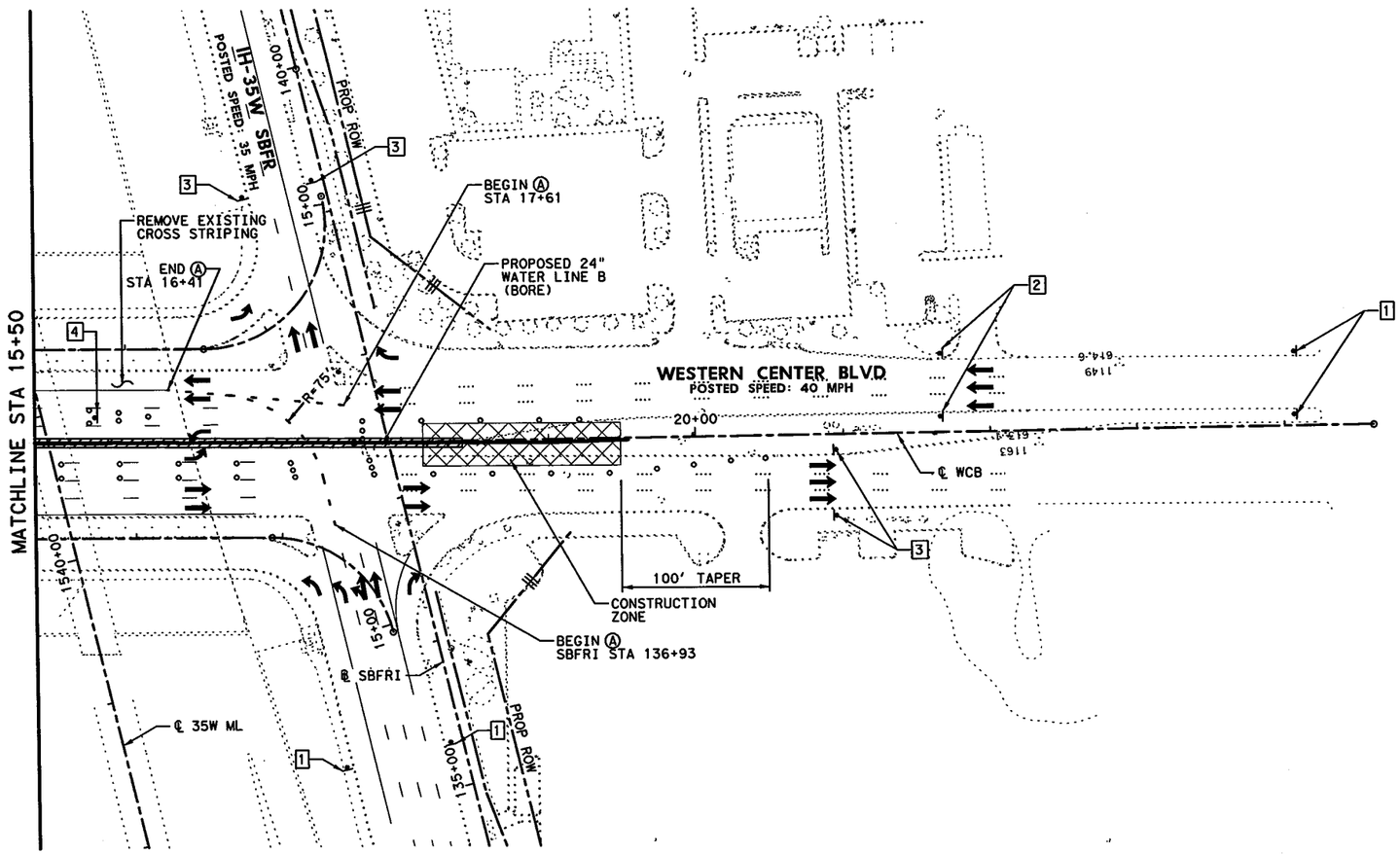

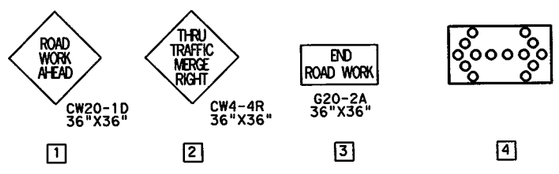

LEGEND:

- ○ CHANNELIZING DEVICE
- TCP SIGN
- TYPE III BARRICADE
- PROPOSED WORK AREA
- Ⓐ WK ZN PAV MRK REMOV (W) 4" (DOT)

TRAFFIC CONTROL NOTES:

1. ALL TRAFFIC CONTROL SIGNS AND DEVICES SHALL BE IN ACCORDANCE WITH THE LATEST EDITION OF THE TEXAS MANUAL ON UNIFORM TRAFFIC CONTROL DEVICES (TEXAS MUTCD).
2. ANY VARIATIONS TO THE TRAFFIC CONTROL PLAN MUST BE APPROVED BY THE ENGINEER.
3. CONTRACTOR SHALL COORDINATE WITH CITY OF FORT WORTH TRAFFIC MANAGEMENT 1 WEEK PRIOR TO START OF CONSTRUCTION.

STATE OF TEXAS
CHRIS C. ERNST
100220
LICENSED
PROFESSIONAL ENGINEER
7/13/12

Kimley-Horn and Associates, Inc.
TEXAS REGISTERED ENGINEERING FIRM F-928

Texas Department of Transportation
© 2012

IH 35W FROM NORTH TARRANT PKWY TO IH 820

IH 35W UTILITY RELOCATIONS
TRAFFIC CONTROL PLANS
PHASE 1
WCB STA 15+50 TO STA 24+60

SCALE: 1" = 100' SHEET 44 OF 54

DESIGN KHA	FED.RD. DIV.NO. 6	FEDERAL AID PROJECT NO. (SEE TITLE SHEET)		HIGHWAY NO. IH 35W
GRAPHICS KHA	STATE	DISTRICT	COUNTY	SHEET NO.
CHECK KHA	TEXAS	FTW	TARRANT	1382
CHECK KHA	CONTROL 0014	SECTION 16	JOB 255, ETC.	

FILENAME: S3BPUTIL*TCP*P1*02.dgn

DRAWING DATE: 7/13/2012

NOTE:

CONTRACTOR SHALL BE RESPONSIBLE FOR LOCATING ALL UTILITIES, WHETHER PUBLIC OR PRIVATE, PRIOR TO EXCAVATION. THE INFORMATION AND DATA SHOWN WITH RESPECT TO EXISTING UNDERGROUND FACILITIES AT OR CONTIGUOUS TO THE SITE IS APPROXIMATE AND BASED ON INFORMATION FURNISHED BY THE OWNERS OF SUCH UNDERGROUND FACILITIES OR ON PHYSICAL APPURTENANCES OBSERVED IN THE FIELD. THE OWNER AND ENGINEER SHALL NOT BE RESPONSIBLE FOR THE ACCURACY OR COMPLETENESS OF ANY SUCH INFORMATION OR DATA. THE CONTRACTOR SHALL HAVE FULL RESPONSIBILITY FOR REVIEWING AND CHECKING ALL SUCH INFORMATION AND DATA, FOR LOCATING ALL UNDERGROUND FACILITIES, FOR COORDINATION OF THE WORK WITH THE OWNERS OF SUCH UNDERGROUND FACILITIES DURING CONSTRUCTION, AND FOR THE SAFETY AND PROTECTION THEREOF AND REPAIRING ANY DAMAGE THERETO RESULTING FROM THE WORK. THE COST OF ALL WILL HAVE BEEN CONSIDERED AS HAVING BEEN INCLUDED IN THE CONTRACT PRICE. THE CONTRACTOR SHALL NOTIFY ANY AFFECTED UTILITY COMPANIES OR AGENCIES IN WRITING AT LEAST 48 HOURS PRIOR TO CONSTRUCTION.

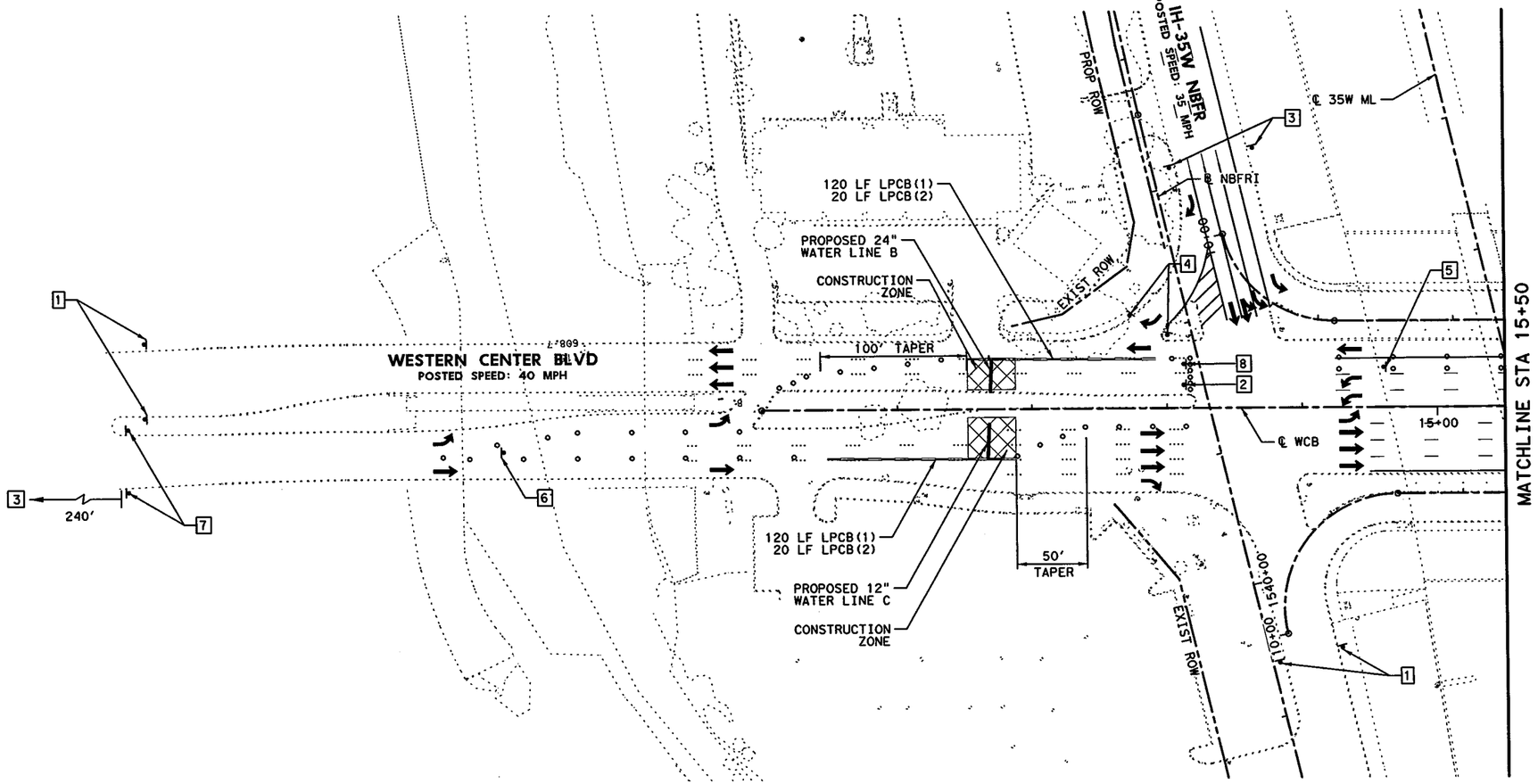

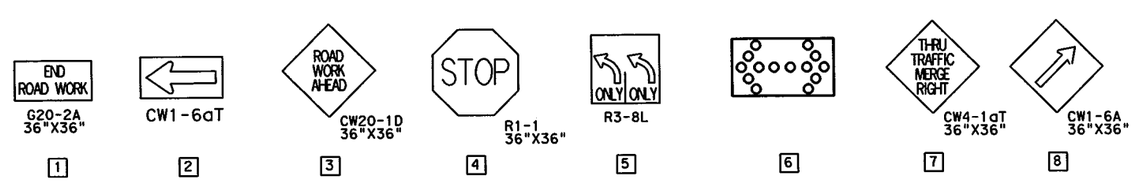

0' 25' 50' 100'

SCALE IN FEET

LEGEND:

- CHANNELIZING DEVICE
- TCP SIGN
- TYPE III BARRICADE
- PROPOSED WORK AREA
- LPCB

TRAFFIC CONTROL NOTES:

1. ALL TRAFFIC CONTROL SIGNS AND DEVICES SHALL BE IN ACCORDANCE WITH THE LATEST EDITION OF THE TEXAS MANUAL ON UNIFORM TRAFFIC CONTROL DEVICES (TEXAS MUTCD).
2. ANY VARIATIONS TO THE TRAFFIC CONTROL PLAN MUST BE APPROVED BY THE ENGINEER.
3. CONTRACTOR SHALL COORDINATE WITH CITY OF FORT WORTH TRAFFIC MANAGEMENT 1 WEEK PRIOR TO START OF CONSTRUCTION.
4. CONTRACTOR SHALL COVER EXISTING YIELD SIGNS FOR THE NORTHBOUND CHANNELIZED RIGHT TURN LANE.
5. ALL LPCB IS CONSIDERED SUBSIDIARY TO SPECIAL SPEC "CITY OF FORT WORTH WATER AND WASTEWATER UTILITIES" TRAFFIC CONTROL ITEM.

STATE OF TEXAS
CHRIS C. ERNST
100220
LICENSED
PROFESSIONAL ENGINEER
7/13/12

Kimley-Horn and Associates, Inc.
TEXAS REGISTERED ENGINEERING FIRM F-928

Texas Department of Transportation
© 2012

IH 35W FROM NORTH TARRANT PKWY TO IH 820

IH 35W UTILITY RELOCATIONS
TRAFFIC CONTROL PLANS
PHASE 2
WCB STA 0+00 TO STA 15+50

SCALE: 1" = 100' SHEET 45 OF 54

DESIGN	FED. RD. DIV. NO.	FEDERAL AID PROJECT NO.		HIGHWAY NO.
KHA	6	(SEE TITLE SHEET)		IH 35W
GRAPHICS KHA	STATE	DISTRICT	COUNTY	SHEET NO.
CHECK KHA	TEXAS	FTW	TARRANT	1383
CHECK KHA	CONTROL	SECTION	JOB	
	0014	16	255, ETC.	

FILENAME: S38PUTIL*TCP*P2*01.dgn

DRAWING DATE: 7/13/2012

NOTE:

CONTRACTOR SHALL BE RESPONSIBLE FOR LOCATING ALL UTILITIES, WHETHER PUBLIC OR PRIVATE, PRIOR TO EXCAVATION. THE INFORMATION AND DATA SHOWN WITH RESPECT TO EXISTING UNDERGROUND FACILITIES AT OR CONTIGUOUS TO THE SITE IS APPROXIMATE AND BASED ON INFORMATION FURNISHED BY THE OWNERS OF SUCH UNDERGROUND FACILITIES OR ON PHYSICAL APPURTENANCES OBSERVED IN THE FIELD. THE OWNER AND ENGINEER SHALL NOT BE RESPONSIBLE FOR THE ACCURACY OR COMPLETENESS OF ANY SUCH INFORMATION OR DATA. THE CONTRACTOR SHALL HAVE FULL RESPONSIBILITY FOR REVIEWING AND CHECKING ALL SUCH INFORMATION AND DATA, FOR LOCATING ALL UNDERGROUND FACILITIES, FOR COORDINATION OF THE WORK WITH THE OWNERS OF SUCH UNDERGROUND FACILITIES DURING CONSTRUCTION, AND FOR THE SAFETY AND PROTECTION THEREOF AND REPAIRING ANY DAMAGE THERETO RESULTING FROM THE WORK. THE COST OF ALL WILL HAVE BEEN CONSIDERED AS HAVING BEEN INCLUDED IN THE CONTRACT PRICE. THE CONTRACTOR SHALL NOTIFY ANY AFFECTED UTILITY COMPANIES OR AGENCIES IN WRITING AT LEAST 48 HOURS PRIOR TO CONSTRUCTION.

0' 25' 50' 100'

SCALE IN FEET

LEGEND:

- CHANNELIZING DEVICE
- TCP SIGN
- TYPE III BARRICADE
- PROPOSED WORK AREA
- Ⓐ WK ZN PAV MRK REMOV (W) 4" (DOT)

TRAFFIC CONTROL NOTES:

1. ALL TRAFFIC CONTROL SIGNS AND DEVICES SHALL BE IN ACCORDANCE WITH THE LATEST EDITION OF THE TEXAS MANUAL ON UNIFORM TRAFFIC CONTROL DEVICES (TEXAS MUTCD).
2. ANY VARIATIONS TO THE TRAFFIC CONTROL PLAN MUST BE APPROVED BY THE ENGINEER.
3. CONTRACTOR SHALL COORDINATE WITH CITY OF FORT WORTH TRAFFIC MANAGEMENT 1 WEEK PRIOR TO START OF CONSTRUCTION.

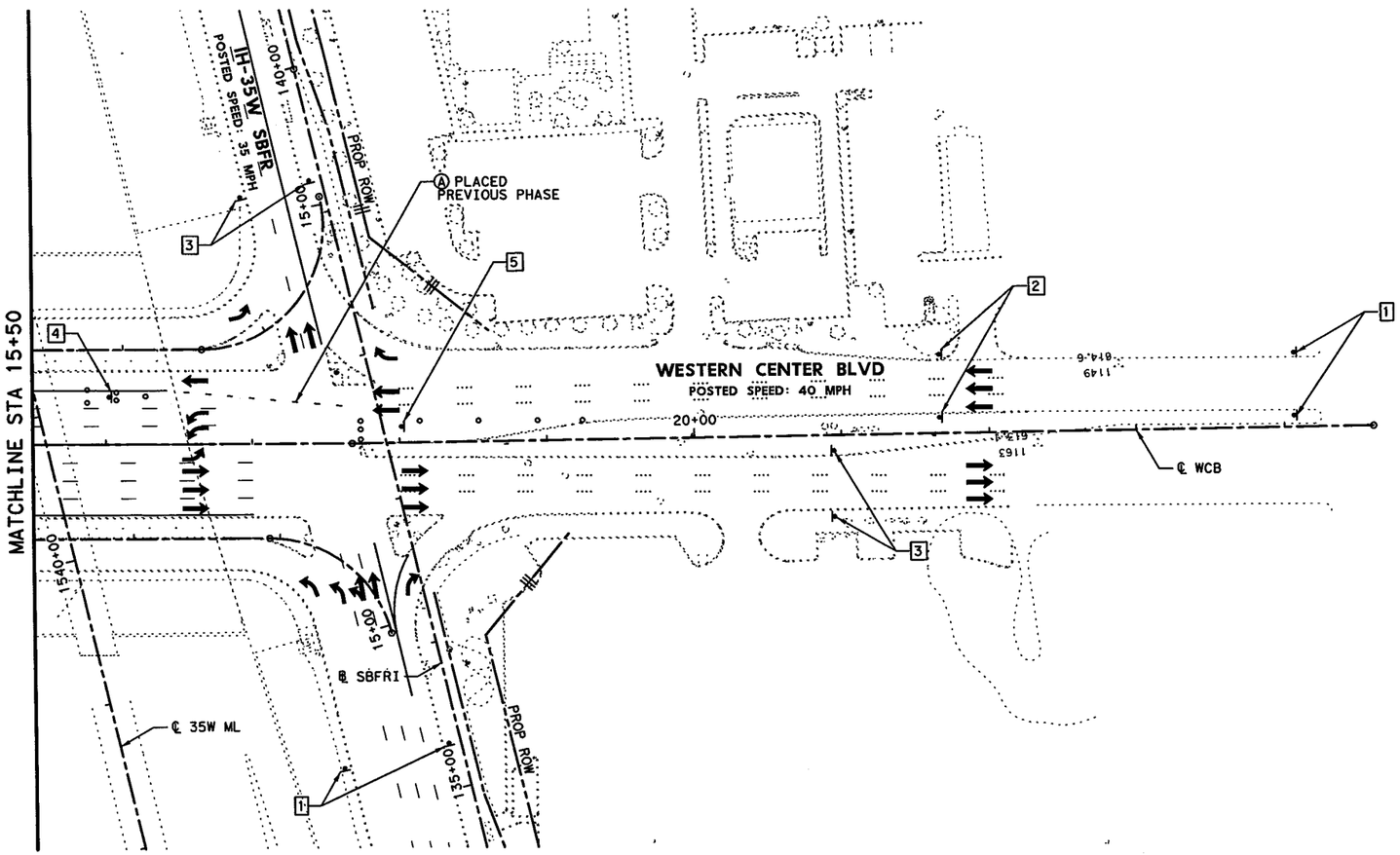

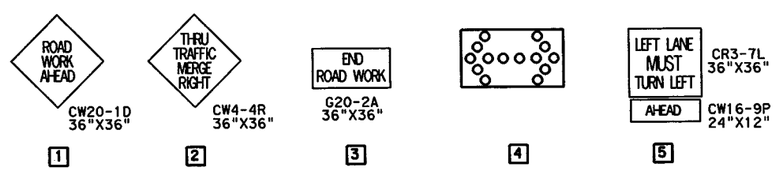

STATE OF TEXAS
CHRIS C. ERNST
100220
LICENSED PROFESSIONAL ENGINEER
7/13/12

Kimley-Horn and Associates, Inc.
TEXAS REGISTERED ENGINEERING FIRM F-928

Texas Department of Transportation
© 2012

IH 35W FROM NORTH TARRANT PKWY TO IH 820

IH 35W UTILITY RELOCATIONS

TRAFFIC CONTROL PLANS

PHASE 2

WCB STA 15+50 TO STA 24+60

SCALE: 1" = 100' SHEET 46 OF 54

DESIGN	FED.RD. DIV.NO.	FEDERAL AID PROJECT NO.		HIGHWAY NO.
KHA	6	(SEE TITLE SHEET)		IH 35W
GRAPHICS	STATE	DISTRICT	COUNTY	SHEET NO.
KHA	TEXAS	FTW	TARRANT	1384
CHECK	CONTROL	SECTION	JOB	
KHA	0014	16	255, ETC.	

DRAWING DATE: 7/13/2012 FILENAME: S38PUTIL*TCP*P2*02.dgn

NOTE:

CONTRACTOR SHALL BE RESPONSIBLE FOR LOCATING ALL UTILITIES, WHETHER PUBLIC OR PRIVATE, PRIOR TO EXCAVATION. THE INFORMATION AND DATA SHOWN WITH RESPECT TO EXISTING UNDERGROUND FACILITIES AT OR CONTIGUOUS TO THE SITE IS APPROXIMATE AND BASED ON INFORMATION FURNISHED BY THE OWNERS OF SUCH UNDERGROUND FACILITIES OR ON PHYSICAL APPURTENANCES OBSERVED IN THE FIELD. THE OWNER AND ENGINEER SHALL NOT BE RESPONSIBLE FOR THE ACCURACY OR COMPLETENESS OF ANY SUCH INFORMATION OR DATA. THE CONTRACTOR SHALL HAVE FULL RESPONSIBILITY FOR REVIEWING AND CHECKING ALL SUCH INFORMATION AND DATA, FOR LOCATING ALL UNDERGROUND FACILITIES, FOR COORDINATION OF THE WORK WITH THE OWNERS OF SUCH UNDERGROUND FACILITIES DURING CONSTRUCTION, AND FOR THE SAFETY AND PROTECTION THEREOF AND REPAIRING ANY DAMAGE THERETO RESULTING FROM THE WORK. THE COST OF ALL WILL HAVE BEEN CONSIDERED AS HAVING BEEN INCLUDED IN THE CONTRACT PRICE. THE CONTRACTOR SHALL NOTIFY ANY AFFECTED UTILITY COMPANIES OR AGENCIES IN WRITING AT LEAST 48 HOURS PRIOR TO CONSTRUCTION.

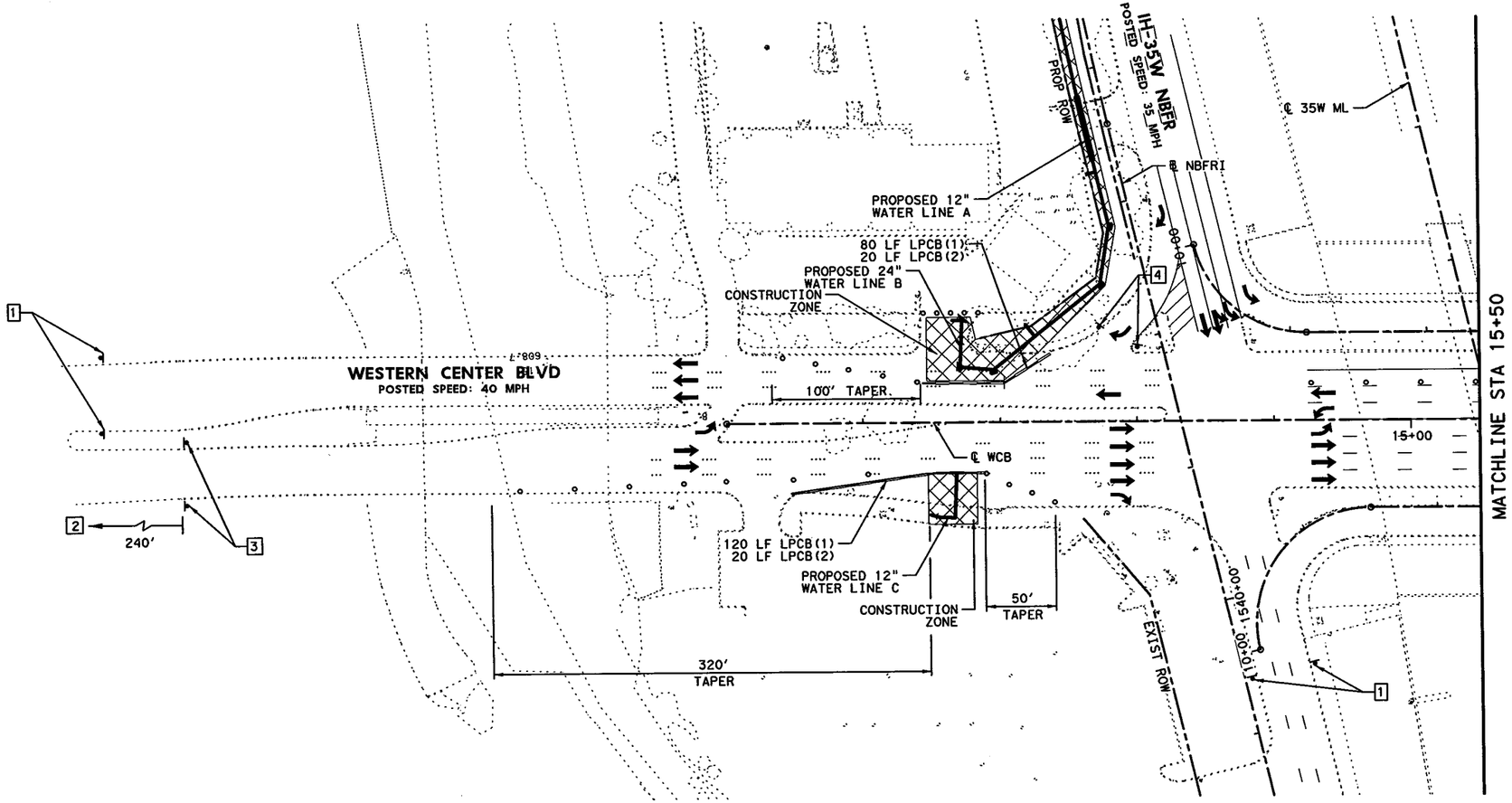

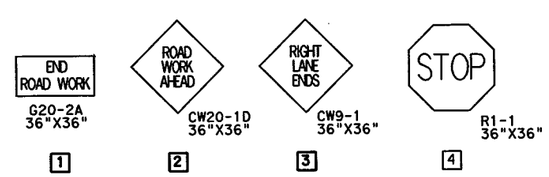

0' 25' 50' 100'

SCALE IN FEET

LEGEND:

- CHANNELIZING DEVICE
- TCP SIGN
- TYPE III BARRICADE
- PROPOSED WORK AREA
- LPCB

TRAFFIC CONTROL NOTES:

1. ALL TRAFFIC CONTROL SIGNS AND DEVICES SHALL BE IN ACCORDANCE WITH THE LATEST EDITION OF THE TEXAS MANUAL ON UNIFORM TRAFFIC CONTROL DEVICES (TEXAS MUTCD).
2. ANY VARIATIONS TO THE TRAFFIC CONTROL PLAN MUST BE APPROVED BY THE ENGINEER.
3. CONTRACTOR SHALL COORDINATE WITH CITY OF FORT WORTH TRAFFIC MANAGEMENT 1 WEEK PRIOR TO START OF CONSTRUCTION.
4. CONTRACTOR SHALL COVER EXISTING YIELD SIGNS FOR THE NORTHBOUND CHANNELIZED RIGHT TURN LANE.
5. ALL LPCB IS CONSIDERED SUBSIDIARY TO SPECIAL SPEC "CITY OF FORT WORTH WATER AND WASTEWATER UTILITIES" TRAFFIC CONTROL ITEM.

STATE OF TEXAS
CHRIS C. ERNST
100220
LICENSED
PROFESSIONAL ENGINEER
7/13/12

Kimley-Horn and Associates, Inc.
TEXAS REGISTERED ENGINEERING FIRM F-928

Texas Department of Transportation
© 2012

IH 35W FROM NORTH TARRANT PKWY TO IH 820

IH 35W UTILITY RELOCATIONS
TRAFFIC CONTROL PLANS
PHASE 3
WCB STA 0+00 TO STA 15+50

SCALE: 1" = 100'

SHEET 47 OF 54

DESIGN	FED. RD. DIV. NO.	FEDERAL AID PROJECT NO.		HIGHWAY NO.
KHA	6	(SEE TITLE SHEET)		IH 35W
GRAPHICS KHA	STATE	DISTRICT	COUNTY	SHEET NO.
CHECK KHA	TEXAS	FTW	TARRANT	1385
CHECK KHA	CONTROL	SECTION	JOB	
	0014	16	255, ETC.	

FILENAME: S3BPUTIL*TCP*P3*01.dgn

DRAWING DATE: 7/13/2012

NOTE:

CONTRACTOR SHALL BE RESPONSIBLE FOR LOCATING ALL UTILITIES, WHETHER PUBLIC OR PRIVATE, PRIOR TO EXCAVATION. THE INFORMATION AND DATA SHOWN WITH RESPECT TO EXISTING UNDERGROUND FACILITIES AT OR CONTIGUOUS TO THE SITE IS APPROXIMATE AND BASED ON INFORMATION FURNISHED BY THE OWNERS OF SUCH UNDERGROUND FACILITIES OR ON PHYSICAL APPURTENANCES OBSERVED IN THE FIELD. THE OWNER AND ENGINEER SHALL NOT BE RESPONSIBLE FOR THE ACCURACY OR COMPLETENESS OF ANY SUCH INFORMATION OR DATA. THE CONTRACTOR SHALL HAVE FULL RESPONSIBILITY FOR REVIEWING AND CHECKING ALL SUCH INFORMATION AND DATA, FOR LOCATING ALL UNDERGROUND FACILITIES, FOR COORDINATION OF THE WORK WITH THE OWNERS OF SUCH UNDERGROUND FACILITIES DURING CONSTRUCTION, AND FOR THE SAFETY AND PROTECTION THEREOF AND REPAIRING ANY DAMAGE THERETO RESULTING FROM THE WORK. THE COST OF ALL WILL HAVE BEEN CONSIDERED AS HAVING BEEN INCLUDED IN THE CONTRACT PRICE. THE CONTRACTOR SHALL NOTIFY ANY AFFECTED UTILITY COMPANIES OR AGENCIES IN WRITING AT LEAST 48 HOURS PRIOR TO CONSTRUCTION.

0' 25' 50' 100'

SCALE IN FEET

LEGEND:

- CHANNELIZING DEVICE
- TCP SIGN
- TYPE III BARRICADE
- PROPOSED WORK AREA

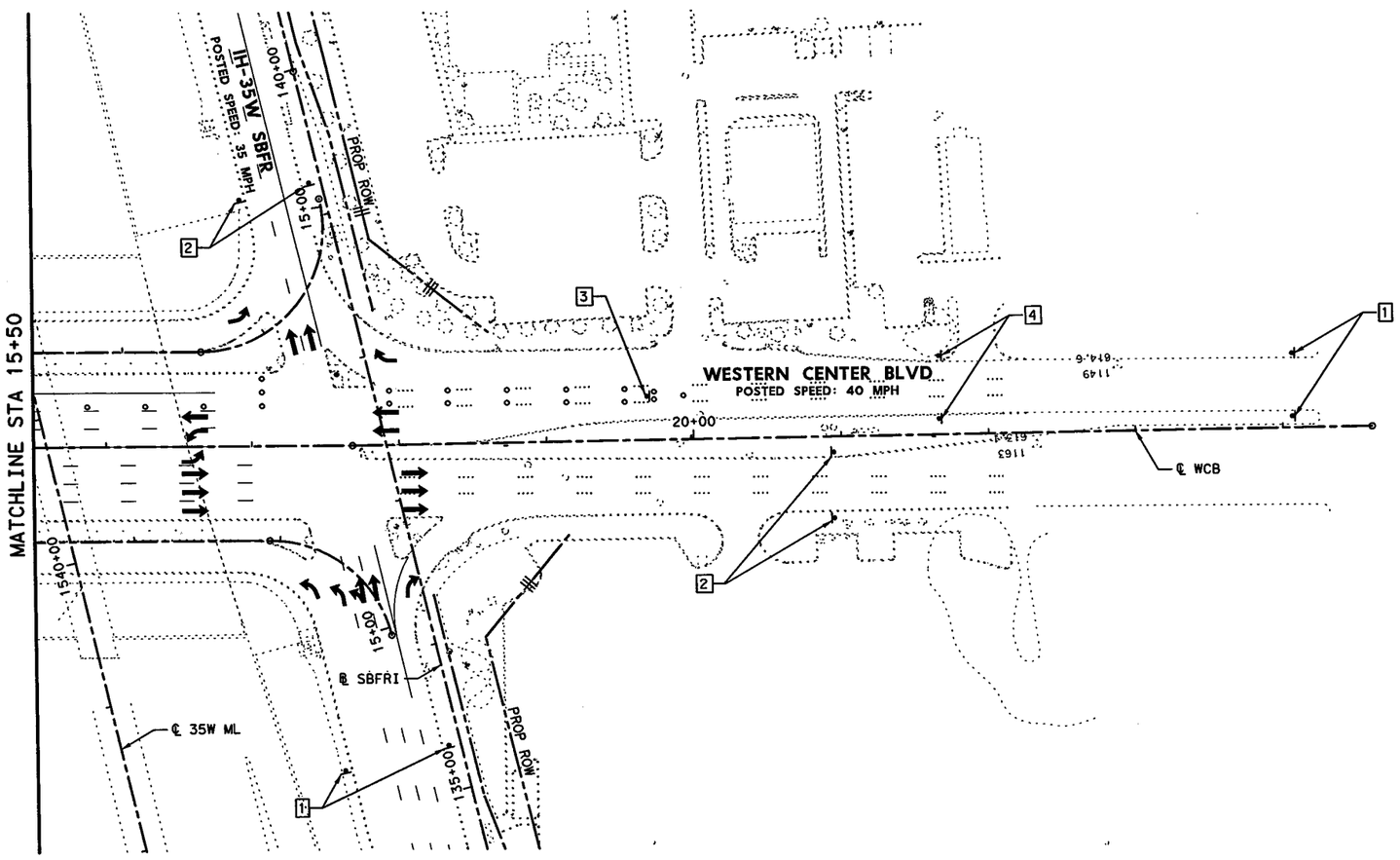

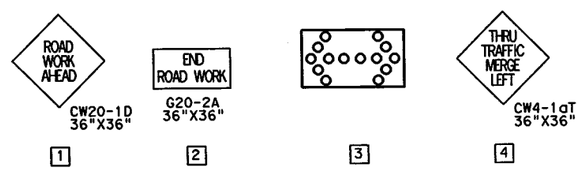

TRAFFIC CONTROL NOTES:

1. ALL TRAFFIC CONTROL SIGNS AND DEVICES SHALL BE IN ACCORDANCE WITH THE LATEST EDITION OF THE TEXAS MANUAL ON UNIFORM TRAFFIC CONTROL DEVICES (TEXAS MUTCD).
2. ANY VARIATIONS TO THE TRAFFIC CONTROL PLAN MUST BE APPROVED BY THE ENGINEER.
3. CONTRACTOR SHALL COORDINATE WITH CITY OF FORT WORTH TRAFFIC MANAGEMENT 1 WEEK PRIOR TO START OF CONSTRUCTION.

STATE OF TEXAS
CHRIS C. ERNST
100220
LICENSED
PROFESSIONAL ENGINEER

7/13/12

Kimley-Horn and Associates, Inc.
TEXAS REGISTERED ENGINEERING FIRM F-928

Texas Department of Transportation
© 2012

IH 35W FROM NORTH TARRANT PKWY TO IH 820

IH 35W UTILITY RELOCATIONS
TRAFFIC CONTROL PLANS
PHASE 3
WCB STA 15+50 TO STA 24+60

SCALE: 1" = 100'

SHEET 48 OF 54

DESIGN	FED.RD. DIV.NO.	FEDERAL AID PROJECT NO.		HIGHWAY NO.
KHA	6	(SEE TITLE SHEET)		IH 35W
GRAPHICS KHA	STATE	DISTRICT	COUNTY	SHEET NO.
CHECK KHA	TEXAS	FTW	TARRANT	1386
CHECK KHA	CONTROL 0014	SECTION 16	JOB 255, ETC.	

FILENAME: S38PUTIL*TCP*P3*02.dgn

DRAWING DATE: 7/13/2012

NOTE:

CONTRACTOR SHALL BE RESPONSIBLE FOR LOCATING ALL UTILITIES, WHETHER PUBLIC OR PRIVATE, PRIOR TO EXCAVATION. THE INFORMATION AND DATA SHOWN WITH RESPECT TO EXISTING UNDERGROUND FACILITIES AT OR CONTIGUOUS TO THE SITE IS APPROXIMATE AND BASED ON INFORMATION FURNISHED BY THE OWNERS OF SUCH UNDERGROUND FACILITIES OR ON PHYSICAL APPURTENANCES OBSERVED IN THE FIELD. THE OWNER AND ENGINEER SHALL NOT BE RESPONSIBLE FOR THE ACCURACY OR COMPLETENESS OF ANY SUCH INFORMATION OR DATA. THE CONTRACTOR SHALL HAVE FULL RESPONSIBILITY FOR REVIEWING AND CHECKING ALL SUCH INFORMATION AND DATA, FOR LOCATING ALL UNDERGROUND FACILITIES, FOR COORDINATION OF THE WORK WITH THE OWNERS OF SUCH UNDERGROUND FACILITIES DURING CONSTRUCTION, AND FOR THE SAFETY AND PROTECTION THEREOF AND REPAIRING ANY DAMAGE THERETO RESULTING FROM THE WORK. THE COST OF ALL WILL HAVE BEEN CONSIDERED AS HAVING BEEN INCLUDED IN THE CONTRACT PRICE. THE CONTRACTOR SHALL NOTIFY ANY AFFECTED UTILITY COMPANIES OR AGENCIES IN WRITING AT LEAST 48 HOURS PRIOR TO CONSTRUCTION.

0' 25' 50' 100'

SCALE IN FEET

LEGEND:

- CHANNELIZING DEVICE
- TCP SIGN
- TYPE III BARRICADE
- PROPOSED WORK AREA

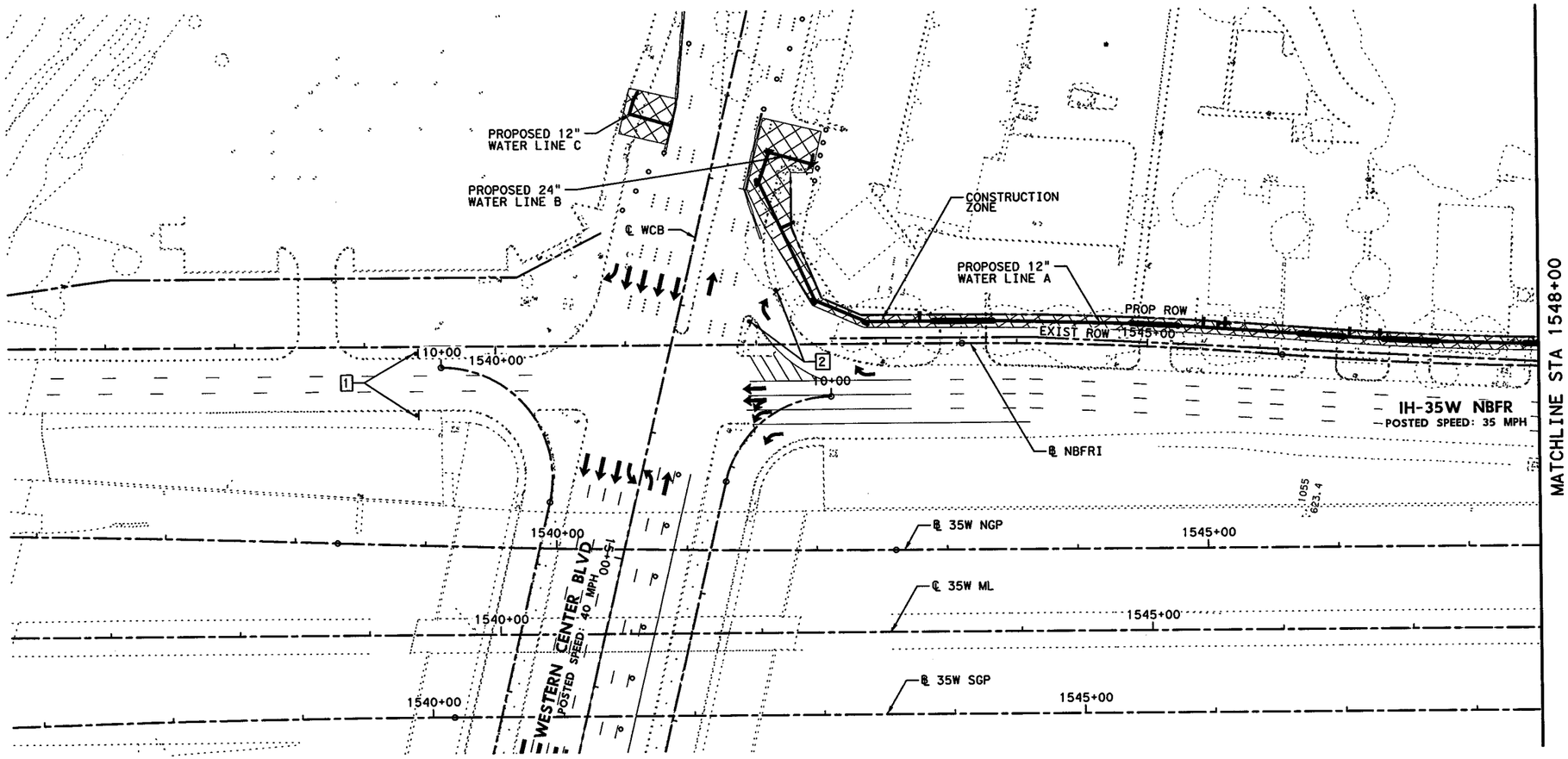

G20-2A
36"X36"
1

R1-1
36"X36"
2

TRAFFIC CONTROL NOTES:

1. ALL TRAFFIC CONTROL SIGNS AND DEVICES SHALL BE IN ACCORDANCE WITH THE LATEST EDITION OF THE TEXAS MANUAL ON UNIFORM TRAFFIC CONTROL DEVICES (TEXAS MUTCD).
2. ANY VARIATIONS TO THE TRAFFIC CONTROL PLAN MUST BE APPROVED BY THE ENGINEER.
3. CONTRACTOR SHALL COORDINATE WITH CITY OF FORT WORTH TRAFFIC MANAGEMENT 1 WEEK PRIOR TO START OF CONSTRUCTION.
4. CONTRACTOR SHALL COVER EXISTING YIELD SIGNS FOR THE NORTHBOUND CHANNELIZED RIGHT TURN LANE.
5. CONTRACTOR SHALL MAINTAIN ACCESS TO ALL BUSINESSES ALONG THE IH-35W NBFR AT ALL TIMES.

STATE OF TEXAS
CHRIS C. ERNST
100220
LICENSED PROFESSIONAL ENGINEER
7/13/12

Kimley-Horn and Associates, Inc.
TEXAS REGISTERED ENGINEERING FIRM F-928

Texas Department of Transportation
© 2012

IH 35W FROM NORTH TARRANT PKWY TO IH 820

IH 35W UTILITY RELOCATIONS

TRAFFIC CONTROL PLANS

PHASE 3

NBFR STA 1536+00 TO STA 1548+00

SCALE: 1" = 100'

SHEET 49 OF 54

DESIGN	FED. RD. DIV. NO.	FEDERAL AID PROJECT NO.		HIGHWAY NO.
KHA	6	(SEE TITLE SHEET)		IH 35W
GRAPHICS	STATE	DISTRICT	COUNTY	SHEET NO.
KHA	TEXAS	FTW	TARRANT	1387
CHECK	CONTROL	SECTION	JOB	
KHA	0014	16	255, ETC.	

FILENAME: S3BPUTIL*TCP*P3*03.dgn

DRAWING DATE: 7/13/2012

NOTE:

CONTRACTOR SHALL BE RESPONSIBLE FOR LOCATING ALL UTILITIES, WHETHER PUBLIC OR PRIVATE, PRIOR TO EXCAVATION. THE INFORMATION AND DATA SHOWN WITH RESPECT TO EXISTING UNDERGROUND FACILITIES AT OR CONTIGUOUS TO THE SITE IS APPROXIMATE AND BASED ON INFORMATION FURNISHED BY THE OWNERS OF SUCH UNDERGROUND FACILITIES OR ON PHYSICAL APPURTENANCES OBSERVED IN THE FIELD. THE OWNER AND ENGINEER SHALL NOT BE RESPONSIBLE FOR THE ACCURACY OR COMPLETENESS OF ANY SUCH INFORMATION OR DATA. THE CONTRACTOR SHALL HAVE FULL RESPONSIBILITY FOR REVIEWING AND CHECKING ALL SUCH INFORMATION AND DATA, FOR LOCATING ALL UNDERGROUND FACILITIES, FOR COORDINATION OF THE WORK WITH THE OWNERS OF SUCH UNDERGROUND FACILITIES DURING CONSTRUCTION, AND FOR THE SAFETY AND PROTECTION THEREOF AND REPAIRING ANY DAMAGE THERETO RESULTING FROM THE WORK. THE COST OF ALL WILL HAVE BEEN CONSIDERED AS HAVING BEEN INCLUDED IN THE CONTRACT PRICE. THE CONTRACTOR SHALL NOTIFY ANY AFFECTED UTILITY COMPANIES OR AGENCIES IN WRITING AT LEAST 48 HOURS PRIOR TO CONSTRUCTION.

0' 25' 50' 100'

SCALE IN FEET

LEGEND:

- CHANNELIZING DEVICE
- TCP SIGN
- TYPE III BARRICADE
- PROPOSED WORK AREA

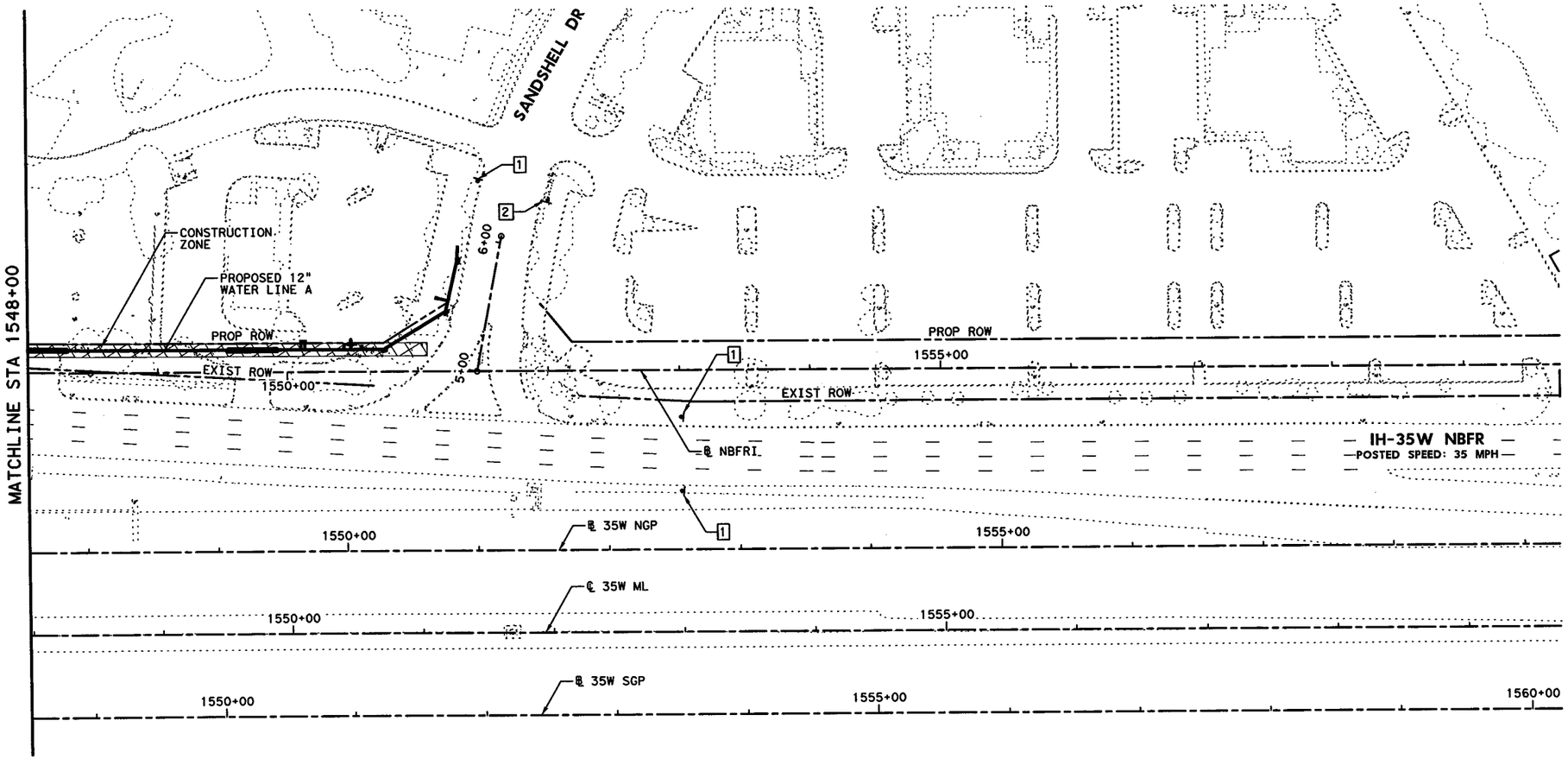

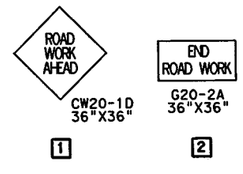

TRAFFIC CONTROL NOTES:

1. ALL TRAFFIC CONTROL SIGNS AND DEVICES SHALL BE IN ACCORDANCE WITH THE LATEST EDITION OF THE TEXAS MANUAL ON UNIFORM TRAFFIC CONTROL DEVICES (TEXAS MUTCD).
2. ANY VARIATIONS TO THE TRAFFIC CONTROL PLAN MUST BE APPROVED BY THE ENGINEER.
3. CONTRACTOR SHALL COORDINATE WITH CITY OF FORT WORTH TRAFFIC MANAGEMENT 1 WEEK PRIOR TO START OF CONSTRUCTION.
4. CONTRACTOR SHALL MAINTAIN ACCESS TO ALL BUSINESSES ALONG THE IH-35W NBFR AT ALL TIMES.

STATE OF TEXAS
CHRIS C. ERNST
100220
LICENSED
PROFESSIONAL ENGINEER
7/13/12

Kimley-Horn and Associates, Inc.
TEXAS REGISTERED ENGINEERING FIRM F-928

Texas Department of Transportation
© 2012

IH 35W FROM NORTH TARRANT PKWY TO IH 820

IH 35W UTILITY RELOCATIONS

TRAFFIC CONTROL PLANS

PHASE 3

NBFR STA 1548+00 TO STA 1560+00

SCALE: 1" = 100' SHEET 50 OF 54

DESIGN	FED.RD. DIV.NO.	FEDERAL AID PROJECT NO.		HIGHWAY NO.
KHA	6	(SEE TITLE SHEET)		IH 35W
GRAPHICS KHA	STATE	DISTRICT	COUNTY	SHEET NO.
CHECK KHA	TEXAS	FTW	TARRANT	1388
CHECK KHA	CONTROL 0014	SECTION 16	JOB 255, ETC.	

FILENAME: S3BPUTIL*TCP*P3*04.dgn

DRAWING DATE: 7/13/2012

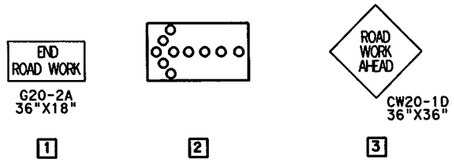

NOTE:

CONTRACTOR SHALL BE RESPONSIBLE FOR LOCATING ALL UTILITIES, WHETHER PUBLIC OR PRIVATE, PRIOR TO EXCAVATION. THE INFORMATION AND DATA SHOWN WITH RESPECT TO EXISTING UNDERGROUND FACILITIES AT OR CONTIGUOUS TO THE SITE IS APPROXIMATE AND BASED ON INFORMATION FURNISHED BY THE OWNERS OF SUCH UNDERGROUND FACILITIES OR ON PHYSICAL APPURTENANCES OBSERVED IN THE FIELD. THE OWNER AND ENGINEER SHALL NOT BE RESPONSIBLE FOR THE ACCURACY OR COMPLETENESS OF ANY SUCH INFORMATION OR DATA. THE CONTRACTOR SHALL HAVE FULL RESPONSIBILITY FOR REVIEWING AND CHECKING ALL SUCH INFORMATION AND DATA, FOR LOCATING ALL UNDERGROUND FACILITIES, FOR COORDINATION OF THE WORK WITH THE OWNERS OF SUCH UNDERGROUND FACILITIES DURING CONSTRUCTION, AND FOR THE SAFETY AND PROTECTION THEREOF AND REPAIRING ANY DAMAGE THERETO RESULTING FROM THE WORK. THE COST OF ALL WILL HAVE BEEN CONSIDERED AS HAVING BEEN INCLUDED IN THE CONTRACT PRICE. THE CONTRACTOR SHALL NOTIFY ANY AFFECTED UTILITY COMPANIES OR AGENCIES IN WRITING AT LEAST 48 HOURS PRIOR TO CONSTRUCTION.

0' 25' 50' 100'

SCALE IN FEET

LEGEND:

- CHANNELIZING DEVICE
- TCP SIGN
- TYPE III BARRICADE
- PROPOSED WORK AREA

TRAFFIC CONTROL NOTES:

1. ALL TRAFFIC CONTROL SIGNS AND DEVICES SHALL BE IN ACCORDANCE WITH THE LATEST EDITION OF THE TEXAS MANUAL ON UNIFORM TRAFFIC CONTROL DEVICES (TMUTCD)
2. ANY VARIATIONS TO THE TRAFFIC CONTROL PLAN MUST BE APPROVED BY THE ENGINEER.
3. CONTRACTOR SHALL COORDINATE WITH CITY OF FORT WORTH TRAFFIC MANAGEMENT 1 WEEK PRIOR TO START OF CONSTRUCTION
4. CONTRACTOR SHALL MAINTAIN ACCESS TO ALL BUSINESSES AND FAIR DRIVE ALONG THE IH-35W SBFR AT ALL TIMES.

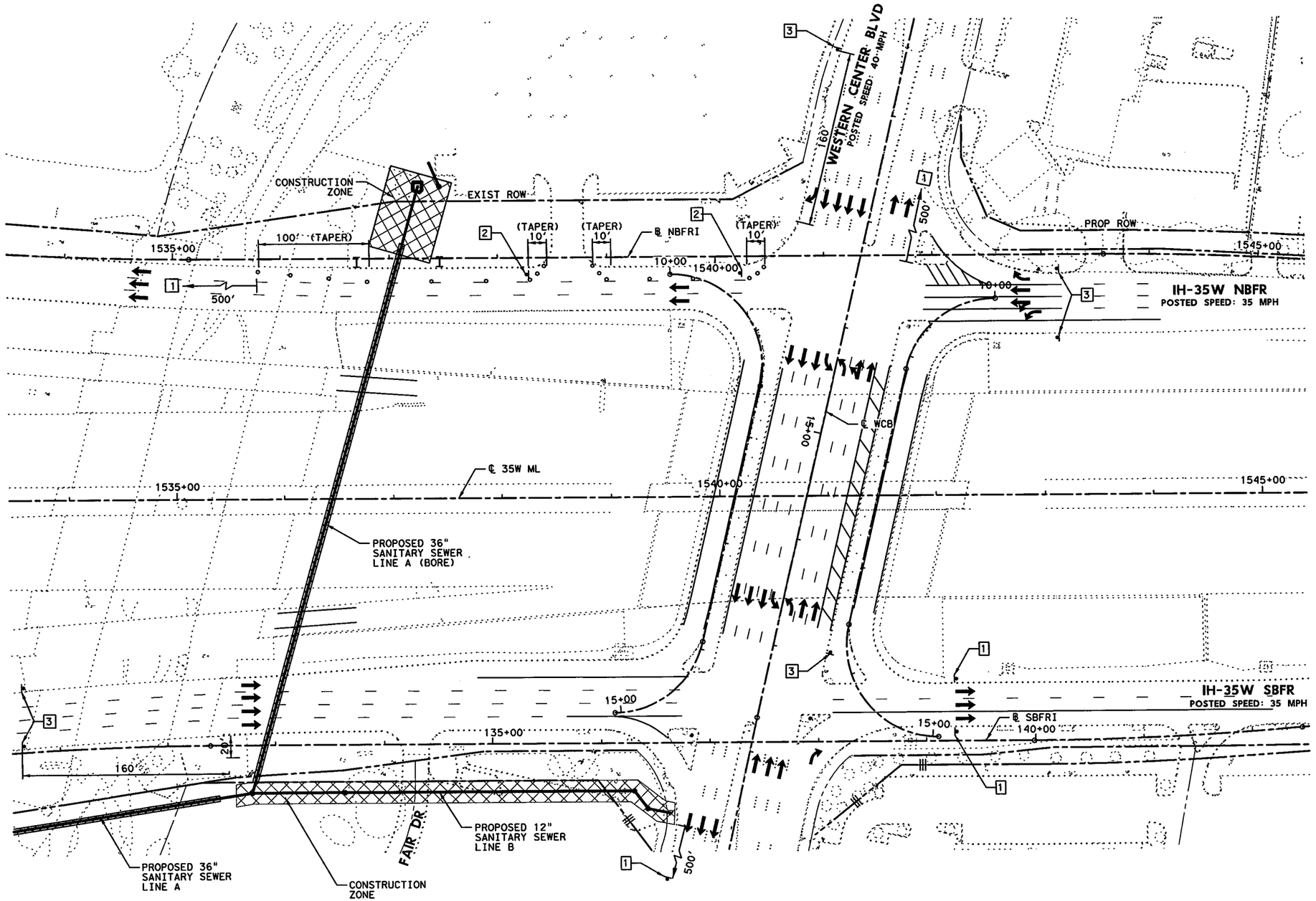

STATE OF TEXAS
CHRIS C. ERNST
100220
LICENSED PROFESSIONAL ENGINEER
7/13/12

Kimley-Horn and Associates, Inc.
TEXAS REGISTERED ENGINEERING FIRM F-928

Texas Department of Transportation
© 2012

IH 35W FROM NORTH TARRANT PKWY TO IH 820

IH 35W UTILITY RELOCATIONS
TRAFFIC CONTROL PLANS
SANITARY SEWER PHASE 1

SCALE: 1" = 100' SHEET 51 OF 54

DESIGN	FED. RD. DIV. NO.	FEDERAL AID PROJECT NO.		HIGHWAY NO.
KHA	6	(SEE TITLE SHEET)		IH 35W
GRAPHICS	STATE	DISTRICT	COUNTY	SHEET NO.
KHA	TEXAS	FTW	TARRANT	1389
CHECK	CONTROL	SECTION	JOB	
KHA	0014	16	255, ETC.	

FILENAME: S3BPUTIL*TCP*P1*01*WW.dgn

DRAWING DATE: 7/13/2012

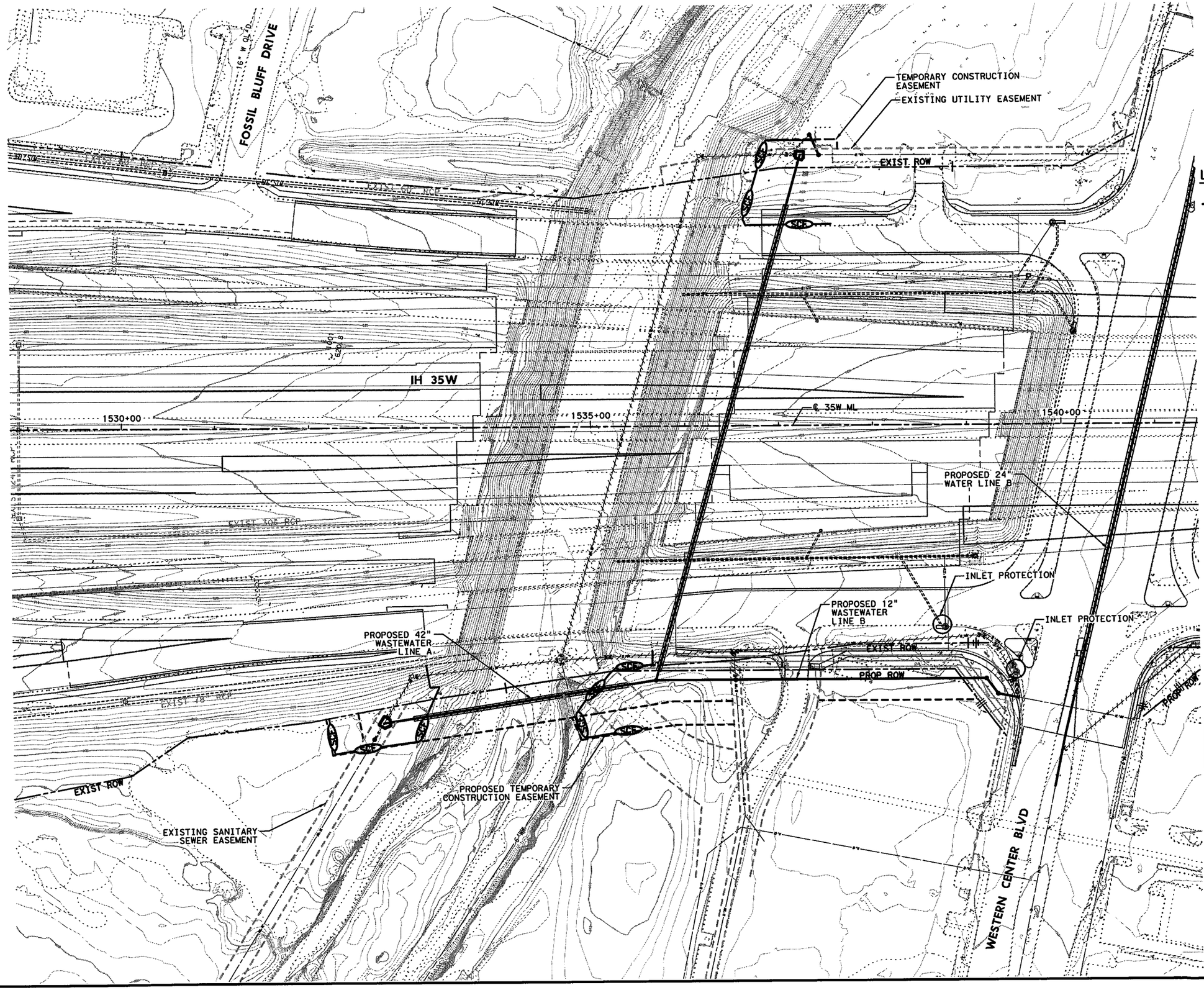

0' 25' 50' 100'

SCALE IN FEET

CITY OF FORT WORTH MAP # - 2054-432

LEGEND:

- SCF — SEDIMENT CONTROL FENCE
- RFD2 — ROCK FILTER DAM TYPE 2
- CONTRUCTION EXIT TYPE 1 (TO BE PLACED AS DIRECTED BY THE ENGINEER)
- INLET PROTECTION

STATE OF TEXAS
RYAN D. OWEN
109586
LICENSED
PROFESSIONAL ENGINEER
7/13/2012

Kimley-Horn and Associates, Inc.
TEXAS REGISTERED ENGINEERING FIRM F-928

Texas Department of Transportation
© 2012

IH 35W FROM NORTH TARRANT PKWY TO IH 820

IH 35W UTILITY RELOCATIONS

EROSION CONTROL PLAN

SCALE: 1" = 100'

SHEET 52 OF 54

DESIGN	FED. RD. DIV. NO.	FEDERAL AID PROJECT NO.		HIGHWAY NO.
KHA	6	(SEE TITLE SHEET)		IH 35W
GRAPHICS	STATE	DISTRICT	COUNTY	SHEET NO.
KHA	TEXAS	FTW	TARRANT	1390
CHECK	CONTROL	SECTION	JOB	
KHA	0014	16	255, ETC.	
CHECK				
KHA				

DRAWING DATE: 7/13/2012 FILENAME: S38PUTILEROSION*01.dgn

0' 25' 50' 100'

SCALE IN FEET

CITY OF FORT WORTH MAP # - 2054-432

LEGEND:

- SCF — SEDIMENT CONTROL FENCE
- RFD2 — ROCK FILTER DAM TYPE 2
- CONTRUCTION EXIT TYPE 1 (TO BE PLACED AS DIRECTED BY THE ENGINEER)
- INLET PROTECTION

STATE OF TEXAS
RYAN D. OWEN
109586
LICENSED
PROFESSIONAL ENGINEER
PE
7/13/2012

Kimley-Horn and Associates, Inc.
TEXAS REGISTERED ENGINEERING FIRM F-928

Texas Department of Transportation
© 2012

IH 35W FROM NORTH TARRANT PKWY TO IH 820

IH 35W UTILITY RELOCATIONS

EROSION CONTROL PLAN

SCALE: 1" = 100'

SHEET 53 OF 54

DESIGN	FED. RD. DIV. NO.	FEDERAL AID PROJECT NO.		HIGHWAY NO.
KHA	6	(SEE TITLE SHEET)		IH 35W
GRAPHICS	STATE	DISTRICT	COUNTY	SHEET NO.
KHA	TEXAS	FTW	TARRANT	1391
CHECK	CONTROL	SECTION	JOB	
KHA	0014	16	255, ETC.	

FILENAME: S3BPUTILEROSION#02.dgn

DRAWING DATE: 7/13/2012

1. SET THE STAKES.

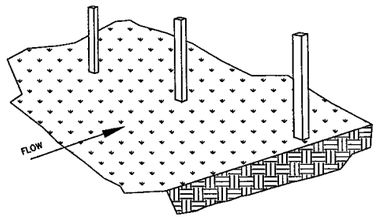

3. STAPLE FILTER MATERIAL TO STAKES AND EXTEND IT INTO THE TRENCH.

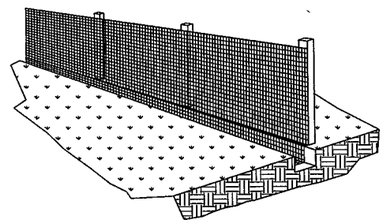

2. EXCAVATE A 4" X 4" TRENCH UPSLOPE ALONG THE LINE OF STAKES.

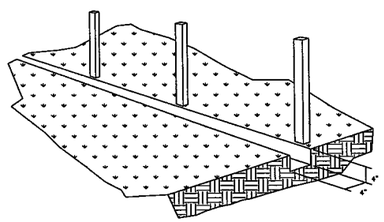

4. BACKFILL AND COMPACT THE EXCAVATED SOIL.

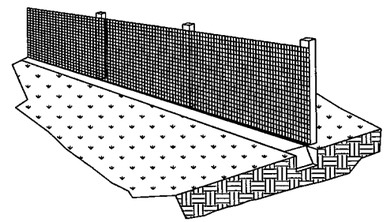

CONSTRUCTION SPECIFICATIONS FOR SILT BARRIER FENCE

MATERIALS

1. SYNTHETIC FILTER FABRIC SHALL BE A PERVIOUS SHEET OF PROPYLENE, NYLON, POLYESTER OR ETHYLENE YARN AND SHALL BE CERTIFIED BY THE MANUFACTURER OR SUPPLIER AS CONFORMING TO THE FOLLOWING REQUIREMENTS (PER ASTM METHODS):

PHYSICAL PROPERTY	REQUIREMENTS
FILTERING EFFICIENCY	75% (MIN.)
TENSILE STRENGTH AT 20% MAXIMUM ELONGATION	EXT. STRENGTH = 50 LBS./LIN. IN. (MIN.) STD. STRENGTH = 30 LBS./LIN. IN. (MIN.)
FLOW RATE	30 GAL./SQ. FT./MINUTE (MIN.)

2. SYNTHETIC FILTER FABRIC SHALL CONTAIN ULTRAVIOLET RAY INHIBITORS AND STABILIZERS TO PROVIDE A MINIMUM OF 6 MONTHS OF EXPECTED USABLE CONSTRUCTION LIFE AT A TEMPERATURE RANGE OF 0° TO 120°.

INSTALLATION

1. THE HEIGHT OF THE SILT FENCE SHALL BE A MINIMUM OF 15" AND A MAXIMUM OF 18" ABOVE FINAL GRADE.
2. STANDARD STRENGTH SYNTHETIC FILTER FABRIC SHALL BE PURCHASED IN A CONTINUOUS ROLL AND CUT TO THE LENGTH OF THE BARRIER TO AVOID THE USE OF JOINTS (AND THUS IMPROVE THE BARRIER'S STRENGTH AND EFFICIENCY).
3. STAKES FOR THE SILT FENCE SHALL BE 2"x 2" WOOD WITH A MINIMUM LENGTH OF 3 FEET.
4. THE STAKES SHALL BE SPACED A MAXIMUM OF 5 FEET APART AT THE BARRIER LOCATION AND DRIVEN SECURELY INTO THE GROUND (18" MIN.).
5. A TRENCH SHALL BE EXCAVATED APPROX. 6" WIDE AND 6" DEEP ALONG THE LINE OF STAKES AND UPSLOPE FROM THE BARRIER.
6. THE SILT FENCE SHALL BE STAPLED TO THE STAKES WITH 8" (MIN.) OF FABRIC EXTENDED INTO THE TRENCH. HEAVY DUTY WIRE STAPLES (1/2 INCH LONG MIN.) SHALL BE USED. THE FENCE SHALL NOT BE STAPLED TO EXISTING TREES.
7. THE TRENCH SHALL BE BACKFILLED AND THE SOIL COMPACTED OVER THE FENCE MATERIAL.
8. IF A SILT FENCE IS TO BE CONSTRUCTED ACROSS A DITCH LINE OR SWALE, THE BARRIER SHALL BE OF SUFFICIENT LENGTH TO ELIMINATE END FLOW. THE PLAN CONFIGURATION SHALL RESEMBLE AN ARC OR HORSESHOE WITH THE ENDS ORIENTED UPSLOPE.
9. SILT FENCES SHALL BE REMOVED WHEN THEY HAVE SERVED THEIR USEFUL PURPOSE, BUT NOT BEFORE THE UPSLOPE AREA HAS BEEN PERMANENTLY STABILIZED.

MAINTENANCE

1. SILT FENCES SHALL BE INSPECTED IMMEDIATELY AFTER RAINFALL AND AT LEAST DAILY DURING PROLONGED RAINFALL. ANY REQUIRED REPAIRS SHALL BE MADE IMMEDIATELY.
2. SHOULD THE FABRIC ON A SILT FENCE DECOMPOSE OR BECOME INEFFECTIVE PRIOR TO THE END OF THE EXPECTED USABLE LIFE AND THE SILT FENCE IS STILL NECESSARY, IT SHALL BE REPLACED IMMEDIATELY.
3. SEDIMENT DEPOSITS SHALL BE REMOVED WHEN DEPOSITS REACH APPROXIMATELY 1/3 THE HEIGHT OF THE FENCE.
4. ANY SEDIMENT DEPOSITS REMAINING IN PLACE AFTER THE SILT FENCE IS NO LONGER REQUIRED SHALL BE DRESSED TO CONFORM WITH THE EXISTING GRADE, PREPARED AND SEEDED.
5. THERE SHOULD BE NO GAPS OR SAGS IN THE SILT FENCE.

CONSTRUCTION OF A SILT BARRIER FENCE DETAIL

(1) SCALE: N.T.S.

NOTE:

VERTICAL PANEL BARRICADES TO BE PLACED WHEN LOCATED ON AN ACTIVE STREET.

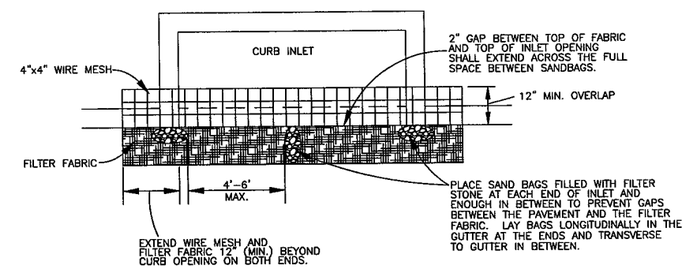

INLET PLAN VIEW

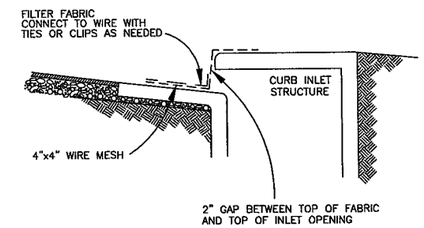

INLET SECTION

CURB INLET PROTECTION DETAIL

(2) SCALE: N.T.S.

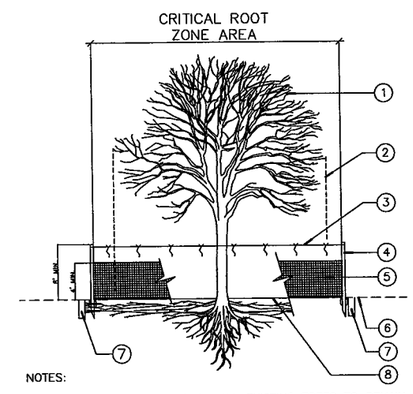

1. EXISTING TREE(S) TO REMAIN.
2. DRIPLINE OF EXISTING TREE (TYP)
3. CONTINUOUS NYLON TIE STRING TIED TO STAKE TOPS W/ 2' TUNDRA WEIGHT ORANGE STREAMERS @ 3' O.C.
4. 8' METAL T-STAKES: 8' O.C. MIN., DRIVEN 2' INTO GROUND AT (OR OUTSIDE) TREE DRIPLINE
5. 4' MIN. HEIGHT ORANGE PLASTIC FENCING INSTALLED PER MANF. RECOMMENDATIONS (TYP). SUPPLEMENT W/ SILT FENCE FABRIC @ PRUNING TRENCH AS REQ'D.
6. EXISTING GRADE TO BE DISTURBED.
7. ROOT PRUNING TRENCH 12" OUTSIDE FENCE - SEE NOTES. (ON TRENCH SIDE OF TREE ONLY)
8. EXISTING GRADE TO REMAIN.

NOTES:

1. PERFORM ROOT PRUNING ON ALL EXISTING TREES TO REMAIN WHERE CONSTRUCTION ACTIVITY FALLS WITHIN DRIP LINE OF EXISTING TREES. ALL ROOT PRUNING SHALL BE PERFORMED BY HAND WITH A SAW OR OTHER CUTTING TOOL. NO ROOT PRUNING SHALL OCCUR BY MEANS OF EXCAVATION EQUIPMENT.
2. NO GRADING, PARKING, STORAGE OR ANY OTHER CONSTRUCTION ACTIVITY WITHIN FENCED AREA.
3. CONTACT CITY INSPECTOR AND J.C. TOLSON (817-392-8408) PRIOR TO PERFORMING ANY PRUNING.

TREE PROTECTION DETAIL

(3) SCALE: N.T.S.

STATE OF TEXAS
RYAN D. OWEN
109586
LICENSED
PROFESSIONAL ENGINEER
PE
7/13/2012

Kimley-Horn and Associates, Inc.
TEXAS REGISTERED ENGINEERING FIRM F-928

Texas Department of Transportation
© 2012

IH 35W FROM NORTH TARRANT PKWY TO IH 820

IH 35W UTILITY RELOCATIONS
EROSION CONTROL DETAILS

SHEET 54 OF 54

DESIGN	FED.RD. DIV.NO.	FEDERAL AID PROJECT NO.		HIGHWAY NO.
KHA	6	(SEE TITLE SHEET)		IH 35W
GRAPHICS KHA	STATE	DISTRICT	COUNTY	SHEET NO.
CHECK KHA	TEXAS	FTW	TARRANT	1392
CHECK KHA	CONTROL	SECTION	JOB	
	0014	16	255, ETC.	

FILENAME: S3BPUTILEROSION*DETAILS*01.dgn

DRAWING DATE: 7/13/2012