FED. RD. DIV. NO.	FEDERAL AID PROJECT NO.		SHEET NO.
6	IM 0335(151)		1393
STATE	STATE DIST.	COUNTY	
TEXAS	2	TARRANT	
CONT.	SECT.	JOB	HIGHWAY NO.
0014	16	255, ETC	IH 35W

STATE OF TEXAS
DEPARTMENT OF TRANSPORTATION

FUNCTIONAL CLASS: URBAN FREEWAY
DESIGN SPEED: 70 MPH MANAGED/GENERAL PUROOSE LANES
45 MPH RAMPS & MANAGED LANE RAMPS
40-45 MPH DIRECT CONNECTORS
40 MPH FRONTAGE ROADS
35 MPH CROSS STREETS

PLANS OF PROPOSED
STATE HIGHWAY IMPROVEMENT

FEDERAL AID PROJECT: IM 0335(151)
TARRANT COUNTY
IH-35W (URBAN FREEWAY)
VOLUME 5

LIMITS: FROM NORTH TARRANT PARKWAY TO IH 820
NET LENGTH OF PROJECT = 18,900.00 FT = 3.580 MI.

ADT	2010	2030
NORTH TARRANT PKWY TO US 287 SPLIT	115,100	178,700
US 287 SPLIT TO IH 820	174,900	269,800

INDEX OF SHEETS

SHEET NO.	DESCRIPTION
1	TITLE SHEET
2	INDEX OF SHEETS

TDLR INSPECTION REQUIRED

LOCATION	ROADWAY	BRIDGE	TOTAL
CSJ 0014-16-255	13,860.99 FT = 2.626 MI.	576.91 FT = 0.109 MI.	14,437.90 FT = 2.735 MI.
CSJ 0081-12-045	4,462.10 FT = 0.845 MI.	-	4,462.10 FT = 0.845 MI.
TOTAL	18,523.09 FT = 3.475 MI.	576.91 FT = 0.109 MI.	18,900.00 FT = 3.580 MI.
CSJ 0014-16-267	(ROW AND UTILITIES)	-	14,437.90 FT = 2.735 MI.

FOR THE CONSTRUCTION OF A FREEWAY FACILITY CONSISTING OF WIDENING, GRADING, DRAINAGE, STRUCTURES, SURFACE, AND STRIPING.

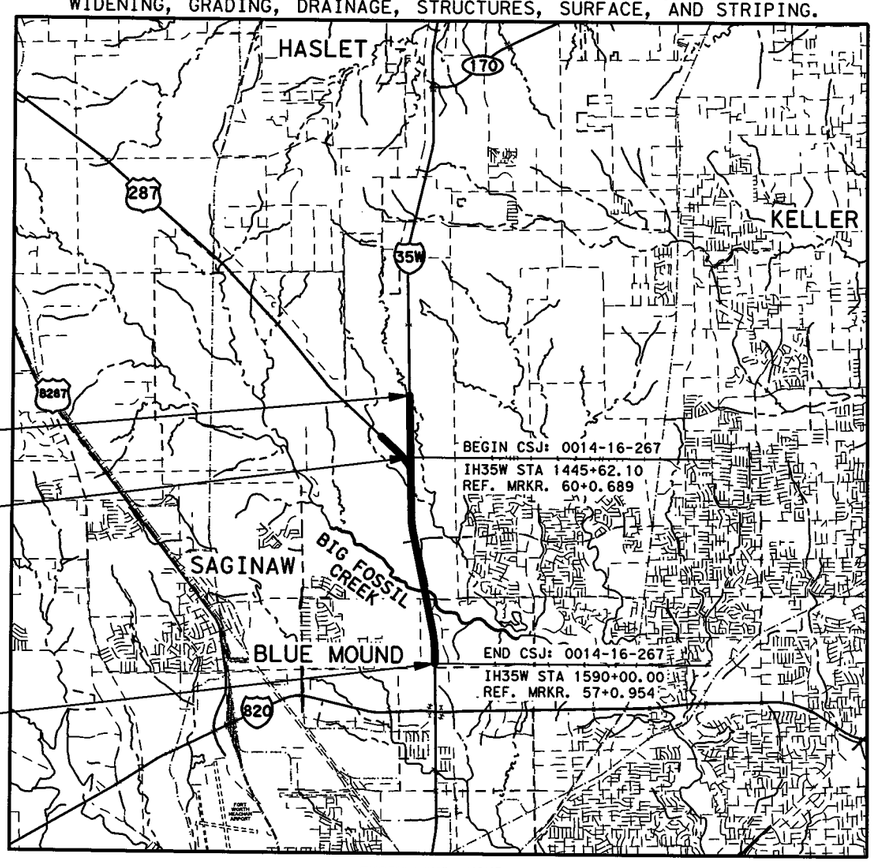

EXCEPTIONS: NONE
EQUATIONS: NONE
RAILROADS: NONE

SPECIFICATIONS ADOPTED BY THE TEXAS DEPARTMENT OF TRANSPORTATION, JUNE 1, 2004 AND SPECIFICATION ITEMS LISTED AND DATED AS FOLLOWS, SHALL GOVERN ON THIS PROJECT: REQUIRED CONTRACT PROVISIONS FOR ALL FEDERAL-AID CONSTRUCTION CONTRACTS (FORM FHWA 1273, MARCH 1994).

FINAL PLANS

LETTING DATE: _____
DATE CONTRACTOR BEGAN WORK: _____
DATE WORK WAS COMPLETED & ACCEPTED: _____
FINAL CONTRACT COST: _____
CONTRACTOR: _____

STATE OF TEXAS
M. N. MOZAFFAR
85191
LICENSED
PROFESSIONAL ENGINEER

STATE OF TEXAS
KURT W. AUNGST
90848
LICENSED
PROFESSIONAL ENGINEER

I. S. ENGINEERS, LLC

KENNEDY CONSULTING

SUBMITTED BY 7/13/2012
PROJECT MANAGER

SUBMITTED BY 7/13/12
DEPUTY PROJECT MANAGER

TEXAS DEPARTMENT OF TRANSPORTATION

SUBMITTED FOR LETTING
AREA ENGINEER

RECOMMENDED FOR LETTING
DISTRICT DESIGN ENGINEER

APPROVED FOR LETTING
DIRECTOR, TRAFFIC OPERATIONS DIVISION

RECOMMENDED FOR LETTING
DISTRICT ENGINEER

APPROVED FOR LETTING
DIRECTOR, DESIGN DIVISION

DRAWING DATE: 7/13/2012 FILENAME: S3BTITLE05.dgn
COUNTY TARRANT PROJ. NO.
HWY. NO. LETTING DATE
DATE ACCEPTED

©2012 by Texas Department of Transportation; all rights reserved.

SHEET NO.	DESCRIPTION
	VOLUME I
	I. GENERAL
1	TITLE SHEET
2-6	INDEX OF SHEETS
7	PROJECT LAYOUT KEY MAP
8-17	PROJECT LAYOUTS
18-23	TYPICAL SECTIONS - EXISTING
24-54	TYPICAL SECTIONS - PROPOSED
55, 55A-55C, 56	TYPICAL SECTIONS - MISCELLANEOUS DETAILS
57, 57A-57_	GENERAL NOTES
58, 58A-58_	ESTIMATE AND QUANTITY SUMMARY
59-91	QUANTITY SUMMARY - TRAFFIC CONTROL
92	QUANTITY SUMMARY - REMOVAL
93-97, 97A-97B	QUANTITY SUMMARY - PAVEMENT
98-100A	QUANTITY SUMMARY - EARTHWORK
101-102	QUANTITY SUMMARY - MANAGED LN & GEN PURPOSE LN - ROADWAY ITEMS
103	QUANTITY SUMMARY - DIRECT CONNECTOR & RAMP - ROADWAY ITEMS
104-105	QUANTITY SUMMARY - FRONTAGE ROAD - ROADWAY ITEMS
106	QUANTITY SUMMARY - CROSS STREET - ROADWAY ITEMS
107	DRIVEWAY & MISCELLANEOUS
108	QUANTITY SUMMARY - RETAINING WALL
109-126	SUMMARY OF DRAINAGE QUANTITIES
127	QUANTITY SUMMARY - EROSION CONTROL
128-132	QUANTITY SUMMARY - BRIDGES
133-135	QUANTITY SUMMARY - SIGN ASSEMBLIES
136-137, 137A-137B	QUANTITY SUMMARY - STRIPING ITEMS
138	QUANTITY SUMMARY - DELINEATION ITEMS
139-143	ILLUMINATION SUMMARY
144-149	ITS SUMMARY
150-154	TRAFFIC SIGNAL SUMMARY
155-159	UTILITY SUMMARY
160-169	SUMMARY OF SMALL SIGNS
170-175	SUMMARY OF LARGE SIGNS
	VOLUME II
	II. TRAFFIC CONTROL PLAN
176	TITLE SHEET
177-181	INDEX OF SHEETS
182-183, 183A	CONSTRUCTION SEQUENCE NARRATIVE
184-193	OVERALL CONSTRUCTION SEQUENCE LAYOUT
194	ADVANCE WARNING SIGNS
195-204	CONSTRUCTION SEQUENCE LAYOUT - PHASE 1 STEP 1
205-208	TCP SECTION - PHASE 1 STEP 1
209-232	TRAFFIC CONTROL PLAN - PHASE 1 STEP 1
233	DETOUR RAMP 35S-BB
234-243	CONSTRUCTION SEQUENCE LAYOUT - PHASE 1 STEP 2
244-247	TCP SECTION - PHASE 1 STEP 2
248-271	TRAFFIC CONTROL PLAN - PHASE 1 STEP 2
272	TCP SECTION - PHASE 1 STEP 2B
273-274, 274A	TRAFFIC CONTROL PLAN - PHASE 1 STEP 2B
275	DETOUR DC 35S-287W
276-285	CONSTRUCTION SEQUENCE LAYOUT - PHASE 1 STEP 3
286-289	TCP SECTION - PHASE 1 STEP 3
290-313	TRAFFIC CONTROL PLAN - PHASE 1 STEP 3
314-323	CONSTRUCTION SEQUENCE LAYOUT - PHASE 2 STEP 1
324-327	TCP SECTION - PHASE 2 STEP 1
328-351	TRAFFIC CONTROL PLAN - PHASE 2 STEP 1
352-353	TRAFFIC CONTROL PLAN - PHASE 2 STEP 1B
354-355	TRAFFIC CONTROL PLAN - PHASE 2 STEP 1C
356-365	CONSTRUCTION SEQUENCE LAYOUT - PHASE 2 STEP 2
366-369	TCP SECTION - PHASE 2 STEP 2
370-393	TRAFFIC CONTROL PLAN - PHASE 2 STEP 2
393A	TRAFFIC CONTROL PLAN - PHASE 2 STEP 2B
394	DETOUR RAMP 35N-WCB
395-404	CONSTRUCTION SEQUENCE LAYOUT - PHASE 2 STEP 3
405-408	TCP SECTION - PHASE 2 STEP 3
409-432	TRAFFIC CONTROL PLAN - PHASE 2 STEP 3
432A-432C	TRAFFIC CONTROL PLAN - PHASE 2 STEP 3B
433-442	CONSTRUCTION SEQUENCE LAYOUT - PHASE 3 STEP 1
443-446	TCP SECTION - PHASE 3 STEP 1
447-470	TRAFFIC CONTROL PLAN - PHASE 3 STEP 1
470A-470B	TRAFFIC CONTROL PLAN - PHASE 3 STEP 1B
471	DETOUR RAMP NTP-35S
472	DETOUR DC 287E-35S
473-482	CONSTRUCTION SEQUENCE LAYOUT - PHASE 3 STEP 2
483-486	TCP SECTION - PHASE 3 STEP 2
487-510	TRAFFIC CONTROL PLAN - PHASE 3 STEP 2

SHEET NO.	DESCRIPTION
	VOLUME II (CONT'D)
	II. TRAFFIC CONTROL PLAN
510A	TCP SECTION - PHASE 3 STEP 2B
510B-510I	TRAFFIC CONTROL PLAN - PHASE 3 STEP 2B
511-520	CONSTRUCTION SEQUENCE LAYOUT - PHASE 4 STEP 1
521-524	TCP SECTION - PHASE 4 STEP 1
525-548	TRAFFIC CONTROL PLAN - PHASE 4 STEP 1
549-558	CONSTRUCTION SEQUENCE LAYOUT - PHASE 4 STEP 2
559-562	TCP SECTION - PHASE 4 STEP 2
563-586	TRAFFIC CONTROL PLAN - PHASE 4 STEP 2
587-596	CONSTRUCTION SEQUENCE LAYOUT - PHASE 5
597-600	TCP SECTION - PHASE 5
601-624	TRAFFIC CONTROL PLAN - PHASE 5
624A-624C	TRAFFIC CONTROL PLAN - PHASE 5B
625-630, 630A-630E	OFFSITE DETOUR PLAN
631	TEMPORARY RETAINING WALL DETAIL SHEET
632	CONSTRUCTION SEQUENCE FOR MISC DRIVEWAYS
	STANDARDS
633-644	**BC(1)-07 THRU BC(12)-07
645	**WZ(TD)-03
646-647	**WZ(BTS-1)-03 AND WZ(BTS-2)-03
648	**WZ(STPM)-03
649	**WZ(UL)-03
650	**OMIT
651	**TCP(1-2)-12
652	**TCP(1-4)-12
653	**TCP(2-1)-12
654-656	**TCP(2-4)-12 THRU TCP (2-6)-12
657-658	**TCP(3-2)-98 AND TCP (3-3)-98
659-665	**TCP(6-1)-98A THRU TCP (6-7)-98A
666	**TCP(6-8)-98
667	**OMIT
668-669	**LPCB-10(TYPE1) AND LPCB-10(TYPE2)
670, 670A	**SSCB(2)-10
670B	**SSCB(5)-10
671	**REACT(W)-03
	VOLUME III
	III. ROADWAY DETAILS
672	TITLE SHEET
673-677	INDEX OF SHEETS
678-700	REMOVAL PLANS
701-704	HORIZONTAL AND VERTICAL CONTROL
705-720	HORIZONTAL ALIGNMENT DATA
721-723	ROADWAY PLAN AND PROFILE - MANAGED LANE TRANSITIONS
724-738	ROADWAY PLAN AND PROFILE - MANAGED LANES
739-742	ROADWAY PLAN AND PROFILE - GENERAL PURPOSE LANE TRANSITIONS
743-764	ROADWAY PLAN AND PROFILE - GENERAL PURPOSE LANES
765-766	ROADWAY PLAN AND PROFILE - GENERAL PURPOSE LANE TRANSITION
767-777	ROADWAY PLAN AND PROFILE - NORTHBOUND FRONTAGE ROAD
778-789	ROADWAY PLAN AND PROFILE - SOUTHBOUND FRONTAGE ROAD
790-809	ROADWAY PLAN AND PROFILE - RAMPS
810-823	ROADWAY PLAN AND PROFILE - DIRECT CONNECTORS
824-825	ROADWAY PLAN AND PROFILE - US 287
826-827	ROADWAY PLAN AND PROFILE - BASSWOOD BLVD
828-829	ROADWAY PLAN AND PROFILE - WESTERN CENTER BLVD
830	ROADWAY PLAN AND PROFILE - FOSSIL CREEK BLVD
831-832	SUPERELEVATION DATA
833-834	METAL BEAM GUARD FENCE SUMMARY
834A	CRASH CUSHION SUMMARY SHEET
835-836, 836A, 837, 837A, 838, 838A, 839-840	INTERSECTION LAYOUT
841-848	DRIVEWAY PROFILES
849-851	DRIVEWAY DETAILS
852-868	GORE CONTOUR PLANS
869-875	RIPRAP LAYOUT
876	RIPRAP DETAIL
877-878	U-TURN MEDIAN DETAILS
879-881	TRAFFIC ISLAND DETAILS
882-883	SUPPLEMENTAL GRADING
884-890	MISCELLANEOUS ROADWAY DETAILS
891-892	BTD (HOU)

SHEET NO.	DESCRIPTION
	VOLUME III (CONT'D)
	III. ROADWAY DETAILS
	STANDARDS
893	*MBGF-09
894	*MBGF-11
895	*GF(31)-11
896	*GF(31)LS-11
897	*GF(31)DAT-11
898	*GF(31)TR-11
899	*GF(31)TL2-11
900	*GF(31)MS-11
901	*SGT(7S)31-11
902	*CRCP(1)-11
903	*TE(HMAC)-11
904	*BED-11
905	*PCTB(1)-04
906	*SSCB(1)-10
907	*SSCB(1F)-10
908	*SSCB(3)-10
909-910	*CSB(1)-10
911	*CSB(2)-10
912	*CDD-08(FW)
913	*CP-TD-03(FW)
914	*CP-TEP-03 (FW)
915	*RS(1)-10
916	*JS-03(FW)
917	*CC-CG(FW)
918-921	*PED-12
922	*PRD-06
923	*TRF
924-925	*SSTR
926	*CSWD-08(FW)
927	*CRVC (FW)
928	*LPD-00 (FW)
929	*REACT(N)-12
930	*SMTC(W)-06
931	*HEART-10
	IV. RETAINING WALL DETAILS
932-934	RETAINING WALLS KEYMAP
935	RETAINING WALLS - PLAN AND PROFILE - NB01-A
936	RETAINING WALLS - TYPICAL SECTIONS - NB01-A
937	RETAINING WALLS - PLAN AND PROFILE - NB01-R
938	RETAINING WALLS - TYPICAL SECTIONS - NB01-R
939	RETAINING WALLS - PLAN AND PROFILE - NB02-A
940	RETAINING WALLS - TYPICAL SECTIONS - NB02-A

STATE OF TEXAS
KURT W. AUNGST
90848
LICENSED
PROFESSIONAL ENGINEER

* THE STANDARD SHEETS SPECIFICALLY IDENTIFIED ABOVE HAVE BEEN SELECTED BY ME OR UNDER MY RESPONSIBLE SUPERVISION AS BEING APPLICABLE TO THIS PROJECT.

KURT W. AUNGST, P.E. , P.E. 8/30/12 DATE

STATE OF TEXAS
M. N. MOZAFFAR
85191
LICENSED
PROFESSIONAL ENGINEER

** THE STANDARD SHEETS SPECIFICALLY IDENTIFIED ABOVE HAVE BEEN SELECTED BY ME OR UNDER MY RESPONSIBLE SUPERVISION AS BEING APPLICABLE TO THIS PROJECT.

M. N. MOZAFFAR, P.E. , P.E. 8/30/12 DATE

KENNEDY CONSULTING
TBPE REGISTRATION NO. F-926

I. S. ENGINEERS, LLC
TBPE REG. # F-11657

Texas Department of Transportation
© 2012

IH 35W FROM NORTH TARRANT PKWY TO IH 820

INDEX OF SHEETS

SHEET 1 OF 5

DESIGN	FED.RD. DIV.NO.	FEDERAL AID PROJECT NO.		HIGHWAY NO.
KCI	6	(SEE TITLE SHEET)		IH 35W
GRAPHICS	STATE	DISTRICT	COUNTY	SHEET NO.
KCI	TEXAS	FTW	TARRANT	
CHECK	CONTROL	SECTION	JOB	1394
KCI	0014	16	255, ETC.	
CHECK				
KCI				

FILENAME: S3BINDEX51.dgn
DRAWING DATE: 8/30/2012

SHEET NO.	DESCRIPTION
	VOLUME III (CONT'D)
	IV. RETAINING WALL DETAILS
941-943	RETAINING WALLS - PLAN AND PROFILE - NB02-L
944	RETAINING WALLS - TYPICAL SECTIONS - NB02-L
945-947	RETAINING WALLS - PLAN AND PROFILE - NB02-R
948	RETAINING WALLS - TYPICAL SECTIONS - NB02-R
949	RETAINING WALLS - PLAN AND PROFILE - NB03-A
950	RETAINING WALLS - TYPICAL SECTIONS - NB03-A
951	RETAINING WALLS - PLAN AND PROFILE - NB03-L
952	RETAINING WALLS - TYPICAL SECTIONS - NB03-L
953-956	RETAINING WALLS - PLAN AND PROFILE - NB03-R
957	RETAINING WALLS - TYPICAL SECTIONS - NB03-R
958-959	RETAINING WALLS - PLAN AND PROFILE - NB04
960	RETAINING WALLS - TYPICAL SECTIONS - NB04
961-962	RETAINING WALL - STRUCTURAL LAYOUT - NB04
963	RETAINING WALLS - PLAN AND PROFILE - NB05-A
964	RETAINING WALLS - TYPICAL SECTIONS - NB05-A
965-967	RETAINING WALLS - PLAN AND PROFILE - NB05-L
968	RETAINING WALLS - TYPICAL SECTIONS - NB05-L
969-971	RETAINING WALLS - PLAN AND PROFILE - NB05-R
972	RETAINING WALLS - TYPICAL SECTIONS - NB05-R
973	RETAINING WALLS - PLAN AND PROFILE - NB06-A
974	RETAINING WALLS - TYPICAL SECTIONS - NB06-A
975-978	RETAINING WALLS - PLAN AND PROFILE - NB06-L
979	RETAINING WALLS - TYPICAL SECTIONS - NB06-L
980-983	RETAINING WALLS - PLAN AND PROFILE - NB06-R
984	RETAINING WALLS - TYPICAL SECTIONS - NB06-R
985	RETAINING WALLS - PLAN AND PROFILE - NB07-A2
986	RETAINING WALLS - TYPICAL SECTIONS - NB07-A2
987-988	RETAINING WALLS - PLAN AND PROFILE - NB07-L
989	RETAINING WALLS - TYPICAL SECTIONS - NB07-L
990	RETAINING WALLS - PLAN AND PROFILE - NB08-A
991	RETAINING WALLS - TYPICAL SECTIONS - NB08-A
992-995	RETAINING WALLS - PLAN AND PROFILE - NB08-L
996	RETAINING WALLS - TYPICAL SECTIONS - NB08-L
997-999	RETAINING WALLS - PLAN AND PROFILE - NB09
1000	RETAINING WALLS - TYPICAL SECTIONS - NB09
1001-1004	RETAINING WALLS - PLAN AND PROFILE - NB10
1005	RETAINING WALLS - TYPICAL SECTIONS - NB10
1006	RETAINING WALLS - PLAN AND PROFILE - SB01-A
1007	RETAINING WALLS - TYPICAL SECTIONS - SB01-A
1008-1010	RETAINING WALLS - PLAN AND PROFILE - SB01-L
1011	RETAINING WALLS - TYPICAL SECTIONS - SB01-L
1012-1014	RETAINING WALLS - PLAN AND PROFILE - SB01-R
1015	RETAINING WALLS - TYPICAL SECTIONS - SB01-R
1016	RETAINING WALLS - PLAN AND PROFILE - SB02-A
1017	RETAINING WALLS - TYPICAL SECTIONS - SB02-A
1018-1020	RETAINING WALLS - PLAN AND PROFILE - SB02-L
1021	RETAINING WALLS - TYPICAL SECTIONS - SB02-L
1022	RETAINING WALLS - PLAN AND PROFILE - SB02-R
1023	RETAINING WALLS - TYPICAL SECTIONS - SB02-R
1024-1027	RETAINING WALLS - PLAN AND PROFILE - SB03
1028	RETAINING WALLS - TYPICAL SECTIONS - SB03
1029-1032	RETAINING WALL - STRUCTURAL LAYOUT - SB03
1033	RETAINING WALLS - PLAN AND PROFILE - SB04-A
1034	RETAINING WALLS - TYPICAL SECTIONS - SB04-A
1035-1037	RETAINING WALLS - PLAN AND PROFILE - SB04-L
1038	RETAINING WALLS - TYPICAL SECTIONS - SB04-L
1039-1042	RETAINING WALLS - PLAN AND PROFILE - SB04-R
1043	RETAINING WALLS - TYPICAL SECTIONS - SB04-R
1044	RETAINING WALLS - PLAN AND PROFILE - SB05-A
1045	RETAINING WALLS - TYPICAL SECTIONS - SB05-A
1046-1048	RETAINING WALLS - PLAN AND PROFILE - SB05-L
1049	RETAINING WALLS - TYPICAL SECTIONS - SB05-L
1050-1052	RETAINING WALLS - PLAN AND PROFILE - SB05-R
1053	RETAINING WALLS - TYPICAL SECTIONS - SB05-R
1054	RETAINING WALLS - PLAN AND PROFILE - SB06-A2
1055	RETAINING WALLS - TYPICAL SECTIONS - SB06-A2
1056-1057	RETAINING WALLS - PLAN AND PROFILE - SB06-R
1058	RETAINING WALLS - TYPICAL SECTIONS - SB06-R
1059	RETAINING WALLS - PLAN AND PROFILE - SB07-A
1060	RETAINING WALLS - TYPICAL SECTIONS - SB07-A
1061-1064	RETAINING WALLS - PLAN AND PROFILE - SB07-R
1065	RETAINING WALLS - TYPICAL SECTIONS - SB07-R
1066-1068	RETAINING WALLS - PLAN AND PROFILE - SB08
1069	RETAINING WALLS - TYPICAL SECTIONS - SB08
1070	RETAINING WALLS - PLAN AND PROFILE - SB09
1071	RETAINING WALLS - TYPICAL SECTIONS - SB09
1072-1073	RETAINING WALLS - MISCELLANEOUS DETAILS
1073A	RETAINING WALLS - WALL FINISH DETAILS

SHEET NO.	DESCRIPTION
	VOLUME III (CONT'D)
	IV. RETAINING WALL DETAILS
1073B	RETAINING WALLS - UNDERDRAIN DETAILS
1074-1076	RETAINING WALLS - GEOTECHNICAL RECOMMENDATIONS
1077-1080	RETAINING WALLS - SOIL NAIL DETAILS
1081-1085	RETAINING WALLS - DRILLED SHAFT DETAILS
1086-1087	RETAINING WALLS - MISCELLANEOUS STRUCTURAL DETAILS
1088-1101	BORING PLAN
1102-1124, 1124A-1124Q	BORING LOGS
	STANDARDS
1125	*RW(EM)
1126	*RW(BTR)
1127	*RW(MSE)(MOD)
1128	*RW(TRF)
1129	*RW 1(L)C (MOD)
1130	*RW2
	VOLUME IV
	V. DRAINAGE DETAILS
1131	TITLE SHEET
1132-1136	INDEX OF SHEETS
1137	OVERALL DRAINAGE AREA MAP - BIG FOSSIL CREEK, STREAM BFC-2, STREAM BFC-2A, TRIBUTARY TO STREAM BFC-2A
1138	DRAINAGE AREA MAP CULVERT STA. 1547+54.76 AND STA. 1561+34.47
1139-1140	HYDRAULIC DATA SHEET - TRIB TO STREAM BFC-2A
1141-1144	HYDRAULIC DATA SHEET - STREAM BFC-2
1145-1152	HYDRAULIC DATA SHEET - BIG FOSSIL CREEK
1153	HYDRAULIC DATA SHEET - CULVERT 3
1154	HYDRAULIC DATA SHEET - CULVERT 4
1155	CULVERT 1 LAYOUT - TRIB TO STREAM BFC-2A
1156-1159	CULVERT 2 LAYOUT - STREAM BFC-2
1160	CULVERT 3 LAYOUT - 35W ML STA. 1547+54.36
1161-1162	CULVERT 4 LAYOUT - 35W ML STA. 1561+34.47
1163	CULVERT 5 LAYOUT - 35W ML STA. 1602+26.16
1164	HORIZONTAL ALIGNMENT DATA - DRAINAGE CHANNELS
1165-1166	CULVERT 1 CHANNEL LAYOUT - TRIB TO STREAM BFC-2A
1167-1170	CULVERT 2 CHANNEL LAYOUT - STREAM BFC-2
1171-1173	DETENTION POND LAYOUT & DETAILS
1174-1175	CULVERT 3 - TEMPORARY SPECIAL SHORING
1176-1185	INTERIOR DRAINAGE AREA MAP
1186-1188	DRAINAGE COMPUTATIONS - RUNOFF COMPUTATIONS
1189-1191	DRAINAGE COMPUTATIONS - ON-GRADE INLET COMPUTATIONS
1192-1195	DRAINAGE COMPUTATIONS - SAG INLET COMPUTATIONS
1196-1204	DRAINAGE COMPUTATIONS - CONVEYANCE COMPUTATIONS
1205-1232	DRAINAGE PLAN & PROFILE - IH 35W MANAGED LANES
1233-1248	DRAINAGE PLAN & PROFILE - IH 35W GENERAL PURPOSE LANES
1249-1256	DRAINAGE PLAN & PROFILE - NBFR
1257-1265	DRAINAGE PLAN & PROFILE - SBFR
1266-1267	DRAINAGE PLAN & PROFILE - 35S-287W DIRECT CONNECTOR
1268-1269	DRAINAGE PLAN & PROFILE - US 287
1270	DRAINAGE PLAN & PROFILE - WESTERN CENTER BLVD
1271-1282	DRAINAGE PROFILES - LATERALS
1283	DRAINAGE DETAILS - MISCELLANEOUS DRAINAGE DETAILS
1284-1285	MECHANICALLY STABILIZED EARTH WALL PIPE BACKFILL DIAGRAM
	STANDARDS
1286	**SCC-MD
1287	**SCC-7
1288	**SCP-MD
1289	**SCP-7
1290	**SCP-8
1291	**MC-MD
1292	**MC-6-16
1293	**BCS
1294	**PW
1295	**CH-PW-S (SPL)
1296	**CI(1)-02(FW)
1297	**DI-1-02 (FW)
1298-1299	**GI-1-02 (FW)
1300	**MH-1-02 (FW)
1301	**MH-M
1302	**SET (1) (FW)
1303	**SET (2) (FW)
1304	**SETP-PD

SHEET NO.	DESCRIPTION
	VOLUME IV (CONT'D)
	STANDARDS
1306-1307	**BD-3 (MOD)
1308	**BD-1 (MOD)
1309	**CH-PW-O
1310	**CH-PW-S
1311	**SCP-3
1312	**SCP-4
1313	**JB-1-02 (FW)
1314-1315	**IL-H-L
1315A-1315B	**SETB-CD
1315C-1315D.	**SETB-PD
	VI. UTILITIES
1316-1338	EXISTING UTILITY LAYOUTS
1339	WATER GENERAL NOTES
1340	WASTEWATER GENERAL NOTES
1341	PROJECT SPECIFIC NOTES
1342	WASTEWATER BYPASS PUMPING PLAN
1343	SHUTDOWN AND SEQUENCING NOTES
1344-1345	EXISTING WATER LINE AND ISOLATION VALVE LOCATION MAP
1346	EXISTING WASTEWATER LINE LOCATION MAP
1347	PROPOSED WATER LINE LOCATION MAP
1348	PROPOSED WASTEWATER LINE LOCATION MAP
1349	CONTROL POINT LOCATIONS FOR PROPOSED WATER AND WASTEWATER LINES
1350	EXISTING WATER LINES TO BE ABANDONED
1351	EXISTING WASTEWATER LINES TO BE ABANDONED
1352-1353	OVERALL LOCATION MAP SHOWING PERMANENT AND TEMPORARY CONSTRUCTION EASEMENTS AND PERMITS
1354-1356	PROPOSED WATER LINE A
1357-1358	PROPOSED WATER LINE B
1359	PROPOSED WATER LINE C
1360-1362	PROPOSED WASTEWATER LINE A
1363	PROPOSED WASTEWATER LINE B
1364-1372	WATER LINE DETAILS
1373-1379	WASTEWATER LINE DETAILS
1380	PAVEMENT DETAILS

STATE OF TEXAS
KURT W. AUNGST
90848
LICENSED
PROFESSIONAL ENGINEER

* THE STANDARD SHEETS SPECIFICALLY IDENTIFIED ABOVE HAVE BEEN SELECTED BY ME OR UNDER MY RESPONSIBLE SUPERVISION AS BEING APPLICABLE TO THIS PROJECT.

KURT W. AUNGST, P.E. , P.E. 8/22/12 DATE

STATE OF TEXAS
M. N. MOZAFFAR
85191
LICENSED
PROFESSIONAL ENGINEER

** THE STANDARD SHEETS SPECIFICALLY IDENTIFIED ABOVE HAVE BEEN SELECTED BY ME OR UNDER MY RESPONSIBLE SUPERVISION AS BEING APPLICABLE TO THIS PROJECT.

M. N. MOZAFFAR, P.E. , P.E. 8/22/2012 DATE

KENNEDY CONSULTING
TBPE REGISTRATION NO. F-926

I. S. ENGINEERS, LLC
TBPE REG. # F-11657

Texas Department of Transportation
© 2012

IH 35W FROM NORTH TARRANT PKWY TO IH 820

INDEX OF SHEETS

SHEET 2 OF 5

DESIGN	FED.RD. DIV.NO.	FEDERAL AID PROJECT NO.		HIGHWAY NO.
KCI	6	(SEE TITLE SHEET)		IH 35W
GRAPHICS KCI	STATE	DISTRICT	COUNTY	SHEET NO.
CHECK KCI	TEXAS	FTW	TARRANT	1395
CHECK KCI	CONTROL	SECTION	JOB	
	0014	16	255, ETC.	

FILENAME: S3BINDEX52.dgn
DRAWING DATE: 8/22/2012

SHEET NO.	DESCRIPTION
	VOLUME IV (CONT'D)
	VI. UTILITIES
1381-1382	TRAFFIC CONTROL PLANS PHASE 1
1383-1384	TRAFFIC CONTROL PLANS PHASE 2
1385-1388	TRAFFIC CONTROL PLANS PHASE 3
1389	TRAFFIC CONTROL PLANS SANITARY SEWER PHASE 1
1390-1391	EROSION CONTROL
1392	EROSION CONTROL DETAILS
	VOLUME V
	VII. BRIDGES
1393	TITLE SHEET
1394-1398	INDEX OF SHEETS
1399-1401	BRIDGE LAYOUT - NB IH 35W TO WB US 287
1402	FOUNDATION LAYOUT
1403	EST. QUANTITIES AND BEARING SEAT ELEV.
1404-1405	ABUTMENT NO. 1
1406-1407	ABUTMENT NO. 6
1408-1410	INTERIOR BENT NO. 2 & 5
1411-1412	INTERIOR BENT NO. 3
1413-1414	INTERIOR BENT NO. 4
1415	COLUMN DETAILS TYPE A
1416	COLUMN DETAILS TYPE B
1417	FOOTING DETAILS TYPE A
1418	FOOTING DETAILS TYPE B
1419	GIRDER LAYOUT (SPAN 1)
1420-1421	120.00' PRESTRESSED CONCRETE I-GIRDER UNIT
1422-1427	493.00' CONTINUOUS PLATE GIRDER UNIT
1428	GIRDER LAYOUT (SPAN 5)
1429-1430	112.00' PRESTRESSED CONCRETE I-GIRDER UNIT
1431-1434	BRIDGE LAYOUT - NB IH 35W ML TO WB US 287
1435-1436	FOUNDATION LAYOUT
1437	EST. QUANTITIES AND BEARING SEAT ELEV.
1438-1439	ABUTMENT NO. 1
1440-1441	ABUTMENT NO. 9
1442-1445	INTERIOR BENT NO. 2, 7 AND 8
1446-1448	INTERIOR BENT NO. 3 & 6
1449-1450	INTERIOR BENT NO. 4
1451-1453	INTERIOR BENT NO. 5
1454	COLUMN DETAILS TYPE A
1455	COLUMN DETAILS TYPE B
1456	COLUMN DETAILS TYPE C
1457	COLUMN DETAILS TYPE D
1458	FOOTING DETAILS TYPE A
1459	FOOTING DETAILS TYPE B
1460	FOOTING DETAILS TYPE C
1461	FOOTING DETAILS TYPE D
1462	GIRDER LAYOUT (SPANS 1 - 2)
1463-1464	236.00' PRESTRESSED CONCRETE I-GIRDER UNIT
1465-1470	440.00' CONTINUOUS PLATE GIRDER UNIT
1471-1476	172.00' PLATE GIRDER UNIT
1477	GIRDER LAYOUT (SPANS 6 - 8)
1478-1479	381.00' PRESTRESSED CONCRETE I-GIRDER UNIT
1480-1482	BRIDGE LAYOUT - EB US 287 TO SB IH 35W ML
1483	FOUNDATION LAYOUT
1484	EST. QUANTITIES AND BEARING SEAT ELEV.
1485-1486	ABUTMENT NO. 1
1487-1488	ABUTMENT NO. 8
1489-1490	INTERIOR BENT NO. 2 & 3
1491-1493	INTERIOR BENT NO. 4
1494-1495	INTERIOR BENT NO. 5
1496-1497	INTERIOR BENT NO. 6
1498-1499	INTERIOR BENT NO. 7
1500	COLUMN DETAILS - TYPE A
1501	COLUMN DETAILS - TYPE B
1502	COLUMN DETAILS - TYPE C
1503	COLUMN DETAILS - TYPE D
1504	FOOTING DETAILS - TYPE A
1505	FOOTING DETAILS - TYPE B
1506	FOOTING DETAILS - TYPE C
1507	FOOTING DETAILS - TYPE D
1508-1510	BRIDGE DRAIN DETAILS
1511	GIRDER LAYOUT (SPANS 1 - 3)
1512-1513	390.00' PRESTRESSED CONCRETE I-GIRDER UNIT
1514-1520	220.00' CONTINUOUS PLATE GIRDER UNIT
1521	GIRDER LAYOUT (SPANS 5 - 7)
1522-1523	305.00' PRESTRESSED CONCRETE I-GIRDER UNIT
1524	BRIDGE LAYOUT - BASSWOOD BLVD NS TURNAROUND - IH 35W UNDERPASS

SHEET NO.	DESCRIPTION
	VOLUME V (CONT'D)
	VII. BRIDGES
1525	ESTIMATED QUANTITIES AND BEARING SEAT ELEV.
1526	FOUNDATION LAYOUT
1527-1528	ABUTMENT NO. 1
1529-1530	ABUTMENT NO. 5
1531	INTERIOR BENT NO. 2
1532	INTERIOR BENT NO. 3
1533	INTERIOR BENT NO. 4
1534	GIRDER LAYOUT (SPANS 1 & 2)
1535-1536	201.00' PRESTRESSED CONCRETE I-GIRDER UNIT (SPANS 1 & 2)
1537	GIRDER LAYOUT (SPANS 3 & 4)
1538-1539	201.00' PRESTRESSED CONCRETE I-GIRDER UNIT (SPANS 3 & 4)
1540	APPROACH SLAB DETAILS
1541	BRIDGE END DETAILS
1542	BRIDGE LAYOUT - BASSWOOD BLVD SN TURNAROUND - IH 35W UNDERPASS
1543	ESTIMATED QUANTITIES AND BEARING SEAT ELEV.
1544	FOUNDATION LAYOUT
1545-1546	ABUTMENT NO. 1
1547-1548	ABUTMENT NO. 5
1549	INTERIOR BENT NO. 2
1550	INTERIOR BENT NO. 3
1551	INTERIOR BENT NO. 4
1552	GIRDER LAYOUT (SPANS 1 & 2)
1553-1554	201.00' PRESTRESSED CONCRETE I-GIRDER UNIT (SPANS 1 & 2)
1555	GIRDER LAYOUT (SPANS 3 & 4)
1556-1557	201.00' PRESTRESSED CONCRETE I-GIRDER UNIT (SPANS 3 & 4)
1558	APPROACH SLAB DETAILS
1559	BRIDGE END DETAILS
1560-1562	BRIDGE LAYOUT - SB IH35W ENTRANCE RAMP TO MANAGED LANES
1563	EST. QUANTITIES AND BEARING SEAT ELEV.
1564	FOUNDATION LAYOUT
1565	FOOTING DETAILS - BENTS 2, 3, 7 & 8
1566	FOOTING DETAILS - BENTS 4 & 6
1567	FOOTING DETAILS - BENT 5
1568	ABUTMENT NO. 1
1569	ABUTMENT NO. 9
1570-1571	INTERIOR BENT NO. 2
1572-1573	INTERIOR BENT NO. 3
1574-1575	INTERIOR BENT NO. 4
1576-1580	INTERIOR BENT NO. 5
1581-1582	INTERIOR BENT NO. 6
1583-1584	INTERIOR BENT NO. 7
1585-1586	INTERIOR BENT NO. 8
1587-1588	GIRDER LAYOUT
1589-1594	353.00' PLATE GIRDER UNIT
1595-1596	348.00' PRESTR. CONCRETE I-GIRDER UNIT
1597-1598	354.00' PRESTR. CONCRETE I-GIRDER UNIT
1599	BRIDGE DRAIN DETAILS
1600-1603	BRIDGE LAYOUT - NB IH35W EXIT RAMP FROM MANAGED LANES
1604	EST. QUANTITIES AND BEARING SEAT ELEV.
1605-1606	FOUNDATION LAYOUT
1607	FOOTING DETAILS - BENTS 2-4, 9-10
1608	FOOTING DETAILS - BENTS 5, 6 & 8
1609	FOOTING DETAILS - BENT 7
1610	ABUTMENT NO. 1
1611	ABUTMENT NO. 11
1612-1613	INTERIOR BENTS NO. 2 - 4
1614-1615	INTERIOR BENT NO. 5
1616-1617	INTERIOR BENT NO. 6
1618-1622	INTERIOR BENT NO. 7
1623-1624	INTERIOR BENT NO. 8
1625-1626	INTERIOR BENT NO. 9
1627-1628	INTERIOR BENT NO. 10
1629-1630	GIRDER LAYOUT
1631-1637	564.00' PLATE GIRDER UNIT
1638-1639	472.00' PRESTRESSED CONCRETE I-GIRDER UNIT
1640-1641	354.00' PRESTRESSED CONCRETE I-GIRDER UNIT
1642-1644	BRIDGE DRAIN DETAILS
1645	AS-BUILT BRIDGE LAYOUT - RAMP D OVER RAMP C
1646	ESTIMATED QUANTITIES
1647	AS-BUILT ABUTMENT
1648	AS-BUILT BRIDGE LAYOUT - RAMP A OVER RAMP B
1649	ESTIMATED QUANTITIES
1650	AS-BUILT ABUTMENT
1651	BRIDGE LAYOUT - NB FRONTAGE RD - OVER BIG FOSSIL CK
1652	PHASING DETAILS
1653	FOUNDATION LAYOUT
1654	EST. QUANTITIES AND BEARING SEAT ELEV.
1655-1656	ABUTMENT NO. 1
1657-1658	ABUTMENT NO. 4

STATE OF TEXAS
KURT W. AUNGST
90848
LICENSED
PROFESSIONAL ENGINEER

* THE STANDARD SHEETS SPECIFICALLY IDENTIFIED ABOVE HAVE BEEN SELECTED BY ME OR UNDER MY RESPONSIBLE SUPERVISION AS BEING APPLICABLE TO THIS PROJECT.

KURT W. AUNGST, P.E. , P.E. 7/13/12 DATE

STATE OF TEXAS
M. N. MOZAFFAR
85191
LICENSED
PROFESSIONAL ENGINEER

** THE STANDARD SHEETS SPECIFICALLY IDENTIFIED ABOVE HAVE BEEN SELECTED BY ME OR UNDER MY RESPONSIBLE SUPERVISION AS BEING APPLICABLE TO THIS PROJECT.

M. N. MOZAFFAR, P.E. , P.E. 7/13/12 DATE

KCI KENNEDY CONSULTING
TBPE REGISTRATION NO. F-926

I. S. ENGINEERS, LLC
TBPE REG. # F-11657

Texas Department of Transportation
© 2012

IH 35W FROM NORTH TARRANT PKWY TO IH 820

INDEX OF SHEETS

SHEET 3 OF 5

DESIGN	FED.RD. DIV.NO.	FEDERAL AID PROJECT NO.		HIGHWAY NO.
KCI	6	(SEE TITLE SHEET)		IH 35W
GRAPHICS	STATE	DISTRICT	COUNTY	SHEET NO.
KCI	TEXAS	FTW	TARRANT	1396
CHECK	CONTROL	SECTION	JOB	
KCI	0014	16	255, ETC.	
CHECK				

DRAWING DATE: 7/13/2012 FILENAME: S3BINDEX53.dgn

SHEET NO.	DESCRIPTION
	VOLUME V (CONT'D)
	VII. BRIDGES
1659-1660	INTERIOR BENT NO. 2 & 3
1661	GIRDER LAYOUT (SPANS 1 - 3)
1662-1663	209.50' PRESTRESSED CONCRETE I-GIRDER UNIT
1664	BRIDGE LAYOUT - SB FRONTAGE RD - OVER BIG FOSSIL CK
1665	PHASING DETAILS
1666	FOUNDATION LAYOUT
1667	EST. QUANTITIES AND BEARING SEAT ELEV.
1668-1669	ABUTMENT NO. 1
1670-1671	ABUTMENT NO. 4
1672-1673	INTERIOR BENT NO. 2
1674-1675	INTERIOR BENT NO. 3
1676	GIRDER LAYOUT (SPANS 1 - 3)
1677-1678	211.50' PRESTRESSED CONCRETE I-GIRDER UNIT
1679	BRIDGE LAYOUT - NB IH 35W - OVER BIG FOSSIL CK
1680-1681	PHASING DETAILS
1682-1683	AS-BUILT - BRIDGE LAYOUT - BIG FOSSIL CREEK BRIDGE - NORTHBOUND
1684	FOUNDATION LAYOUT
1685	EST. QUANTITIES AND BEARING SEAT ELEV.
1686-1688	ABUTMENT NO. 1
1689-1691	ABUTMENT NO. 4
1692-1694	INTERIOR BENT NO. 2 AND 3
1695	GIRDER LAYOUT SPANS 1 - 3
1696-1698	213.15' PRESTRESSED CONCRETE I-GIRDER UNIT
1699-1700	APPROACH SLAB DETAILS
1701	BRIDGE LAYOUT - SB IH 35W - OVER BIG FOSSIL CK
1702-1703	PHASING DETAILS
1704-1705	AS-BUILT - BRIDGE LAYOUT - BIG FOSSIL CREEK BRIDGE - SOUTHBOUND
1706	FOUNDATION LAYOUT
1707	EST. QUANTITIES AND BEARING SEAT ELEV.
1708-1709	ABUTMENT NO. 1
1710-1711	ABUTMENT NO. 4
1712	INTERIOR BENT NO. 2
1713	INTERIOR BENT NO. 3
1714	GIRDER LAYOUT (SPANS 1 - 3)
1715-1716	213.15' PRESTRESSED CONCRETE I-GIRDER UNIT
1717-1718	APPROACH SLAB DETAILS
1719	BRIDGE LAYOUT - SB IH35W ENTR RAMP TO GP - OVER BIG FOSSIL CREEK
1720	BRIDGE TYPICAL SECTION
1721	EST. QUANTITIES AND BEARING SEAT ELEV.
1722	FOUNDATION LAYOUT
1723	ABUTMENT NO. 1
1724	ABUTMENT NO. 4
1725	MISCELLANEOUS ABUTMENT DETAILS
1726	INTERIOR BENTS NO. 2 & 3
1727	GIRDER LAYOUT (SPANS 1 - 3)
1728-1729	218.65' PRESTRESSED CONCRETE I-GIRDER UNIT
1730	BRIDGE LAYOUT - NB IH35W EXIT RAMP FROM GP - OVER BIG FOSSIL CREEK
1731	BRIDGE TYPICAL SECTION
1732	EST. QUANTITIES AND BEARING SEAT ELEV.
1733	FOUNDATION LAYOUT
1734	ABUTMENT NO. 1
1735	ABUTMENT NO. 4
1736	MISCELLANEOUS ABUTMENT DETAILS
1737	INTERIOR BENTS NO. 2 & 3
1738	GIRDER LAYOUT (SPANS 1 - 3)
1739-1740	246.90' PRESTRESSED CONCRETE I-GIRDER UNIT
1741	BRIDGE LAYOUT - NB IH 35W GP, ML AND EX R - OVER WESTERN CENTER BLVD
1742	PHASING DETAILS
1743	AS-BUILT BRIDGE LAYOUT
1744	AS-BUILT BRIDGE LAYOUT TYP SECTION
1745	FOUNDATION LAYOUT
1746-1747	ABUTMENT 1 DETAILS
1748-1749	ABUTMENT 4 DETAILS
1750	INTERIOR BENT NO. 2
1751	INTERIOR BENT NO. 3
1752	GIRDER LAYOUT
1753-1754	267.30' PRESTRESSED CONCRETE I-GIRDER UNIT
1755-1756	ABUTMENT 1 DETAILS
1757-1758	ABUTMENT 4 DETAILS
1759	INTERIOR BENT NO. 2
1760	INTERIOR BENT NO. 3
1761	GIRDER LAYOUT
1762-1763	267.30' PRESTRESSED CONCRETE I-GIRDER UNIT
1764	BRIDGE LAYOUT - SB IH 35W GP, ML AND ENT R - OVER WESTERN CENTER BLVD
1765	PHASING DETAILS
1766	AS-BUILT BRIDGE LAYOUT
1767	AS-BUILT BRIDGE LAYOUT TYP SECTION
1768	FOUNDATION LAYOUT
1769-1770	ABUTMENT 1 DETAILS
1771-1772	ABUTMENT 4 DETAILS

SHEET NO.	DESCRIPTION
	VOLUME V (CONT'D)
	VII. BRIDGES
1773	INTERIOR BENT NO. 2
1774	INTERIOR BENT NO. 3
1775	GIRDER LAYOUT
1776-1777	267.30' PRESTRESSED CONCRETE I-GIRDER UNIT
1778	ESTIMATED QUANTITIES
	STANDARDS
1779	**BAS-A
1780	**BAS-C
1781-1782	**BMCS
1783-1784	**BRSM
1785-1786	**BRSM (MOD)
1787	**BS-EJCP
1788-1790	**C221
1791-1794	**C402 (MOD)
1795	**CRR
1796	**BAT-CTFB-08(FW)
1797	**CSB(3)-10
1798-1799	**FD
1800-1801	**IGD
1802-1804	**IGEB
1805-1807	**IGEB (MOD)
1808	**IGMS
1809-1814	**IGND
1815	**IGTS
1816	**MEBR(C)
1817	**MEBR(S)
1818-1821	**PCP
1822	**PCP-FAB
1823-1824	**PMDF
1825	**SBMS
1826	**SBTS
1827-1828	**SEJ-A
1829-1831	**SGEB
1832-1834	**SGMD
1835-1836	**SSCB(2)-10
1837-1838	**SSTR
1839-1841	**T401

SHEET NO.	DESCRIPTION
	VOLUME VI
	VIII. TRAFFIC ITEMS
1842	TITLE SHEET
1843-1847	INDEX OF SHEETS
1848	TRAFFIC SIGNAL PLANS - EXISTING CONDITIONS LAYOUT - SBFR AT BASSWOOD BLVD
1849	TRAFFIC SIGNAL PLANS - PROPOSED INTERSECTION LAYOUT
1850	TRAFFIC SIGNAL PLANS - SUMMARY CHARTS
1851	TRAFFIC SIGNAL PLANS - TERMINATION & PHASING
1852	TRAFFIC SIGNAL PLANS - SIGNS LAYOUT
1853	EXISTING CONDITIONS TRAFFIC SIGNAL LAYOUT - NBFR AT BASSWOOD BLVD
1854	TRAFFIC SIGNAL PLANS - PROPOSED INTERSECTION LAYOUT
1855	TRAFFIC SIGNAL PLANS - SUMMARY CHARTS
1856	TRAFFIC SIGNAL PLANS - TERMINATION & PHASING
1857	TRAFFIC SIGNAL PLANS - SIGNS LAYOUT
1858	EXISTING CONDITIONS TRAFFIC SIGNAL LAYOUT - SBFR AT WESTERN CENTER BLVD
1859	TRAFFIC SIGNAL PLANS - TEMPORARY INTERSECTION LAYOUT
1860	TRAFFIC SIGNAL PLANS - TEMP SIGNAL SUMMARY CHARTS
1861	TRAFFIC SIGNAL PLANS - TEMP SIGNAL TERMINATION & PHASING
1862	TRAFFIC SIGNAL PLANS - TEMP SIGNAL SIGN LAYOUT
1863	TRAFFIC SIGNAL PLANS - PROPOSED INTERSECTION LAYOUT
1864	TRAFFIC SIGNAL PLANS - SUMMARY CHARTS
1865	TRAFFIC SIGNAL PLANS - TERMINATION & PHASING
1866	TRAFFIC SIGNAL PLANS - SIGNS LAYOUT
1867	TRAFFIC SIGNAL PLANS - EXISTING CONDITIONS LAYOUT - NBFR AT WESTERN CENTER BLVD
1868	TRAFFIC SIGNAL PLANS - TEMPORARY INTERSECTION LAYOUT
1869	TRAFFIC SIGNAL PLANS - TEMP SIGNAL SUMMARY CHARTS
1870	TRAFFIC SIGNAL PLANS - TEMP SIGNAL TERMINATION & PHASING
1871	TRAFFIC SIGNAL PLANS - TEMP SIGNAL SIGNS LAYOUT
1872	TRAFFIC SIGNAL PLANS - PROPOSED INTERSECTION LAYOUT
1873	TRAFFIC SIGNAL PLANS - SUMMARY CHARTS

SHEET NO.	DESCRIPTION
	VOLUME VI (CONT'D)
	VIII. TRAFFIC ITEMS
1874	TRAFFIC SIGNAL PLANS - TERMINATION & PHASING
1875	TRAFFIC SIGNAL PLANS - SIGNS LAYOUT
1876	CITY OF FORT WORTH - FIGURE 4 MOVEMENT DIAGRAM
1877	TRAFFIC SIGNAL DETAILS - SIGNAL HEADS AND PED POLE DETAILS
	STANDARDS
1878-1879	**SMA-80(1)-12 AND SMA-80(2)-12
1880	**LUM-A-12
1881	**CFA-12
1882-1883	**MA-C-12 AND MA-D-12
1884	**MA-DPD-12
1885	**TS-FD-12
1886-1887	**VDZ(1)-05(FTW) AND VDZ(2)-05(FTW)
1888	**AS-GNBOX
1889-1890	**TEMPORARY SIGNAL TYPICAL DETAIL SHEET
1891	**TYPE 170 CABINET INSTALLATION DETAILS
1892-1915	ILLUMINATION PLAN
1916	LUMINAIRE SUMMARY
1917	UNDERPASS CONDUIT SUMMARY
1918-1919	CONDUIT SUMMARY
1920	GROUND BOX SUMMARY
1921	ELECTRICAL SERVICE SUMMARY
	STANDARDS
1922-1926	**ED(1)-03 THRU ED(5)-03
1927	**ED(6)-03(FTW)
1928-1929	**ED(7)-03 AND ED(8)-03
1930-1931	**RID(LUM1)-07 AND RID(LUM2)-07
1932	**RID(FND)-11
1933	**RID(UP)-07
1934	**RID(IF)-07
1935-1938	**RIP(1)-11 THRU RIP(4)-11
1939-1947	**HMID(1)-03 THRU HMID(9)-03
1948-1949	**HMIP(1)-98 AND HMIP(2)-98
1950-1951	**HMIF(1)-98 AND HMIF(2)-98

STATE OF TEXAS
KURT W. AUNGST
90848
LICENSED
PROFESSIONAL ENGINEER

* THE STANDARD SHEETS SPECIFICALLY IDENTIFIED ABOVE HAVE BEEN SELECTED BY ME OR UNDER MY RESPONSIBLE SUPERVISION AS BEING APPLICABLE TO THIS PROJECT.

KURT W. AUNGST, P.E. , P.E. 8/29/12 DATE

STATE OF TEXAS
M. N. MOZAFFAR
85191
LICENSED
PROFESSIONAL ENGINEER

** THE STANDARD SHEETS SPECIFICALLY IDENTIFIED ABOVE HAVE BEEN SELECTED BY ME OR UNDER MY RESPONSIBLE SUPERVISION AS BEING APPLICABLE TO THIS PROJECT.

M. N. MOZAFFAR, P.E. , P.E. 8/29/12 DATE

KENNEDY CONSULTING
TBPE REGISTRATION NO. F-926

I. S. ENGINEERS, LLC
TBPE REG. # F-11657

Texas Department of Transportation
© 2012

IH 35W FROM NORTH TARRANT PKWY TO IH 820

INDEX OF SHEETS

SHEET 4 OF 5

DESIGN	FED.RD. DIV.NO.	FEDERAL AID PROJECT NO.		HIGHWAY NO.
KCI	6	(SEE TITLE SHEET)		IH 35W
GRAPHICS KCI	STATE	DISTRICT	COUNTY	SHEET NO.
CHECK KCI	TEXAS	FTW	TARRANT	1397
CHECK KCI	CONTROL	SECTION	JOB	
	0014	16	255, ETC.	

DRAWING DATE: 8/28/2012 FILENAME: S3BINDEX54.dgn

SHEET NO.	DESCRIPTION

VOLUME VI (CONT'D)

VIII. TRAFFIC ITEMS

1952-1973	SIGN LAYOUTS
1974-2017	SIGN SUPPORT LAYOUTS
2018-2028	LARGE GUIDE SIGN DETAILS
2029-2030	SMALL SIGN DETAILS
2031	LARGE SIGNS SCHEDULE & QUANTITIES

STANDARDS

2032	*WV&IZ-96
2033-2034	*OSB-Z4I
2035-2036	*HOSB-Z4I
2037	*OSBC
2038-2039	*OSBT
2040	*OSB-FD
2041	*OSB-FD-SC
2042	*HCOSS-Z1-10
2043	*COSS AND OSB-SZ
2044	*COSS-Z3 AND Z3I-10
2045	*COSS-Z4 AND Z4I-10
2046-2047	*COSSD
2048	*COSSF
2049	*COSS-FD
2050	*SMD(GEN)-08
2051-2053	*SMD(SLIP-1)-08 THRU SMD(SLIP-3)-08
2054	*SMD(TWT)-08
2055	*SMD(FRP)-08
2056	*SMD(TY G)-08
2057-2060	*SMD(2-1)-08 THRU SMD(2-4)-08
2061	*SMD(2-6)-01
2062-2063	*SMD(8W1)-08 AND SMD(8W2)-08
2064-2068	*TSR(1)-08 THRU TSR(5)-08
2069-2092	PAVEMENT MARKINGS & DELINEATION

STANDARDS

2093	*D&OM(1)-10
2094-2097	*D&OM(2)-04 THRU D&OM(5)-04
2098	*D&OM(VIA)-04
2099-2102	*FPM(1)-12 THRU FPM(4)-12
2103-2106	*PM(1)-12 THRU PM(4)-12
2107	*BLPM-10
2108	*WZ(DERD)-03
2109-2133	ITS PLAN
2134	OMIT
2135-2137	ITS PLAN
2138	ITS DETAIL SHEET - CCTV COVERAGE MAP
2139-2162, 2162A, 2163-2167, 2167A, 2168-2176	ITS ELEVATION CROSS SECTIONS
2177-2189	ITS DETAIL SHEET
2190	TOLL LAYOUT - PROJECT SATELLITE BUILDING
2190A	CLF-10 (MOD)
2191-2194	ITS DETAIL SHEET
2195	TOLL LAYOUT - RAMP 35EX-MLS
2196-2198	TOLLING DETAILS
2199	TOLL LAYOUT - DC 287E-MLS
2200-2202	TOLLING DETAILS
2203	TOLL LAYOUT - RAMP BB-MLS
2204-2206	TOLLING DETAILS
2207	TOLL LAYOUT - MAINLANE
2208-2211	TOLLING DETAILS

IX. EROSION CONTROL

2212-2213	EPIC
2214	STORM WATER POLLUTION PREVENTION PLAN (SW3P)
2215-2237	EROSION CONTROL PLAN

STANDARDS

2238-2240	**EC(1)-09 THRU EC(3)-09

FILENAME: S3BINDEX55.dgn

DRAWING DATE: 8/28/2012

STATE OF TEXAS
KURT W. AUNGST
90848
LICENSED
PROFESSIONAL ENGINEER

* THE STANDARD SHEETS SPECIFICALLY IDENTIFIED ABOVE HAVE BEEN SELECTED BY ME OR UNDER MY RESPONSIBLE SUPERVISION AS BEING APPLICABLE TO THIS PROJECT.

KURT W. AUNGST, P.E. , P.E. 8/29/12 DATE

STATE OF TEXAS
M. N. MOZAFFAR
85191
LICENSED
PROFESSIONAL ENGINEER

** THE STANDARD SHEETS SPECIFICALLY IDENTIFIED ABOVE HAVE BEEN SELECTED BY ME OR UNDER MY RESPONSIBLE SUPERVISION AS BEING APPLICABLE TO THIS PROJECT.

M. N. MOZAFFAR, P.E. , P.E. 8/29/12 DATE

KENNEDY CONSULTING
TBPE REGISTRATION NO. F-926

I. S. ENGINEERS, LLC
TBPE REG. # F-11657

Texas Department of Transportation
© 2012

IH 35W FROM NORTH TARRANT PKWY TO IH 820

INDEX OF SHEETS

SHEET 5 OF 5

DESIGN	FED.RD. DIV.NO.	FEDERAL AID PROJECT NO.		HIGHWAY NO.
KCI	6	(SEE TITLE SHEET)		IH 35W
GRAPHICS	STATE	DISTRICT	COUNTY	SHEET NO.
KCI	TEXAS	FTW	TARRANT	
CHECK	CONTROL	SECTION	JOB	1398
KCI	0014	16	255, ETC.	

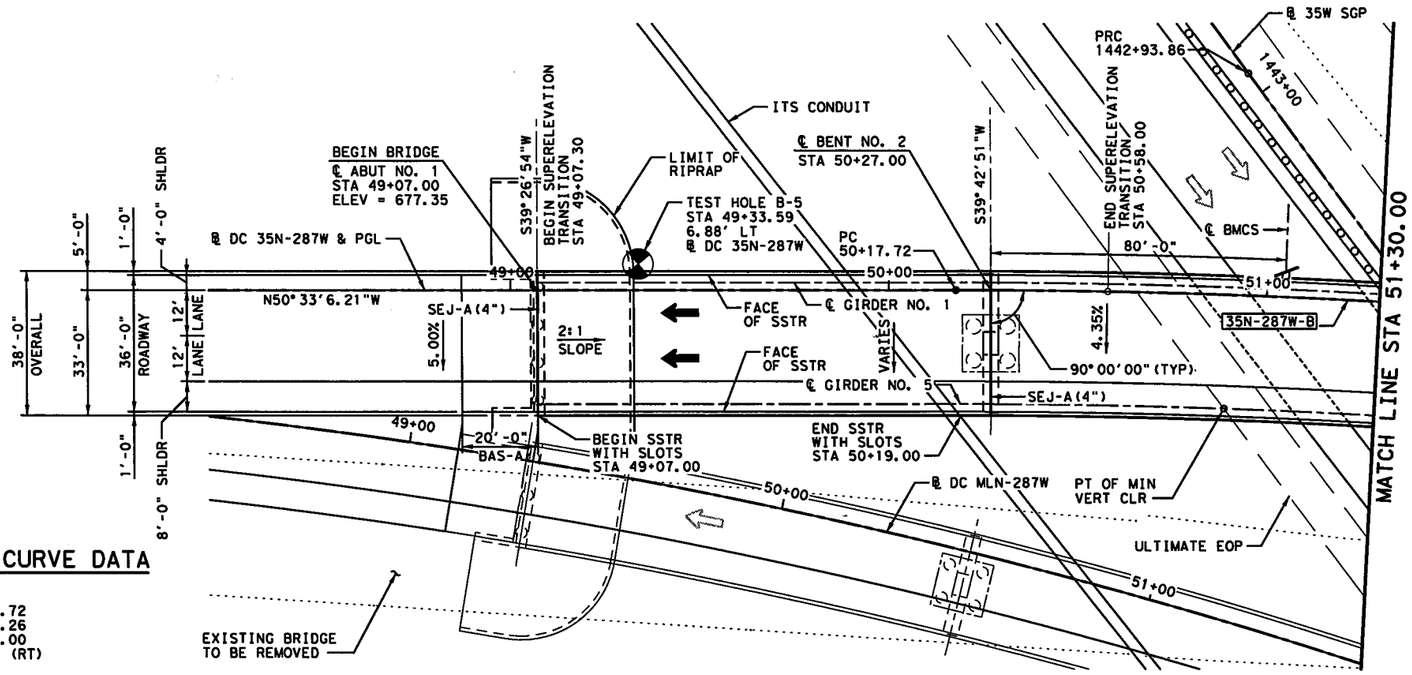

PLAN

0' 10' 20' 40'

SCALE IN FEET

GENERAL NOTES:

1. DESIGNED ACCORDING TO AASHTO LRFD BRIDGE DESIGN SPECIFICATIONS, 5TH EDITION (2010).
2. ALL DIMENSIONS ARE EITHER HORIZONTAL OR VERTICAL AND MUST BE CORRECTED FOR GRADE, CROWN, AND/OR SUPERELEVATION.
3. FOR CONCRETE GIRDER UNITS, "D"DENOTES BENTS WITH DOWEL BARS "D"AND SLOTTED HOLES AT THE ENDS OF EXTERIOR GIRDERS ONLY.
4. FOR STEEL GIRDER UNITS, BEAM END CONDITIONS ARE DENOTED AS FOLLOWS:
   (F) FIXED BEARING
   (E) EXPANSION BEARING
   (ES) EXPANSION BEARING (SLIDING)
5. SEE "BORING LOGS - BRIDGE" SHEETS FOR GEOTECHNICAL INFORMATION.
6. CONTRACTOR TO VERIFY LOCATION OF ALL UTILITIES PRIOR TO EXCAVATION.
7. THE "H" VALUES SHOWN ARE ESTIMATED COLUMN HEIGHTS. CONTRACTOR IS RESPONSIBLE FOR CALCULATING ACTUAL COLUMN HEIGHTS BASED ON FIELD CONDITIONS.
8. SIDE SLOT DRAINS FOR SSTR RAIL SHALL NOT BE LOCATED WITHIN 6' OF ℄ BENT OR ABUTMENT.
9. ALLOWANCE FOR FUTURE RESURFACING: 23.3 PSF.

EXIST NBI NUMBER: 02-220-0-0081-12-309
NEW NBI NUMBER: 02-220-0-0014-16-544
FUNCTIONAL CLASSIFICATION: URBAN FREEWAY
DESIGN SPEED: 45 MPH
ADT: 28,300 (2030)

HORIZONTAL CURVE DATA

35N-287W-B

PC STATION = 50+17.72
PI STATION = 63+83.26
PT STATION = 74+14.00
Δ = 68° 38' 53.95" (RT)
D = 2° 51' 53.24"
T = 1,365.54'
L = 2,396.28'
R = 2,000.00'

HL 93 LOADING

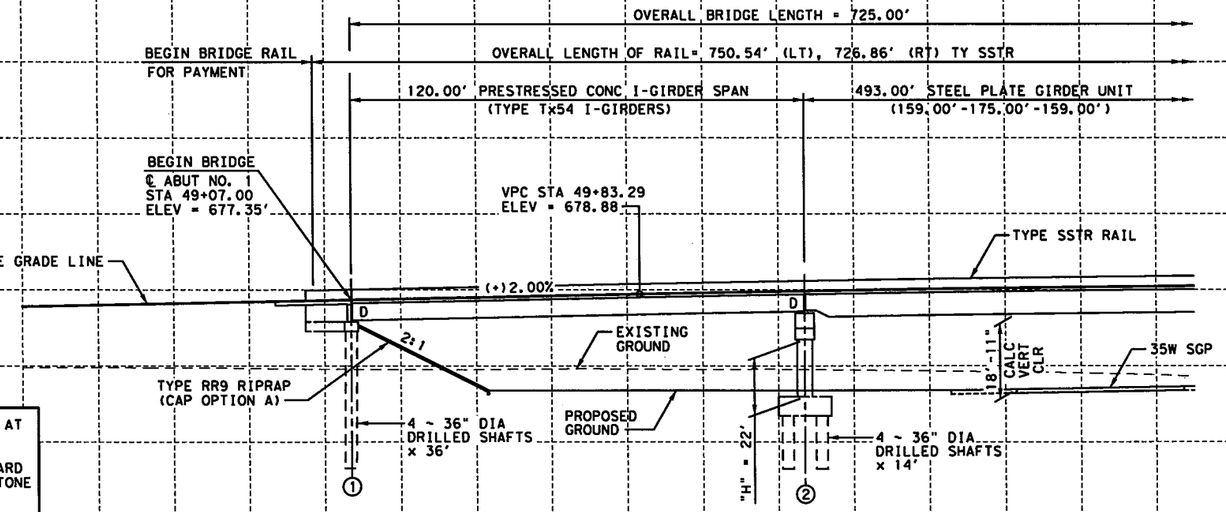

ELEVATION

DRILLED SHAFTS SHALL BE FOUNDED AT THE LENGTHS SHOWN OR DEEPER AS NECESSARY TO OBTAIN A MINIMUM PENETRATION INTO HARD TO VERY HARD GRAY LIMESTONE AND SHALEY LIMESTONE THE FOLLOWING DISTANCES:
- ABUTS NO. 1 AND 6 - 7.5'
- BENT NO. 2 - 11'
- BENT NO. 3 - 19'
- BENT NO. 4 - 15'
- BENT NO. 5 - 13'

STATE OF TEXAS
NESTOR R. RUBIANO
94294
LICENSED PROFESSIONAL ENGINEER
7/06/2012

PESC P.E. Structural Consultants, Inc.
www.PEStructural.com
TBPE Firm No. F-1475

Texas Department of Transportation
© 2012

IH 35W FROM NORTH TARRANT PKWY TO IH 820

BRIDGE LAYOUT

NB IH 35W TO WB US 287

SCALE: 1"=40' SHEET 1 OF 3

DESIGN	FED. RD. DIV. NO.	FEDERAL AID PROJECT NO.		HIGHWAY NO.
AEB	6	(SEE TITLE SHEET)		IH 35W
GRAPHICS	STATE	DISTRICT	COUNTY	SHEET NO.
TLS	TEXAS	FTW	TARRANT	
CHECK	CONTROL	SECTION	JOB	1399
NRR	0014	16	255, ETC.	
CHECK				
AB				

FILENAME: S3BBR*35N-287W*BL*01.dgn
DRAWING DATE: 7/13/2012

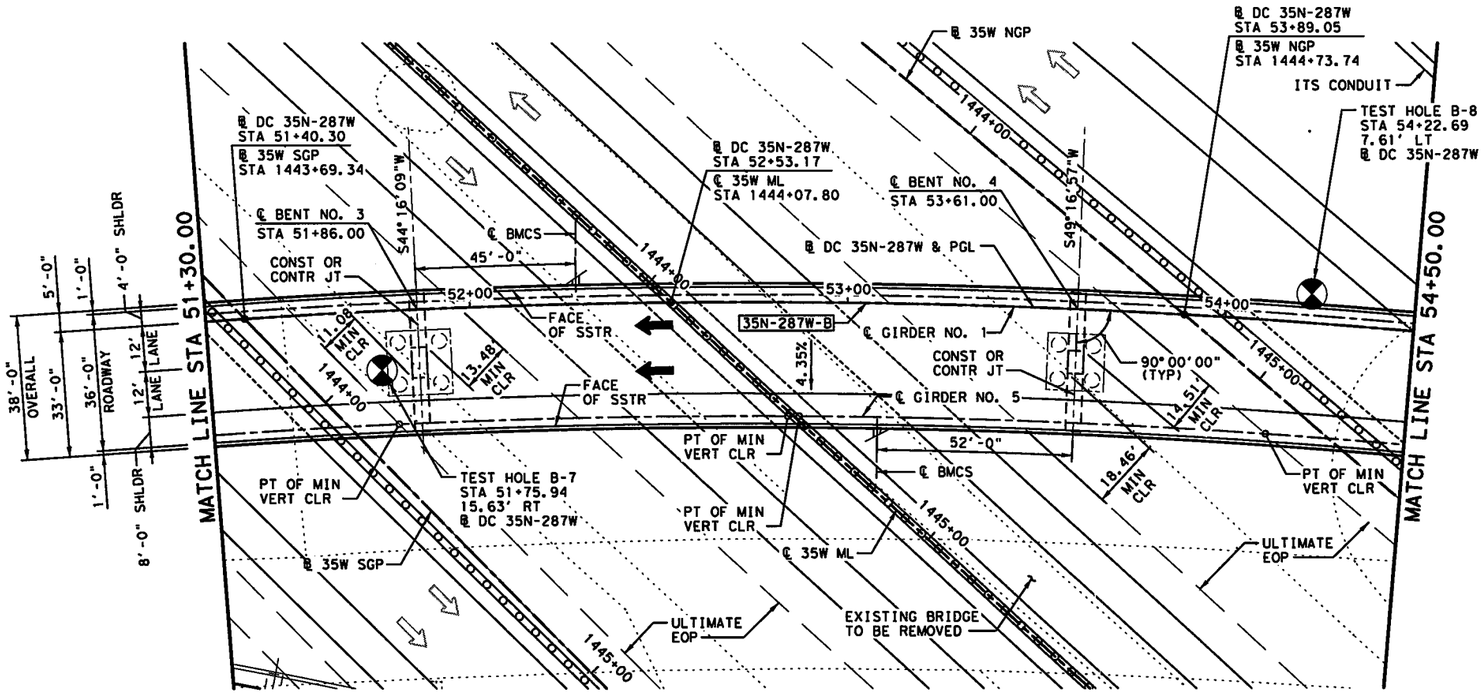

PLAN

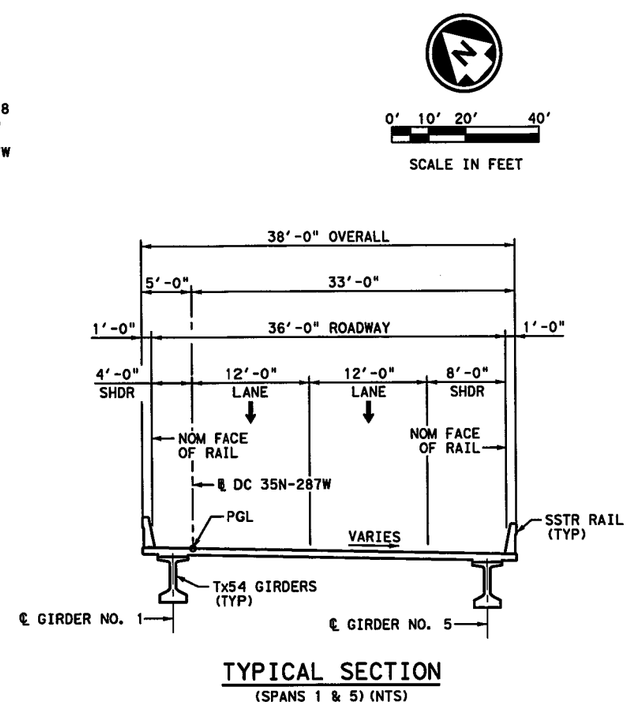

TYPICAL SECTION

(SPANS 1 & 5) (NTS)

HL 93 LOADING

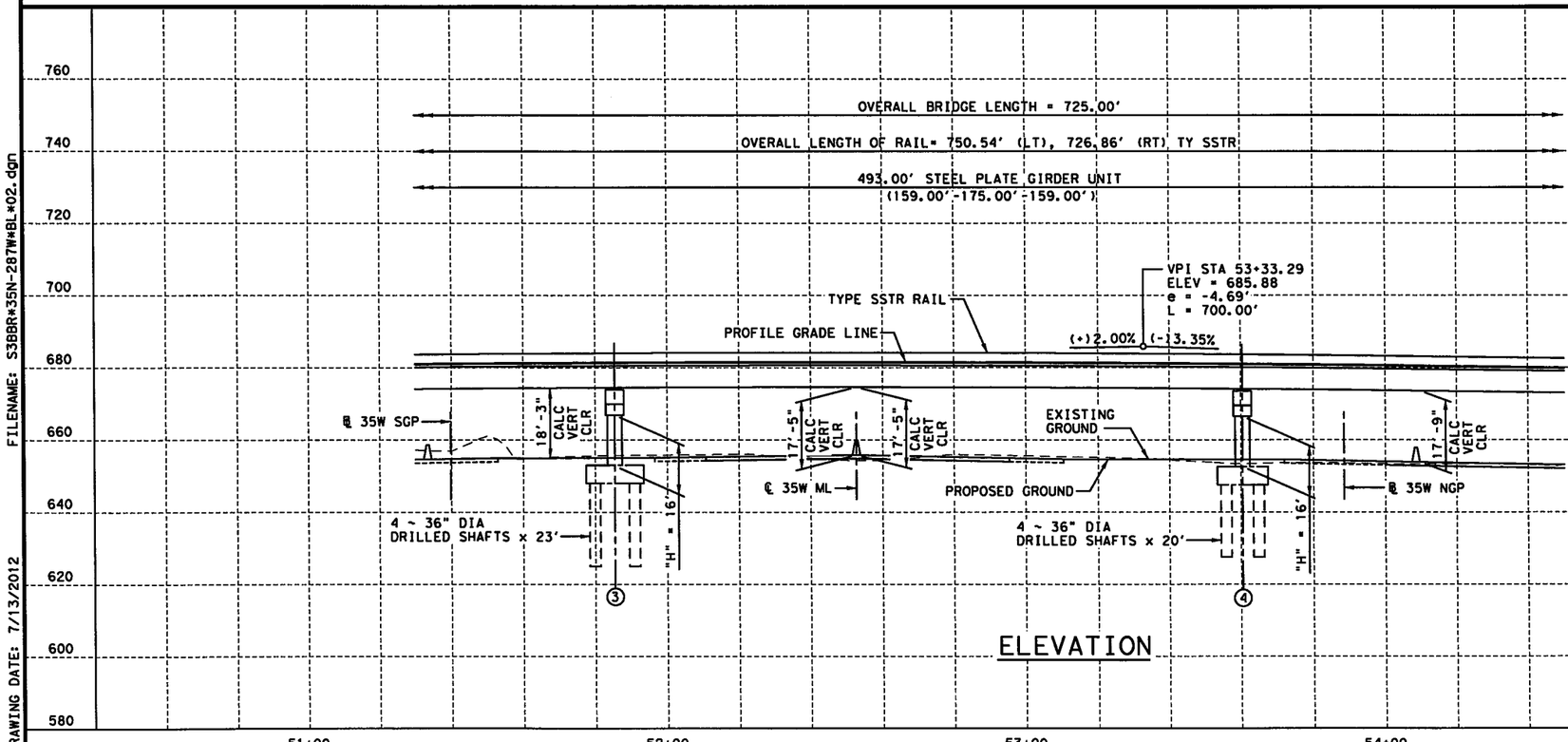

ELEVATION

STATE OF TEXAS
NESTOR R. RUBIANO
94294
LICENSED
PROFESSIONAL ENGINEER
7/06/2012

P.E. Structural Consultants, Inc.
www.PEStructural.com
TBPE Firm No. F-1475

Texas Department of Transportation
© 2012

IH 35W FROM NORTH TARRANT PKWY TO IH 820

BRIDGE LAYOUT

NB IH 35W TO WB US 287

SCALE: 1"=40'

SHEET 2 OF 3

DESIGN	FED.RD. DIV.NO.	FEDERAL AID PROJECT NO.		HIGHWAY NO.
AEB	6	(SEE TITLE SHEET)		IH 35W
GRAPHICS TLS	STATE	DISTRICT	COUNTY	SHEET NO.
CHECK NRR	TEXAS	FTW	TARRANT	1400
CHECK AB	CONTROL	SECTION	JOB	
	0014	16	255, ETC.	

FILENAME: S3BBR#35N-287W#BL#02.dgn
DRAWING DATE: 7/13/2012

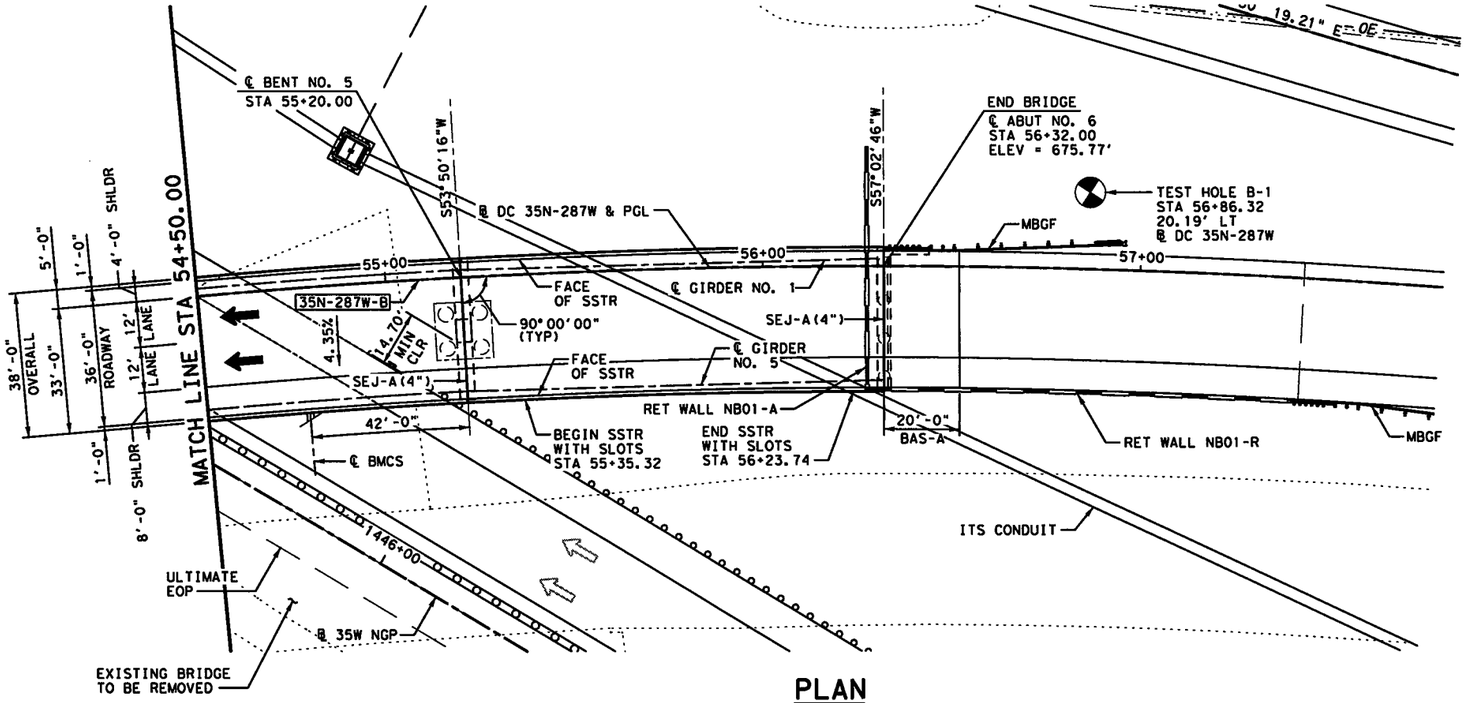

PLAN

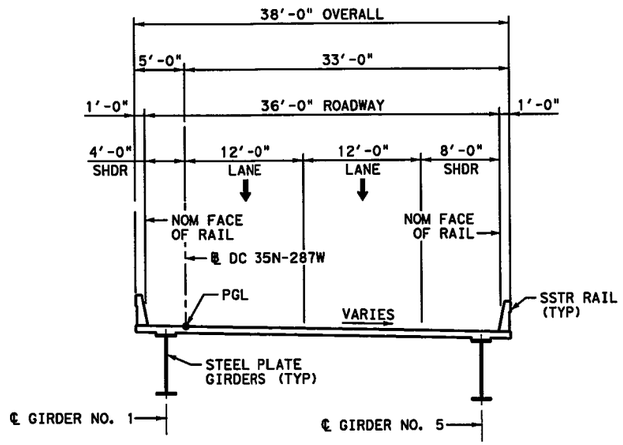

TYPICAL SECTION
(SPANS 2-4) (NTS)

HL 93 LOADING

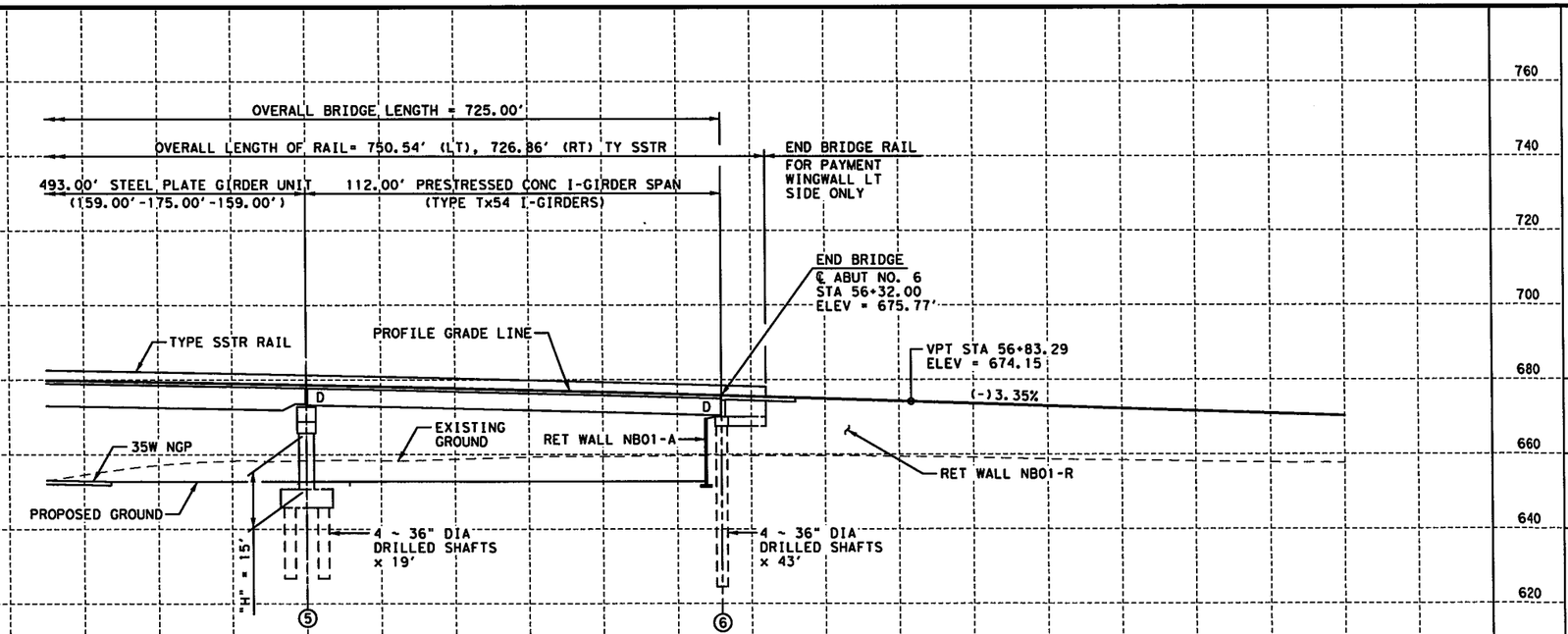

ELEVATION

FILENAME: S3BBR*35N-287W*BL*03.dgn
DRAWING DATE: 7/13/2012

STATE OF TEXAS
NESTOR R. RUBIANO
94294
LICENSED
PROFESSIONAL ENGINEER
7/06/2012

P.E. Structural Consultants, Inc.
www.PEStructural.com
TBPE Firm No. F-1475

Texas Department of Transportation
© 2012

IH 35W FROM NORTH TARRANT PKWY TO IH 820

BRIDGE LAYOUT

NB IH 35W TO WB US 287

SCALE: 1"=40' SHEET 3 OF 3

DESIGN	FED.RD. DIV.NO.	FEDERAL AID PROJECT NO.		HIGHWAY NO.
AEB	6	(SEE TITLE SHEET)		IH 35W
GRAPHICS	STATE	DISTRICT	COUNTY	SHEET NO.
TLS	TEXAS	FTW	TARRANT	1401
CHECK	CONTROL	SECTION	JOB	
NRR	0014	16	255, ETC.	
CHECK				
AB				

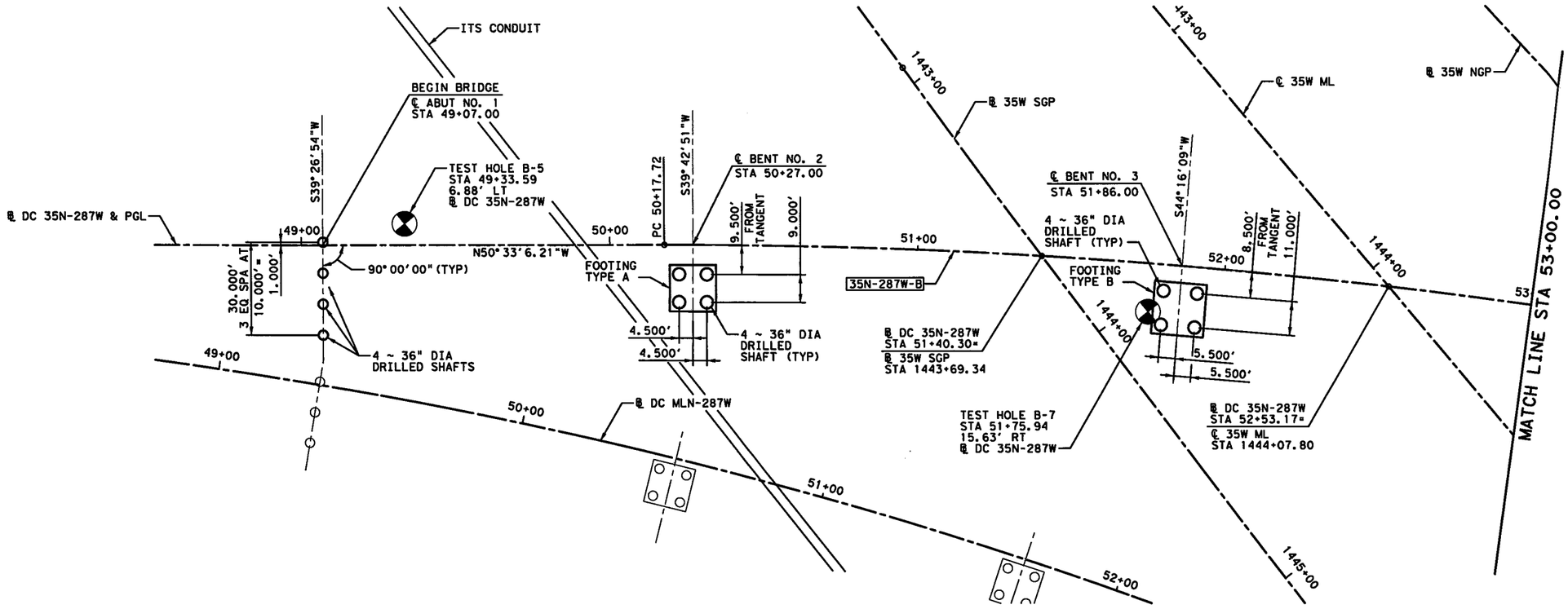

PLAN

GENERAL NOTES:

1. FOR ANY TEMPORARY SHORING REQUIRED AT INTERIOR BENT LOCATIONS, FOLLOW TXDOT STANDARD SPECIFICATION ITEM 403.
2. SEE "BORING LOGS - BRIDGE" SHEETS FOR GEOTECHNICAL INFORMATION.
3. ⌖ DENOTES TEST HOLE LOCATION.
4. CONTRACTOR TO VERIFY LOCATION OF ALL UTILITIES PRIOR TO EXCAVATION.

HORIZONTAL CURVE DATA

35N-287W-B

PC STATION = 50+17.72
PI STATION = 63+83.26
PT STATION = 74+14.00
Δ = 68° 38' 53.95" (RT)
D = 2° 51' 53.24"
T = 1,365.54'
L = 2,396.28'
R = 2,000.00'

HL 93 LOADING

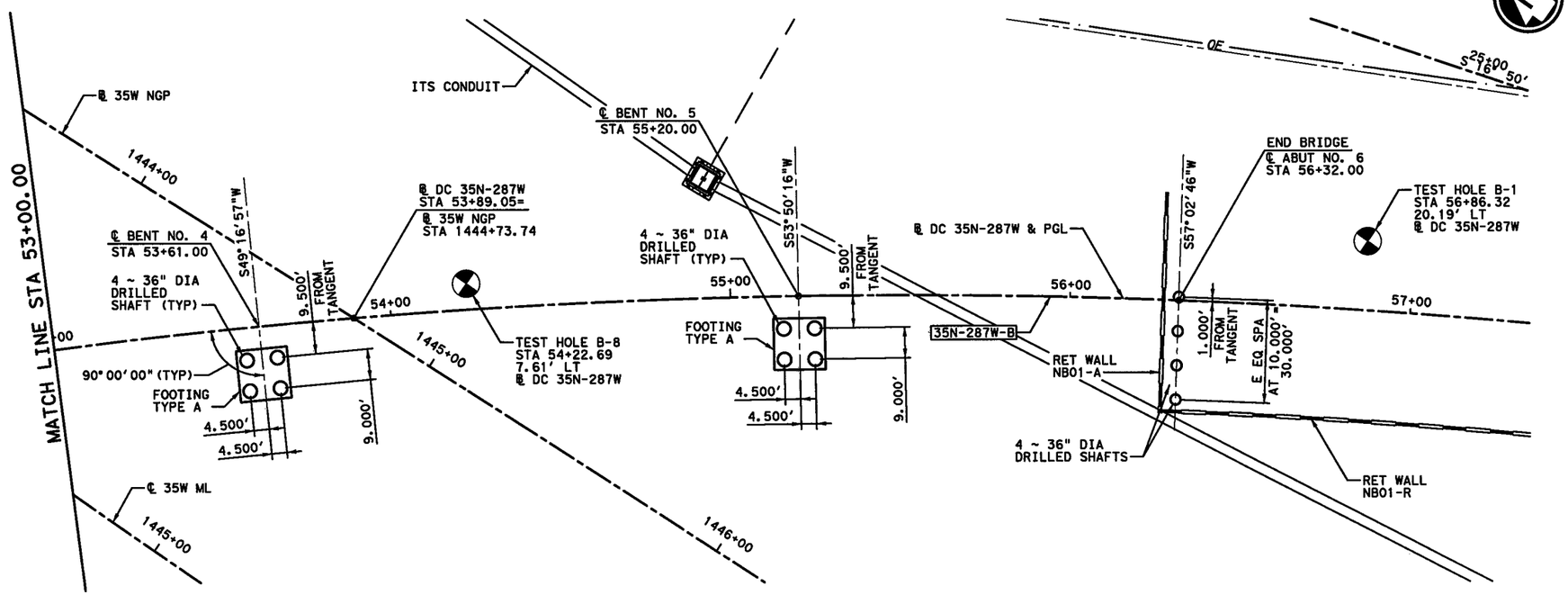

PLAN

STATE OF TEXAS
NESTOR R. RUBIANO
94294
LICENSED
PROFESSIONAL ENGINEER
7/06/2012

PESC
P.E. Structural Consultants, Inc.
www.PEStructural.com
TBPE Firm No. F-1475

Texas Department of Transportation
© 2012

IH 35W FROM NORTH TARRANT PKWY TO IH 820

FOUNDATION LAYOUT
NB IH 35W TO WB US 287

SCALE: 1"=40' SHEET 1 OF 1

DESIGN	FED.RD. DIV.NO.	FEDERAL AID PROJECT NO.		HIGHWAY NO.
AEB	6	(SEE TITLE SHEET)		IH 35W
GRAPHICS	STATE	DISTRICT	COUNTY	SHEET NO.
TLS	TEXAS	FTW	TARRANT	1402
CHECK NRR	CONTROL	SECTION	JOB	
CHECK AB	0014	16	255, ETC.	

FILENAME: S3BBR#35N-287W#FL#01.dgn
DRAWING DATE: 7/13/2012

SUMMARY OF ESTIMATED QUANTITIES

BID ITEM	403 2001	416 2004	420 2018	420 2041	420 2042	420 2256	420	422 2003	425 2068	428 2002	432 2001	434 2066
BID ITEM DESCRIPTION / BRIDGE ELEMENT	TEMPORARY SPL SHORING	DRILL SHAFT (36 IN)	CL C CONC (MASS PLACEMENT) (FOOTING)	CL C CONC (HPC) (ABUT)	CL C CONC (HPC) (BENT)	CL S CONC (HPC) (APPR SLAB)	CL F CONC (HPC) (MASS PLACEMENT) (BENT)	REINF CONC SLAB (HPC) (CL S)	PRESTR CONC GIRDER (TX54)	CONC SURF TREAT (CLASS II)	RIPRAP (CONC) (4 IN)	ELASTOMERIC BEAR (E5)
	SF	LF	CY	CY	CY	CY	CY	SF	LF	SY	CY	EA
2 - ABUTMENTS		316		50.9		58				211	46	
4 - INTERIOR BENTS	2,146	304	153.7		134.7		48.8			215		
1 - 120.000' PRESTRESSED CONCRETE I-GIRDER UNIT (SPAN 1)								4,558	597.30	556		
1 - 493.000' STEEL PLATE GIRDER UNIT (SPANS 2-4)								18,603		2,268		5
1 - 112.000' PRESTRESSED CONCRETE I-GIRDER UNIT (SPAN 5)								4,226	553.69	515		
TOTALS	2,146	620	153.7	50.9	134.7	58	48.8	27,387	1,150.99	3,765	46	5

SUMMARY OF ESTIMATED QUANTITIES

BID ITEM	434 2071	434 2077	442 2002	442 2048	450 2102	454 2001	636 2001
BID ITEM DESCRIPTION / BRIDGE ELEMENT	ELASTOMERIC BEAR (F5)	SLIDING ELASTOMERIC BEAR (ES4)	STR STL (PLATE GIRDER)	STRUCTURAL STEEL (MISC NON - BRIDGE)	RAIL (TYPE SSTR) (HPC)	SEALED EXPANSION JOINT (4 IN) (SEJ-A)	ALUMINUM SIGNS (TY A)
	EA	EA	LB	LB	LF	LF	SF
2 - ABUTMENTS					36.0	74	
4 - INTERIOR BENTS						74	
1 - 120.000' PRESTRESSED CONCRETE I-GIRDER UNIT (SPAN 1)					239.9		
1 - 493.000' STEEL PLATE GIRDER UNIT (SPANS 2-4)	5	10	915,500	888	979.1		56
1 - 112.000' PRESTRESSED CONCRETE I-GIRDER UNIT (SPAN 5)					222.4		
TOTALS	5	10	915,500	888	1,477.4	148	56

BEARING SEAT ELEVATIONS

		BEAM 1	BEAM 2	BEAM 3	BEAM 4	BEAM 5
BENT 1	(FWD)	671.702	671.302	670.902	670.502	670.103
BENT 2	(BK)	673.982	673.623	673.264	672.905	672.546
	(FWD)	673.957	673.599	673.241	672.882	672.524
BENT 3		673.500	673.152	672.825	672.477	672.129
BENT 4		673.119	672.771	672.443	672.095	671.747
BENT 5	(BK)	672.885	672.537	672.189	671.841	671.494
	(FWD)	672.920	672.572	672.224	671.876	671.528
BENT 6	(BK)	670.137	669.789	669.441	669.093	668.745

STATE OF TEXAS
NESTOR R. RUBIANO
94294
LICENSED
PROFESSIONAL ENGINEER

8/29/2012

HL 93 LOADING

PESC P.E. Structural Consultants, Inc.
www.PEStructural.com
TBPE Firm No. F-1475

Texas Department of Transportation
© 2012

IH 35W FROM NORTH TARRANT PKWY TO IH 820

EST. QUANTITIES AND BEARING SEAT ELEV.

NB IH 35W TO WB US 287

SCALE: NTS — SHEET 1 OF 1

DESIGN	FED.RD. DIV.NO.	FEDERAL AID PROJECT NO.		HIGHWAY NO.
AEB	6	(SEE TITLE SHEET)		IH 35W
GRAPHICS TLS	STATE	DISTRICT	COUNTY	SHEET NO.
CHECK NRR	TEXAS	FTW	TARRANT	1403
CHECK AB	CONTROL	SECTION	JOB	
	0014	16	255, ETC.	

DRAWING DATE: 7/13/2012 FILENAME: S3BBR*35N-287W*EQ*01.DGN

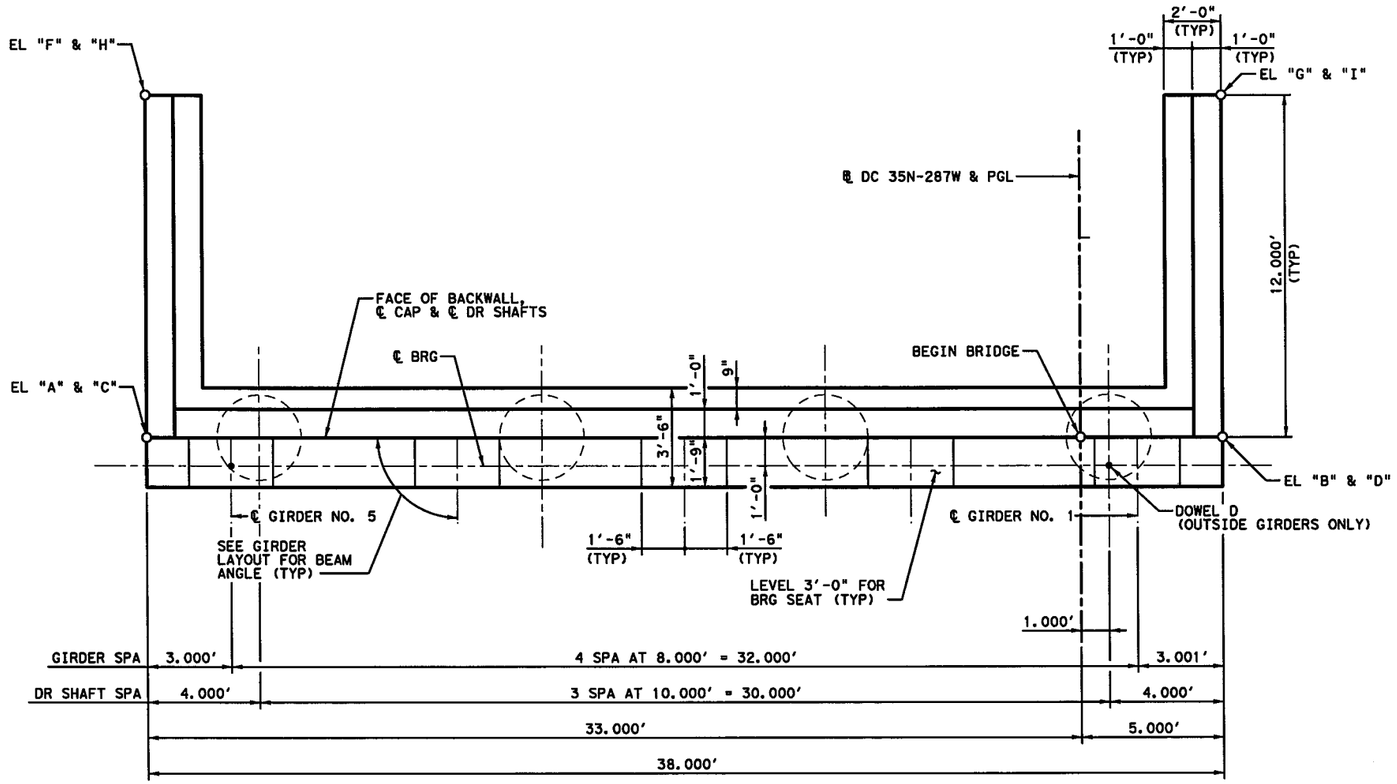

PLAN

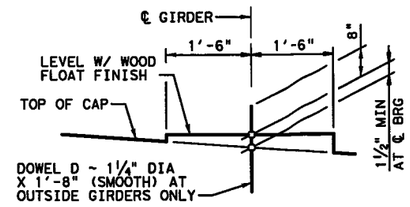

BEARING SEAT DETAIL

(BEARING SURFACE MUST BE CLEAN AND FREE OF ALL LOOSE MATERIAL BEFORE PLACING BEARING PAD.)

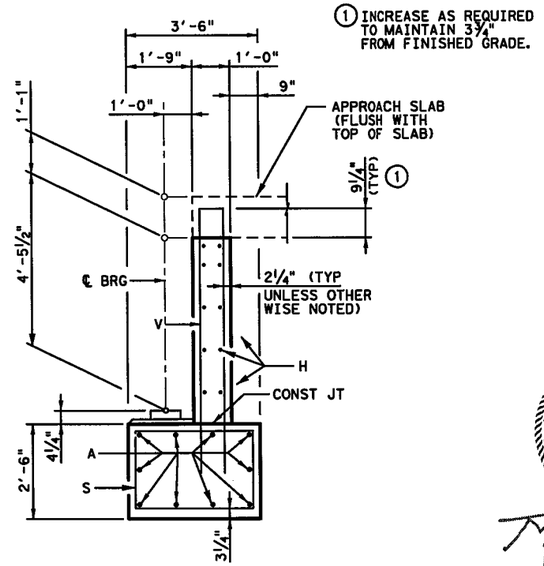

SECTION A-A

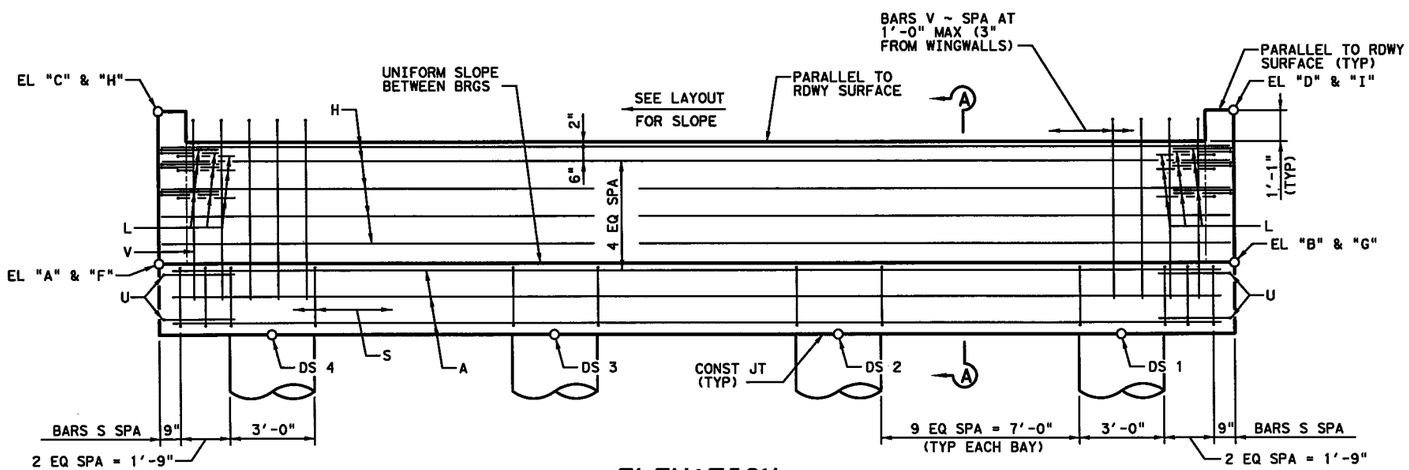

ELEVATION

TABLE OF ELEVATIONS				
CAP	"A"	"B"	"C"	"D"
	669.827	671.727	675.700	677.600
WINGWALLS	"F"	"G"	"H"	"I"
	669.587	671.487	675.460	677.360
TOP OF DS	DS 1	DS 2	DS 3	DS 4
	669.023	668.524	668.024	667.524
SHAFT TIP	633.023	632.524	632.024	631.524
AS- BUILT SHAFT TIP				

STATE OF TEXAS
NESTOR R. RUBIANO
94294
LICENSED PROFESSIONAL ENGINEER

7/06/2012

HL 93 LOADING

P.E. Structural Consultants, Inc.
www.PEStructural.com
TBPE Firm No. F-1475

Texas Department of Transportation
© 2012

IH 35W FROM NORTH TARRANT PKWY TO IH 820

ABUTMENT NO. 1

NB IH 35W TO WB US 287

SCALE: NTS — SHEET 1 OF 2

DESIGN	FED. RD. DIV. NO.	FEDERAL AID PROJECT NO.		HIGHWAY NO.
AEB	6	(SEE TITLE SHEET)		IH 35W
GRAPHICS TLS	STATE	DISTRICT	COUNTY	SHEET NO.
CHECK NRR	TEXAS	FTW	TARRANT	1404
CHECK AB	CONTROL	SECTION	JOB	
	0014	16	255, ETC.	

FILENAME: S3BBR*35N-287W*AB*01.dgn

DRAWING DATE: 7/13/2012

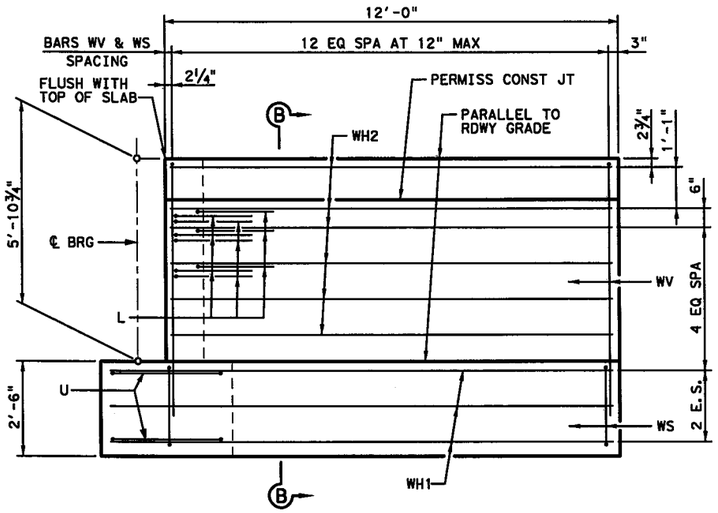

ELEVATION

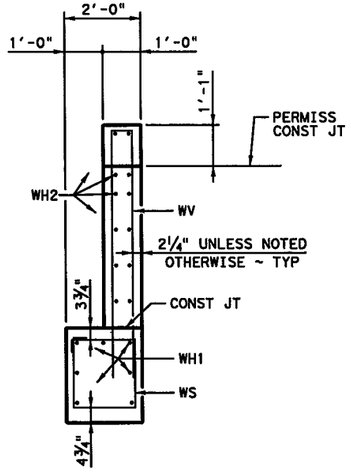

SECTION B-B

THE FRONT AND BACK, BACKWALL FACES, SIDES, AND TOP, EXCEPT UNDER BEARING AREAS, SHALL BE TREATED WITH A "CLASS II, TYPE I PENETRATING CONCRETE SURFACE TREATMENT".

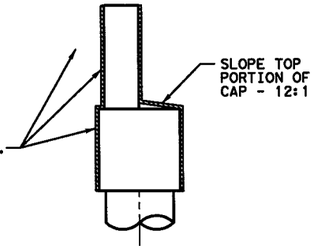

CONCRETE SURFACE TREATMENT DETAIL FOR ABUTMENT

TABLE OF ESTIMATED QUANTITIES

BAR	NO.	SIZE	LENGTH	WEIGHT
A	10	#11	37'-0"	1,966
D	2	1 1/4" D	1'-8"	14
H	10	#6	37'-8"	566
L	18	#6	4'-0"	108
S	36	#4	11'-4"	273
U	4	#6	8'-0"	48
V	37	#5	14'-3"	550
WH1	14	#6	13'-5"	282
WH2	24	#6	11'-8"	421
WS	26	#4	7'-8"	133
WV	26	#5	14'-6"	393
REINFORCING STEEL			LB	4,754
CL C CONC (HPC) (ABUT)			CY	27.9

WINGWALL DETAILS

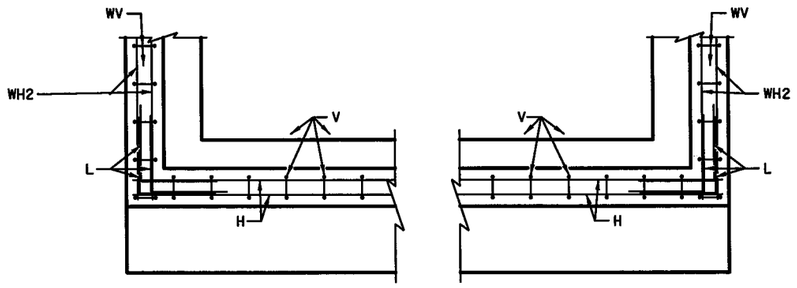

BACKWALL

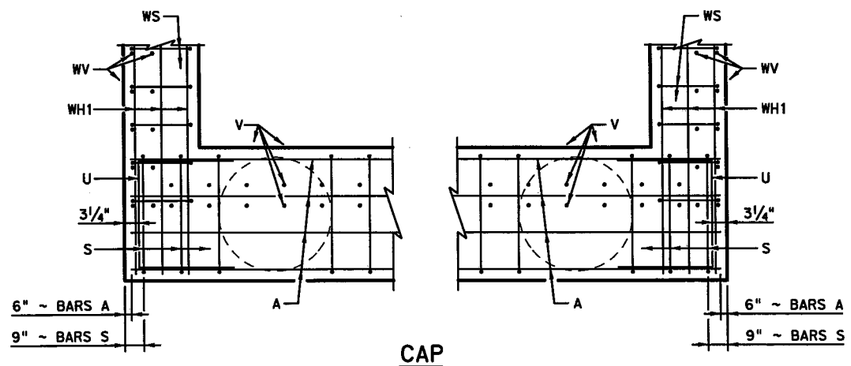

CAP

CORNER DETAILS

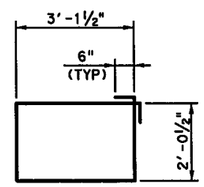

BARS S

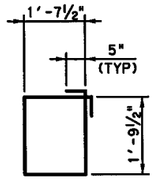

BARS WS

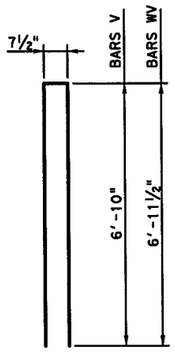

BARS V & WV

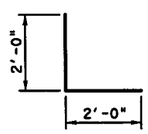

BARS L

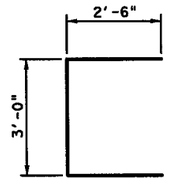

BARS U

GENERAL NOTES:

1. DESIGNED ACCORDING TO AASHTO LRFD BRIDGE DESIGN SPECIFICATIONS, 5TH EDITION (2010).
2. CLASS "C" (HPC) CONCRETE STRENGTH F'C = 3,600 PSI.
3. ALL CAP AND WALL REINFORCING SHALL BE GRADE 60.
4. SEE FD STANDARD FOR ALL FOUNDATION DETAILS AND NOTES.
5. SEE RAIL STANDARD FOR RAIL ANCHORAGE IN WINGWALLS.
6. CALCULATED FOUNDATION LOADS:
   CAP DRILLED SHAFTS = 135 TONS / D.S.

HL 93 LOADING

PESC
P.E. Structural Consultants, Inc.
www.PEStructural.com
TBPE Firm No. F-1475

Texas Department of Transportation

© 2012

IH 35W FROM NORTH TARRANT PKWY TO IH 820

ABUTMENT NO. 1

NB IH 35W TO WB US 287

SCALE: NTS

DESIGN	FED. RD. DIV. NO.	FEDERAL AID PROJECT NO.		HIGHWAY NO.
AEB	6	(SEE TITLE SHEET)		IH 35W
GRAPHICS: TLS	STATE	DISTRICT	COUNTY	SHEET NO.
CHECK: NRR	TEXAS	FTW	TARRANT	1405
CHECK: AB	CONTROL	SECTION	JOB	
	0014	16	255, ETC.	

FILENAME: S3BBR*35N-287W*AB*02.dgn
DRAWING DATE: 7/13/2012

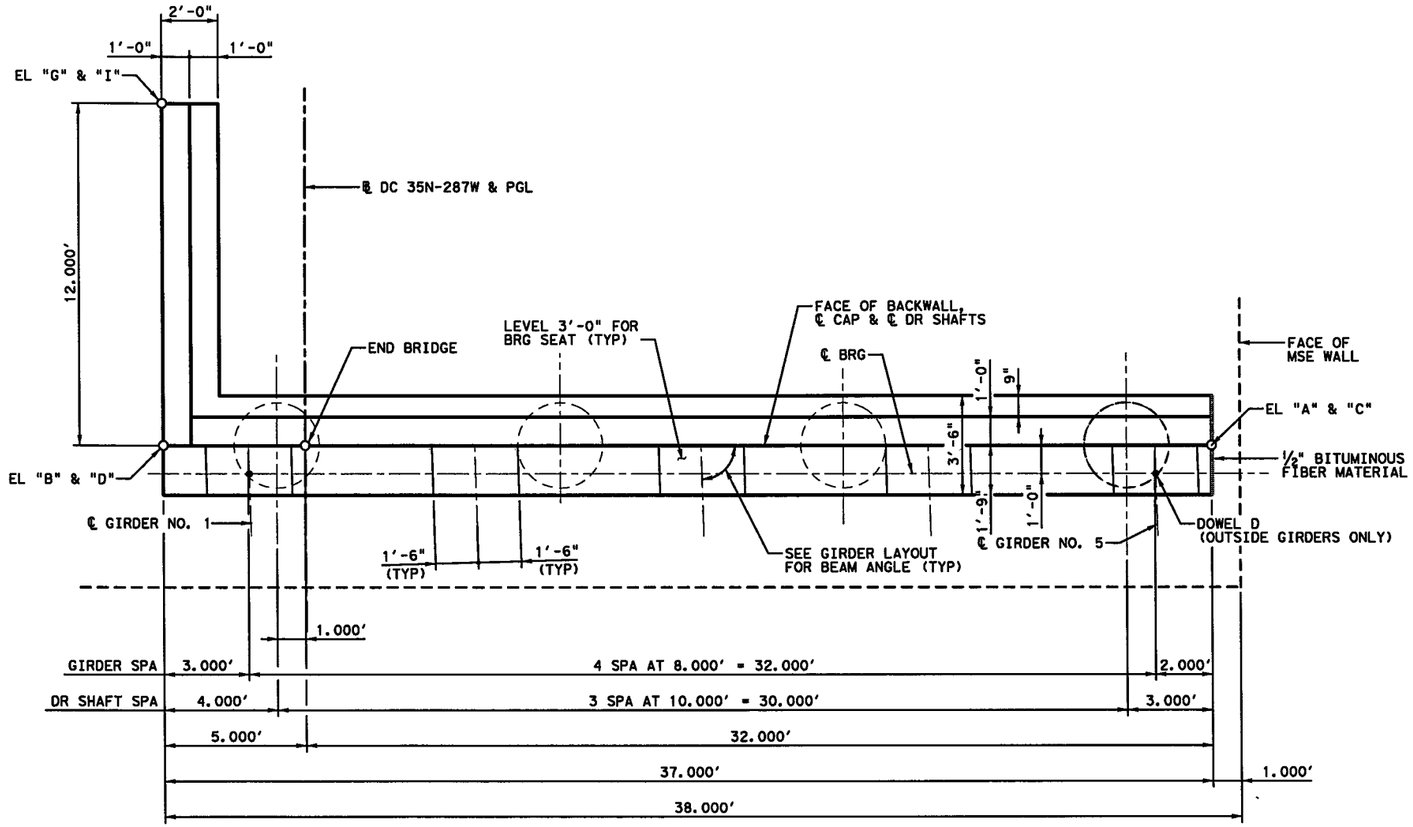

PLAN

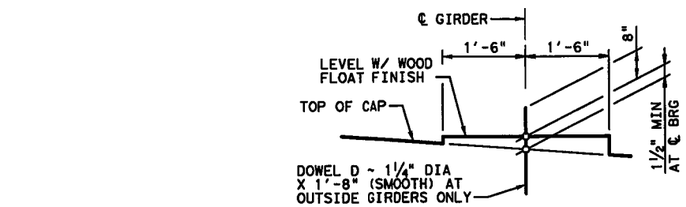

BEARING SEAT DETAIL

(BEARING SURFACE MUST BE CLEAN AND FREE OF ALL LOOSE MATERIAL BEFORE PLACING BEARING PAD.)

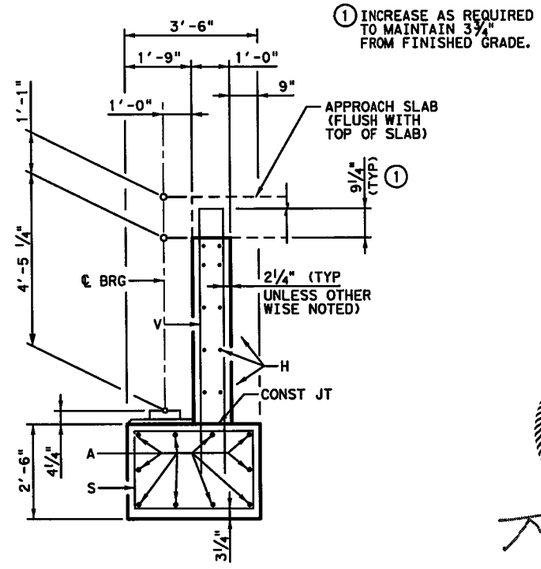

SECTION A-A

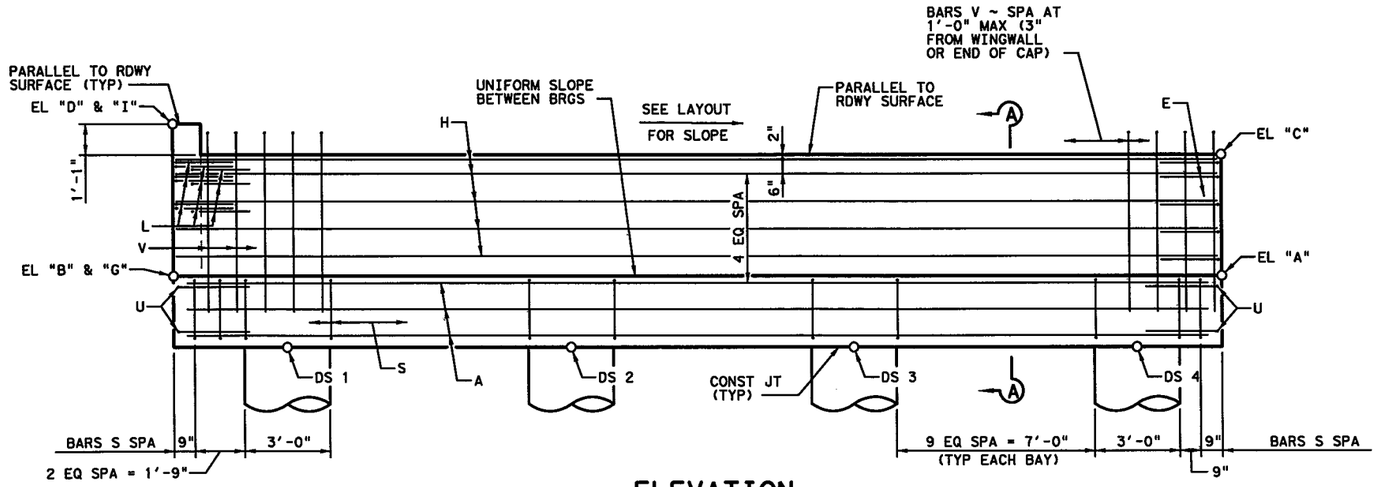

ELEVATION

TABLE OF ELEVATIONS				
CAP	"A"	"B"	"C"	"D"
	668.533	670.143	673.292	675.986
WINGWALLS	"G"	"I"	---	---
	669.785	675.628	---	---
TOP OF DS	DS 1	DS 2	DS 3	DS 4
	667.466	667.031	666.596	666.161
SHAFT TIP	624.466	624.031	623.596	623.161
AS- BUILT SHAFT TIP				

HL 93 LOADING

P.E. Structural Consultants, Inc.
www.PEStructural.com
TBPE Firm No. F-1475

Texas Department of Transportation
© 2012

IH 35W FROM NORTH TARRANT PKWY TO IH 820

ABUTMENT NO. 6

NB IH 35W TO WB US 287

SCALE: NTS SHEET 1 OF 2

DESIGN	FED.RD. DIV.NO.	FEDERAL AID PROJECT NO.		HIGHWAY NO.
AEB	6	(SEE TITLE SHEET)		IH 35W
GRAPHICS	STATE	DISTRICT	COUNTY	SHEET NO.
TLS	TEXAS	FTW	TARRANT	1406
CHECK NRR	CONTROL	SECTION	JOB	
CHECK AB	0014	16	255, ETC.	

FILENAME: S3BBR#35N-287W#AB#03.dgn
DRAWING DATE: 7/13/2012

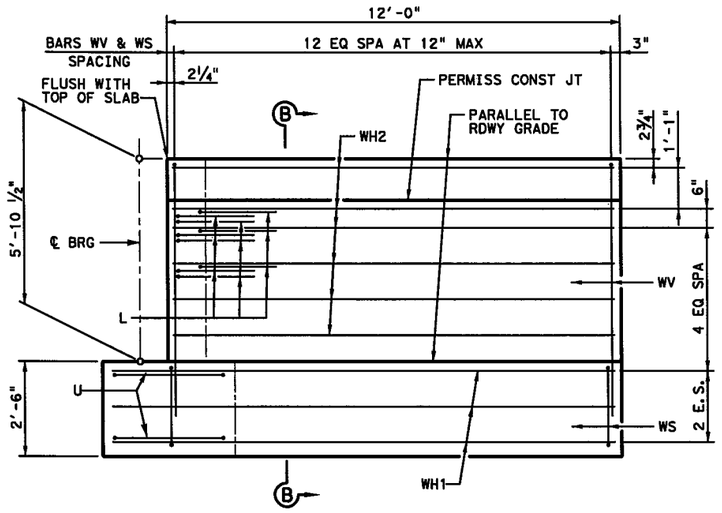

ELEVATION

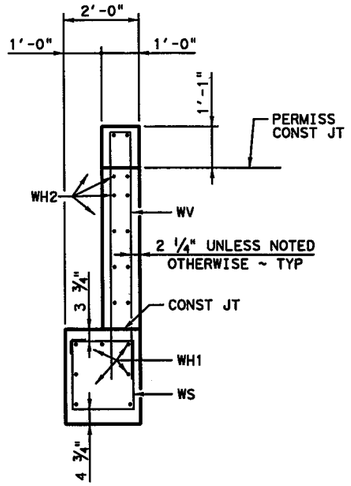

SECTION B-B

WINGWALL DETAILS

THE FRONT AND BACK, BACKWALL FACES, SIDES, AND TOP, EXCEPT UNDER BEARING AREAS, SHALL BE TREATED WITH A "CLASS II, TYPE I PENETRATING CONCRETE SURFACE TREATMENT".

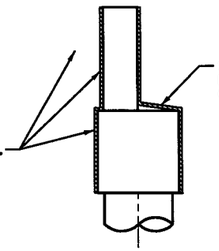

CONCRETE SURFACE TREATMENT DETAIL FOR ABUTMENT

TABLE OF ESTIMATED QUANTITIES

BAR	NO.	SIZE	LENGTH	WEIGHT
A	10	#11	36'-0"	1,913
D	2	1 1/4" D	1'-8"	14
E	5	#5	4'-6"	23
H	10	#6	36'-8"	551
L	9	#6	4'-0"	54
S	35	#4	11'-4"	265
U	4	#6	8'-0"	48
V	37	#5	14'-3"	550
WH1	7	#6	13'-5"	141
WH2	12	#6	11'-8"	210
WS	13	#4	7'-8"	67
WV	13	#5	14'-7"	198
REINFORCING STEEL			LB	4,034
CL C CONC (HPC) (ABUT)			CY	23.0

GENERAL NOTES:

1. DESIGNED ACCORDING TO AASHTO LRFD BRIDGE DESIGN SPECIFICATIONS, 5TH EDITION (2010).
2. CLASS "C" (HPC) CONCRETE STRENGTH F'C = 3,600 PSI.
3. ALL CAP AND WALL REINFORCING SHALL BE GRADE 60.
4. SEE FD STANDARD FOR ALL FOUNDATION DETAILS AND NOTES.
5. SEE RAIL STANDARD FOR RAIL ANCHORAGE IN WINGWALLS.
6. CALCULATED FOUNDATION LOADS:
   CAP DRILLED SHAFTS = 130 TONS / D.S.

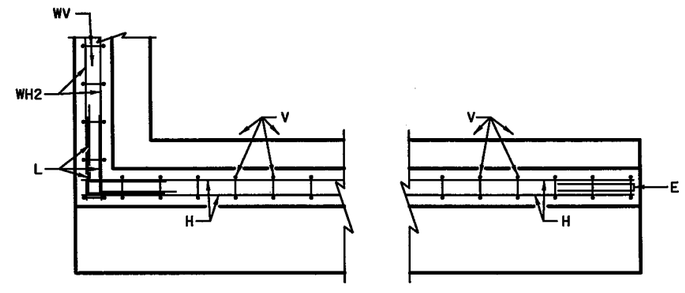

BACKWALL

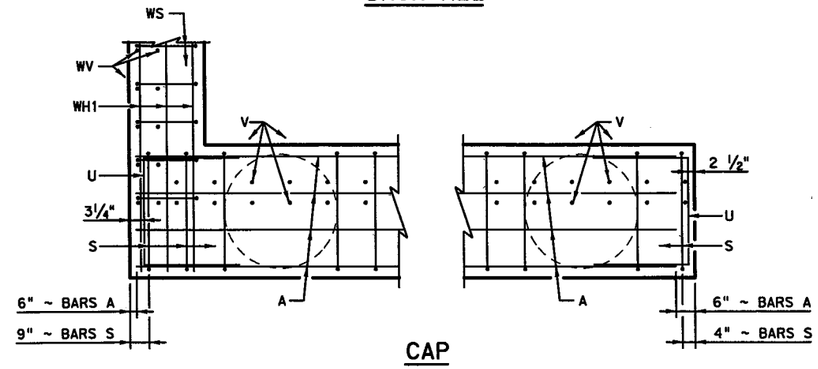

CAP

CORNER DETAILS

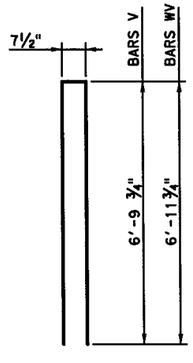

BARS V & WV

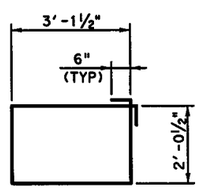

BARS S

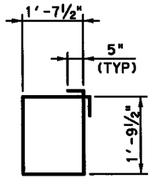

BARS WS

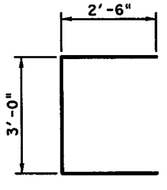

BARS U

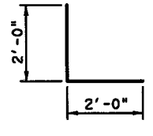

BARS L

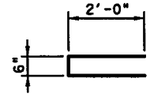

BARS E

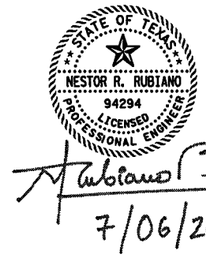

HL 93 LOADING

P.E. Structural Consultants, Inc.
www.PEStructural.com
TBPE Firm No. F-1475

Texas Department of Transportation
© 2012

IH 35W FROM NORTH TARRANT PKWY TO IH 820

ABUTMENT NO. 6

NB IH 35W TO WB US 287

SCALE: NTS

SHEET 2 OF 2

DESIGN	FED.RD. DIV.NO.	FEDERAL AID PROJECT NO.		HIGHWAY NO.
AEB	6	(SEE TITLE SHEET)		IH 35W
GRAPHICS TLS	STATE	DISTRICT	COUNTY	SHEET NO.
CHECK NRR	TEXAS	FTW	TARRANT	1407
CHECK AB	CONTROL	SECTION	JOB	
	0014	16	255, ETC.	

FILENAME: S3BBR*35N-287W*AB*04.dgn

DRAWING DATE: 7/13/2012

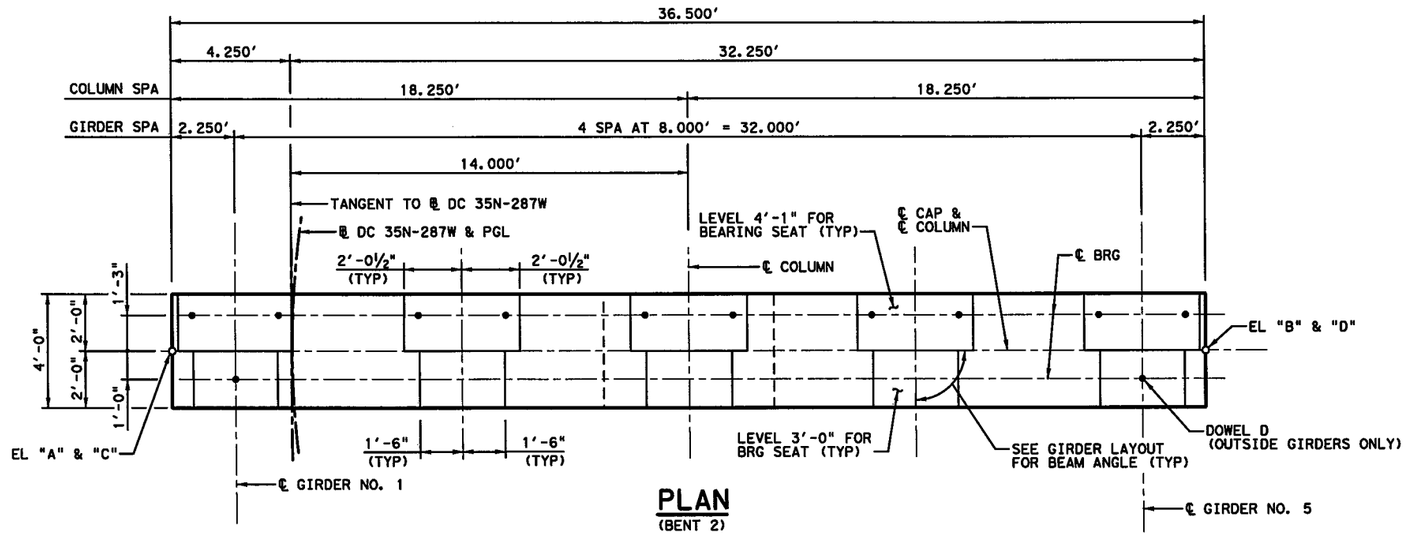

PLAN
(BENT 2)

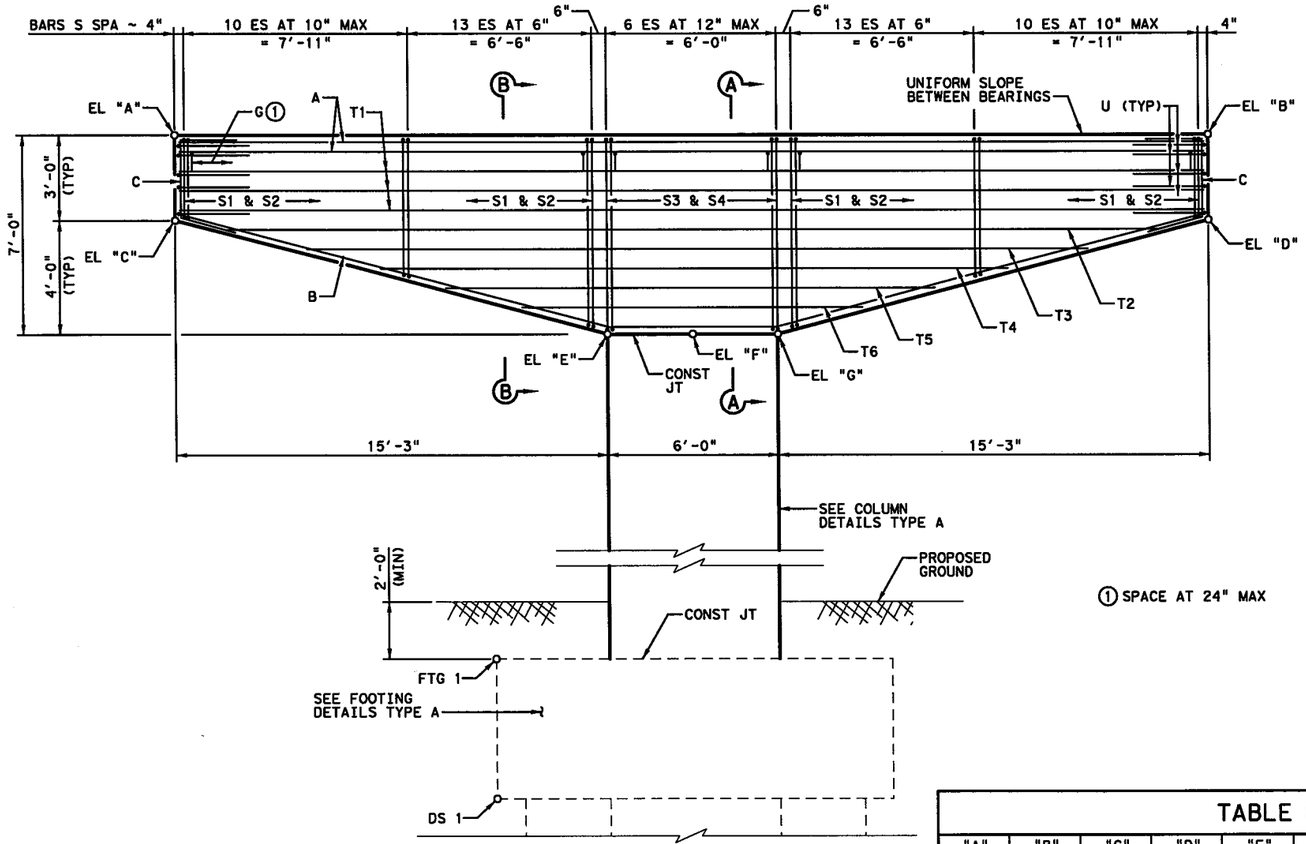

ELEVATION
(BENT 2)

① SPACE AT 24" MAX

TABLE OF ELEVATIONS

"A"	"B"	"C"	"D"	"E"	"F"	"G"	FTG 1	DS 1	DS TIP	AS-BUILT TIP
673.933	672.298	670.936	669.301	666.243	666.108	665.974	644.108	639.191	625.191	

TOP OF DRILLED SHAFT ELEVATIONS WERE ESTIMATED BASED ON GROUND ELEVATION INFORMATION AVAILABLE AT THE TIME OF DESIGN. CONTRACTOR SHALL CONFIRM THESE ELEVATIONS PRIOR TO DRILLING.

GENERAL NOTES:

1. DESIGNED ACCORDING TO AASHTO LRFD BRIDGE DESIGN SPECIFICATIONS, 5TH EDITION (2010).
2. CLASS "C" (HPC) CONCRETE STRENGTH F'C = 3,600 PSI.
3. ALL REINFORCING SHALL BE GRADE 60.
4. CALCULATED FOUNDATION LOAD:
   BENT 2: 480 TONS / D.S.
   BENT 5: 450 TONS / D.S.

STATE OF TEXAS
NESTOR R. RUBIANO
94294
LICENSED
PROFESSIONAL ENGINEER

7/06/2012

HL 93 LOADING

PESC P.E. Structural Consultants, Inc.
www.PEStructural.com
TBPE Firm No. F-1475

Texas Department of Transportation
© 2012

IH 35W FROM NORTH TARRANT PKWY TO IH 820

INTERIOR BENT NO. 2 & 5

NB IH 35W TO WB US 287

SCALE: NTS — SHEET 1 OF 3

DESIGN	FED.RD. DIV.NO.	FEDERAL AID PROJECT NO.		HIGHWAY NO.
AEB	6	(SEE TITLE SHEET)		IH 35W
GRAPHICS TLS	STATE	DISTRICT	COUNTY	SHEET NO.
CHECK NRR	TEXAS	FTW	TARRANT	1408
CHECK AB	CONTROL	SECTION	JOB	
	0014	16	255, ETC.	

FILENAME: S3BBR#35N-287W#IB#01.dgn
DRAWING DATE: 7/13/2012

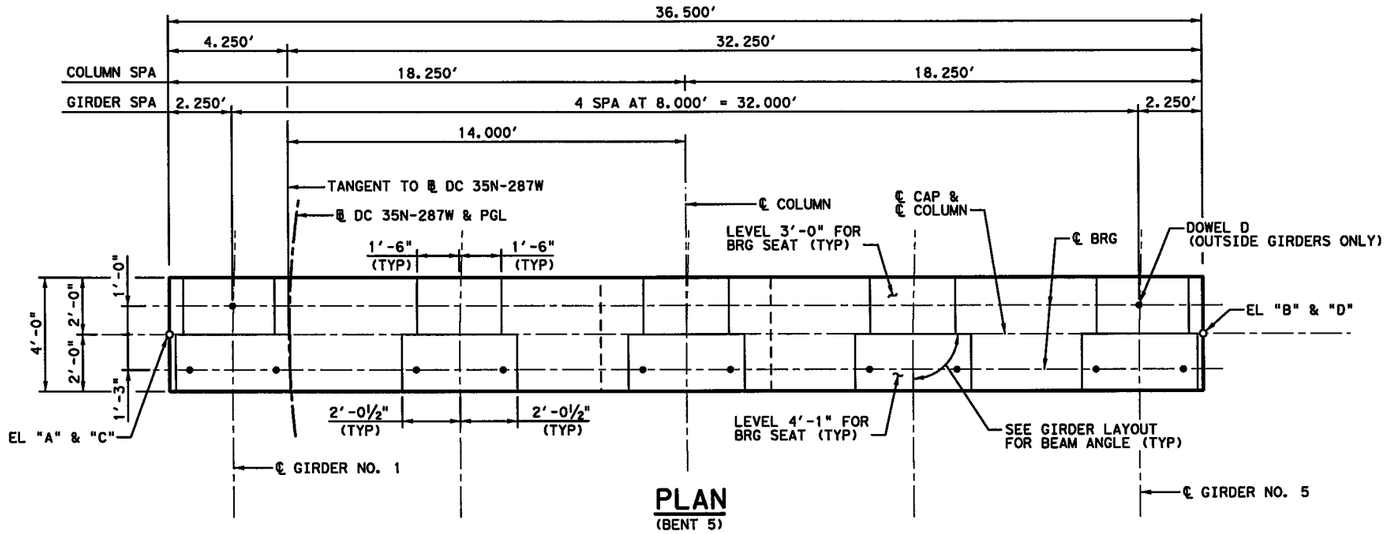

PLAN
(BENT 5)

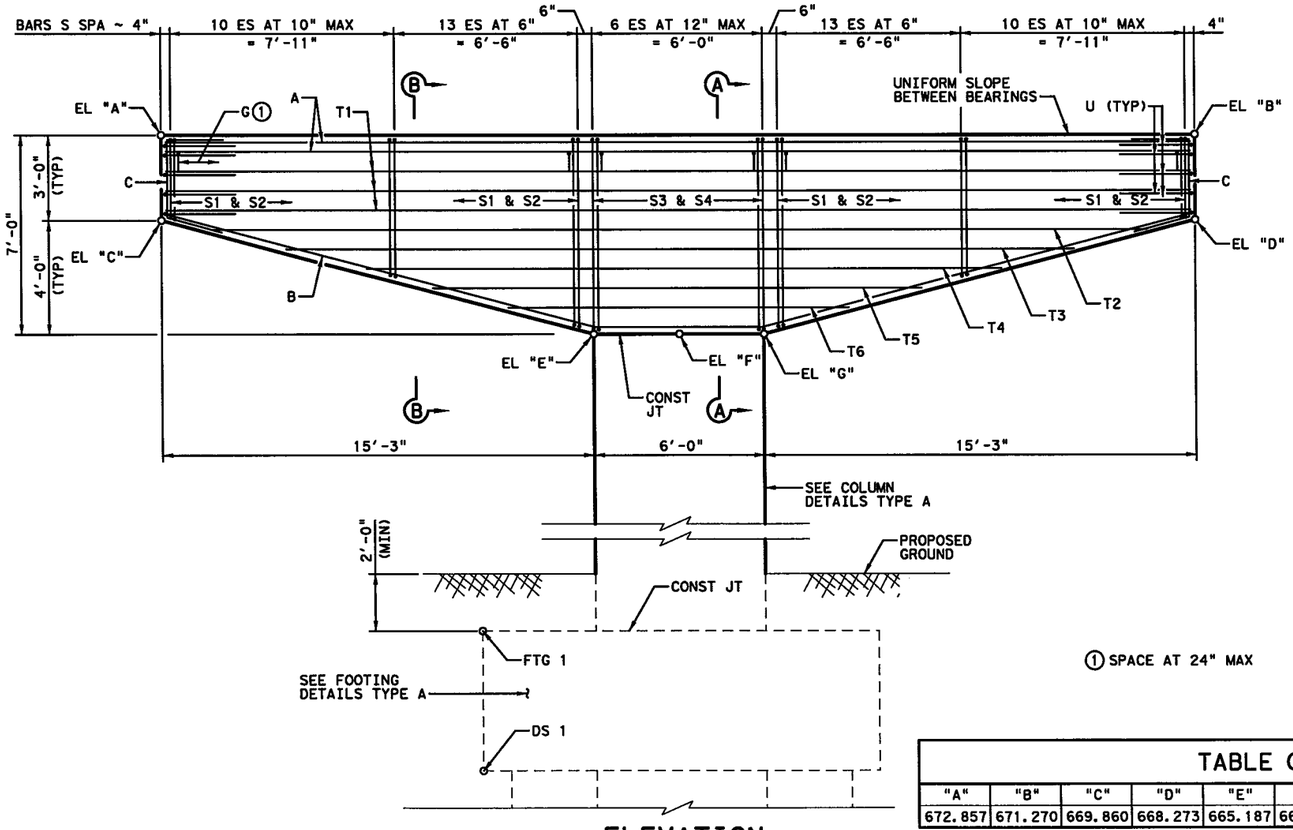

ELEVATION
(BENT 5)

① SPACE AT 24" MAX

TABLE OF ELEVATIONS

"A"	"B"	"C"	"D"	"E"	"F"	"G"	FTG 1	DS 1	DS TIP	AS-BUILT TIP
672.857	671.270	669.860	668.273	665.187	665.057	664.927	650.057	645.140	626.140	

TOP OF DRILLED SHAFT ELEVATIONS WERE ESTIMATED BASED ON GROUND ELEVATION INFORMATION AVAILABLE AT THE TIME OF DESIGN. CONTRACTOR SHALL CONFIRM THESE ELEVATIONS PRIOR TO DRILLING.

STATE OF TEXAS
NESTOR R. RUBIANO
94294
LICENSED PROFESSIONAL ENGINEER
7/06/2012

HL 93 LOADING

PESC
P.E. Structural Consultants, Inc.
www.PEStructural.com
TBPE Firm No. F-1475

Texas Department of Transportation
© 2012

IH 35W FROM NORTH TARRANT PKWY TO IH 820

INTERIOR BENT NO. 2 & 5

NB IH 35W TO WB US 287

SCALE: NTS — SHEET 2 OF 3

DESIGN	FED.RD. DIV.NO.	FEDERAL AID PROJECT NO.		HIGHWAY NO.
AEB	6	(SEE TITLE SHEET)		IH 35W
GRAPHICS	STATE	DISTRICT	COUNTY	SHEET NO.
TLS	TEXAS	FTW	TARRANT	1409
CHECK	CONTROL	SECTION	JOB	
NRR	0014	16	255, ETC.	
CHECK				
AB				

DRAWING DATE: 7/13/2012
FILENAME: S3BBR#35N-287W#IB#06.dgn

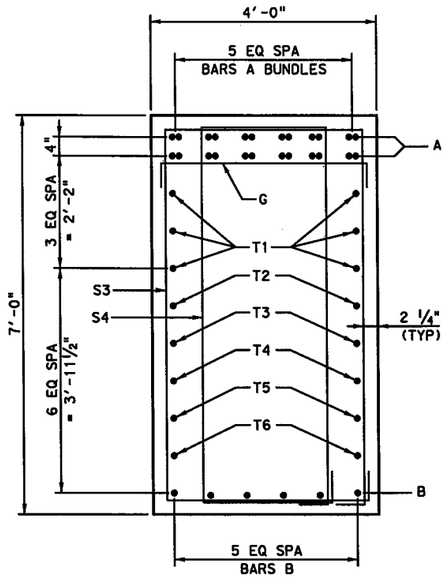

SECTION A-A

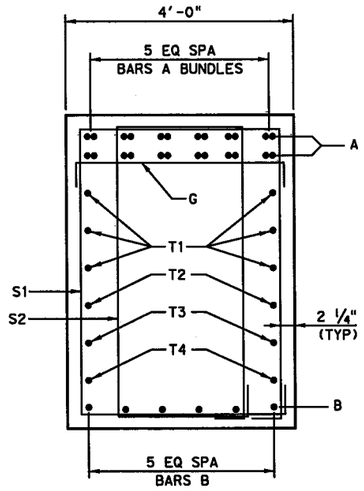

SECTION B-B

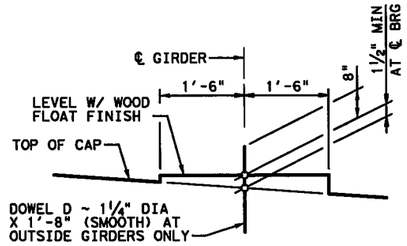

BEARING SEAT DETAIL

(CONCRETE I-GIRDERS)
(BEARING SURFACE MUST BE CLEAN AND FREE OF ALL LOOSE MATERIAL BEFORE PLACING BEARING PAD.)

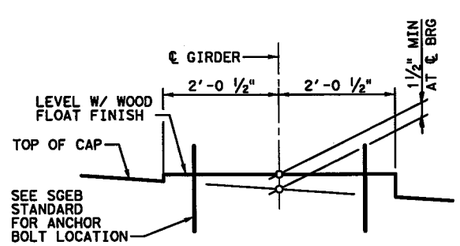

BEARING SEAT DETAIL

(STEEL PLATE GIRDERS)
(BEARING SURFACE MUST BE CLEAN AND FREE OF ALL LOOSE MATERIAL BEFORE PLACING BEARING PAD.)

TABLE OF ESTIMATED ② QUANTITIES

BAR	NO.	SIZE	LENGTH	WEIGHT
A	24	#11	36'-2"	4,612
B	6	#11	37'-2"	1,185
C	12	#5	4'-7"	57
D	2	1 1/4" D	1'-8"	14
G	20	#4	4'-5"	59
S1	48	#5	17'-5" AVG	872
S2	48	#5	14'-2" AVG	709
S3	7	#5	21'-6"	157
S4	7	#5	18'-3"	133
T1	6	#7	36'-2"	444
T2	2	#7	32'-11"	135
T3	2	#7	27'-6"	112
T4	2	#7	22'-2"	91
T5	2	#7	17'-3"	71
T6	2	#7	12'-0"	49
U	10	#5	8'-7"	90
REINFORCING STEEL			LB	8,790
CL C CONC (HPC) (CAP)			CY	29.2

② PER BENT CAP

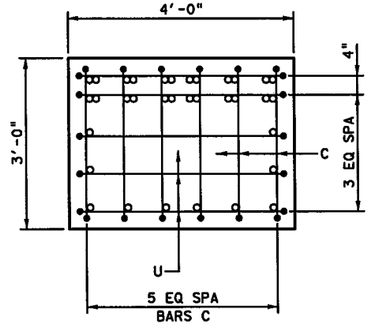

CAP END VIEW

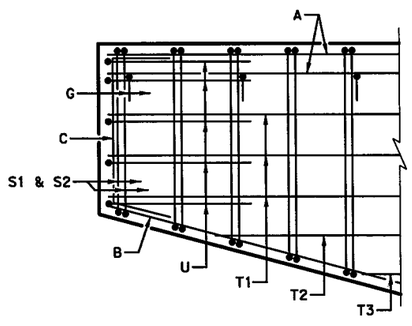

CAP END DETAIL

THE TOP, SIDES, AND ENDS, EXCEPT UNDER BEARING AREAS, SHALL BE TREATED WITH A "CLASS II, TYPE I PENETRATING CONCRETE SURFACE TREATMENT"

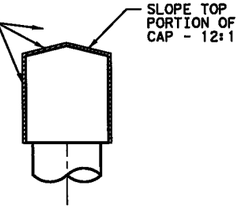

CONCRETE SURFACE TREATMENT DETAIL FOR INTERIOR BENT

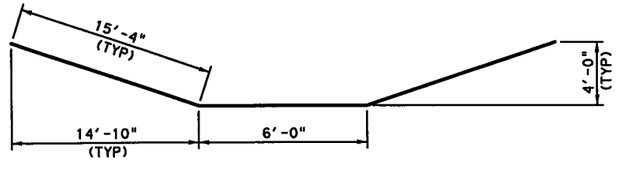

BARS B

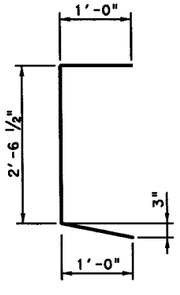

BARS C

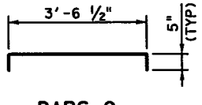

BARS G

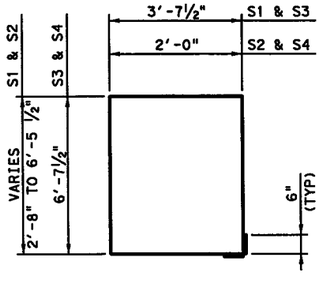

BARS S

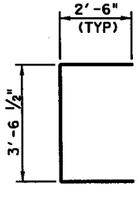

BARS U

HL 93 LOADING

P.E. Structural Consultants, Inc.
www.PEStructural.com
TBPE Firm No. F-1475

Texas Department of Transportation
© 2012

IH 35W FROM NORTH TARRANT PKWY TO IH 820

INTERIOR BENT NO. 2 & 5

NB IH 35W TO WB US 287

SCALE: NTS — SHEET 3 OF 3

DESIGN	FED. RD. DIV. NO.	FEDERAL AID PROJECT NO.		HIGHWAY NO.
AEB	6	(SEE TITLE SHEET)		IH 35W
GRAPHICS TLS	STATE	DISTRICT	COUNTY	SHEET NO.
CHECK NRR	TEXAS	FTW	TARRANT	1410
CHECK AB	CONTROL	SECTION	JOB	
	0014	16	255, ETC.	

DRAWING DATE: 7/13/2012 FILENAME: S3BBR*35N-287W*IB*02.dgn

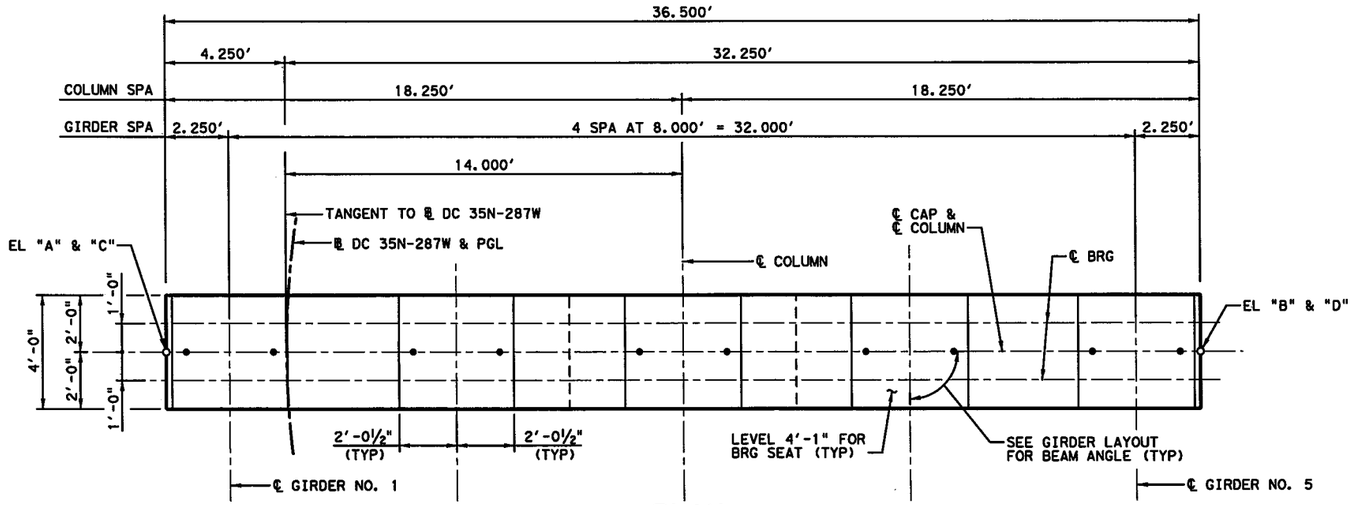

PLAN

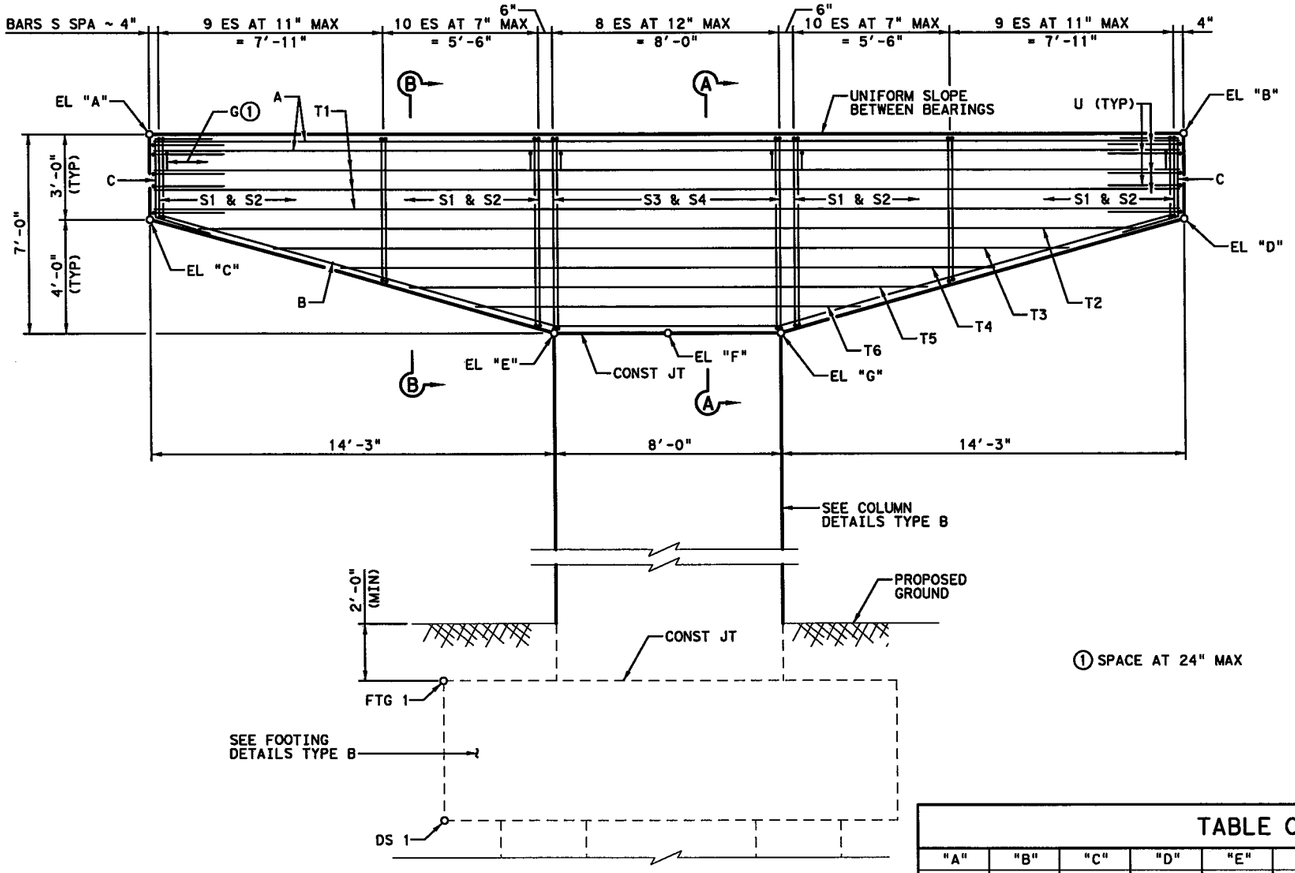

ELEVATION

① SPACE AT 24" MAX

TABLE OF ELEVATIONS

"A"	"B"	"C"	"D"	"E"	"F"	"G"	FTG 1	DS 1	DS TIP	AS-BUILT TIP
673.464	671.908	670.467	668.911	665.85	665.680	665.509	649.680	644.763	621.763	

TOP OF DRILLED SHAFT ELEVATIONS WERE ESTIMATED BASED ON GROUND ELEVATION INFORMATION AVAILABLE AT THE TIME OF DESIGN. CONTRACTOR SHALL CONFIRM THESE ELEVATIONS PRIOR TO DRILLING.

GENERAL NOTES:

1. DESIGNED ACCORDING TO AASHTO LRFD BRIDGE DESIGN SPECIFICATIONS, 5TH EDITION (2010).
2. CLASS "F" (HPC) CONCRETE STRENGTH F'C = 5,000 PSI.
3. ALL REINFORCING SHALL BE GRADE 60.
4. CALCULATED FOUNDATION LOAD: 640 TONS / D.S.

STATE OF TEXAS
NESTOR R. RUBIANO
94294
LICENSED
PROFESSIONAL ENGINEER

7/06/2012

HL 93 LOADING

PESC
P.E. Structural Consultants, Inc.
www.PEStructural.com
TBPE Firm No. F-1475

Texas Department of Transportation
© 2012

IH 35W FROM NORTH TARRANT PKWY TO IH 820

INTERIOR BENT NO. 3

NB IH 35W TO WB US 287

SCALE: NTS — SHEET 1 OF 2

DESIGN	FED. RD. DIV. NO.	FEDERAL AID PROJECT NO.		HIGHWAY NO.
AEB	6	(SEE TITLE SHEET)		IH 35W
GRAPHICS	STATE	DISTRICT	COUNTY	SHEET NO.
TLS	TEXAS	FTW	TARRANT	1411
CHECK	CONTROL	SECTION	JOB	
NRR	0014	16	255, ETC.	
CHECK				
AB				

FILENAME: S3BBR#35N-287W#IB#03.dgn
DRAWING DATE: 7/13/2012

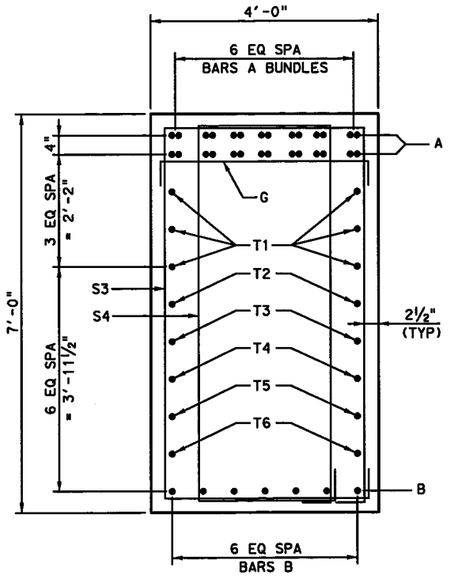

SECTION A-A

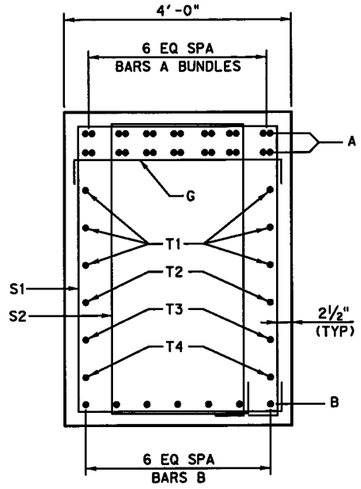

SECTION B-B

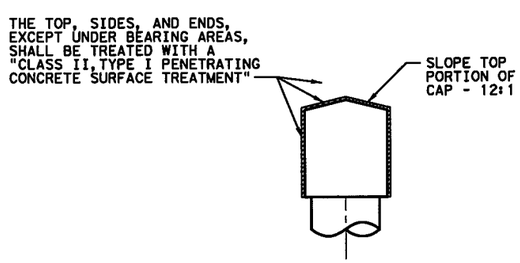

CONCRETE SURFACE TREATMENT DETAIL FOR INTERIOR BENT

TABLE OF ESTIMATED QUANTITIES				
BAR	NO.	SIZE	LENGTH	WEIGHT
A	28	#11	36'-2"	5,380
B	7	#11	37'-4"	1,388
C	14	#5	4'-7"	67
G	19	#4	4'-5"	56
S1	40	#6	18'-4"	1,101
S2	40	#6	15'-2"	911
S3	9	#6	22'-4"	302
S4	9	#6	19'-2"	259
T1	6	#7	36'-2"	444
T2	2	#7	33'-1"	135
T3	2	#7	28'-1"	115
T4	2	#7	23'-1"	94
T5	2	#7	18'-3"	75
T6	2	#7	13'-7"	56
U	10	#5	8'-7"	90
REINFORCING STEEL			LB	10,473
CL F CONC (MASS) (HPC) (CAP)			CY	29.8

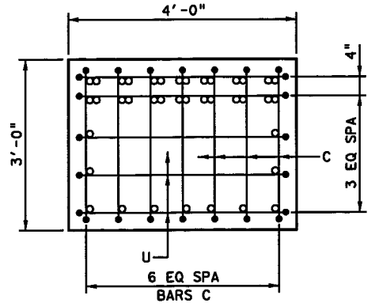

CAP END VIEW

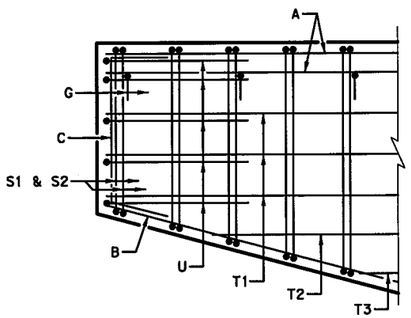

CAP END DETAIL

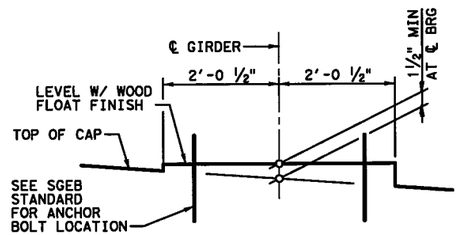

BEARING SEAT DETAIL

(STEEL PLATE GIRDERS)
(BEARING SURFACE MUST BE CLEAN AND FREE OF ALL LOOSE MATERIAL BEFORE PLACING BEARING PAD.)

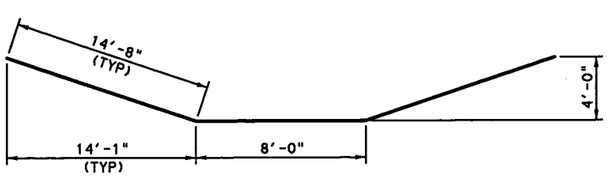

BARS B

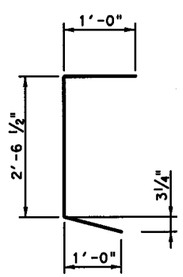

BARS C

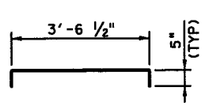

BARS G

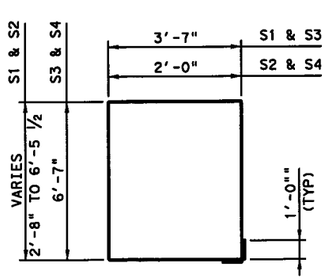

BARS S

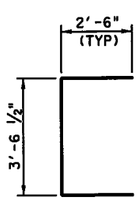

BARS U

STATE OF TEXAS
NESTOR R. RUBIANO
94294
LICENSED
PROFESSIONAL ENGINEER
8/29/2012

HL 93 LOADING

PESC P.E. Structural Consultants, Inc.
www.PEStructural.com
TBPE Firm No. F-1475

Texas Department of Transportation
© 2012

IH 35W FROM NORTH TARRANT PKWY TO IH 820

INTERIOR BENT NO. 3

NB IH 35W TO WB US 287

SCALE: NTS — SHEET 2 OF 2

DESIGN	FED.RD. DIV.NO.	FEDERAL AID PROJECT NO.		HIGHWAY NO.
AEB	6	(SEE TITLE SHEET)		IH 35W
GRAPHICS TLS	STATE	DISTRICT	COUNTY	SHEET NO.
CHECK NRR	TEXAS	FTW	TARRANT	1412
CHECK AB	CONTROL	SECTION	JOB	
	0014	16	255, ETC.	

DRAWING DATE: 7/13/2012 FILENAME: S38BR#35N-287W#1B#04.dgn

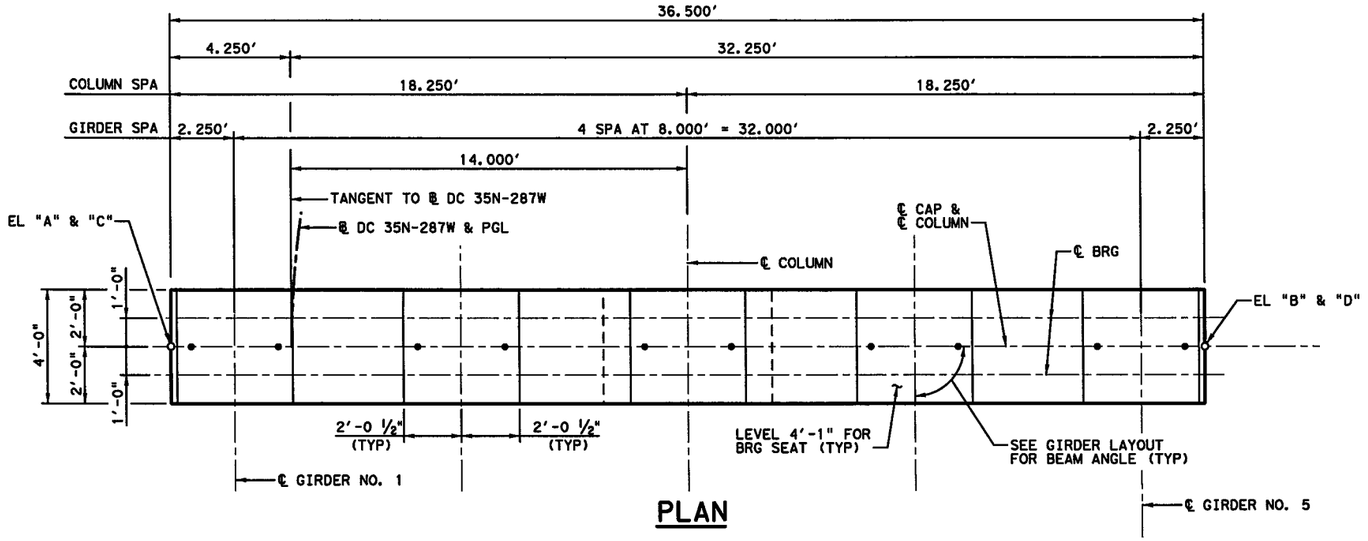

PLAN

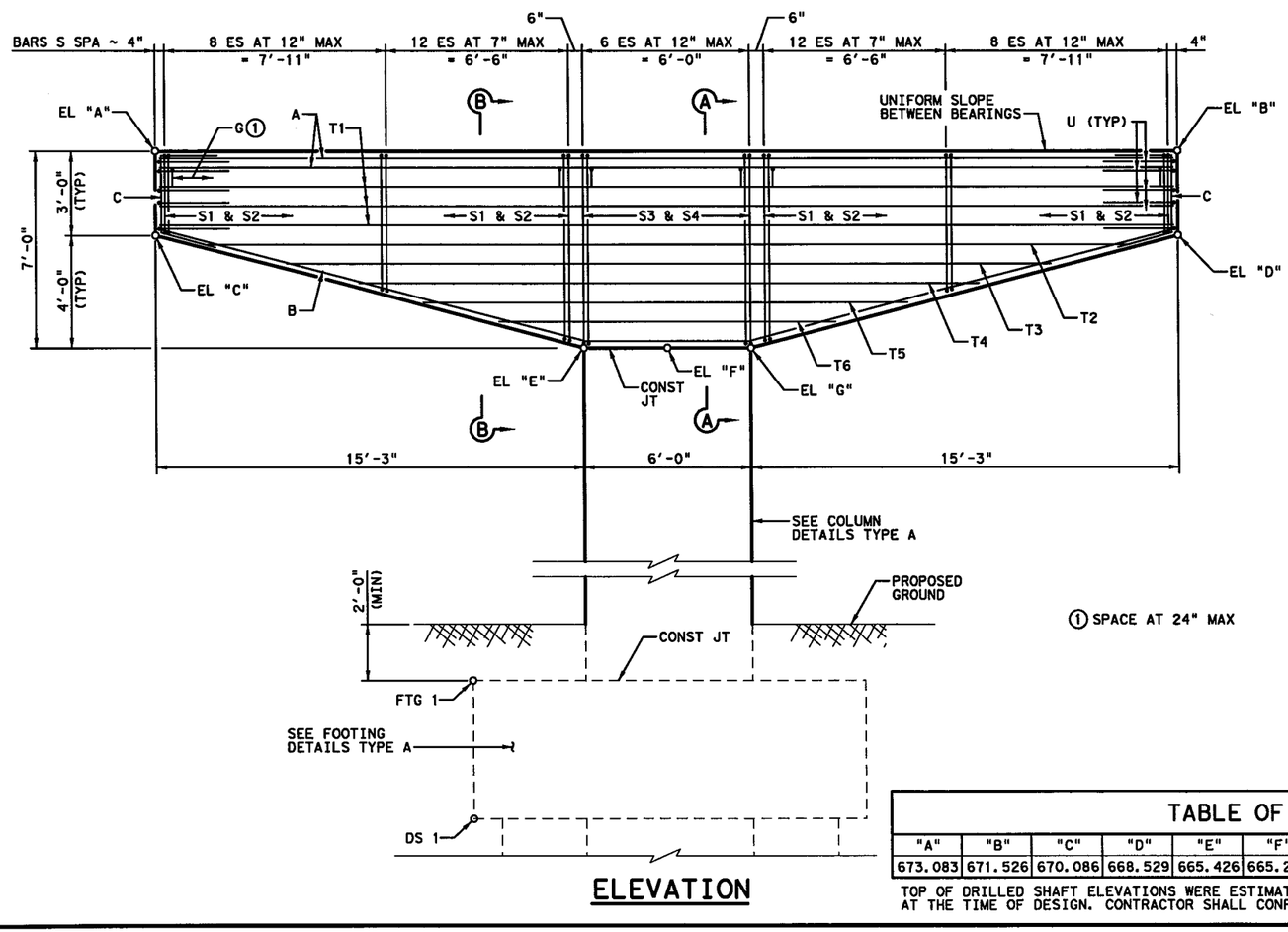

ELEVATION

① SPACE AT 24" MAX

TABLE OF ELEVATIONS

"A"	"B"	"C"	"D"	"E"	"F"	"G"	FTG 1	DS 1	DS TIP	AS-BUILT TIP
673.083	671.526	670.086	668.529	665.426	665.298	665.170	649.298	644.381	624.381	

TOP OF DRILLED SHAFT ELEVATIONS WERE ESTIMATED BASED ON GROUND ELEVATION INFORMATION AVAILABLE AT THE TIME OF DESIGN. CONTRACTOR SHALL CONFIRM THESE ELEVATIONS PRIOR TO DRILLING.

GENERAL NOTES:

1. DESIGNED ACCORDING TO AASHTO LRFD BRIDGE DESIGN SPECIFICATIONS, 5TH EDITION (2010).
2. CLASS "C" (HPC) CONCRETE STRENGTH F'C = 3,600 PSI.
3. ALL REINFORCING SHALL BE GRADE 60.
4. CALCULATED FOUNDATION LOAD: 520 TONS / D.S.

STATE OF TEXAS
NESTOR R. RUBIANO
94294
LICENSED
PROFESSIONAL ENGINEER

7/06/2012

HL 93 LOADING

P.E. Structural Consultants, Inc.
www.PEStructural.com
TBPE Firm No. F-1475

Texas Department of Transportation
© 2012

IH 35W FROM NORTH TARRANT PKWY TO IH 820

INTERIOR BENT NO. 4

NB IH 35W TO WB US 287

SCALE: NTS

SHEET 1 OF 2

DESIGN	FED.RD. DIV.NO.	FEDERAL AID PROJECT NO.		HIGHWAY NO.
AEB	6	(SEE TITLE SHEET)		IH 35W
GRAPHICS TLS	STATE	DISTRICT	COUNTY	SHEET NO.
CHECK NRR	TEXAS	FTW	TARRANT	
CHECK AB	CONTROL	SECTION	JOB	1413
	0014	16	255, ETC.	

FILENAME: S3BBR*35N-287W*IB*05.dgn

DRAWING DATE: 7/13/2012

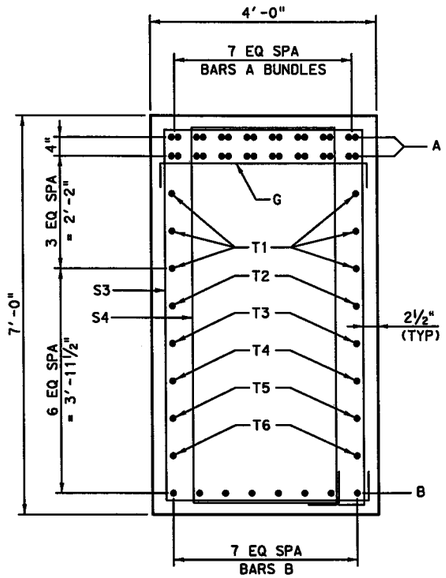

SECTION A-A

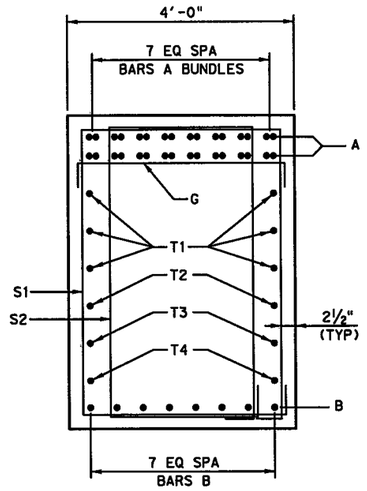

SECTION B-B

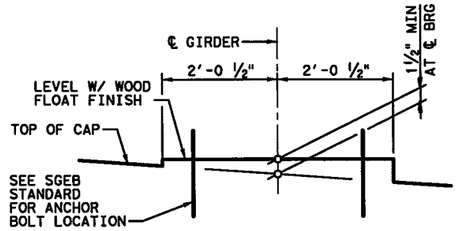

BEARING SEAT DETAIL

(STEEL PLATE GIRDERS)
(BEARING SURFACE MUST BE CLEAN AND FREE OF ALL LOOSE MATERIAL BEFORE PLACING BEARING PAD.)

TABLE OF ESTIMATED QUANTITIES

BAR	NO.	SIZE	LENGTH	WEIGHT
A	32	#11	36'-2"	6,149
B	8	#11	37'-2"	1,580
C	16	#5	4'-7"	76
G	19	#4	4'-5"	56
S1	42	#6	18'-4"	1,157
S2	42	#6	15'-2"	957
S3	7	#6	22'-4"	235
S4	7	#6	19'-2"	202
T1	6	#7	36'-2"	444
T2	2	#7	32'-11"	135
T3	2	#7	27'-6"	112
T4	2	#7	22'-2"	91
T5	2	#7	17'-3"	71
T6	2	#7	12'-0"	49
U	10	#5	8'-7"	90
REINFORCING STEEL			LB	11,404
CL C CONC (HPC) (CAP)			CY	29.2

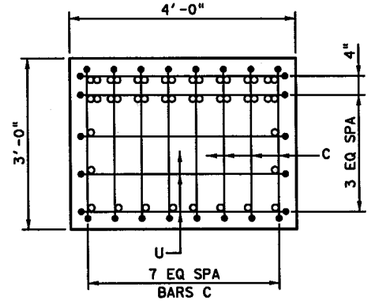

CAP END VIEW

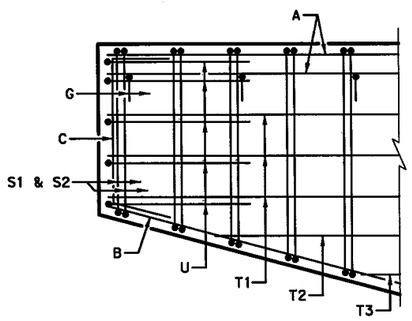

CAP END DETAIL

THE TOP, SIDES, AND ENDS, EXCEPT UNDER BEARING AREAS, SHALL BE TREATED WITH A "CLASS II, TYPE I PENETRATING CONCRETE SURFACE TREATMENT"

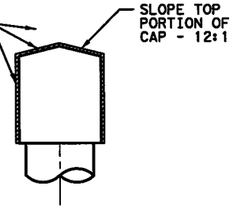

CONCRETE SURFACE TREATMENT
DETAIL FOR INTERIOR BENT

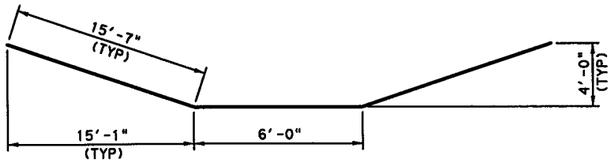

BARS B

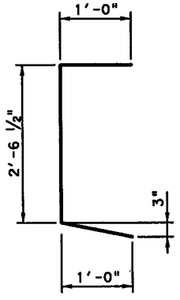

BARS C

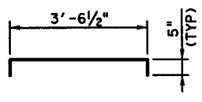

BARS G

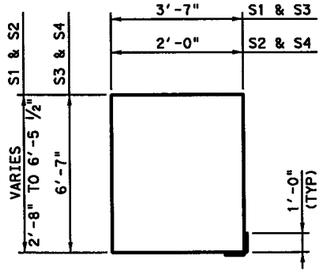

BARS S

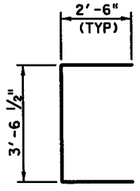

BARS U

STATE OF TEXAS
NESTOR R. RUBIANO
94294
LICENSED
PROFESSIONAL ENGINEER

7/06/2012

HL 93 LOADING

PESC P.E. Structural Consultants, Inc.
www.PEStructural.com
TBPE Firm No. F-1475

Texas Department of Transportation
© 2012

IH 35W FROM NORTH TARRANT PKWY TO IH 820

INTERIOR BENT NO. 4

NB IH 35W TO WB US 287

SCALE: NTS — SHEET 2 OF 2

DESIGN	FED. RD. DIV. NO.	FEDERAL AID PROJECT NO.		HIGHWAY NO.
AEB	6	(SEE TITLE SHEET)		IH 35W
GRAPHICS	STATE	DISTRICT	COUNTY	SHEET NO.
TLS	TEXAS	FTW	TARRANT	1414
CHECK	CONTROL	SECTION	JOB	
NRR	0014	16	255, ETC.	
CHECK				
AB				

FILENAME: S3BBR*35N-287W*IB*07.dgn
DRAWING DATE: 7/13/2012

TABLE OF ESTIMATED QUANTITIES ①						TOTAL ESTIMATED QUANTITIES ②	
BENT	COLUMN HEIGHT "H"	BAR H (#4) 15'-8"		BAR V 44 - #11		TOTAL REINFORCING STEEL	CL C CONC (COLUMN) (HPC)
NO.	(FT)	NO.	WEIGHT (LB)	LENGTH	WEIGHT (LB)	WEIGHT (LB)	(CY)
2	22	46	481	27' - 3"	6,370	6,851	19.6
4	16	34	356	21' - 3"	4,968	5,324	14.2
5	15	32	335	20' - 3"	4,734	5,069	13.3

① ADJUST BARS V LENGTH BY 1 FT AND NUMBER OF BARS H BY 2 FOR EACH LINEAR FOOT OF VARIATION IN "H" VALUE.

② ADJUST REINFORCING STEEL TOTAL BY 255 LBS AND CLASS "C" CONCRETE TOTAL BY 0.889 CY FOR EACH LINEAR FOOT OF VARIATION IN "H" VALUE.

GENERAL NOTES:

1. DESIGNED ACCORDING TO AASHTO LRFD BRIDGE DESIGN SPECIFICATIONS, 5TH EDITION (2010).
2. CLASS "C" (HPC) CONCRETE STRENGTH F'C = 3,600 PSI.
3. ALL REINFORCING SHALL BE GRADE 60.

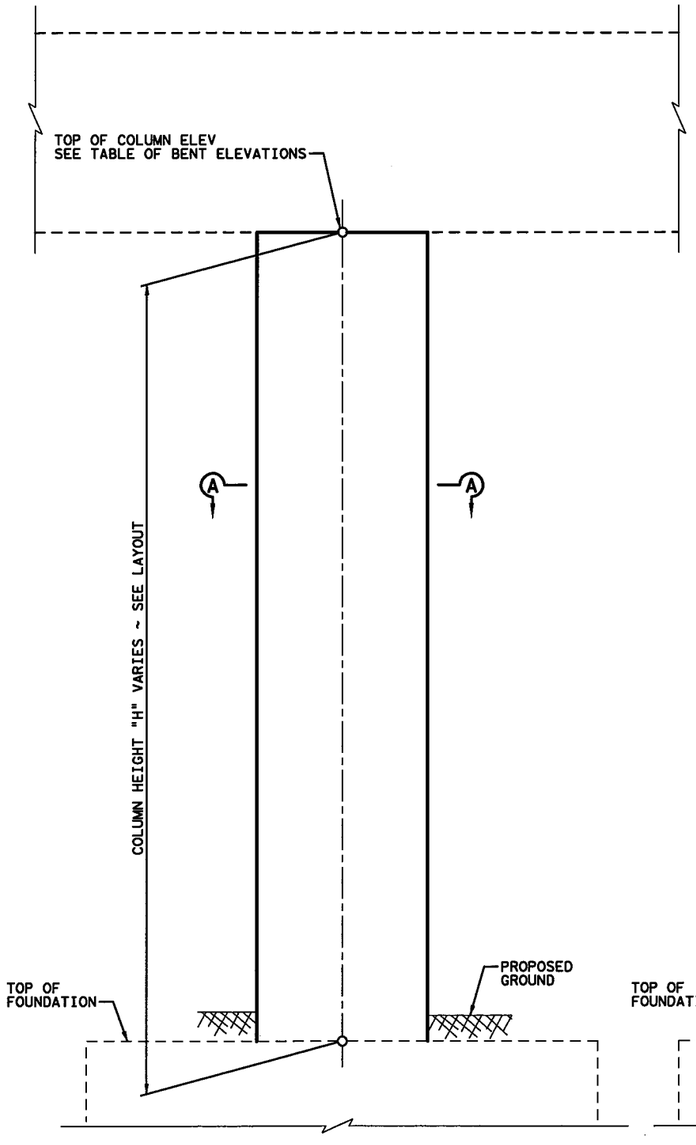

COLUMN GEOMETRY

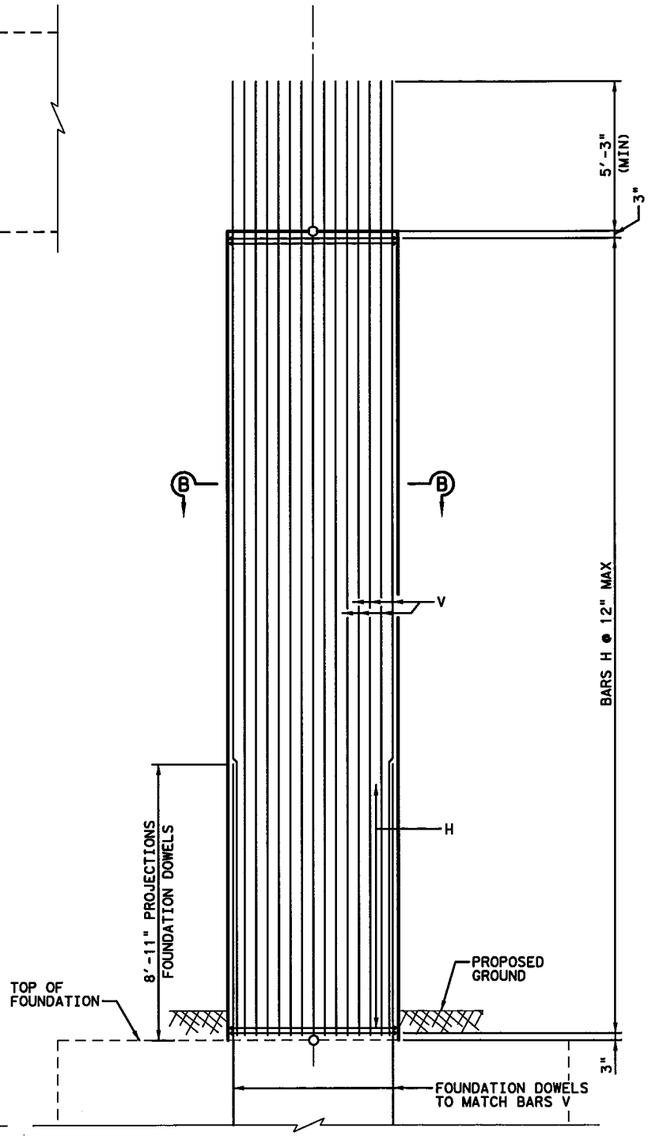

COLUMN REINFORCEMENT DETAILS

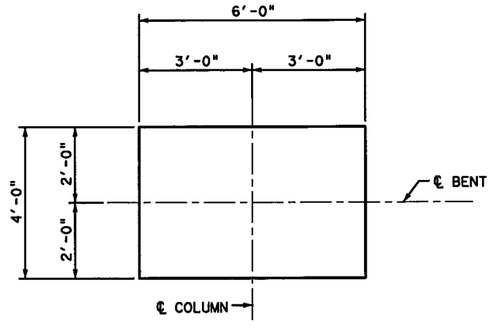

SECTION A-A

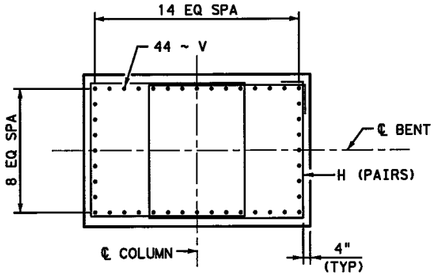

SECTION B-B

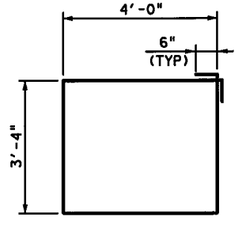

BARS H

STATE OF TEXAS
NESTOR R. RUBIANO
94294
LICENSED
PROFESSIONAL ENGINEER
8/29/2012

HL 93 LOADING

P.E. Structural Consultants, Inc.
www.PEStructural.com
TBPE Firm No. F-1475

Texas Department of Transportation
© 2012

IH 35W FROM NORTH TARRANT PKWY TO IH 820

COLUMN DETAILS TYPE A

NB IH 35W TO WB US 287

SCALE: NTS — SHEET 1 OF 1

DESIGN	FED. RD. DIV. NO.	FEDERAL AID PROJECT NO.		HIGHWAY NO.
AEB	6	(SEE TITLE SHEET)		IH 35W
GRAPHICS TLS	STATE	DISTRICT	COUNTY	SHEET NO.
CHECK NRR	TEXAS	FTW	TARRANT	1415
CHECK AB	CONTROL	SECTION	JOB	
	0014	16	255, ETC.	

FILENAME: S3BBR*35N-287W*CO*01.dgn

DRAWING DATE: 7/13/2012

TABLE OF ESTIMATED QUANTITIES ①						TOTAL ESTIMATED QUANTITIES ②	
BENT	COLUMN HEIGHT "H"	BAR H (#4) 17'-4"		BAR V 54 - #11		TOTAL REINFORCING STEEL	CL F CONC (COLUMN) (MASS) (HPC)
NO.	(FT)	NO.	WEIGHT (LB)	LENGTH	WEIGHT (LB)	WEIGHT (LB)	(CY)
3	16	34	394	21' - 3"	6,097	6,491	19.0

① ADJUST BARS V LENGTH BY 1 FT AND NUMBER OF BARS H BY 2 FOR EACH LINEAR FOOT OF VARIATION IN "H" VALUE.

② ADJUST REINFORCING STEEL TOTAL BY 310 LBS AND CLASS "F" CONCRETE TOTAL BY 1.185 CY FOR EACH LINEAR FOOT OF VARIATION IN "H" VALUE.

GENERAL NOTES:

1. DESIGNED ACCORDING TO AASHTO LRFD BRIDGE DESIGN SPECIFICATIONS, 5TH EDITION (2010).
2. CLASS "F"(HPC) CONCRETE STRENGTH F'C = 5,000 PSI.
3. ALL REINFORCING SHALL BE GRADE 60.

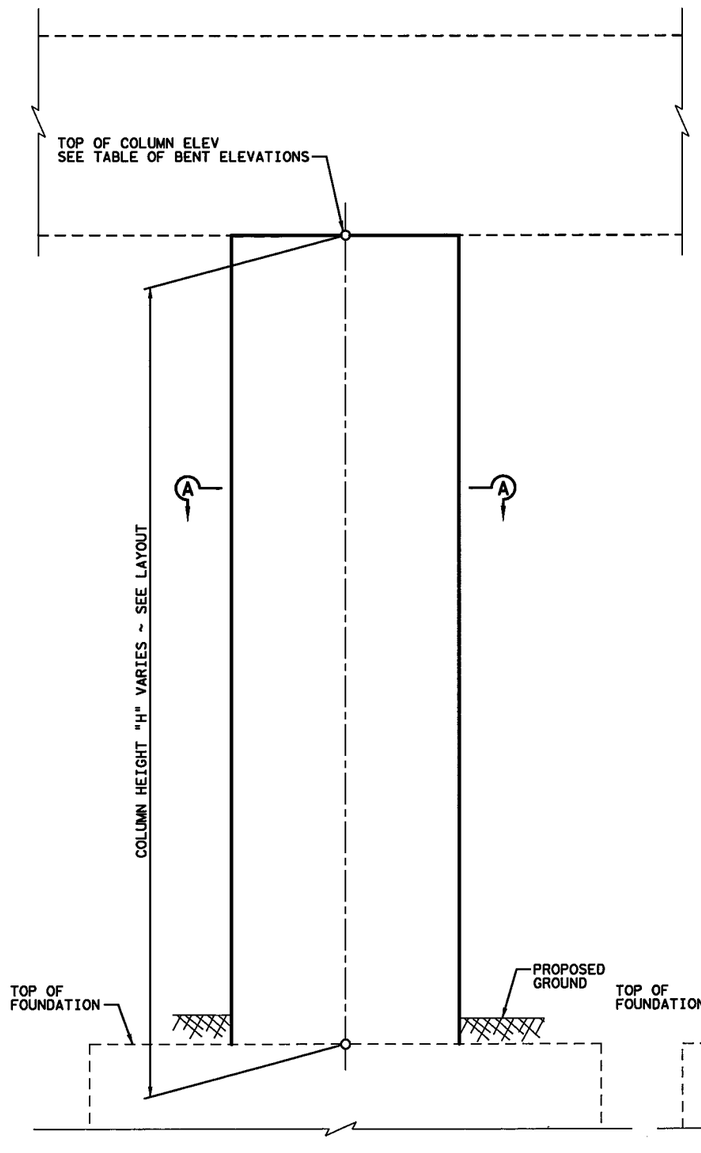

COLUMN GEOMETRY

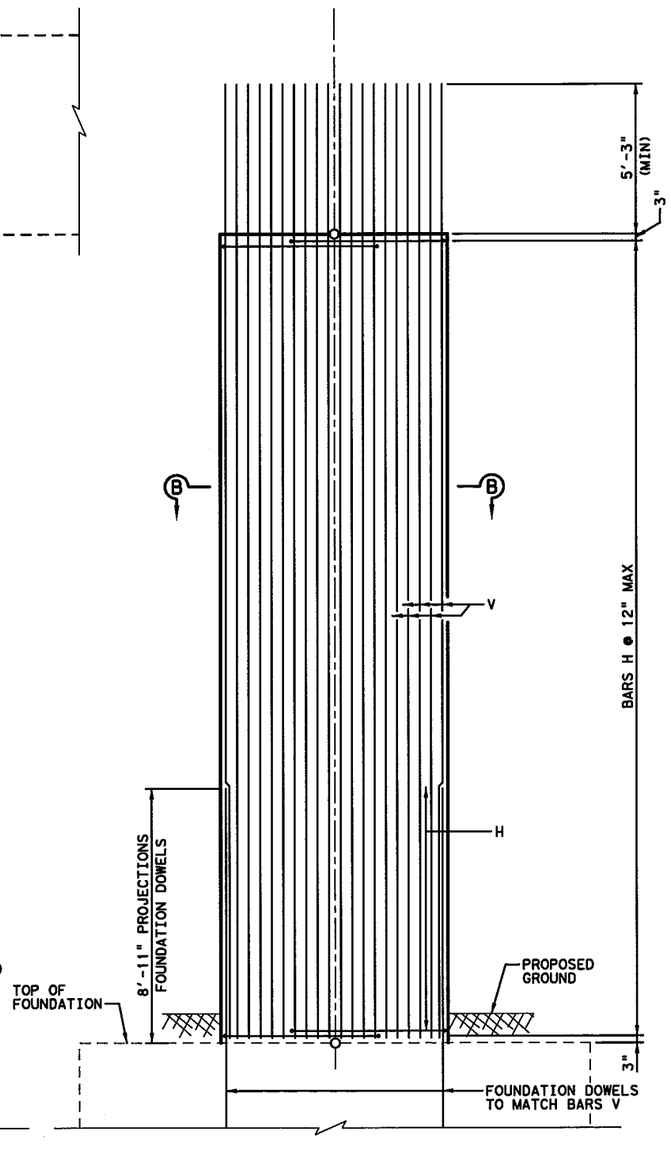

COLUMN REINFORCEMENT DETAILS

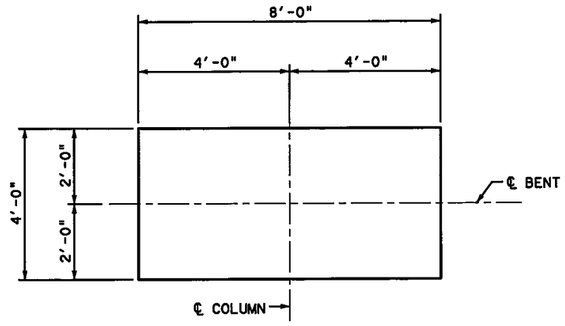

SECTION A-A

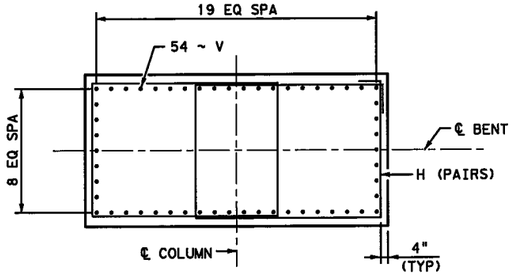

SECTION B-B

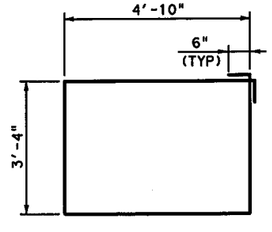

BARS H

NESTOR R. RUBIANO
94294
LICENSED PROFESSIONAL ENGINEER
STATE OF TEXAS
8/29/2012

HL 93 LOADING

PESC P.E. Structural Consultants, Inc.
www.PEStructural.com
TBPE Firm No. F-1475

Texas Department of Transportation
© 2012

IH 35W FROM NORTH TARRANT PKWY TO IH 820

COLUMN DETAILS TYPE B

NB IH 35W TO WB US 287

SCALE: NTS — SHEET 1 OF 1

DESIGN	FED. RD. DIV. NO.	FEDERAL AID PROJECT NO.		HIGHWAY NO.
AEB	6	(SEE TITLE SHEET)		IH 35W
GRAPHICS TLS	STATE	DISTRICT	COUNTY	SHEET NO.
CHECK NRR	TEXAS	FTW	TARRANT	1416
CHECK AB	CONTROL	SECTION	JOB	
	0014	16	255, ETC.	

FILENAME: S3BBR#35N-287W#CO#02.dgn

DRAWING DATE: 7/13/2012

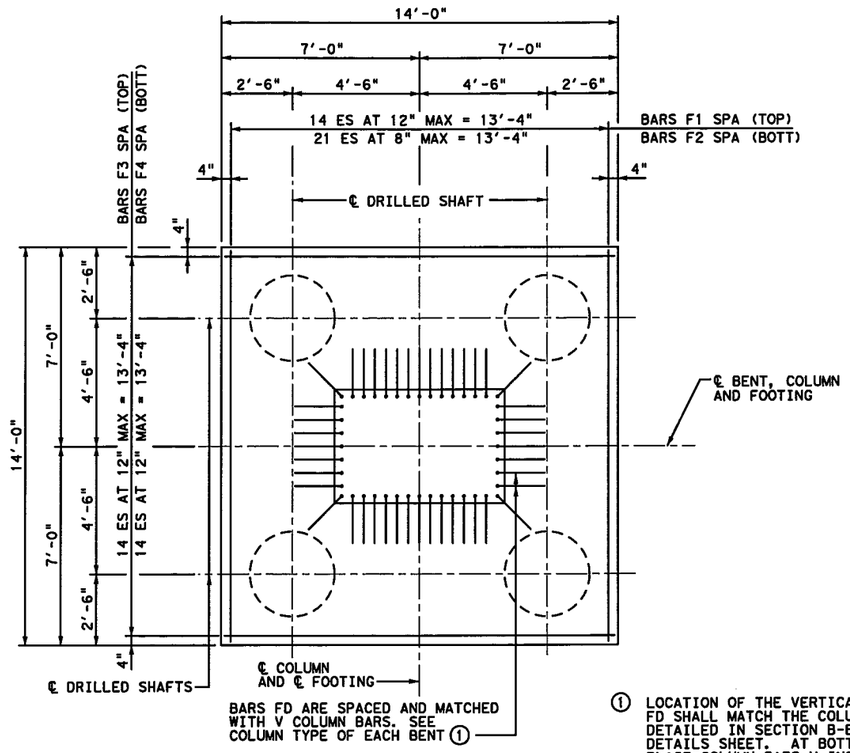

PLAN

① LOCATION OF THE VERTICAL LEGS OF BARS FD SHALL MATCH THE COLUMN BARS V AS DETAILED IN SECTION B-B OF THE COLUMN DETAILS SHEET. AT BOTTOM OF COLUMN, PLACE COLUMN BARS V INSIDE BARS FD AS REQUIRED TO ENSURE 3" MINIMUM CLEAR SPACING BETWEEN LAP SPLICES. AT THE TOP END OF THE LAP SPLICES, BEND COLUMN BARS V OUTWARD AT A SLOPE OF 6 V : 1 H TO BRING COLUMN BARS BACK TO THEIR NORMAL POSITION AS DETAILED IN SECTION B-B OF THE COLUMN DETAILS SHEET.

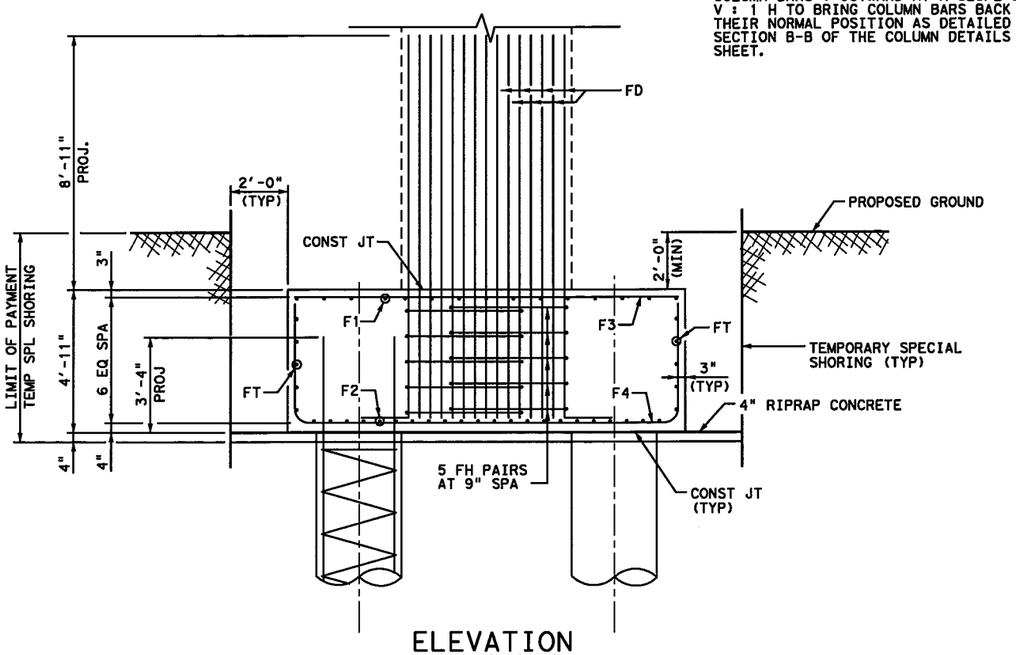

ELEVATION

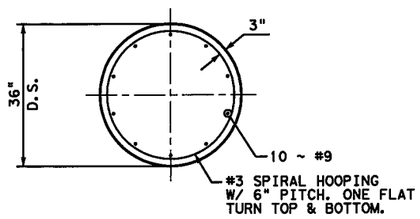

TYPICAL DRILLED SHAFT SECTION

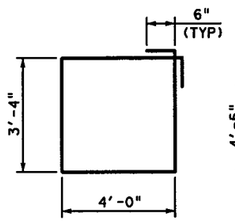

BARS FH

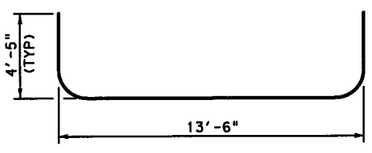

BARS F2 & F4

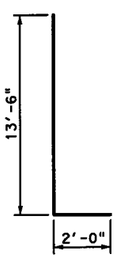

BARS FD

TABLE OF ESTIMATED QUANTITIES
(PER FOOTING)

BAR	NO.	SIZE	LENGTH	WEIGHT
F1	15	#11	13'-8"	1,089
F2	22	#11	22'-4"	2,610
F3	15	#11	13'-8"	1,089
F4	15	#11	22'-4"	1,780
FD	44	#11	15'-6"	3,623
FH	10	#5	15'-8"	163
FT	20	#7	13'-8"	559

REINFORCING STEEL	LB	10,913
CL C CONC (FOOTING) (MASS)	CY	35.7
RIPRAP (CONC) (4 IN)	CY	3.7
TEMPORARY SPL SHORING	SF	521.7

GENERAL NOTES:

1. DESIGNED ACCORDING TO AASHTO LRFD BRIDGE DESIGN SPECIFICATIONS, 5TH EDITION (2010).
2. CLASS "C" CONCRETE STRENGTH F'C = 3,600 PSI.
3. FOOTING AND DRILLED SHAFT REINFORCING BARS SHALL BE GRADE 60.

HL 93 LOADING

PESC P.E. Structural Consultants, Inc.
www.PEStructural.com
TBPE Firm No. F-1475

Texas Department of Transportation
© 2012

IH 35W FROM NORTH TARRANT PKWY TO IH 820

FOOTING DETAILS TYPE A
NB IH 35W TO WB US 287

SCALE: NTS — SHEET 1 OF 1

DESIGN	FED.RD. DIV.NO.	FEDERAL AID PROJECT NO.		HIGHWAY NO.
AEB	6	(SEE TITLE SHEET)		IH 35W
GRAPHICS TLS	STATE	DISTRICT	COUNTY	SHEET NO.
CHECK NRR	TEXAS	FTW	TARRANT	1417
CHECK AB	CONTROL	SECTION	JOB	
	0014	16	255, ETC.	

DRAWING DATE: 7/13/2012 FILENAME: S38BR#35N-287W#FT#01.dgn

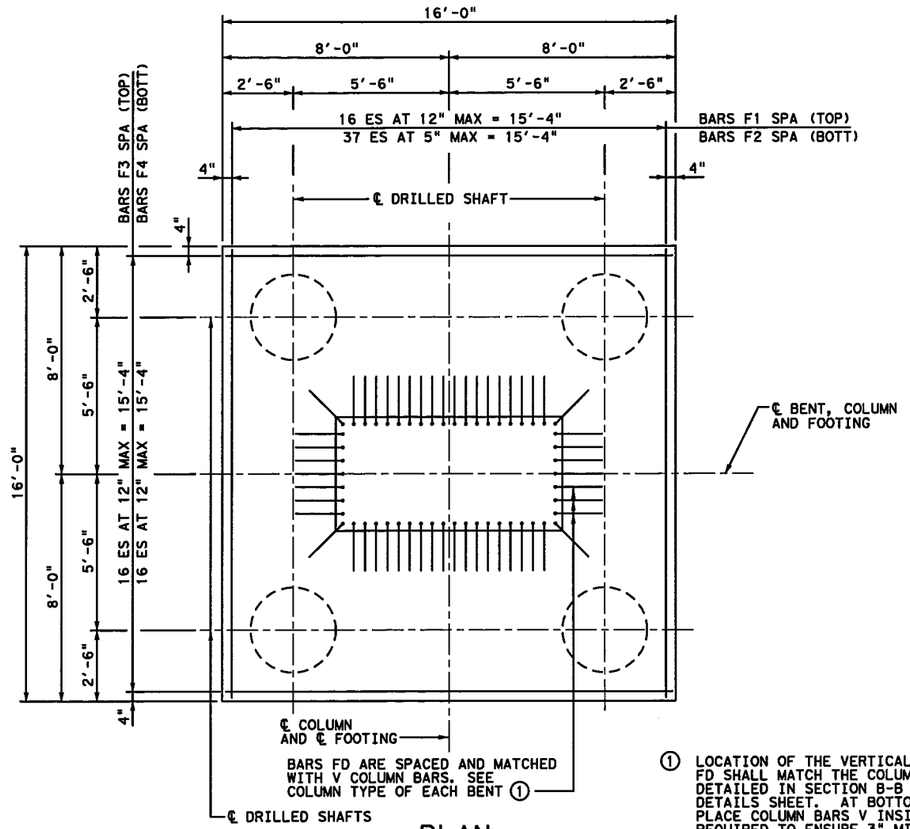

PLAN

① LOCATION OF THE VERTICAL LEGS OF BARS FD SHALL MATCH THE COLUMN BARS V AS DETAILED IN SECTION B-B OF THE COLUMN DETAILS SHEET. AT BOTTOM OF COLUMN, PLACE COLUMN BARS V INSIDE BARS FD AS REQUIRED TO ENSURE 3" MINIMUM CLEAR SPACING BETWEEN LAP SPLICES. AT THE TOP END OF THE LAP SPLICES, BEND COLUMN BARS V OUTWARD AT A SLOPE OF 6 V : 1 H TO BRING COLUMN BARS BACK TO THEIR NORMAL POSITION AS DETAILED IN SECTION B-B OF THE COLUMN DETAILS SHEET.

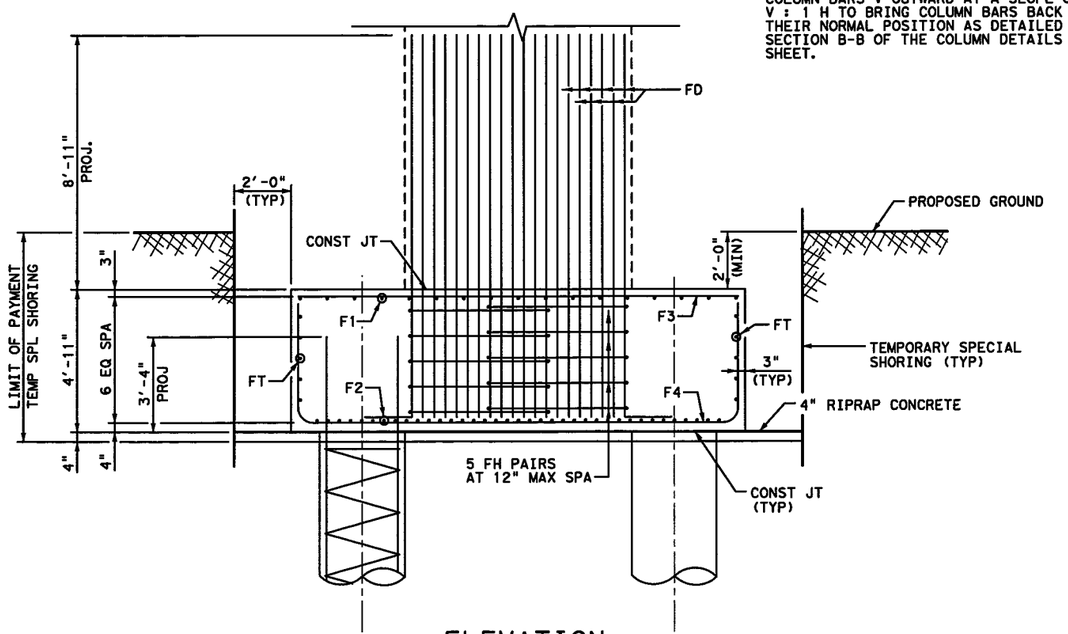

ELEVATION

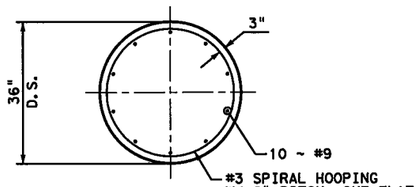

TYPICAL DRILLED SHAFT SECTION

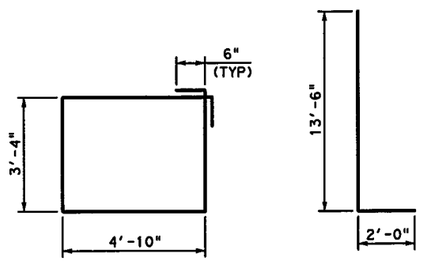

BARS FH BARS FD

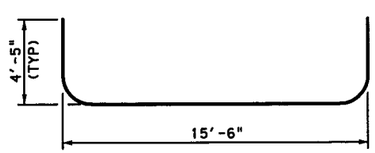

BARS F2 & F4

TABLE OF ESTIMATED QUANTITIES
(PER FOOTING)

BAR	NO.	SIZE	LENGTH	WEIGHT
F1	17	#11	15'-8"	1,415
F2	38	#11	24'-4"	4,913
F3	17	#11	15'-8"	1,415
F4	17	#11	24'-4"	2,198
FD	54	#11	15'-6"	4,447
FH	10	#5	17'-4"	181
FT	20	#7	15'-8"	640

REINFORCING STEEL	LB	15,209
CL C CONC (FOOTING) (MASS)	CY	46.6
RIPRAP (CONC) (4 IN)	CY	4.6
TEMPORARY SPL SHORING	SF	579.6

GENERAL NOTES:

1. DESIGNED ACCORDING TO AASHTO LRFD BRIDGE DESIGN SPECIFICATIONS, 5TH EDITION (2010).
2. CLASS "C" CONCRETE STRENGTH F'C = 3,600 PSI.
3. FOOTING AND DRILLED SHAFT REINFORCING BARS SHALL BE GRADE 60.

STATE OF TEXAS
NESTOR R. RUBIANO
94294
LICENSED PROFESSIONAL ENGINEER
8/29/2012

HL 93 LOADING

P.E. Structural Consultants, Inc.
www.PEStructural.com
TBPE Firm No. F-1475

Texas Department of Transportation
© 2012

IH 35W FROM NORTH TARRANT PKWY TO IH 820

FOOTING DETAILS TYPE B

NB IH 35W TO WB US 287

SCALE: NTS — SHEET 1 OF 1

DESIGN	FED. RD. DIV. NO.	FEDERAL AID PROJECT NO.		HIGHWAY NO.
AEB	6	(SEE TITLE SHEET)		IH 35W
GRAPHICS TLS	STATE	DISTRICT	COUNTY	SHEET NO.
CHECK NRR	TEXAS	FTW	TARRANT	1418
CHECK AB	CONTROL	SECTION	JOB	
	0014	16	255, ETC.	

FILENAME: S3BBR*35N-287W*FT*02.dgn
DRAWING DATE: 7/13/2012

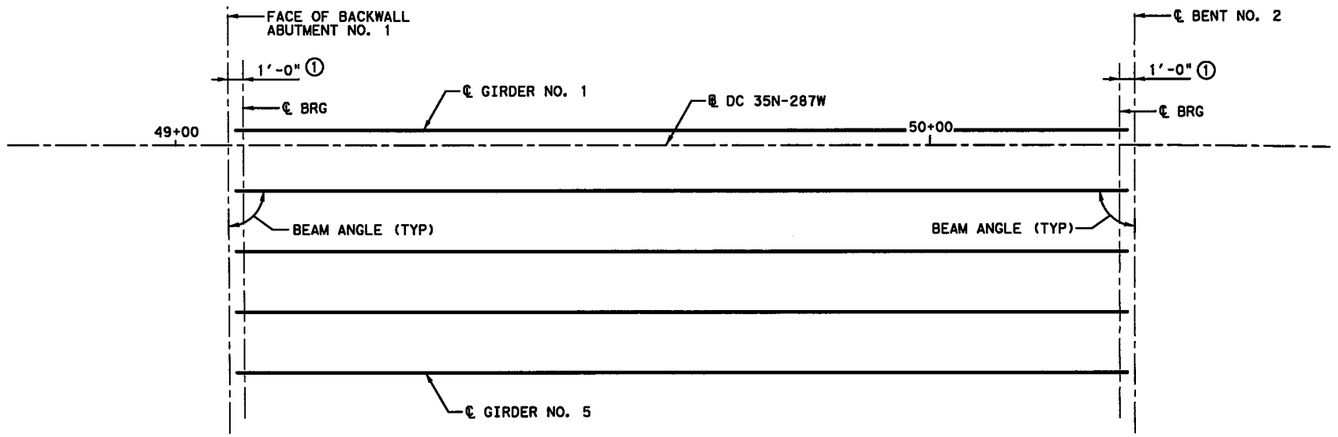

SPAN 1
(TX54 GIRDERS)

① SEE IGEB STANDARD FOR ORIENTATION OF DIMENSION.

② GIRDER LENGTHS SHOWN ARE BOTTOM GIRDER FLANGE LENGTHS WITH ADJUSTMENTS MADE FOR BEAM SLOPE.

BENT REPORT

ABUT NO. 1 (S 39 26 53.78 W)
DISTANCE BETWEEN STATION LINE AND BEAM 1 2.000 L

			BEAM SPAC. (C.L. BENT)	BEAM ANGLE D M S
SPAN 1	BEAM	1	0.000	89 59 22
	BEAM	2	8.000	89 59 23
	BEAM	3	8.000	89 59 23
	BEAM	4	8.000	89 59 23
	BEAM	5	8.000	89 59 23
	TOTAL		32.000	

BENT NO. 2 (S 39 42 50.89 W)
DISTANCE BETWEEN STATION LINE AND BEAM 1 2.000 L

			BEAM SPAC. (C.L. BENT)	BEAM ANGLE D M S
SPAN 1	BEAM	1	0.000	89 44 39
	BEAM	2	8.000	89 44 39
	BEAM	3	8.000	89 44 39
	BEAM	4	8.000	89 44 39
	BEAM	5	8.000	89 44 39
	TOTAL		32.000	

BEAM REPORT

BEAM REPORT, SPAN 1

		HORIZONTAL DISTANCE C-C BENT	C-C BRG.	TRUE DISTANCE BOT. BM. FLG. ②	BEAM SLOPE
BEAM	1	120.009	118.009	119.53	0.0193
BEAM	2	119.972	117.972	119.50	0.0197
BEAM	3	119.935	117.935	119.46	0.0200
BEAM	4	119.898	117.898	119.42	0.0204
BEAM	5	119.861	117.861	119.39	0.0207

STATE OF TEXAS
NESTOR R. RUBIANO
94294
LICENSED
PROFESSIONAL ENGINEER
7/06/2012

HL 93 LOADING

PESC P.E. Structural Consultants, Inc.
www.PEStructural.com
TBPE Firm No. F-1475

Texas Department of Transportation
© 2012

IH 35W FROM NORTH TARRANT PKWY TO IH 820

GIRDER LAYOUT (SPAN 1)

NB IH 35W TO WB US 287

SCALE: NTS SHEET 1 OF 1

DESIGN	FED.RD. DIV.NO.	FEDERAL AID PROJECT NO.		HIGHWAY NO.
AEB	6	(SEE TITLE SHEET)		IH 35W
GRAPHICS TLS	STATE	DISTRICT	COUNTY	SHEET NO.
CHECK NRR	TEXAS	FTW	TARRANT	1419
CHECK AB	CONTROL	SECTION	JOB	
	0014	16	255, ETC.	

DRAWING DATE: 7/13/2012 FILENAME: S3BBR+35N-287W+GF+01.dgn

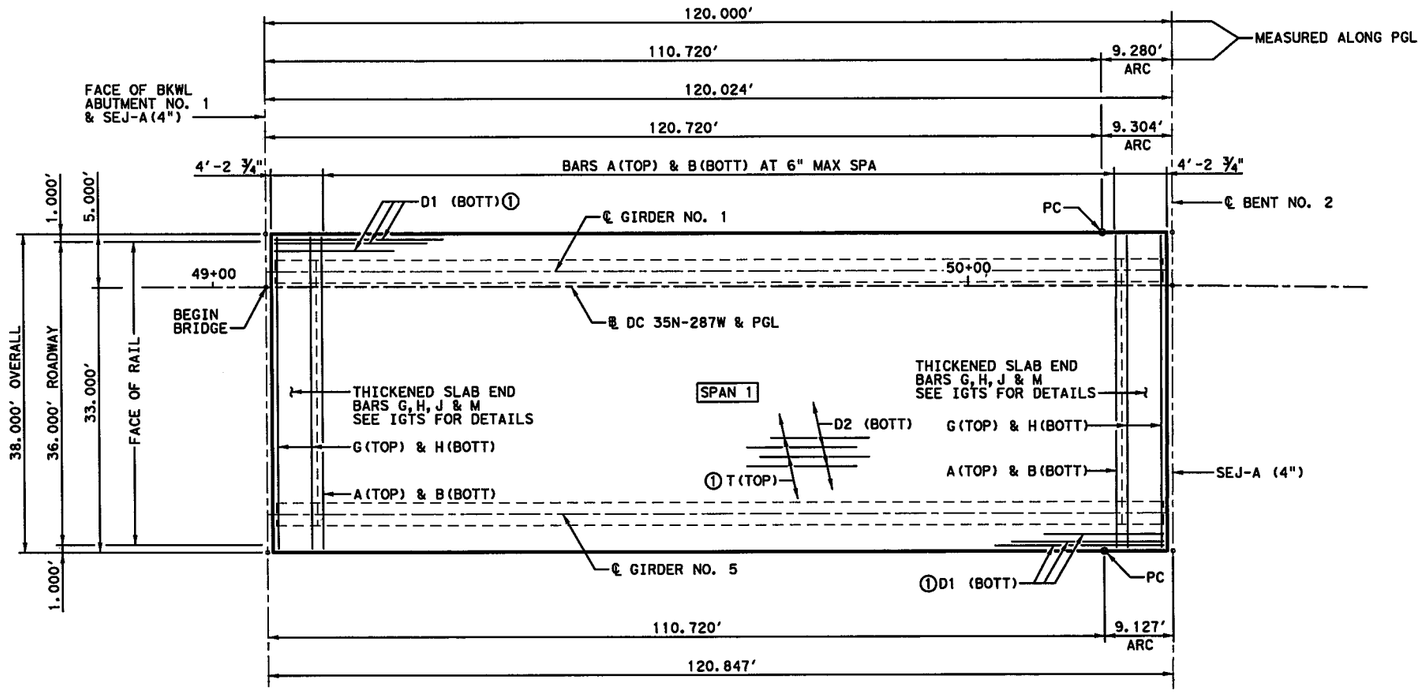

PLAN

① 2" END COVER ON BARS D1 AND T.

STATE OF TEXAS
NESTOR R. RUBIANO
94294
LICENSED
PROFESSIONAL ENGINEER

7/06/2012

HL 93 LOADING

P.E. Structural Consultants, Inc.
www.PEStructural.com
TBPE Firm No. F-1475

Texas Department of Transportation
© 2012

IH 35W FROM NORTH TARRANT PKWY TO IH 820

120.00' PRESTRESSED CONCRETE I-GIRDER UNIT

NB IH 35W TO WB US 287

SCALE: NTS

SHEET 1 OF 2

DESIGN	FED. RD. DIV. NO.	FEDERAL AID PROJECT NO.		HIGHWAY NO.
AEB	6	(SEE TITLE SHEET)		IH 35W
GRAPHICS	STATE	DISTRICT	COUNTY	SHEET NO.
TLS	TEXAS	FTW	TARRANT	
CHECK	CONTROL	SECTION	JOB	1420
NRR	0014	16	255, ETC.	
CHECK				
AB				

DRAWING DATE: 7/13/2012 FILENAME: S3BBR#35N-287W#PB#01.dgn

SPAN NO.	GIRDER NO.	"A" FT	"B" FT
1	1	0.140	0.199
	2	0.158	0.224
	3 & 4	0.157	0.224
	5	0.139	0.197

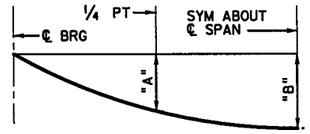

DEAD LOAD DEFLECTION DIAGRAM

CALCULATED DEFLECTIONS SHOWN ARE DUE TO THE CONCRETE SLAB ON INTERIOR GIRDERS ONLY (EC = 5000 KSI). ADJUST VALUES AS REQUIRED FOR EXTERIOR GIRDERS AND IF OPTIONAL SLAB FORMING IS USED. THESE VALUES MAY REQUIRE FIELD VERIFICATION.

TABLE OF SECTION DEPTHS

SPAN NO.	GIRDER NO.	"X" AT ℄ BRG	"Y" AT ℄ BRG	②"Z" AT ℄ SPAN
1	1	1'-½"	5'-6½"	10"
	2	1'-½"	5'-6½"	10¼"
	3 & 4	1'-½"	5'-6½"	10⅛"
	5	1'-½"	5'-6½"	9⅞"

②THEORETICAL DIMENSION

BAR TABLE

BAR	SIZE
A	#5
B	#5
D	#5
G	#5
H	#5
J	#5
M	#5
T	#4

TABLE OF ESTIMATED QUANTITIES

SPAN	REINF CONC SLAB	PRESTR CONC I-GIRDERS (TX54) ④	CL S CONC (HPC)	REINFORCING STEEL ③
NO.	SF	LF	CY	LB
1	4,558	597.30	132.6	29,627

③REINFORCING STEEL WEIGHT IS CALCULATED USING AN APPROXIMATE FACTOR OF 6.5 LBS PER SQ FT.

④LENGTHS SHOWN ARE BOTTOM OF GIRDER FLANGE LENGTHS WITH ADJUSTMENTS MADE FOR BEAM SLOPE. SEE GIRDER LAYOUT FOR GIRDER LENGTHS.

GENERAL NOTES:

1. DESIGNED ACCORDING TO AASHTO LRFD BRIDGE DESIGN SPECIFICATIONS, 5TH EDITION (2010).
2. CLASS "S"(HPC) CONCRETE STRENGTH F'C = 4,000 PSI.
3. ALL REINFORCING SHALL BE GRADE 60 AND EPOXY COATED.
4. SEE PCP OR PMDF STANDARDS FOR DETAILS AND QUANTITY ADJUSTMENTS IF EITHER OF THESE OPTIONS ARE USED.
5. SEE IGTS STANDARD FOR THICKENED SLAB END DETAILS.
6. SEE IGMS STANDARD FOR MISCELLANEOUS SLAB DETAILS.
7. SEE RAIL STANDARD FOR RAIL ANCHORAGE IN SLAB.
8. BAR LAPS, WHERE REQUIRED, TO BE AS FOLLOWS:
   #4 = 2'-1"
   #5 = 2'-7"

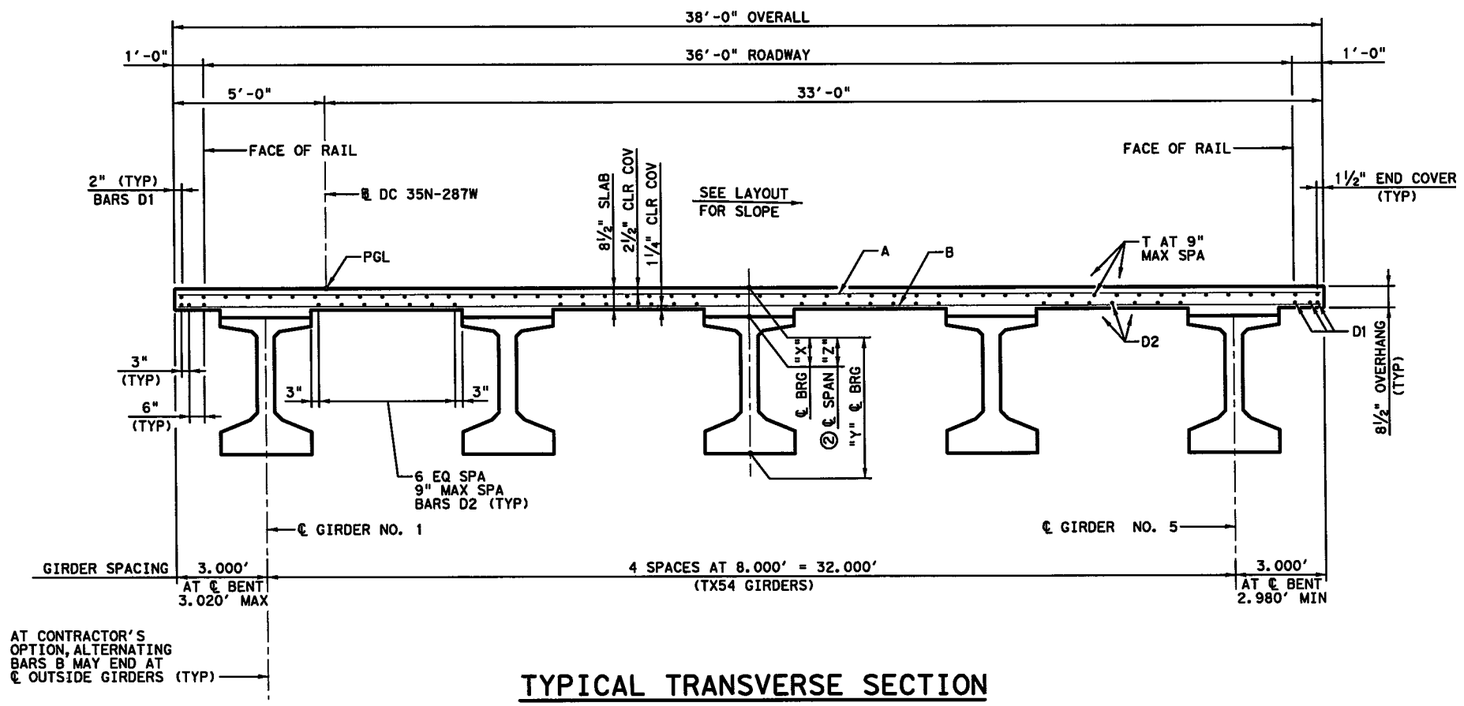

TYPICAL TRANSVERSE SECTION

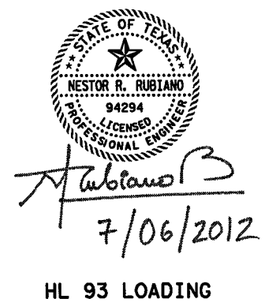

HL 93 LOADING

P.E. Structural Consultants, Inc.
www.PEStructural.com
TBPE Firm No. F-1475

Texas Department of Transportation
© 2012

IH 35W FROM NORTH TARRANT PKWY TO IH 820

120.00' PRESTRESSED CONCRETE I-GIRDER UNIT

NB IH 35W TO WB US 287

SCALE: NTS — SHEET 2 OF 2

DESIGN	FED.RD. DIV.NO.	FEDERAL AID PROJECT NO.		HIGHWAY NO.
AEB	6	(SEE TITLE SHEET)		IH 35W
GRAPHICS TLS	STATE	DISTRICT	COUNTY	SHEET NO.
CHECK NRR	TEXAS	FTW	TARRANT	1421
CHECK AB	CONTROL	SECTION	JOB	
	0014	16	255, ETC.	

FILENAME: S3BBR*35N-287W*PB*02.dgn

DRAWING DATE: 7/13/2012

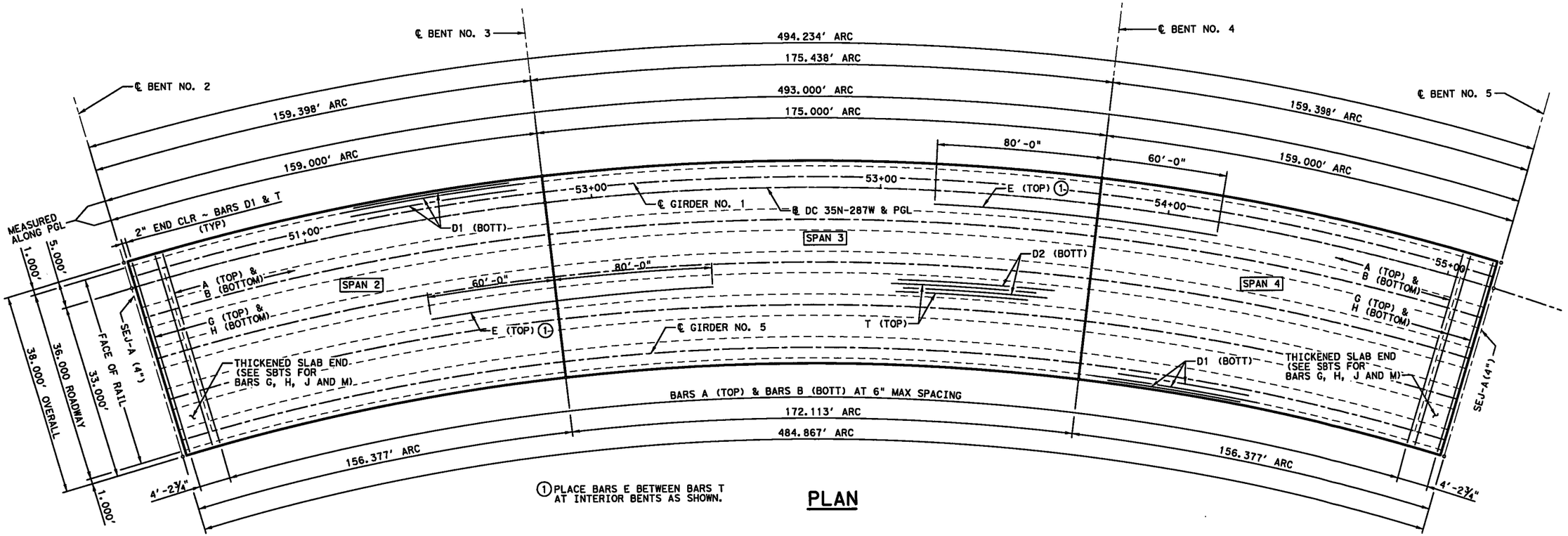

(1) PLACE BARS E BETWEEN BARS T AT INTERIOR BENTS AS SHOWN.

PLAN

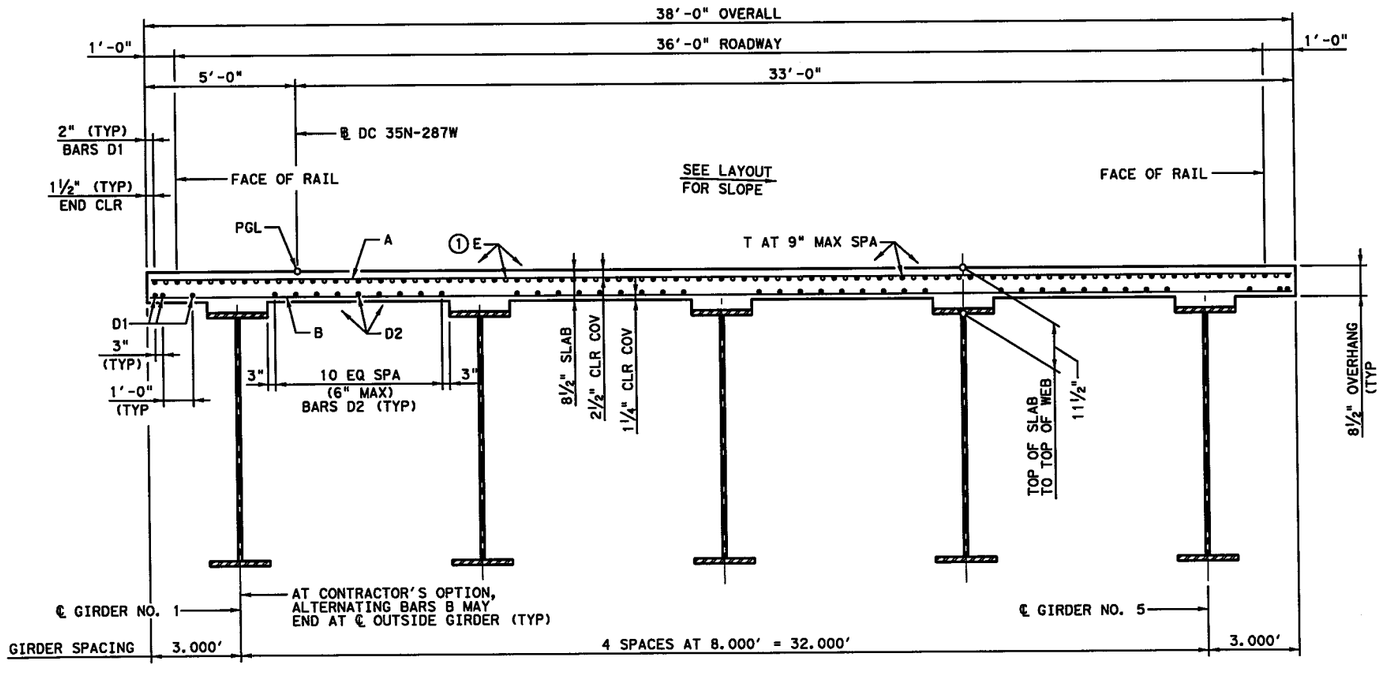

TYPICAL RADIAL SECTION

GENERAL NOTES:

1. DESIGNED ACCORDING TO AASHTO LRFD BRIDGE DESIGN SPECIFICATIONS, 5TH EDITION (2010).
2. CLASS "S" (HPC) CONCRETE STRENGTH F'C = 4,000 PSI.
3. ALL REINFORCING SHALL BE GRADE 60 AND EPOXY COATED.
4. SEE SBTS STANDARD FOR THICKENED SLAB END DETAILS AND QUANTITY ADJUSTMENTS.
5. PRESTRESSED CONCRETE PANELS (PCP) SHALL NOT BE PERMITTED.
6. SEE PMDF STANDARD FOR OPTIONAL STAY IN PLACE FORMING DETAILS.
7. SEE SBMS STANDARD FOR MISCELLANEOUS SLAB DETAILS.
8. SEE SGEB STANDARD FOR BEARING DETAILS.
9. SEE RAIL STANDARD FOR RAIL ANCHORAGE IN SLAB.
10. BAR LAPS, WHERE REQUIRED, TO BE AS FOLLOWS:
    #4 = 2'-1"
    #5 = 2'-7"

HL 93 LOADING

P.E. Structural Consultants, Inc.
www.PEStructural.com
TBPE Firm No. F-1475

Texas Department of Transportation

© 2012

STATE OF TEXAS
NESTOR R. RUBIANO
94294
LICENSED PROFESSIONAL ENGINEER

7/06/2012

IH 35W FROM NORTH TARRANT PKWY TO IH 820

493.00' CONTINUOUS PLATE GIRDER UNIT

NB IH 35W TO WB US 287

SCALE: NTS — SHEET 1 OF 6

DESIGN	FED.RD. DIV.NO.	FEDERAL AID PROJECT NO.		HIGHWAY NO.
AEB	6	(SEE TITLE SHEET)		IH 35W
GRAPHICS TLS	STATE	DISTRICT	COUNTY	SHEET NO.
CHECK NRR	TEXAS	FTW	TARRANT	1422
CHECK AB	CONTROL	SECTION	JOB	
	0014	16	255, ETC.	

FILENAME: S3BBR#35N-287W#SG#01.dgn

DRAWING DATE: 7/13/2012

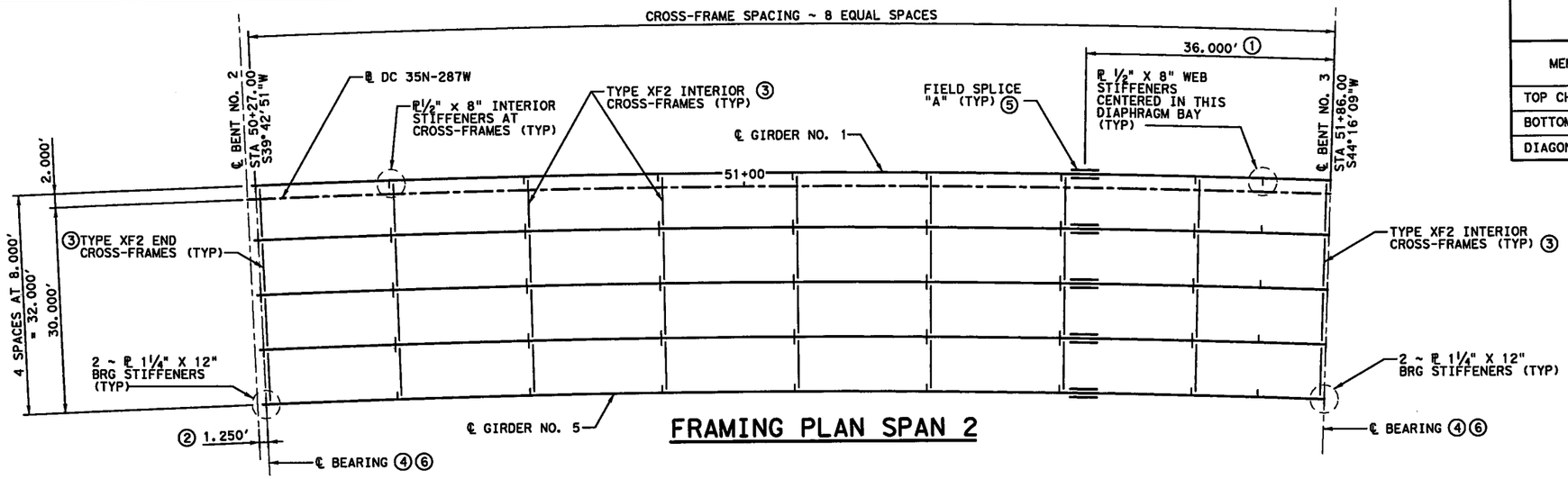

FRAMING PLAN SPAN 2

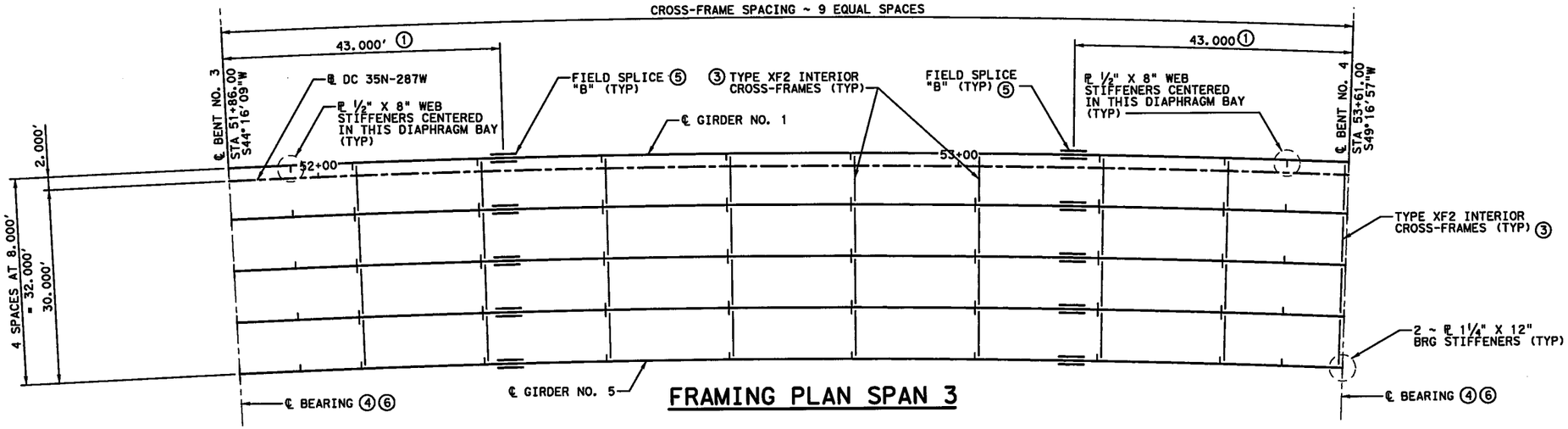

FRAMING PLAN SPAN 3

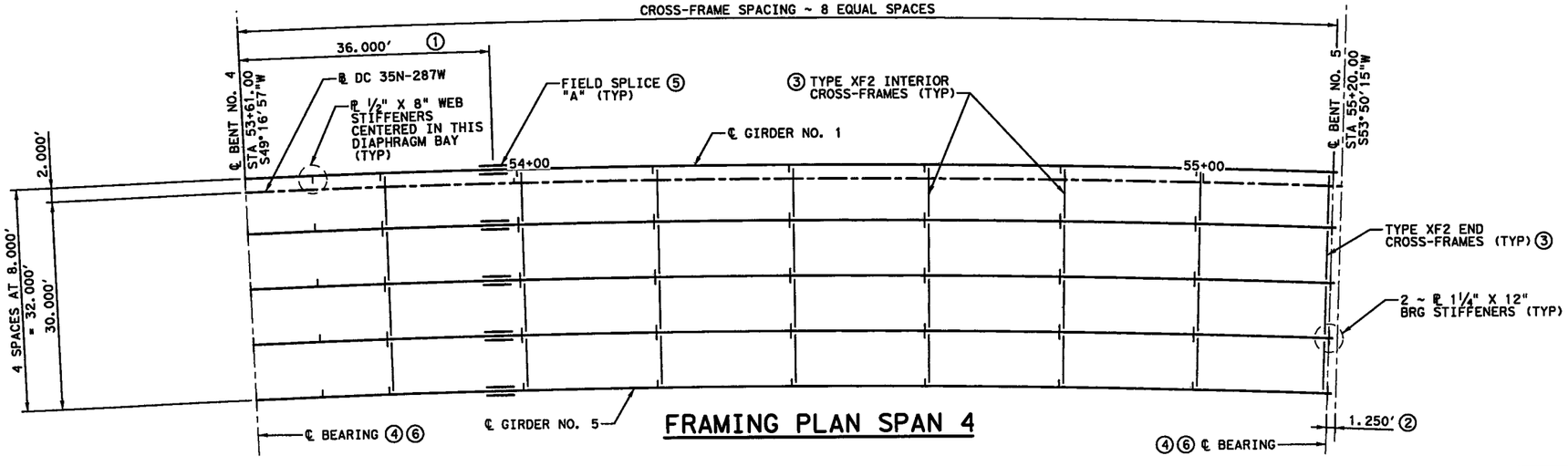

FRAMING PLAN SPAN 4

TABLE OF CROSS-FRAMES MEMBER SIZES ③

MEMBER	TYPE "XF2" END CROSS-FRAMES	TYPE "XF2" INTERIOR CROSS-FRAMES
TOP CHORD	5" × 5" × ½"	5" × 5" × ½"
BOTTOM CHORD	5" × 5" × ½"	5" × 5" × ½"
DIAGONALS	5" × 5" × ½"	5" × 5" × ½"

TABLE OF GIRDER RADII

GIRDER #1	2002.000'
DC 35N-287W	2000.000'
GIRDER #2	1994.000'
GIRDER #3	1986.000'
GIRDER #4	1978.000'
GIRDER #5	1970.000'

① MEASURED ALONG ℄ DC 35N-287W.

② MEASURED PERPENDICULAR TO ℄ BENT.

③ SEE SGMD STANDARDS FOR ADDITIONAL DETAILS.

④ SEE SGEB STANDARD FOR BEARING DETAILS.

⑤ SEE BOLTED FIELD SPLICE DETAILS ON SHEETS 4 AND 5 OF 6.

⑥ SEE GIRDER ELEVATIONS ON SHEET 3 OF 6 FOR BEARING TYPES.

STATE OF TEXAS
NESTOR R. RUBIANO
94294
LICENSED
PROFESSIONAL ENGINEER

7/06/2012

HL 93 LOADING

PESC
P.E. Structural Consultants, Inc.
www.PEStructural.com
TBPE Firm No. F-1475

Texas Department of Transportation
© 2012

IH 35W FROM NORTH TARRANT PKWY TO IH 820

493.00' CONTINUOUS PLATE GIRDER UNIT

NB IH 35W TO WB US 287

SCALE: NTS — SHEET 2 OF 6

DESIGN	FED.RD. DIV.NO.	FEDERAL AID PROJECT NO.		HIGHWAY NO.
AEB	6	(SEE TITLE SHEET)		IH 35W
GRAPHICS	STATE	DISTRICT	COUNTY	SHEET NO.
TLS				
CHECK	TEXAS	FTW	TARRANT	
NRR	CONTROL	SECTION	JOB	1423
CHECK	0014	16	255, ETC.	
AB				

FILENAME: S3BBR*35N-287W*SG*02.dgn

DRAWING DATE: 7/13/2012

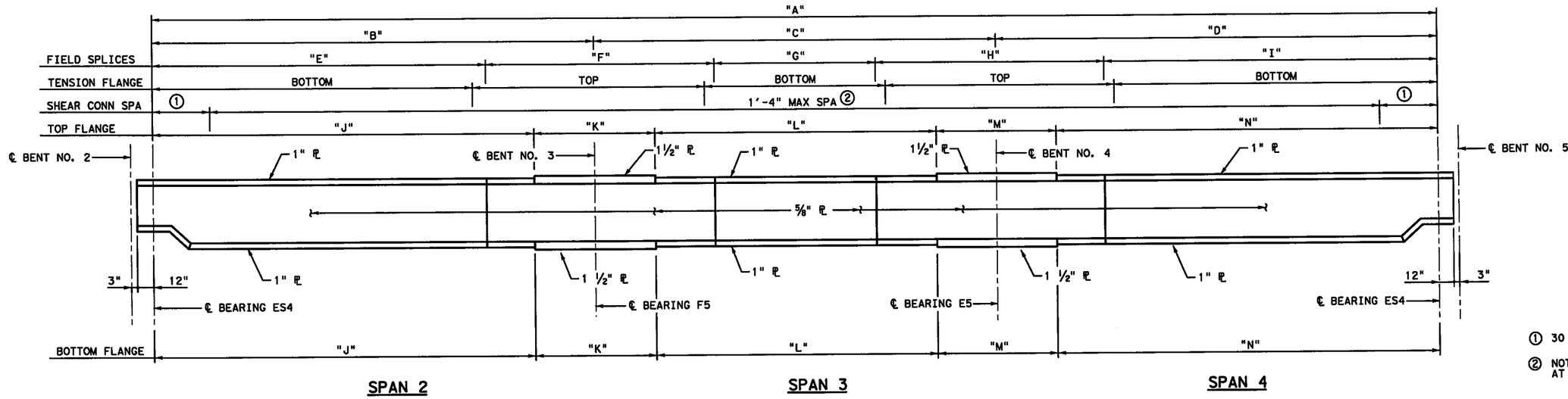

① 30 SPA = 15'-0"

② NOTE OMISSION OF STUDS AT OPTIONAL BOLTED SPLICES.

ALL WEB PLATES ARE 76" DEEP EXCEPT AT DAPPED ENDS. ALL FLANGE PLATES ARE 24" WIDE.

ELEVATION ~ GIRDER NO. 1 & 2

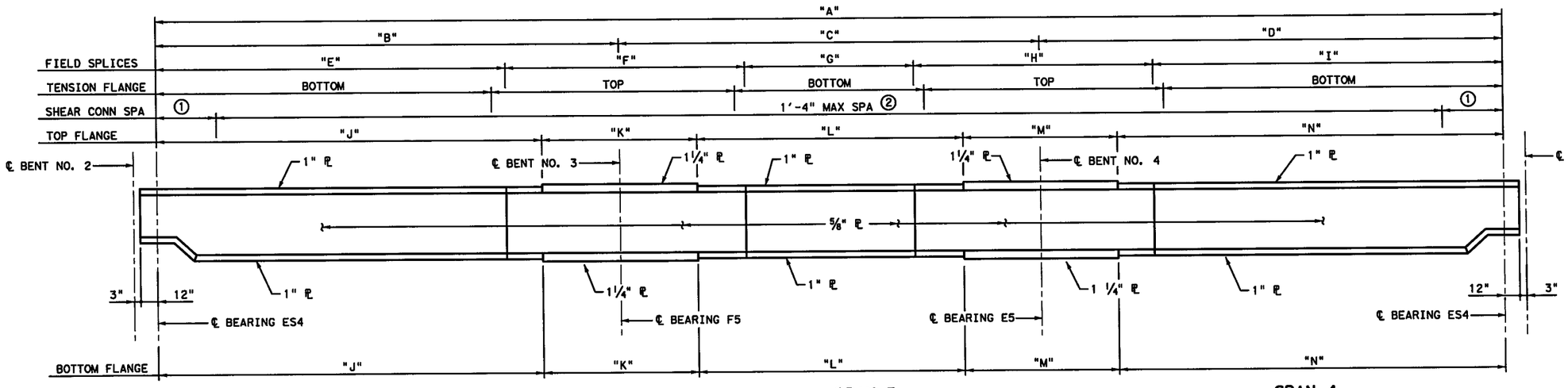

HL 93 LOADING

ELEVATION ~ GIRDER NO. 3 - 5

TABLE OF GIRDER DIMENSIONS				
GIRDER NO.	"A"	"B"	"C"	"D"
1	490.993'	157.909'	175.175'	157.909'
2	489.021'	157.273'	174.475'	157.273'
3	487.049'	156.637'	173.775'	156.637'
4	485.077'	156.001'	173.075'	156.001'
5	483.105'	155.365'	172.375'	155.365'

TABLE OF GIRDER DIMENSIONS											
GIRDER NO.	"E"	"F"	"G"	"H"	"I"	"J"	"K"	"L"	"M"	"N"	RADIUS
1	121.873'	79.079'	89.089'	79.079'	121.873'	142.909'	30.000'	145.175'	30.000'	142.909'	2002.000'
2	121.381'	78.763'	88.733'	78.763'	121.381'	142.273'	30.000'	144.475'	30.000'	142.273'	1994.000'
3	120.889'	78.447'	88.377'	78.447'	120.889'	146.637'	20.000'	153.775'	20.000'	146.637'	1986.000'
4	120.397'	78.131'	88.021'	78.131'	120.397'	146.001'	20.000'	153.075'	20.000'	146.001'	1978.000'
5	119.905'	77.815'	87.665'	77.815'	119.905'	145.365'	20.000'	152.375'	20.000'	145.365'	1970.000'

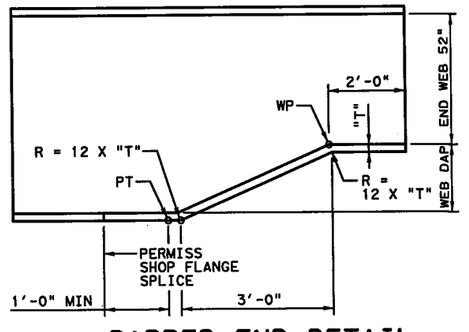

DAPPED END DETAIL

STATE OF TEXAS
NESTOR R. RUBIANO
94294
LICENSED
PROFESSIONAL ENGINEER

7/06/2012

P.E. Structural Consultants, Inc.
www.PEStructural.com
TBPE Firm No. F-1475

Texas Department of Transportation
© 2012

IH 35W FROM NORTH TARRANT PKWY TO IH 820

493.00' CONTINUOUS PLATE GIRDER UNIT

NB IH 35W TO WB US 287

SCALE: NTS

SHEET 3 OF 6

DESIGN	FED.RD. DIV.NO.	FEDERAL AID PROJECT NO.		HIGHWAY NO.
AEB	6	(SEE TITLE SHEET)		IH 35W
GRAPHICS TLS	STATE	DISTRICT	COUNTY	SHEET NO.
CHECK NRR	TEXAS	FTW	TARRANT	1424
CHECK AB	CONTROL	SECTION	JOB	
	0014	16	255, ETC.	

FILENAME: S3BBR#35N-287W#SG#03.dgn

DRAWING DATE: 7/13/2012

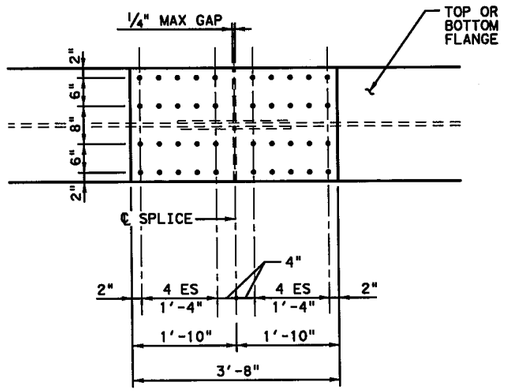

PLAN

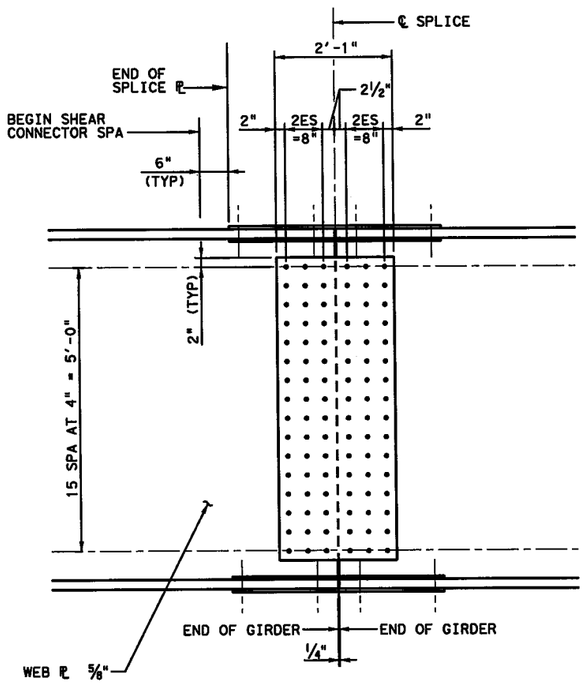

ELEVATION

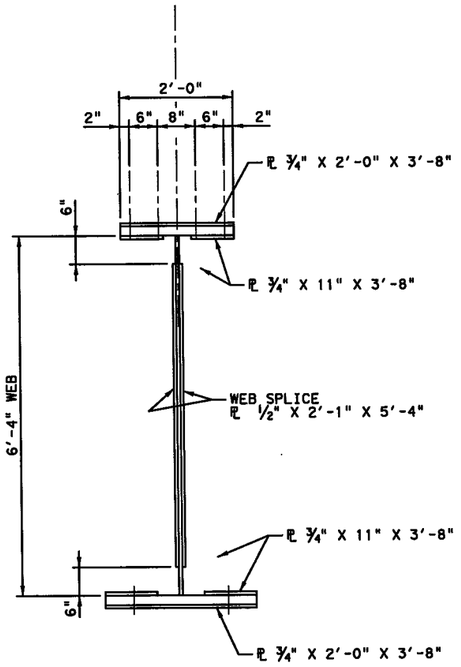

SECTION

OPTIONAL BOLTED FIELD SPLICE "A"

BOLTED FIELD SPLICE SHOWN SHALL BE USED.
EACH SPLICE WEIGHT = 1,700 LBS.

OPTIONAL BOLTED FIELD SPLICE NOTES:

1. ALL BOLTS SHALL BE 1" DIA A325 WITH ONE HARDENED WASHER EACH AND SHALL BE TIGHTENED IN ACCORDANCE WITH ITEM 447. ALL HOLES SHALL BE 1 1/16" DIA.
2. ALL SPLICE PLATES SHALL CONFORM TO A709 GRADE 50.
3. ALL SPLICE PLATES ARE CLASSIFIED AS TENSION COMPONENTS AND SHALL CONFORM TO ITEM 442.2.A.1.
4. BOLTS SHALL BE INSTALLED WITH HEADS ON FASCIA SIDE OF WEB FOR GIRDERS NO. 1 AND NO. 5. BOTTOM FLANGE SPLICE BOLTS SHALL BE INSTALLED WITH HEADS FACING DOWN.
5. STRUCTURAL STEEL PAY WEIGHT SHALL BE BASED ON WELDED FIELD SPLICES REGARDLESS OF SPLICE TYPE CHOSEN.
6. CLASS A SURFACE CONDITION WAS ASSUMED IN THE DESIGN OF FIELD SPLICES (SLIP COEFFICIENT 0.33).
7. PREPARE FAYING SURFACES AS PER ITEMS 441, 446 AND 447. ENSURE THE REQUIRED FINISH EXISTS AT THE TIME OF BOLTING. DO NOT WIRE BRUSH UNPAINTED FAYING SURFACES.

STATE OF TEXAS
NESTOR R. RUBIANO
94294
LICENSED PROFESSIONAL ENGINEER

7/06/2012

HL 93 LOADING

PESC P.E. Structural Consultants, Inc.
www.PEStructural.com
TBPE Firm No. F-1475

Texas Department of Transportation
© 2012

IH 35W FROM NORTH TARRANT PKWY TO IH 820

493.00' CONTINUOUS PLATE GIRDER UNIT

NB IH 35W TO WB US 287

SCALE: NTS — SHEET 4 OF 6

DESIGN	FED.RD. DIV.NO.	FEDERAL AID PROJECT NO.		HIGHWAY NO.
AEB	6	(SEE TITLE SHEET)		IH 35W
GRAPHICS	STATE	DISTRICT	COUNTY	SHEET NO.
TLS	TEXAS	FTW	TARRANT	1425
CHECK NRR	CONTROL	SECTION	JOB	
CHECK AB	0014	16	255, ETC.	

DRAWING DATE: 7/13/2012 FILENAME: S3BBR#35N-287W#SG#04.dgn

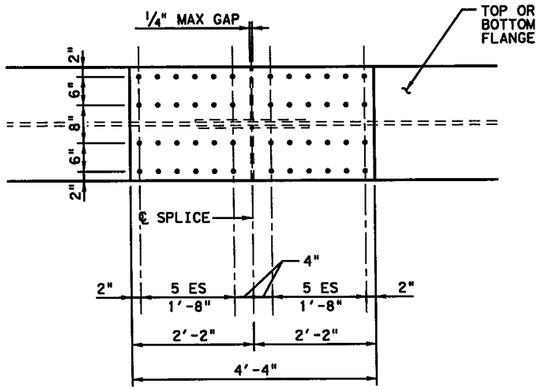

PLAN

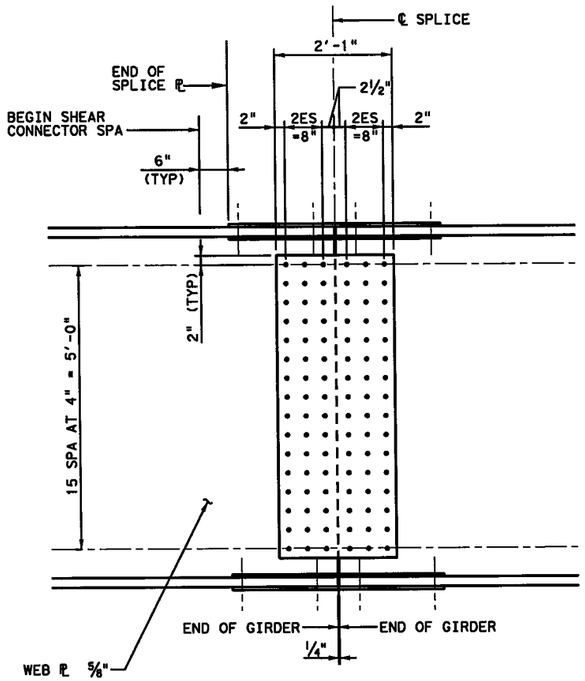

ELEVATION

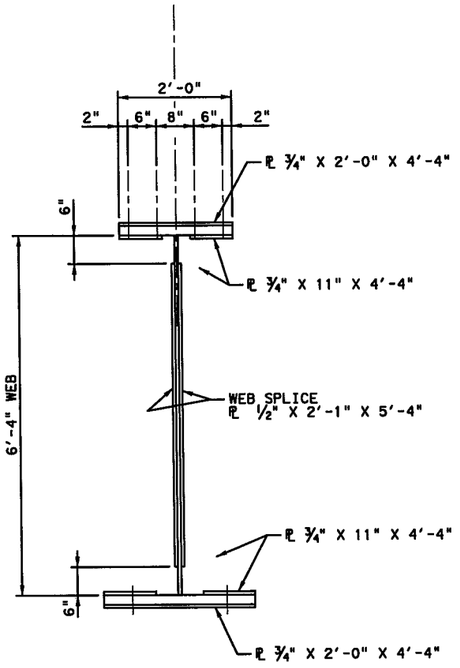

SECTION

OPTIONAL BOLTED FIELD SPLICE "B"

BOLTED FIELD SPLICE SHOWN SHALL BE USED.
EACH SPLICE WEIGHT = 1,750 LBS.

STATE OF TEXAS
NESTOR R. RUBIANO
94294
LICENSED
PROFESSIONAL ENGINEER

7/06/2012

HL 93 LOADING

P.E. Structural Consultants, Inc.
www.PEStructural.com
TBPE Firm No. F-1475

Texas Department of Transportation
© 2012

IH 35W FROM NORTH TARRANT PKWY TO IH 820

493.00' CONTINUOUS PLATE GIRDER UNIT

NB IH 35W TO WB US 287

SCALE: NTS — SHEET 5 OF 6

DESIGN	FED. RD. DIV. NO.	FEDERAL AID PROJECT NO.		HIGHWAY NO.
AEB	6	(SEE TITLE SHEET)		IH 35W
GRAPHICS TLS	STATE	DISTRICT	COUNTY	SHEET NO.
CHECK NRR	TEXAS	FTW	TARRANT	1426
CHECK AB	CONTROL	SECTION	JOB	
	0014	16	255, ETC.	

FILENAME: S3BBR*35N-287W*SG*05.dgn
DRAWING DATE: 7/13/2012

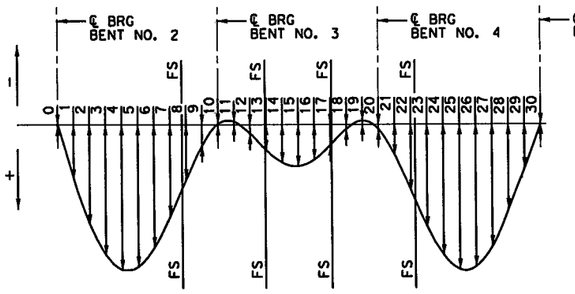

DEAD LOAD DEFLECTION DIAGRAM

FS = FIELD SPLICE

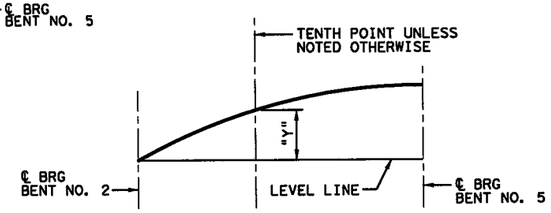

WEB CAMBER DIAGRAM

WEBS MAY BE CUT ON STRAIGHT LINES BETWEEN ORDINATES SHOWN OR TO A SMOOTH CURVE AT THE FABRICATOR'S OPTION. ORDINATES SHOWN INCLUDE TOTAL DEAD LOAD DEFLECTION AND VERTICAL CURVE CORRECTIONS.

TABLE OF ESTIMATED QUANTITIES

SPAN	REINF CONC SLAB	REINFORCING STEEL ①	CL S CONC (HPC)	STRUCTURAL STEEL (PL GIRDER)
NO.	SF	LB	CY	LB
2	6,000	42,000	166.9	295,200
3	6,603	46,221	183.7	325,100
4	6,000	42,000	167.0	295,200
TOTAL	18,603	130,221	517.6	915,500

① REINFORCING STEEL WEIGHT IS CALCULATED USING AN APPROXIMATE FACTOR OF 7.0 LBS PER SQ FT.

PLATE GIRDER FABRICATION NOTES:

1. ALL STRUCTURAL STEEL INCLUDING STIFFENERS AND DIAPHRAGMS SHALL CONFORM TO ASTM A709 GR. 50 AND SHALL BE PAID FOR AT THE UNIT PRICE BID FOR STRUCTURAL STEEL (PLATE GIRDER). ALL STRUCTURAL STEEL SHALL BE PAINTED. PAINT SYSTEM FOR STEEL GIRDERS SHALL BE PROTECTION SYSTEM II. THIS SYSTEM SHALL CONFORM TO TXDOT STANDARD SPECIFICATION ITEM 446.
2. GIRDER TENSION FLANGES AND WEBS ARE CLASSIFIED AS TENSION COMPONENTS AND SHALL CONFROM TO ITEM 442.2.A.1.
3. ALL DIMENSIONS SHOWN IN GIRDER ELEVATIONS ARE HORIZONTAL ARC DIMENSIONS.
4. EXCEPT AT CHANGES IN SECTION, SHOP OR FIELD FLANGE AND WEB SPLICES IN PLATE GIRDERS MAY BE LOCATED AS DESIRABLE TO OPTIMIZE PLATE LENGTHS AND ERECTION PROCEDURES, EXCEPT THAT SPLICES WILL NOT BE ALLOWED WHERE A 40FT OR LESS UNSPLICED LENGTH WOULD SUFFICE; NEITHER WILL TENSION FLANGE SPLICES BE ALLOWED WITHIN 0.05S EITHER SIDE OF INTERIOR BEARINGS, WITHIN 0.10S EITHER SIDE OF THE CENTERLINES OF INTERIOR SPANS, NOR WITHIN THE RANGE BETWEEN 0.30S AND 0.50S FROM THE END BEARINGS (S = LENGTH C.C. BEARING OF SPAN IN WHICH THE SPLICE IS MADE).
5. FLANGE AND WEB SPLICES SHALL BE MADE BY FULL PENETRATION GROOVE WELDS IN ACCORDANCE WITH ITEM 441 "STEEL STRUCTURES".

TABLE OF DEAD LOAD DEFLECTIONS

DUE TO CAST IN PLACE CONCRETE (FT)

	LOCATION	GIRDER NO. 1	2	3	4	5
SPAN 2	0	0.000	0.000	0.000	0.000	0.000
	1	0.088	0.083	0.079	0.074	0.068
	2	0.158	0.150	0.142	0.133	0.122
	3	0.209	0.198	0.187	0.175	0.161
	4	0.233	0.221	0.209	0.195	0.179
	5	0.229	0.217	0.205	0.191	0.175
	6	0.199	0.189	0.178	0.166	0.152
	7	0.151	0.143	0.135	0.125	0.114
	FS1	0.109	0.103	0.097	0.089	0.081
	8	0.092	0.087	0.082	0.076	0.069
	9	0.037	0.035	0.032	0.029	0.026
	10	0.000	0.000	0.000	0.000	0.000
SPAN 3	11	-0.008	-0.005	-0.002	0.000	0.003
	12	0.009	0.014	0.019	0.022	0.025
	FS2	0.019	0.025	0.031	0.034	0.037
	13	0.034	0.041	0.047	0.051	0.054
	14	0.056	0.063	0.069	0.073	0.076
	15	0.064	0.071	0.077	0.082	0.084
	16	0.057	0.064	0.070	0.074	0.077
	17	0.036	0.043	0.048	0.052	0.055
	FS3	0.021	0.027	0.032	0.036	0.039
	18	0.010	0.016	0.021	0.024	0.027
	19	-0.007	-0.004	-0.001	0.001	0.003
	20	0.000	0.000	0.000	0.000	0.000
SPAN 4	21	0.036	0.033	0.031	0.028	0.025
	22	0.089	0.084	0.079	0.073	0.066
	FS4	0.105	0.099	0.093	0.086	0.078
	23	0.148	0.140	0.132	0.122	0.112
	24	0.198	0.188	0.177	0.165	0.151
	25	0.228	0.217	0.204	0.190	0.175
	26	0.232	0.220	0.208	0.194	0.178
	27	0.209	0.198	0.187	0.175	0.161
	28	0.159	0.151	0.143	0.133	0.123
	29	0.087	0.083	0.078	0.073	0.067
	30	0.000	0.000	0.000	0.000	0.000

TABLE OF DEAD LOAD DEFLECTIONS

TOTAL INCLUDING STEEL (FT)

	LOCATION	GIRDER NO. 1	2	3	4	5
SPAN 2	0	0.000	0.000	0.000	0.000	0.000
	1	0.118	0.112	0.106	0.099	0.091
	2	0.214	0.203	0.192	0.179	0.165
	3	0.283	0.268	0.253	0.236	0.218
	4	0.316	0.299	0.282	0.263	0.243
	5	0.310	0.294	0.277	0.258	0.238
	6	0.270	0.256	0.241	0.224	0.206
	7	0.204	0.193	0.182	0.169	0.155
	FS1	0.147	0.139	0.130	0.121	0.110
	8	0.125	0.118	0.111	0.102	0.093
	9	0.050	0.047	0.044	0.040	0.035
	10	0.000	0.000	0.000	0.000	0.000
SPAN 3	11	-0.010	-0.005	-0.002	0.001	0.004
	12	0.014	0.021	0.027	0.032	0.036
	FS2	0.028	0.036	0.043	0.049	0.053
	13	0.049	0.058	0.066	0.071	0.075
	14	0.079	0.088	0.096	0.102	0.106
	15	0.091	0.100	0.108	0.114	0.118
	16	0.081	0.090	0.097	0.103	0.107
	17	0.052	0.061	0.068	0.074	0.078
	FS3	0.031	0.039	0.046	0.051	0.056
	18	0.016	0.023	0.030	0.034	0.038
	19	-0.008	-0.004	-0.001	0.003	0.005
	20	0.000	0.000	0.000	0.000	0.000
SPAN 4	21	0.048	0.044	0.041	0.037	0.033
	22	0.120	0.113	0.106	0.098	0.089
	FS4	0.142	0.134	0.126	0.116	0.106
	23	0.200	0.189	0.178	0.165	0.151
	24	0.268	0.254	0.239	0.223	0.204
	25	0.309	0.292	0.276	0.257	0.237
	26	0.314	0.298	0.281	0.262	0.241
	27	0.283	0.268	0.253	0.236	0.218
	28	0.215	0.204	0.193	0.180	0.166
	29	0.118	0.112	0.106	0.099	0.091
	30	0.000	0.000	0.000	0.000	0.000

TABLE OF CAMBER ORDINATES

"Y" VALUES IN FEET

	LOCATION	GIRDER NO. 1	2	3	4	5
SPAN 2	0	1.07	1.06	1.05	1.04	1.03
	1	1.44	1.43	1.42	1.41	1.39
	2	1.77	1.76	1.75	1.73	1.72
	3	2.05	2.04	2.02	2.00	1.99
	4	2.28	2.26	2.24	2.23	2.20
	5	2.45	2.43	2.41	2.40	2.38
	6	2.56	2.55	2.54	2.52	2.50
	7	2.64	2.63	2.61	2.60	2.59
	FS1	2.67	2.66	2.65	2.64	2.63
	8	2.68	2.67	2.66	2.65	2.64
	9	2.70	2.70	2.69	2.69	2.69
	10	2.73	2.73	2.73	2.73	2.73
SPAN 3	11	2.79	2.79	2.80	2.80	2.80
	12	2.86	2.86	2.87	2.87	2.88
	FS2	2.88	2.89	2.90	2.90	2.91
	13	2.91	2.92	2.93	2.93	2.94
	14	2.94	2.95	2.96	2.96	2.97
	15	2.92	2.93	2.94	2.95	2.95
	16	2.86	2.87	2.88	2.89	2.89
	17	2.76	2.77	2.78	2.78	2.79
	FS3	2.69	2.70	2.71	2.71	2.72
	18	2.63	2.64	2.64	2.65	2.65
	19	2.49	2.49	2.49	2.50	2.50
	20	2.35	2.35	2.35	2.35	2.35
SPAN 4	21	2.25	2.24	2.24	2.24	2.23
	22	2.15	2.15	2.14	2.13	2.12
	FS4	2.12	2.11	2.11	2.10	2.09
	23	2.04	2.03	2.02	2.01	2.00
	24	1.91	1.89	1.88	1.86	1.84
	25	1.72	1.71	1.69	1.67	1.65
	26	1.48	1.47	1.45	1.43	1.41
	27	1.19	1.17	1.16	1.14	1.12
	28	0.84	0.83	0.81	0.80	0.79
	29	0.44	0.43	0.43	0.42	0.41
	30	0.00	0.00	0.00	0.00	0.00

BAR TABLE

BAR	SIZE
A	#5
B	#5
D	#5
G	#5
H	#5
J	#5
M	#5
T	#4

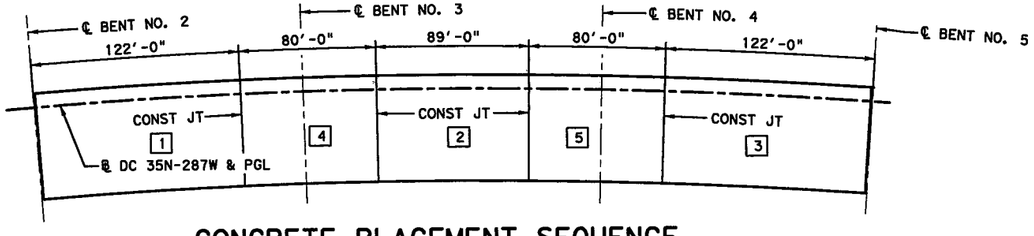

CONCRETE PLACEMENT SEQUENCE

CONTINUOUS PLACEMENT WILL NOT BE PERMITTED

GIRDER SLOPE TABLE (FT/FT)

LOCATION	GIRDER NO. 1	2	3	4	5
℄ BRG BENT NO. 2	0.017	0.017	0.017	0.017	0.017
℄ BRG BENT NO. 3	0.005	0.005	0.005	0.005	0.005
℄ BRG BENT NO. 4	-0.009	-0.009	-0.009	-0.009	-0.009
℄ BRG BENT NO. 5	-0.021	-0.021	-0.021	-0.021	-0.021

HL 93 LOADING

PESC P.E. Structural Consultants, Inc.
www.PEStructural.com
TBPE Firm No. F-1475

Texas Department of Transportation
© 2012

IH 35W FROM NORTH TARRANT PKWY TO IH 820

493.00' CONTINUOUS PLATE GIRDER UNIT

NB IH 35W TO WB US 287

SCALE: NTS — SHEET 6 OF 6

DESIGN	FED.RD. DIV.NO.	FEDERAL AID PROJECT NO.	HIGHWAY NO.
AEB	6	(SEE TITLE SHEET)	IH 35W
GRAPHICS TLS	STATE	DISTRICT / COUNTY	SHEET NO.
CHECK NRR	TEXAS	FTW / TARRANT	1427
CHECK AB	CONTROL	SECTION / JOB	
	0014	16 / 255, ETC.	

FILENAME: S3BBR*35N-287W*SG*06.dgn

DRAWING DATE: 7/13/2012

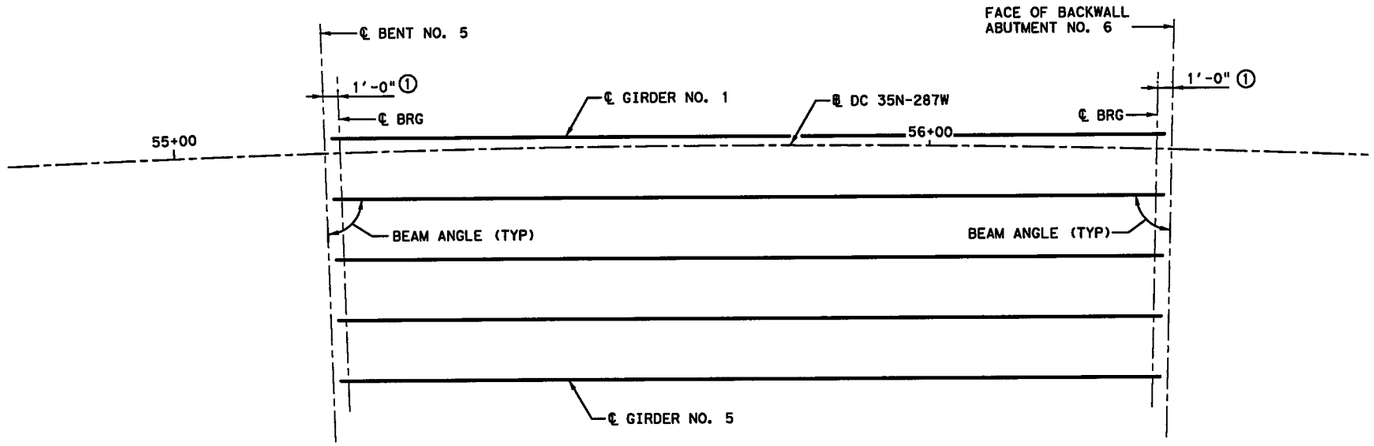

SPAN 5
(TX54 GIRDERS)

① SEE IGEB STANDARD FOR ORIENTATION OF DIMENSION.

② GIRDER LENGTHS SHOWN ARE BOTTOM GIRDER FLANGE LENGTHS WITH ADJUSTMENTS MADE FOR BEAM SLOPE.

BENT REPORT

ABUT NO. 5 (S 53 50 15.17 W)
DISTANCE BETWEEN STATION LINE AND BEAM 1 2.000 L

			BEAM SPAC. (C.L. BENT)	BEAM ANGLE D M S
SPAN 5	BEAM	1	0.000	88 23 44
	BEAM	2	8.000	88 23 44
	BEAM	3	8.000	88 23 44
	BEAM	4	8.000	88 23 44
	BEAM	5	8.000	88 23 44
	TOTAL		32.000	

BENT NO. 6 (S 57 2 46.00 W)
DISTANCE BETWEEN STATION LINE AND BEAM 1 2.000 L

			BEAM SPAC. (C.L. BENT)	BEAM ANGLE D M S
SPAN 5	BEAM	1	0.000	88 23 44
	BEAM	2	8.000	88 23 44
	BEAM	3	8.000	88 23 44
	BEAM	4	8.000	88 23 44
	BEAM	5	8.000	88 23 44
	TOTAL		32.000	

BEAM REPORT

BEAM REPORT, SPAN 5

		HORIZONTAL DISTANCE C-C BENT	C-C BRG.	TRUE DISTANCE BOT. BM. FLG.②	BEAM SLOPE
BEAM	1	112.097	110.097	111.63	-0.0253
BEAM	2	111.649	109.649	111.19	-0.0254
BEAM	3	111.201	109.201	110.74	-0.0255
BEAM	4	110.754	108.754	110.29	-0.0256
BEAM	5	110.306	108.306	109.84	-0.0257

STATE OF TEXAS
NESTOR R. RUBIANO
94294
LICENSED
PROFESSIONAL ENGINEER
7/06/2012

HL 93 LOADING

PESC P.E. Structural Consultants, Inc.
www.PEStructural.com
TBPE Firm No. F-1475

Texas Department of Transportation
© 2012

IH 35W FROM NORTH TARRANT PKWY TO IH 820

GIRDER LAYOUT (SPAN 5)

NB IH 35W TO WB US 287

SCALE: NTS SHEET 1 OF 1

DESIGN	FED.RD. DIV.NO.	FEDERAL AID PROJECT NO.		HIGHWAY NO.
AEB	6	(SEE TITLE SHEET)		IH 35W
GRAPHICS TLS	STATE	DISTRICT	COUNTY	SHEET NO.
CHECK NRR	TEXAS	FTW	TARRANT	1428
CHECK AB	CONTROL 0014	SECTION 16	JOB 255, ETC.	

FILENAME: S3BBR#35N-287W#GF#02.dgn
DRAWING DATE: 7/13/2012

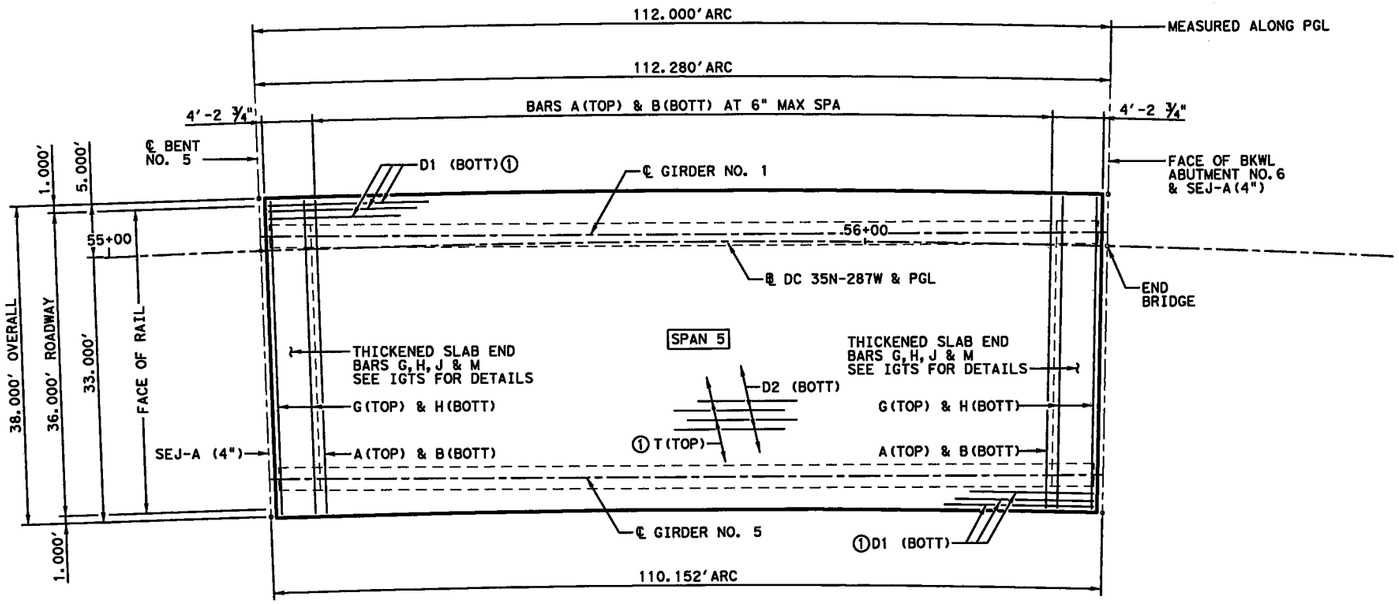

PLAN

① 2" END COVER ON BARS D1 AND T.

STATE OF TEXAS
NESTOR R. RUBIANO
94294
LICENSED PROFESSIONAL ENGINEER

7/06/2012

HL 93 LOADING

P.E. Structural Consultants, Inc.
www.PEStructural.com
TBPE Firm No. F-1475

Texas Department of Transportation
© 2012

IH 35W FROM NORTH TARRANT PKWY TO IH 820

112.00' PRESTRESSED CONCRETE I-GIRDER UNIT

NB IH 35W TO WB US 287

SCALE: NTS — SHEET 1 OF 2

DESIGN	FED.RD. DIV.NO.	FEDERAL AID PROJECT NO.		HIGHWAY NO.
AEB	6	(SEE TITLE SHEET)		IH 35W
GRAPHICS TLS	STATE	DISTRICT	COUNTY	SHEET NO.
CHECK NRR	TEXAS	FTW	TARRANT	1429
CHECK AB	CONTROL	SECTION	JOB	
	0014	16	255, ETC.	

DRAWING DATE: 7/13/2012 FILENAME: S3BBR#35N-287W#PB#03.dgn

SPAN NO.	GIRDER NO.	"A" FT	"B" FT
5	1	0.115	0.163
	2	0.118	0.167
	3	0.116	0.165
	4	0.114	0.162
	5	0.091	0.129

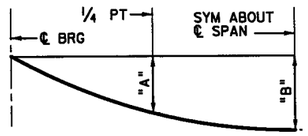

DEAD LOAD DEFLECTION DIAGRAM

CALCULATED DEFLECTIONS SHOWN ARE DUE TO THE CONCRETE SLAB ON INTERIOR GIRDERS ONLY (EC = 5000 KSI). ADJUST VALUES AS REQUIRED FOR EXTERIOR GIRDERS AND IF OPTIONAL SLAB FORMING IS USED. THESE VALUES MAY REQUIRE FIELD VERIFICATION.

TABLE OF SECTION DEPTHS

SPAN NO.	GIRDER NO.	"X" AT ℄ BRG	"Y" AT ℄ BRG	② "Z" AT ℄ SPAN
5	1 & 2	1'- 1/4"	5'-6 1/4"	9 7/8"
	3 & 4	1'- 1/4"	5'-6 1/4"	10"
	5	1'- 1/4"	5'-6 1/4"	9 5/8"

②THEORETICAL DIMENSION

BAR TABLE

BAR	SIZE
A	#5
B	#5
D	#5
G	#5
H	#5
J	#5
M	#5
T	#4

TABLE OF ESTIMATED QUANTITIES

SPAN	REINF CONC SLAB	PRESTR CONC I-GIRDERS (TX54) ④	CL S CONC (HPC)	REINFORCING STEEL ③
NO.	SF	LF	CY	LB
5	4,226	553.69	121.9	27,469

③REINFORCING STEEL WEIGHT IS CALCULATED USING AN APPROXIMATE FACTOR OF 6.5 LBS PER SQ FT.

④LENGTHS SHOWN ARE BOTTOM OF GIRDER FLANGE LENGTHS WITH ADJUSTMENTS MADE FOR BEAM SLOPE. SEE GIRDER LAYOUT FOR GIRDER LENGTHS.

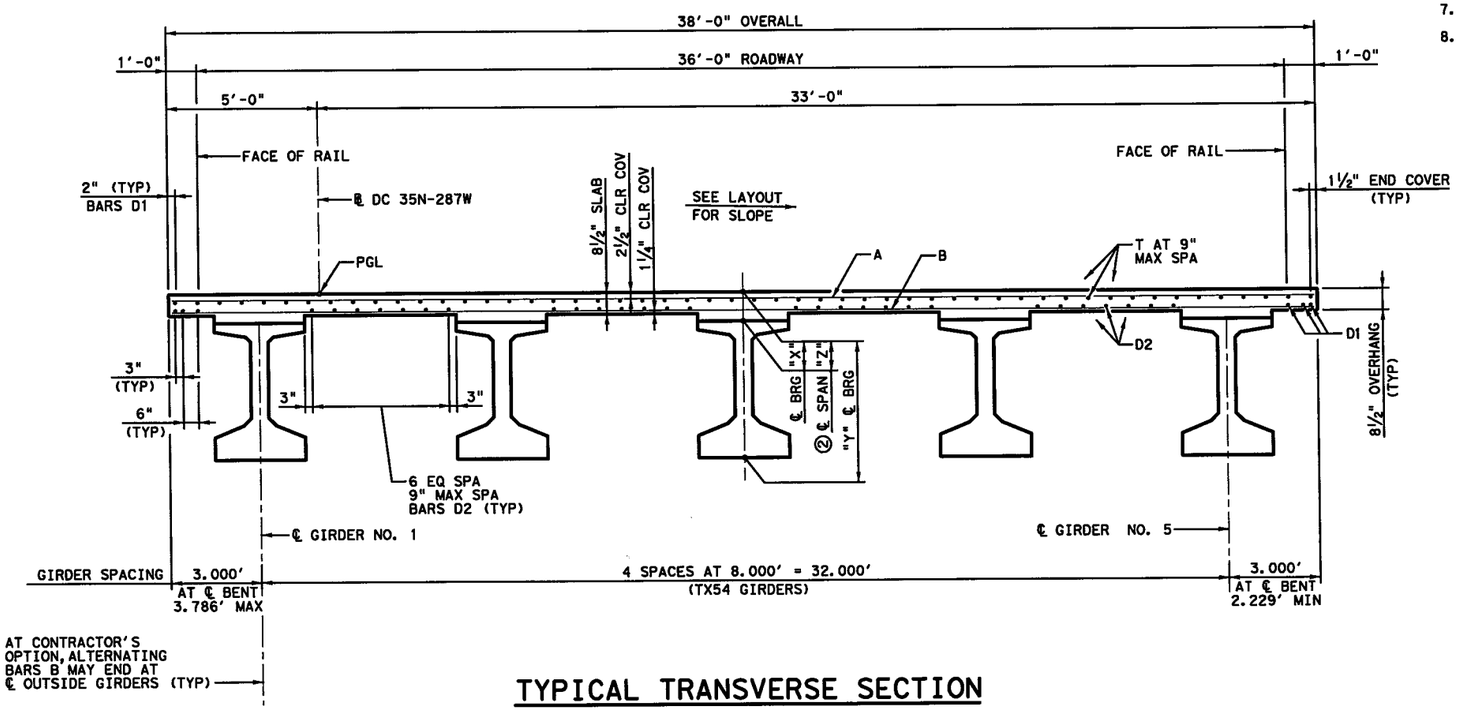

TYPICAL TRANSVERSE SECTION

GENERAL NOTES:

1. DESIGNED ACCORDING TO AASHTO LRFD BRIDGE DESIGN SPECIFICATIONS, 5TH EDITION (2010).
2. CLASS "S"(HPC) CONCRETE STRENGTH F'C = 4,000 PSI.
3. ALL REINFORCING SHALL BE GRADE 60 AND EPOXY COATED.
4. SEE PCP OR PMDF STANDARDS FOR DETAILS AND QUANTITY ADJUSTMENTS IF EITHER OF THESE OPTIONS ARE USED.
5. SEE IGTS STANDARD FOR THICKENED SLAB END DETAILS.
6. SEE IGMS STANDARD FOR MISCELLANEOUS SLAB DETAILS.
7. SEE RAIL STANDARD FOR RAIL ANCHORAGE IN SLAB.
8. BAR LAPS, WHERE REQUIRED, TO BE AS FOLLOWS:
   #4 = 2'-1"
   #5 = 2'-7"

STATE OF TEXAS
NESTOR R. RUBIANO
94294
LICENSED PROFESSIONAL ENGINEER
7/06/2012

HL 93 LOADING

PESC P.E. Structural Consultants, Inc.
www.PEStructural.com
TBPE Firm No. F-1475

Texas Department of Transportation
© 2012

IH 35W FROM NORTH TARRANT PKWY TO IH 820

112.00' PRESTRESSED CONCRETE I-GIRDER UNIT

NB IH 35W TO WB US 287

SCALE: NTS — SHEET 2 OF 2

DESIGN	FED.RD. DIV.NO.	FEDERAL AID PROJECT NO.		HIGHWAY NO.
AEB	6	(SEE TITLE SHEET)		IH 35W
GRAPHICS TLS	STATE	DISTRICT	COUNTY	SHEET NO.
CHECK NRR	TEXAS	FTW	TARRANT	1430
CHECK AB	CONTROL 0014	SECTION 16	JOB 255, ETC.	

DRAWING DATE: 7/13/2012 FILENAME: S3BBR#35N-287W#PB#04.dgn

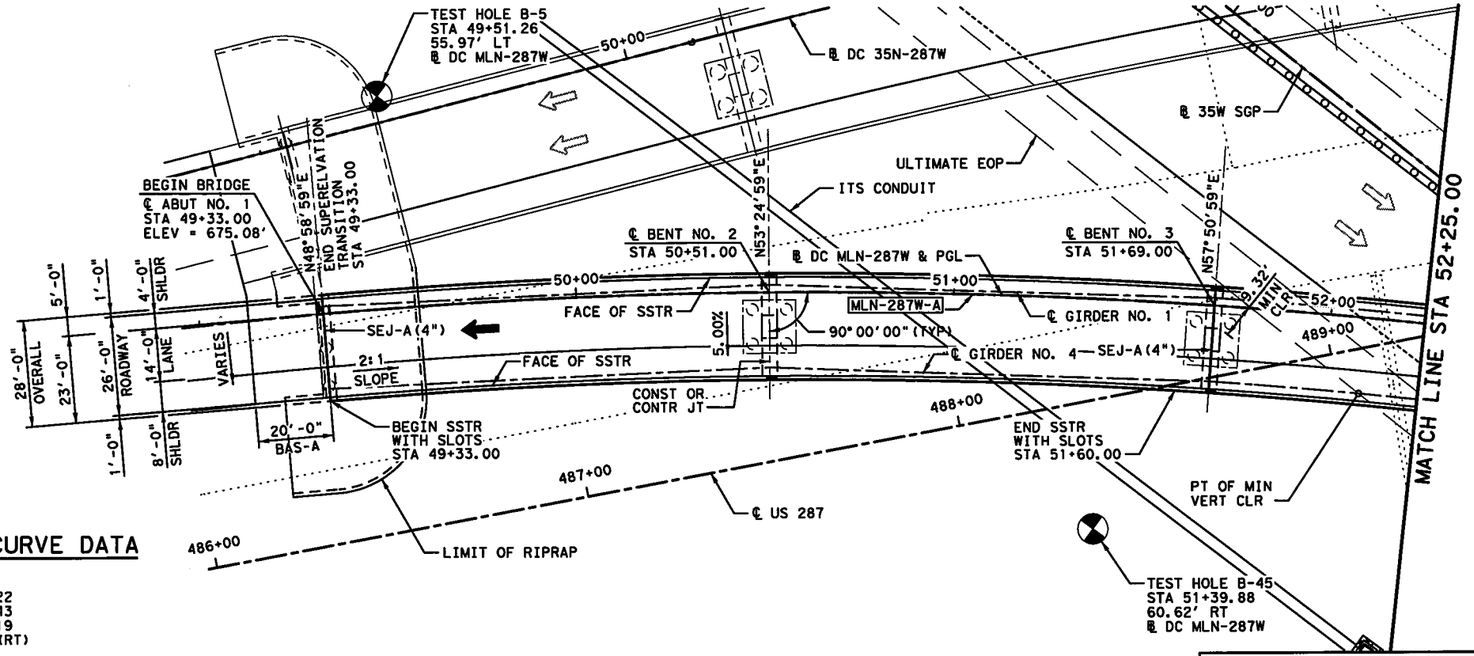

PLAN

HORIZONTAL CURVE DATA

MLN-287W-A

PC STATION = 46+79.22
PI STATION = 53+90.43
PT STATION = 60+10.19
Δ = 50° 00' 20.51" (RT)
D = 3° 45' 25.56"
T = 711.21'
L = 1,330.97'
R = 1,525.00'

NEW NBI NUMBER: 02-220-0014-16-548
FUNCTIONAL CLASSIFICATION: URBAN FREEWAY
DESIGN SPEED: 45 MPH
ADT: 8,200 (2030)

0' 10' 20' 40'
SCALE IN FEET

GENERAL NOTES:

1. DESIGNED ACCORDING TO AASHTO LRFD BRIDGE DESIGN SPECIFICATIONS, 5TH EDITION (2010).
2. ALL DIMENSIONS ARE EITHER HORIZONTAL OR VERTICAL AND MUST BE CORRECTED FOR GRADE, CROWN, AND/OR SUPERELEVATION.
3. FOR CONCRETE GIRDER UNITS, "D"DENOTES BENTS WITH DOWEL BARS "D"AND SLOTTED HOLES AT THE ENDS OF EXTERIOR GIRDERS ONLY.
4. FOR STEEL GIRDER UNITS, BEAM END CONDITIONS ARE DENOTED AS FOLLOWS:
   (F) FIXED BEARING
   (E) EXPANSION BEARING
   (ES) EXPANSION BEARING (SLIDING)
5. SEE "BORING LOGS - BRIDGE" SHEETS FOR GEOTECHNICAL INFORMATION.
6. CONTRACTOR TO VERIFY LOCATION OF ALL UTILITIES PRIOR TO EXCAVATION.
7. THE "H" VALUES SHOWN ARE ESTIMATED COLUMN HEIGHTS. CONTRACTOR IS RESPONSIBLE FOR CALCULATING ACTUAL COLUMN HEIGHTS BASED ON FIELD CONDITIONS.
8. SEE ILLUMINATION PLANS AND RELATED SUMMARY SHEETS FOR UNDERPASS LIGHT LOCATIONS, JUNCTION BOXES, FUSED DISCONNECT SWITCHES AND CONDUIT DETAILS AND QUANTITIES.
9. SIDE SLOT DRAINS FOR SSTR RAIL SHALL NOT BE LOCATED WITHIN 6' OF ℄ BENT OR ABUTMENT.
10. ALLOWANCE FOR FUTURE RESURFACING: 23.3 PSF.

HL 93 LOADING

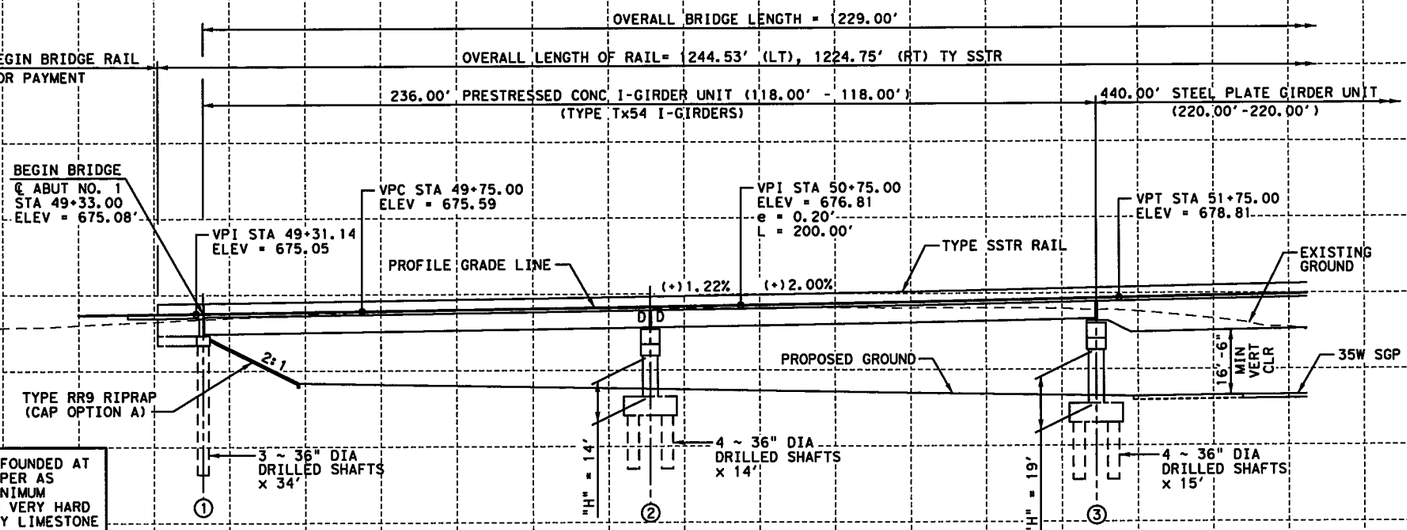

ELEVATION

DRILLED SHAFTS SHALL BE FOUNDED AT THE LENGTHS SHOWN OR DEEPER AS NECESSARY TO OBTAIN A MINIMUM PENETRATION INTO HARD TO VERY HARD GRAY LIMESTONE AND SHALEY LIMESTONE THE FOLLOWING DISTANCES:
ABUTS NO. 1 AND 9 ~ 7.5'
BENT NO. 2 ~ 8'
BENT NO. 3 ~ 13'
BENT NO. 4 ~ 19'
BENT NO. 5 ~ 12'
BENTS NO. 6 TO 8 ~ 8'

STATE OF TEXAS
NESTOR R. RUBIANO
94294
LICENSED PROFESSIONAL ENGINEER
8/29/2012

P.E. Structural Consultants, Inc.
www.PEStructural.com
TBPE Firm No. F-1475

Texas Department of Transportation
© 2012

IH 35W FROM NORTH TARRANT PKWY TO IH 820

BRIDGE LAYOUT

NB IH 35W ML TO WB US 287

SCALE: 1"=40'

SHEET 1 OF 4

DESIGN	FED. RD. DIV. NO.	FEDERAL AID PROJECT NO.		HIGHWAY NO.
AEB	6	(SEE TITLE SHEET)		IH 35W
GRAPHICS TLS	STATE	DISTRICT	COUNTY	SHEET NO.
CHECK NRR	TEXAS	FTW	TARRANT	1431
CHECK AB	CONTROL	SECTION	JOB	
	0014	16	255, ETC.	

FILENAME: S3BBR*MLN-287W*BL*01.dgn
DRAWING DATE: 7/13/2012

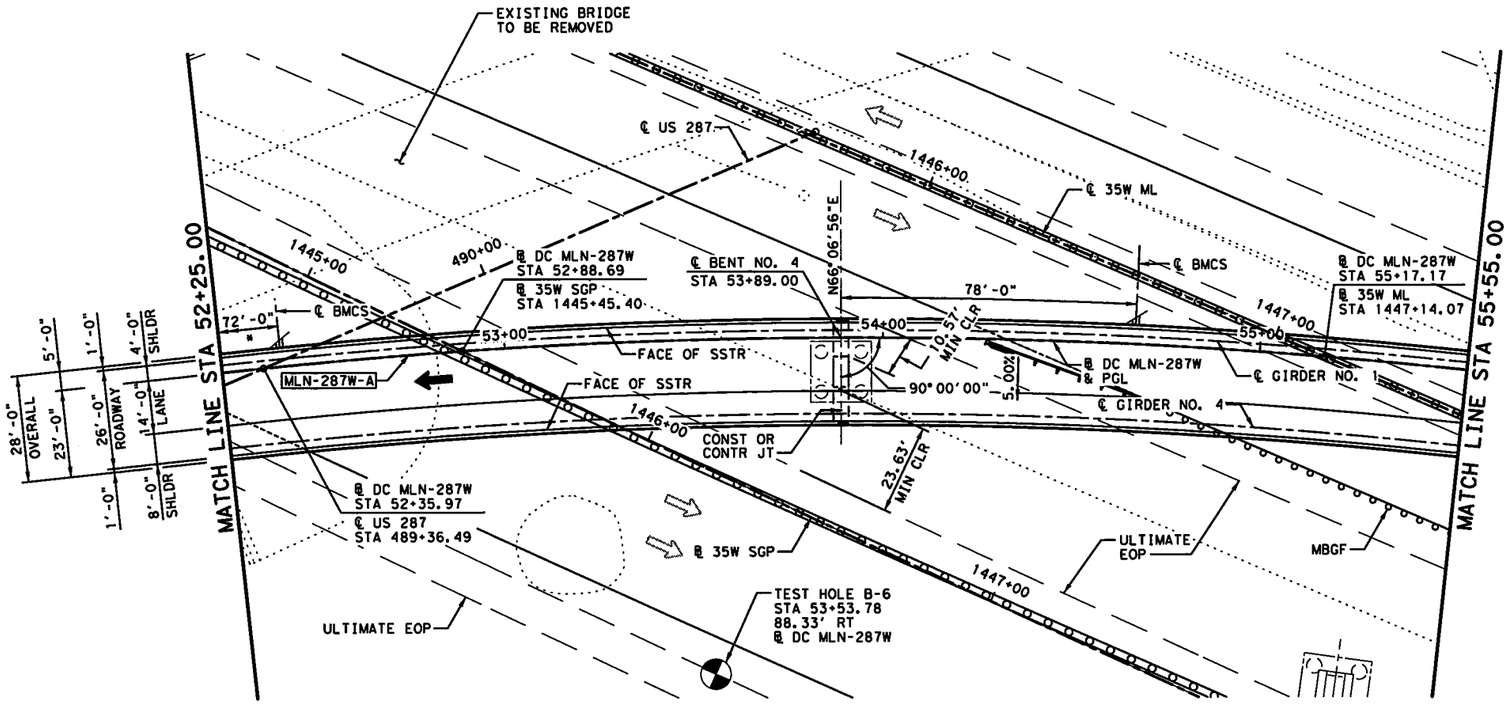

PLAN

* DISTANCE TO ℄ BENT NO. 3

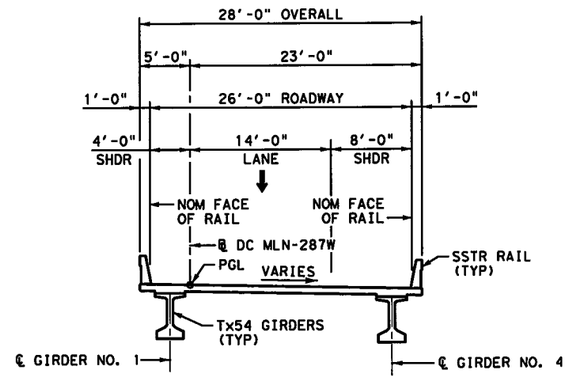

TYPICAL SECTION

(SPANS 1-2 & 6-8) (NTS)

HL 93 LOADING

ELEVATION

P.E. Structural Consultants, Inc.
www.PEStructural.com
TBPE Firm No. F-1475

Texas Department of Transportation

© 2012

IH 35W FROM NORTH TARRANT PKWY TO IH 820

BRIDGE LAYOUT

NB IH 35W ML TO WB US 287

SCALE: 1"=40' SHEET 2 OF 4

DESIGN	FED. RD. DIV. NO.	FEDERAL AID PROJECT NO.		HIGHWAY NO.
AEB	6	(SEE TITLE SHEET)		IH 35W
GRAPHICS	STATE	DISTRICT	COUNTY	SHEET NO.
TLS	TEXAS	FTW	TARRANT	1432
CHECK	CONTROL	SECTION	JOB	
NRR	0014	16	255, ETC.	
CHECK				
AB				

FILENAME: S38BR#MLN-287W#BL#02.dgn

DRAWING DATE: 7/13/2012

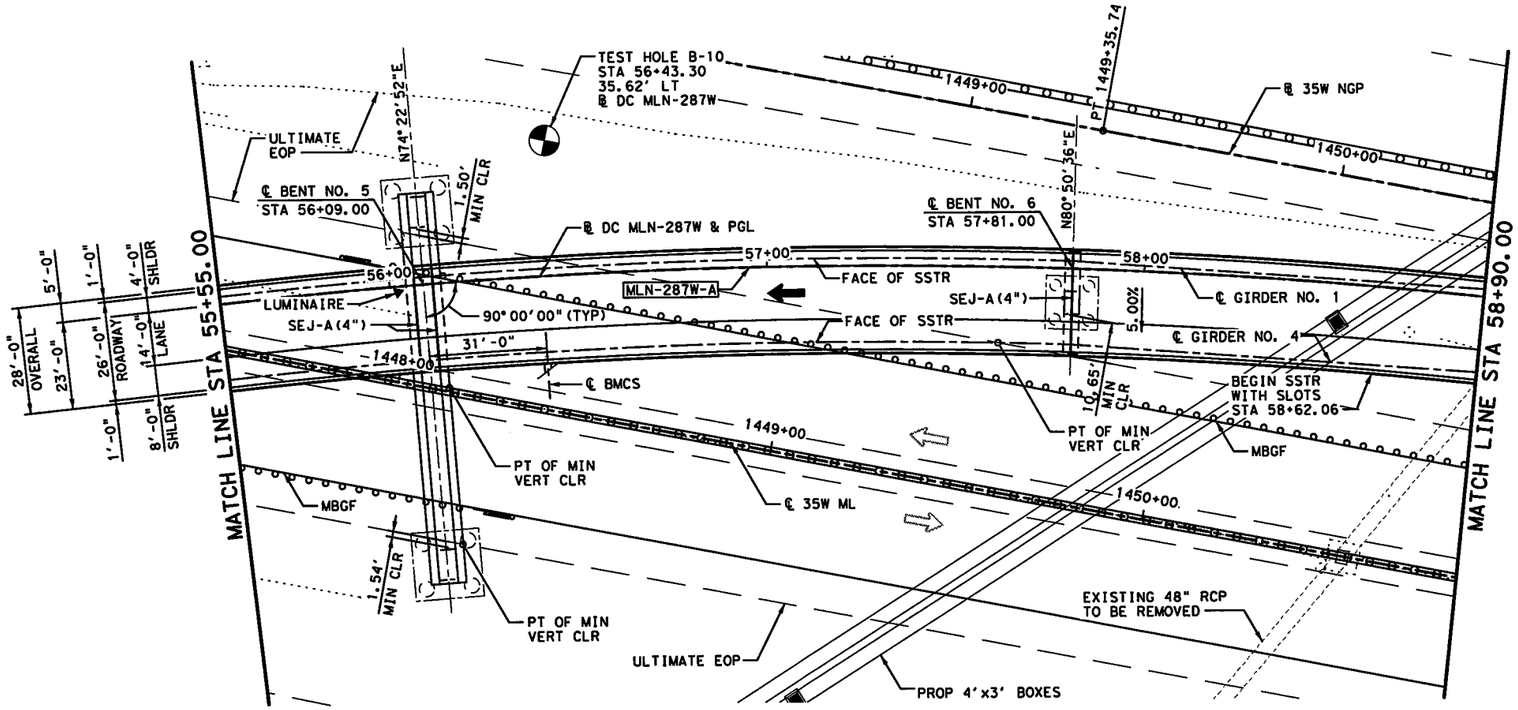

PLAN

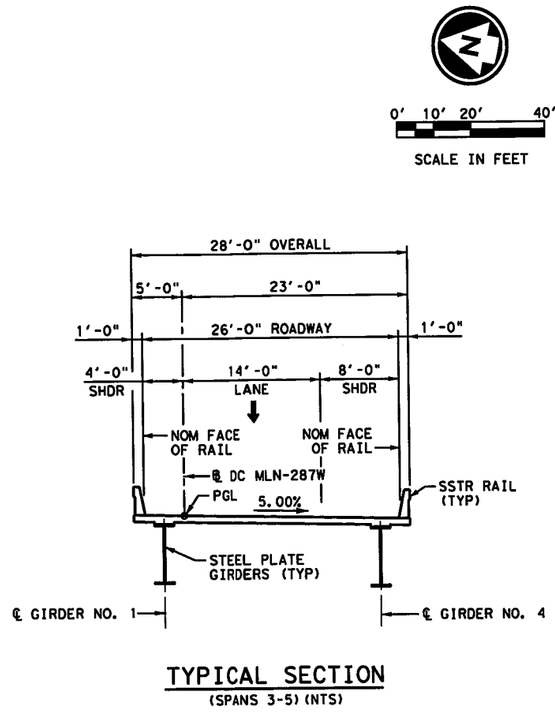

TYPICAL SECTION
(SPANS 3-5) (NTS)

HL 93 LOADING

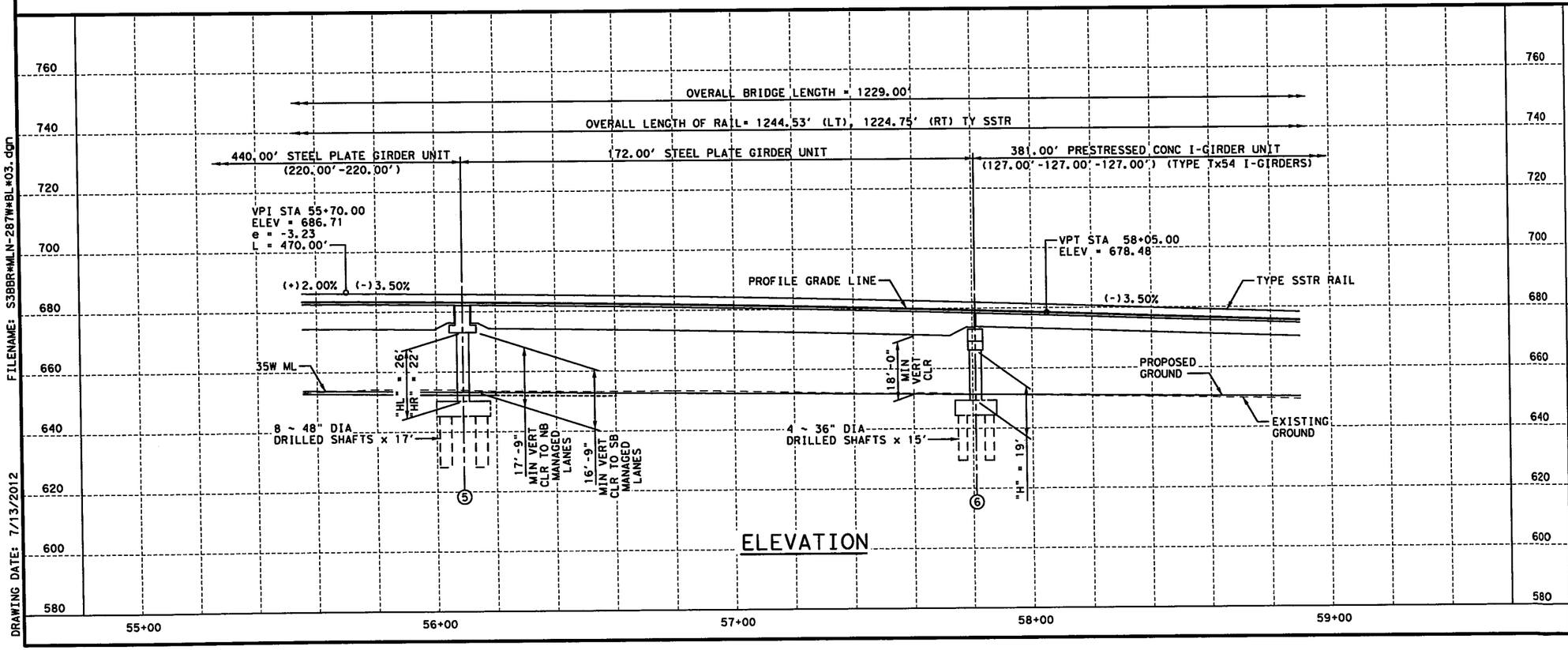

ELEVATION

STATE OF TEXAS
NESTOR R. RUBIANO
94294
LICENSED
PROFESSIONAL ENGINEER
7/06/2012

PESC P.E. Structural Consultants, Inc.
www.PEStructural.com
TBPE Firm No. F-1475

Texas Department of Transportation
© 2012

IH 35W FROM NORTH TARRANT PKWY TO IH 820

BRIDGE LAYOUT

NB IH 35W ML TO WB US 287

SCALE: 1"=40' SHEET 3 OF 4

DESIGN	FED.RD. DIV.NO.	FEDERAL AID PROJECT NO.		HIGHWAY NO.
AEB	6	(SEE TITLE SHEET)		IH 35W
GRAPHICS TLS	STATE	DISTRICT	COUNTY	SHEET NO.
CHECK NRR	TEXAS	FTW	TARRANT	1433
CHECK AB	CONTROL	SECTION	JOB	
	0014	16	255, ETC.	

FILENAME: S3BR*MLN-287W*BL*03.dgn
DRAWING DATE: 7/13/2012

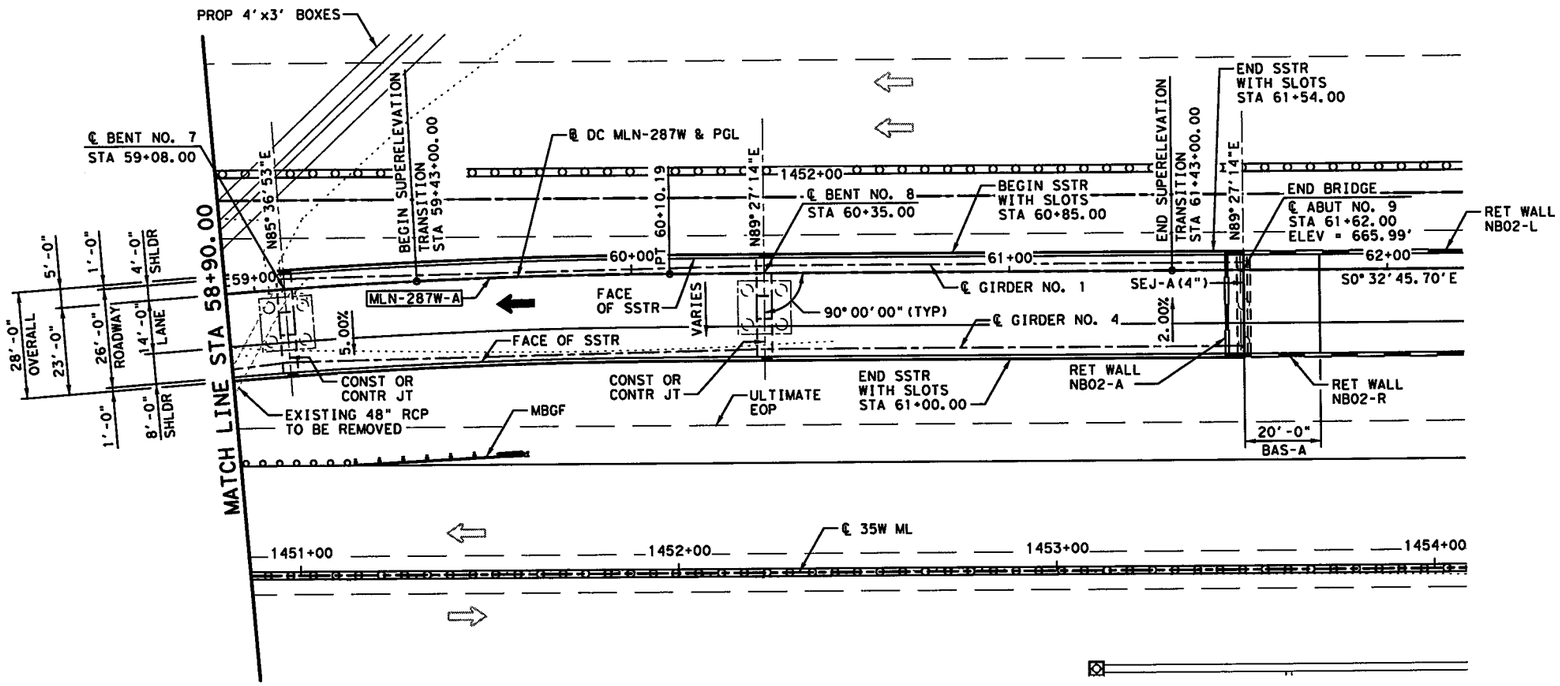

PLAN

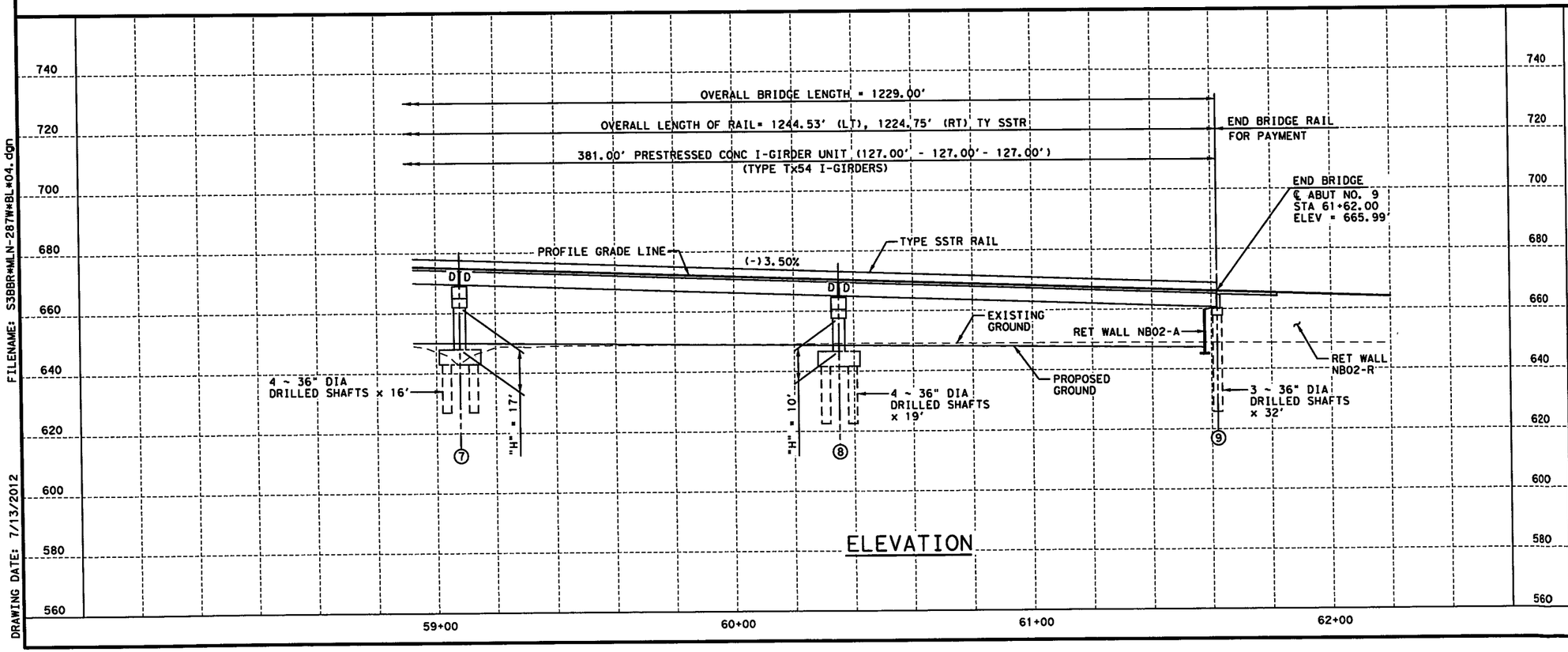

ELEVATION

0' 10' 20' 40'

SCALE IN FEET

HL 93 LOADING

FILENAME: S38BR#MLN-287W#BL#04.dgn

DRAWING DATE: 7/13/2012

STATE OF TEXAS
NESTOR R. RUBIANO
94294
LICENSED
PROFESSIONAL ENGINEER

7/06/2012

P.E. Structural Consultants, Inc.
www.PEStructural.com
TBPE Firm No. F-1475

Texas Department of Transportation

© 2012

IH 35W FROM NORTH TARRANT PKWY TO IH 820

BRIDGE LAYOUT

NB IH 35W ML TO WB US 287

SCALE: 1"=40'

SHEET 4 OF 4

DESIGN	FED.RD. DIV.NO.	FEDERAL AID PROJECT NO.		HIGHWAY NO.
AEB	6	(SEE TITLE SHEET)		IH 35W
GRAPHICS TLS	STATE	DISTRICT	COUNTY	SHEET NO.
CHECK NRR	TEXAS	FTW	TARRANT	1434
CHECK AB	CONTROL	SECTION	JOB	
	0014	16	255, ETC.	

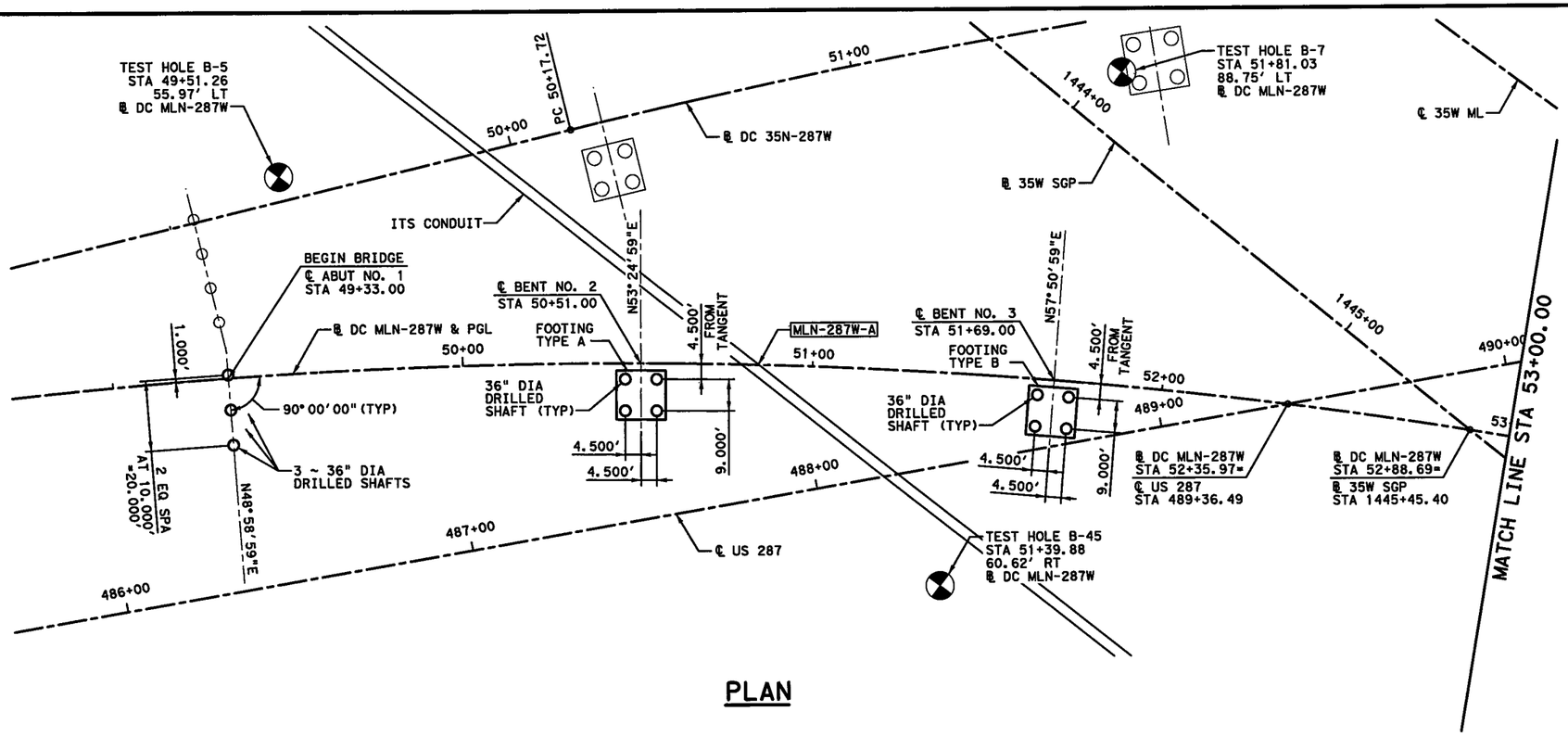

PLAN

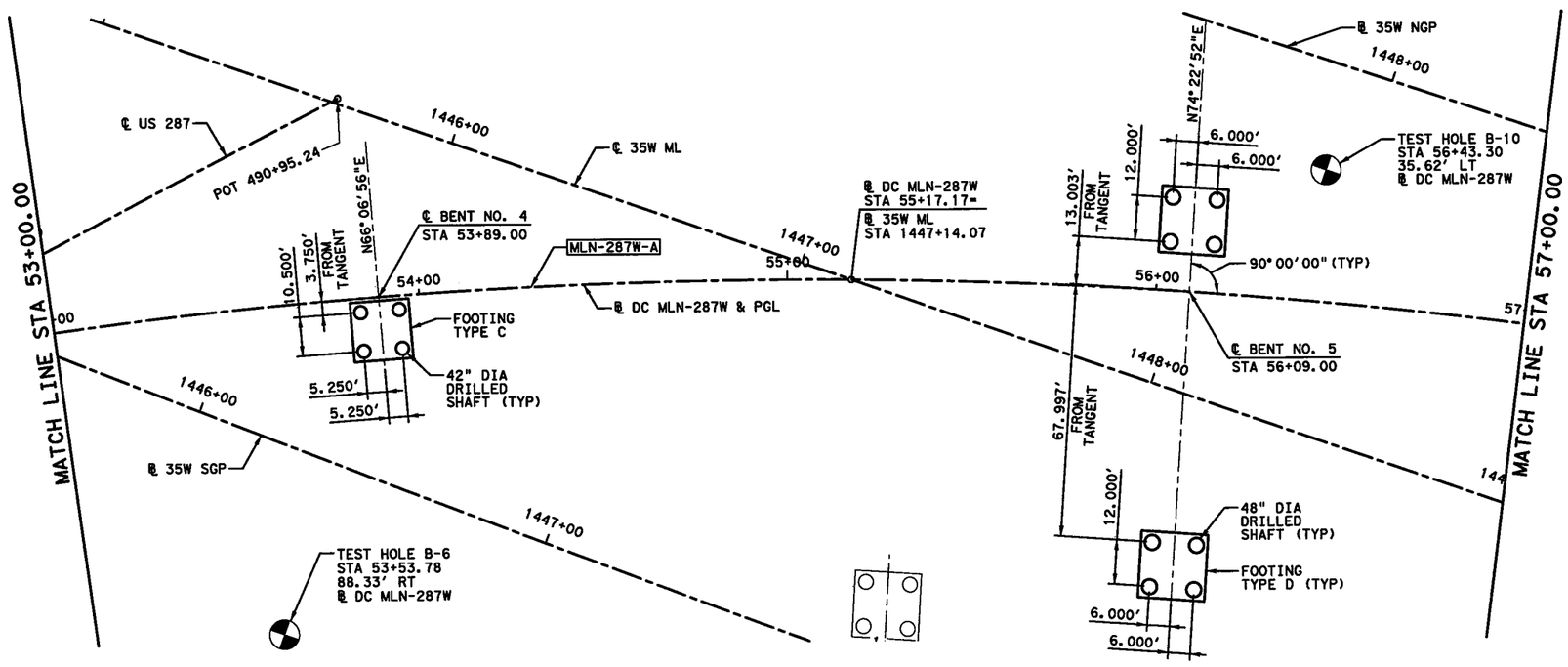

PLAN

0' 10' 20' 40'

SCALE IN FEET

GENERAL NOTES:

1. FOR ANY TEMPORARY SHORING REQUIRED AT INTERIOR BENT LOCATIONS, FOLLOW TXDOT STANDARD SPECIFICATION ITEM 403.
2. SEE "BORING LOGS - BRIDGE" SHEETS FOR GEOTECHNICAL INFORMATION.
3. ⊕ DENOTES TEST HOLE LOCATION.
4. CONTRACTOR TO VERIFY LOCATION OF ALL UTILITIES PRIOR TO EXCAVATION.

HORIZONTAL CURVE DATA

MLN-287W-A

PC STATION = 46+79.22
PI STATION = 53+90.43
PT STATION = 60+10.19
Δ = 50° 00' 20.51" (RT)
D = 3° 45' 25.56"
T = 711.21'
L = 1,330.97'
R = 1,525.00'

HL 93 LOADING

STATE OF TEXAS
NESTOR R. RUBIANO
94294
LICENSED PROFESSIONAL ENGINEER

7/06/2012

P.E. Structural Consultants, Inc.
www.PEStructural.com
TBPE Firm No. F-1475

Texas Department of Transportation
© 2012

IH 35W FROM NORTH TARRANT PKWY TO IH 820

FOUNDATION LAYOUT
NB IH 35W ML TO WB US 287

SCALE: 1"=40' SHEET 1 OF 2

DESIGN	FED.RD. DIV.NO.	FEDERAL AID PROJECT NO.		HIGHWAY NO.
AEB	6	(SEE TITLE SHEET)		IH 35W
GRAPHICS TLS	STATE	DISTRICT	COUNTY	SHEET NO.
CHECK NRR	TEXAS	FTW	TARRANT	1435
CHECK AB	CONTROL	SECTION	JOB	
	0014	16	255, ETC.	

FILENAME: S3BBR*MLN-287W*FL*01.dgn
DRAWING DATE: 7/13/2012

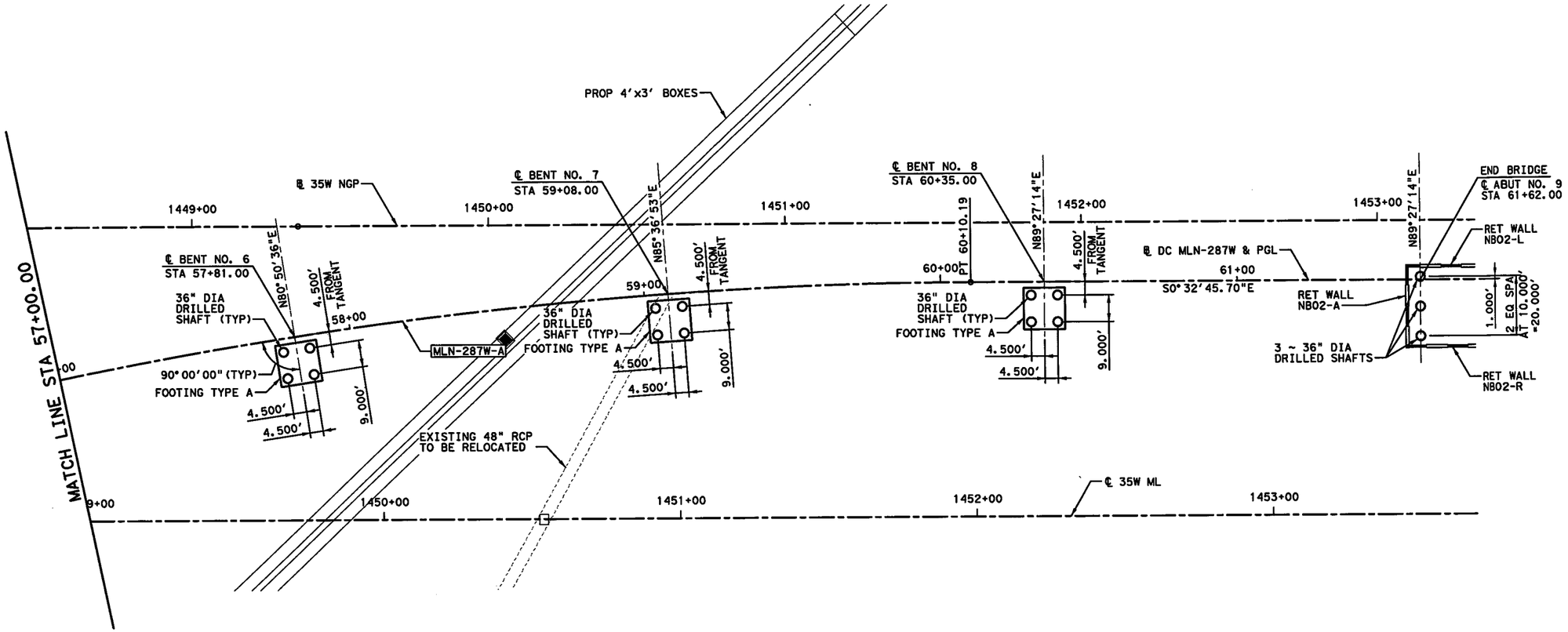

0' 10' 20' 40'

SCALE IN FEET

NESTOR R. RUBIANO
94294
LICENSED PROFESSIONAL ENGINEER
STATE OF TEXAS

7/06/2012

HL 93 LOADING

P.E. Structural Consultants, Inc.
www.PEStructural.com
TBPE Firm No. F-1475

Texas Department of Transportation
© 2012

IH 35W FROM NORTH TARRANT PKWY TO IH 820

FOUNDATION LAYOUT

NB IH 35W ML TO WB US 287

SCALE: 1"=40' SHEET 2 OF 2

DESIGN	FED.RD. DIV.NO.	FEDERAL AID PROJECT NO.		HIGHWAY NO.
AEB	6	(SEE TITLE SHEET)		IH 35W
GRAPHICS	STATE	DISTRICT	COUNTY	SHEET NO.
TLS	TEXAS	FTW	TARRANT	1436
CHECK	CONTROL	SECTION	JOB	
NRR	0014	16	255, ETC.	
CHECK				
AB				

DRAWING DATE: 7/13/2012 FILENAME: S3BBR*MLN-287W*FL*02.dgn

SUMMARY OF ESTIMATED QUANTITIES

BID ITEM	403 2001	416 2004	416 2005	416 2006	420 2018	420 2041	420 2042	420 2093	420 2256	420 2269	420	422 2003	425 2068	428 2002
BID ITEM DESCRIPTION / BRIDGE ELEMENT	TEMPORARY SPL SHORING	DRILL SHAFT	DRILL SHAFT	DRILL SHAFT	CL C CONC (MASS PLACEMENT)	CL C CONC (HPC)	CL C CONC (HPC)	CL C CONC (MASS PLACE) (HPC)	CL S CONC (HPC)	CL C CONC (HPC)	CL F CONC (HPC) (MASS PLACEMENT)	REINF CONC SLAB (HPC) (CL S)	PRESTR CONC GIRDER (TX54)	CONC SURF TREAT (CLASS II)
		(36 IN)	(42 IN)	(48 IN)	(FOOTING)	(ABUT)	(BENT)	(COLUMN)	(APPR SLAB)	(CAP)	(BENT)			
	SF	LF	LF	LF	CY	CY	CY	CY	CY	CY	CY	SF	LF	SY
2 - ABUTMENTS		198				36.4			42					154
7 - INTERIOR BENTS	4,466	316	144	136	343.1		168.9	20.1		20.1	281.1			460
1 - 236.000' PRESTRESSED CONCRETE I-GIRDER UNIT (SPANS 1-2)												6,570	934.36	827
1 - 440.000' STEEL PLATE GIRDER UNIT (SPANS 3-4)												12,248		1,541
1 - 172.000' STEEL PLATE GIRDER UNIT (SPAN 5)												4,788		602
1 - 381.000' PRESTRESSED CONCRETE I-GIRDER UNIT (SPANS 6-8)												10,630	1,513.44	1,337
TOTALS	4,466	514	144	136	343.1	36.4	168.9	20.1	42	20.1	281.1	34,236	2,447.80	4,921

SUMMARY OF ESTIMATED QUANTITIES

BID ITEM	432 2001	434 2049	434 2050	434 2057	434 2073	434 2087	434 2088	442 2002	442 2048	450 2102	454 2001	636 2001
BID ITEM DESCRIPTION / BRIDGE ELEMENT	RIPRAP (CONC)	ELASTOMERIC BEAR	ELASTOMERIC BEAR	ELASTOMERIC BEAR	ELASTOMERIC BEAR	ELASTOMERIC BEAR	ELASTOMERIC BEAR	STR STL (PLATE GIRDER)	STRUCTURAL STEEL (MISC NON - BRIDGE)	RAIL (TYPE SSTR) (HPC)	SEALED EXPANSION JOINT (4 IN) (SEJ-A)	ALUMINUM SIGNS (TY A)
	(4 IN)	(EE5)	(EE6)	(EF5)	(F8)	(EE4)	(EF4)					
	CY	EA	EA	EA	EA	EA	EA	LB	LB	LF	LF	SF
2 - ABUTMENTS	58									24.0	54	
7 - INTERIOR BENTS											108	
1 - 236.000' PRESTRESSED CONCRETE I-GIRDER UNIT (SPANS 1-2)										469.2		
1 - 440.000' STEEL PLATE GIRDER UNIT (SPANS 3-4)			8		4			946,500	444	874.8		28
1 - 172.000' STEEL PLATE GIRDER UNIT (SPAN 5)		1		1		3	3	281,800	222	342.0		14
1 - 381.000' PRESTRESSED CONCRETE I-GIRDER UNIT (SPANS 6-8)										759.3		
TOTALS	58	1	8	1	4	3	3	1,228,300	666	2,469.3	162	42

BEARING SEAT ELEVATIONS

		BEAM 1	BEAM 2	BEAM 3	BEAM 4
BENT 1	(FWD)	669.235	668.872	668.510	668.147
BENT 2	(BK)	670.756	670.393	670.031	669.668
	(FWD)	670.786	670.424	670.061	669.699
BENT 3	(BK)	672.811	672.444	672.077	671.711
	(FWD)	672.373	672.006	671.640	671.273
BENT 4		673.216	672.911	672.544	672.178
BENT 5	(BK)	676.800	676.434	676.067	675.701
	(FWD)	675.862	675.537	675.171	674.804
BENT 6	(BK)	673.463	673.138	672.772	672.405
	(FWD)	673.418	673.052	672.685	672.318
BENT 7	(BK)	669.110	668.744	668.377	668.011
	(FWD)	668.936	668.570	668.203	667.836
BENT 8	(BK)	664.461	664.328	664.195	664.062
	(FWD)	664.619	664.491	664.363	664.235
BENT 9	(BK)	660.169	660.315	660.462	660.609

STATE OF TEXAS
NESTOR R. RUBIANO
94294
LICENSED
PROFESSIONAL ENGINEER

8/29/2012

HL 93 LOADING

PESC
P.E. Structural Consultants, Inc.
www.PEStructural.com
TBPE Firm No. F-1475

Texas Department of Transportation
© 2012

IH 35W FROM NORTH TARRANT PKWY TO IH 820

EST. QUANTITIES AND BEARING SEAT ELEV.

NB IH 35W ML TO WB US 287

SCALE: NTS — SHEET 1 OF 1

DESIGN	FED.RD. DIV.NO.	FEDERAL AID PROJECT NO.		HIGHWAY NO.
AEB	6	(SEE TITLE SHEET)		IH 35W
GRAPHICS TLS	STATE	DISTRICT	COUNTY	SHEET NO.
CHECK NRR	TEXAS	FTW	TARRANT	1437
CHECK AB	CONTROL	SECTION	JOB	
	0014	16	255, ETC.	

FILENAME: S3BBR*MLN-287W*EQ*01.DGN
DRAWING DATE: 7/13/2012

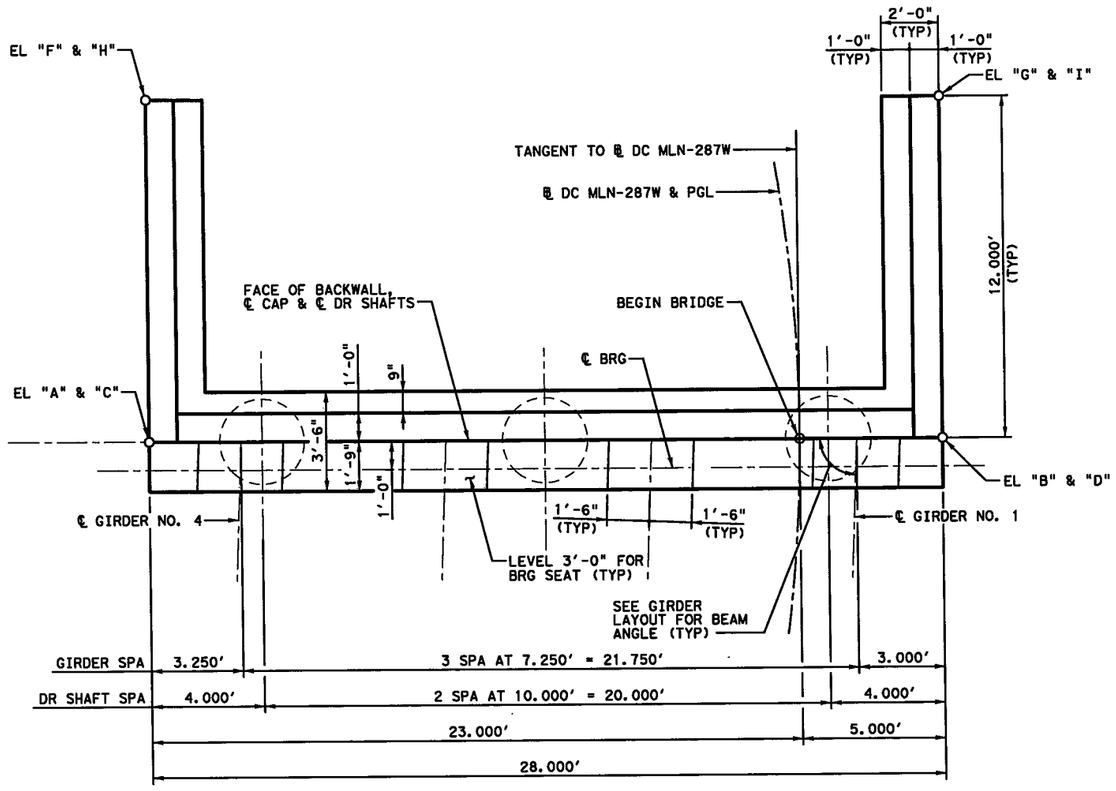

PLAN

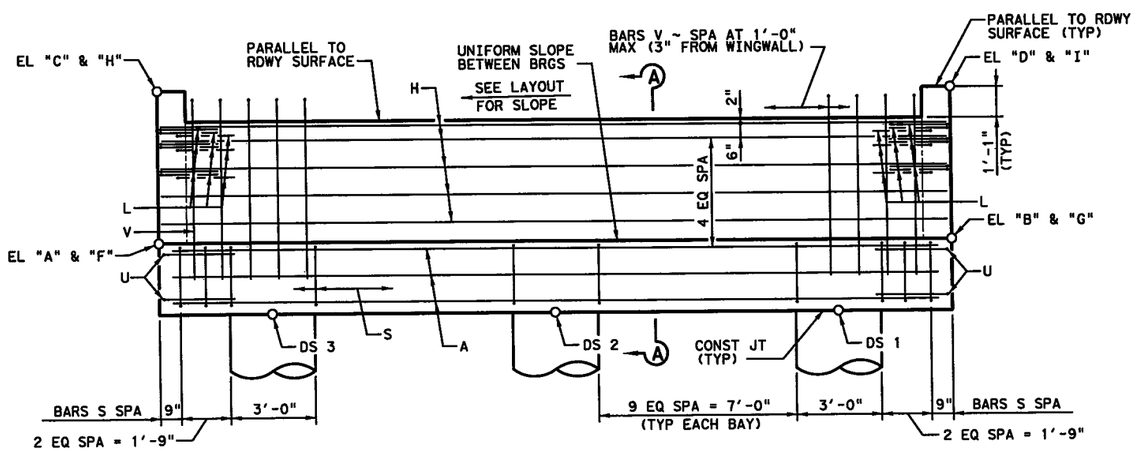

ELEVATION

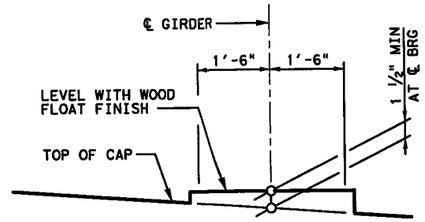

BEARING SEAT DETAIL

(BEARING SURFACE SHALL BE CLEAN AND FREE OF ALL LOOSE MATERIAL BEFORE PLACING BEARING PAD)

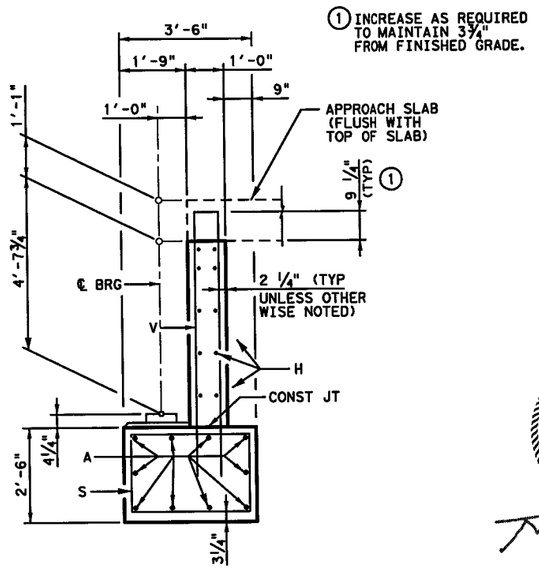

SECTION A-A

TABLE OF ELEVATIONS				
CAP	"A"	"B"	"C"	"D"
	667.861	669.262	673.928	675.328
WINGWALLS	"F"	"G"	"H"	"I"
	667.715	669.118	673.782	675.184
TOP OF DS	DS 1	DS 2	DS 3	---
	666.558	666.058	665.558	---
SHAFT TIP	632.558	632.058	631.558	---
AS- BUILT SHAFT TIP				---

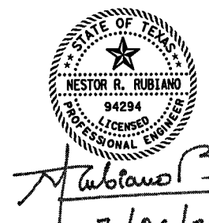

HL 93 LOADING

P.E. Structural Consultants, Inc.
www.PEStructural.com
TBPE Firm No. F-1475

Texas Department of Transportation
© 2012

IH 35W FROM NORTH TARRANT PKWY TO IH 820

ABUTMENT NO. 1

NB IH 35W ML TO WB US 287

SCALE: NTS SHEET 1 OF 2

DESIGN	FED. RD. DIV. NO.	FEDERAL AID PROJECT NO.		HIGHWAY NO.
AEB	6	(SEE TITLE SHEET)		IH 35W
GRAPHICS TLS	STATE	DISTRICT	COUNTY	SHEET NO.
CHECK NRR	TEXAS	FTW	TARRANT	1438
CHECK AB	CONTROL	SECTION	JOB	
	0014	16	255, ETC.	

FILENAME: S3BBR*ML N-287W*AB*01.dgn
DRAWING DATE: 7/13/2012

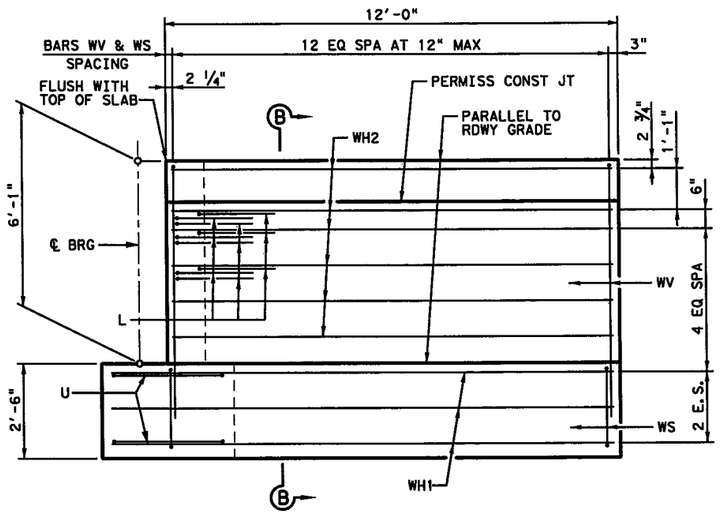

ELEVATION

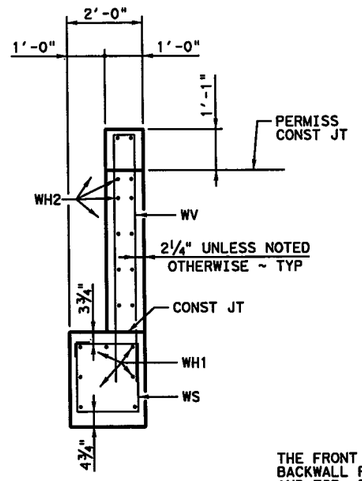

SECTION B-B

WINGWALL DETAILS

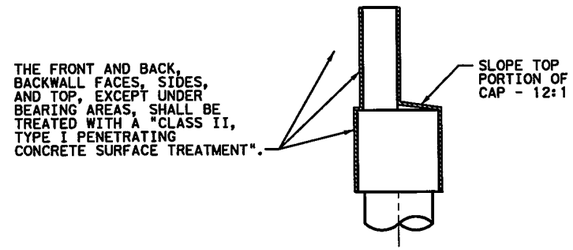

TABLE OF ESTIMATED QUANTITIES

BAR	NO.	SIZE	LENGTH	WEIGHT
A	10	#11	27'-0"	1,435
H	10	#6	27'-8"	416
L	18	#6	4'-0"	108
S	26	#5	11'-4"	307
U	4	#6	8'-0"	48
V	27	#5	14'-8"	413
WH1	14	#6	13'-5"	282
WH2	24	#6	11'-8"	421
WS	26	#4	7'-8"	133
WV	26	#5	14'-11"	405
REINFORCING STEEL			LB	3,968
CL C CONC (HPC) (ABUT)			CY	23.2

GENERAL NOTES:

1. DESIGNED ACCORDING TO AASHTO LRFD BRIDGE DESIGN SPECIFICATIONS, 5TH EDITION (2010).
2. CLASS "C" (HPC) CONCRETE STRENGTH F'C = 3,600 PSI.
3. ALL CAP AND WALL REINFORCING SHALL BE GRADE 60.
4. SEE FD STANDARD FOR ALL FOUNDATION DETAILS AND NOTES.
5. SEE RAIL STANDARD FOR RAIL ANCHORAGE IN WINGWALLS.
6. CALCULATED FOUNDATION LOADS:
   CAP DRILLED SHAFTS = 140 TONS / D.S.

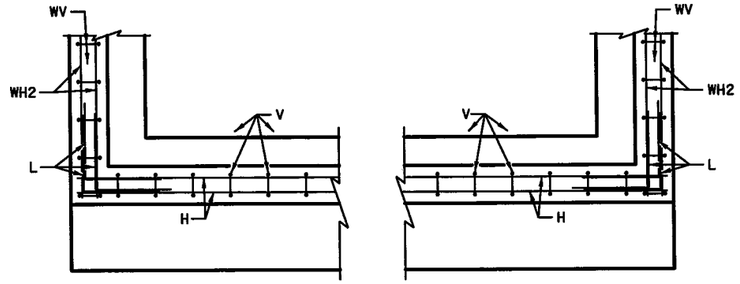

BACKWALL

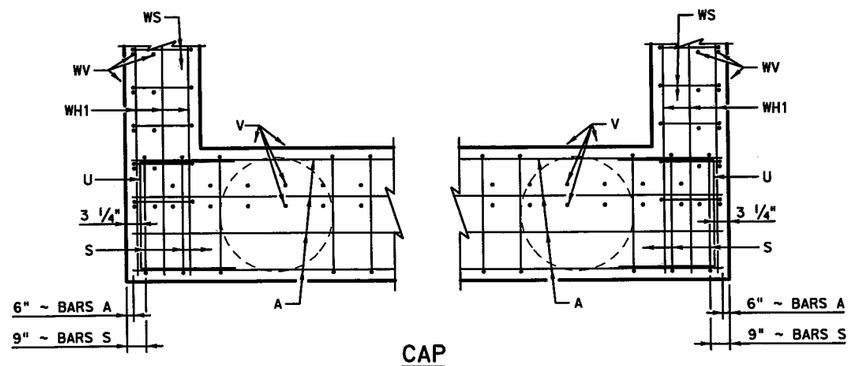

CAP

CORNER DETAILS

CONCRETE SURFACE TREATMENT DETAIL FOR ABUTMENT

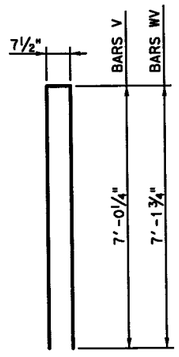

BARS V & WV

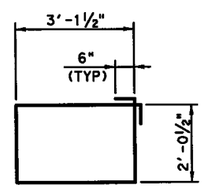

BARS S

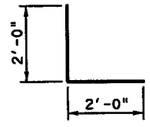

BARS L

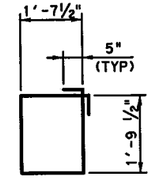

BARS WS

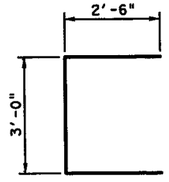

BARS U

HL 93 LOADING

P.E. Structural Consultants, Inc.
www.PEStructural.com
TBPE Firm No. F-1475

Texas Department of Transportation
© 2012

IH 35W FROM NORTH TARRANT PKWY TO IH 820

ABUTMENT NO. 1

NB IH 35W ML TO WB US 287

SCALE: NTS — SHEET 2 OF 2

DESIGN	FED. RD. DIV. NO.	FEDERAL AID PROJECT NO.		HIGHWAY NO.
AEB	6	(SEE TITLE SHEET)		IH 35W
GRAPHICS TLS	STATE	DISTRICT	COUNTY	SHEET NO.
CHECK NRR	TEXAS	FTW	TARRANT	1439
CHECK AB	CONTROL	SECTION	JOB	
	0014	16	255, ETC.	

FILENAME: S3BBR*ML_N-287W*AB*02.dgn
DRAWING DATE: 7/13/2012

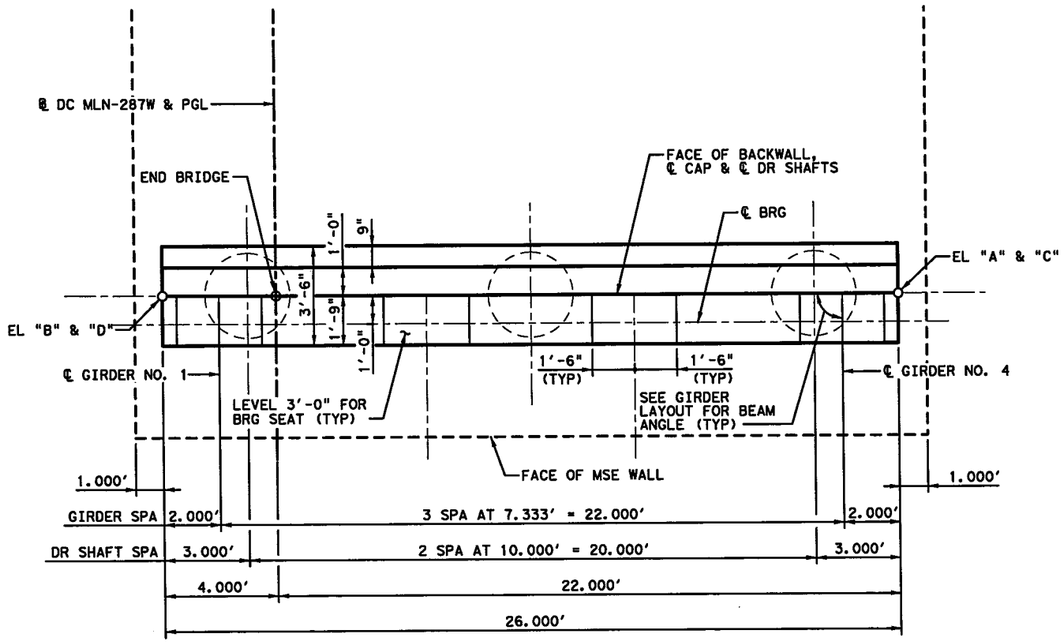

PLAN

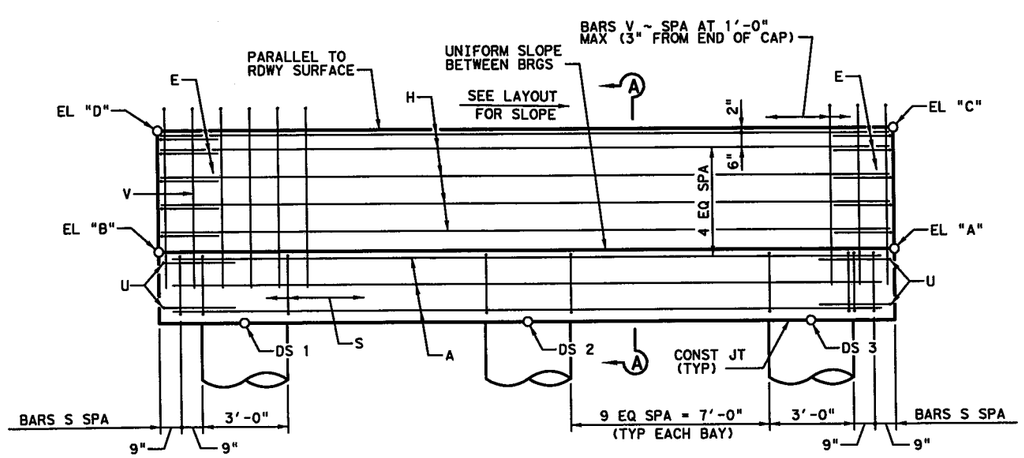

ELEVATION

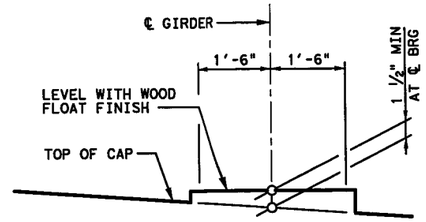

BEARING SEAT DETAIL

(BEARING SURFACE SHALL BE CLEAN AND FREE OF ALL LOOSE MATERIAL BEFORE PLACING BEARING PAD)

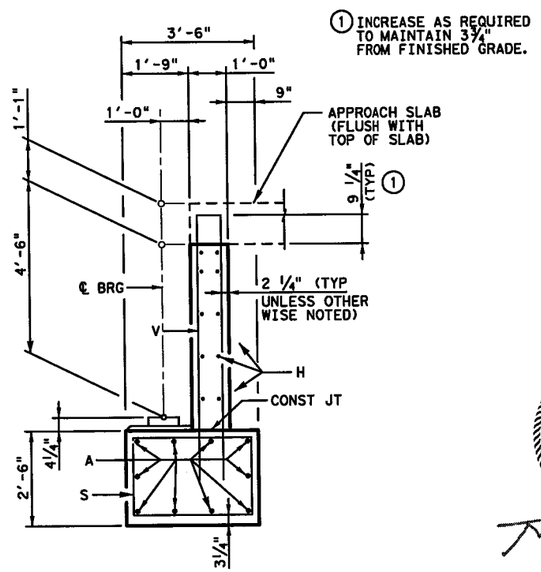

SECTION A-A

HL 93 LOADING

TABLE OF ELEVATIONS				
CAP	"A"	"B"	"C"	"D"
	660.524	660.003	665.342	664.822
TOP OF DS	DS 1	DS 2	DS 3	---
	657.563	657.763	657.963	---
SHAFT TIP	625.563	625.763	625.963	---
AS- BUILT SHAFT TIP				---

STATE OF TEXAS
NESTOR R. RUBIANO
94294
LICENSED PROFESSIONAL ENGINEER
7/06/2012

PESC P.E. Structural Consultants, Inc.
www.PEStructural.com
TBPE Firm No. F-1475

Texas Department of Transportation
© 2012

IH 35W FROM NORTH TARRANT PKWY TO IH 820

ABUTMENT NO. 9

NB IH 35W ML TO WB US 287

SCALE: NTS SHEET 1 OF 2

DESIGN	FED.RD. DIV. NO.	FEDERAL AID PROJECT NO.		HIGHWAY NO.
AEB	6	(SEE TITLE SHEET)		IH 35W
GRAPHICS TLS	STATE	DISTRICT	COUNTY	SHEET NO.
CHECK NRR	TEXAS	FTW	TARRANT	1440
CHECK AB	CONTROL	SECTION	JOB	
	0014	16	255, ETC.	

FILENAME: S3BBR*MLN-287W*AB*03.dgn
DRAWING DATE: 7/13/2012

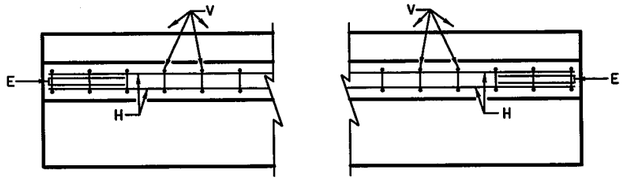

BACKWALL

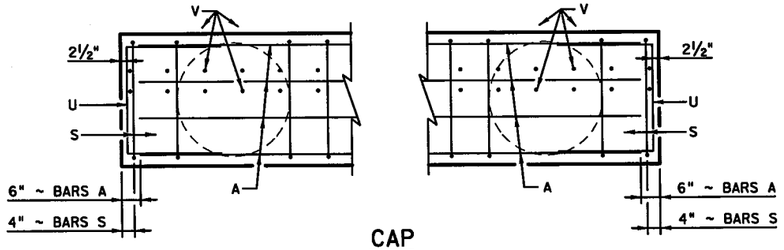

CAP

CORNER DETAILS

THE FRONT AND BACK, BACKWALL FACES, SIDES, AND TOP, EXCEPT UNDER BEARING AREAS, SHALL BE TREATED WITH A "CLASS II, TYPE I PENETRATING CONCRETE SURFACE TREATMENT".

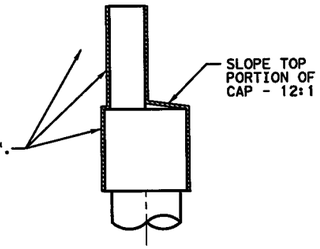

CONCRETE SURFACE TREATMENT DETAIL FOR ABUTMENT

TABLE OF ESTIMATED QUANTITIES

BAR	NO.	SIZE	LENGTH	WEIGHT
A	10	#11	25'-0"	1,328
E	10	#5	4'-6"	47
H	10	#6	25'-8"	386
S	24	#5	11'-4"	284
U	4	#6	8'-0"	48
V	27	#5	14'-5"	406
REINFORCING STEEL			LB	2,499
CL C CONC (HPC) (ABUT)			CY	13.2

GENERAL NOTES:

1. DESIGNED ACCORDING TO AASHTO LRFD BRIDGE DESIGN SPECIFICATIONS, 5TH EDITION (2010).
2. CLASS "C" (HPC) CONCRETE STRENGTH F'C = 3,600 PSI.
3. ALL CAP AND WALL REINFORCING SHALL BE GRADE 60.
4. SEE FD STANDARD FOR ALL FOUNDATION DETAILS AND NOTES.
5. SEE RAIL STANDARD FOR RAIL ANCHORAGE IN WINGWALLS.
6. CALCULATED FOUNDATION LOADS:
   CAP DRILLED SHAFTS = 140 TONS / D.S.

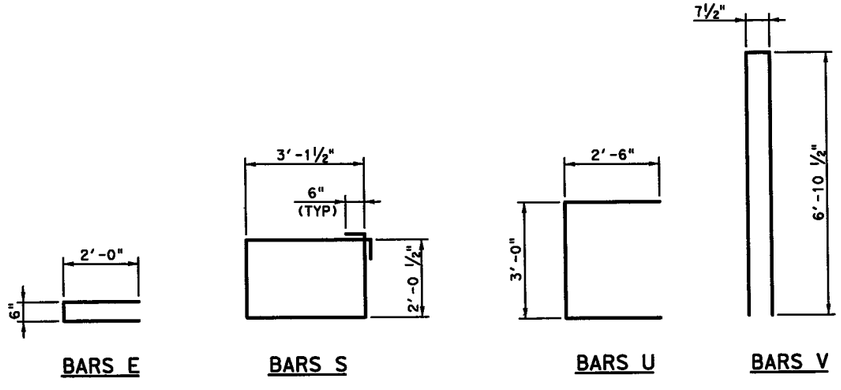

BARS E BARS S BARS U BARS V

HL 93 LOADING

P.E. Structural Consultants, Inc.
www.PEStructural.com
TBPE Firm No. F-1475

Texas Department of Transportation
© 2012

IH 35W FROM NORTH TARRANT PKWY TO IH 820

ABUTMENT NO. 9

NB IH 35W ML TO WB US 287

SCALE: NTS SHEET 2 OF 2

DESIGN	FED.RD. DIV.NO.	FEDERAL AID PROJECT NO.		HIGHWAY NO.
AEB	6	(SEE TITLE SHEET)		IH 35W
GRAPHICS TLS	STATE	DISTRICT	COUNTY	SHEET NO.
CHECK NRR	TEXAS	FTW	TARRANT	1441
CHECK AB	CONTROL	SECTION	JOB	
	0014	16	255, ETC.	

DRAWING DATE: 7/13/2012 FILENAME: S3BBR#MLN-287W#AB#04.dgn

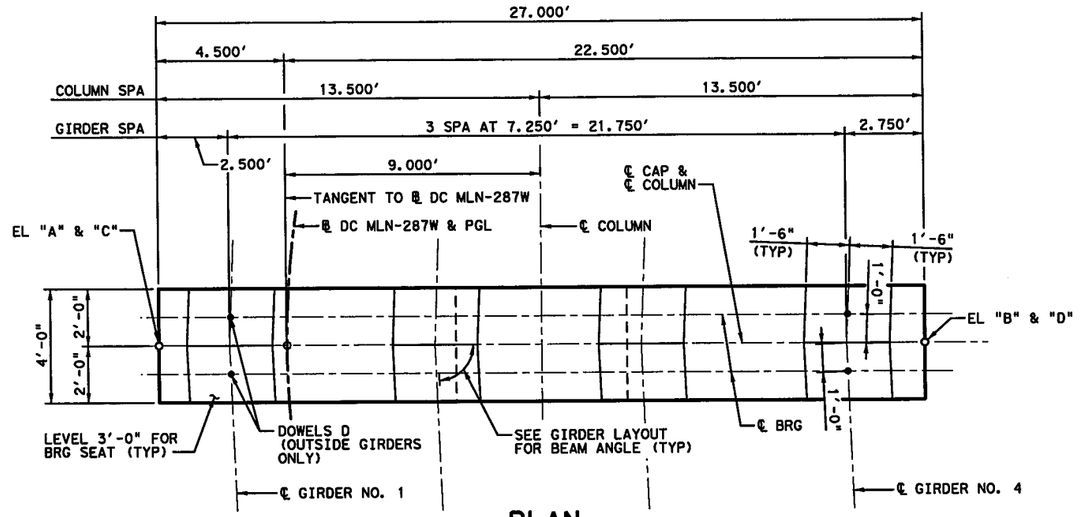

PLAN
(BENT 2)

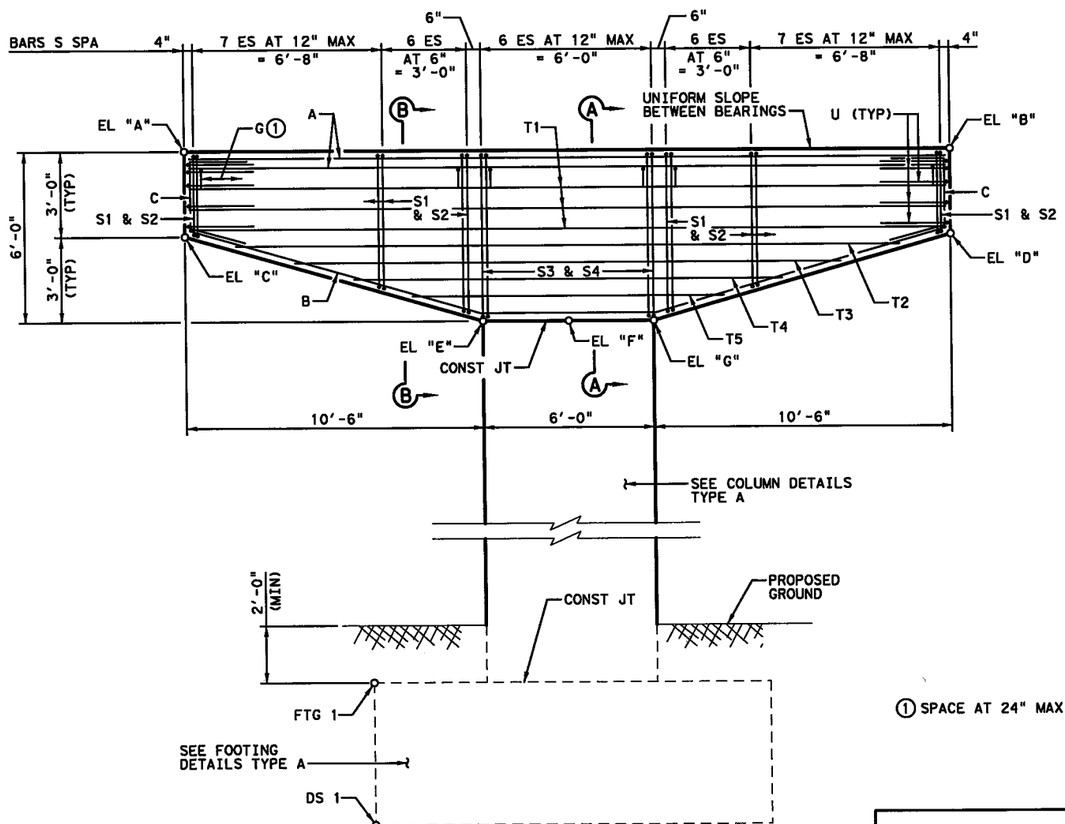

ELEVATION
(BENT 2)

① SPACE AT 24" MAX

TABLE OF ELEVATIONS

"A"	"B"	"C"	"D"	"E"	"F"	"G"	FTG 1	DS 1	DS TIP	AS-BUILT TIP
670.757	669.407	667.761	666.411	664.225	664.075	663.925	650.075	645.158	631.158	

TOP OF DRILLED SHAFT ELEVATIONS WERE ESTIMATED BASED ON GROUND ELEVATION INFORMATION AVAILABLE AT THE TIME OF DESIGN. CONTRACTOR SHALL CONFIRM THESE ELEVATIONS PRIOR TO DRILLING.

GENERAL NOTES:

1. DESIGNED ACCORDING TO AASHTO LRFD BRIDGE DESIGN SPECIFICATIONS, 5TH EDITION (2010).
2. CLASS "C"(HPC) CONCRETE STRENGTH F'C = 3,600 PSI.
3. ALL REINFORCING SHALL BE GRADE 60.
4. CALCULATED FOUNDATION LOAD:
   BENT 2: 290 TONS / D.S.
   BENT 7: 330 TONS / D.S.
   BENT 8: 295 TONS / D.S.

STATE OF TEXAS
NESTOR R. RUBIANO
94294
LICENSED PROFESSIONAL ENGINEER
7/06/2012

HL 93 LOADING

P.E. Structural Consultants, Inc.
www.PEStructural.com
TBPE Firm No. F-1475

Texas Department of Transportation
© 2012

IH 35W FROM NORTH TARRANT PKWY TO IH 820

INTERIOR BENT NO. 2, 7 & 8

NB IH 35W ML TO WB US 287

SCALE: NTS — SHEET 1 OF 4

DESIGN	FED.RD. DIV.NO.	FEDERAL AID PROJECT NO.		HIGHWAY NO.
AEB	6	(SEE TITLE SHEET)		IH 35W
GRAPHICS TLS	STATE	DISTRICT	COUNTY	SHEET NO.
CHECK NRR	TEXAS	FTW	TARRANT	1442
CHECK AB	CONTROL	SECTION	JOB	
	0014	16	255, ETC.	

FILENAME: S3BBR*MLN-287W*IB*01.dgn
DRAWING DATE: 7/13/2012

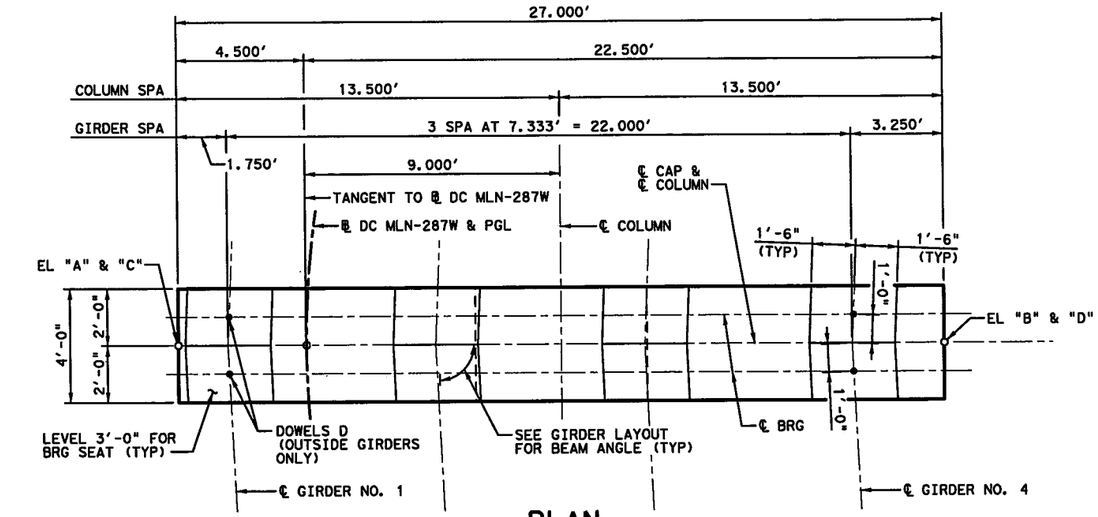

PLAN
(BENT 7)

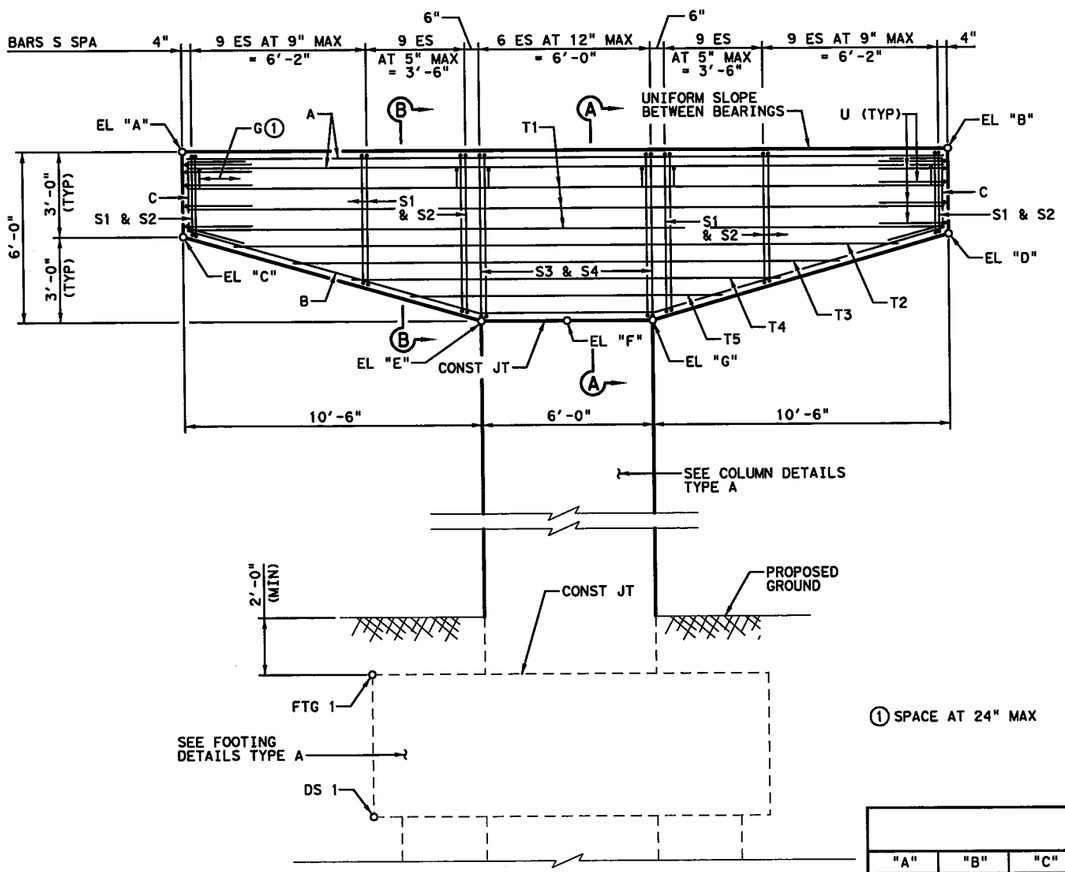

ELEVATION
(BENT 7)

① SPACE AT 24" MAX

TABLE OF ELEVATIONS

"A"	"B"	"C"	"D"	"E"	"F"	"G"	FTG 1	DS 1	DS TIP	AS-BUILT TIP
668.901	667.551	665.905	664.555	662.368	662.218	662.068	645.218	640.301	624.301	

TOP OF DRILLED SHAFT ELEVATIONS WERE ESTIMATED BASED ON GROUND ELEVATION INFORMATION AVAILABLE AT THE TIME OF DESIGN. CONTRACTOR SHALL CONFIRM THESE ELEVATIONS PRIOR TO DRILLING.

STATE OF TEXAS
NESTOR R. RUBIANO
94294
LICENSED PROFESSIONAL ENGINEER

7/06/2012

HL 93 LOADING

P.E. Structural Consultants, Inc.
www.PEStructural.com
TBPE Firm No. F-1475

Texas Department of Transportation
© 2012

IH 35W FROM NORTH TARRANT PKWY TO IH 820

INTERIOR BENT NO. 2, 7 & 8

NB IH 35W ML TO WB US 287

SCALE: NTS — SHEET 2 OF 4

DESIGN	FED.RD. DIV.NO.	FEDERAL AID PROJECT NO.		HIGHWAY NO.
AEB	6	(SEE TITLE SHEET)		IH 35W
GRAPHICS TLS	STATE	DISTRICT	COUNTY	SHEET NO.
CHECK NRR	TEXAS	FTW	TARRANT	1443
CHECK AB	CONTROL	SECTION	JOB	
	0014	16	255, ETC.	

FILENAME: S3BBR*MLN-287W*IB*09.dgn
DRAWING DATE: 7/13/2012

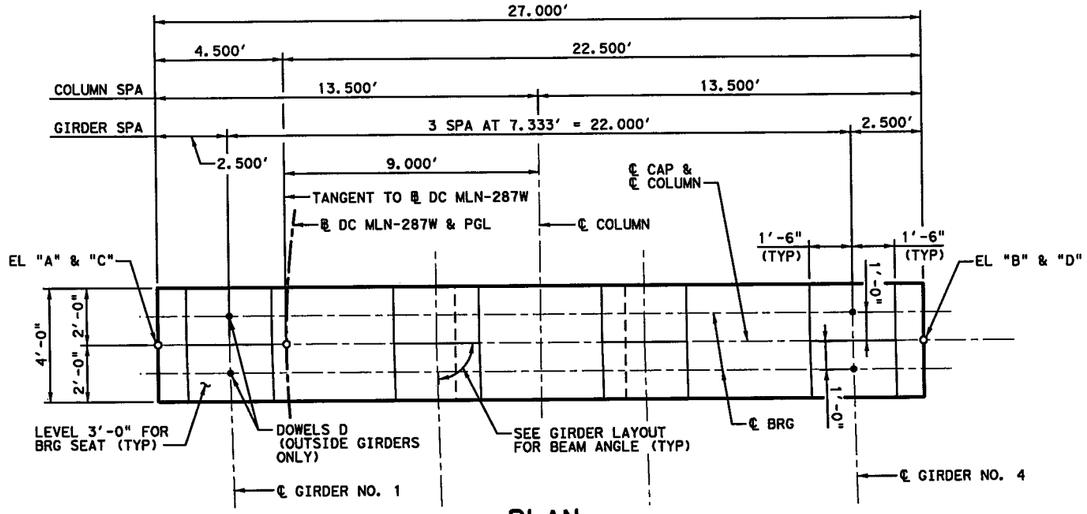

PLAN
(BENT 8)

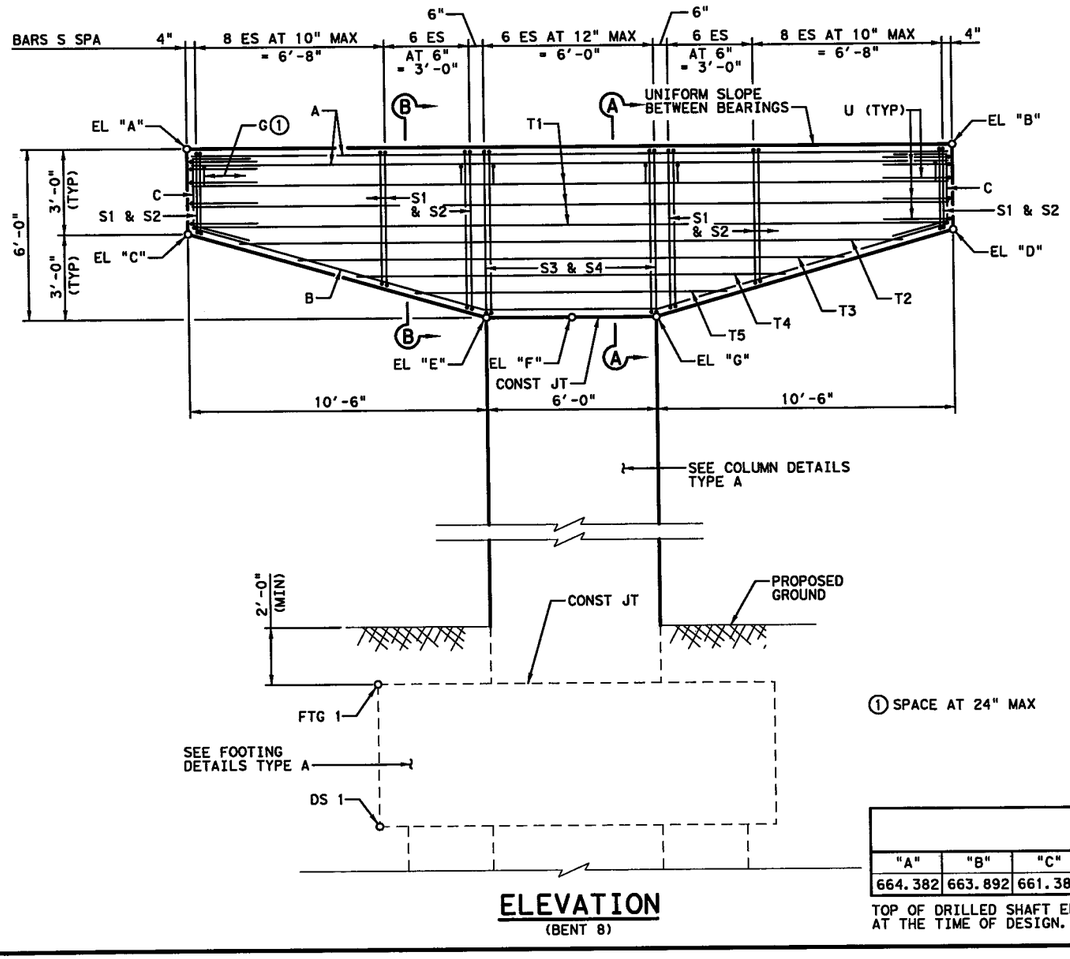

ELEVATION
(BENT 8)

① SPACE AT 24" MAX

THE TOP, SIDES, AND ENDS, EXCEPT UNDER BEARING AREAS, SHALL BE TREATED WITH A "CLASS II, TYPE I PENETRATING CONCRETE SURFACE TREATMENT"

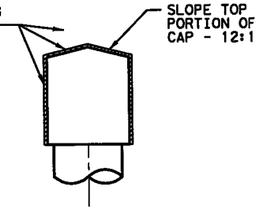

CONCRETE SURFACE TREATMENT DETAIL FOR INTERIOR BENT

TABLE OF ELEVATIONS

"A"	"B"	"C"	"D"	"E"	"F"	"G"	FTG 1	DS 1	DS TIP	AS-BUILT TIP
664.382	663.892	661.382	660.893	658.19	658.136	658.081	648.136	643.219	624.219	

TOP OF DRILLED SHAFT ELEVATIONS WERE ESTIMATED BASED ON GROUND ELEVATION INFORMATION AVAILABLE AT THE TIME OF DESIGN. CONTRACTOR SHALL CONFIRM THESE ELEVATIONS PRIOR TO DRILLING.

HL 93 LOADING

P.E. Structural Consultants, Inc.
www.PEStructural.com
TBPE Firm No. F-1475

Texas Department of Transportation
© 2012

IH 35W FROM NORTH TARRANT PKWY TO IH 820

INTERIOR BENT NO. 2, 7 & 8

NB IH 35W ML TO WB US 287

SCALE: NTS — SHEET 3 OF 4

DESIGN	FED.RD. DIV.NO.	FEDERAL AID PROJECT NO.		HIGHWAY NO.
AEB	6	(SEE TITLE SHEET)		IH 35W
GRAPHICS TLS	STATE	DISTRICT	COUNTY	SHEET NO.
CHECK NRR	TEXAS	FTW	TARRANT	1444
CHECK AB	CONTROL	SECTION	JOB	
	0014	16	255, ETC.	

FILENAME: S3BBR*MLN-287W*IB*10.dgn

DRAWING DATE: 7/13/2012

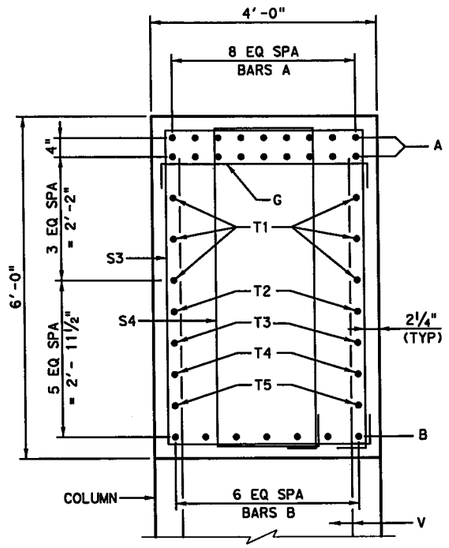

SECTION A-A

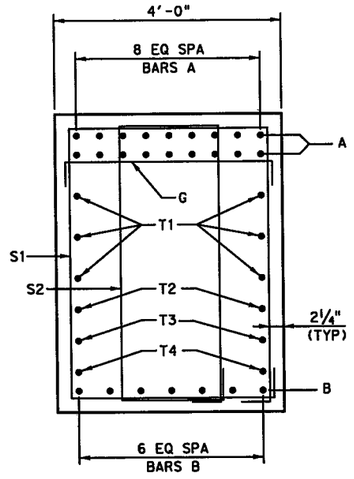

SECTION B-B

TABLE OF ESTIMATED QUANTITIES ~ BENT 2

BAR	NO.	SIZE	LENGTH	WEIGHT
A	18	#11	26'-8"	2,550
B	7	#11	27'-6"	1,023
S1	28	#5	16'-5" AVG	479
S2	28	#5	12'-8" AVG	370
S3	7	#5	19'-6"	142
S4	7	#5	15'-9"	115
C	14	#5	4'-7"	67
D	4	1 1/4" D	1'-8"	28
G	15	#4	4'-5"	44
T1	6	#7	26'-8"	327
T2	2	#7	23'-4"	95
T3	2	#7	19'-3"	79
T4	2	#7	15'-2"	62
T5	2	#7	11'-0"	45
U	10	#5	8'-7"	90
REINFORCING STEEL			LB	5,516
CL C CONC (HPC) (CAP)			CY	19.6

TABLE OF ESTIMATED QUANTITIES ~ BENT 7

BAR	NO.	SIZE	LENGTH	WEIGHT
A	18	#11	26'-8"	2,550
B	7	#11	27'-6"	1,023
E1	12	#5	5'-6"	69
E2	16	#5	4'-6"	75
S1	30	#5	16'-5" AVG	514
S2	30	#5	12'-8" AVG	396
S3	7	#5	19'-6"	142
S4	7	#5	15'-9"	115
C	14	#5	4'-7"	67
D	4	1 1/4" D	1'-8"	28
G	15	#4	4'-5"	44
T1	6	#7	26'-8"	327
T2	2	#7	23'-4"	95
T3	2	#7	19'-3"	79
T4	2	#7	15'-2"	62
T5	2	#7	11'-0"	45
U	10	#5	8'-7"	90
REINFORCING STEEL			LB	5,721
CL C CONC (HPC) (CAP)			CY	19.7

TABLE OF ESTIMATED QUANTITIES ~ BENT 8

BAR	NO.	SIZE	LENGTH	WEIGHT
A	18	#11	26'-8"	2,550
B	7	#11	27'-6"	1,023
E1	12	#5	5'-6"	69
E2	16	#5	4'-6"	75
S1	38	#5	16'-5" AVG	651
S2	38	#5	12'-8" AVG	502
S3	7	#5	19'-6"	142
S4	7	#5	15'-9"	115
C	14	#5	4'-7"	67
D	4	1 1/4" D	1'-8"	28
G	15	#4	4'-5"	44
T1	6	#7	26'-8"	327
T2	2	#7	23'-4"	95
T3	2	#7	19'-3"	79
T4	2	#7	15'-2"	62
T5	2	#7	11'-0"	45
U	10	#5	8'-7"	90
REINFORCING STEEL			LB	5,964
CL C CONC (HPC) (CAP)			CY	19.7

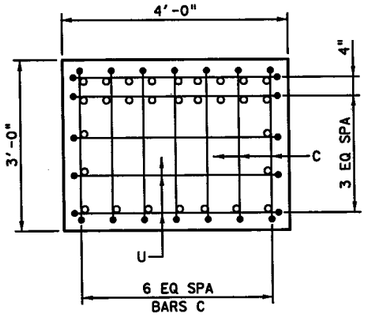

CAP END VIEW

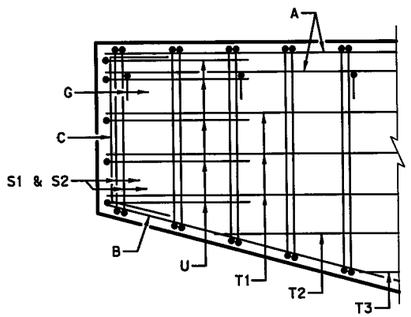

CAP END DETAIL

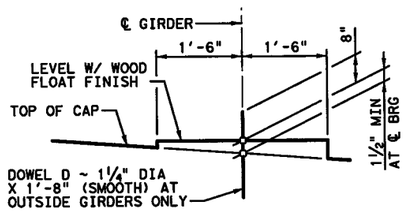

HEIGHTS UNDER 3"

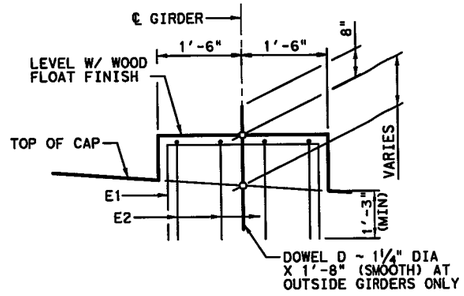

HEIGHTS OVER 3"

BEARING SEAT DETAILS

(BEARING SURFACE MUST BE CLEAN AND FREE OF ALL LOOSE MATERIAL BEFORE PLACING BEARING PAD.)

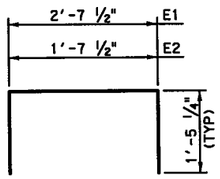

BARS E1 & E2

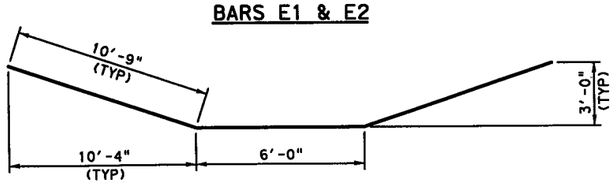

BARS B

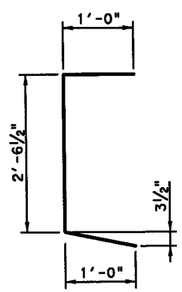

BARS C

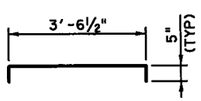

BARS G

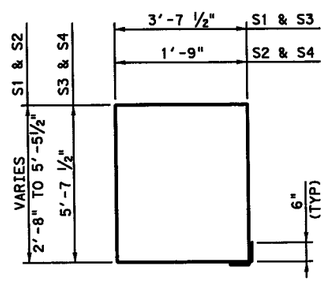

BARS S

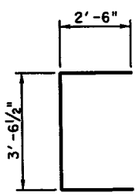

BARS U

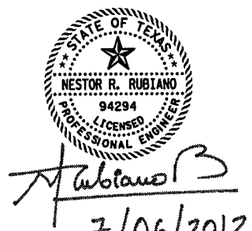

7/06/2012

HL 93 LOADING

PESC P.E. Structural Consultants, Inc.
www.PEStructural.com
TBPE Firm No. F-1475

Texas Department of Transportation
© 2012

IH 35W FROM NORTH TARRANT PKWY TO IH 820

INTERIOR BENT NO. 2, 7 & 8

NB IH 35W ML TO WB US 287

SCALE: NTS — SHEET 4 OF 4

DESIGN	FED. RD. DIV. NO.	FEDERAL AID PROJECT NO.		HIGHWAY NO.
AEB	6	(SEE TITLE SHEET)		IH 35W
GRAPHICS TLS	STATE	DISTRICT	COUNTY	SHEET NO.
CHECK NRR	TEXAS	FTW	TARRANT	1445
CHECK AB	CONTROL	SECTION	JOB	
	0014	16	255, ETC.	

FILENAME: S3BBR*ML*N-287W*IB*02.dgn

DRAWING DATE: 7/13/2012

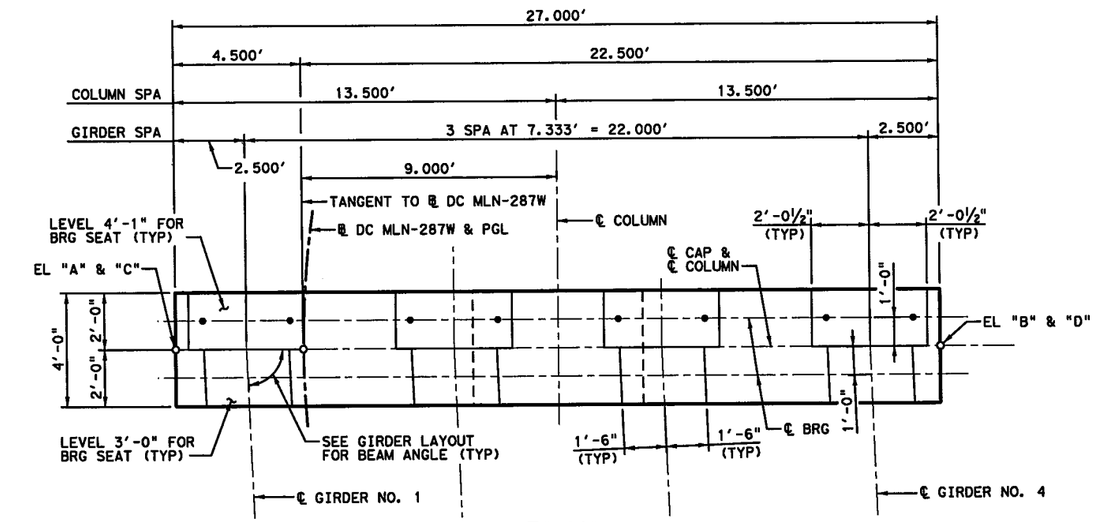

PLAN
(BENT 3)

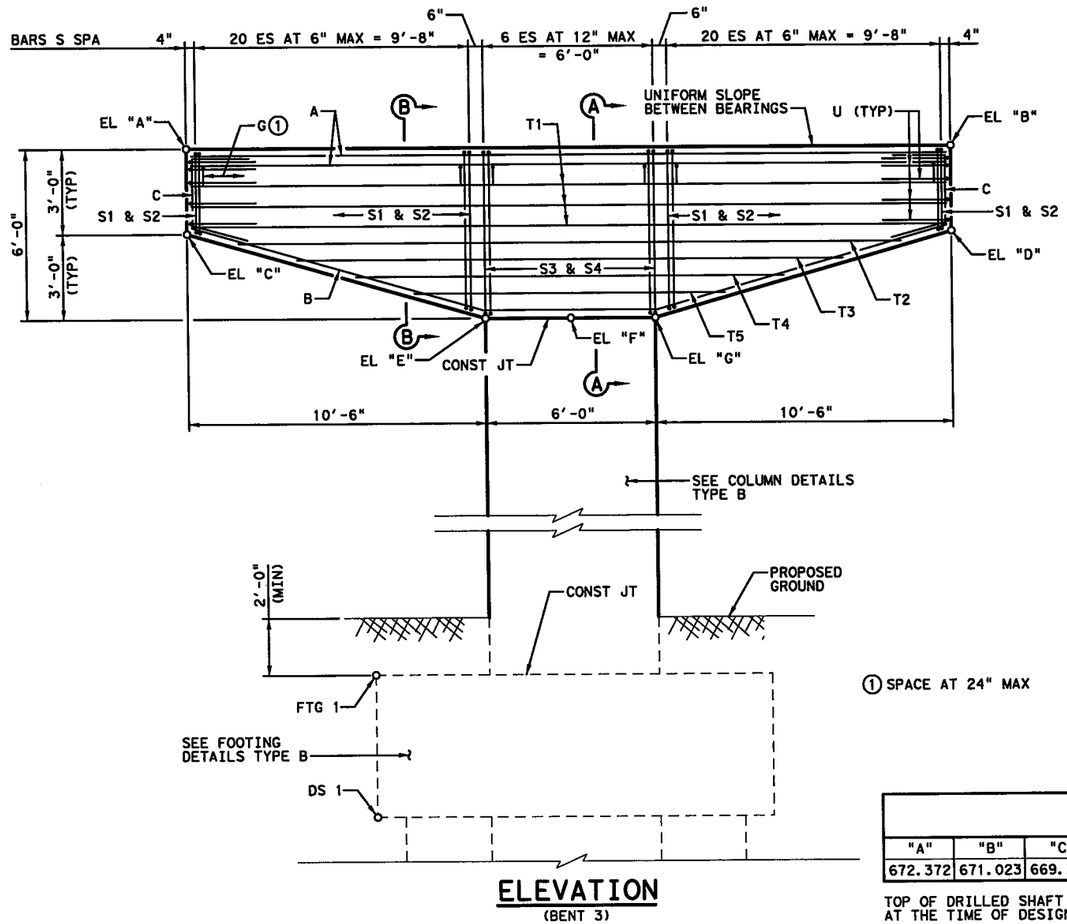

ELEVATION
(BENT 3)

① SPACE AT 24" MAX

TABLE OF ELEVATIONS

"A"	"B"	"C"	"D"	"E"	"F"	"G"	FTG 1	DS 1	DS TIP	AS-BUILT TIP
672.372	671.023	669.376	668.027	665.84	665.690	665.540	646.690	641.773	626.773	

TOP OF DRILLED SHAFT ELEVATIONS WERE ESTIMATED BASED ON GROUND ELEVATION INFORMATION AVAILABLE AT THE TIME OF DESIGN. CONTRACTOR SHALL CONFIRM THESE ELEVATIONS PRIOR TO DRILLING.

GENERAL NOTES:

1. DESIGNED ACCORDING TO AASHTO LRFD BRIDGE DESIGN SPECIFICATIONS, 5TH EDITION (2010).
2. CLASS "C" (HPC) CONCRETE STRENGTH F'C = 3,600 PSI.
3. ALL REINFORCING SHALL BE GRADE 60.
4. CALCULATED FOUNDATION LOAD:
   BENT 3: 435 TONS / D.S.
   BENT 6: 395 TONS / D.S.

STATE OF TEXAS
NESTOR R. RUBIANO
94294
LICENSED PROFESSIONAL ENGINEER
7/06/2012

HL 93 LOADING

PESC
P.E. Structural Consultants, Inc.
www.PEStructural.com
TBPE Firm No. F-1475

Texas Department of Transportation
© 2012

IH 35W FROM NORTH TARRANT PKWY TO IH 820

INTERIOR BENT NO. 3 & 6

NB IH 35W ML TO WB US 287

SCALE: NTS — SHEET 1 OF 3

DESIGN	FED.RD. DIV.NO.	FEDERAL AID PROJECT NO.		HIGHWAY NO.
AEB	6	(SEE TITLE SHEET)		IH 35W
GRAPHICS	STATE	DISTRICT	COUNTY	SHEET NO.
TLS	TEXAS	FTW	TARRANT	
CHECK	CONTROL	SECTION	JOB	1446
NRR	0014	16	255, ETC.	
CHECK				
AB				

FILENAME: S3BBR#ML N-287W#IB#03.dgn
DRAWING DATE: 7/13/2012

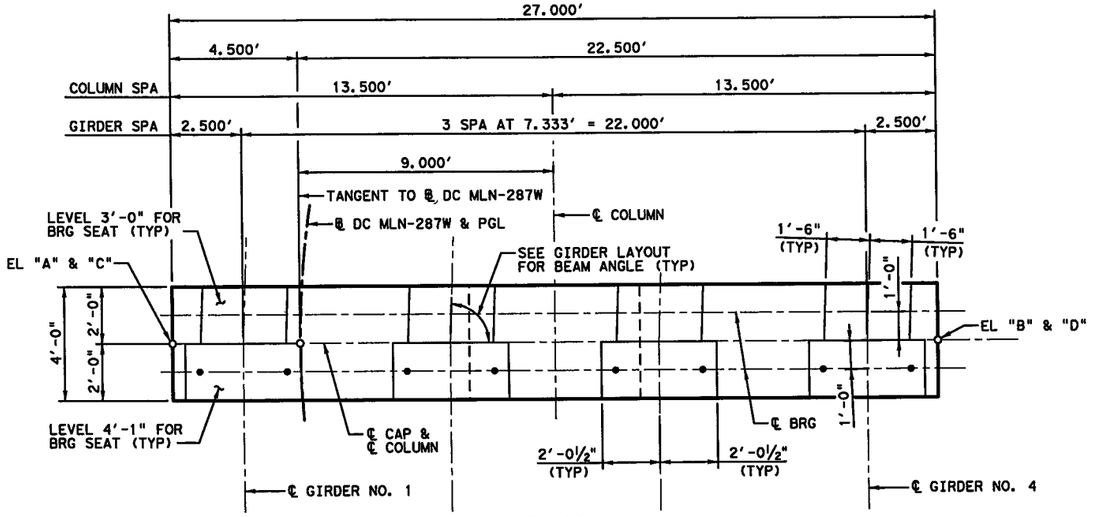

PLAN
(BENT 6)

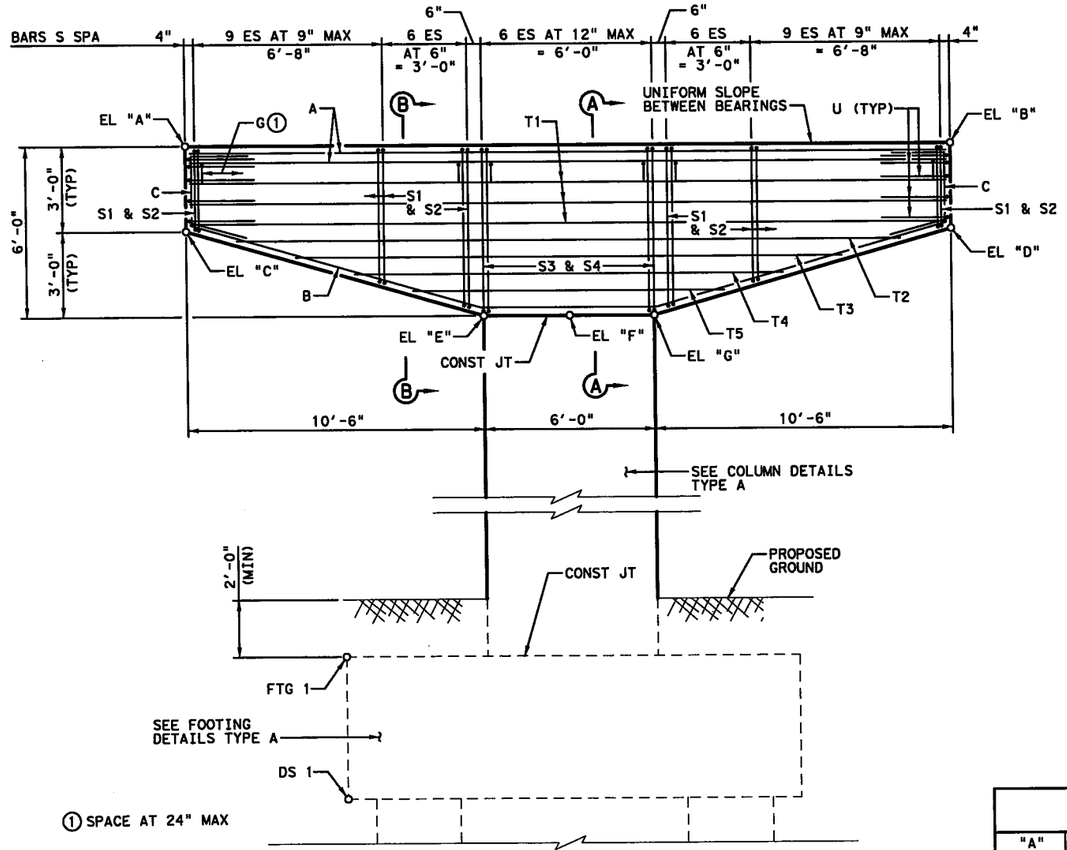

ELEVATION
(BENT 6)

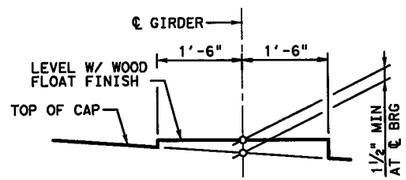

HEIGHTS 3" OR LESS

BEARING SEAT DETAIL
(CONCRETE I-GIRDERS)
(BEARING SURFACE MUST BE CLEAN AND FREE OF ALL LOOSE MATERIAL BEFORE PLACING BEARING PAD.)

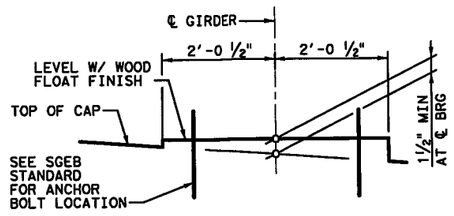

HEIGHTS 3" OR LESS

BEARING SEAT DETAIL
(STEEL PLATE GIRDERS)
(BEARING SURFACE MUST BE CLEAN AND FREE OF ALL LOOSE MATERIAL BEFORE PLACING BEARING PAD.)

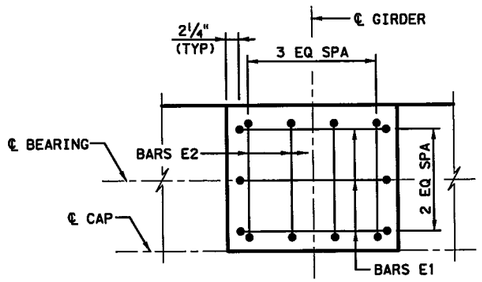

PLAN

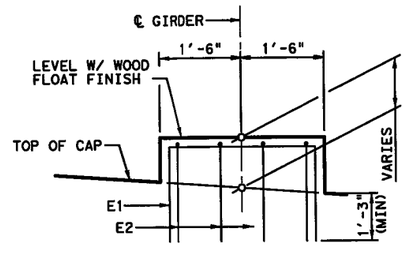

ELEVATION

HEIGHTS OVER 3"

BEARING SEAT & PEDESTAL DETAIL ~ I-GIRDERS
(BEARING SURFACE MUST BE CLEAN AND FREE OF ALL LOOSE MATERIAL BEFORE PLACING BEARING PAD.)

TABLE OF ELEVATIONS										
"A"	"B"	"C"	"D"	"E"	"F"	"G"	FTG 1	DS 1	DS TIP	AS-BUILT TIP
673.420	672.070	670.424	669.074	666.887	666.737	666.587	647.737	642.820	627.820	

TOP OF DRILLED SHAFT ELEVATIONS WERE ESTIMATED BASED ON GROUND ELEVATION INFORMATION AVAILABLE AT THE TIME OF DESIGN. CONTRACTOR SHALL CONFIRM THESE ELEVATIONS PRIOR TO DRILLING.

STATE OF TEXAS
NESTOR R. RUBIANO
94294
LICENSED PROFESSIONAL ENGINEER

7/06/2012

HL 93 LOADING

PESC
P.E. Structural Consultants, Inc.
www.PEStructural.com
TBPE Firm No. F-1475

Texas Department of Transportation
© 2012

IH 35W FROM NORTH TARRANT PKWY TO IH 820

INTERIOR BENT NO. 3 & 6

NB IH 35W ML TO WB US 287

SCALE: NTS — SHEET 2 OF 3

DESIGN	FED.RD. DIV.NO.	FEDERAL AID PROJECT NO.		HIGHWAY NO.
AEB	6	(SEE TITLE SHEET)		IH 35W
GRAPHICS TLS	STATE	DISTRICT	COUNTY	SHEET NO.
CHECK NRR	TEXAS	FTW	TARRANT	1447
CHECK AB	CONTROL 0014	SECTION 16	JOB 255, ETC.	

FILENAME: S3BBR#MLN-287W#IB#11.dgn
DRAWING DATE: 7/13/2012

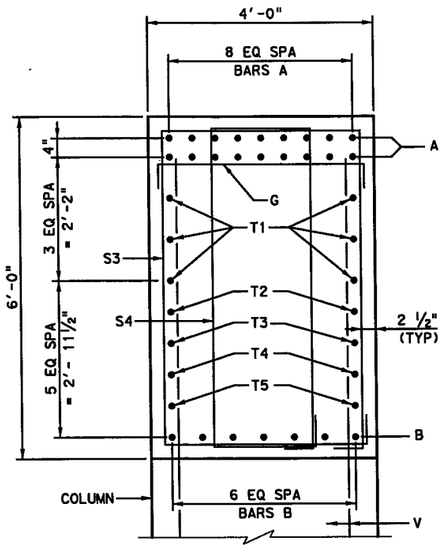

SECTION A-A

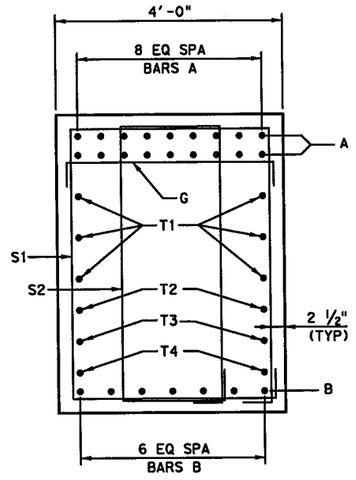

SECTION B-B

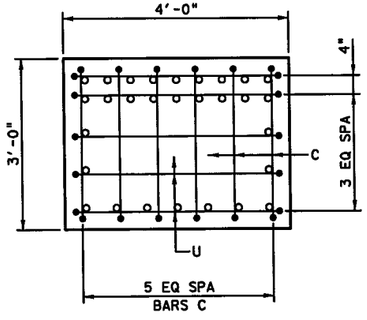

CAP END VIEW

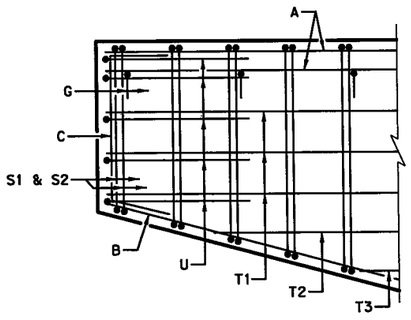

CAP END DETAIL

THE TOP, SIDES, AND ENDS, EXCEPT UNDER BEARING AREAS, SHALL BE TREATED WITH A "CLASS II, TYPE I PENETRATING CONCRETE SURFACE TREATMENT"

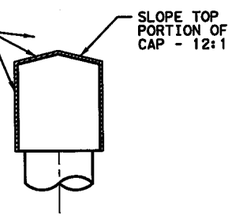

CONCRETE SURFACE TREATMENT DETAIL FOR INTERIOR BENT

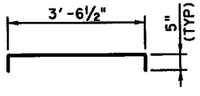

BARS G

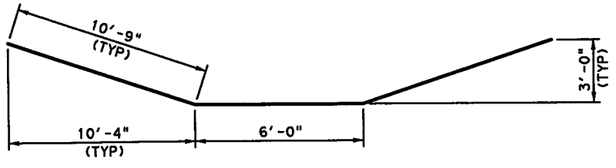

BARS B

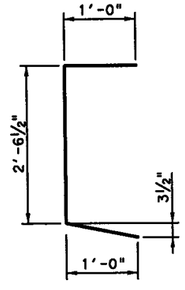

BARS C

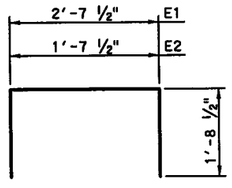

BARS E1 & E2

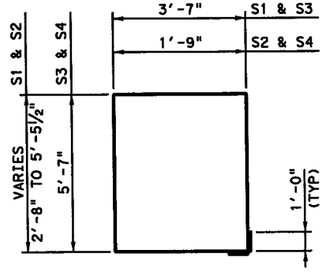

BARS S

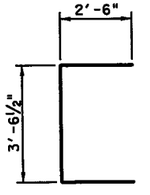

BARS U

TABLE OF ESTIMATED QUANTITIES ~ BENT 3

BAR	NO.	SIZE	LENGTH	WEIGHT
A	18	#11	26'-8"	2,550
B	7	#11	27'-6"	1,023
E1	12	#5	6'-1"	76
E2	16	#5	5'-1"	85
S1	42	#6	17'-4"	1,093
S2	42	#6	13'-8" AVG	862
S3	7	#6	20'-4" AVG	214
S4	7	#6	16'-8"	175
C	12	#5	4'-7"	57
G	15	#4	4'-5"	44
T1	6	#7	26'-8"	327
T2	2	#7	23'-4"	95
T3	2	#7	19'-3"	79
T4	2	#7	15'-2"	62
T5	2	#7	11'-0"	45
U	10	#5	8'-7"	90
REINFORCING STEEL			LB	6,877
CL C CONC (HPC) (CAP)			CY	20.0

TABLE OF ESTIMATED QUANTITIES ~ BENT 6

BAR	NO.	SIZE	LENGTH	WEIGHT
A	18	#11	26'-8"	2,550
B	7	#11	27'-6"	1,023
S1	32	#6	17'-4"	833
S2	32	#6	13'-8" AVG	657
S3	7	#6	20'-4" AVG	214
S4	7	#6	16'-8"	175
C	12	#5	4'-7"	57
G	15	#4	4'-5"	44
T1	6	#7	26'-8"	327
T2	2	#7	23'-4"	95
T3	2	#7	19'-3"	79
T4	2	#7	15'-2"	62
T5	2	#7	11'-0"	45
U	10	#5	8'-7"	90
REINFORCING STEEL			LB	6,251
CL C CONC (HPC) (CAP)			CY	19.7

STATE OF TEXAS
NESTOR R. RUBIANO
94294
LICENSED
PROFESSIONAL ENGINEER
7/06/2012

HL 93 LOADING

PESC
P.E. Structural Consultants, Inc.
www.PEStructural.com
TBPE Firm No. F-1475

Texas Department of Transportation
© 2012

IH 35W FROM NORTH TARRANT PKWY TO IH 820

INTERIOR BENT NO. 3 & 6

NB IH 35W ML TO WB US 287

SCALE: NTS — SHEET 3 OF 3

DESIGN	FED. RD. DIV. NO.	FEDERAL AID PROJECT NO.		HIGHWAY NO.
AEB	6	(SEE TITLE SHEET)		IH 35W
GRAPHICS TLS	STATE	DISTRICT	COUNTY	SHEET NO.
CHECK NRR	TEXAS	FTW	TARRANT	1448
CHECK AB	CONTROL 0014	SECTION 16	JOB 255, ETC.	

FILENAME: S3BBR*MLN-287W*IB#04.dgn
DRAWING DATE: 7/13/2012

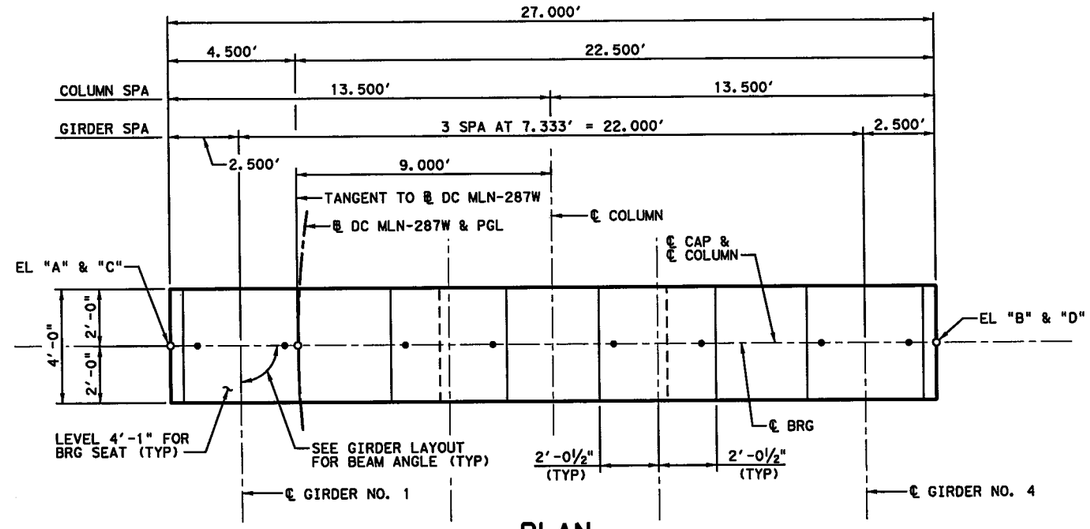

PLAN

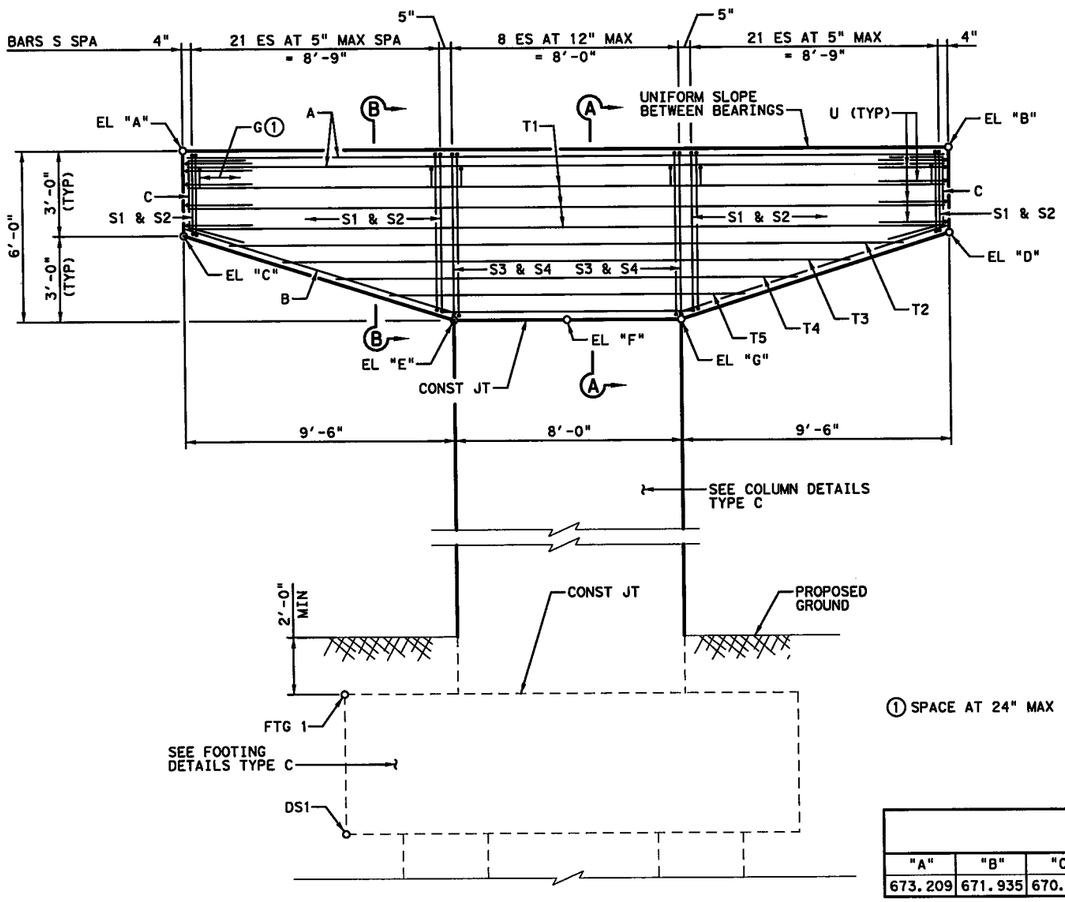

ELEVATION

① SPACE AT 24" MAX

TABLE OF ELEVATIONS

"A"	"B"	"C"	"D"	"E"	"F"	"G"	FTG 1	DS 1	DS TIP	AS-BUILT TIP
673.209	671.935	670.212	668.938	666.754	666.565	666.377	649.565	644.648	608.648	

TOP OF DRILLED SHAFT ELEVATIONS WERE ESTIMATED BASED ON GROUND ELEVATION INFORMATION AVAILABLE AT THE TIME OF DESIGN. CONTRACTOR SHALL CONFIRM THESE ELEVATIONS PRIOR TO DRILLING.

GENERAL NOTES:

1. DESIGNED ACCORDING TO AASHTO LRFD BRIDGE DESIGN SPECIFICATIONS, 5TH EDITION (2010).
2. CLASS "C"(HPC) CONCRETE STRENGTH F'C = 3,600 PSI.
3. ALL REINFORCING SHALL BE GRADE 60.
4. CALCULATED FOUNDATION LOAD: 680 TONS / D.S.

STATE OF TEXAS
NESTOR R. RUBIANO
94294
LICENSED PROFESSIONAL ENGINEER

7/06/2012

HL 93 LOADING

PESC
P.E. Structural Consultants, Inc.
www.PEStructural.com
TBPE Firm No. F-1475

Texas Department of Transportation

© 2012

IH 35W FROM NORTH TARRANT PKWY TO IH 820

INTERIOR BENT NO. 4

NB IH 35W ML TO WB US 287

SCALE: NTS — SHEET 1 OF 2

DESIGN	FED. RD. DIV. NO.	FEDERAL AID PROJECT NO.		HIGHWAY NO.
AEB	6	(SEE TITLE SHEET)		IH 35W
GRAPHICS TLS	STATE	DISTRICT	COUNTY	SHEET NO.
CHECK NRR	TEXAS	FTW	TARRANT	1449
CHECK AB	CONTROL	SECTION	JOB	
	0014	16	255, ETC.	

DRAWING DATE: 7/13/2012 FILENAME: S3BBR*MLN-287W*IB*05.dgn

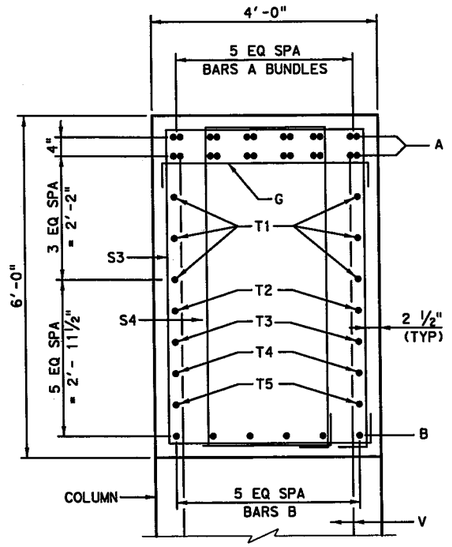

SECTION A-A

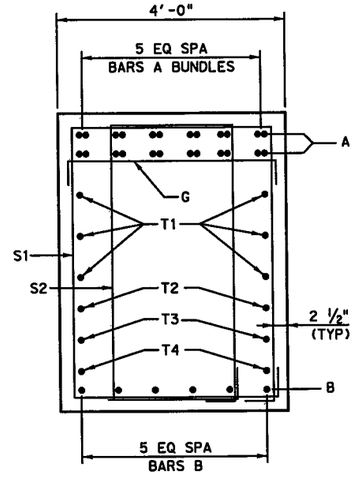

SECTION B-B

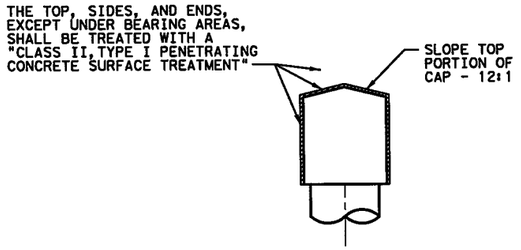

CONCRETE SURFACE TREATMENT DETAIL FOR INTERIOR BENT

TABLE OF ESTIMATED QUANTITIES

BAR	NO.	SIZE	LENGTH	WEIGHT
A	24	#11	26'-8"	3,400
B	6	#11	27'-8"	882
S1	44	#6	17'-4" AVG	1,146
S2	44	#6	14'-2" AVG	936
S3	9	#6	20'-4"	275
S4	9	#6	17'-2"	232
C	12	#5	4'-7"	57
G	15	#4	4'-5"	44
T1	6	#7	26'-8"	327
T2	2	#7	23'-9"	97
T3	2	#7	20'-0"	82
T4	2	#7	16'-3"	66
T5	2	#7	12'-6"	51
U	10	#5	8'-7"	90
REINFORCING STEEL			LB	7,685
CL C CONC (HPC) (CAP)			CY	20.1

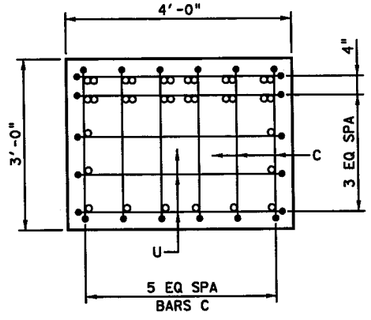

CAP END VIEW

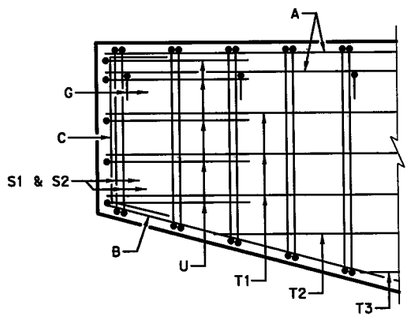

CAP END DETAIL

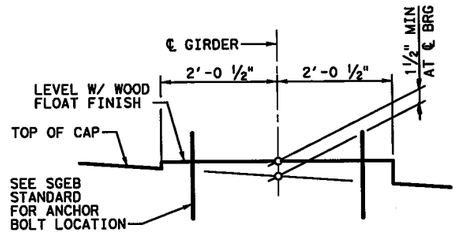

BEARING SEAT DETAIL

(STEEL PLATE GIRDERS)
(BEARING SURFACE MUST BE CLEAN AND FREE OF ALL LOOSE MATERIAL BEFORE PLACING BEARING PAD.)

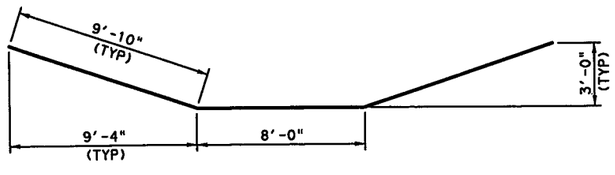

BARS B

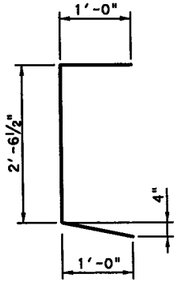

BARS C

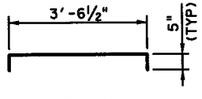

BARS G

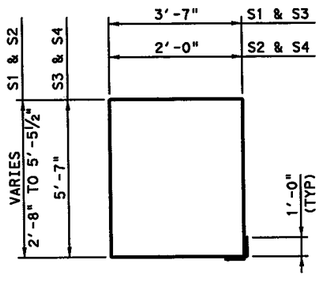

BARS S

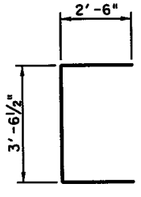

BARS U

STATE OF TEXAS
NESTOR R. RUBIANO
94294
LICENSED
PROFESSIONAL ENGINEER
7/06/2012

HL 93 LOADING

PESC P.E. Structural Consultants, Inc.
www.PEStructural.com
TBPE Firm No. F-1475

Texas Department of Transportation
© 2012

IH 35W FROM NORTH TARRANT PKWY TO IH 820

INTERIOR BENT NO. 4

NB IH 35W ML TO WB US 287

SCALE: NTS SHEET 2 OF 2

DESIGN	FED. RD. DIV. NO.	FEDERAL AID PROJECT NO.		HIGHWAY NO.
AEB	6	(SEE TITLE SHEET)		IH 35W
GRAPHICS TLS	STATE	DISTRICT	COUNTY	SHEET NO.
CHECK NRR	TEXAS	FTW	TARRANT	1450
CHECK AB	CONTROL	SECTION	JOB	
	0014	16	255, ETC.	

DRAWING DATE: 7/13/2012 FILENAME: S3BBR#MLN-287W#IB#06.dgn

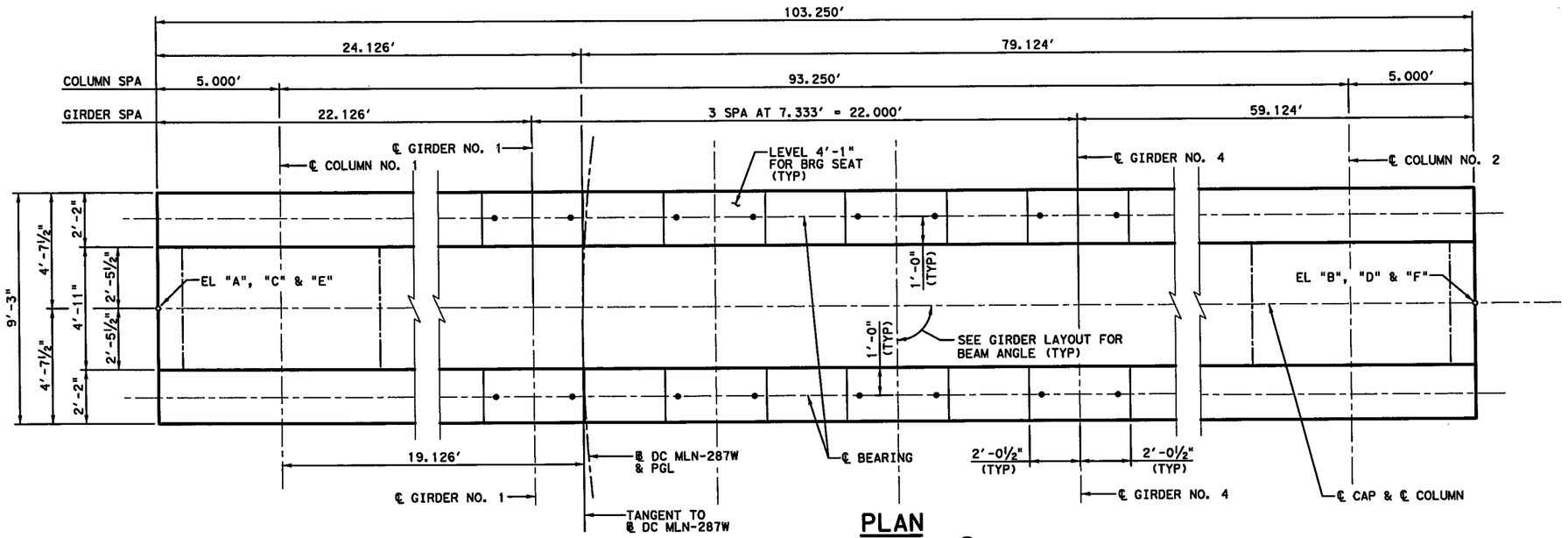

PLAN

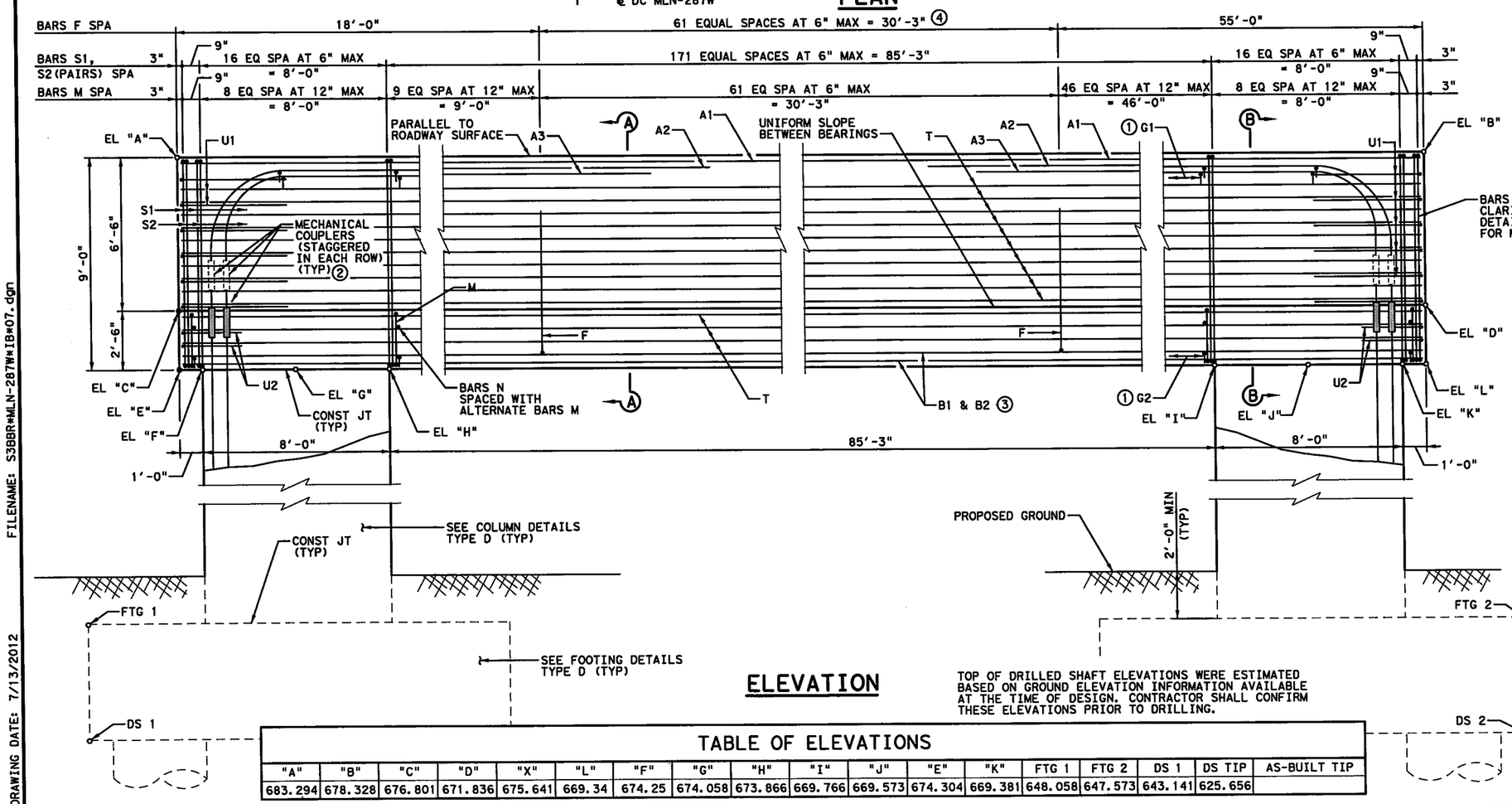

ELEVATION

TOP OF DRILLED SHAFT ELEVATIONS WERE ESTIMATED BASED ON GROUND ELEVATION INFORMATION AVAILABLE AT THE TIME OF DESIGN. CONTRACTOR SHALL CONFIRM THESE ELEVATIONS PRIOR TO DRILLING.

TABLE OF ELEVATIONS

"A"	"B"	"C"	"D"	"X"	"L"	"F"	"G"	"H"	"I"	"J"	"E"	"K"	FTG 1	FTG 2	DS 1	DS TIP	AS-BUILT TIP
683.294	678.328	676.801	671.836	675.641	669.34	674.25	674.058	673.866	669.766	669.573	674.304	669.381	648.058	647.573	643.141	625.656	

GENERAL NOTES:

1. DESIGNED ACCORDING TO AASHTO LRFD BRIDGE DESIGN SPECIFICATIONS, 5TH EDITION (2010).
2. THE ENGINEER SHALL BE CONTACTED PRIOR TO ANY AND/OR ALL ACTIVITIES RELATED TO BENT CONSTRUCTION INCLUDING BUT NOT LIMITED TO FORMING, REBAR ASSEMBLY, ETC.
3. CLASS "F" (HPC) CONCRETE STRENGTH F'C = 5,000 PSI.
4. ALL REINFORCING SHALL BE GRADE 60.
5. CALCULATED FOUNDATION LOAD: 520 TONS / D.S.
6. CONTRACTOR SHALL FIELD ADJUST CAP REINFORCEMENT TO AVOID CONFLICT WITH COLUMN REINFORCEMENT. MINIMUM CLEAR SPACING BETWEEN PARALLEL BARS SHALL NOT BE LESS THAN 2 ½".

① SPACE AT 24" MAX

② SEE "MECH COUPLER STAGGERING DETAIL" IN SHEET 2 OF 3

③ BARS B2 SHALL BE CENTERED BETWEEN COLUMNS

④ SPACE WITH BARS S

STATE OF TEXAS
NESTOR R. RUBIANO
94294
LICENSED PROFESSIONAL ENGINEER
7/06/2012

HL 93 LOADING

PESC
P.E. Structural Consultants, Inc.
www.PEStructural.com
TBPE Firm No. F-1475

Texas Department of Transportation
© 2012

IH 35W FROM NORTH TARRANT PKWY TO IH 820

INTERIOR BENT NO. 5

NB IH 35W ML TO WB US 287

SCALE: NTS — SHEET 1 OF 3

DESIGN	FED.RD. DIV.NO.	FEDERAL AID PROJECT NO.		HIGHWAY NO.
AEB	6	(SEE TITLE SHEET)		IH 35W
GRAPHICS	STATE	DISTRICT	COUNTY	SHEET NO.
TLS	TEXAS	FTW	TARRANT	1451
CHECK	CONTROL	SECTION	JOB	
NRR	0014	16	255, ETC.	
CHECK				
AB				

FILENAME: S3BBR#MLN-287W#IB#07.dgn

DRAWING DATE: 7/13/2012

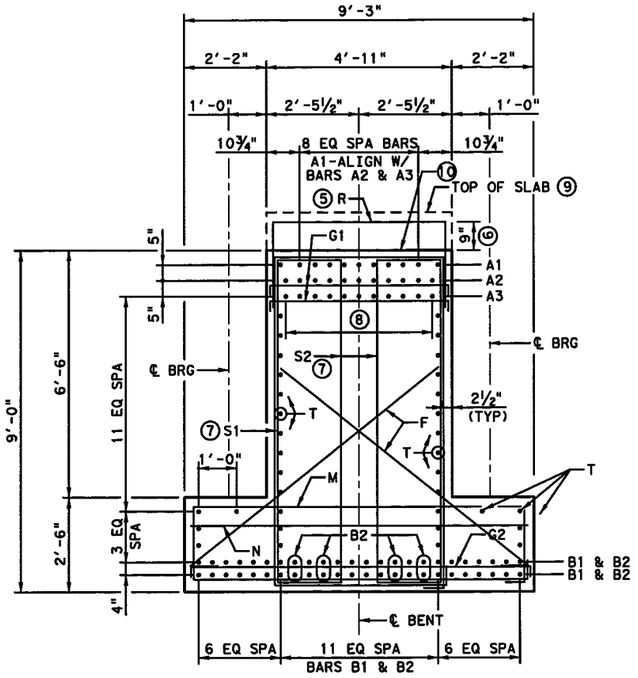

SECTION A-A

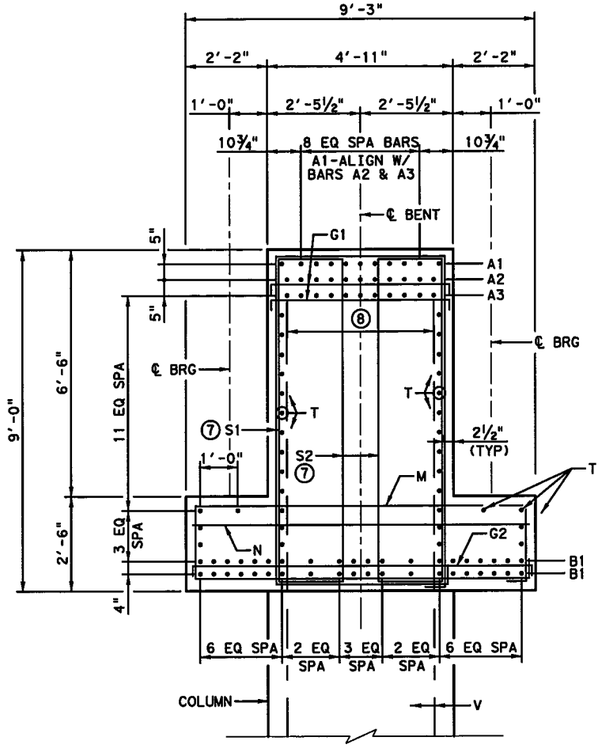

SECTION B-B

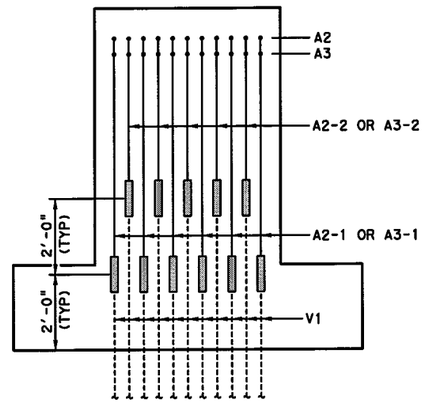

MECH COUPLER STAGGERING DETAIL

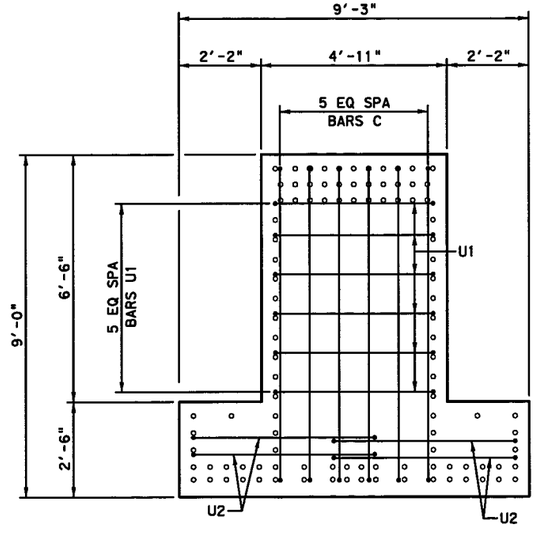

CAP END VIEW

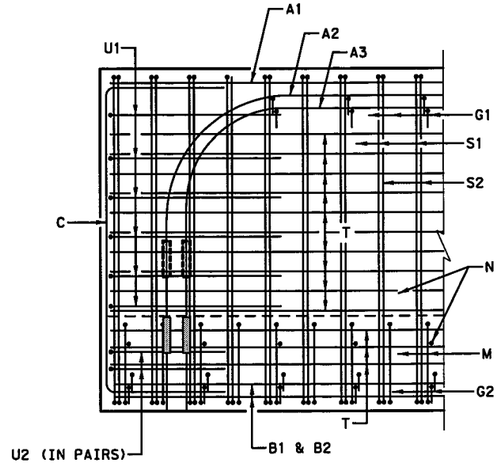

CAP END DETAIL

⑤ SPACED AT 6" MAX ALONG CAP LENGTH. SEE UNIT SHEET PLANS FOR ADDITIONAL SLAB REINFORCING NOT SHOWN HERE.

⑥ TOP OF BAR SHALL BE PARALLEL TO ROADWAY SLOPE. ADJUST AS REQUIRED TO MAINTAIN 2 ½" FROM FINISHED GRADE AND 1'-0" MINIMUM EMBEDMENT INTO CAP.

⑦ PLACE HOOKS OF STIRRUP AT BOTTOM OF CAP AS SHOWN

⑧ 10 EQ SPA - BARS A2 & A3 - MATCH COLUMN BARS V

⑨ CAST AFTER ADJACENT CONCRETE SLABS

⑩ ROUGHEN CONCRETE AT TOP OF CAP PRIOR TO HARDENING

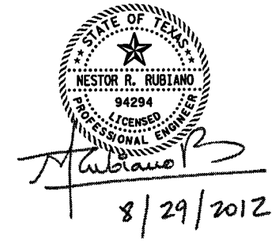

HL 93 LOADING

PESC
P.E. Structural Consultants, Inc.
www.PEStructural.com
TBPE Firm No. F-1475

Texas Department of Transportation

© 2012

IH 35W FROM NORTH TARRANT PKWY TO IH 820

INTERIOR BENT NO. 5

NB IH 35W ML TO WB US 287

SCALE: NTS

DESIGN	FED.RD. DIV.NO.	FEDERAL AID PROJECT NO.		HIGHWAY NO.
AEB	6	(SEE TITLE SHEET)		IH 35W
GRAPHICS TLS	STATE	DISTRICT	COUNTY	SHEET NO.
CHECK NRR	TEXAS	FTW	TARRANT	1452
CHECK AB	CONTROL	SECTION	JOB	
	0014	16	255, ETC.	

DRAWING DATE: 7/13/2012 FILENAME: S3BBR*MLN-287W*IB*08.dgn

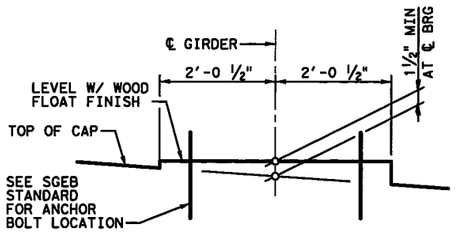

BEARING SEAT DETAIL

(STEEL PLATE GIRDERS)
(BEARING SURFACE MUST BE CLEAN AND FREE OF ALL LOOSE MATERIAL BEFORE PLACING BEARING PAD.)

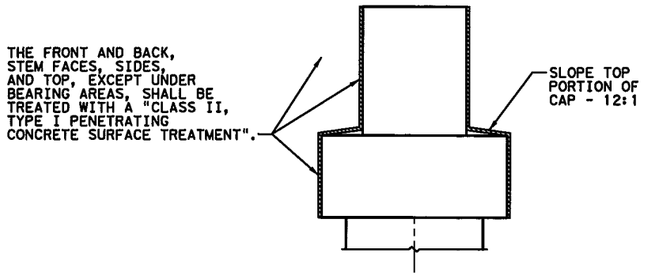

CONCRETE SURFACE TREATMENT DETAIL FOR INV.-TEE BENT

TABLE OF ESTIMATED QUANTITIES

	BAR	NO.	SIZE	LENGTH	WEIGHT
(11)	A1	11	#14	102'-11"	8,660
(11)	A2-1	12	#14	41'-3"	3,787
(11)	A2-2	10	#14	39'-3"	3,003
(11)	A3-1	12	#14	30'-10"	2,831
(11)	A3-2	10	#14	28'-10"	2,206
(11)	B1	40	#11	102'-11"	21,872
(11)	B2	8	#11	85'-3"	3,623
	C	12	#5	16'-6"	207
	F	124	#5	9'-6"	1,229
	G1	60	#4	5'-4"	214
	G2	53	#4	9'-8"	342
	M	135	#6	23'-10"	4,833
	N	68	#6	8'-11"	911
	R	57	#4	8'-6"	324
	S1	206	#6	28'-2"	8,715
	S2	412	#6	22'-8"	14,027
(12)	T	34	#7	105'-0"	7,297
	U1	12	#5	13'-5"	168
	U2	8	#5	12'-10"	107
REINFORCING STEEL				LB	84,356
CL F CONC (MASS) (HPC) (CAP)				CY	211.1

(11) INCLUDES ONE CLASS B MECH COUPLER (STAGGER LOCATIONS)

(12) INCLUDES ONE 2'-1" LAP SPLICE

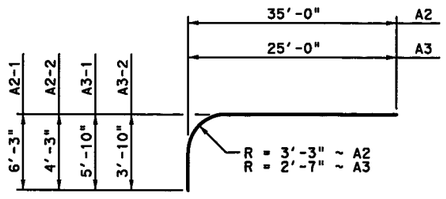

BARS A2 & A3

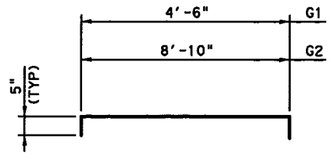

BARS G

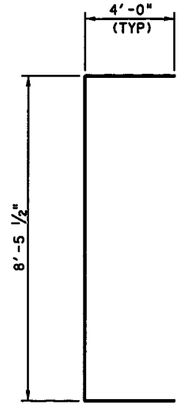

BARS C

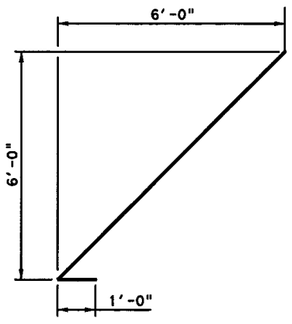

BARS F

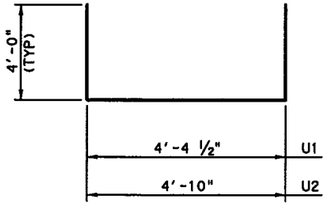

BARS U

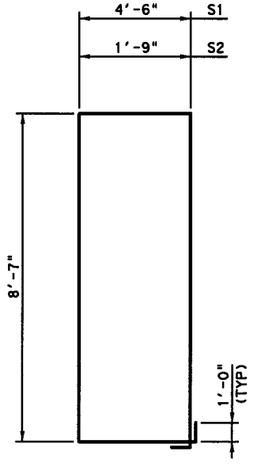

BARS S

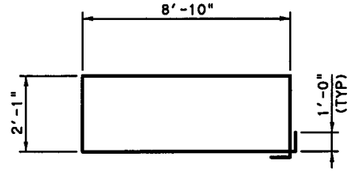

BARS M

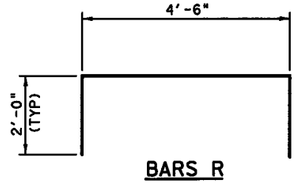

BARS R

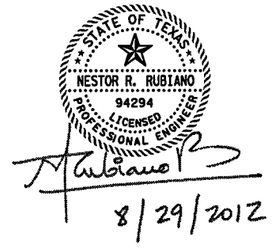

HL 93 LOADING

P.E. Structural Consultants, Inc.
www.PEStructural.com
TBPE Firm No. F-1475

Texas Department of Transportation
© 2012

IH 35W FROM NORTH TARRANT PKWY TO IH 820

INTERIOR BENT NO. 5

NB IH 35W ML TO WB US 287

SCALE: NTS — SHEET 3 OF 3

DESIGN	FED.RD. DIV.NO.	FEDERAL AID PROJECT NO.		HIGHWAY NO.
AEB	6	(SEE TITLE SHEET)		IH 35W
GRAPHICS TLS	STATE	DISTRICT	COUNTY	SHEET NO.
CHECK NRR	TEXAS	FTW	TARRANT	1453
CHECK AB	CONTROL	SECTION	JOB	
	0014	16	255, ETC.	

FILENAME: S38BR*MLN-287W*IB*12.dgn
DRAWING DATE: 7/13/2012

TABLE OF ESTIMATED QUANTITIES ①

BENT	COLUMN HEIGHT "H"	BAR H (#4) 15'-2"		BAR V 22 - #11		TOTAL ESTIMATED QUANTITIES ②	
						TOTAL REINFORCING STEEL	CL C CONC (HPC) (COLUMN)
NO.	(FT)	NO.	WEIGHT (LB)	LENGTH	WEIGHT (LB)	WEIGHT (LB)	(CY)
2	14	30	304	19' - 3"	2,250	2,554	12.4
6	19	40	405	24' - 3"	2,834	3,239	16.9
7	17	36	365	22' - 3"	2,601	2,966	15.1
8	10	22	223	15' - 3"	1,783	2,006	8.9

① ADJUST BARS V LENGTH BY 1 FT AND NUMBER OF BARS H BY 2 FOR EACH LINEAR FOOT OF VARIATION IN "H" VALUE.

② ADJUST REINFORCING STEEL TOTAL BY 137 LBS AND CLASS "C" CONCRETE TOTAL BY 0.889 CY FOR EACH LINEAR FOOT OF VARIATION IN "H" VALUE.

GENERAL NOTES:

1. DESIGNED ACCORDING TO AASHTO LRFD BRIDGE DESIGN SPECIFICATIONS, 5TH EDITION (2010).
2. CLASS "C"(HPC) CONCRETE STRENGTH F'C = 3,600 PSI.
3. ALL REINFORCING SHALL BE GRADE 60.

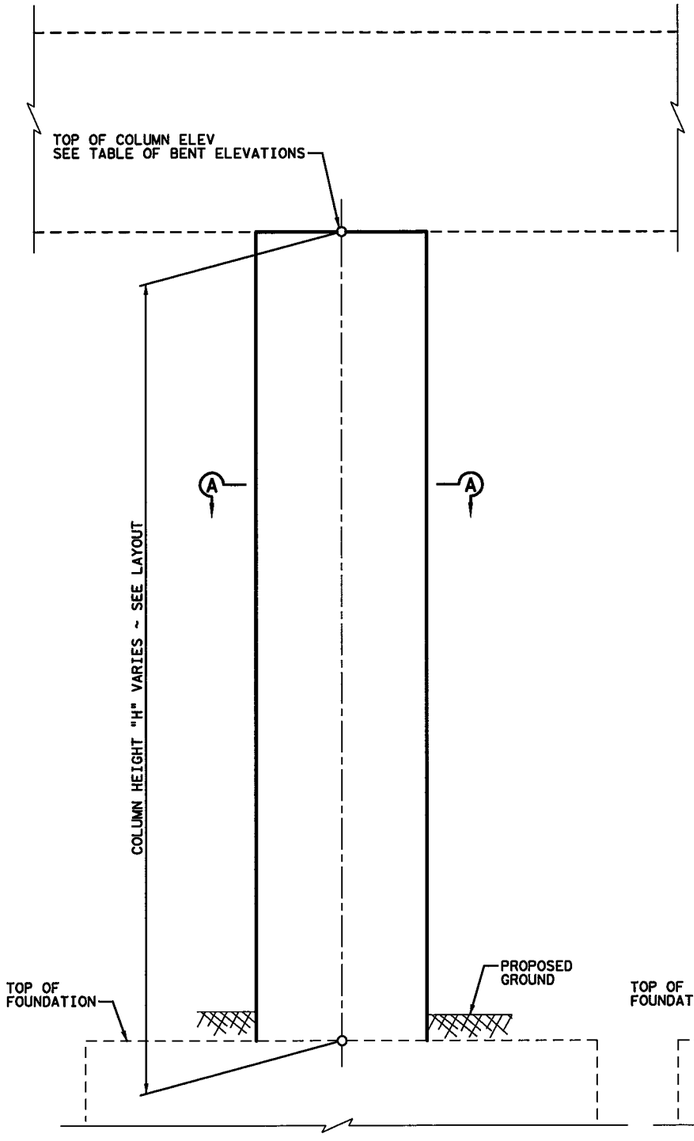

COLUMN GEOMETRY

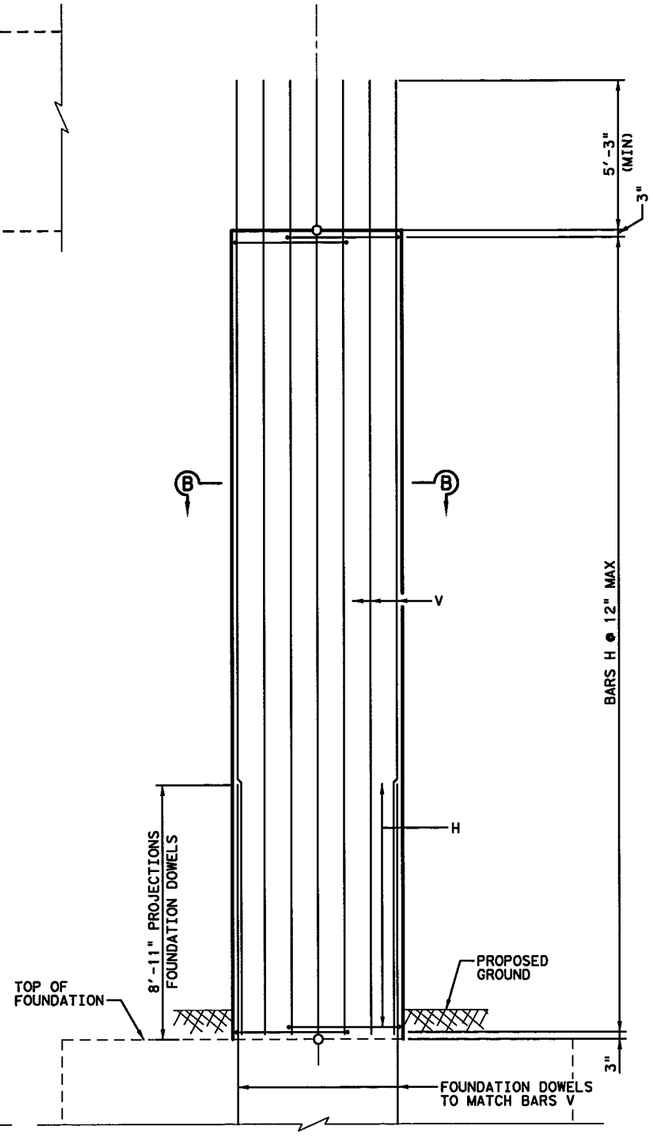

COLUMN REINFORCEMENT DETAILS

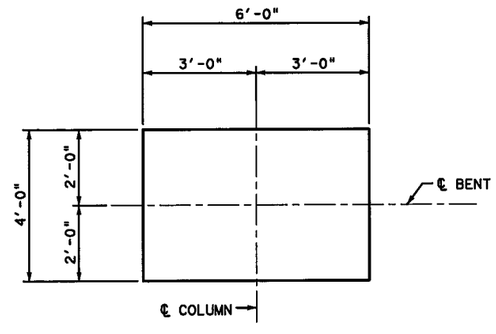

SECTION A-A

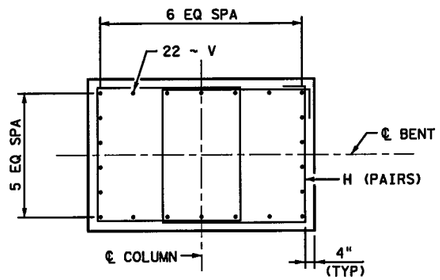

SECTION B-B

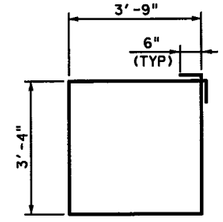

BARS H

STATE OF TEXAS
NESTOR R. RUBIANO
94294
LICENSED
PROFESSIONAL ENGINEER
8/29/2012

HL 93 LOADING

PESC
P.E. Structural Consultants, Inc.
www.PEStructural.com
TBPE Firm No. F-1475

Texas Department of Transportation
© 2012

IH 35W FROM NORTH TARRANT PKWY TO IH 820

COLUMN DETAILS TYPE A

NB IH 35W ML TO WB US 287

SCALE: NTS — SHEET 1 OF 1

DESIGN	FED.RD. DIV.NO.	FEDERAL AID PROJECT NO.		HIGHWAY NO.
AEB	6	(SEE TITLE SHEET)		IH 35W
GRAPHICS TLS	STATE	DISTRICT	COUNTY	SHEET NO.
CHECK NRR	TEXAS	FTW	TARRANT	1454
CHECK AB	CONTROL	SECTION	JOB	
	0014	16	255, ETC.	

FILENAME: S3BBR*MLN-287W*CO*01.dgn

DRAWING DATE: 7/13/2012

TABLE OF ESTIMATED QUANTITIES ①						TOTAL ESTIMATED QUANTITIES ②	
BENT	COLUMN HEIGHT "H"	BAR H (#4) 14'-10"		BAR V 34 - #11		TOTAL REINFORCING STEEL	CL C CONC (HPC) (COLUMN)
NO.	(FT)	NO.	WEIGHT (LB)	LENGTH	WEIGHT (LB)	WEIGHT (LB)	(CY)
3	19	40	396	24' - 3"	4,381	4,777	16.9

① ADJUST BARS V LENGTH BY 1 FT AND NUMBER OF BARS H BY 2 FOR EACH LINEAR FOOT OF VARIATION IN "H" VALUE.

② ADJUST REINFORCING STEEL TOTAL BY 201 LBS AND CLASS "C" CONCRETE TOTAL BY 0.889 CY FOR EACH LINEAR FOOT OF VARIATION IN "H" VALUE.

GENERAL NOTES:

1. DESIGNED ACCORDING TO AASHTO LRFD BRIDGE DESIGN SPECIFICATIONS, 5TH EDITION (2010).
2. CLASS "C" (HPC) CONCRETE STRENGTH F'C = 3,600 PSI.
3. ALL REINFORCING SHALL BE GRADE 60.

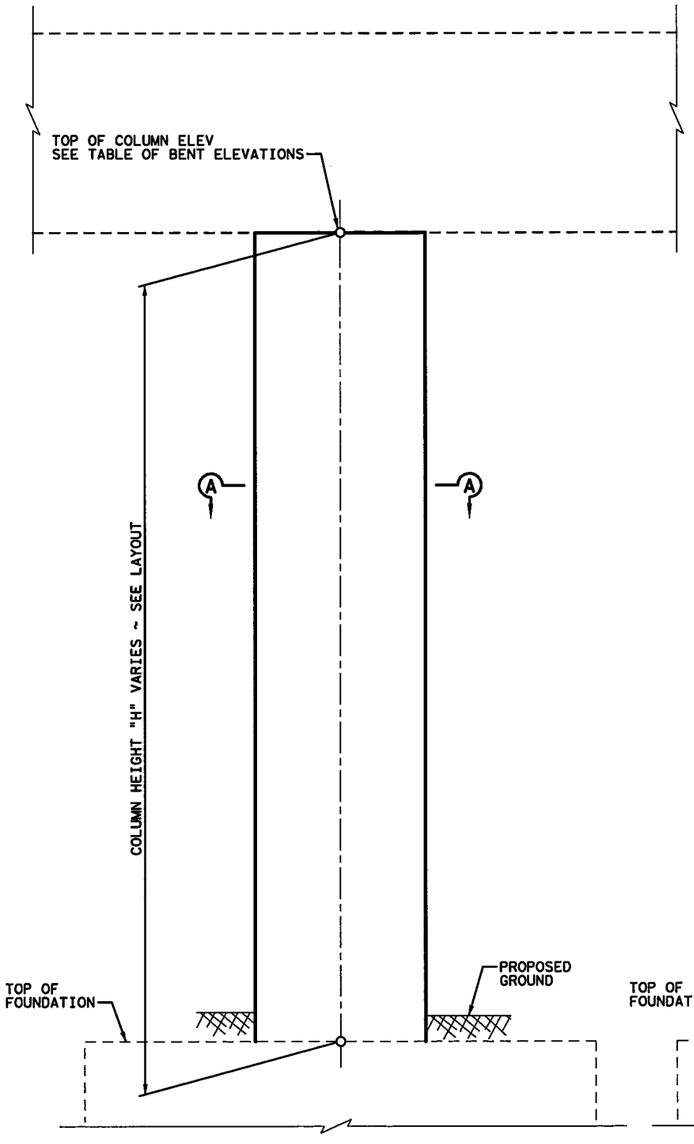

COLUMN GEOMETRY

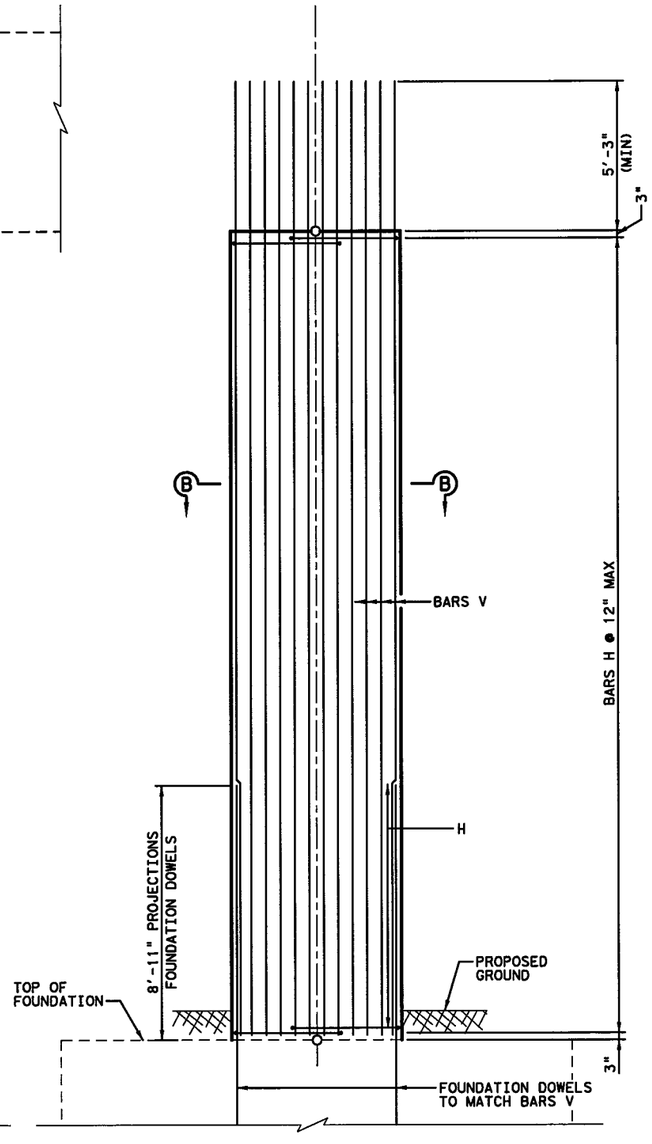

COLUMN REINFORCEMENT DETAILS

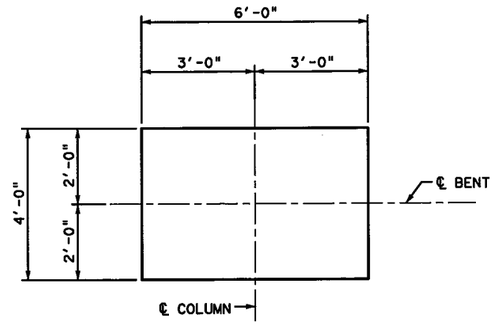

SECTION A-A

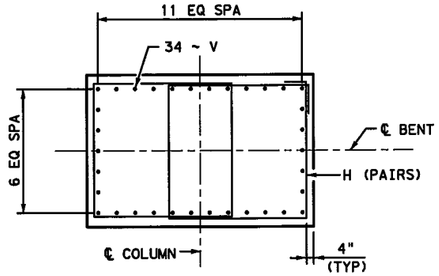

SECTION B-B

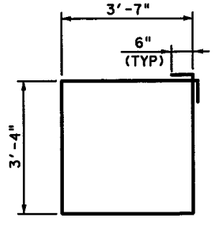

BARS H

STATE OF TEXAS
NESTOR R. RUBIANO
94294
LICENSED PROFESSIONAL ENGINEER
8/29/2012

HL 93 LOADING

PESC P.E. Structural Consultants, Inc.
www.PEStructural.com
TBPE Firm No. F-1475

Texas Department of Transportation
© 2012

IH 35W FROM NORTH TARRANT PKWY TO IH 820

COLUMN DETAILS TYPE B

NB IH 35W ML TO WB US 287

SCALE: NTS SHEET 1 OF 1

DESIGN	FED. RD. DIV. NO.	FEDERAL AID PROJECT NO.		HIGHWAY NO.
AEB	6	(SEE TITLE SHEET)		IH 35W
GRAPHICS TLS	STATE	DISTRICT	COUNTY	SHEET NO.
CHECK NRR	TEXAS	FTW	TARRANT	1455
CHECK AB	CONTROL	SECTION	JOB	
	0014	16	255, ETC.	

FILENAME: S38BR*MLN-287W*CO*02.dgn

DRAWING DATE: 7/13/2012

TABLE OF ESTIMATED QUANTITIES ①						TOTAL ESTIMATED QUANTITIES ②	
BENT	COLUMN HEIGHT "H"	BAR H (#4) 18'-0"		BAR V 54 - #11		TOTAL REINFORCING STEEL	CL C CONC (MASS) (HPC) (COLUMN)
NO.	(FT)	NO.	WEIGHT (LB)	LENGTH	WEIGHT (LB)	WEIGHT (LB)	(CY)
4	17	36	433	22' - 3"	6,384	6,817	20.1

① ADJUST BARS V LENGTH BY 1 FT AND NUMBER OF BARS H BY 2 FOR EACH LINEAR FOOT OF VARIATION IN "H" VALUE.

② ADJUST REINFORCING STEEL TOTAL BY 311 LBS AND CLASS "C" CONCRETE TOTAL BY 1.185 CY FOR EACH LINEAR FOOT OF VARIATION IN "H" VALUE.

GENERAL NOTES:

1. DESIGNED ACCORDING TO AASHTO LRFD BRIDGE DESIGN SPECIFICATIONS, 5TH EDITION (2010).
2. CLASS "C"(HPC) CONCRETE STRENGTH F'C = 3,600 PSI.
3. ALL REINFORCING SHALL BE GRADE 60.

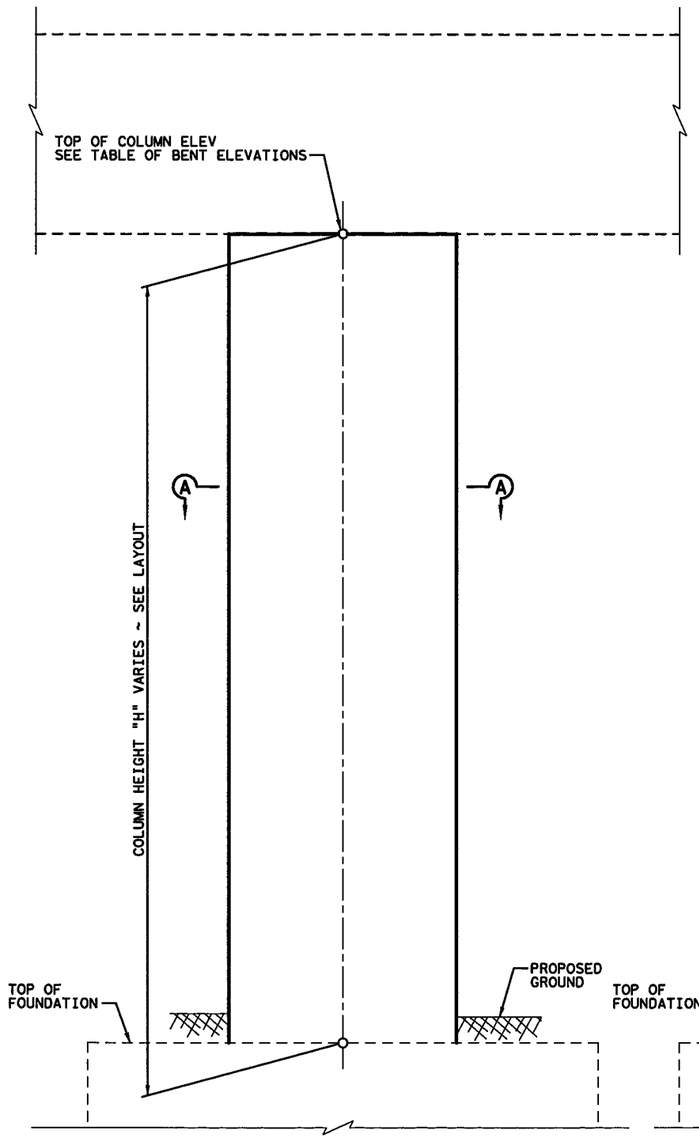

COLUMN GEOMETRY

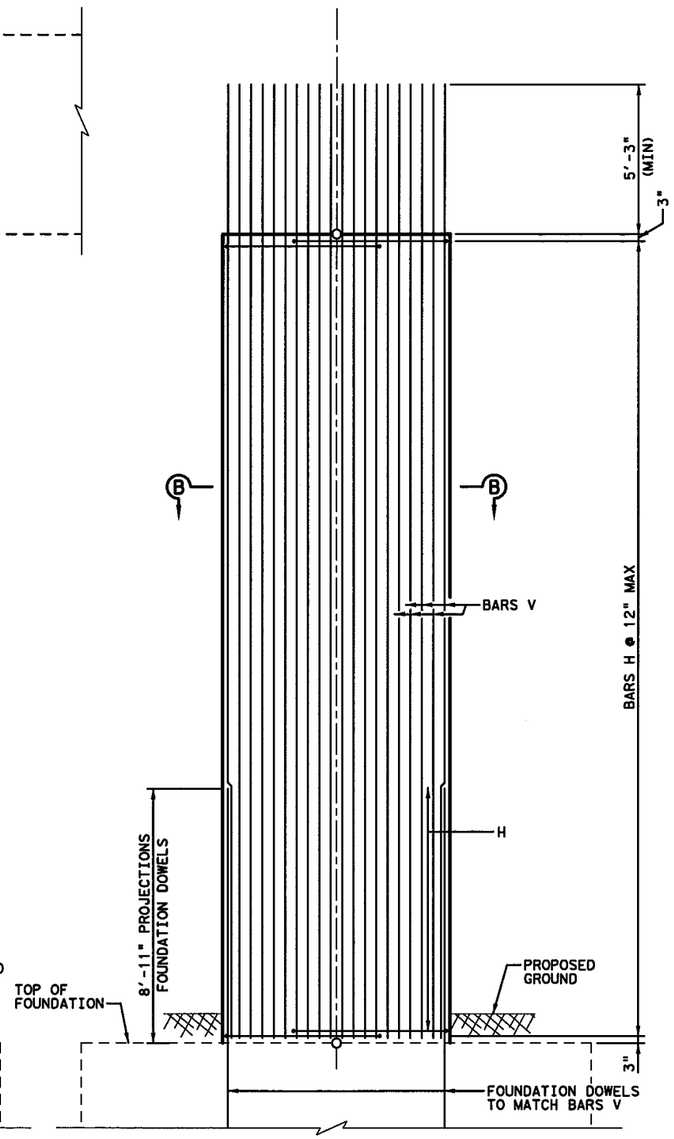

COLUMN REINFORCEMENT DETAILS

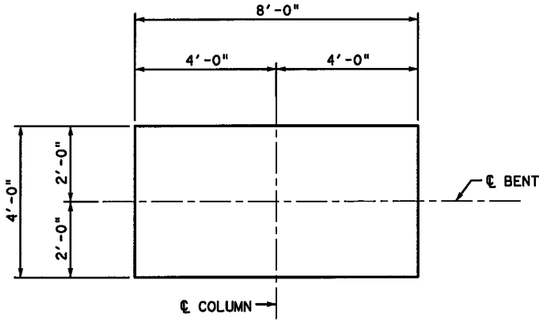

SECTION A-A

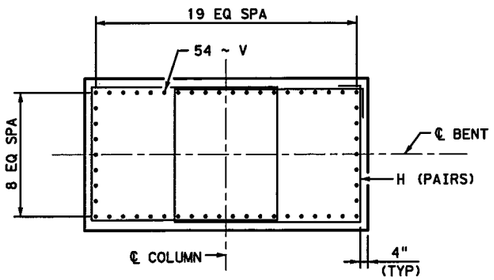

SECTION B-B

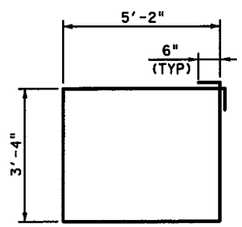

BARS H

STATE OF TEXAS
NESTOR R. RUBIANO
94294
LICENSED
PROFESSIONAL ENGINEER
8/29/2012

HL 93 LOADING

PESC
P.E. Structural Consultants, Inc.
www.PEStructural.com
TBPE Firm No. F-1475

Texas Department of Transportation
© 2012

IH 35W FROM NORTH TARRANT PKWY TO IH 820

COLUMN DETAILS TYPE C

NB IH 35W ML TO WB US 287

SCALE: NTS — SHEET 1 OF 1

DESIGN	FED. RD. DIV. NO.	FEDERAL AID PROJECT NO.		HIGHWAY NO.
AEB	6	(SEE TITLE SHEET)		IH 35W
GRAPHICS TLS	STATE	DISTRICT	COUNTY	SHEET NO.
CHECK NRR	TEXAS	FTW	TARRANT	1456
CHECK AB	CONTROL	SECTION	JOB	
	0014	16	255, ETC.	

FILENAME: S3BBR*MLN-287W*CO*03.dgn

DRAWING DATE: 7/13/2012

TABLE OF ESTIMATED QUANTITIES ④

BENT	COLUMN HEIGHT "H"	BAR H1 (#5) 23'-11"		BAR H2 (#5) 8'-4"		BAR H3 (#5) 5'-2"		BAR V1 22 - #14		BAR V2 24 - #14		BAR V3 5 - #14	
NO.	(FT)	NO.	WEIGHT (LB)	NO.	WEIGHT (LB)	NO.	WEIGHT (LB)	LENGTH	WEIGHT (LB)	LENGTH	WEIGHT (LB)	LENGTH	WEIGHT (LB)
5L	26	52	1,297	104	904	156	841	26' - 0"	4,376	31' - 1"	5,707	29' - 1"	1,112
5R	22	44	1,098	88	765	132	711	22' - 0"	3,703	27' - 1"	4,973	25' - 1"	959

TOTAL ESTIMATED QUANTITIES ⑤

TOTAL REINFORCING STEEL	CL F CONC (MASS) (HPC) (COLUMN)
WEIGHT (LB)	(CY)
14,237	37.9
12,209	32.1

④ ADJUST BARS V LENGTH BY 1 FT, NUMBER OF BARS H1 BY 1, NUMBER OF BARS H2 BY 2 AND NUMBER OF BARS H3 BY 3 FOR EACH LINEAR FOOT OF VARIATION IN "H" VALUE.

⑤ ADJUST REINFORCING STEEL TOTAL BY 489 LBS AND CLASS "F" CONCRETE TOTAL BY 1.457 CY FOR EACH LINEAR FOOT OF VARIATION IN "H" VALUE.

GENERAL NOTES:

1. DESIGNED ACCORDING TO AASHTO LRFD BRIDGE DESIGN SPECIFICATIONS, 5TH EDITION (2010).
2. CLASS "F"(HPC) CONCRETE STRENGTH F'C = 5,000 PSI.
3. ALL REINFORCING SHALL BE GRADE 60.

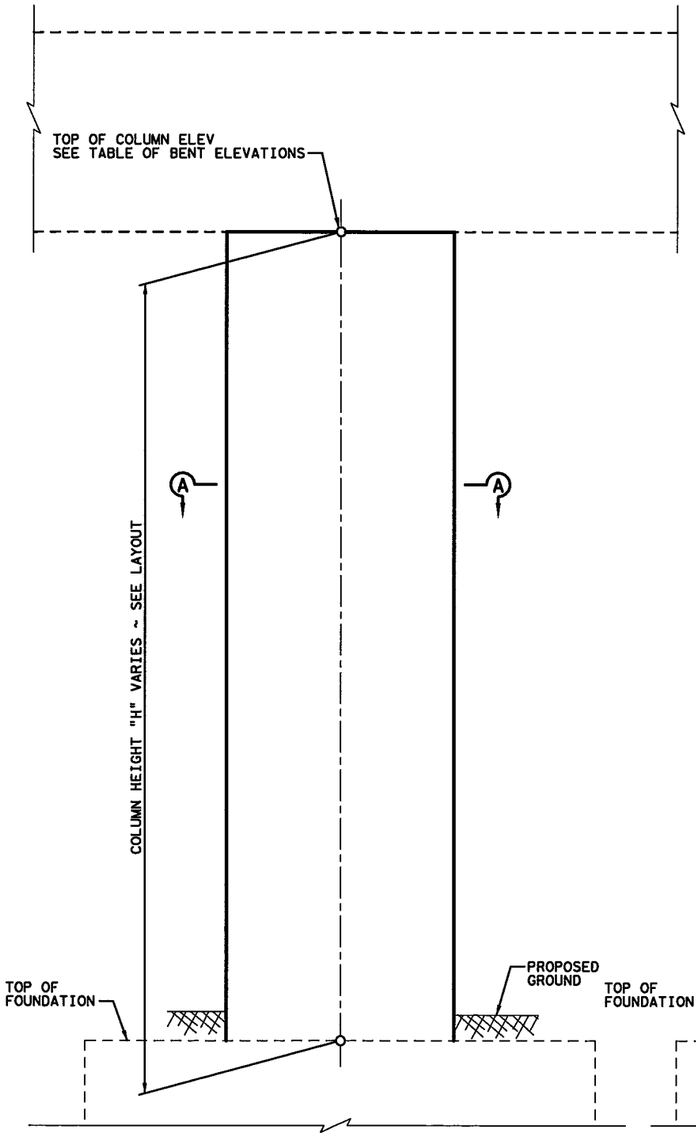

COLUMN GEOMETRY

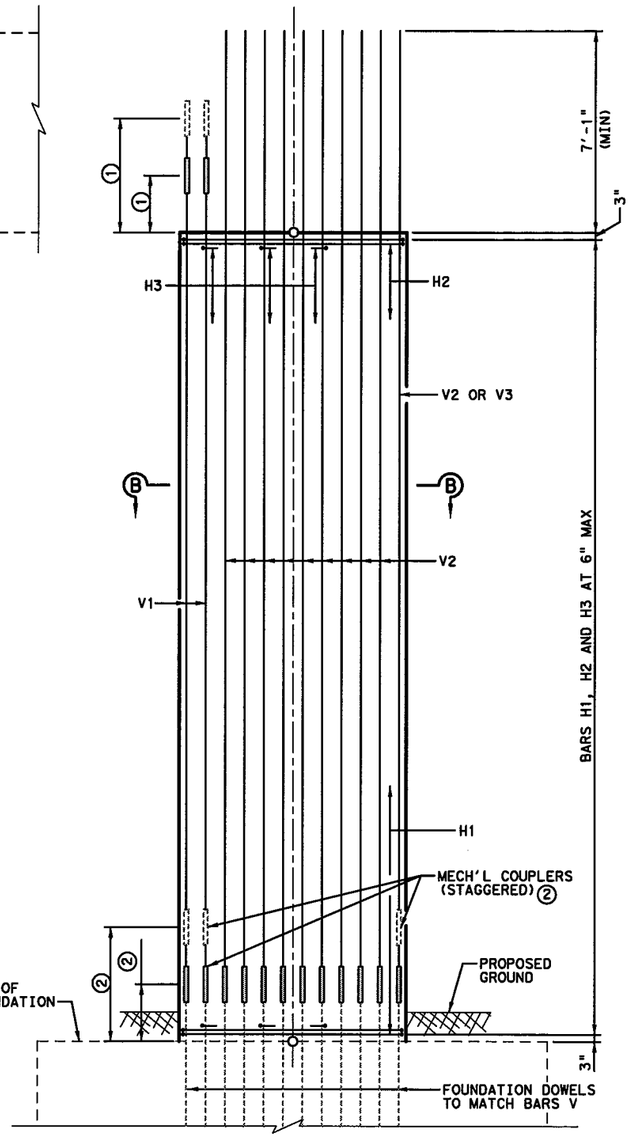

COLUMN REINFORCEMENT DETAILS

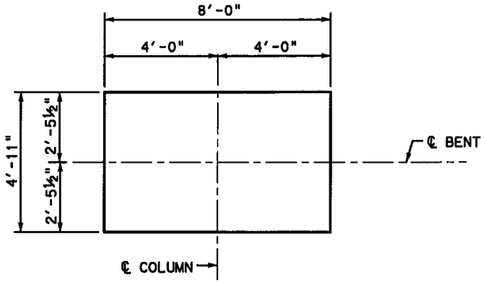

SECTION A-A

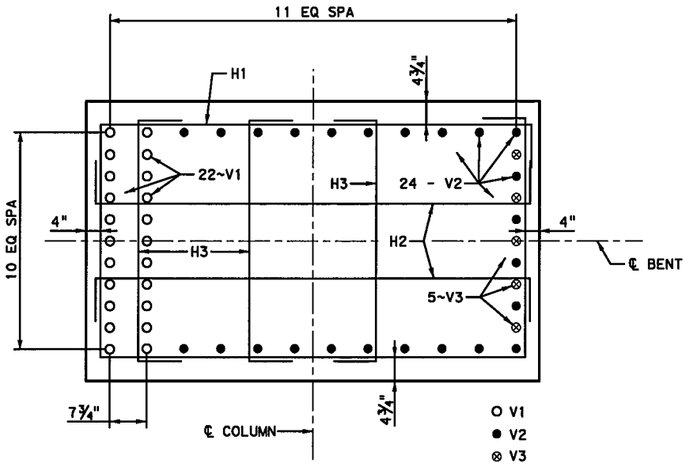

SECTION B-B

(LEFT COLUMN SHOWN, RIGHT COLUMN IS MIRRORED IMAGE)

① SEE INTERIOR BENT NO. 5 SHEETS FOR PROJECTION LENGTH

② SEE FOOTING TYPE D FOR PROJECTION LENGTH

③ ADJUST SIZE OF STIRRUP AS REQUIRED AT MECHANICAL COUPLERS

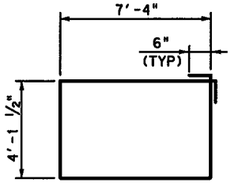

BARS H1 ③

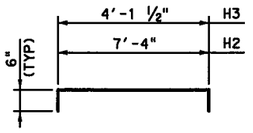

BARS H2 & H3

HL 93 LOADING

PESC P.E. Structural Consultants, Inc.
www.PEStructural.com
TBPE Firm No. F-1475

Texas Department of Transportation
© 2012

IH 35W FROM NORTH TARRANT PKWY TO IH 820

COLUMN DETAILS TYPE D

NB IH 35W ML TO WB US 287

SCALE: NTS — SHEET 1 OF 1

DESIGN	FED.RD. DIV.NO.	FEDERAL AID PROJECT NO.		HIGHWAY NO.
AEB	6	(SEE TITLE SHEET)		IH 35W
GRAPHICS TLS	STATE	DISTRICT	COUNTY	SHEET NO.
CHECK NRR	TEXAS	FTW	TARRANT	1457
CHECK AB	CONTROL	SECTION	JOB	
	0014	16	255, ETC.	

FILENAME: S3BBR*ML N-287W*CO*04.dgn

DRAWING DATE: 7/13/2012

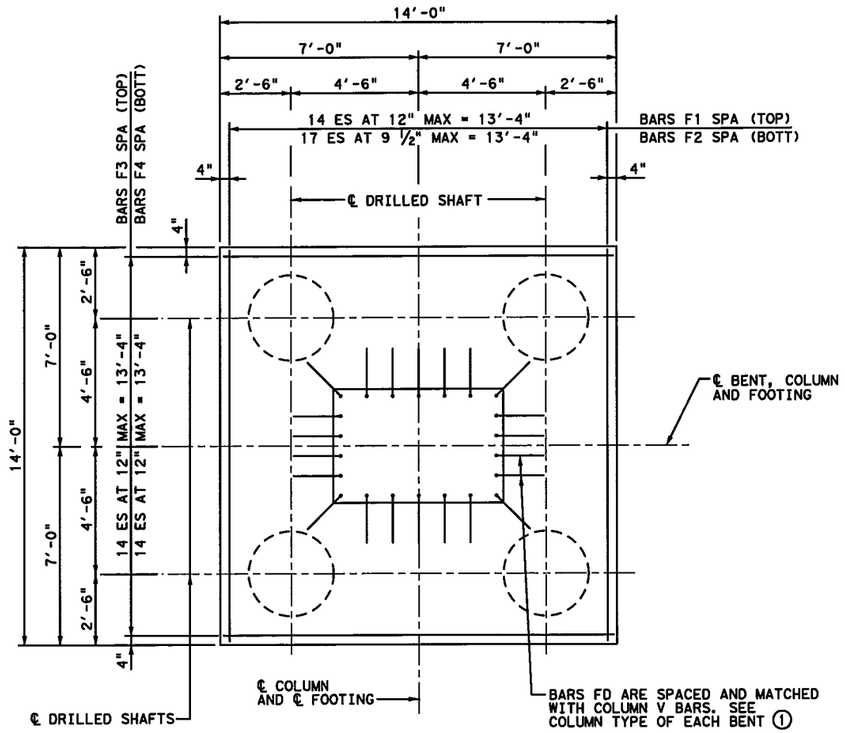

PLAN

① LOCATION OF THE VERTICAL LEGS OF BARS FD SHALL MATCH THE COLUMN BARS V AS DETAILED IN SECTION B-B OF THE COLUMN DETAILS SHEET. AT BOTTOM OF COLUMN, PLACE COLUMN BARS V INSIDE BARS FD AS REQUIRED TO ENSURE 3" MINIMUM CLEAR SPACING BETWEEN LAP SPLICES. AT THE TOP END OF THE LAP SPLICES, BEND COLUMN BARS V OUTWARD AT A SLOPE OF 6 V : 1 H TO BRING COLUMN BARS BACK TO THEIR NORMAL POSITION AS DETAILED IN SECTION B-B OF THE COLUMN DETAILS SHEET.

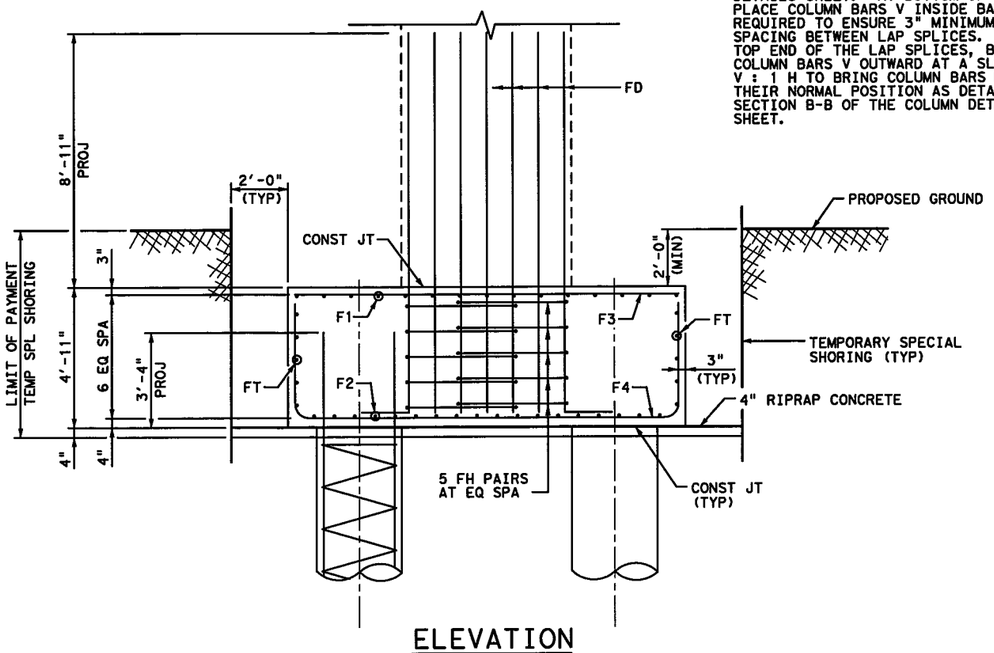

ELEVATION

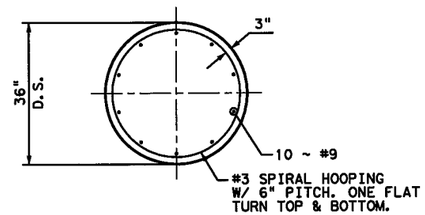

TYPICAL DRILLED SHAFT SECTION

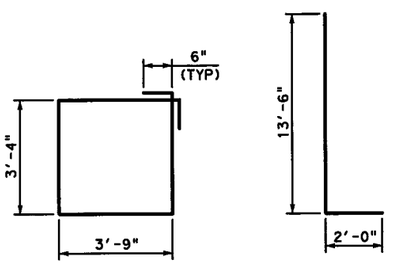

BARS FH BARS FD

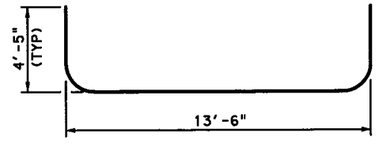

BARS F2 & F4

TABLE OF ESTIMATED QUANTITIES
(PER FOOTING)

BAR	NO.	SIZE	LENGTH	WEIGHT
F1	15	#11	13'-8"	1,089
F2	18	#11	22'-4"	2,136
F3	15	#11	13'-8"	1,089
F4	15	#11	22'-4"	1,780
FD	22	#11	15'-6"	1,812
FH	10	#5	15'-2"	158
FT	20	#7	13'-8"	559

REINFORCING STEEL	LB	8,623
CL C CONC (FOOTING) (MASS)	CY	35.7
RIPRAP (CONC) (4 IN)	CY	3.7
TEMPORARY SPL SHORING	SF	521.7

GENERAL NOTES:

1. DESIGNED ACCORDING TO AASHTO LRFD BRIDGE DESIGN SPECIFICATIONS, 5TH EDITION (2010).
2. CLASS "C" CONCRETE STRENGTH F'C = 3,600 PSI.
3. FOOTING AND DRILLED SHAFT REINFORCING BARS SHALL BE GRADE 60.

STATE OF TEXAS
NESTOR R. RUBIANO
94294
LICENSED
PROFESSIONAL ENGINEER
8/29/2012

HL 93 LOADING

PESC P.E. Structural Consultants, Inc.
www.PEStructural.com
TBPE Firm No. F-1475

Texas Department of Transportation
© 2012

IH 35W FROM NORTH TARRANT PKWY TO IH 820

FOOTING DETAILS TYPE A
NB IH 35W ML TO WB US 287

SCALE: NTS SHEET 1 OF 1

DESIGN	FED.RD. DIV.NO.	FEDERAL AID PROJECT NO.		HIGHWAY NO.
AEB	6	(SEE TITLE SHEET)		IH 35W
GRAPHICS TLS	STATE	DISTRICT	COUNTY	SHEET NO.
CHECK NRR	TEXAS	FTW	TARRANT	1458
CHECK AB	CONTROL	SECTION	JOB	
	0014	16	255, ETC.	

DRAWING DATE: 7/13/2012 FILENAME: S3BBR*MLN-287W*FT*01.dgn

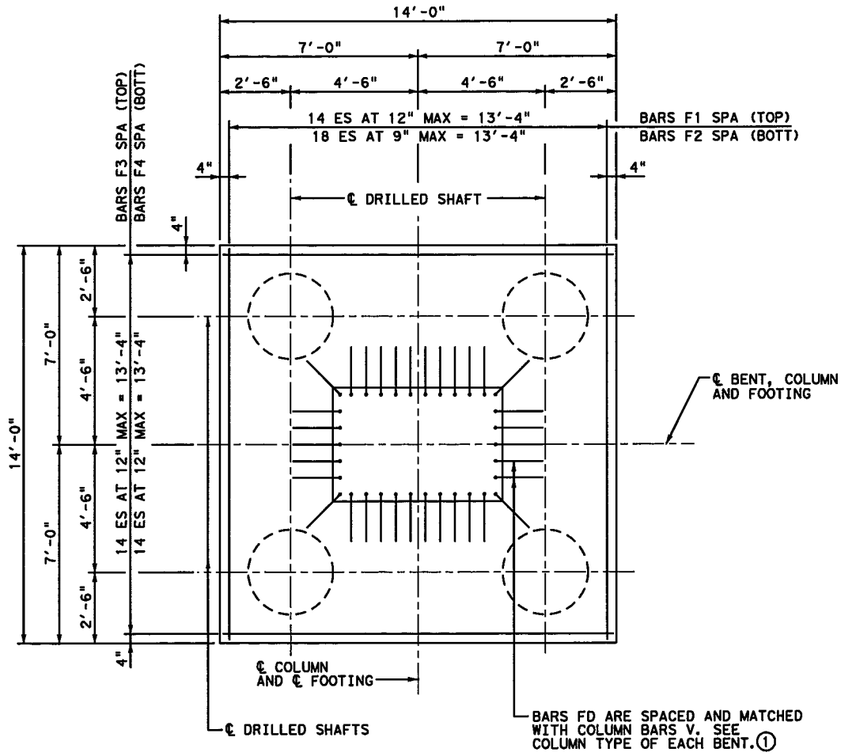

PLAN

① LOCATION OF THE VERTICAL LEGS OF BARS FD SHALL MATCH THE COLUMN BARS V AS DETAILED IN SECTION B-B OF THE COLUMN DETAILS SHEET. AT BOTTOM OF COLUMN, PLACE COLUMN BARS V INSIDE BARS FD AS REQUIRED TO ENSURE 3" MINIMUM CLEAR SPACING BETWEEN LAP SPLICES. AT THE TOP END OF THE LAP SPLICES, BEND COLUMN BARS V OUTWARD AT A SLOPE OF 6 V : 1 H TO BRING COLUMN BARS BACK TO THEIR NORMAL POSITION AS DETAILED IN SECTION B-B OF THE COLUMN DETAILS SHEET.

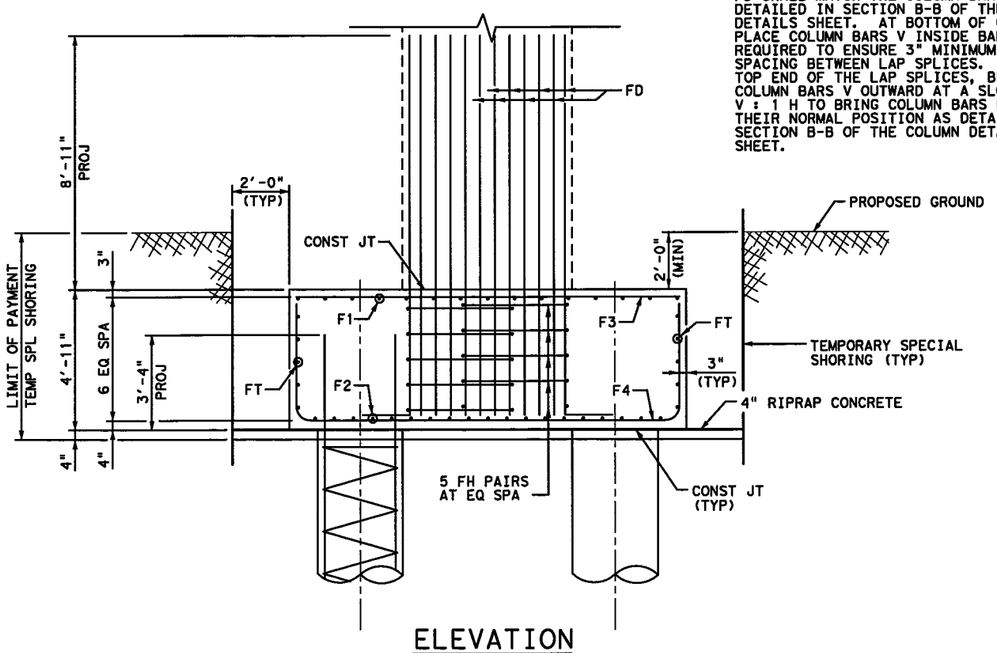

ELEVATION

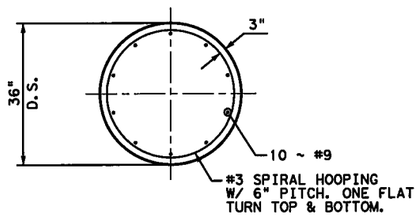

TYPICAL DRILLED SHAFT SECTION

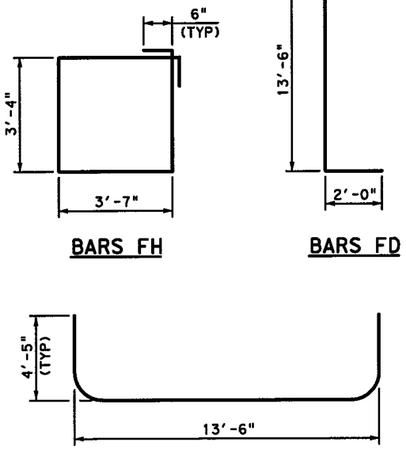

TABLE OF ESTIMATED QUANTITIES
(PER FOOTING)

BAR	NO.	SIZE	LENGTH	WEIGHT
F1	15	#11	13'-8"	1,089
F2	19	#11	22'-4"	2,254
F3	15	#11	13'-8"	1,089
F4	15	#11	22'-4"	1,780
FD	34	#11	15'-6"	2,800
FH	10	#5	14'-10"	155
FT	20	#7	13'-8"	559

REINFORCING STEEL	LB	9,726
CL C CONC (FOOTING) (MASS)	CY	35.7
RIPRAP (CONC) (4 IN)	CY	3.7
TEMPORARY SPL SHORING	SF	521.7

GENERAL NOTES:

1. DESIGNED ACCORDING TO AASHTO LRFD BRIDGE DESIGN SPECIFICATIONS, 5TH EDITION (2010).
2. CLASS "C" CONCRETE STRENGTH F'C = 3,600 PSI.
3. FOOTING AND DRILLED SHAFT REINFORCING BARS SHALL BE GRADE 60.

STATE OF TEXAS
NESTOR R. RUBIANO
94294
LICENSED
PROFESSIONAL ENGINEER
8/29/2012

HL 93 LOADING

PESC P.E. Structural Consultants, Inc.
www.PEStructural.com
TBPE Firm No. F-1475

Texas Department of Transportation
© 2012

IH 35W FROM NORTH TARRANT PKWY TO IH 820

FOOTING DETAILS TYPE B

NB IH 35W ML TO WB US 287

SCALE: NTS — SHEET 1 OF 1

DESIGN	FED.RD. DIV.NO.	FEDERAL AID PROJECT NO.		HIGHWAY NO.
AEB	6	(SEE TITLE SHEET)		IH 35W
GRAPHICS TLS	STATE	DISTRICT	COUNTY	SHEET NO.
CHECK NRR	TEXAS	FTW	TARRANT	1459
CHECK AB	CONTROL	SECTION	JOB	
	0014	16	255, ETC.	

FILENAME: S3BBR*MLN-287W*FT*02.dgn
DRAWING DATE: 7/13/2012

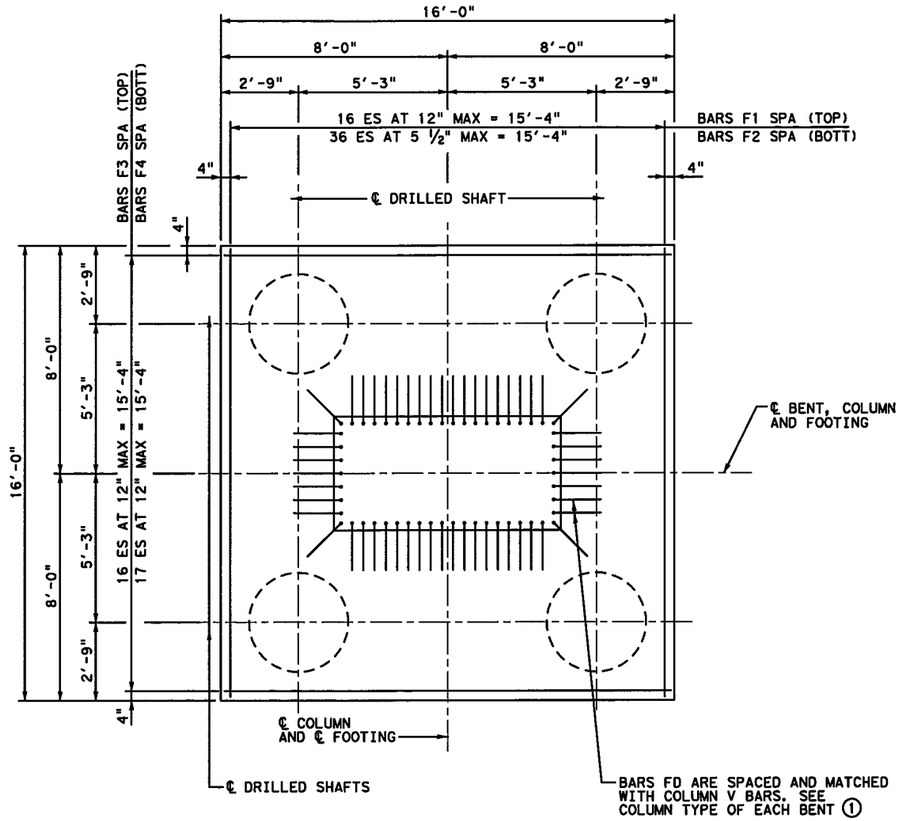

PLAN

① LOCATION OF THE VERTICAL LEGS OF BARS FD SHALL MATCH THE COLUMN BARS V AS DETAILED IN SECTION B-B OF THE COLUMN DETAILS SHEET. AT BOTTOM OF COLUMN, PLACE COLUMN BARS V INSIDE BARS FD AS REQUIRED TO ENSURE 3" MINIMUM CLEAR SPACING BETWEEN LAP SPLICES. AT THE TOP END OF THE LAP SPLICES, BEND COLUMN BARS V OUTWARD AT A SLOPE OF 6 V : 1 H TO BRING COLUMN BARS BACK TO THEIR NORMAL POSITION AS DETAILED IN SECTION B-B OF THE COLUMN DETAILS SHEET.

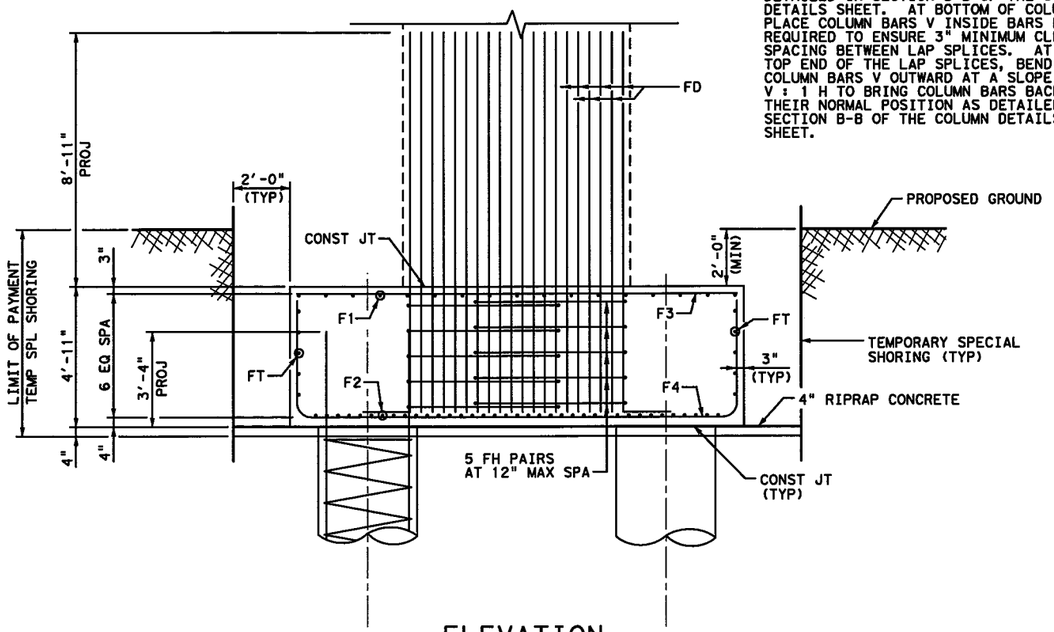

ELEVATION

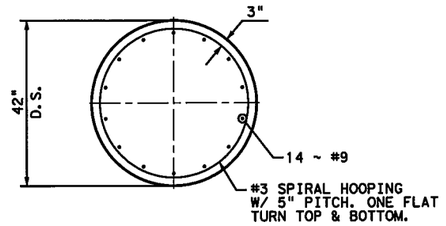

TYPICAL DRILLED SHAFT SECTION

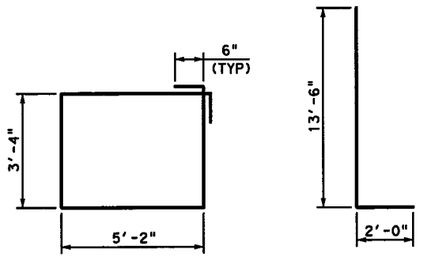

TABLE OF ESTIMATED QUANTITIES
(PER FOOTING)

BAR	NO.	SIZE	LENGTH	WEIGHT
F1	17	#11	15'-8"	1,415
F2	37	#11	24'-4"	4,783
F3	17	#11	15'-8"	1,415
F4	18	#11	24'-4"	2,327
FD	54	#11	15'-6"	4,447
FH	10	#5	18'-0"	188
FT	20	#7	15'-8"	640

REINFORCING STEEL	LB	15,215
CL C CONC (FOOTING) (MASS)	CY	46.6
RIPRAP (CONC) (4 IN)	CY	4.5
TEMPORARY SPL SHORING	SF	579.6

GENERAL NOTES:

1. DESIGNED ACCORDING TO AASHTO LRFD BRIDGE DESIGN SPECIFICATIONS, 5TH EDITION (2010).
2. CLASS "C" CONCRETE STRENGTH F'C = 3,600 PSI.
3. FOOTING AND DRILLED SHAFT REINFORCING BARS SHALL BE GRADE 60.

HL 93 LOADING

PESC P.E. Structural Consultants, Inc.
www.PEStructural.com
TBPE Firm No. F-1475

Texas Department of Transportation

© 2012

IH 35W FROM NORTH TARRANT PKWY TO IH 820

FOOTING DETAILS TYPE C

NB IH 35W ML TO WB US 287

SCALE: NTS

SHEET 1 OF 1

DESIGN	FED. RD. DIV. NO.	FEDERAL AID PROJECT NO.		HIGHWAY NO.
AEB	6	(SEE TITLE SHEET)		IH 35W
GRAPHICS TLS	STATE	DISTRICT	COUNTY	SHEET NO.
CHECK NRR	TEXAS	FTW	TARRANT	1460
CHECK AB	CONTROL 0014	SECTION 16	JOB 255, ETC.	

DRAWING DATE: 7/13/2012 FILENAME: S3BBR#MLN-287W#FT#03.dgn

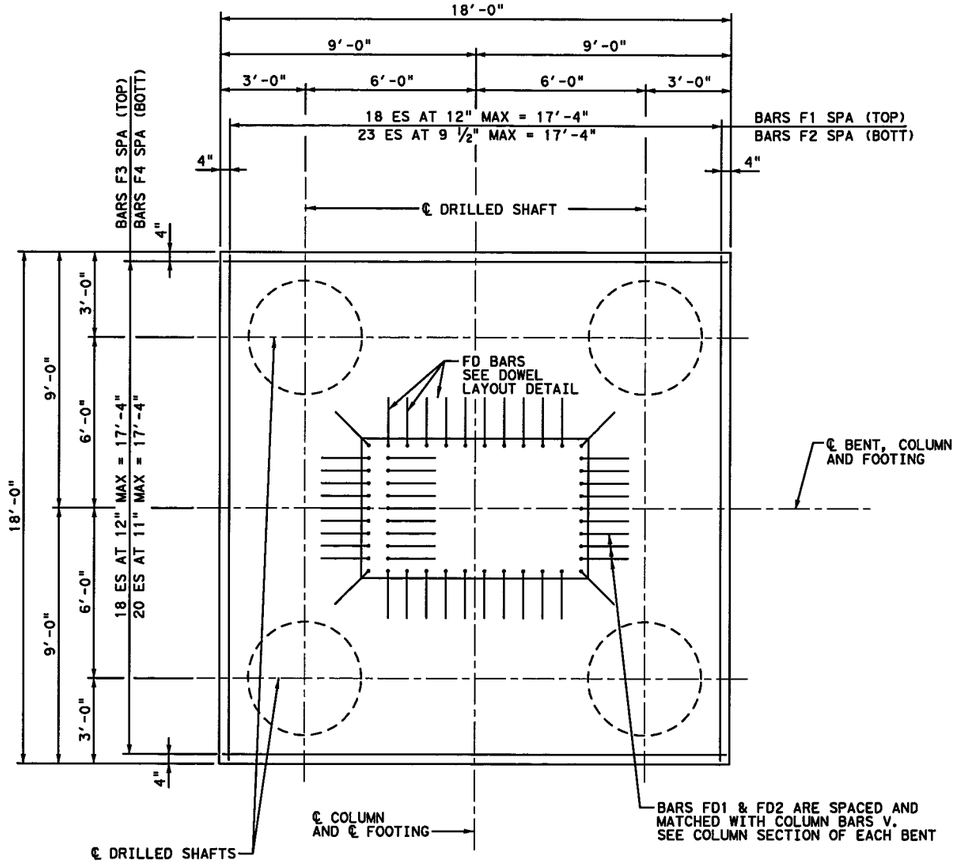

PLAN

(LEFT FOOTING SHOWN, RIGHT FOOTING IS MIRRORED IMAGE)

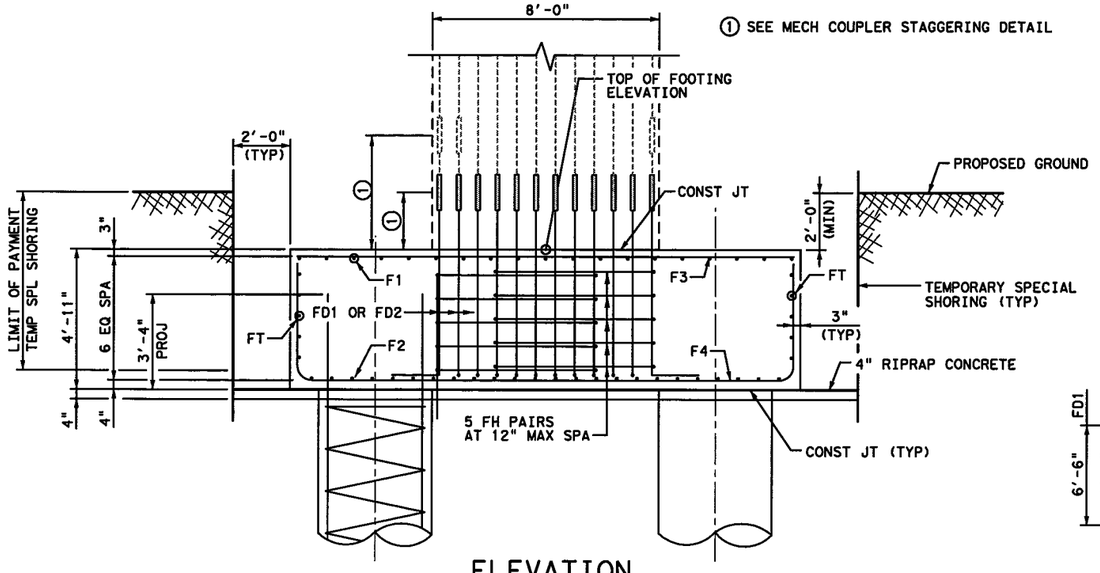

ELEVATION

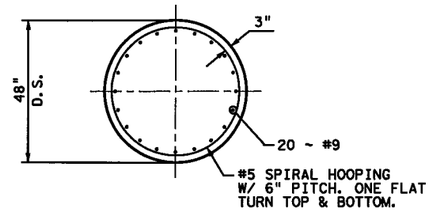

TYPICAL DRILLED SHAFT SECTION

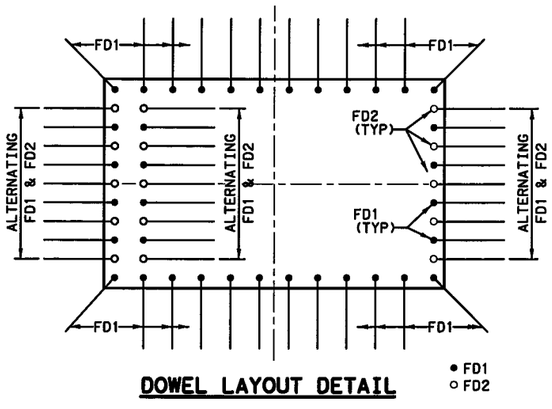

DOWEL LAYOUT DETAIL

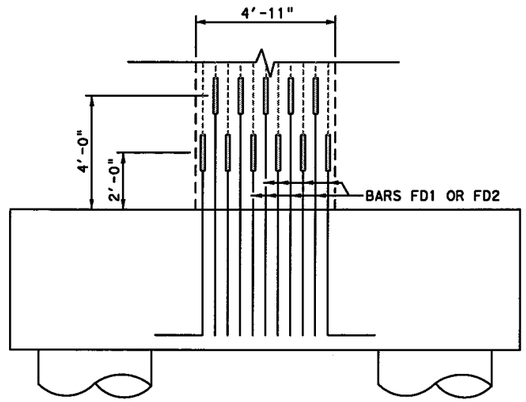

MECH COUPLER STAGGERING DETAIL

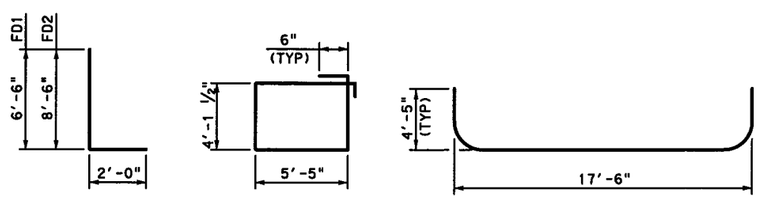

TABLE OF ESTIMATED QUANTITIES

(PER FOOTING)

BAR	NO.	SIZE	LENGTH	WEIGHT
F1	19	#11	17'-8"	1,783
F2	24	#11	26'-4"	3,358
F3	19	#11	17'-8"	1,783
F4	21	#11	26'-4"	2,938
FD1	36	#11	8'-6"	1,626
FD2	15	#11	10'-6"	837
FH	10	#5	20'-1"	209
FT	20	#7	17'-8"	722

REINFORCING STEEL	LB	13,256
CL C CONC (FOOTING) (MASS)	CY	59.0
RIPRAP (CONC) (4 IN)	CY	5.4
TEMPORARY SPL SHORING	SF	637.5

GENERAL NOTES:

1. DESIGNED ACCORDING TO AASHTO LRFD BRIDGE DESIGN SPECIFICATIONS, 5TH EDITION (2010).
2. CLASS "C" CONCRETE STRENGTH F'C = 3,600 PSI.
3. FOOTING AND DRILLED SHAFT REINFORCING BARS SHALL BE GRADE 60.

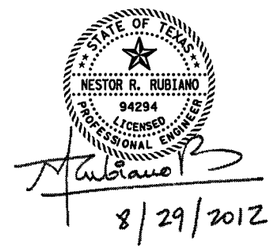

HL 93 LOADING

P.E. Structural Consultants, Inc.
www.PEStructural.com
TBPE Firm No. F-1475

Texas Department of Transportation
© 2012

IH 35W FROM NORTH TARRANT PKWY TO IH 820

FOOTING DETAILS TYPE D

NB IH 35W ML TO WB US 287

SCALE: NTS — SHEET 1 OF 1

DESIGN	FED. RD. DIV. NO.	FEDERAL AID PROJECT NO.		HIGHWAY NO.
AEB	6	(SEE TITLE SHEET)		IH 35W
GRAPHICS TLS	STATE	DISTRICT	COUNTY	SHEET NO.
CHECK NRR	TEXAS	FTW	TARRANT	1461
CHECK AB	CONTROL	SECTION	JOB	
	0014	16	255, ETC.	

FILENAME: S3BBR*MLN-287W*FT*04.dgn

DRAWING DATE: 7/13/2012

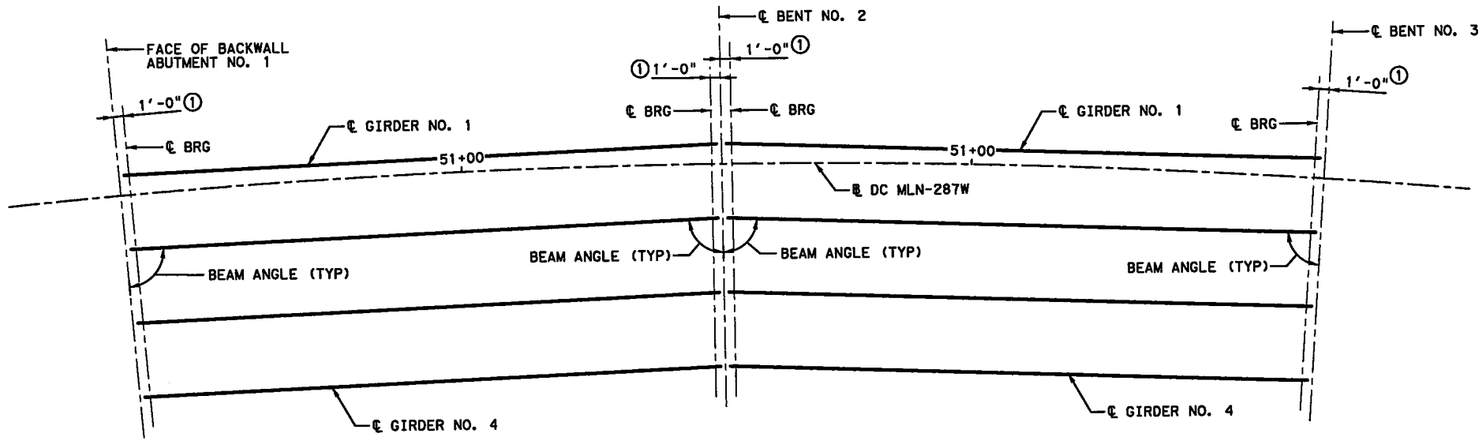

SPAN 1
(TX54 GIRDERS)

SPAN 2
(TX54 GIRDERS)

① SEE IGEB STANDARD FOR ORIENTATION OF DIMENSION.

② GIRDER LENGTHS SHOWN ARE BOTTOM GIRDER FLANGE LENGTHS WITH ADJUSTMENTS MADE FOR BEAM SLOPE.

BENT REPORT

ABUT NO. 1 (S 48 58 58.97 W)
DISTANCE BETWEEN STATION LINE AND BEAM 1 2.000 L

			BEAM SPAC. (C.L. BENT)	BEAM ANGLE D M S
SPAN 1	BEAM	1	0.000	87 47 0
	BEAM	2	7.250	87 47 0
	BEAM	3	7.250	87 47 0
	BEAM	4	7.250	87 47 0
	TOTAL		21.750	

BENT NO. 2 (S 53 24 59.13 W)
DISTANCE BETWEEN STATION LINE AND BEAM 1 2.000 L

			BEAM SPAC. (C.L. BENT)	BEAM ANGLE D M S
SPAN 1	BEAM	1	0.000	87 56 0
	BEAM	2	7.250	87 56 0
	BEAM	3	7.250	87 56 0
	BEAM	4	7.250	87 56 0
	TOTAL		21.750	

BENT NO. 2 (S 53 24 59.13 W)
DISTANCE BETWEEN STATION LINE AND BEAM 1 2.000 L

			BEAM SPAC. (C.L. BENT)	BEAM ANGLE D M S
SPAN 2	BEAM	1	0.000	87 47 0
	BEAM	2	7.250	87 44 33
	BEAM	3	7.250	87 42 6
	BEAM	4	7.250	87 39 37
	TOTAL		21.750	

BENT NO. 3 (S 57 50 59.29 W)
DISTANCE BETWEEN STATION LINE AND BEAM 1 2.000 L

			BEAM SPAC. (C.L. BENT)	BEAM ANGLE D M S
SPAN 2	BEAM	1	0.000	87 56 0
	BEAM	2	7.333	87 49 26
	BEAM	3	7.333	87 51 53
	BEAM	4	7.333	87 54 22
	TOTAL		22.000	

BEAM REPORT

BEAM REPORT, SPAN 1

		HORIZONTAL DISTANCE C-C BENT	C-C BRG.	TRUE DISTANCE BOT. BM. FLG. ②	BEAM SLOPE
BEAM	1	118.125	116.125	117.64	0.0131
BEAM	2	117.564	115.564	117.07	0.0132
BEAM	3	117.004	115.003	116.51	0.0132
BEAM	4	116.443	114.442	115.95	0.0133

BEAM REPORT, SPAN 2

		HORIZONTAL DISTANCE C-C BENT	C-C BRG.	TRUE DISTANCE BOT. BM. FLG. ②	BEAM SLOPE
BEAM	1	118.125	116.125	117.64	0.0174
BEAM	2	117.561	115.561	117.08	0.0175
BEAM	3	116.997	114.997	116.52	0.0175
BEAM	4	116.433	114.433	115.95	0.0176

HL 93 LOADING

PESC P.E. Structural Consultants, Inc.
www.PEStructural.com
TBPE Firm No. F-1475
TBPE REGISTRATION NO. F-926

Texas Department of Transportation
© 2012

IH 35W FROM NORTH TARRANT PKWY TO IH 820

GIRDER LAYOUT (SPANS 1-2)

NB IH 35W ML TO WB US 287

SCALE: NTS SHEET 1 OF 1

DESIGN	FED.RD. DIV.NO.	FEDERAL AID PROJECT NO.		HIGHWAY NO.
AEB	6	(SEE TITLE SHEET)		IH 35W
GRAPHICS TLS	STATE	DISTRICT	COUNTY	SHEET NO.
CHECK NRR	TEXAS	FTW	TARRANT	1462
CHECK AB	CONTROL	SECTION	JOB	
	0014	16	255, ETC.	

FILENAME: S3BBR*ML.N-287W*GF*01.dgn
DRAWING DATE: 7/13/2012

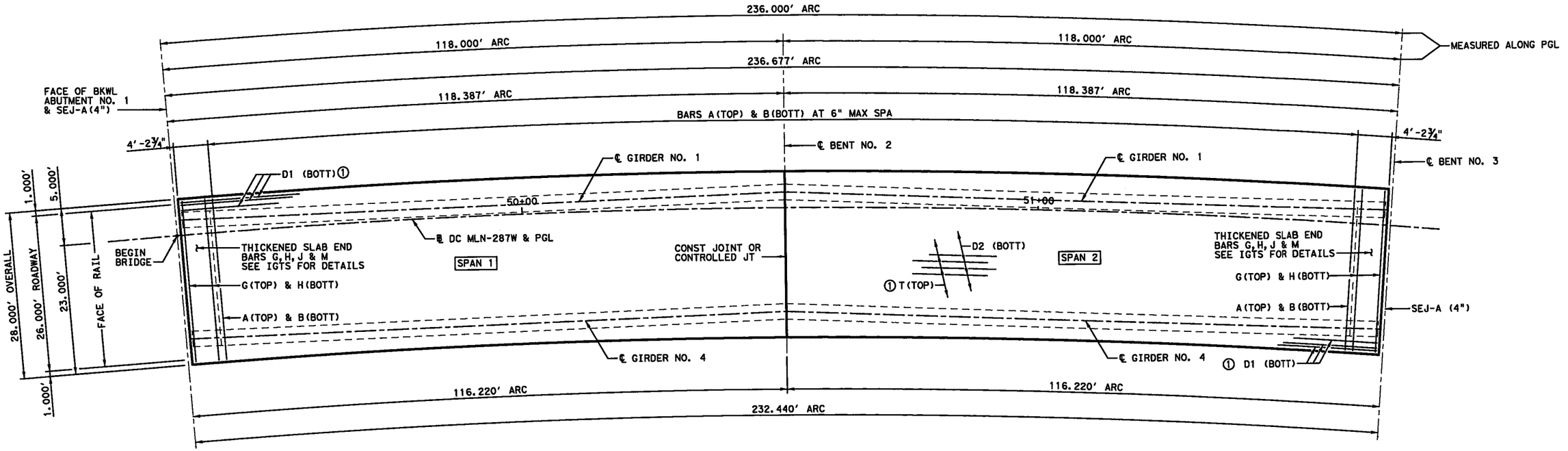

PLAN

① 2" END COVER ON BARS D1 AND T.

HL 93 LOADING

P.E. Structural Consultants, Inc.
www.PEStructural.com
TBPE Firm No. F-1475

Texas Department of Transportation

© 2012

IH 35W FROM NORTH TARRANT PKWY TO IH 820

236.00' PRESTRESSED CONCRETE I-GIRDER UNIT

NB IH 35W ML TO WB US 287

SCALE: NTS

DESIGN	FED.RD. DIV.NO.	FEDERAL AID PROJECT NO.		HIGHWAY NO.
AEB	6	(SEE TITLE SHEET)		IH 35W
GRAPHICS	STATE	DISTRICT	COUNTY	SHEET NO.
TLS	TEXAS	FTW	TARRANT	
CHECK	CONTROL	SECTION	JOB	1463
NRR	0014	16	255, ETC.	
CHECK				
AB				

DRAWING DATE: 7/13/2012 FILENAME: S3BBR*MLN-287W*PB*01.dgn

SPAN NO.	GIRDER NO.	"A" FT	"B" FT
1	1	0.140	0.200
	2	0.133	0.189
	3	0.130	0.185
	4	0.107	0.152
2	1	0.141	0.200
	2	0.133	0.189
	3	0.131	0.186
	4	0.105	0.150

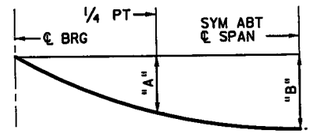

DEAD LOAD DEFLECTION DIAGRAM

CALCULATED DEFLECTIONS SHOWN ARE DUE TO THE CONCRETE SLAB ON INTERIOR GIRDERS ONLY (EC = 5000 KSI). ADJUST VALUES AS REQUIRED FOR EXTERIOR GIRDERS AND IF OPTIONAL SLAB FORMING IS USED. THESE VALUES MAY REQUIRE FIELD VERIFICATION.

TABLE OF SECTION DEPTHS

SPAN NO.	GIRDER NO.	"X" AT ℄ BRG	"Y" AT ℄ BRG	"Z" AT ℄ SPAN
1	1	1'-2 ¾"	5'-8 ¾"	10 ⅜"
	2 & 3	1'-2 ¾"	5'-8 ¾"	10 ⅛"
	4	1'-2 ¾"	5'-8 ¾"	9 ⅞"
2	1	1'-2 ¾"	5'-8 ¾"	10 ¼"
	2 & 3	1'-2 ¾"	5'-8 ¾"	10"
	4	1'-2 ¾"	5'-8 ¾"	9 ⅝"

② THEORETICAL DIMENSION

BAR TABLE

BAR	SIZE
A	#5
B	#5
D	#5
G	#5
H	#5
J	#5
M	#5
T	#4

TABLE OF ESTIMATED QUANTITIES

SPAN	REINF CONC SLAB	PRESTR CONC I-GIRDERS (TX54)	CL S CONC (HPC)	REINFORCING STEEL
NO.	SF	LF	CY	LB
1	3,285	467.17	99.9	21,353
2	3,285	467.19	99.5	21,353
TOTAL	6,570	934.36	199.4	42,706

③ REINFORCING STEEL WEIGHT IS CALCULATED USING AN APPROXIMATE FACTOR OF 6.5 LBS PER SQ FT.

④ LENGTHS SHOWN ARE BOTTOM OF GIRDER FLANGE LENGTHS WITH ADJUSTMENTS MADE FOR BEAM SLOPE. SEE GIRDER LAYOUT FOR GIRDER LENGTHS.

GENERAL NOTES:

1. DESIGNED ACCORDING TO AASHTO LRFD BRIDGE DESIGN SPECIFICATIONS, 5TH EDITION (2010).
2. CLASS "S"(HPC) CONCRETE STRENGTH F'C = 4,000 PSI.
3. ALL REINFORCING SHALL BE GRADE 60 AND EPOXY COATED.
4. SEE PCP OR PMDF STANDARDS FOR DETAILS AND QUANTITY ADJUSTMENTS IF EITHER OF THESE OPTIONS ARE USED.
5. SEE IGTS STANDARD FOR THICKENED SLAB END DETAILS.
6. SEE IGMS STANDARD FOR MISCELLANEOUS SLAB DETAILS.
7. SEE RAIL STANDARD FOR RAIL ANCHORAGE IN SLAB.
8. BAR LAPS, WHERE REQUIRED, TO BE AS FOLLOWS:
   #4 = 2'-1"
   #5 = 2'-7"

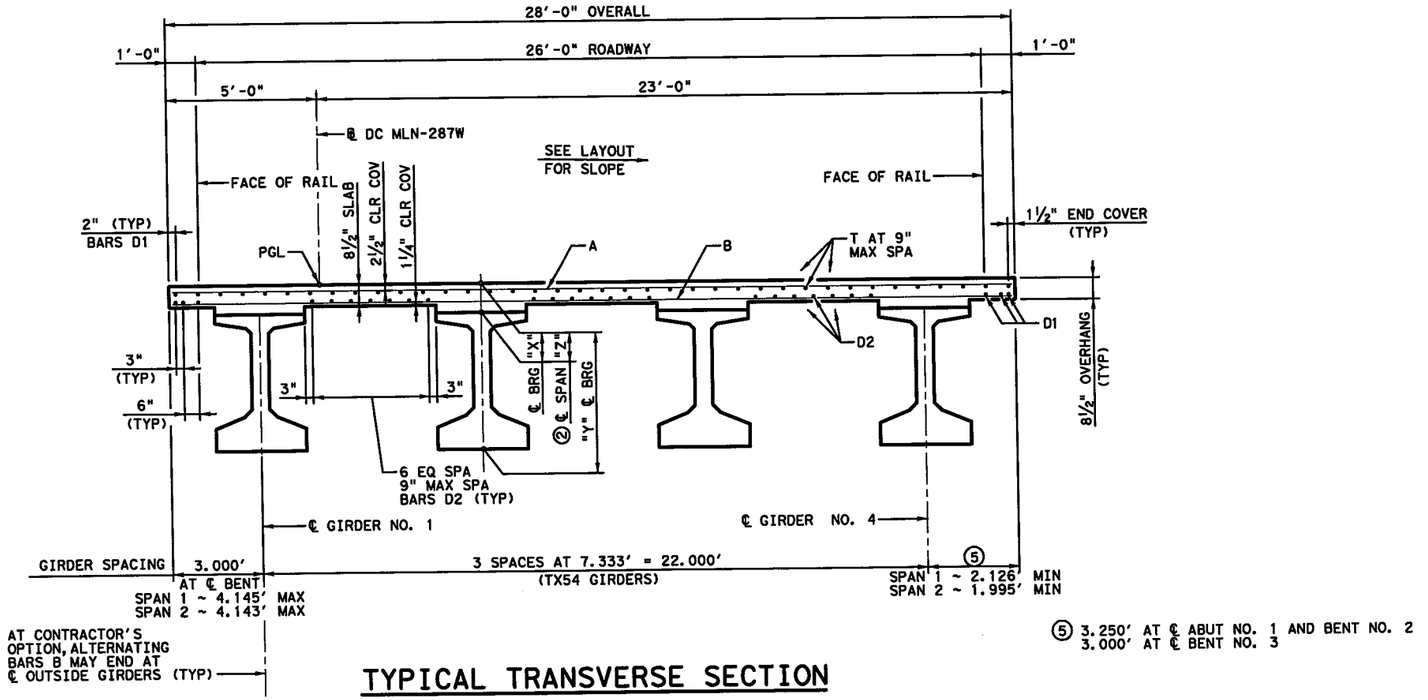

TYPICAL TRANSVERSE SECTION

⑤ 3.250' AT ℄ ABUT NO. 1 AND BENT NO. 2
3.000' AT ℄ BENT NO. 3

STATE OF TEXAS
NESTOR R. RUBIANO
94294
LICENSED
PROFESSIONAL ENGINEER

7/06/2012

HL 93 LOADING

PESC P.E. Structural Consultants, Inc.
www.PEStructural.com
TBPE Firm No. F-1475

Texas Department of Transportation
© 2012

IH 35W FROM NORTH TARRANT PKWY TO IH 820

236.00' PRESTRESSED CONCRETE I-GIRDER UNIT

NB IH 35W ML TO WB US 287

SCALE: NTS — SHEET 2 OF 2

DESIGN	FED.RD. DIV.NO.	FEDERAL AID PROJECT NO.		HIGHWAY NO.
AEB	6	(SEE TITLE SHEET)		IH 35W
GRAPHICS TLS	STATE	DISTRICT	COUNTY	SHEET NO.
CHECK NRR	TEXAS	FTW	TARRANT	1464
CHECK AB	CONTROL	SECTION	JOB	
	0014	16	255, ETC.	

FILENAME: S3BBR#ML N-287W#PB#02.dgn
DRAWING DATE: 7/13/2012

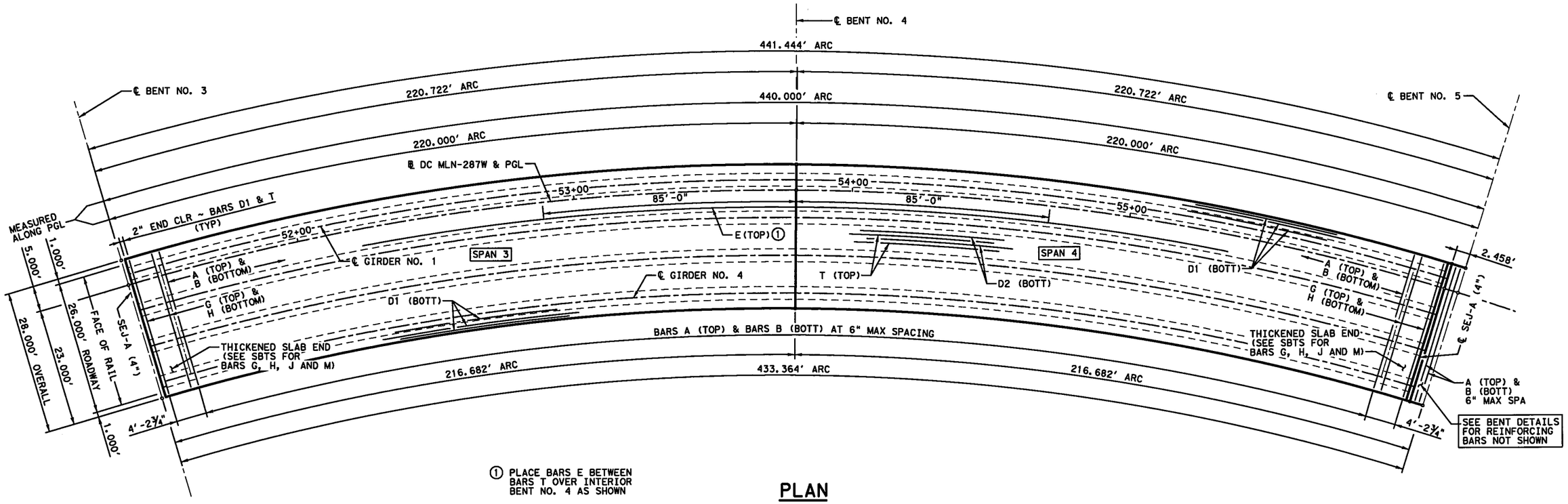

① PLACE BARS E BETWEEN BARS T OVER INTERIOR BENT NO. 4 AS SHOWN

PLAN

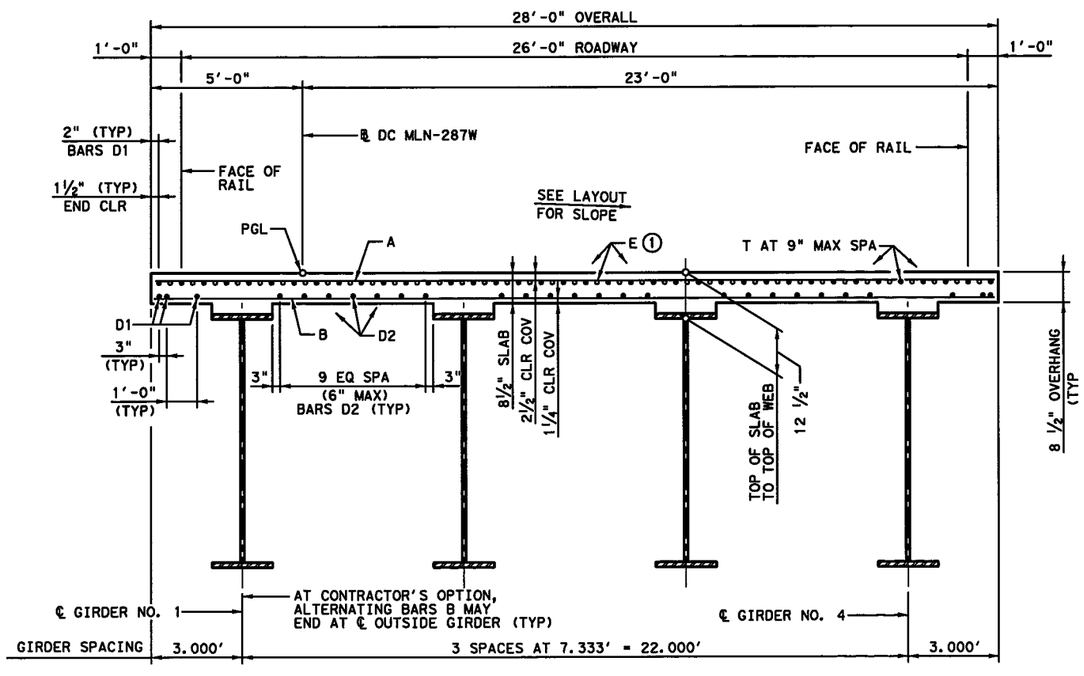

TYPICAL RADIAL SECTION

GENERAL NOTES:

1. DESIGNED ACCORDING TO AASHTO LRFD BRIDGE DESIGN SPECIFICATIONS, 5TH EDITION (2010).
2. CLASS "S" (HPC) CONCRETE STRENGTH F'C = 4,000 PSI.
3. ALL REINFORCING SHALL BE GRADE 60 AND EPOXY COATED.
4. SEE SBTS STANDARD FOR THICKENED SLAB END DETAILS AND QUANTITY ADJUSTMENTS.
5. PRESTRESSED CONCRETE PANELS (PCP) SHALL NOT BE PERMITTED.
6. SEE PMDF STANDARD FOR OPTIONAL STAY IN PLACE FORMING DETAILS.
7. SEE SBMS STANDARD FOR MISCELLANEOUS SLAB DETAILS.
8. SEE SGEB STANDARD FOR BEARING DETAILS.
9. SEE RAIL STANDARD FOR RAIL ANCHORAGE IN SLAB.
10. BAR LAPS, WHERE REQUIRED, TO BE AS FOLLOWS:
    #4 = 2'-1"
    #5 = 2'-7"

STATE OF TEXAS
NESTOR R. RUBIANO
94294
LICENSED
PROFESSIONAL ENGINEER

8/29/2012

HL 93 LOADING

PESC P.E. Structural Consultants, Inc.
www.PEStructural.com
TBPE Firm No. F-1475

Texas Department of Transportation
© 2012

IH 35W FROM NORTH TARRANT PKWY TO IH 820

440.00' CONTINUOUS PLATE GIRDER UNIT

NB IH 35W ML TO WB US 287

SCALE: NTS — SHEET 1 OF 6

DESIGN	FED.RD. DIV.NO.	FEDERAL AID PROJECT NO.		HIGHWAY NO.
AEB	6	(SEE TITLE SHEET)		IH 35W
GRAPHICS TLS	STATE	DISTRICT	COUNTY	SHEET NO.
CHECK NRR	TEXAS	FTW	TARRANT	1465
CHECK AB	CONTROL	SECTION	JOB	
	0014	16	255, ETC.	

FILENAME: S38BR#MLN-287W#SG#01.dgn
DRAWING DATE: 7/13/2012

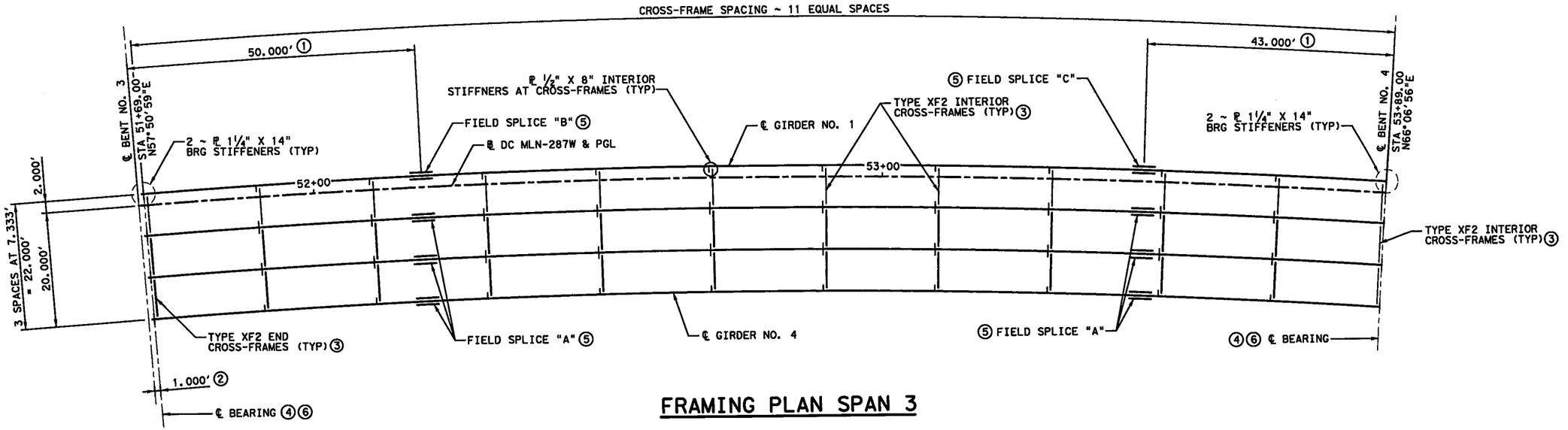

FRAMING PLAN SPAN 3

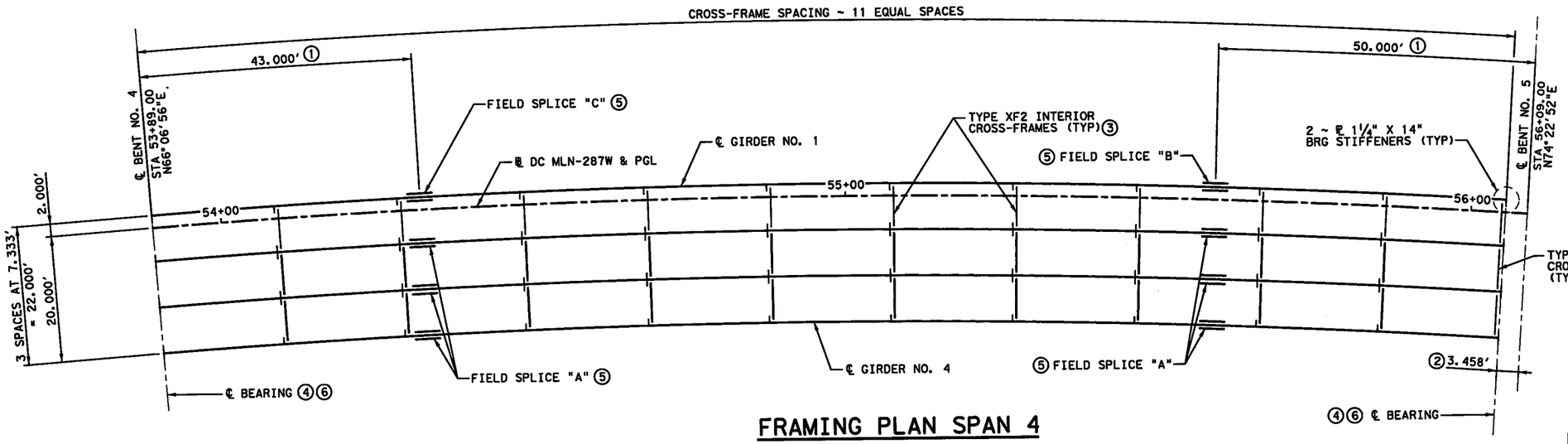

FRAMING PLAN SPAN 4

TABLE OF GIRDER RADII	
GIRDER #1	1527.000'
DC MLN-287W	1525.000'
GIRDER #2	1519.667'
GIRDER #3	1512.333'
GIRDER #4	1505.000'

TABLE OF CROSS-FRAMES MEMBER SIZES ③		
MEMBER	TYPE "XF2" END CROSS-FRAMES	TYPE "XF2" INTERIOR CROSS-FRAMES
TOP CHORD	5" x 5" x ½"	5" x 5" x ½"
BOTTOM CHORD	5" x 5" x ½"	5" x 5" x ½"
DIAGONALS	5" x 5" x ½"	5" x 5" x ½"

① MEASURED ALONG ℄ DC MLN-287W.
② MEASURED PERPENDICULAR TO ℄ BENT.
③ SEE SGMD STANDARDS FOR ADDITIONAL DETAILS.
④ SEE SGEB STANDARD FOR BEARING DETAILS.
⑤ SEE BOLTED FIELD SPLICE DETAILS ON SHEETS 4 AND 5 OF 6.
⑥ SEE GIRDER ELEVATIONS ON SHEET 3 OF 6 FOR BEARING TYPES.

STATE OF TEXAS
NESTOR R. RUBIANO
94294
LICENSED
PROFESSIONAL ENGINEER
7/06/2012

HL 93 LOADING

PESC P.E. Structural Consultants, Inc.
www.PEStructural.com
TBPE Firm No. F-1475

Texas Department of Transportation
© 2012

IH 35W FROM NORTH TARRANT PKWY TO IH 820

440.00' CONTINUOUS PLATE GIRDER UNIT

NB IH 35W ML TO WB US 287

SCALE: NTS — SHEET 2 OF 6

DESIGN	FED. RD. DIV. NO.	FEDERAL AID PROJECT NO.		HIGHWAY NO.
AEB	6	(SEE TITLE SHEET)		IH 35W
GRAPHICS TLS	STATE	DISTRICT	COUNTY	SHEET NO.
CHECK NRR	TEXAS	FTW	TARRANT	1466
CHECK AB	CONTROL	SECTION	JOB	
	0014	16	255, ETC.	

FILENAME: S3BBR#MLN-287W#SG#02.dgn
DRAWING DATE: 7/13/2012

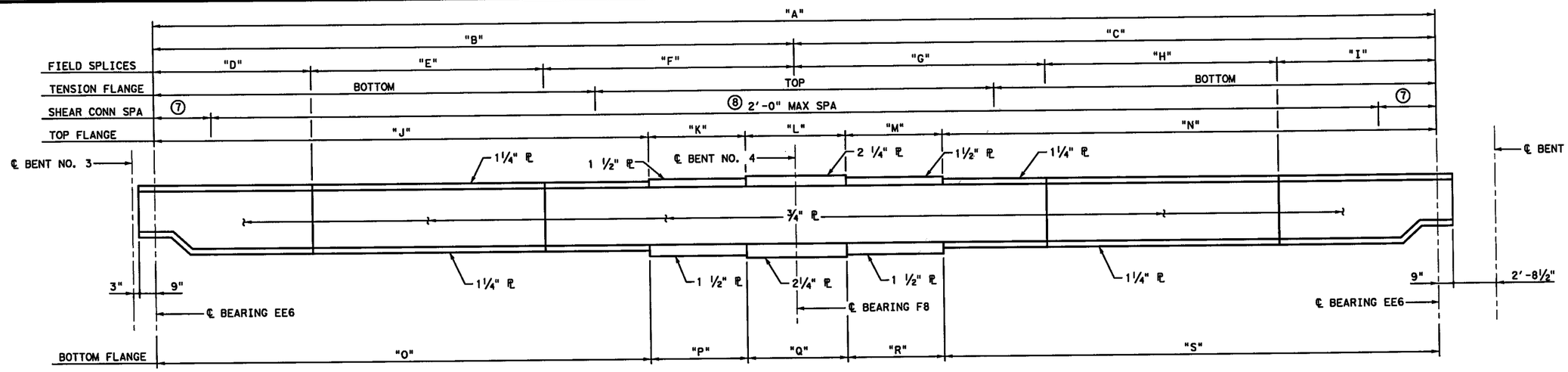

⑦ 4 SPA = 2'-0"

⑧ NOTE OMISSION OF STUDS AT OPTIONAL BOLTED SLICES.

SPAN 3

SPAN 4

ELEVATION ~ GIRDER NO. 1

ALL WEB PLATES ARE 96" DEEP EXCEPT AT DAPPED ENDS. ALL FLANGE PLATES ARE 30" WIDE.

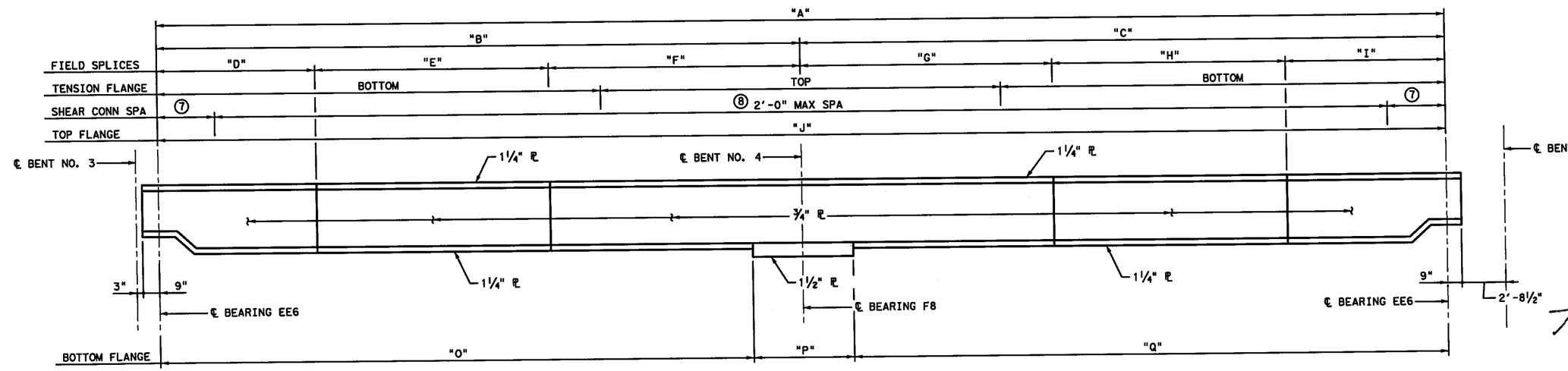

SPAN 3

SPAN 4

ELEVATION ~ GIRDER NO. 2 - 4

TABLE OF GIRDER DIMENSIONS									
GIRDER NO.	"A"	"B"	"C"	"D"	"E"	"F"	"G"	"H"	"I"
1	436.119'	219.289'	216.830'	49.066'	127.167'	43.056'	43.056'	127.167'	46.607'
2	434.003'	218.231'	215.772'	48.825'	126.556'	42.850'	42.850'	126.556'	46.367'
3	431.887'	217.173'	214.714'	48.585'	125.945'	42.643'	42.643'	125.945'	46.126'
4	429.771'	216.115'	213.656'	48.344'	125.334'	42.436'	42.436'	125.334'	45.886'

TABLE OF GIRDER DIMENSIONS											
GIRDER NO.	"J"	"K"	"L"	"M"	"N"	"O"	"P"	"Q"	"R"	"S"	RADIUS
1	194.289'	10.000'	30.000'	10.000'	191.830'	194.289'	10.000'	30.000'	10.000'	191.830'	1527.000'
2	434.003'	NA	NA	NA	NA	210.731'	15.000'	208.272'	NA	NA	1519.667'
3	431.887'	NA	NA	NA	NA	212.173'	10.000'	209.714'	NA	NA	1512.333'
4	429.771'	NA	NA	NA	NA	211.115'	10.000'	208.656'	NA	NA	1505.000'

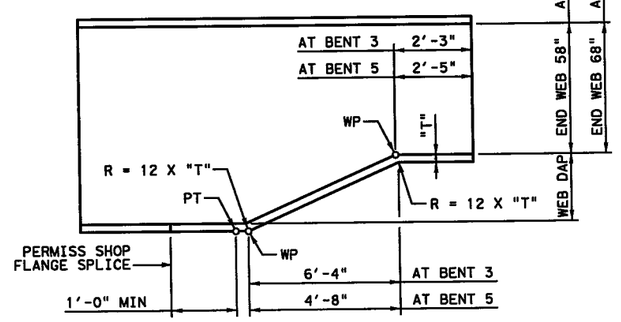

DAPPED END DETAIL

HL 93 LOADING

PESC P.E. Structural Consultants, Inc.
www.PEStructural.com
TBPE Firm No. F-1475

Texas Department of Transportation

© 2012

IH 35W FROM NORTH TARRANT PKWY TO IH 820

440.00' CONTINUOUS PLATE GIRDER UNIT

NB IH 35W ML TO WB US 287

SCALE: NTS — SHEET 3 OF 6

DESIGN	FED.RD. DIV.NO.	FEDERAL AID PROJECT NO.		HIGHWAY NO.
AEB	6	(SEE TITLE SHEET)		IH 35W
GRAPHICS TLS	STATE	DISTRICT	COUNTY	SHEET NO.
CHECK NRR	TEXAS	FTW	TARRANT	
CHECK AB	CONTROL	SECTION	JOB	1467
	0014	16	255, ETC.	

STATE OF TEXAS
NESTOR R. RUBIANO
94294
LICENSED
PROFESSIONAL ENGINEER
7/06/2012

FILENAME: S3BBR*MLN-287W*SG*03.dgn

DRAWING DATE: 7/13/2012

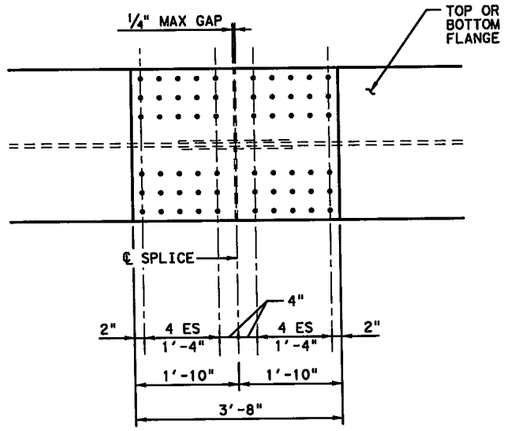

PLAN

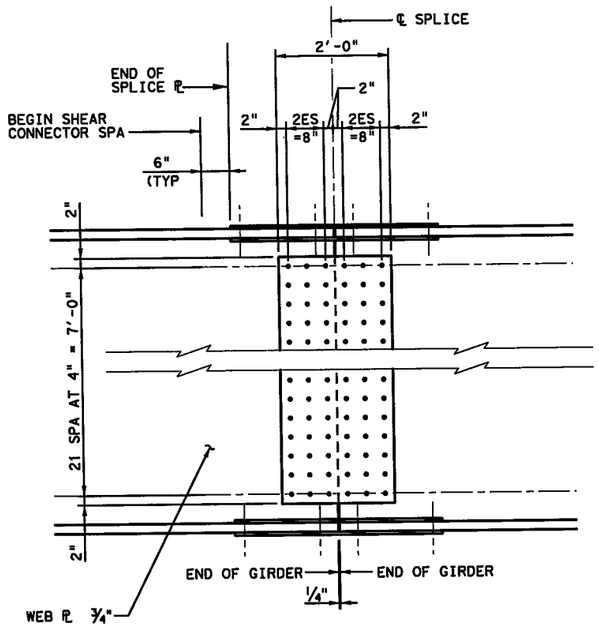

ELEVATION

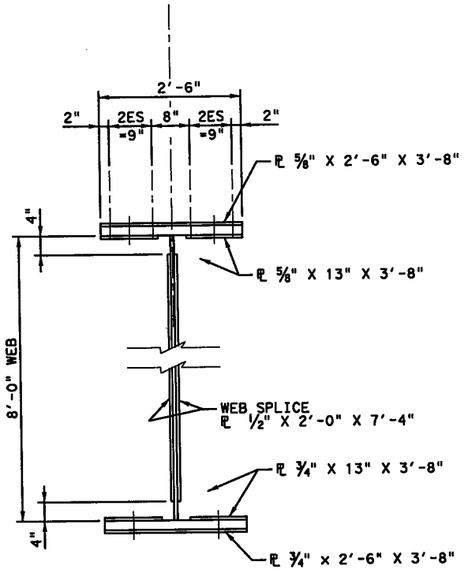

SECTION

OPTIONAL BOLTED FIELD SPLICE "A"

BOLTED FIELD SPLICE SHOWN SHALL BE USED.
EACH SPLICE WEIGHT = 1,800 LBS.

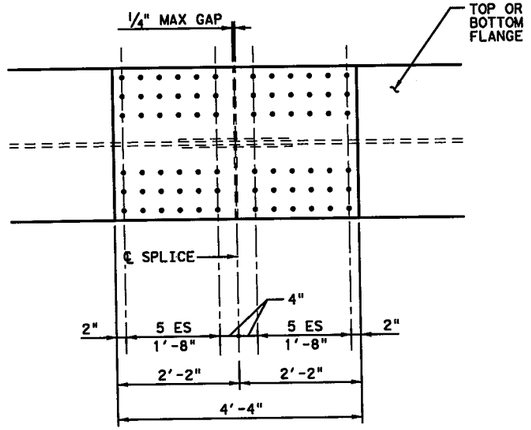

PLAN

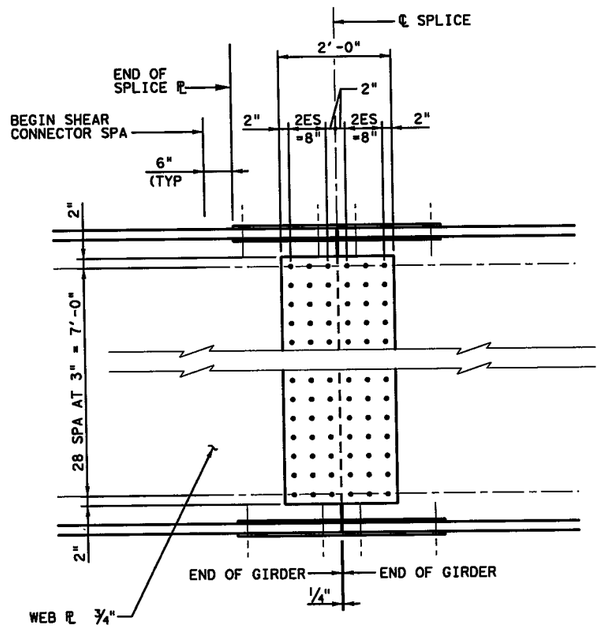

ELEVATION

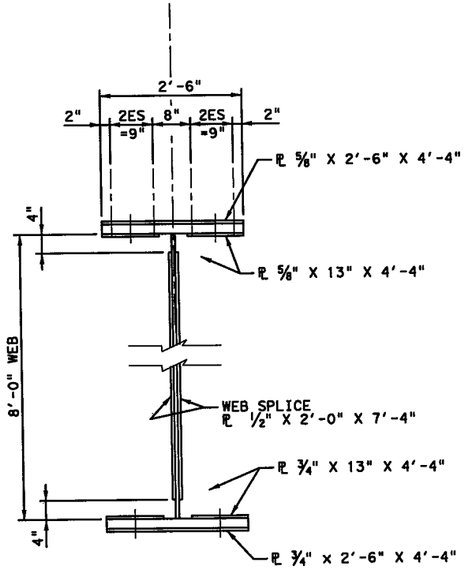

SECTION

OPTIONAL BOLTED FIELD SPLICE "B"

BOLTED FIELD SPLICE SHOWN SHALL BE USED.
EACH SPLICE WEIGHT = 2,093 LBS.

OPTIONAL BOLTED FIELD SPLICE NOTES:

1. ALL BOLTS SHALL BE 1" DIA A325 WITH ONE HARDENED WASHER EACH AND SHALL BE TIGHTENED IN ACCORDANCE WITH ITEM 447. ALL HOLES SHALL BE 1 1/16" DIA.
2. ALL SPLICE PLATES SHALL CONFORM TO A709 GRADE 50.
3. ALL SPLICE PLATES ARE CLASSIFIED AS TENSION COMPONENTS AND SHALL CONFORM TO ITEM 442.2.A.1.
4. BOLTS SHALL BE INSTALLED WITH HEADS ON FASCIA SIDE OF WEB FOR GIRDERS NO. 1 AND NO. 4. BOTTOM FLANGE SPLICE BOLTS SHALL BE INSTALLED WITH HEADS FACING DOWN.
5. STRUCTURAL STEEL PAY WEIGHT SHALL BE BASED ON WELDED FIELD SPLICES REGARDLESS OF SPLICE TYPE CHOSEN.
6. CLASS A SURFACE CONDITION WAS ASSUMED IN DESIGN OF FIELD SPLICES (SLIP COEFFICIENT 0.33).
7. PREPARE FAYING SURFACES AS PER ITEMS 441, 446 AND 447. ENSURE THE REQUIRED FINISH EXISTS AT THE TIME OF BOLTING. DO NOT WIRE BRUSH UNPAINTED FAYING SURFACES.

STATE OF TEXAS
NESTOR R. RUBIANO
94294
LICENSED
PROFESSIONAL ENGINEER

7/06/2012

HL 93 LOADING

PESC
P.E. Structural Consultants, Inc.
www.PEStructural.com
TBPE Firm No. F-1475

Texas Department of Transportation
© 2012

IH 35W FROM NORTH TARRANT PKWY TO IH 820

440.00' CONTINUOUS PLATE GIRDER UNIT

NB IH 35W ML TO WB US 287

SCALE: NTS

SHEET 4 OF 6

DESIGN	FED.RD. DIV.NO.	FEDERAL AID PROJECT NO.		HIGHWAY NO.
AEB	6	(SEE TITLE SHEET)		IH 35W
GRAPHICS TLS	STATE	DISTRICT	COUNTY	SHEET NO.
CHECK NRR	TEXAS	FTW	TARRANT	1468
CHECK AB	CONTROL	SECTION	JOB	
	0014	16	255, ETC.	

FILENAME: S3BBR*MLN-287W*SG*04.dgn
DRAWING DATE: 7/13/2012

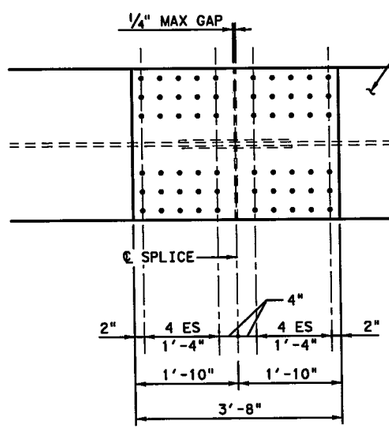

PLAN

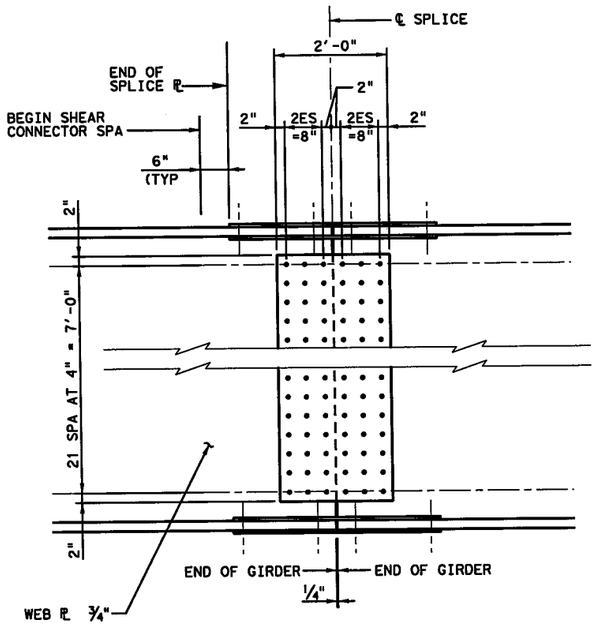

ELEVATION

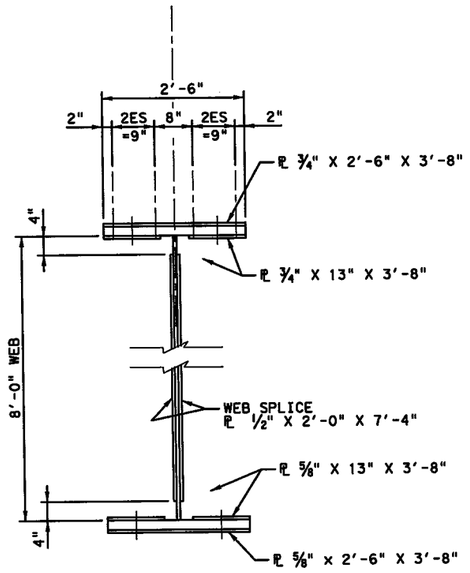

SECTION

OPTIONAL BOLTED FIELD SPLICE "C"

BOLTED FIELD SPLICE SHOWN SHALL BE USED.
EACH SPLICE WEIGHT = 1,887 LBS.

HL 93 LOADING

STATE OF TEXAS
NESTOR R. RUBIANO
94294
LICENSED
PROFESSIONAL ENGINEER

7/06/2012

PESC
P.E. Structural Consultants, Inc.
www.PEStructural.com
TBPE Firm No. F-1475

Texas Department of Transportation

© 2012

IH 35W FROM NORTH TARRANT PKWY TO IH 820

440.00' CONTINUOUS PLATE GIRDER UNIT

NB IH 35W ML TO WB US 287

SCALE: NTS

SHEET 5 OF 6

DESIGN	FED. RD. DIV. NO.	FEDERAL AID PROJECT NO.		HIGHWAY NO.
AEB	6	(SEE TITLE SHEET)		IH 35W
GRAPHICS TLS	STATE	DISTRICT	COUNTY	SHEET NO.
CHECK NRR	TEXAS	FTW	TARRANT	1469
CHECK AB	CONTROL	SECTION	JOB	
	0014	16	255, ETC.	

FILENAME: S38BR*MLN-287W*SG*05.dgn

DRAWING DATE: 7/13/2012

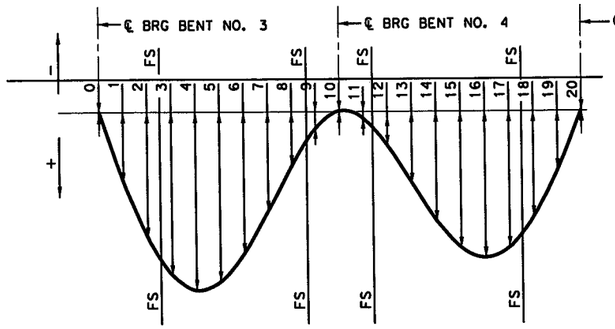

DEAD LOAD DEFLECTION DIAGRAM

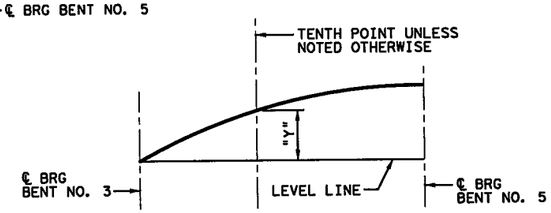

WEB CAMBER DIAGRAM

WEBS MAY BE CUT ON STRAIGHT LINES BETWEEN ORDINATES SHOWN OR TO A SMOOTH CURVE AT THE FABRICATOR'S OPTION. ORDINATES SHOWN INCLUDE TOTAL DEAD LOAD DEFLECTION AND VERTICAL CURVE CORRECTIONS.

TABLE OF ESTIMATED QUANTITIES

SPAN	REINF CONC SLAB	REINFORCING STEEL ⑨	CL S CONC (HPC)	STRUCTURAL STEEL (PL GIRDER)
NO.	SF	LB	CY	LB
3	6,124	42,868	179.1	473,300
4	6,124	42,868	179.1	473,200
TOTAL	12,248	85,736	358.2	946,500

⑨ REINFORCING STEEL WEIGHT IS CALCULATED USING AN APPROXIMATE FACTOR OF 7.0 LBS PER SQ FT.

PLATE GIRDER FABRICATION NOTES:

1. ALL STRUCTURAL STEEL INCLUDING STIFFENERS AND DIAPHRAGMS SHALL CONFORM TO ASTM A709 GR. 50 AND SHALL BE PAID FOR AT THE UNIT PRICE BID FOR STRUCTURAL STEEL (PLATE GIRDER). ALL STRUCTURAL STEEL SHALL BE PAINTED. PAINT SYSTEM FOR STEEL GIRDERS SHALL BE PROTECTION SYSTEM II. THIS SYSTEM SHALL CONFORM TO TXDOT STANDARD SPECIFICATION ITEM 446.
2. GIRDER TENSION FLANGES AND WEBS ARE CLASSIFIED AS TENSION COMPONENTS AND SHALL CONFORM TO ITEM 442.2.A.1.
3. ALL DIMENSIONS SHOWN IN GIRDER ELEVATIONS ARE HORIZONTAL ARC DIMENSIONS.
4. EXCEPT AT CHANGES IN SECTION, SHOP OR FIELD FLANGE AND WEB SPLICES IN PLATE GIRDERS MAY BE LOCATED AS DESIRABLE TO OPTIMIZE PLATE LENGTHS AND ERECTION PROCEDURES, EXCEPT THAT SPLICES WILL NOT BE ALLOWED WHERE A 40FT OR LESS UNSPLICED LENGTH WOULD SUFFICE; NEITHER WILL TENSION FLANGE SPLICES BE ALLOWED WITHIN 0.05S EITHER SIDE OF INTERIOR BEARINGS, WITHIN 0.10S EITHER SIDE OF THE CENTERLINES OF INTERIOR SPANS, NOR WITHIN THE RANGE BETWEEN 0.30S AND 0.50S FROM THE END BEARINGS (S = LENGTH C.C. BEARING OF SPAN IN WHICH THE SPLICE IS MADE).
5. FLANGE AND WEB SPLICES SHALL BE MADE BY FULL PENETRATION GROOVE WELDS IN ACCORDANCE WITH ITEM 441 "STEEL STRUCTURES".

FS = FIELD SPLICE

TABLE OF DEAD LOAD DEFLECTIONS

DUE TO CAST IN PLACE CONCRETE (FT)

	LOCATION	GIRDER NO. 1	2	3	4
SPAN 3	0	0.000	0.000	0.000	0.000
	1	0.140	0.121	0.101	0.082
	2	0.248	0.214	0.179	0.145
	FS1	0.269	0.231	0.194	0.157
	3	0.322	0.277	0.233	0.188
	4	0.352	0.303	0.255	0.207
	5	0.337	0.291	0.246	0.201
	6	0.283	0.245	0.208	0.171
	7	0.201	0.176	0.150	0.124
	8	0.111	0.099	0.084	0.069
	FS2	0.108	0.096	0.082	0.067
	9	0.037	0.033	0.027	0.021
	10	0.000	0.000	0.000	0.000
SPAN 4	11	0.011	0.016	0.018	0.020
	FS3	0.060	0.065	0.066	0.065
	12	0.061	0.066	0.067	0.066
	13	0.134	0.131	0.126	0.120
	14	0.205	0.193	0.180	0.166
	15	0.257	0.236	0.216	0.195
	16	0.278	0.252	0.227	0.202
	17	0.259	0.234	0.209	0.183
	FS4	0.214	0.192	0.170	0.149
	18	0.203	0.182	0.162	0.141
	19	0.116	0.104	0.092	0.080
	20	0.000	0.000	0.000	0.000

TABLE OF DEAD LOAD DEFLECTIONS

TOTAL INCLUDING STEEL (FT)

	LOCATION	GIRDER NO. 1	2	3	4
SPAN 3	0	0.000	0.000	0.000	0.000
	1	0.212	0.183	0.155	0.126
	2	0.375	0.324	0.274	0.225
	FS1	0.406	0.351	0.297	0.243
	3	0.485	0.420	0.356	0.292
	4	0.529	0.459	0.390	0.322
	5	0.505	0.440	0.376	0.312
	6	0.421	0.369	0.318	0.266
	7	0.296	0.264	0.229	0.193
	8	0.161	0.146	0.128	0.108
	FS2	0.156	0.143	0.125	0.105
	9	0.052	0.048	0.041	0.034
	10	0.000	0.000	0.000	0.000
SPAN 4	11	0.021	0.026	0.029	0.030
	FS3	0.100	0.104	0.103	0.100
	12	0.101	0.105	0.105	0.101
	13	0.215	0.207	0.196	0.183
	14	0.326	0.303	0.279	0.254
	15	0.406	0.370	0.335	0.299
	16	0.436	0.393	0.351	0.309
	17	0.407	0.364	0.323	0.281
	FS4	0.335	0.299	0.263	0.228
	18	0.318	0.284	0.250	0.217
	19	0.181	0.161	0.141	0.122
	20	0.000	0.000	0.000	0.000

TABLE OF CAMBER ORDINATES

"Y" VALUES IN FEET

	LOCATION	GIRDER NO. 1	2	3	4
SPAN 3	0	0.00	0.00	0.00	0.00
	1	0.65	0.62	0.59	0.56
	2	1.25	1.20	1.15	1.10
	FS1	1.39	1.33	1.28	1.22
	3	1.80	1.73	1.67	1.61
	4	2.28	2.21	2.14	2.07
	5	2.69	2.63	2.57	2.50
	6	3.05	3.00	2.95	2.89
	7	3.36	3.33	3.29	3.26
	8	3.66	3.64	3.63	3.61
	FS2	3.67	3.65	3.64	3.62
	9	3.93	3.93	3.92	3.91
	10	4.21	4.21	4.21	4.21
SPAN 4	11	4.50	4.50	4.51	4.51
	FS3	4.79	4.79	4.79	4.79
	12	4.79	4.80	4.80	4.79
	13	5.07	5.06	5.05	5.03
	14	5.28	5.26	5.23	5.21
	15	5.41	5.37	5.34	5.30
	16	5.43	5.39	5.35	5.31
	17	5.35	5.30	5.26	5.22
	FS4	5.18	5.14	5.11	5.07
	18	5.14	5.11	5.07	5.04
	19	4.83	4.81	4.79	4.77
	20	4.43	4.43	4.43	4.43

BAR TABLE

BAR	SIZE
A	#5
B	#5
D	#5
G	#5
H	#5
J	#5
M	#5
T	#4

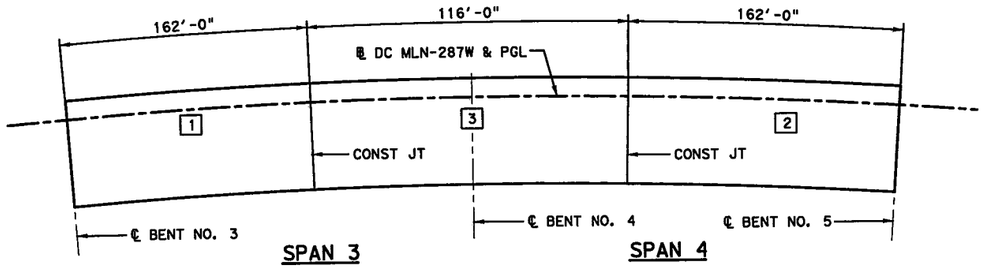

CONCRETE PLACEMENT SEQUENCE

CONTINUOUS PLACEMENT WILL NOT BE PERMITTED

GIRDER SLOPE TABLE (FT/FT)

LOCATION	GIRDER NO. 1	2	3	4
℄ BRG BENT NO. 3	0.020'	0.020'	0.020'	0.020'
℄ BRG BENT NO. 4	0.014'	0.014'	0.014'	0.014'
℄ BRG BENT NO. 5	-0.012'	-0.012'	-0.012'	-0.012'

STATE OF TEXAS
NESTOR R. RUBIANO
94294
LICENSED PROFESSIONAL ENGINEER

7/06/2012

HL 93 LOADING

P.E. Structural Consultants, Inc.
www.PEStructural.com
TBPE Firm No. F-1475

Texas Department of Transportation
© 2012

IH 35W FROM NORTH TARRANT PKWY TO IH 820

440.00' CONTINUOUS PLATE GIRDER UNIT

NB IH 35W ML TO WB US 287

SCALE: NTS — SHEET 6 OF 6

DESIGN	FED.RD. DIV.NO.	FEDERAL AID PROJECT NO.		HIGHWAY NO.
AEB	6	(SEE TITLE SHEET)		IH 35W
GRAPHICS TLS	STATE	DISTRICT	COUNTY	SHEET NO.
CHECK NRR	TEXAS	FTW	TARRANT	1470
CHECK AB	CONTROL 0014	SECTION 16	JOB 255, ETC.	

FILENAME: S3BBR#MLN-287W#SG#06.dgn
DRAWING DATE: 7/13/2012

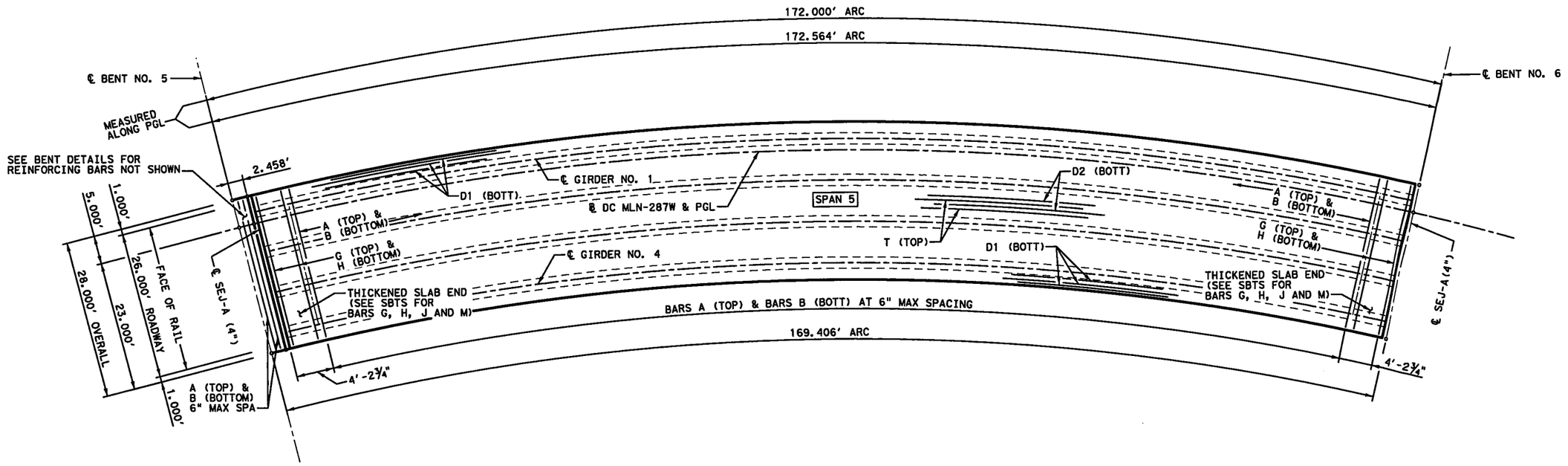

PLAN

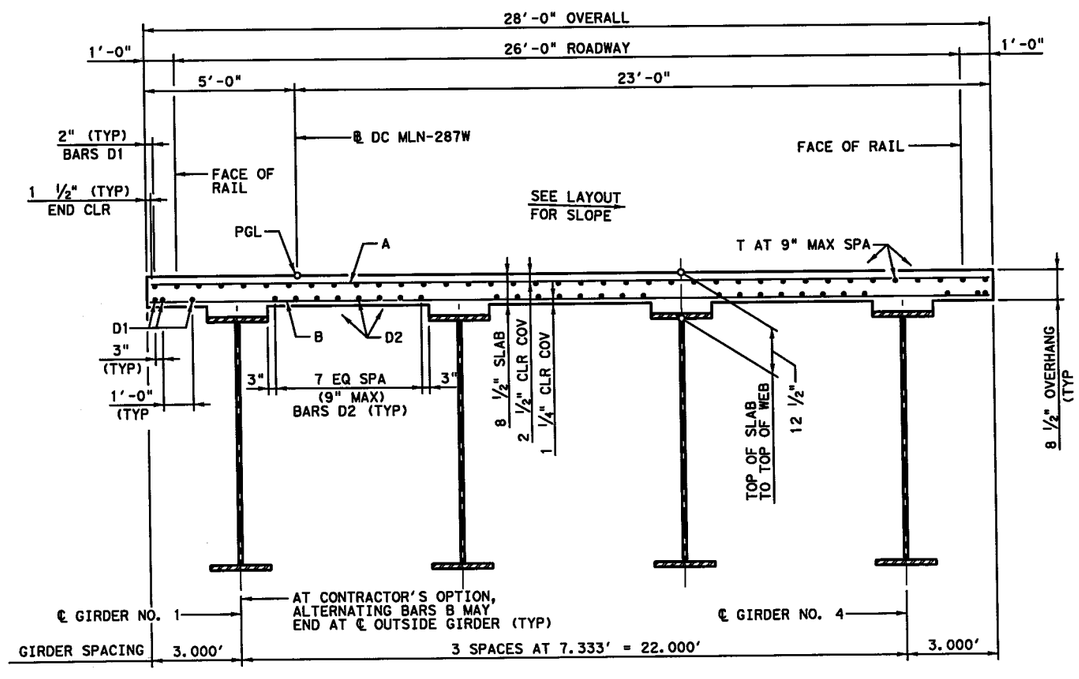

TYPICAL RADIAL SECTION

GENERAL NOTES:

1. DESIGNED ACCORDING TO AASHTO LRFD BRIDGE DESIGN SPECIFICATIONS, 5TH EDITION (2010).
2. CLASS "S" (HPC) CONCRETE STRENGTH F'C = 4,000 PSI.
3. ALL REINFORCING SHALL BE GRADE 60 AND EPOXY COATED.
4. SEE SBTS STANDARD FOR THICKENED SLAB END DETAILS AND QUANTITY ADJUSTMENTS.
5. PRESTRESSED CONCRETE PANELS (PCP) SHALL NOT BE PERMITTED.
6. SEE PMDF STANDARD FOR OPTIONAL STAY IN PLACE FORMING DETAILS.
7. SEE SBMS STANDARD FOR MISCELLANEOUS SLAB DETAILS.
8. SEE SGEB STANDARD FOR BEARING DETAILS.
9. SEE RAIL STANDARD FOR RAIL ANCHORAGE IN SLAB.
10. BAR LAPS, WHERE REQUIRED, TO BE AS FOLLOWS:
    #4 = 2'-1"
    #5 = 2'-7"

STATE OF TEXAS
NESTOR R. RUBIANO
94294
LICENSED PROFESSIONAL ENGINEER

7/06/2012

HL 93 LOADING

PESC P.E. Structural Consultants, Inc.
www.PEStructural.com
TBPE Firm No. F-1475

Texas Department of Transportation
© 2012

IH 35W FROM NORTH TARRANT PKWY TO IH 820

172.00' PLATE GIRDER UNIT

NB IH 35W ML TO WB US 287

SCALE: NTS — SHEET 1 OF 6

DESIGN	FED.RD. DIV.NO.	FEDERAL AID PROJECT NO.		HIGHWAY NO.
AEB	6	(SEE TITLE SHEET)		IH 35W
GRAPHICS TLS	STATE	DISTRICT	COUNTY	SHEET NO.
CHECK NRR	TEXAS	FTW	TARRANT	1471
CHECK AB	CONTROL 0014	SECTION 16	JOB 255, ETC.	

FILENAME: S3BBR*MLN-287W*SG*07.dgn
DRAWING DATE: 7/13/2012

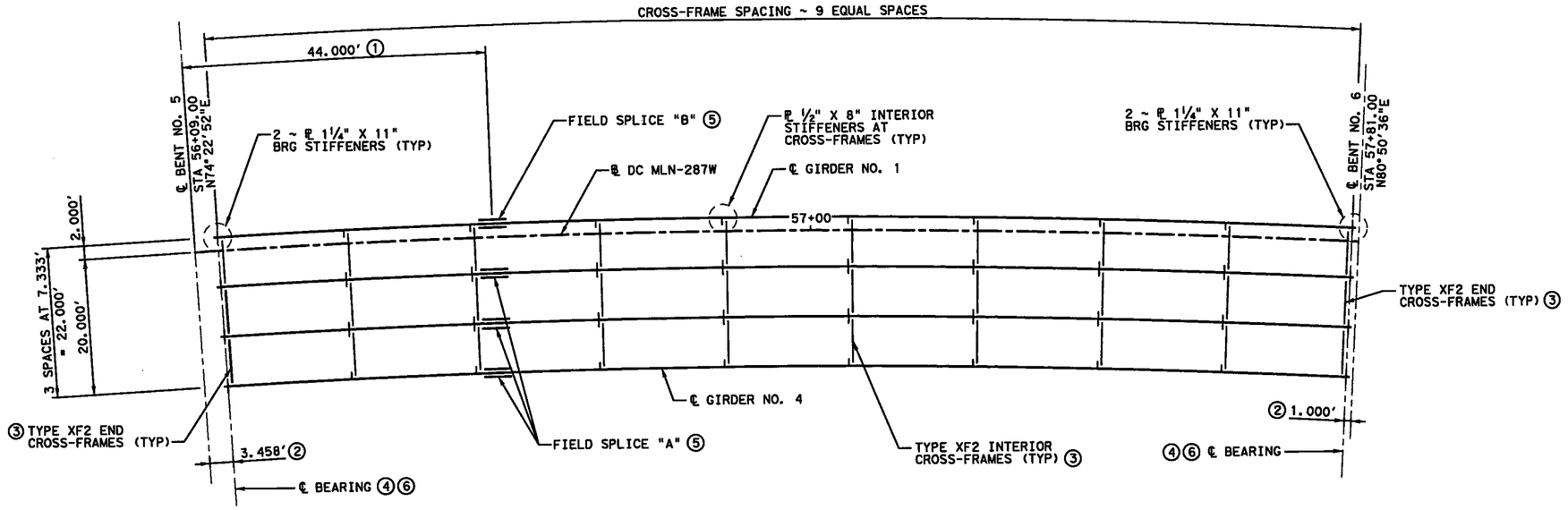

FRAMING PLAN SPAN 5

TABLE OF GIRDER RADII	
GIRDER #1	1527.000'
℄ DC MLN-287W	1525.000'
GIRDER #2	1519.667'
GIRDER #3	1512.333'
GIRDER #4	1505.000'

TABLE OF CROSS-FRAMES MEMBER SIZES ③		
MEMBER	TYPE "XF2" END CROSS-FRAMES	TYPE "XF2" INTERIOR CROSS-FRAMES
TOP CHORD	5" x 5" x ½"	5" x 5" x ½"
BOTTOM CHORD	5" x 5" x ½"	5" x 5" x ½"
DIAGONALS	5" x 5" x ½"	5" x 5" x ½"

① MEASURED ALONG ℄ DC MLN-287W.
② MEASURED PERPENDICULAR TO ℄ BENT.
③ SEE SGMD STANDARDS FOR ADDITIONAL DETAILS.
④ SEE SGEB STANDARD FOR BEARING DETAILS.
⑤ SEE BOLTED FIELD SPLICE DETAILS ON SHEET 5 OF 6.
⑥ SEE GIRDER ELEVATIONS ON SHEETS 3 AND 4 OF 6 FOR BEARING TYPES.

STATE OF TEXAS
NESTOR R. RUBIANO
94294
LICENSED PROFESSIONAL ENGINEER
7/06/2012

HL 93 LOADING

PESC P.E. Structural Consultants, Inc.
www.PEStructural.com
TBPE Firm No. F-1475

Texas Department of Transportation
© 2012

IH 35W FROM NORTH TARRANT PKWY TO IH 820

172.00'
PLATE GIRDER UNIT

NB IH 35W ML TO WB US 287

SCALE: NTS — SHEET 2 OF 6

DESIGN	FED.RD. DIV.NO.	FEDERAL AID PROJECT NO.		HIGHWAY NO.
AEB	6	(SEE TITLE SHEET)		IH 35W
GRAPHICS TLS	STATE	DISTRICT	COUNTY	SHEET NO.
CHECK NRR	TEXAS	FTW	TARRANT	1472
CHECK AB	CONTROL	SECTION	JOB	
	0014	16	255, ETC.	

FILENAME: S3BBR#MLN-287W#SG#08.dgn
DRAWING DATE: 7/13/2012

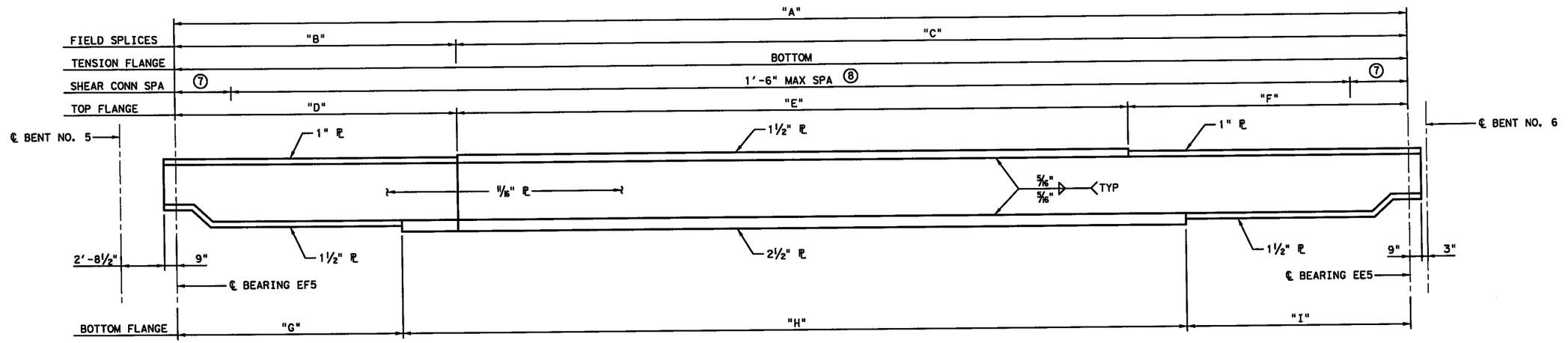

SPAN 5

⑦ 4 SPA = 2'-0"

⑧ NOTE OMISSION OF STUDS AT OPTIONAL BOLTED SPLICES.

ELEVATION ~ GIRDER NO. 1

ALL WEB PLATES ARE 76" DEEP EXCEPT AT DAPPED ENDS. ALL FLANGE PLATES ARE 24" WIDE.

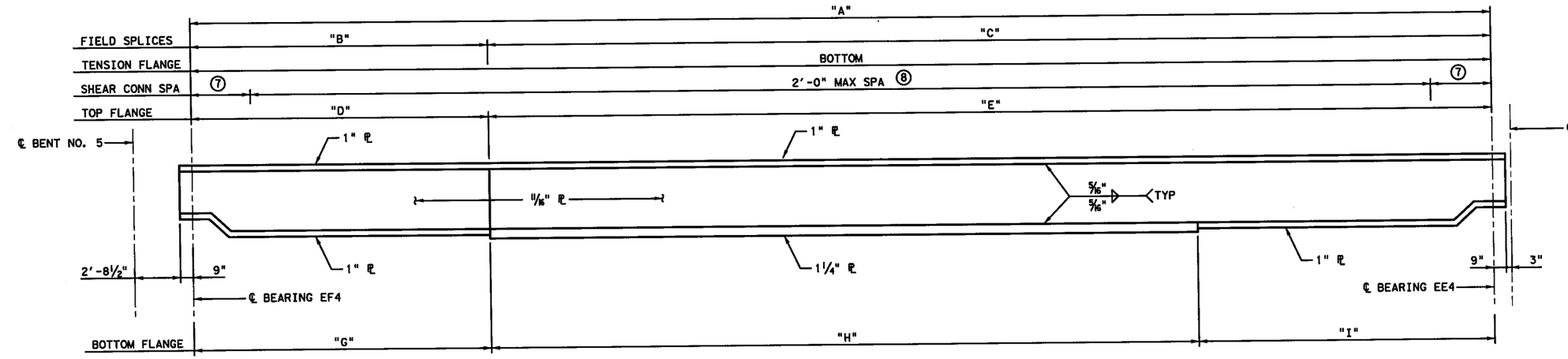

SPAN 5

ELEVATION ~ GIRDER NO. 2

TABLE OF GIRDER DIMENSIONS										
GIRDER NO.	"A"	"B"	"C"	"D"	"E"	"F"	"G"	"H"	"I"	RADIUS
1	167.768	40.600	127.168	40.600	86.613	40.555	35.600	96.613	35.555	1527.000
2	166.941	40.388	126.553	40.388	126.553	NA	40.388	86.198	40.355	1519.667
3	166.113	40.177	125.936	40.177	125.936	NA	40.177	85.782	40.154	1512.333
4	165.286	39.965	125.321	39.965	125.321	NA	39.965	85.366	39.955	1505.000

STATE OF TEXAS
NESTOR R. RUBIANO
94294
LICENSED
PROFESSIONAL ENGINEER
7/06/2012

HL 93 LOADING

PESC P.E. Structural Consultants, Inc.
www.PEStructural.com
TBPE Firm No. F-1475

Texas Department of Transportation
© 2012

IH 35W FROM NORTH TARRANT PKWY TO IH 820

172.00'
PLATE GIRDER UNIT

NB IH 35W ML TO WB US 287

SCALE: NTS — SHEET 3 OF 6

DESIGN	FED.RD. DIV. NO.	FEDERAL AID PROJECT NO.		HIGHWAY NO.
AEB	6	(SEE TITLE SHEET)		IH 35W
GRAPHICS TLS	STATE	DISTRICT	COUNTY	SHEET NO.
CHECK NRR	TEXAS	FTW	TARRANT	
CHECK AB	CONTROL	SECTION	JOB	1473
	0014	16	255, ETC.	

FILENAME: S3BBR*MLN-287W*SG*09.dgn
DRAWING DATE: 7/13/2012

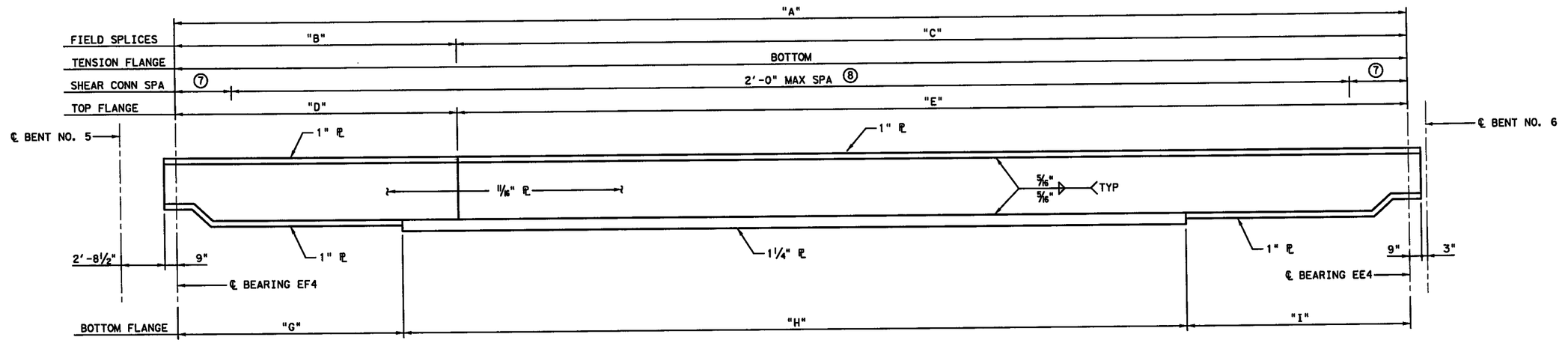

SPAN 5

⑦ 4 SPA = 2'-0"

⑧ NOTE OMISSION OF STUDS AT OPTIONAL BOLTED SPLICES.

ELEVATION ~ GIRDER NO. 3

ALL WEB PLATES ARE 76" DEEP EXCEPT AT DAPPED ENDS. ALL FLANGE PLATES ARE 24" WIDE.

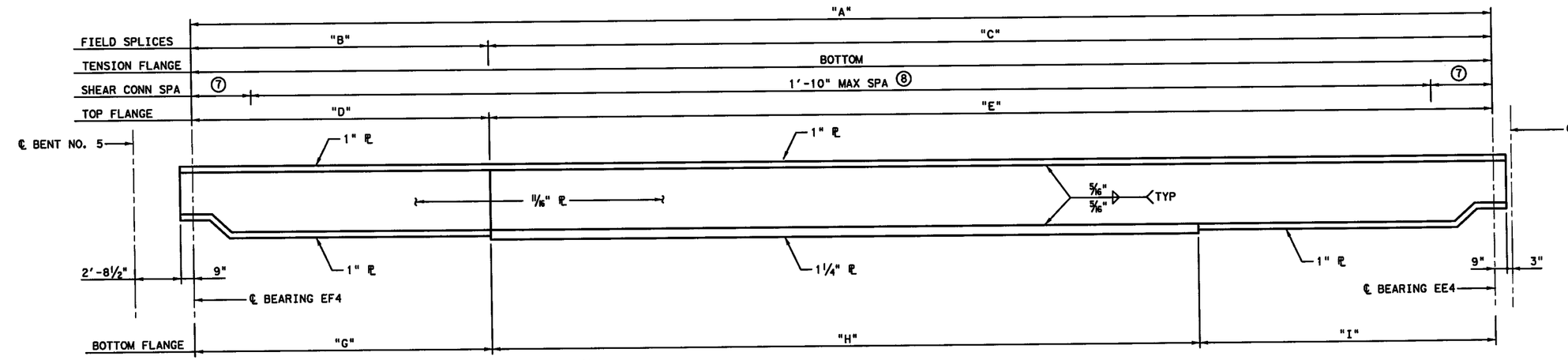

SPAN 5

ELEVATION ~ GIRDER NO. 4

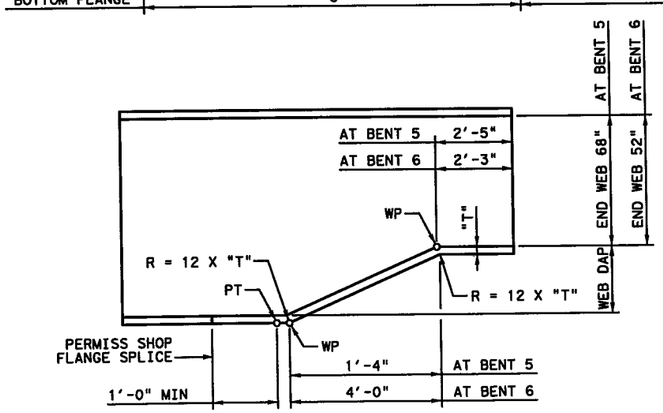

DAPPED END DETAIL

HL 93 LOADING

STATE OF TEXAS
NESTOR R. RUBIANO
94294
LICENSED
PROFESSIONAL ENGINEER

7/06/2012

P.E. Structural Consultants, Inc.
www.PEStructural.com
TBPE Firm No. F-1475

Texas Department of Transportation

© 2012

IH 35W FROM NORTH TARRANT PKWY TO IH 820

172.00'
PLATE GIRDER UNIT

NB IH 35W ML TO WB US 287

SCALE: NTS

SHEET 4 OF 6

DESIGN	FED.RD. DIV.NO.	FEDERAL AID PROJECT NO.		HIGHWAY NO.
AEB	6	(SEE TITLE SHEET)		IH 35W
GRAPHICS TLS	STATE	DISTRICT	COUNTY	SHEET NO.
CHECK NRR	TEXAS	FTW	TARRANT	1474
CHECK AB	CONTROL	SECTION	JOB	
	0014	16	255, ETC.	

FILENAME: S3BBR*ML1N-287W*SG*10.dgn

DRAWING DATE: 7/13/2012

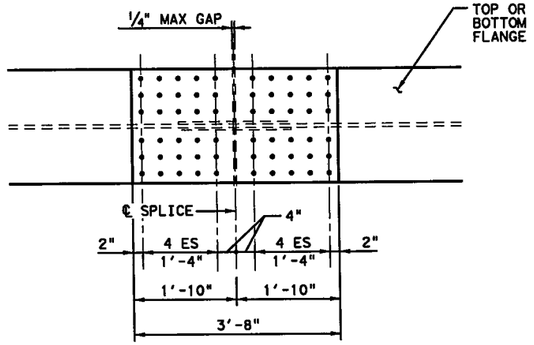

PLAN

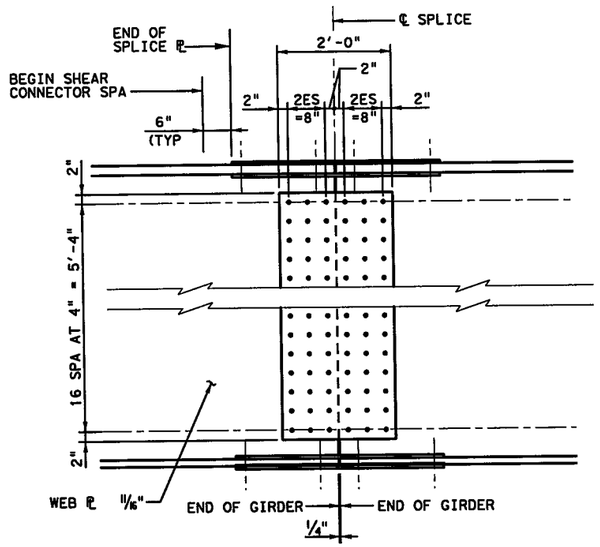

ELEVATION

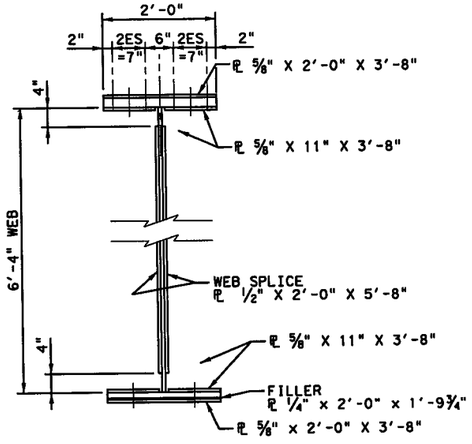

SECTION

OPTIONAL BOLTED FIELD SPLICE "A"

BOLTED FIELD SPLICE SHOWN SHALL BE USED.
EACH SPLICE WEIGHT = 1,772 LBS.

OPTIONAL BOLTED FIELD SPLICE NOTES:

1. ALL BOLTS SHALL BE 1" DIA A325 WITH ONE HARDENED WASHER EACH AND SHALL BE TIGHTENED IN ACCORDANCE WITH ITEM 447. ALL HOLES SHALL BE 1 1/16" DIA.
2. ALL SPLICE PLATES SHALL CONFORM TO A709 GRADE 50.
3. ALL SPLICE PLATES ARE CLASSIFIED AS TENSION COMPONENTS AND SHALL CONFORM TO ITEM 442.2.A.1.
4. BOLTS SHALL BE INSTALLED WITH HEADS ON FASCIA SIDE OF WEB FOR GIRDERS NO. 1 AND NO. 4. BOTTOM FLANGE SPLICE BOLTS SHALL BE INSTALLED WITH HEADS FACING DOWN.
5. STRUCTURAL STEEL PAY WEIGHT SHALL BE BASED ON WELDED FIELD SPLICES REGARDLESS OF SPLICE TYPE CHOSEN.
6. CLASS A SURFACE CONDITION WAS ASSUMED IN DESIGN OF FIELD SPLICES (SLIP COEFFICIENT 0.33).
7. PREPARE FAYING SURFACES AS PER ITEMS 441, 446 AND 447. ENSURE THE REQUIRED FINISH EXISTS AT THE TIME OF BOLTING. DO NOT WIRE BRUSH UNPAINTED FAYING SURFACES.

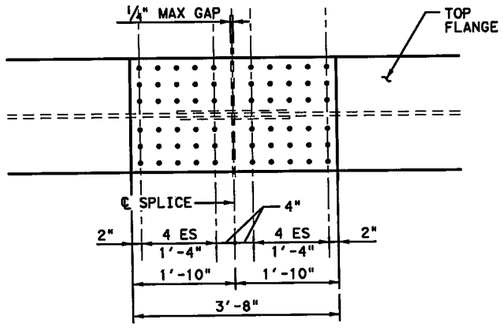

PLAN ~ TOP FLANGE

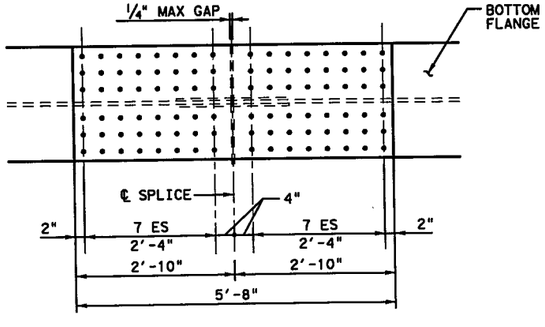

PLAN ~ BOTTOM FLANGE

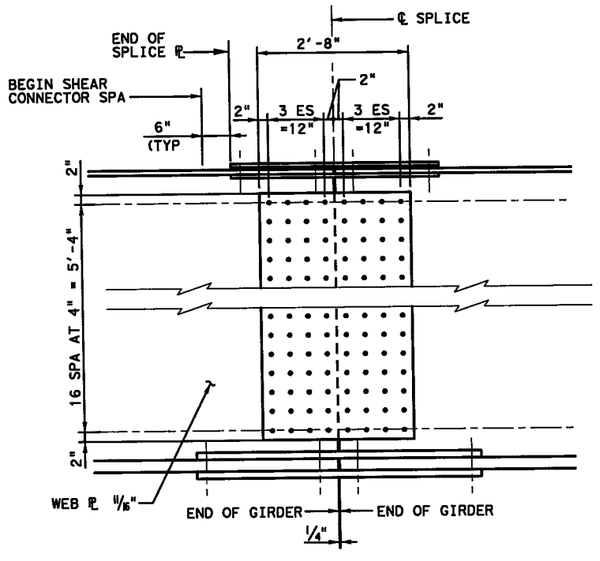

ELEVATION

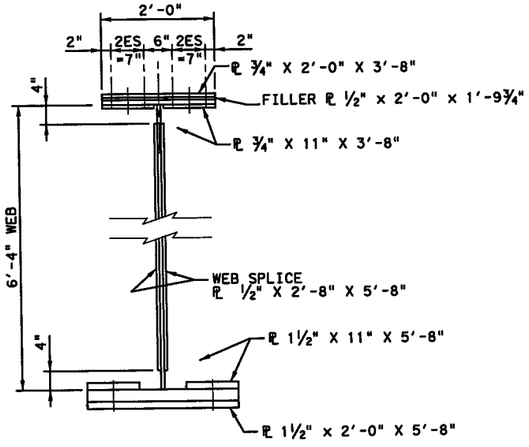

SECTION

OPTIONAL BOLTED FIELD SPLICE "B"

BOLTED FIELD SPLICE SHOWN SHALL BE USED.
EACH SPLICE WEIGHT = 3,182 LBS.

STATE OF TEXAS
NESTOR R. RUBIANO
94294
LICENSED
PROFESSIONAL ENGINEER

7/06/2012

HL 93 LOADING

PESC P.E. Structural Consultants, Inc.
www.PEStructural.com
TBPE Firm No. F-1475

Texas Department of Transportation
© 2012

IH 35W FROM NORTH TARRANT PKWY TO IH 820

172.00'
PLATE GIRDER UNIT

NB IH 35W ML TO WB US 287

SCALE: NTS — SHEET 5 OF 6

DESIGN	FED.RD. DIV.NO.	FEDERAL AID PROJECT NO.		HIGHWAY NO.
AEB	6	(SEE TITLE SHEET)		IH 35W
GRAPHICS TLS	STATE	DISTRICT	COUNTY	SHEET NO.
CHECK NRR	TEXAS	FTW	TARRANT	1475
CHECK AB	CONTROL	SECTION	JOB	
	0014	16	255, ETC.	

FILENAME: S3BBR*MLN-287W*SG*11.dgn
DRAWING DATE: 7/13/2012

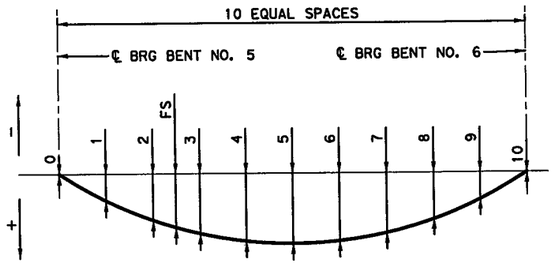

DEAD LOAD DEFLECTION DIAGRAM

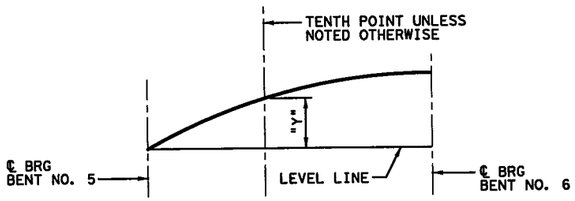

WEB CAMBER DIAGRAM

WEBS MAY BE CUT ON STRAIGHT LINES BETWEEN ORDINATES SHOWN OR TO A SMOOTH CURVE AT THE FABRICATOR'S OPTION. ORDINATES SHOWN INCLUDE TOTAL DEAD LOAD DEFLECTION AND VERTICAL CURVE CORRECTIONS.

BAR TABLE	
BAR	SIZE
A	#5
B	#5
D	#5
G	#5
H	#5
J	#5
M	#5
T	#4

TABLE OF ESTIMATED QUANTITIES

SPAN	REINF CONC SLAB	REINFORCING STEEL ⑨	CL S CONC (HPC)	STRUCTURAL STEEL (PL GIRDER)
NO.	SF	LB	CY	LB
5	4,788	33,516	138.0	281,800

⑨ REINFORCING STEEL WEIGHT IS CALCULATED USING AN APPROXIMATE FACTOR OF 7.0 LBS PER SQ FT.

FS = FIELD SPLICE

TABLE OF DEAD LOAD DEFLECTIONS

DUE TO CAST IN PLACE CONCRETE (FT)

	LOCATION	GIRDER NO. 1	2	3	4
SPAN 5	0	0.000	0.000	0.000	0.000
	1	0.158	0.145	0.133	0.121
	2	0.292	0.269	0.248	0.226
	FS1	0.339	0.313	0.288	0.263
	3	0.394	0.366	0.337	0.308
	4	0.458	0.427	0.394	0.360
	5	0.481	0.448	0.414	0.378
	6	0.460	0.427	0.395	0.360
	7	0.396	0.367	0.338	0.308
	8	0.295	0.271	0.249	0.227
	9	0.160	0.146	0.134	0.122
	10	0.000	0.000	0.000	0.000

TABLE OF DEAD LOAD DEFLECTIONS

TOTAL INCLUDING STEEL (FT)

	LOCATION	GIRDER NO. 1	2	3	4
SPAN 5	0	0.000	0.000	0.000	0.000
	1	0.236	0.211	0.189	0.167
	2	0.435	0.393	0.352	0.312
	FS1	0.505	0.456	0.410	0.363
	3	0.587	0.533	0.480	0.426
	4	0.682	0.622	0.561	0.498
	5	0.716	0.652	0.588	0.522
	6	0.683	0.622	0.561	0.498
	7	0.588	0.534	0.481	0.426
	8	0.438	0.395	0.354	0.313
	9	0.238	0.213	0.190	0.168
	10	0.000	0.000	0.000	0.000

TABLE OF CAMBER ORDINATES

"Y" VALUES IN FEET

	LOCATION	GIRDER NO. 1	2	3	4
SPAN 5	0	3.73	3.73	3.73	3.73
	1	3.74	3.72	3.69	3.67
	2	3.68	3.64	3.60	3.56
	FS1	3.63	3.59	3.54	3.49
	3	3.54	3.49	3.44	3.38
	4	3.32	3.25	3.19	3.13
	5	2.99	2.93	2.86	2.80
	6	2.57	2.51	2.45	2.38
	7	2.05	2.00	1.94	1.89
	8	1.45	1.40	1.36	1.32
	9	0.76	0.73	0.71	0.69
	10	0.00	0.00	0.00	0.00

GIRDER SLOPE TABLE (FT/FT)

LOCATION	GIRDER NO. 1	2	3	4
℄ BRG BENT NO. 5	-0.012	-0.012	-0.012	-0.012
℄ BRG BENT NO. 6	-0.032	-0.032	-0.032	-0.032

PLATE GIRDER FABRICATION NOTES:

1. ALL STRUCTURAL STEEL INCLUDING STIFFENERS AND DIAPHRAGMS SHALL CONFORM TO ASTM A709 GR. 50 AND SHALL BE PAID FOR AT THE UNIT PRICE BID FOR STRUCTURAL STEEL (PLATE GIRDER). ALL STRUCTURAL STEEL SHALL BE PAINTED. PAINT SYSTEM FOR STEEL GIRDERS SHALL BE PROTECTION SYSTEM II. THIS SYSTEM SHALL CONFORM TO TXDOT STANDARD SPECIFICATION ITEM 446.
2. GIRDER TENSION FLANGES AND WEBS ARE CLASSIFIED AS TENSION COMPONENTS AND SHALL CONFROM TO ITEM 442.2.A.1.
3. ALL DIMENSIONS SHOWN IN GIRDER ELEVATIONS ARE HORIZONTAL ARC DIMENSIONS.
4. EXCEPT AT CHANGES IN SECTION, SHOP OR FIELD FLANGE AND WEB SPLICES IN PLATE GIRDERS MAY BE LOCATED AS DESIRABLE TO OPTIMIZE PLATE LENGTHS AND ERECTION PROCEDURES, EXCEPT THAT SPLICES WILL NOT BE ALLOWED WHERE A 40FT OR LESS UNSPLICED LENGTH WOULD SUFFICE; NEITHER WILL TENSION FLANGE SPLICES BE ALLOWED WITHIN 0.05S EITHER SIDE OF INTERIOR BEARINGS, WITHIN 0.10S EITHER SIDE OF THE CENTERLINES OF INTERIOR SPANS, NOR WITHIN THE RANGE BETWEEN 0.30S AND 0.50S FROM THE END BEARINGS (S = LENGTH C.C. BEARING OF SPAN IN WHICH THE SPLICE IS MADE).
5. FLANGE AND WEB SPLICES SHALL BE MADE BY FULL PENETRATION GROOVE WELDS IN ACCORDANCE WITH ITEM 441 "STEEL STRUCTURES".

STATE OF TEXAS
NESTOR R. RUBIANO
94294
LICENSED
PROFESSIONAL ENGINEER

7/06/2012

HL 93 LOADING

PESC P.E. Structural Consultants, Inc.
www.PEStructural.com
TBPE Firm No. F-1475

Texas Department of Transportation
© 2012

IH 35W FROM NORTH TARRANT PKWY TO IH 820

172.00'
PLATE GIRDER UNIT

NB IH 35W ML TO WB US 287

SCALE: NTS — SHEET 6 OF 6

DESIGN	FED.RD. DIV.NO.	FEDERAL AID PROJECT NO.		HIGHWAY NO.
AEB	6	(SEE TITLE SHEET)		IH 35W
GRAPHICS TLS	STATE	DISTRICT	COUNTY	SHEET NO.
CHECK NRR	TEXAS	FTW	TARRANT	1476
CHECK AB	CONTROL 0014	SECTION 16	JOB 255, ETC.	

DRAWING DATE: 7/13/2012 FILENAME: S3BBR*MLN-287W*SG*12.dgn

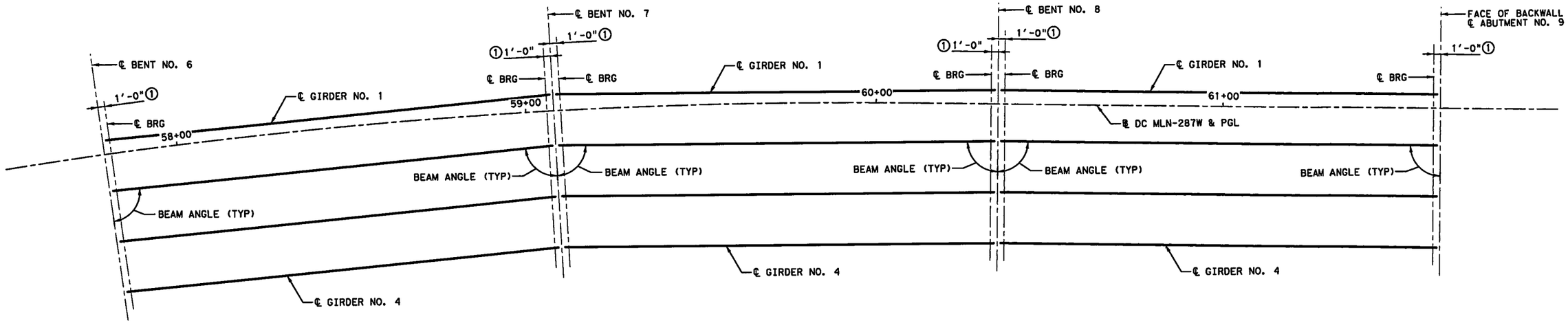

SPAN 6
(TX54 GIRDERS)

SPAN 7
(TX54 GIRDERS)

SPAN 8
(TX54 GIRDERS)

① SEE IGEB STANDARD FOR ORIENTATION OF DIMENSION.

② GIRDER LENGTHS SHOWN ARE BOTTOM GIRDER FLANGE LENGTHS WITH ADJUSTMENTS MADE FOR BEAM SLOPE.

BENT REPORT

BENT NO. 6 (S 80 50 35.73 W)
DISTANCE BETWEEN STATION LINE AND BEAM 1 2.000 L

		BEAM SPAC. (C.L. BENT)	BEAM ANGLE D M S
SPAN 6	BEAM 1	0.000	87 57 6
	BEAM 2	7.333	87 57 12
	BEAM 3	7.333	87 57 18
	BEAM 4	7.333	87 57 24
	TOTAL	22.000	

BENT NO. 7 (S 85 36 53.19 W)
DISTANCE BETWEEN STATION LINE AND BEAM 1 2.750 L

		BEAM SPAC. (C.L. BENT)	BEAM ANGLE D M S
SPAN 6	BEAM 1	0.000	87 16 35
	BEAM 2	7.333	87 16 29
	BEAM 3	7.333	87 16 23
	BEAM 4	7.333	87 16 18
	TOTAL	22.000	

BENT NO. 7 (S 85 36 53.19 W)
DISTANCE BETWEEN STATION LINE AND BEAM 1 2.750 L

		BEAM SPAC. (C.L. BENT)	BEAM ANGLE D M S
SPAN 7	BEAM 1	0.000	87 22 4
	BEAM 2	7.333	87 21 54
	BEAM 3	7.333	87 21 44
	BEAM 4	7.333	87 21 34
	TOTAL	22.000	

BENT NO. 8 (S 89 27 14.30 W)
DISTANCE BETWEEN STATION LINE AND BEAM 1 2.000 L

		BEAM SPAC. (C.L. BENT)	BEAM ANGLE D M S
SPAN 7	BEAM 1	0.000	88 47 34
	BEAM 2	7.333	88 47 44
	BEAM 3	7.333	88 47 54
	BEAM 4	7.333	88 48 4
	TOTAL	22.000	

BENT NO. 8 (S 89 27 14.30 W)
DISTANCE BETWEEN STATION LINE AND BEAM 1 2.000 L

		BEAM SPAC. (C.L. BENT)	BEAM ANGLE D M S
SPAN 8	BEAM 1	0.000	90 0 0
	BEAM 2	7.333	90 0 0
	BEAM 3	7.333	90 0 0
	BEAM 4	7.333	90 0 0
	TOTAL	22.000	

ABUT NO. 9 (S 89 27 14.30 W)
DISTANCE BETWEEN STATION LINE AND BEAM 1 2.000 L

		BEAM SPAC. (C.L. BENT)	BEAM ANGLE D M S
SPAN 8	BEAM 1	0.000	90 0 0
	BEAM 2	7.333	90 0 0
	BEAM 3	7.333	90 0 0
	BEAM 4	7.333	90 0 0
	TOTAL	22.000	

BEAM REPORT

BEAM REPORT, SPAN 6

	HORIZONTAL DISTANCE C-C BENT	C-C BRG.	TRUE DISTANCE BOT. BM. FLG. ②	BEAM SLOPE
BEAM 1	127.163	125.163	126.74	-0.0344
BEAM 2	126.553	124.553	126.13	-0.0346
BEAM 3	125.942	123.942	125.52	-0.0348
BEAM 4	125.332	123.332	124.91	-0.0349

BEAM REPORT, SPAN 7

	HORIZONTAL DISTANCE C-C BENT	C-C BRG.	TRUE DISTANCE BOT. BM. FLG. ②	BEAM SLOPE
BEAM 1	127.136	125.136	126.72	-0.0358
BEAM 2	126.645	124.645	126.22	-0.0340
BEAM 3	126.153	124.153	125.72	-0.0323
BEAM 4	125.662	123.662	125.22	-0.0305

BEAM REPORT, SPAN 8

	HORIZONTAL DISTANCE C-C BENT	C-C BRG.	TRUE DISTANCE BOT. BM. FLG. ②	BEAM SLOPE
BEAM 1	127.000	125.000	126.58	-0.0356
BEAM 2	127.000	125.000	126.57	-0.0334
BEAM 3	127.000	125.000	126.56	-0.0312
BEAM 4	127.000	125.000	126.55	-0.0290

STATE OF TEXAS
NESTOR R. RUBIANO
94294
LICENSED
PROFESSIONAL ENGINEER

7/06/2012

HL 93 LOADING

PESC P.E. Structural Consultants, Inc.
www.PEStructural.com
TBPE Firm No. F-1475

Texas Department of Transportation
© 2012

IH 35W FROM NORTH TARRANT PKWY TO IH 820

GIRDER LAYOUT (SPANS 6-8)

NB IH 35W ML TO WB US 287

SCALE: NTS SHEET 1 OF 1

DESIGN	FED. RD. DIV. NO.	FEDERAL AID PROJECT NO.		HIGHWAY NO.
AEB	6	(SEE TITLE SHEET)		IH 35W
GRAPHICS TLS	STATE	DISTRICT	COUNTY	SHEET NO.
CHECK NRR	TEXAS	FTW	TARRANT	1477
CHECK AB	CONTROL	SECTION	JOB	
	0014	16	255, ETC.	

DRAWING DATE: 7/13/2012 FILENAME: S3BBR*MLN-287W*GF*02.dgn

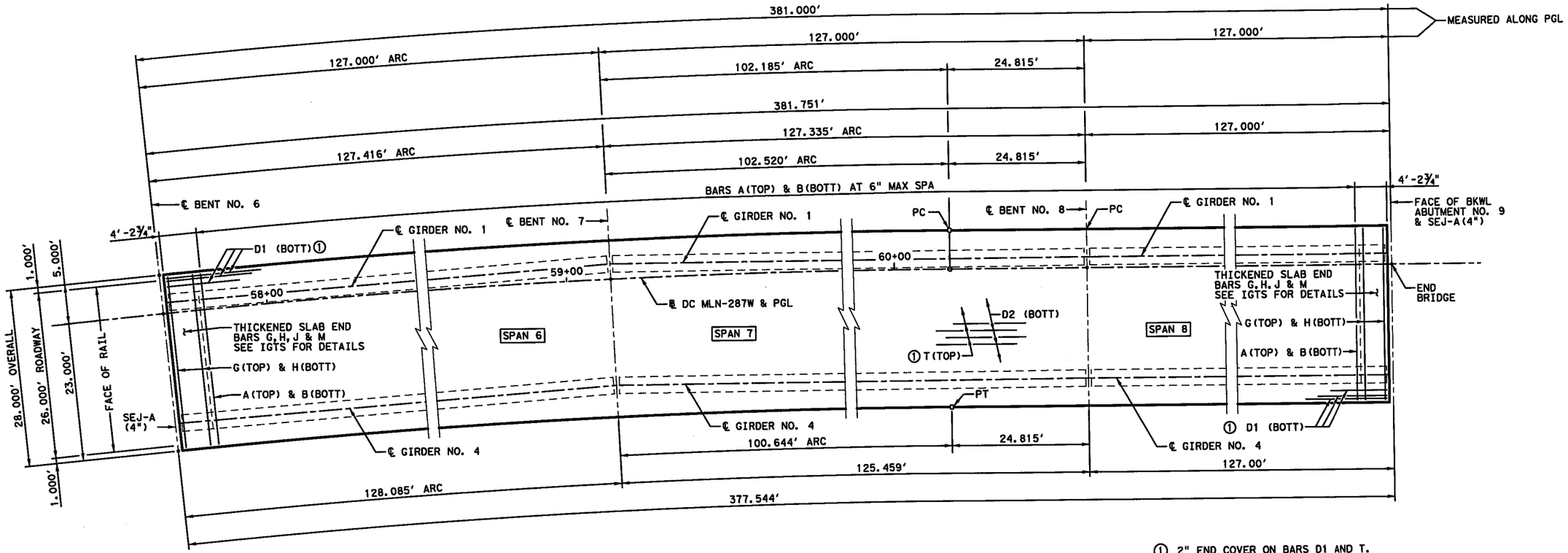

① 2" END COVER ON BARS D1 AND T.

PLAN

STATE OF TEXAS
NESTOR R. RUBIANO
94294
LICENSED PROFESSIONAL ENGINEER

7/06/2012

HL 93 LOADING

PESC P.E. Structural Consultants, Inc.
www.PEStructural.com
TBPE Firm No. F-1475

Texas Department of Transportation
© 2012

IH 35W FROM NORTH TARRANT PKWY TO IH 820

381.00' PRESTRESSED CONCRETE I-GIRDER UNIT

NB IH 35W ML TO WB US 287

SCALE: NTS

SHEET 1 OF 2

DESIGN	FED. RD. DIV. NO.	FEDERAL AID PROJECT NO.		HIGHWAY NO.
AEB	6	(SEE TITLE SHEET)		IH 35W
GRAPHICS TLS	STATE	DISTRICT	COUNTY	SHEET NO.
CHECK NRR	TEXAS	FTW	TARRANT	1478
CHECK AB	CONTROL	SECTION	JOB	
	0014	16	255, ETC.	

DRAWING DATE: 7/13/2012 FILENAME: S38BR#MLN-287W#PB#03.dgn

SPAN NO.	GIRDER NO.	"A" FT	"B" FT
6	1	0.185	0.263
	2	0.181	0.257
	3	0.177	0.252
	4	0.145	0.206
7	1	0.183	0.260
	2	0.181	0.258
	3	0.179	0.254
	4	0.149	0.211
8	1	0.168	0.239
	2	0.185	0.263
	3	0.187	0.266
	4	0.174	0.248

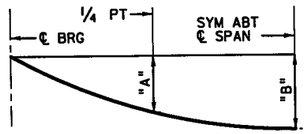

DEAD LOAD DEFLECTION DIAGRAM

CALCULATED DEFLECTIONS SHOWN ARE DUE TO THE CONCRETE SLAB ON INTERIOR GIRDERS ONLY (EC = 5000 KSI). ADJUST VALUES AS REQUIRED FOR EXTERIOR GIRDERS AND IF OPTIONAL SLAB FORMING IS USED. THESE VALUES MAY REQUIRE FIELD VERIFICATION.

TABLE OF SECTION DEPTHS

SPAN NO.	GIRDER NO.	"X" AT ℄ BRG	"Y" AT ℄ BRG	② AT ℄ SPAN
6	1	1'-2 1/2"	5'-8 1/2"	10 1/4"
	2 & 3	1'-2 1/2"	5'-8 1/2"	10 1/8"
	4	1'-2 1/2"	5'-8 1/2"	9 3/4"
7	1	1'-3 3/4"	5'-9 3/4"	11 1/2"
	2	1'-3 3/4"	5'-9 3/4"	11"
	3	1'-3 3/4"	5'-9 3/4"	10 3/8"
	4	1'-3 3/4"	5'-9 3/4"	9 5/8"
8	1	1'-1"	5'-7"	9 1/8"
	2	1'-1"	5'-7"	9 1/2"
	3	1'-1"	5'-7"	9 3/4"
	4	1'-1"	5'-7"	10"

② THEORETICAL DIMENSION

BAR TABLE

BAR	SIZE
A	#5
B	#5
D	#5
G	#5
H	#5
J	#5
M	#5
T	#4

TABLE OF ESTIMATED QUANTITIES

SPAN	REINF CONC SLAB	PRESTR CONC I-GIRDERS (TX54) ③	CL S CONC (HPC)	REINFORCING STEEL ④
NO.	SF	LF	CY	LB
6	3,535	503.30	106.8	22,978
7	3,539	503.88	110.7	23,004
8	3,556	506.26	103.8	23,114
TOTAL	10,630	1,513.44	321.3	69,096

③ REINFORCING STEEL WEIGHT IS CALCULATED USING AN APPROXIMATE FACTOR OF 6.5 LBS PER SQ FT.

④ LENGTHS SHOWN ARE BOTTOM OF GIRDER FLANGE LENGTHS WITH ADJUSTMENTS MADE FOR BEAM SLOPE. SEE GIRDER LAYOUT FOR GIRDER LENGTHS.

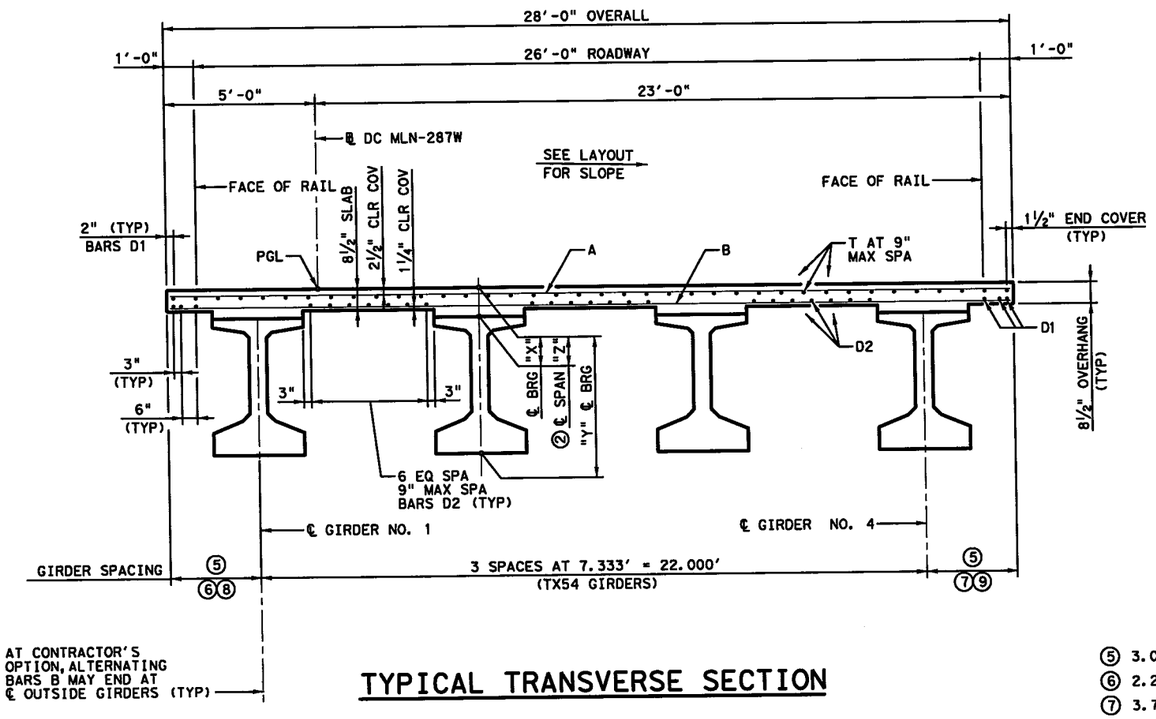

TYPICAL TRANSVERSE SECTION

⑤ 3.000' AT ℄ BENTS NO. 5, 6, & 8 AND ABUT NO. 9
⑥ 2.250' AT ℄ BENT NO. 7
⑦ 3.750' AT ℄ BENT NO. 7
⑧ SPAN 6 ~ 3.976' MAX
SPAN 7 ~ 3.862' MAX
⑨ SPAN 6 ~ 2.043' MIN
SPAN 7 ~ 2.151' MIN

GENERAL NOTES:

1. DESIGNED ACCORDING TO AASHTO LRFD BRIDGE DESIGN SPECIFICATIONS, 5TH EDITION (2010).
2. CLASS "S"(HPC) CONCRETE STRENGTH F'C = 4,000 PSI.
3. ALL REINFORCING SHALL BE GRADE 60 AND EPOXY COATED.
4. SEE PCP OR PMDF STANDARDS FOR DETAILS AND QUANTITY ADJUSTMENTS IF EITHER OF THESE OPTIONS ARE USED.
5. SEE IGTS STANDARD FOR THICKENED SLAB END DETAILS.
6. SEE IGMS STANDARD FOR MISCELLANEOUS SLAB DETAILS.
7. SEE RAIL STANDARD FOR RAIL ANCHORAGE IN SLAB.
8. BAR LAPS, WHERE REQUIRED, TO BE AS FOLLOWS:
   #4 = 2'-1"
   #5 = 2'-7"

STATE OF TEXAS
NESTOR R. RUBIANO
94294
LICENSED PROFESSIONAL ENGINEER
7/06/2012

HL 93 LOADING

PESC P.E. Structural Consultants, Inc.
www.PEStructural.com
TBPE Firm No. F-1475

Texas Department of Transportation
© 2012

IH 35W FROM NORTH TARRANT PKWY TO IH 820

381.00' PRESTRESSED CONCRETE I-GIRDER UNIT

NB IH 35W ML TO WB US 287

SCALE: NTS — SHEET 2 OF 2

DESIGN	FED.RD. DIV.NO.	FEDERAL AID PROJECT NO.		HIGHWAY NO.
AEB	6	(SEE TITLE SHEET)		IH 35W
GRAPHICS TLS	STATE	DISTRICT	COUNTY	SHEET NO.
CHECK NRR	TEXAS	FTW	TARRANT	1479
CHECK AB	CONTROL	SECTION	JOB	
	0014	16	255, ETC.	

DRAWING DATE: 7/13/2012 FILENAME: S3BBR*MLN-287W*PB*04.dgn

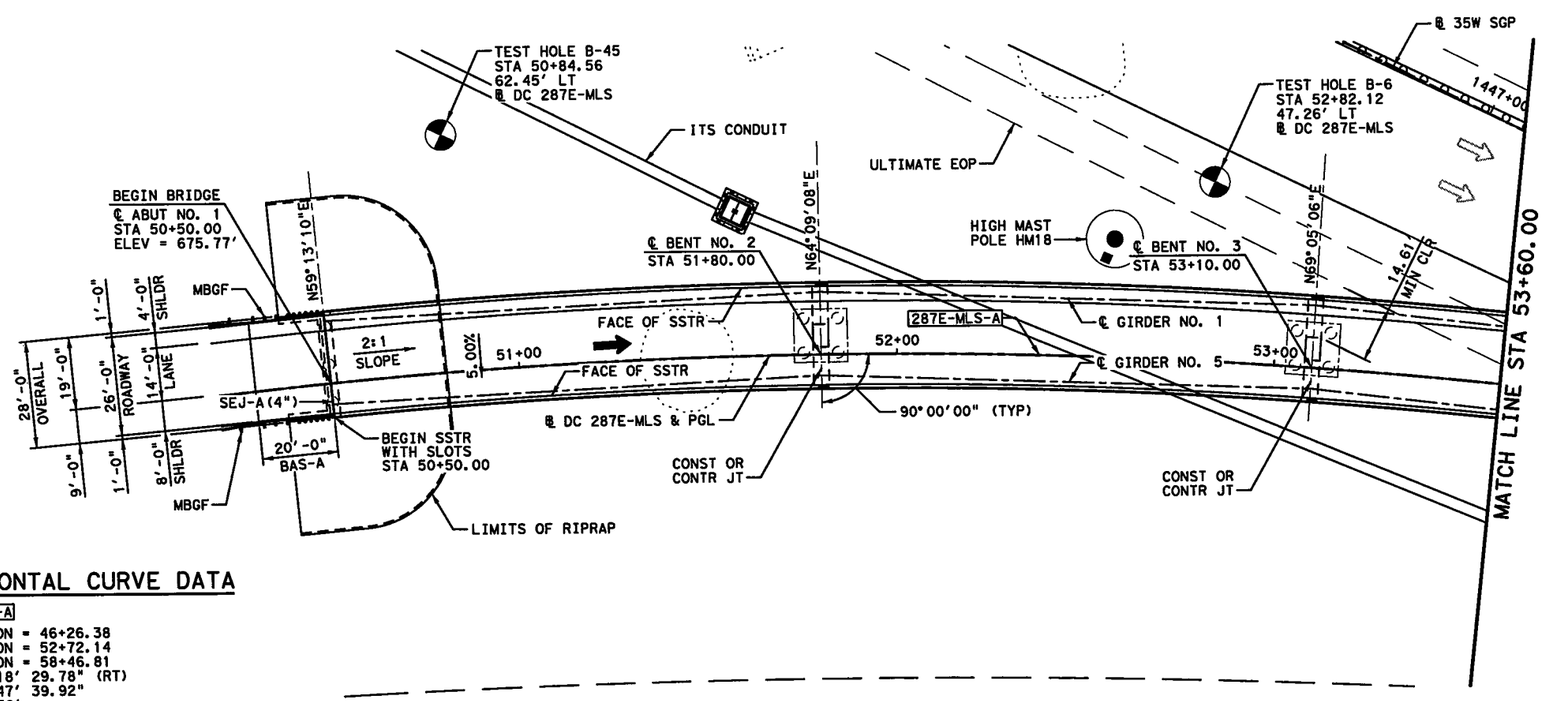

HORIZONTAL CURVE DATA

287E-MLS-A

PC STATION = 46+26.38
PI STATION = 52+72.14
PT STATION = 58+46.81
Δ = 46° 18' 29.78" (RT)
D = 3° 47' 39.92"
T = 645.76'
L = 1,220.43'
R = 1,510.00'

PLAN

0' 10' 20' 40'
SCALE IN FEET

GENERAL NOTES:

1. DESIGNED ACCORDING TO AASHTO LRFD BRIDGE DESIGN SPECIFICATIONS, 5TH EDITION (2010).
2. ALL DIMENSIONS ARE EITHER HORIZONTAL OR VERTICAL AND MUST BE CORRECTED FOR GRADE, CROWN, AND/OR SUPERELEVATION.
3. FOR CONCRETE GIRDER UNITS, "D"DENOTES BENTS WITH DOWEL BARS "D"AND SLOTTED HOLES AT THE ENDS OF EXTERIOR GIRDERS ONLY.
4. FOR STEEL GIRDER UNITS, BEAM END CONDITIONS ARE DENOTED AS FOLLOWS:
   (F) FIXED BEARING
   (E) EXPANSION BEARING
   (ES) EXPANSION BEARING (SLIDING)
5. SEE "BORING LOGS - BRIDGE" SHEETS FOR GEOTECHNICAL INFORMATION.
6. CONTRACTOR TO VERIFY LOCATION OF ALL UTILITIES PRIOR TO EXCAVATION.
7. THE "H" VALUES SHOWN ARE ESTIMATED COLUMN HEIGHTS. CONTRACTOR IS RESPONSIBLE FOR CALCULATING ACTUAL COLUMN HEIGHTS BASED ON FIELD CONDITIONS.
8. SEE ILLUMINATION PLANS AND RELATED SUMMARY SHEETS FOR UNDERPASS LIGHT LOCATIONS, JUNCTION BOXES, FUSED DISCONNECT SWITCHES AND CONDUIT DETAILS AND QUANTITIES.
9. SIDE SLOT DRAINS FOR SSTR RAIL SHALL NOT BE LOCATED WITHIN 6' OF CL BENT OR ABUTMENT.
10. ALLOWANCE FOR FUTURE RESURFACING: 23.3 PSF.

NBI NUMBER: 02-220-0-0014-16-545
FUNCTIONAL CLASSIFICATION: URBAN FREEWAY
DESIGN SPEED: 45 MPH
ADT: 7,500 (2030)

HL 93 LOADING

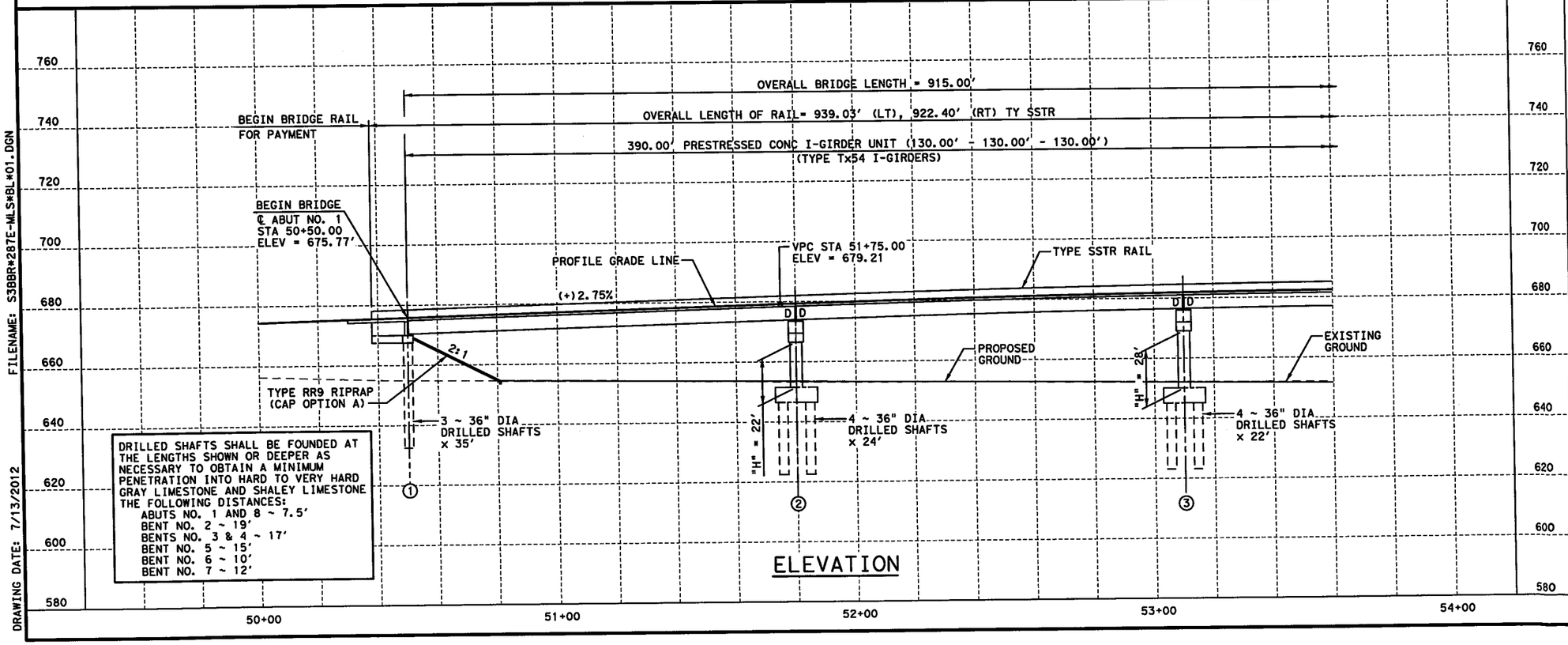

ELEVATION

FILENAME: S3BBR*287E-ML*BL*01.DGN
DRAWING DATE: 7/13/2012

STATE OF TEXAS
NESTOR R. RUBIANO
94294
LICENSED
PROFESSIONAL ENGINEER
7/06/2012

P.E. Structural Consultants, Inc.
www.PEStructural.com
TBPE Firm No. F-1475

Texas Department of Transportation
© 2012

IH 35W FROM NORTH TARRANT PKWY TO IH 820

BRIDGE LAYOUT

EB US 287 TO SB IH 35W ML

SCALE: 1"=40'

SHEET 1 OF 3

DESIGN	FED. RD. DIV. NO.	FEDERAL AID PROJECT NO.		HIGHWAY NO.
AEB	6	(SEE TITLE SHEET)		IH 35W
GRAPHICS TLS	STATE	DISTRICT	COUNTY	SHEET NO.
CHECK NRR	TEXAS	FTW	TARRANT	1480
CHECK AB	CONTROL	SECTION	JOB	
	0014	16	255, ETC.	

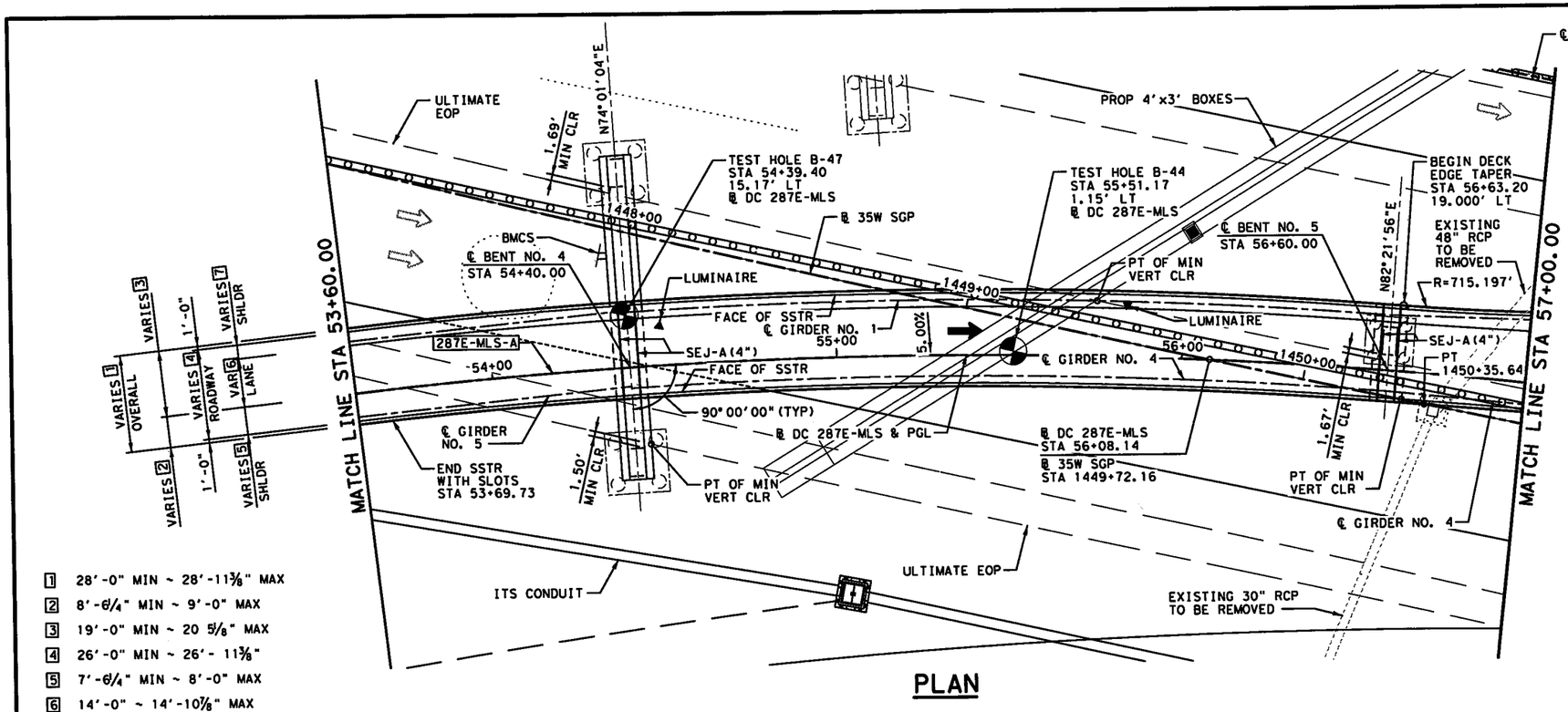

PLAN

1 28'-0" MIN ~ 28'-11⅜" MAX
2 8'-6¼" MIN ~ 9'-0" MAX
3 19'-0" MIN ~ 20 5/8" MAX
4 26'-0" MIN ~ 26'- 11⅜"
5 7'-6¼" MIN ~ 8'-0" MAX
6 14'-0" ~ 14'-10⅞" MAX
7 4'-0" ~ 4'-6¼" MAX

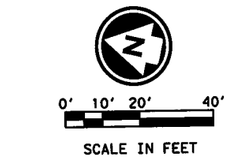

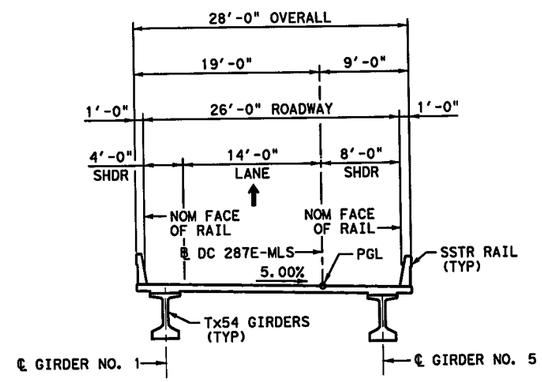

TYPICAL SECTION
(SPANS 1-3) (NTS)

HL 93 LOADING

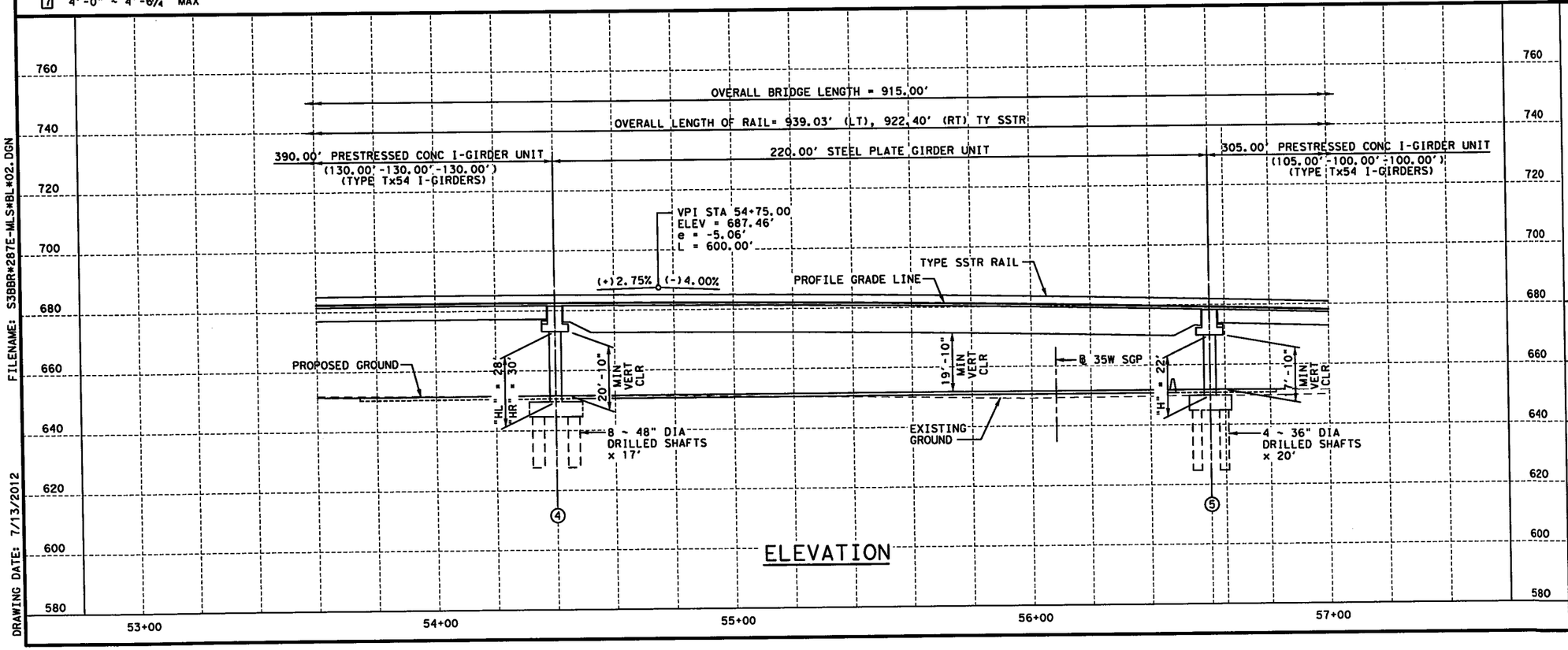

ELEVATION

STATE OF TEXAS
NESTOR R. RUBIANO
94294
LICENSED PROFESSIONAL ENGINEER
7/06/2012

PESC P.E. Structural Consultants, Inc.
www.PEStructural.com
TBPE Firm No. F-1475

Texas Department of Transportation
© 2012

IH 35W FROM NORTH TARRANT PKWY TO IH 820

BRIDGE LAYOUT

EB US 287 TO SB IH 35W ML

SCALE: 1"=40' SHEET 2 OF 3

DESIGN	FED.RD. DIV. NO.	FEDERAL AID PROJECT NO.		HIGHWAY NO.
AEB	6	(SEE TITLE SHEET)		IH 35W
GRAPHICS TLS	STATE	DISTRICT	COUNTY	SHEET NO.
CHECK NRR	TEXAS	FTW	TARRANT	1481
CHECK AB	CONTROL	SECTION	JOB	
	0014	16	255, ETC.	

FILENAME: S3BBR*287E-MLS*BL*02.DGN
DRAWING DATE: 7/13/2012

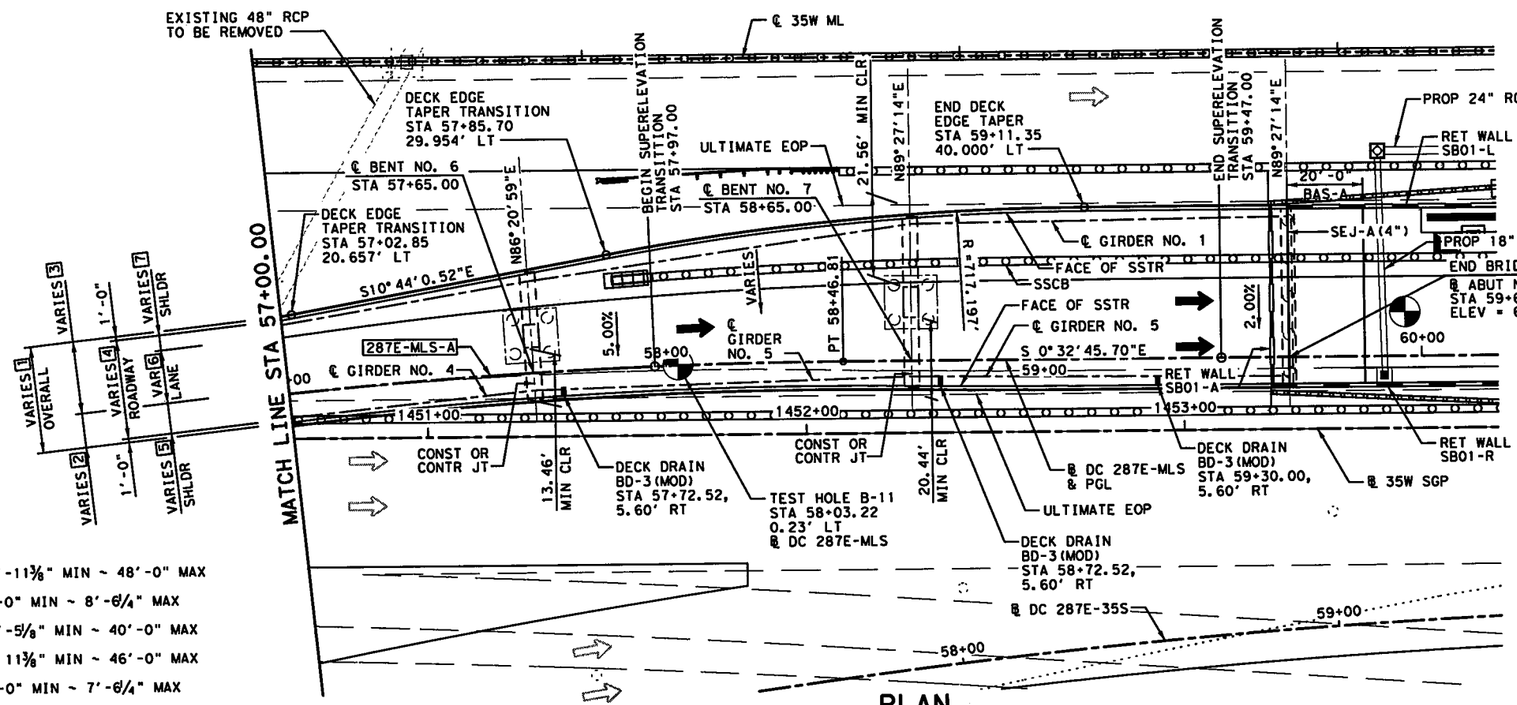

PLAN

1. 28'-11⅜" MIN ~ 48'-0" MAX
2. 8'-0" MIN ~ 8'-6¼" MAX
3. 20'-5⅛" MIN ~ 40'-0" MAX
4. 26 11⅜" MIN ~ 46'-0" MAX
5. 4'-0" MIN ~ 7'-6¼" MAX
6. 14'-10⅞" MIN ~ 24'-0" MAX (2 LANES)
7. 4'-6¼" MIN ~ 18'-0" MAX

SCALE IN FEET 0' 10' 20' 40'

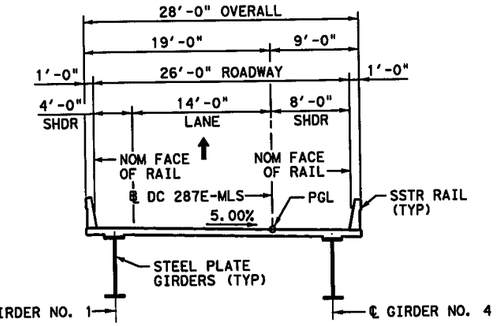

TYPICAL SECTION
(SPAN 4) (NTS)

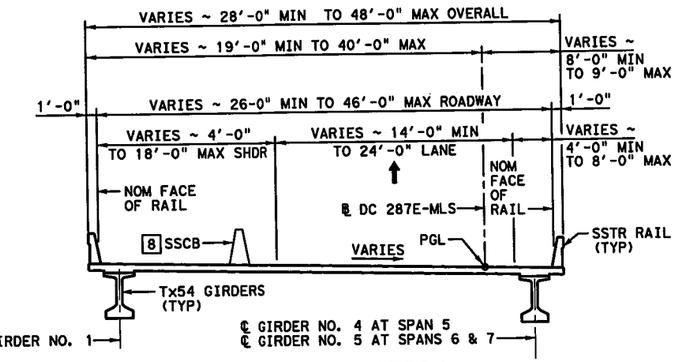

8 SPANS 6 AND 7 ONLY

TYPICAL SECTION
(SPANS 5-7) (NTS)

HL 93 LOADING

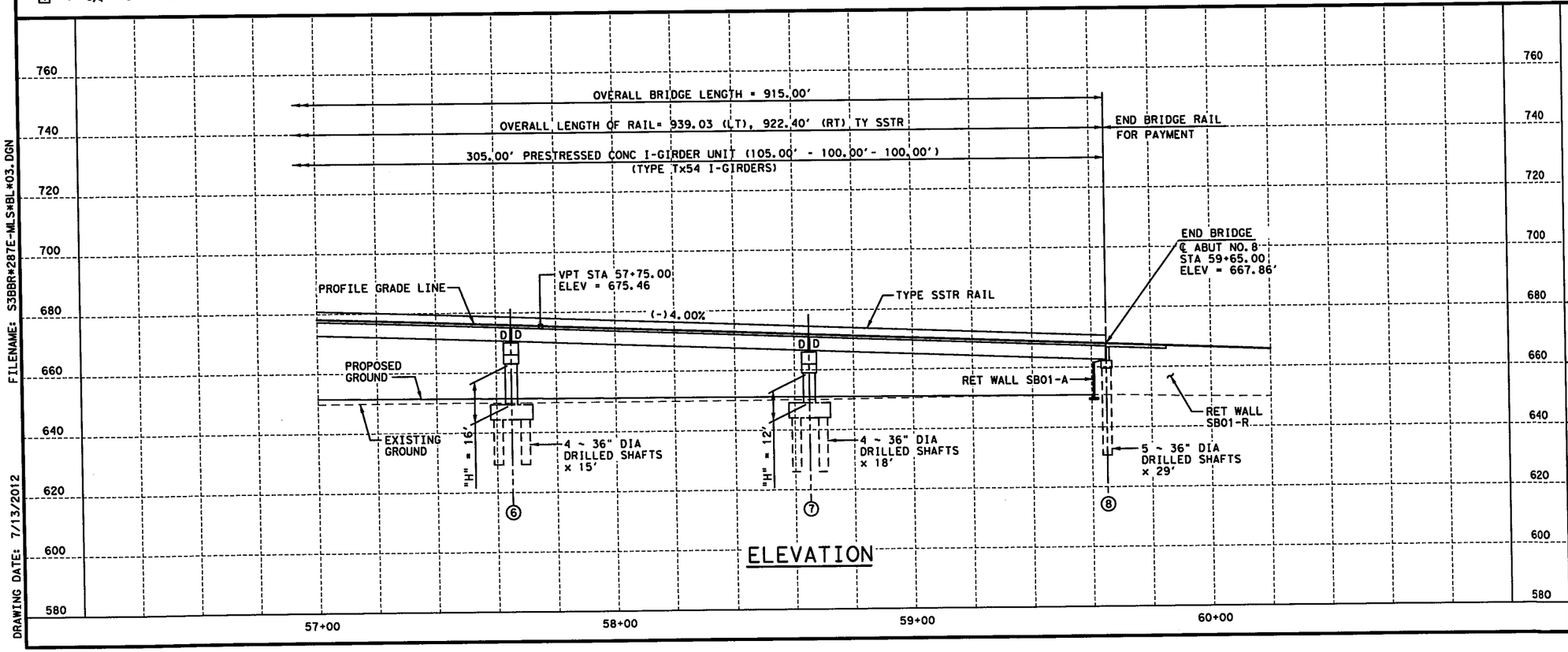

ELEVATION

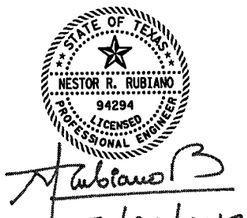

P.E. Structural Consultants, Inc.
www.PEStructural.com
TBPE Firm No. F-1475

Texas Department of Transportation
© 2012

IH 35W FROM NORTH TARRANT PKWY TO IH 820

BRIDGE LAYOUT

EB US 287 TO SB IH 35W ML

SCALE: 1"=40' SHEET 3 OF 3

DESIGN	FED.RD. DIV. NO.	FEDERAL AID PROJECT NO.		HIGHWAY NO.
AEB	6	(SEE TITLE SHEET)		IH 35W
GRAPHICS TLS	STATE	DISTRICT	COUNTY	SHEET NO.
CHECK NRR	TEXAS	FTW	TARRANT	1482
CHECK AB	CONTROL	SECTION	JOB	
	0014	16	255, ETC.	

FILENAME: S3BBR*287E-MLS*BL*03.DGN
DRAWING DATE: 7/13/2012

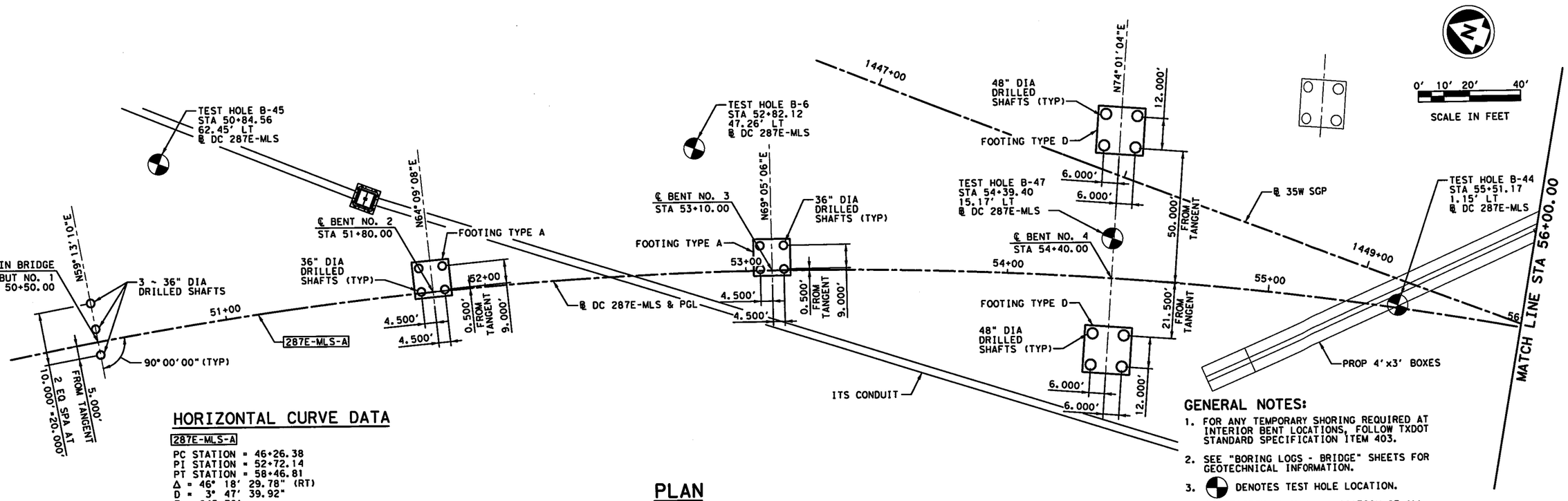

PLAN

HORIZONTAL CURVE DATA

287E-MLS-A

PC STATION = 46+26.38
PI STATION = 52+72.14
PT STATION = 58+46.81
Δ = 46° 18' 29.78" (RT)
D = 3° 47' 39.92"
T = 645.76'
L = 1,220.43'
R = 1,510.00'

GENERAL NOTES:

1. FOR ANY TEMPORARY SHORING REQUIRED AT INTERIOR BENT LOCATIONS, FOLLOW TXDOT STANDARD SPECIFICATION ITEM 403.
2. SEE "BORING LOGS - BRIDGE" SHEETS FOR GEOTECHNICAL INFORMATION.
3. ⊕ DENOTES TEST HOLE LOCATION.
4. CONTRACTOR TO VERIFY LOCATION OF ALL UTILITIES PRIOR TO EXCAVATION.

HL 93 LOADING

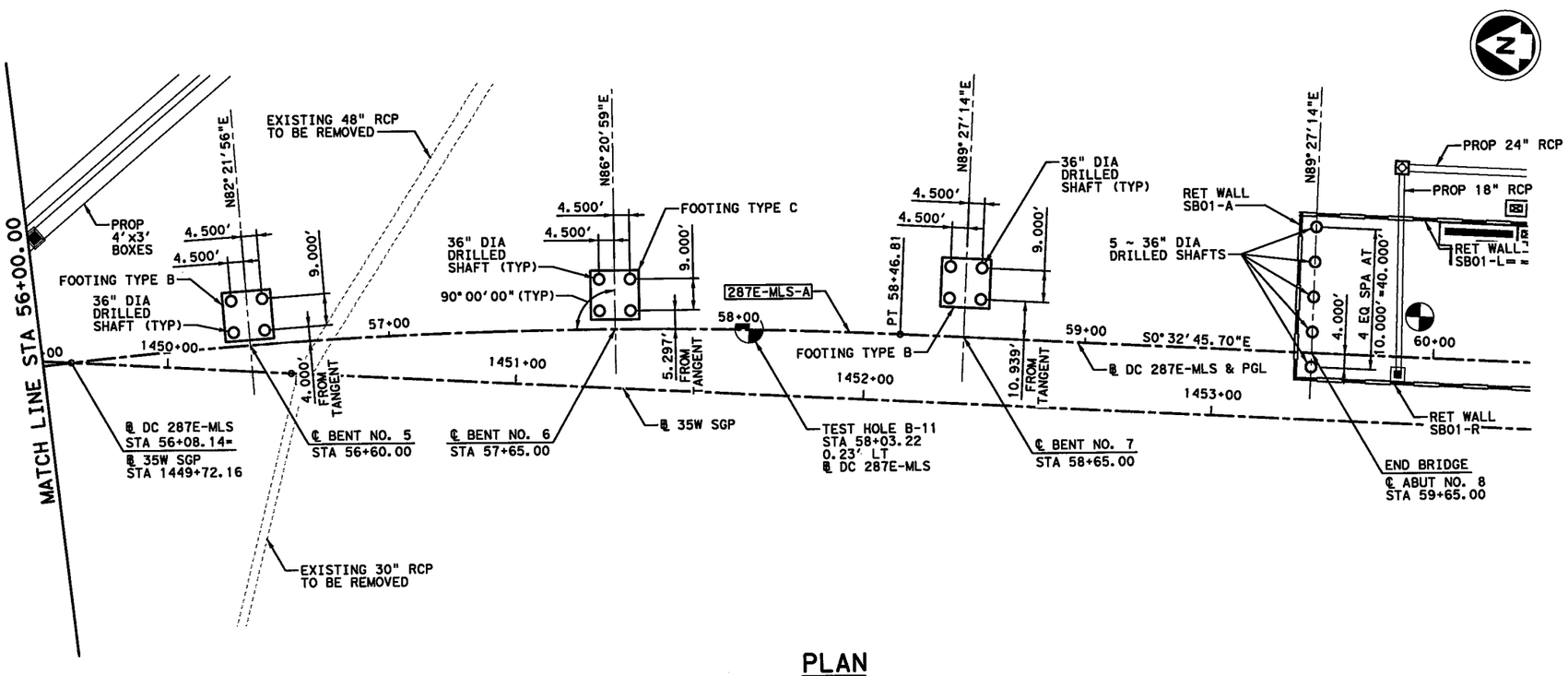

PLAN

STATE OF TEXAS
NESTOR R. RUBIANO
94294
LICENSED
PROFESSIONAL ENGINEER
7/06/2012

PESC
P.E. Structural Consultants, Inc.
www.PEStructural.com
TBPE Firm No. F-1475

Texas Department of Transportation
© 2012

IH 35W FROM NORTH TARRANT PKWY TO IH 820

FOUNDATION LAYOUT

EB US 287 TO SB IH 35W ML

SCALE: 1"=40'

SHEET 1 OF 1

DESIGN	FED. RD. DIV. NO.	FEDERAL AID PROJECT NO.		HIGHWAY NO.
AEB	6	(SEE TITLE SHEET)		IH 35W
GRAPHICS	STATE	DISTRICT	COUNTY	SHEET NO.
TLS	TEXAS	FTW	TARRANT	1483
CHECK	CONTROL	SECTION	JOB	
NRR	0014	16	255, ETC.	
CHECK				
AB				

FILENAME: S3BBR#287E-MLS#FL#01.DGN

DRAWING DATE: 7/13/2012

SUMMARY OF ESTIMATED QUANTITIES

BID ITEM	403 2001	416 2004	416 2006	420 2018	420 2041	420 2042	420 2093	420 2256	420	420 2269	422 2003	425 2068	428 2002
BID ITEM DESCRIPTION / BRIDGE ELEMENT	TEMPORARY SPL SHORING	DRILL SHAFT (36 IN)	DRILL SHAFT (48 IN)	CL C CONC (MASS PLACEMENT) (FOOTING)	CL C CONC (HPC) (ABUT)	CL C CONC (HPC) (BENT)	CL C CONC (MASS PLACE) (HPC) (COLUMN)	CL S CONC (HPC) (APPR SLAB)	CL F CONC (HPC) (MASS PLACEMENT) (BENT)	CL C CONC (HPC) (CAP)	REINF CONC SLAB (HPC) (CL S)	PRESTR CONC GIRDER (TX54)	CONC SURF TREAT (CLASS II)
	SF	LF	LF	CY	CY	CY	CY	CY	CY		SF	LF	SY
2 - ABUTMENTS		250			46.6			58					192
6 - INTERIOR BENTS	3,886	396	136	296.5		125.2	14.2		375.7	36.1			509
1 - 390.000' PRESTRESSED CONCRETE I-GIRDER UNIT (SPANS 1-3)											10,956	1,937.07	1,378
1 - 220.000' STEEL PLATE GIRDER UNIT (SPAN 4)											6,180		777
1 - 305.000' PRESTRESSED CONCRETE I-GIRDER UNIT (SPANS 5-7)											12,080	1,411.29	1,602
TOTALS	3,886	646	136	296.5	46.6	125.2	14.2	58	375.7	36.1	29,216	3,348.36	4,458

SUMMARY OF ESTIMATED QUANTITIES

BID ITEM	432 2001	434 2050	434 2053	434 2058	434 2061	442 2002	442 2048	450 2102	454 2001	471 2003	481 2012	514 2066	545 2001	636 2001
BID ITEM DESCRIPTION / BRIDGE ELEMENT	RIPRAP (CONC) (4 IN)	ELASTOMERIC BEAR (EE6)	ELASTOMERIC BEAR (EE9)	ELASTOMERIC BEAR (EF6)	ELASTOMERIC BEAR (EF9)	STR STL (PLATE GIRDER)	STRUCTURAL STEEL (MISC NON - BRIDGE)	RAIL (TYPE SSTR) (HPC)	SEALED EXPANSION JOINT (4 IN) (SEJ-A)	GRATE & FRAME	PVC PIPE (SCH 40) (6 IN)	PRM CON TRF BAR (SG SLP) (TY 1) (42") (HPC)	CRASH CUSH ATTEN (INSTL)	ALUMINUM SIGNS (TY A)
	CY	EA	EA	EA	EA	LB	LB	LF	LF	EA	LF	LF	EA	SF
2 - ABUTMENTS	79							24.0	74					
6 - INTERIOR BENTS									108					
1 - 390.000' PRESTRESSED CONCRETE I-GIRDER UNIT (SPANS 1-3)								782.6						
1 - 220.000' STEEL PLATE GIRDER UNIT (SPAN 4)		3	1	3	1	506,900	209	441.5						14
1 - 305.000' PRESTRESSED CONCRETE I-GIRDER UNIT (SPANS 5-7)								613.4		3	150	168	1	
TOTALS	79	3	1	3	1	506,900	209	1,861.5	182	3	150	168	1	14

BEARING SEAT ELEVATIONS

		BEAM 1	BEAM 2	BEAM 3	BEAM 4	BEAM 5
BENT 1	(FWD)	670.685	670.410	670.136	669.861	669.586
BENT 2	(BK)	674.205	673.930	673.655	673.380	673.105
	(FWD)	674.487	674.212	673.938	673.663	673.388
BENT 3	(BK)	677.000	676.725	676.450	676.175	675.900
	(FWD)	677.003	676.728	676.453	676.178	675.903
BENT 4	(BK)	677.644	677.369	677.094	676.819	676.544
	(FWD)	676.839	676.514	676.168	675.802	
BENT 5	(BK)	673.710	673.385	673.040	672.674	
	(FWD)	674.282	673.911	673.540	673.170	
BENT 6	(BK)	671.348	670.870	670.392	669.914	
	(FWD)	671.177	670.816	670.455	670.094	669.733
BENT 7	(BK)	667.361	666.995	666.630	666.264	665.898
	(FWD)	667.273	666.910	666.546	666.183	665.820
BENT 8	(BK)	662.790	662.580	662.370	662.160	661.950

STATE OF TEXAS
NESTOR R. RUBIANO
94294
LICENSED
PROFESSIONAL ENGINEER

8/29/2012

HL 93 LOADING

PESC P.E. Structural Consultants, Inc.
www.PEStructural.com
TBPE Firm No. F-1475

Texas Department of Transportation
© 2012

IH 35W FROM NORTH TARRANT PKWY TO IH 820

EST. QUANTITIES AND BEARING SEAT ELEV.

EB US 287 TO SB IH 35W ML

SCALE: NTS

SHEET 1 OF 1

DESIGN	FED.RD. DIV.NO.	FEDERAL AID PROJECT NO.		HIGHWAY NO.
AEB	6	(SEE TITLE SHEET)		IH 35W
GRAPHICS: TLS	STATE	DISTRICT	COUNTY	SHEET NO.
CHECK: NRR	TEXAS	FTW	TARRANT	1484
CHECK: AB	CONTROL	SECTION	JOB	
	0014	16	255, ETC.	

FILENAME: S3BBR*287E-MLS*EQ*01.DGN

DRAWING DATE: 7/13/2012

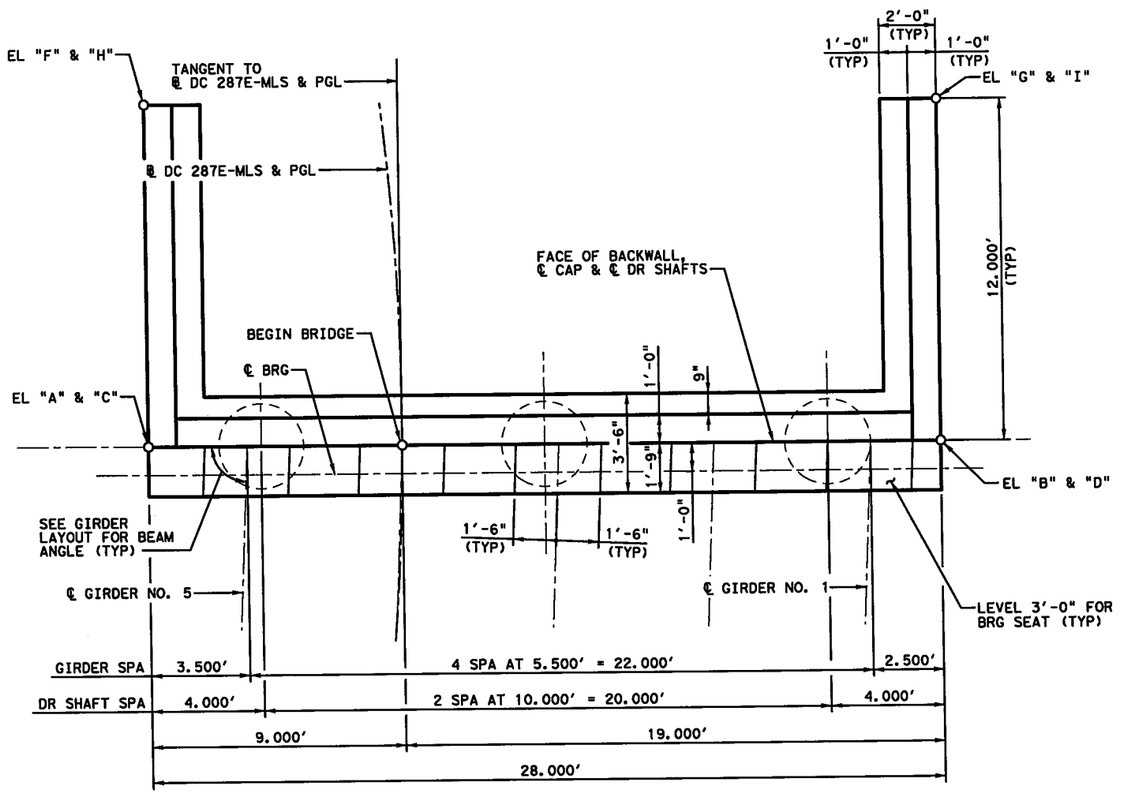

PLAN

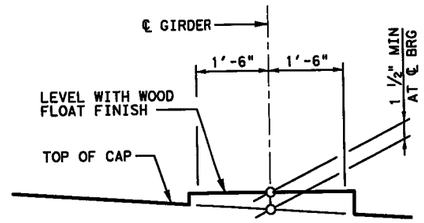

BEARING SEAT DETAIL

(BEARING SURFACE SHALL BE CLEAN AND FREE OF ALL LOOSE MATERIAL BEFORE PLACING BEARING PAD)

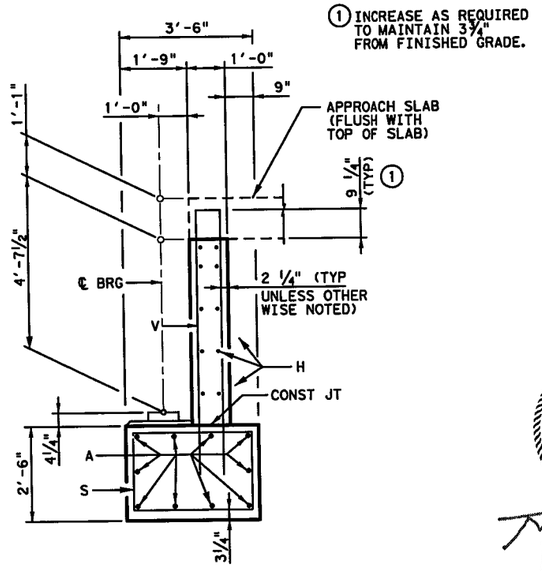

SECTION A-A

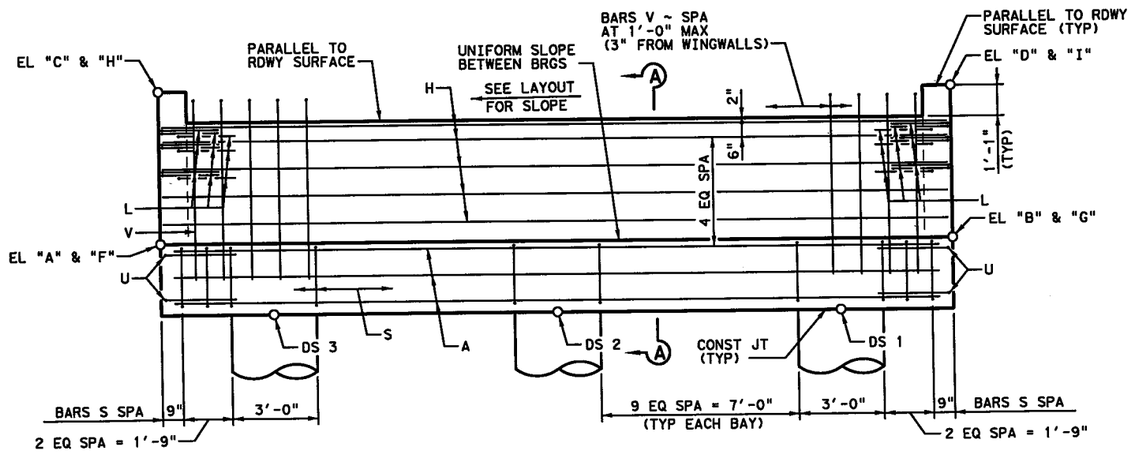

ELEVATION

TABLE OF ELEVATIONS				
CAP	"A"	"B"	"C"	"D"
	669.288	670.687	675.327	676.727
WINGWALLS	"F"	"G"	"H"	"I"
	668.959	670.363	674.998	676.404
TOP OF DS	DS 1	DS 2	DS 3	---
	667.984	667.484	666.985	---
SHAFT TIP	632.984	632.484	631.985	---
AS- BUILT SHAFT TIP				---

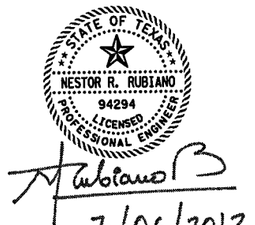

HL 93 LOADING

PESC P.E. Structural Consultants, Inc.
www.PEStructural.com
TBPE Firm No. F-1475

Texas Department of Transportation
© 2012

IH 35W FROM NORTH TARRANT PKWY TO IH 820

ABUTMENT NO. 1

EB US 287 TO SB IH 35W ML

SCALE: NTS — SHEET 1 OF 2

DESIGN	FED. RD. DIV. NO.	FEDERAL AID PROJECT NO.		HIGHWAY NO.
AEB	6	(SEE TITLE SHEET)		IH 35W
GRAPHICS TLS	STATE	DISTRICT	COUNTY	SHEET NO.
CHECK NRR	TEXAS	FTW	TARRANT	1485
CHECK AB	CONTROL	SECTION	JOB	
	0014	16	255, ETC.	

FILENAME: S3BBR#287E-MLS#AB#01.DGN

DRAWING DATE: 7/13/2012

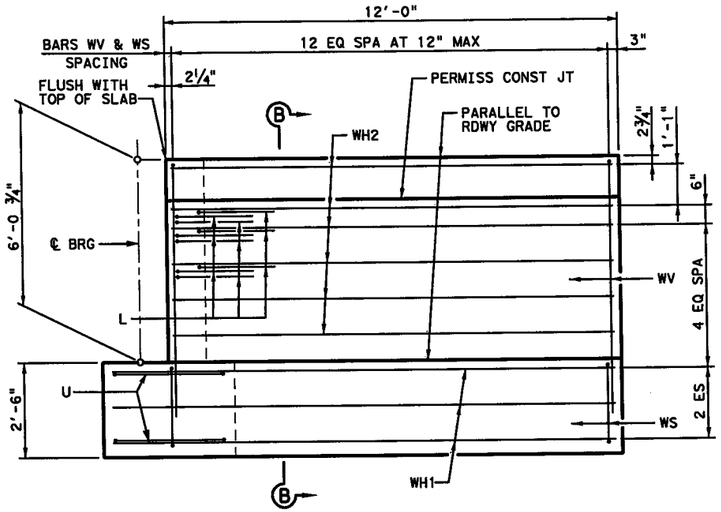

ELEVATION

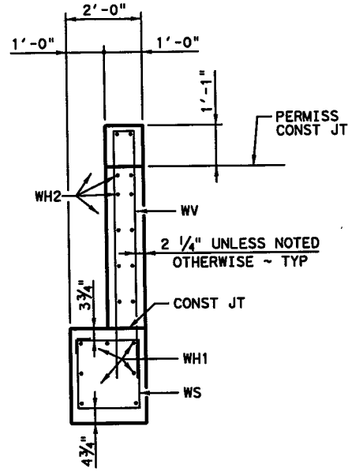

SECTION B-B

THE FRONT AND BACK, BACKWALL FACES, SIDES, AND TOP, EXCEPT UNDER BEARING AREAS, SHALL BE TREATED WITH A "CLASS II, TYPE I PENETRATING CONCRETE SURFACE TREATMENT".

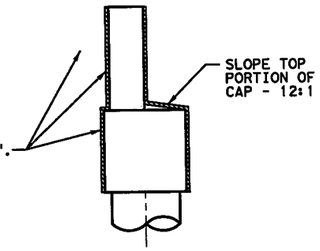

CONCRETE SURFACE TREATMENT DETAIL FOR ABUTMENT

TABLE OF ESTIMATED QUANTITIES

BAR	NO.	SIZE	LENGTH	WEIGHT
A	10	#11	27'-0"	1,435
H	10	#6	27'-8"	416
L	18	#6	4'-0"	108
S	26	#5	11'-4"	307
U	4	#6	8'-0"	48
V	27	#5	14'-8"	413
WH1	14	#6	13'-5"	282
WH2	24	#6	11'-8"	421
WS	26	#4	7'-8"	133
WV	26	#5	14'-11"	405
REINFORCING STEEL			LB	3,968
CL C CONC (HPC) (ABUT)			CY	23.2

WINGWALL DETAILS

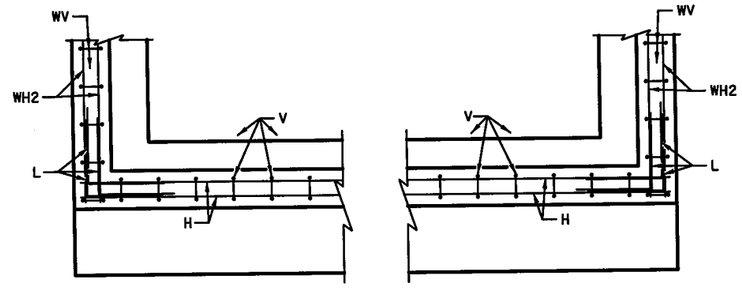

BACKWALL

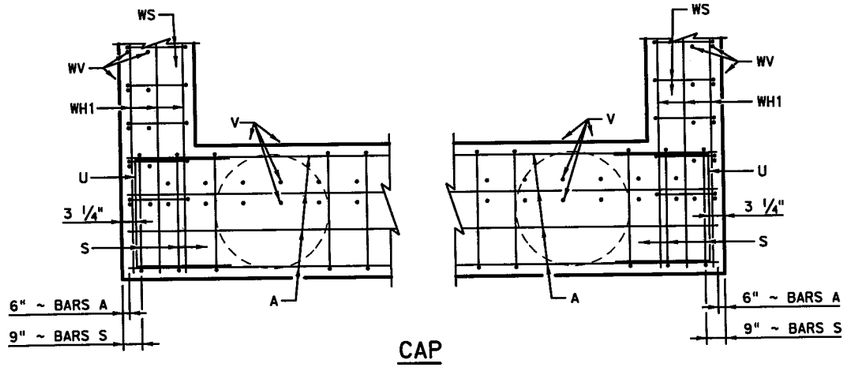

CAP

CORNER DETAILS

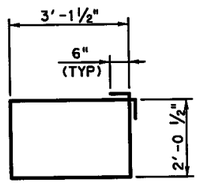

BARS S

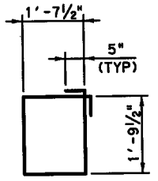

BARS WS

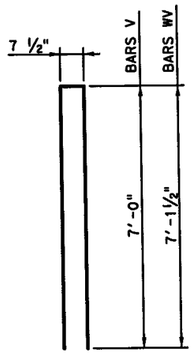

BARS V & WV

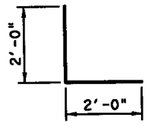

BARS L

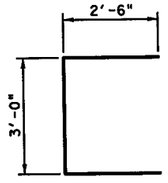

BARS U

GENERAL NOTES:

1. DESIGNED ACCORDING TO AASHTO LRFD BRIDGE DESIGN SPECIFICATIONS, 5TH EDITION (2010).
2. CLASS "C" (HPC) CONCRETE STRENGTH F'C = 3,600 PSI.
3. ALL CAP AND WALL REINFORCING SHALL BE GRADE 60.
4. SEE FD STANDARD FOR ALL FOUNDATION DETAILS AND NOTES.
5. SEE RAIL STANDARD FOR RAIL ANCHORAGE IN WINGWALLS.
6. CALCULATED FOUNDATION LOADS:
   CAP DRILLED SHAFTS = 165 TONS / D.S.

STATE OF TEXAS
NESTOR R. RUBIANO
94294
LICENSED
PROFESSIONAL ENGINEER

7/06/2012

HL 93 LOADING

PESC
P.E. Structural Consultants, Inc.
www.PEStructural.com
TBPE Firm No. F-1475

Texas Department of Transportation
© 2012

IH 35W FROM NORTH TARRANT PKWY TO IH 820

ABUTMENT NO. 1

EB US 287 TO SB IH 35W ML

SCALE: NTS — SHEET 2 OF 2

DESIGN	FED.RD. DIV.NO.	FEDERAL AID PROJECT NO.		HIGHWAY NO.
AEB	6	(SEE TITLE SHEET)		IH 35W
GRAPHICS	STATE	DISTRICT	COUNTY	SHEET NO.
TLS	TEXAS	FTW	TARRANT	1486
CHECK NRR	CONTROL	SECTION	JOB	
CHECK AB	0014	16	255, ETC.	

FILENAME: S3BBR*287E-MLS*AB#02.DGN
DRAWING DATE: 7/13/2012

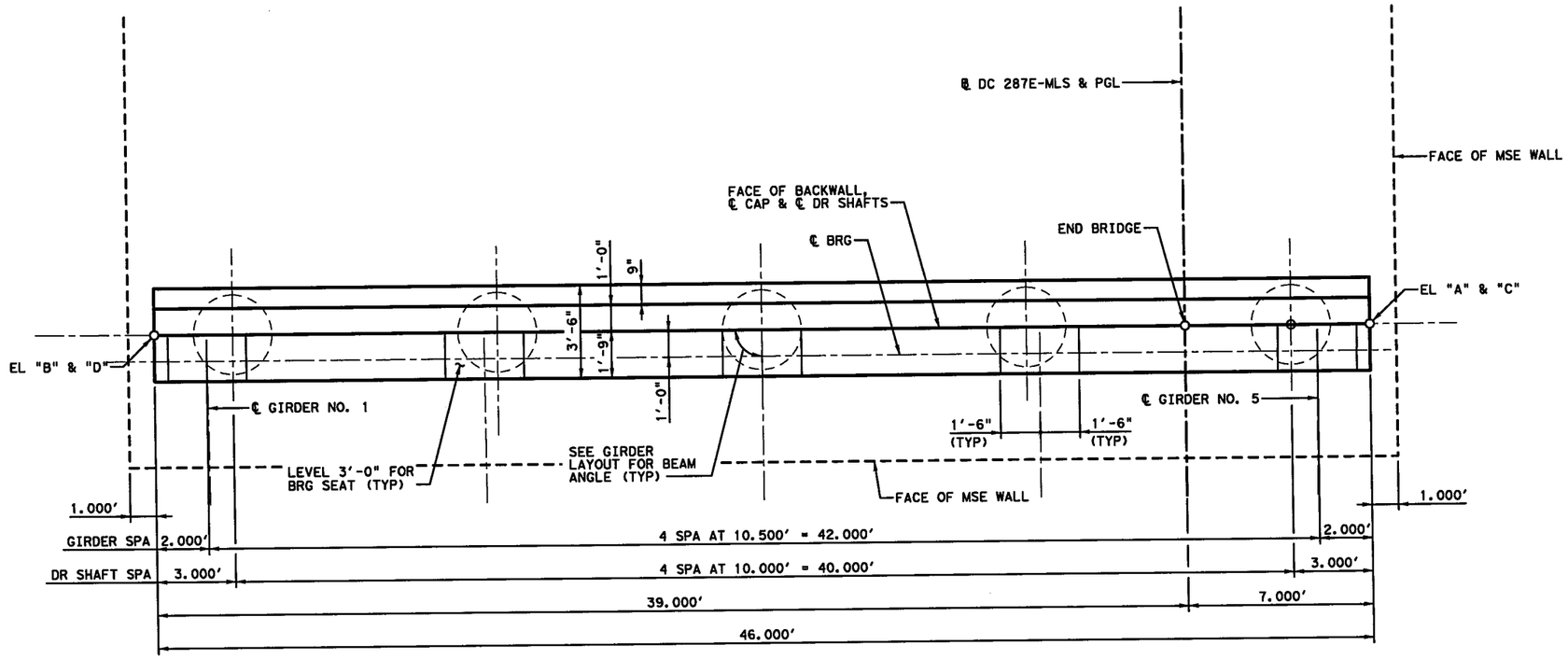

PLAN

TABLE OF ELEVATIONS					
CAP	"A"	"B"	"C"	"D"	---
	661.785	662.705	666.641	667.561	---
TOP OF DS	DS 1	DS 2	DS 3	DS 4	DS 5
	660.145	659.945	659.745	659.544	659.344
SHAFT TIP	631.145	630.945	630.745	630.544	630.344
AS- BUILT SHAFT TIP					

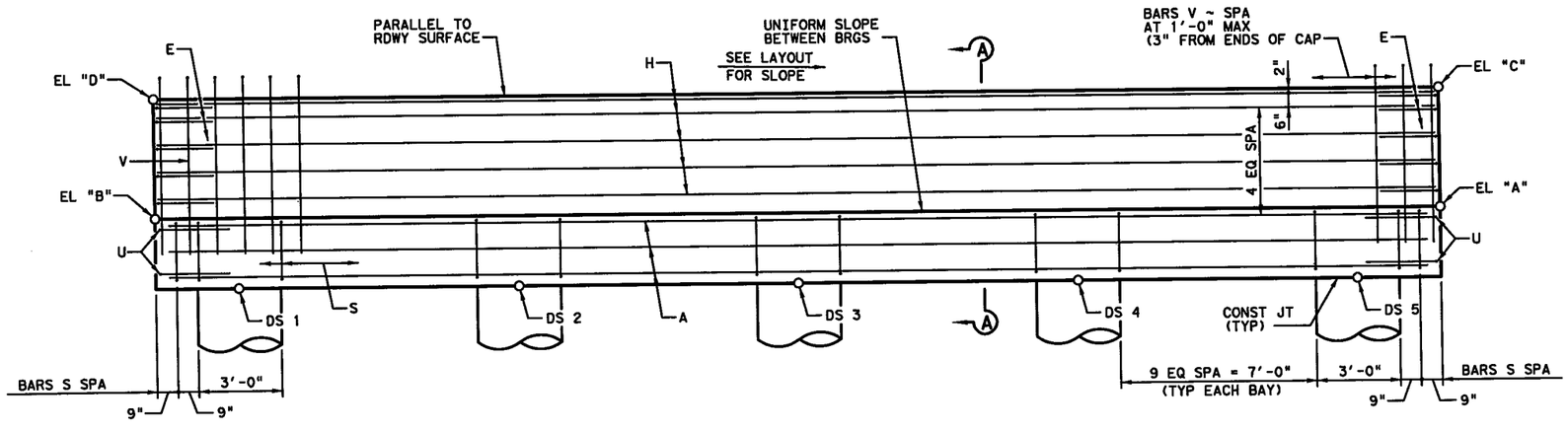

ELEVATION

STATE OF TEXAS
NESTOR R. RUBIANO
94294
LICENSED PROFESSIONAL ENGINEER

7/06/2012

HL 93 LOADING

PESC P.E. Structural Consultants, Inc.
www.PEStructural.com
TBPE Firm No. F-1475

Texas Department of Transportation
© 2012

IH 35W FROM NORTH TARRANT PKWY TO IH 820

ABUTMENT NO. 8

EB US 287 TO SB IH 35W ML

SCALE: NTS — SHEET 1 OF 2

DESIGN	FED.RD. DIV.NO.	FEDERAL AID PROJECT NO.		HIGHWAY NO.
AEB	6	(SEE TITLE SHEET)		IH 35W
GRAPHICS TLS	STATE	DISTRICT	COUNTY	SHEET NO.
CHECK NRR	TEXAS	FTW	TARRANT	1487
CHECK AB	CONTROL	SECTION	JOB	
	0014	16	255, ETC.	

FILENAME: S3BBR*287E-MLS*AB*03.DGN
DRAWING DATE: 7/13/2012

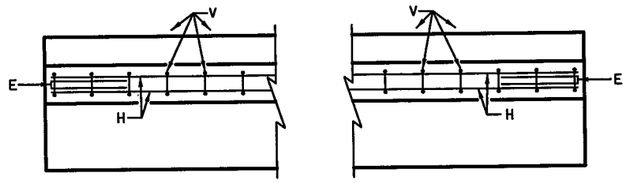

BACKWALL

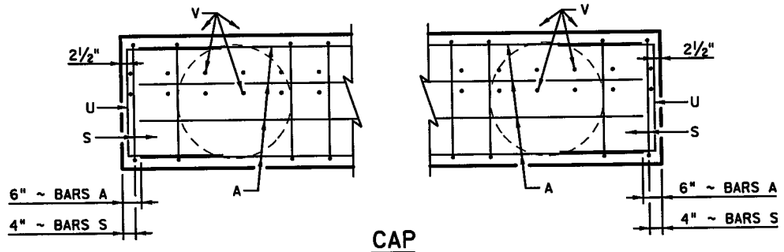

CAP

CORNER DETAILS

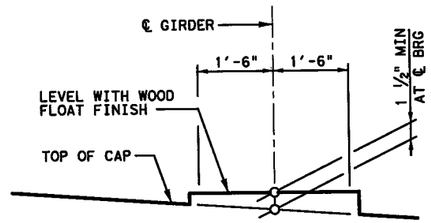

BEARING SEAT DETAIL

(BEARING SURFACE SHALL BE CLEAN AND FREE OF ALL LOOSE MATERIAL BEFORE PLACING BEARING PAD)

TABLE OF ESTIMATED QUANTITIES				
BAR	NO.	SIZE	LENGTH	WEIGHT
A	10	#11	45'-0"	2,391
E	10	#5	4'-6"	47
H	10	#6	45'-8"	686
S	44	#5	11'-4"	520
U	4	#6	8'-0"	48
V	47	#5	14'-6"	711
REINFORCING STEEL			LB	4,403
CL C CONC (HPC) (ABUT)			CY	23.4

THE FRONT AND BACK, BACKWALL FACES, SIDES, AND TOP, EXCEPT UNDER BEARING AREAS, SHALL BE TREATED WITH A "CLASS II, TYPE I PENETRATING CONCRETE SURFACE TREATMENT".

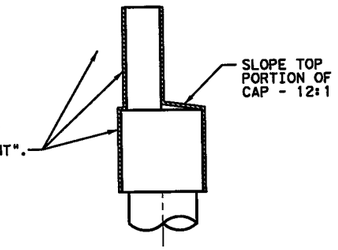

CONCRETE SURFACE TREATMENT DETAIL FOR ABUTMENT

GENERAL NOTES:

1. DESIGNED ACCORDING TO AASHTO LRFD BRIDGE DESIGN SPECIFICATIONS, 5TH EDITION (2010).
2. CLASS "C"(HPC) CONCRETE STRENGTH F'C = 3,600 PSI.
3. ALL CAP AND WALL REINFORCING SHALL BE GRADE 60.
4. SEE FD STANDARD FOR ALL FOUNDATION DETAILS AND NOTES.
5. SEE RAIL STANDARD FOR RAIL ANCHORAGE IN WINGWALLS.
6. CALCULATED FOUNDATION LOADS:
   CAP DRILLED SHAFTS = 110 TONS / D.S.
7. SEE BRIDGE DRAIN DETAILS FOR INFORMATION ON DRAINAGE PIPE.

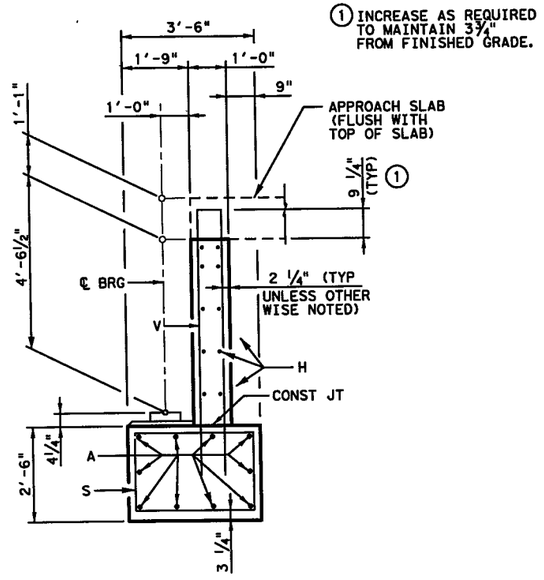

① INCREASE AS REQUIRED TO MAINTAIN 3¾" FROM FINISHED GRADE.

SECTION A-A

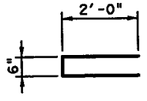

BARS E

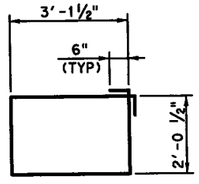

BARS S

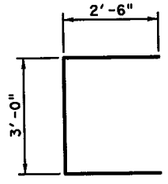

BARS U

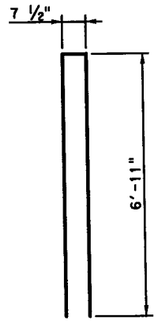

BARS V

HL 93 LOADING

STATE OF TEXAS
NESTOR R. RUBIANO
94294
LICENSED
PROFESSIONAL ENGINEER
7/06/2012

PESC P.E. Structural Consultants, Inc.
www.PEStructural.com
TBPE Firm No. F-1475

Texas Department of Transportation
© 2012

IH 35W FROM NORTH TARRANT PKWY TO IH 820

ABUTMENT NO. 8

EB US 287 TO SB IH 35W ML

SCALE: NTS — SHEET 2 OF 2

DESIGN	FED. RD. DIV. NO.	FEDERAL AID PROJECT NO.		HIGHWAY NO.
AEB	6	(SEE TITLE SHEET)		IH 35W
GRAPHICS TLS	STATE	DISTRICT	COUNTY	SHEET NO.
CHECK NRR	TEXAS	FTW	TARRANT	1488
CHECK AB	CONTROL	SECTION	JOB	
	0014	16	255, ETC.	

DRAWING DATE: 7/13/2012 FILENAME: S3BBR#287E-MLS#AB#04.DGN

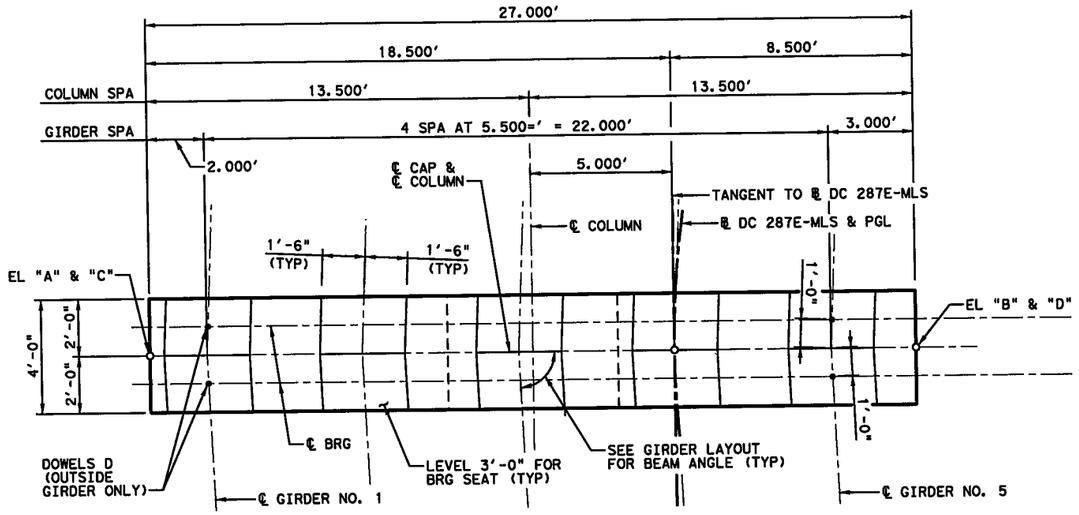

PLAN

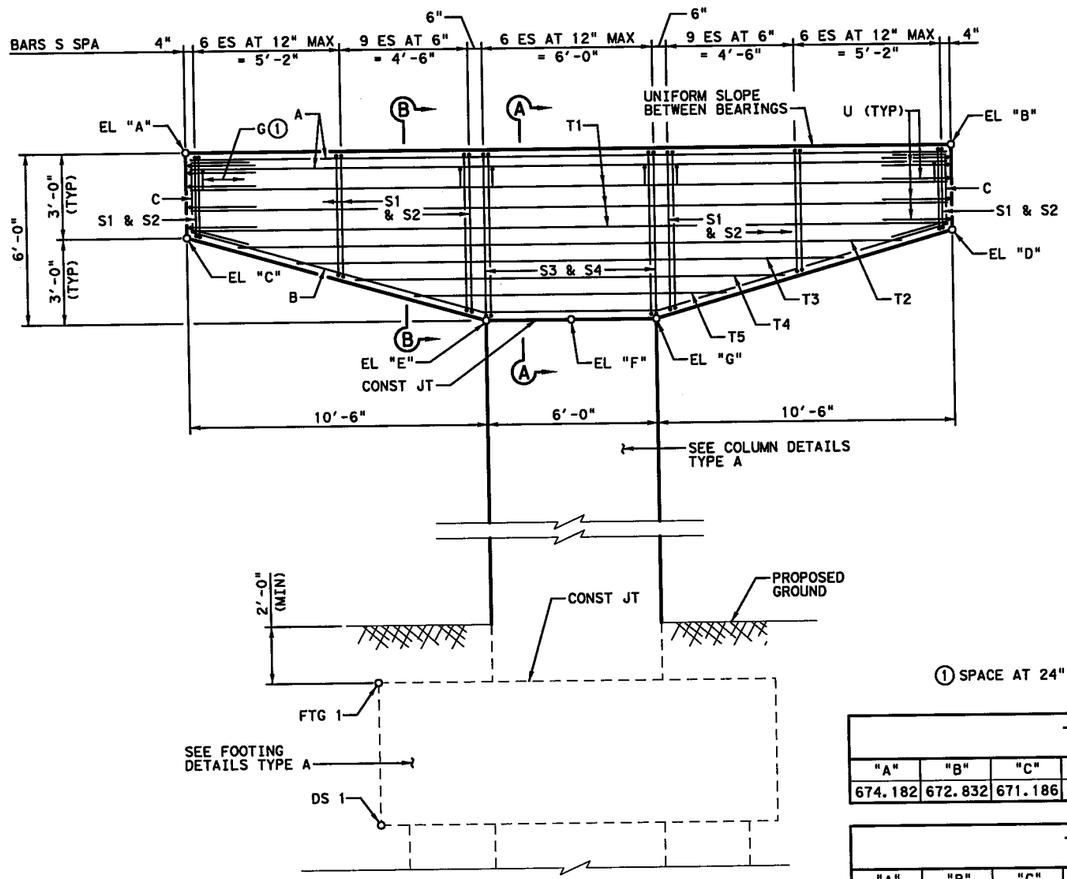

ELEVATION

① SPACE AT 24" MAX

TABLE OF ELEVATIONS ~ BENT 2

"A"	"B"	"C"	"D"	"E"	"F"	"G"	FTG 1	DS 1	DS TIP	AS-BUILT TIP
674.182	672.832	671.186	669.836	667.65	667.500	667.350	645.500	640.583	616.583	

TABLE OF ELEVATIONS ~ BENT 3

"A"	"B"	"C"	"D"	"E"	"F"	"G"	FTG 1	DS 1	DS TIP	AS-BUILT TIP
676.977	675.627	673.981	672.631	670.445	670.295	670.145	642.295	637.378	615.378	

TOP OF DRILLED SHAFT ELEVATIONS WERE ESTIMATED BASED ON GROUND ELEVATION INFORMATION AVAILABLE AT THE TIME OF DESIGN. CONTRACTOR SHALL CONFIRM THESE ELEVATIONS PRIOR TO DRILLING.

GENERAL NOTES:

1. DESIGNED ACCORDING TO AASHTO LRFD BRIDGE DESIGN SPECIFICATIONS, 5TH EDITION (2010).
2. CLASS "C"(HPC) CONCRETE STRENGTH F'C = 3,600 PSI.
3. ALL REINFORCING SHALL BE GRADE 60.
4. CALCULATED FOUNDATION LOAD: 375 TONS / D.S.

STATE OF TEXAS
NESTOR R. RUBIANO
94294
LICENSED
PROFESSIONAL ENGINEER

7/06/2012

HL 93 LOADING

PESC P.E. Structural Consultants, Inc.
www.PEStructural.com
TBPE Firm No. F-1475

Texas Department of Transportation
© 2012

IH 35W FROM NORTH TARRANT PKWY TO IH 820

INTERIOR BENT NO. 2 & 3

EB US 287 TO SB IH 35W ML

SCALE: NTS

SHEET 1 OF 2

DESIGN	FED.RD. DIV.NO.	FEDERAL AID PROJECT NO.		HIGHWAY NO.
AEB	6	(SEE TITLE SHEET)		IH 35W
GRAPHICS TLS	STATE	DISTRICT	COUNTY	SHEET NO.
CHECK NRR	TEXAS	FTW	TARRANT	1489
CHECK AB	CONTROL	SECTION	JOB	
	0014	16	255, ETC.	

FILENAME: S3BBR*287E-MLS*IB#01.DGN

DRAWING DATE: 7/13/2012

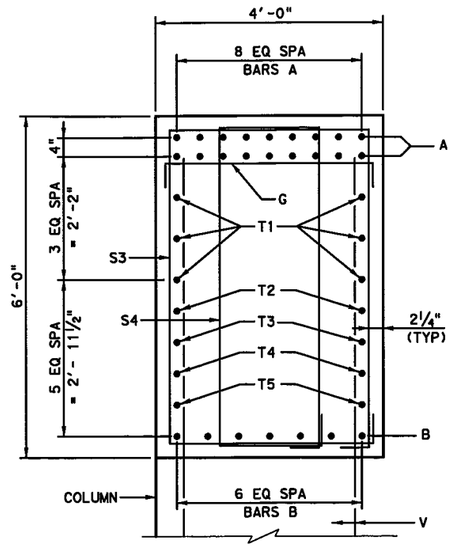

SECTION A-A

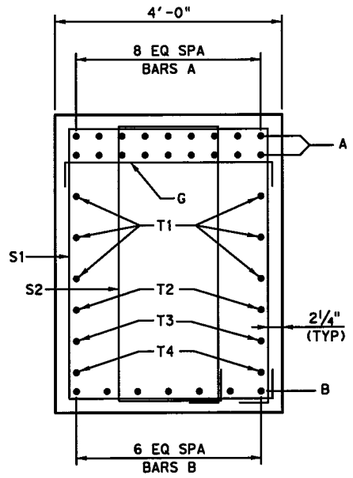

SECTION B-B

THE TOP, SIDES, AND ENDS, EXCEPT UNDER BEARING AREAS, SHALL BE TREATED WITH A "CLASS II, TYPE I PENETRATING CONCRETE SURFACE TREATMENT"

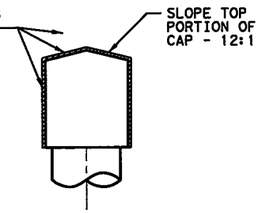

CONCRETE SURFACE TREATMENT DETAIL FOR INTERIOR BENT

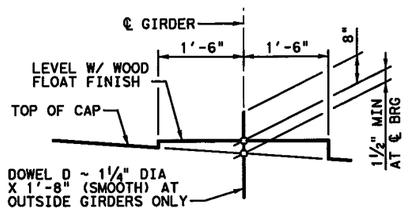

HEIGHTS UNDER 3"

BEARING SEAT DETAILS

(BEARING SURFACE MUST BE CLEAN AND FREE OF ALL LOOSE MATERIAL BEFORE PLACING BEARING PAD.)

TABLE OF ESTIMATED QUANTITIES ②				
BAR	NO.	SIZE	LENGTH	WEIGHT
A	18	#11	26'-8"	2,550
B	7	#11	27'-6"	1,023
D	4	1 1/4" D	1'-8"	28
E1	15	#5	5'-9"	90
E2	20	#5	4'-9"	99
S1	32	#5	16'-5" AVG	548
S2	32	#5	12'-8" AVG	423
S3	7	#5	19'-6"	142
S4	7	#5	15'-9"	115
C	14	#5	4'-7"	67
G	15	#4	4'-5"	44
T1	6	#7	26'-8"	327
T2	2	#7	23'-4"	95
T3	2	#7	19'-3"	79
T4	2	#7	15'-2"	62
T5	2	#7	11'-0"	45
U	10	#5	8'-7"	90
REINFORCING STEEL			LB	5,827
CL C CONC (HPC) (CAP)			CY	19.9

② PER BENT CAP

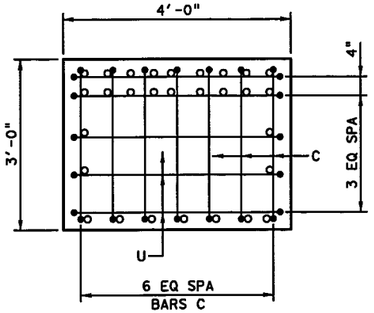

CAP END VIEW

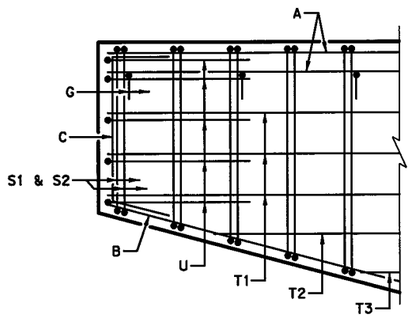

CAP END DETAIL

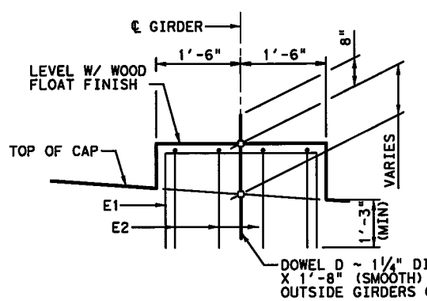

ELEVATION

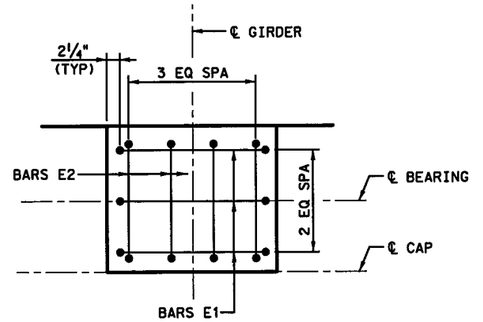

PLAN

HEIGHTS OVER 3"

BEARING SEAT DETAILS

(BEARING SURFACE MUST BE CLEAN AND FREE OF ALL LOOSE MATERIAL BEFORE PLACING BEARING PAD.)

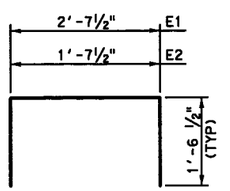

BARS E1 & E2

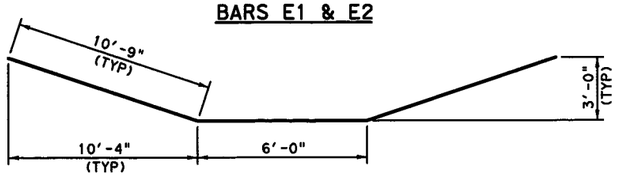

BARS B

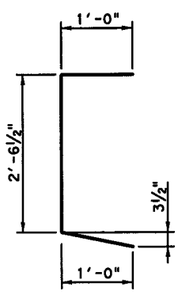

BARS C

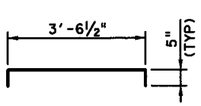

BARS G

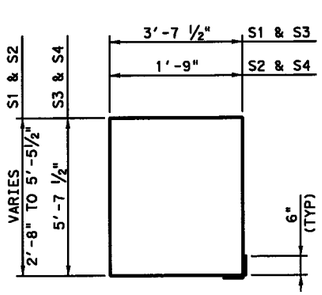

BARS S

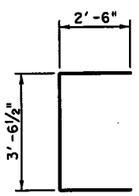

BARS U

HL 93 LOADING

PESC P.E. Structural Consultants, Inc. www.PEStructural.com TBPE Firm No. F-1475

Texas Department of Transportation

© 2012

IH 35W FROM NORTH TARRANT PKWY TO IH 820

INTERIOR BENT NO. 2 & 3

EB US 287 TO SB IH 35W ML

SCALE: NTS — SHEET 2 OF 2

DESIGN	FED. RD. DIV. NO.	FEDERAL AID PROJECT NO.		HIGHWAY NO.
AEB	6	(SEE TITLE SHEET)		IH 35W
GRAPHICS TLS	STATE	DISTRICT	COUNTY	SHEET NO.
CHECK NRR	TEXAS	FTW	TARRANT	1490
CHECK AB	CONTROL	SECTION	JOB	
	0014	16	255, ETC.	

FILENAME: S3BBR*287E-MLS*IB*02.dgn
DRAWING DATE: 7/13/2012

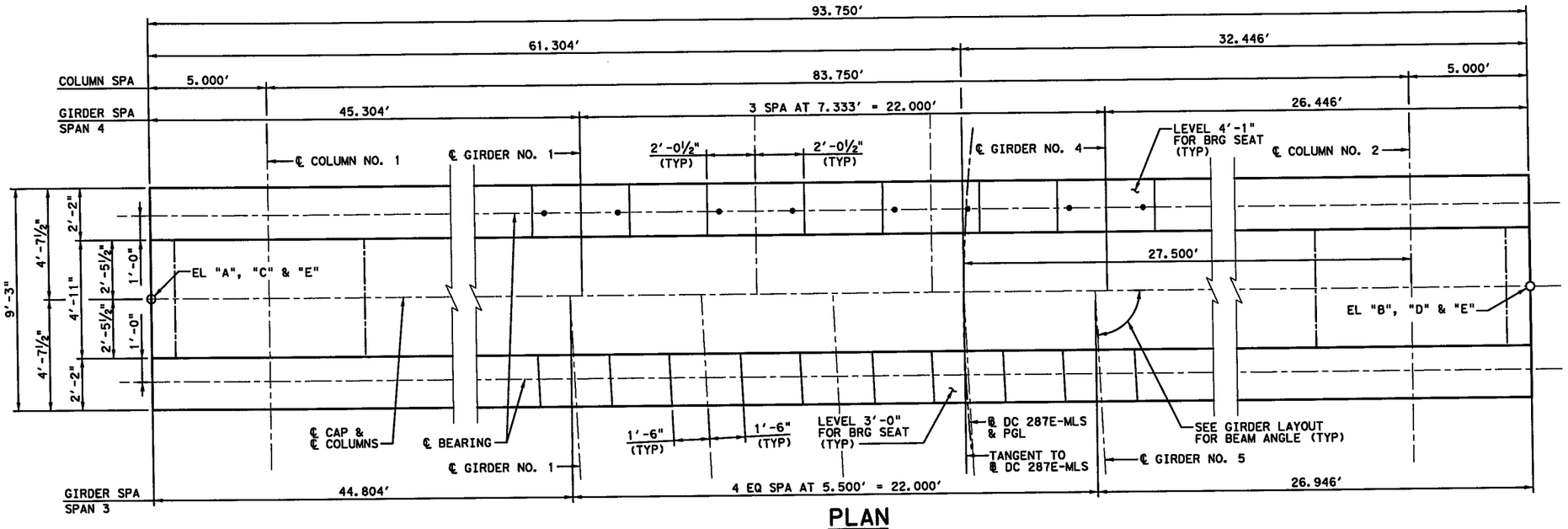

PLAN

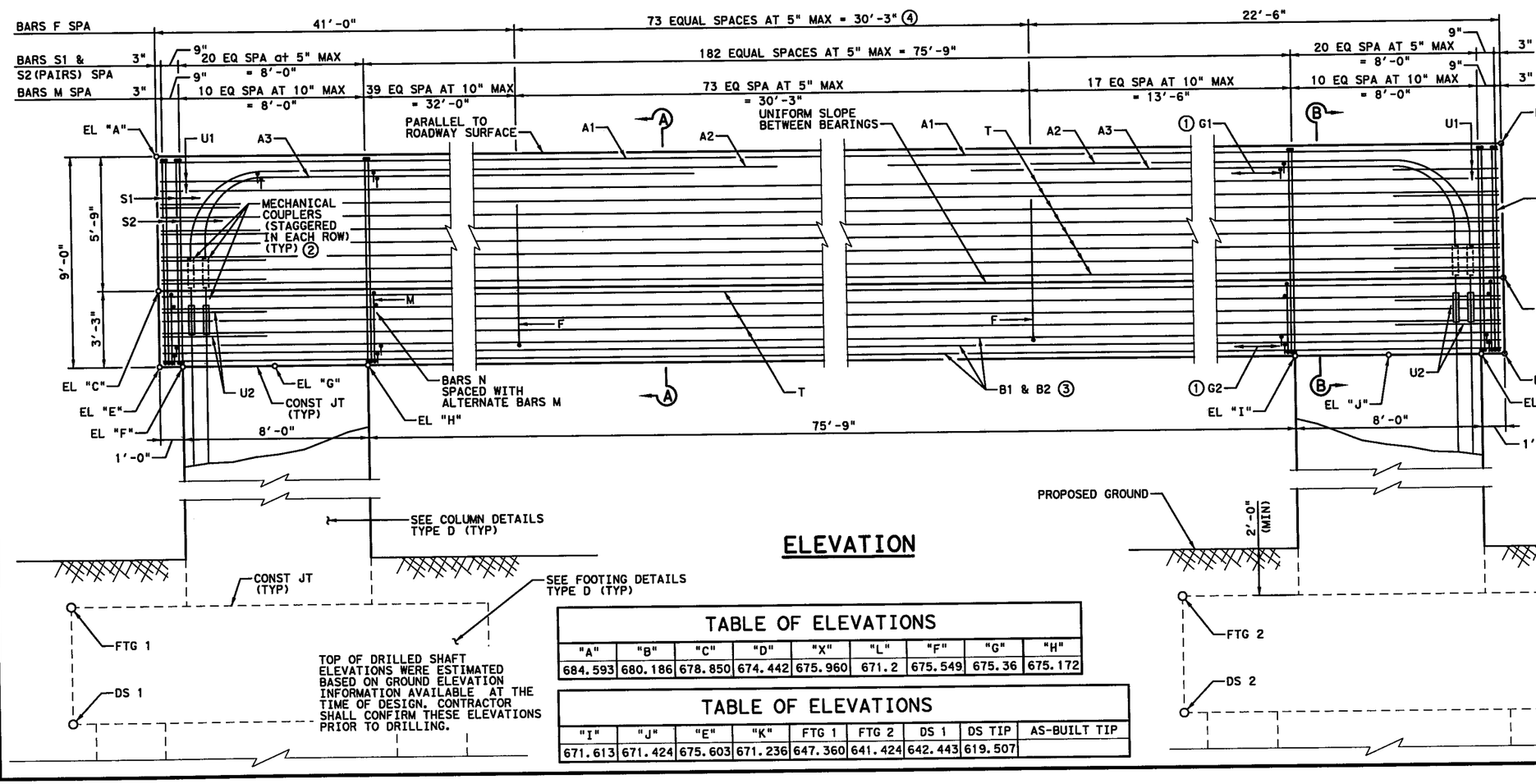

ELEVATION

TABLE OF ELEVATIONS								
"A"	"B"	"C"	"D"	"X"	"L"	"F"	"G"	"H"
684.593	680.186	678.850	674.442	675.960	671.2	675.549	675.36	675.172

TABLE OF ELEVATIONS								
"I"	"J"	"E"	"K"	FTG 1	FTG 2	DS 1	DS TIP	AS-BUILT TIP
671.613	671.424	675.603	671.236	647.360	641.424	642.443	619.507	

GENERAL NOTES:

1. DESIGNED ACCORDING TO AASHTO LRFD BRIDGE DESIGN SPECIFICATIONS, 5TH EDITION (2010).
2. THE ENGINEER SHALL BE CONTACTED PRIOR TO ANY AND/OR ALL ACTIVITIES RELATED TO BENT CONSTRUCTION INCLUDING BUT NOT LIMITED TO FORMING, REBAR ASSEMBLY, ETC.
3. CLASS "F" (HPC) CONCRETE STRENGTH F'C = 5,000 PSI.
4. ALL REINFORCING SHALL BE GRADE 60.
5. CALCULATED FOUNDATION LOAD: 505 TONS / D.S.
6. CONTRACTOR SHALL FIELD ADJUST CAP REINFORCEMENT TO AVOID CONFLICT WITH COLUMN REINFORCEMENT. MINIMUM CLEAR SPACING BETWEEN PARALLEL BARS SHALL NOT BE LESS THAN 2 ½".

① SPACE AT 24" MAX

② SEE "MECH COUPLER STAGGERING DETAIL" IN SHEET 2 OF 3

③ BARS B2 SHALL BE CENTERED BETWEEN COLUMNS

④ SPACE WITH BARS S

STATE OF TEXAS
NESTOR R. RUBIANO
94294
LICENSED
PROFESSIONAL ENGINEER

7/06/2012

HL 93 LOADING

P.E. Structural Consultants, Inc.
www.PEStructural.com
TBPE Firm No. F-1475

Texas Department of Transportation
© 2012

IH 35W FROM NORTH TARRANT PKWY TO IH 820

INTERIOR BENT NO. 4

EB US 287 TO SB IH 35W ML

SCALE: NTS

SHEET 1 OF 3

DESIGN	FED.RD. DIV.NO.	FEDERAL AID PROJECT NO.		HIGHWAY NO.
AEB	6	(SEE TITLE SHEET)		IH 35W
GRAPHICS	STATE	DISTRICT	COUNTY	SHEET NO.
TLS	TEXAS	FTW	TARRANT	1491
CHECK	CONTROL	SECTION	JOB	
NRR	0014	16	255, ETC.	
CHECK				
AB				

FILENAME: S3BBR*287E-MLS*IB*03.DGN

DRAWING DATE: 7/13/2012

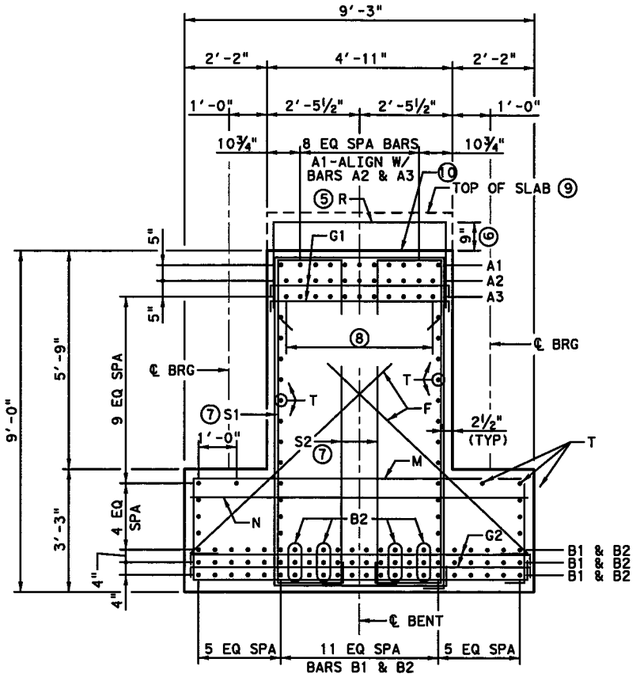

SECTION A-A

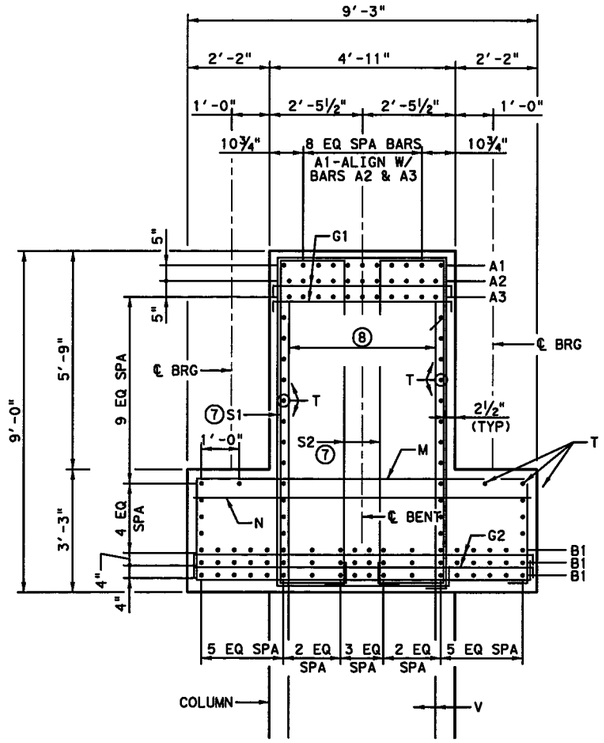

SECTION B-B

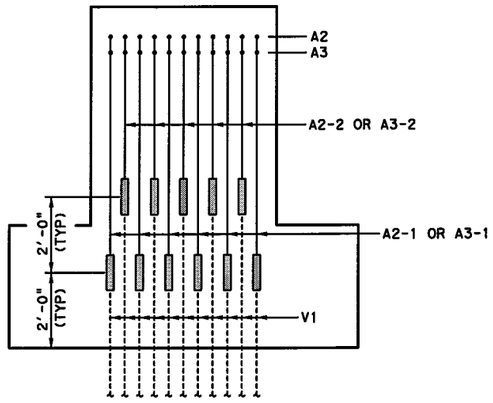

MECH COUPLER STAGGERING DETAIL

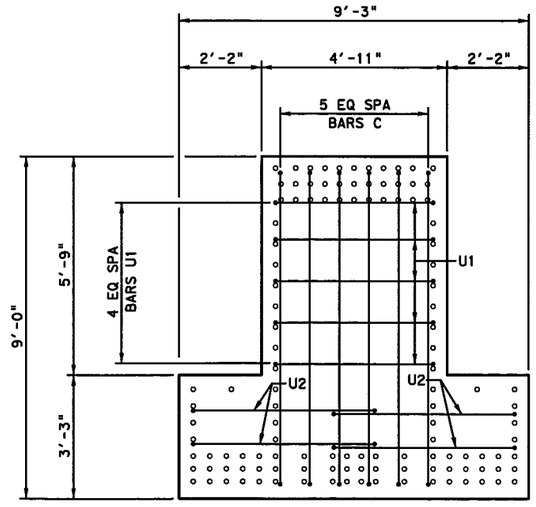

CAP END VIEW

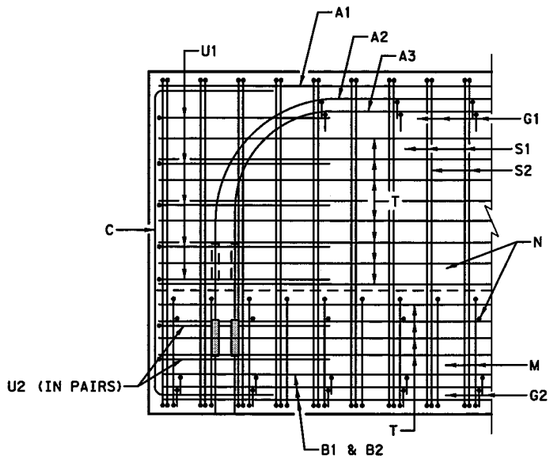

CAP END DETAIL

⑤ SPACED AT 6" MAX ALONG CAP LENGTH. SEE UNIT SHEETS FOR ADDITIONAL SLAB REINFORCING NOT SHOWN HERE.

⑥ TOP OF BAR SHALL BE PARALLEL TO ROADWAY SLOPE. ADJUST AS REQUIRED TO MAINTAIN 2 ½" FROM FINISHED GRADE AND 1'-0" MINIMUM EMBEDMENT INTO CAP.

⑦ PLACE HOOKS OF STIRRUP AT BOTTOM OF CAP AS SHOWN

⑧ 10 EQ SPA - BARS A2 & A3 - MATCH COLUMN BARS V

⑨ CAST AFTER ADJACENT CONCRETE SLABS

⑩ ROUGHEN CONCRETE AT TOP OF CAP PRIOR TO HARDENING

STATE OF TEXAS
NESTOR R. RUBIANO
94294
LICENSED
PROFESSIONAL ENGINEER
8/29/2012

HL 93 LOADING

PESC P.E. Structural Consultants, Inc.
www.PEStructural.com
TBPE Firm No. F-1475

Texas Department of Transportation
© 2012

IH 35W FROM NORTH TARRANT PKWY TO IH 820

INTERIOR BENT NO. 4

EB US 287 TO SB IH 35W ML

SCALE: NTS SHEET 2 OF 3

DESIGN	FED. RD. DIV. NO.	FEDERAL AID PROJECT NO.		HIGHWAY NO.
AEB	6	(SEE TITLE SHEET)		IH 35W
GRAPHICS TLS	STATE	DISTRICT	COUNTY	SHEET NO.
CHECK NRR	TEXAS	FTW	TARRANT	1492
CHECK AB	CONTROL	SECTION	JOB	
	0014	16	255, ETC.	

FILENAME: S3BBR*287E-MLS*IB#04.DGN
DRAWING DATE: 7/13/2012

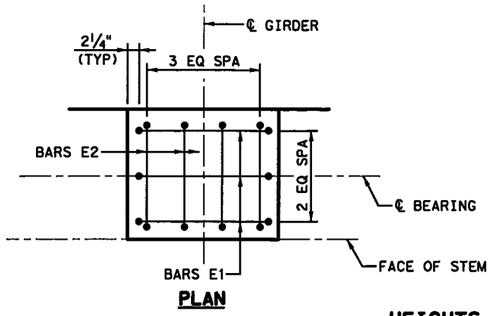

PLAN

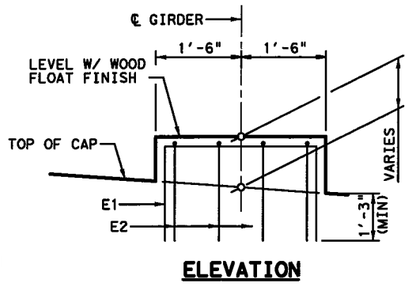

ELEVATION

HEIGHTS OVER 3"

BEARING SEAT & PEDESTAL DETAIL ~ I-GIRDERS

(BEARING SURFACE MUST BE CLEAN AND FREE OF ALL LOOSE MATERIAL BEFORE PLACING BEARING PAD.)

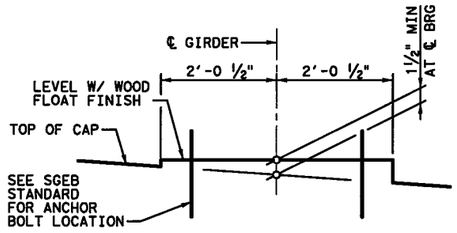

HEIGHTS 3" OR LESS

BEARING SEAT & PEDESTAL DETAIL ~ PLATE GIRDERS

(BEARING SURFACE MUST BE CLEAN AND FREE OF ALL LOOSE MATERIAL BEFORE PLACING BEARING PAD.)

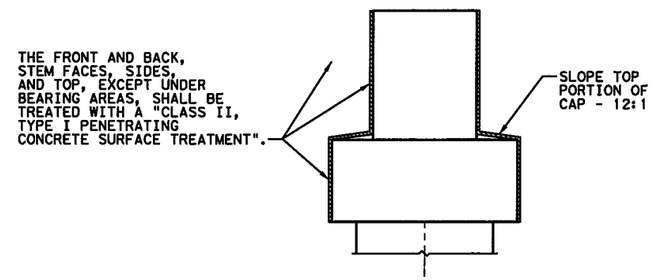

CONCRETE SURFACE TREATMENT DETAIL FOR INV.-TEE BENT

TABLE OF ESTIMATED QUANTITIES

	BAR	NO.	SIZE	LENGTH	WEIGHT
(11)	A1	11	#14	93'-5"	7,861
(11)	A2-1	12	#14	36'-3"	3,328
(11)	A2-2	10	#14	34'-3"	2,620
(11)	A3-1	12	#14	25'-10"	2,372
(11)	A3-2	10	#14	23'-10"	1,823
(11)	B1	54	#11	93'-5"	26,801
(11)	B2	12	#11	75'-9"	4,830
	C	12	#5	16'-6"	207
	E1	15	#5	6'-8"	104
	E2	20	#5	5'-10"	122
	F	74	#5	9'-11"	765
	G1	50	#4	5'-4"	178
	G2	96	#4	9'-8"	620
	M	152	#6	25'-4"	5,784
	N	76	#6	8'-11"	1,018
	R	57	#4	8'-6"	324
	S1	225	#6	28'-2"	9,519
	S2	450	#6	22'-8"	15,320
(12)	T	34	#7	95'-6"	6,637
	U1	10	#5	12'-5"	130
	U2	8	#5	12'-10"	107
REINFORCING STEEL				LB	90,470
CL F CONC (MASS) (HPC) (CAP)				CY	203.8

(11) INCLUDES ONE CLASS B MECH COUPLER (STAGGER LOCATIONS)

(12) INCLUDES ONE 2'-1" LAP SPLICE

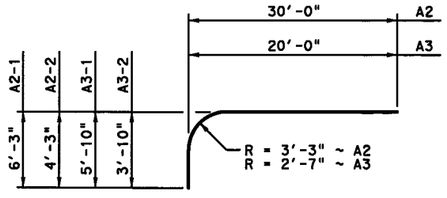

BARS A2 & A3

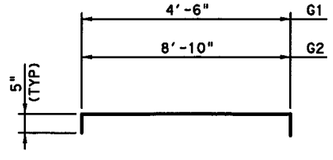

BARS G

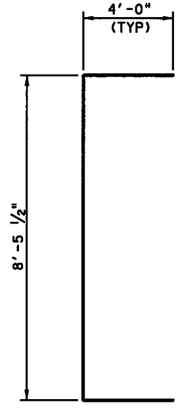

BARS C

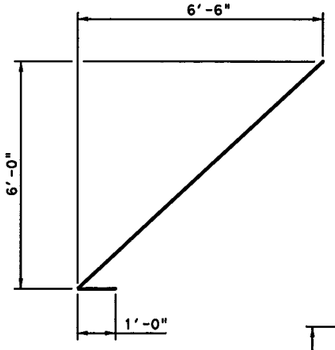

BARS F

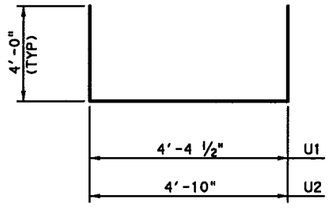

BARS U

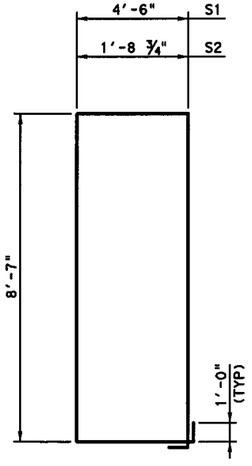

BARS S

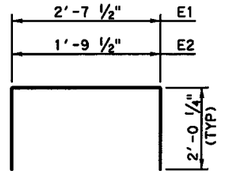

BARS E1 & E2

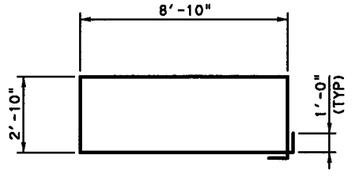

BARS M

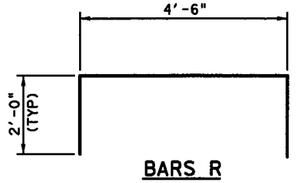

BARS R

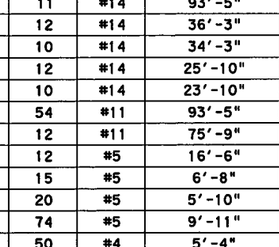

HL 93 LOADING

PESC P.E. Structural Consultants, Inc.
www.PEStructural.com
TBPE Firm No. F-1475

Texas Department of Transportation
© 2012

IH 35W FROM NORTH TARRANT PKWY TO IH 820

INTERIOR BENT NO. 4

EB US 287 TO SB IH 35W ML

SCALE: NTS — SHEET 3 OF 3

DESIGN	FED. RD. DIV. NO.	FEDERAL AID PROJECT NO.		HIGHWAY NO.
AEB	6	(SEE TITLE SHEET)		IH 35W
GRAPHICS TLS	STATE	DISTRICT	COUNTY	SHEET NO.
CHECK NRR	TEXAS	FTW	TARRANT	1493
CHECK AB	CONTROL	SECTION	JOB	
	0014	16	255, ETC.	

FILENAME: S38BR*287E-MLS*IB*11.dgn

DRAWING DATE: 7/13/2012

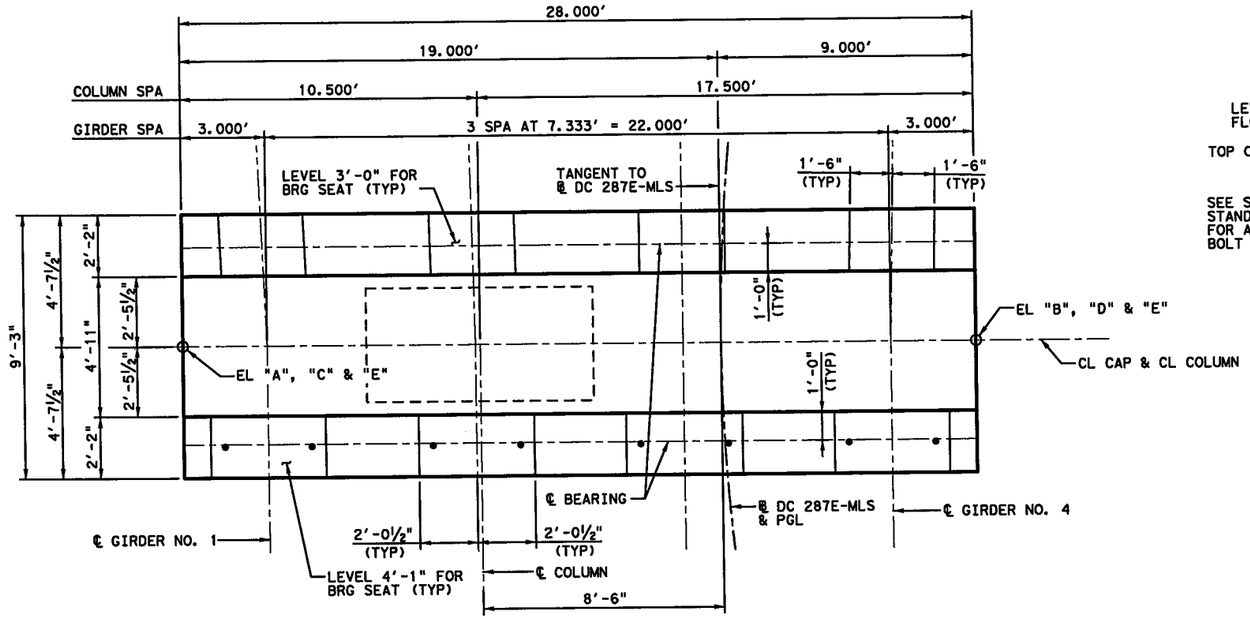

PLAN

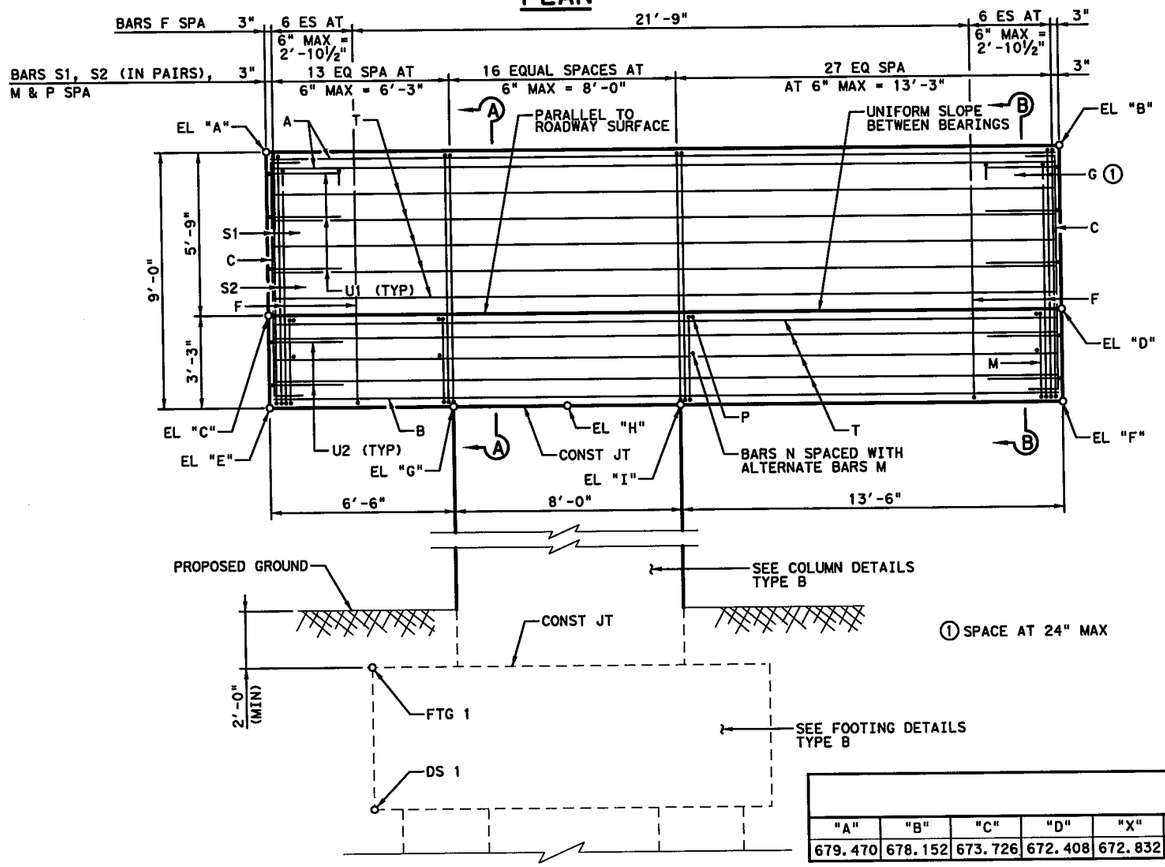

ELEVATION

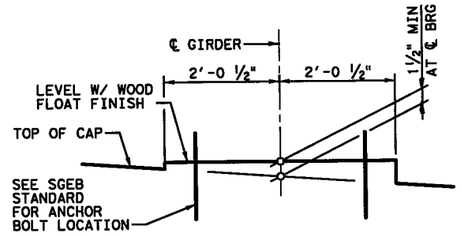

BEARING SEAT DETAIL

(STEEL PLATE GIRDERS)
(BEARING SURFACE MUST BE CLEAN AND FREE OF ALL LOOSE MATERIAL BEFORE PLACING BEARING PAD.)

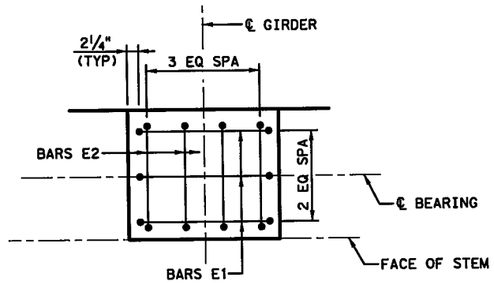

PLAN

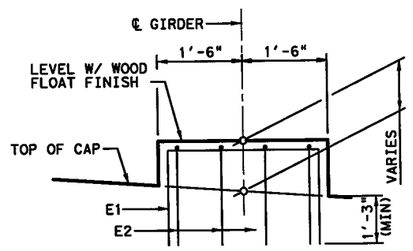

ELEVATION

HEIGHTS OVER 3"

BEARING SEAT & PEDESTAL DETAIL

(CONCRETE I-GIRDERS)
(BEARING SURFACE MUST BE CLEAN AND FREE OF ALL LOOSE MATERIAL BEFORE PLACING BEARING PAD.)

TABLE OF ELEVATIONS

"A"	"B"	"C"	"D"	"X"	"E"	"F"	"G"	"H"	"I"	FTG 1	DS 1	DS TIP	AS-BUILT TIP
679.470	678.152	673.726	672.408	672.832	670.480	669.162	670.167	669.978	669.790	647.978	643.061	623.061	

TOP OF DRILLED SHAFT ELEVATIONS WERE ESTIMATED BASED ON GROUND ELEVATION INFORMATION AVAILABLE AT THE TIME OF DESIGN. CONTRACTOR SHALL CONFIRM THESE ELEVATIONS PRIOR TO DRILLING.

GENERAL NOTES:

1. DESIGNED ACCORDING TO AASHTO LRFD BRIDGE DESIGN SPECIFICATIONS, 5TH EDITION (2010).
2. CLASS "F" (HPC) CONCRETE STRENGTH F'C = 5,000 PSI.
3. ALL REINFORCING SHALL BE GRADE 60.
4. CALCULATED FOUNDATION LOAD: 510 TONS / D.S.

STATE OF TEXAS
NESTOR R. RUBIANO
94294
LICENSED
PROFESSIONAL ENGINEER
7/06/2012

HL 93 LOADING

P.E. Structural Consultants, Inc.
www.PEStructural.com
TBPE Firm No. F-1475

Texas Department of Transportation
© 2012

IH 35W FROM NORTH TARRANT PKWY TO IH 820

INTERIOR BENT NO. 5

EB US 287 TO SB IH 35W ML

SCALE: NTS

SHEET 1 OF 2

DESIGN	FED. RD. DIV. NO.	FEDERAL AID PROJECT NO.		HIGHWAY NO.
AEB	6	(SEE TITLE SHEET)		IH 35W
GRAPHICS TLS	STATE	DISTRICT	COUNTY	SHEET NO.
CHECK NRR	TEXAS	FTW	TARRANT	1494
CHECK AB	CONTROL	SECTION	JOB	
	0014	16	255, ETC.	

DRAWING DATE: 7/13/2012 FILENAME: S3BBR#287E-ML$#IB#05.DGN

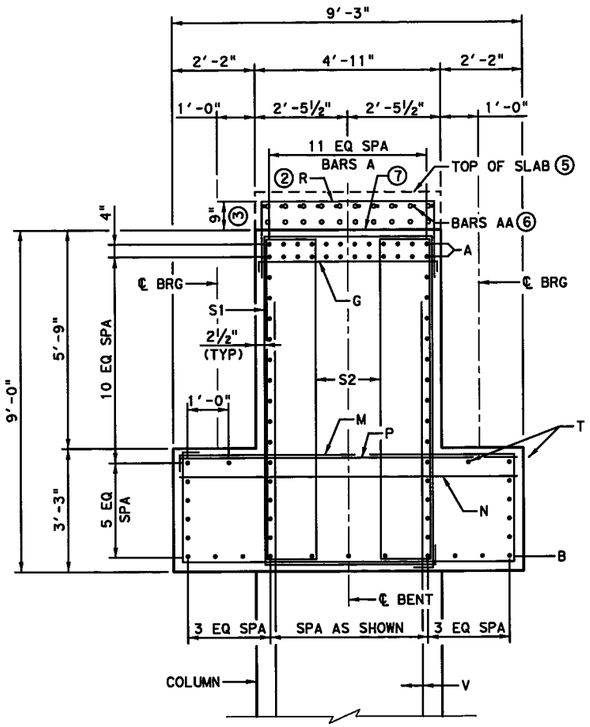

SECTION A-A

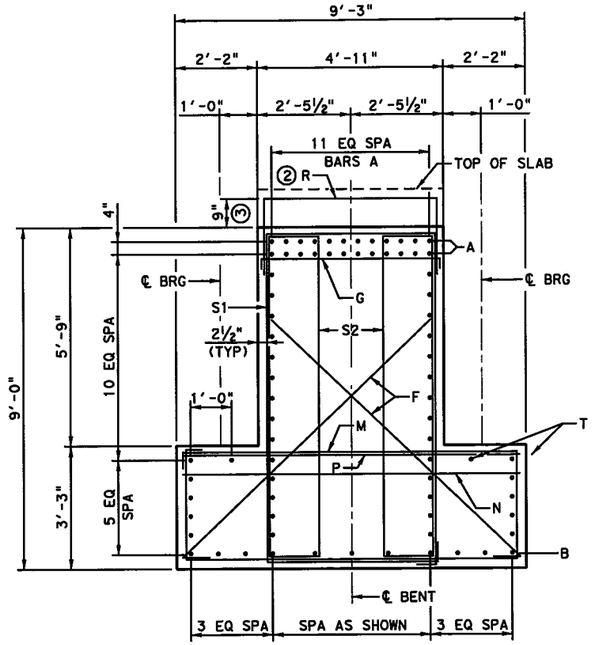

SECTION B-B

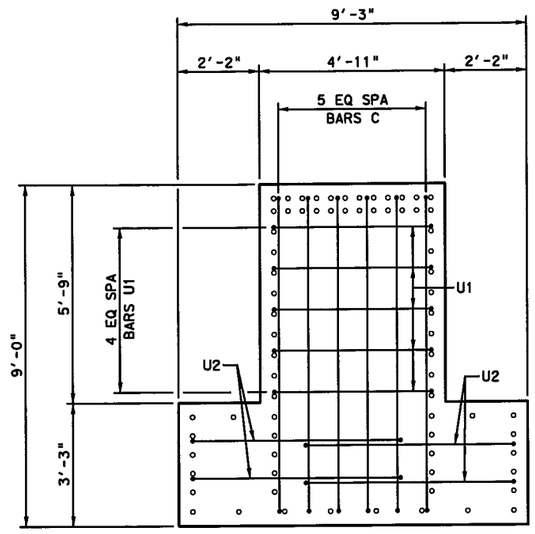

CAP END VIEW

THE FRONT AND BACK, STEM FACES, SIDES, AND TOP, EXCEPT UNDER BEARING AREAS, SHALL BE TREATED WITH A "CLASS II, TYPE I PENETRATING CONCRETE SURFACE TREATMENT".

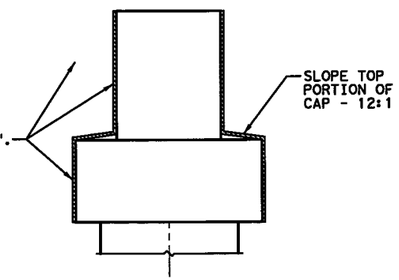

CONCRETE SURFACE TREATMENT DETAIL FOR INV.-TEE BENT

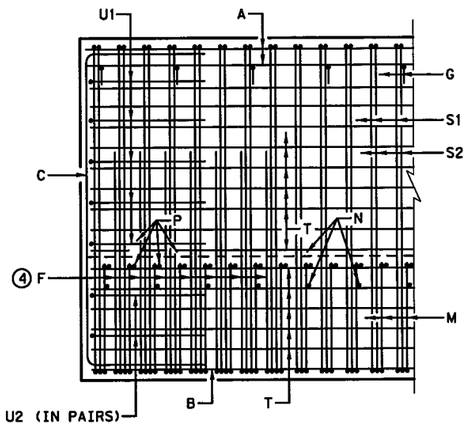

CAP END DETAIL

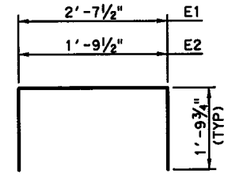

BARS E1 & E2

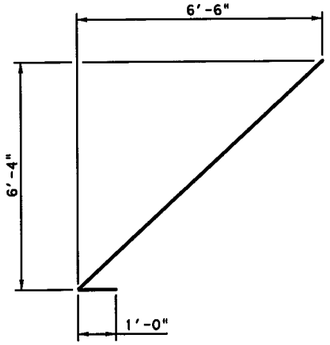

BARS F

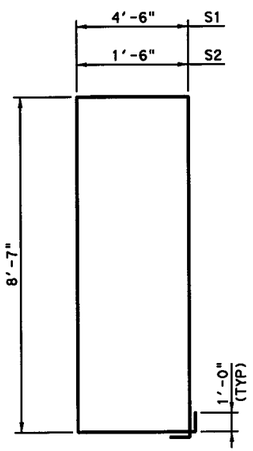

BARS S

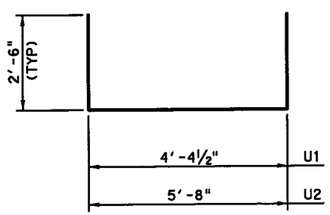

BARS U

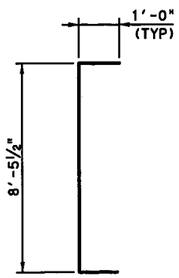

BARS C

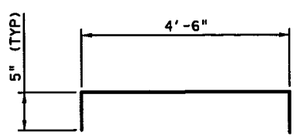

BARS G

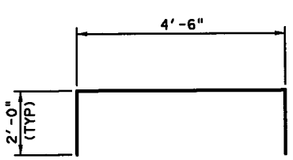

BARS R

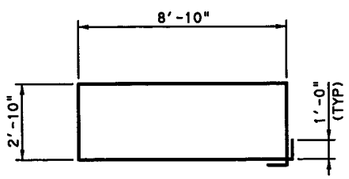

BARS M

TABLE OF ESTIMATED QUANTITIES

BAR	NO.	SIZE	LENGTH	WEIGHT
A	24	#11	27'-8"	3,528
AA	10	#7	27'-8"	566
B	11	#11	27'-8"	1,617
C	12	#5	10'-6"	131
E1	12	#5	6'-3"	78
E2	16	#5	5'-5"	90
F	28	#7	10'-1"	577
G	15	#4	5'-4"	53
M	57	#6	25'-4"	2,169
N	29	#6	8'-11"	388
P	57	#4	8'-11"	340
R	57	#4	8'-6"	324
S1	57	#6	28'-2"	2,411
S2	114	#6	22'-2"	3,796
T	40	#7	27'-8"	2,262
U1	10	#5	9'-5"	98
U2	8	#5	10'-8"	89
REINFORCING STEEL			LB	18,428
CL F CONC (MASS) (HPC) (CAP)			CY	61.3

② SPACED AT 6" MAX ALONG CAP LENGTH. SEE UNIT SHEET PLANS FOR SLAB REINFORCING (SHOWN AS HOLLOW CIRCLES HERE FOR CLARITY).

③ TOP OF BAR SHALL BE PARALLEL TO ROADWAY SLOPE. ADJUST AS REQUIRED TO MAINTAIN 2 ½" FROM FINISHED GRADE AND 1'-0" MINIMUM EMBEDMENT INTO CAP.

④ SPACE WITH BARS S

⑤ CAST AFTER ADJACENT SLABS

⑥ BUNDLE BARS AT WITH SLAB TOP BARS

⑦ ROUGHEN CONCRETE AT TOP OF CAP PRIOR TO HARDENING

STATE OF TEXAS
NESTOR R. RUBIANO
94294
LICENSED
PROFESSIONAL ENGINEER
8/29/2012

HL 93 LOADING

P.E. Structural Consultants, Inc.
www.PEStructural.com
TBPE Firm No. F-1475

Texas Department of Transportation
© 2012

IH 35W FROM NORTH TARRANT PKWY TO IH 820

INTERIOR BENT NO. 5

EB US 287 TO SB IH 35W ML

SCALE: NTS — SHEET 2 OF 2

DESIGN	FED.RD. DIV.NO.	FEDERAL AID PROJECT NO.		HIGHWAY NO.
AEB	6	(SEE TITLE SHEET)		IH 35W
GRAPHICS TLS	STATE	DISTRICT	COUNTY	SHEET NO.
CHECK NRR	TEXAS	FTW	TARRANT	1495
CHECK AB	CONTROL	SECTION	JOB	
	0014	16	255, ETC.	

FILENAME: S3BBR*287E-MLS*IB*06.DGN

DRAWING DATE: 7/13/2012

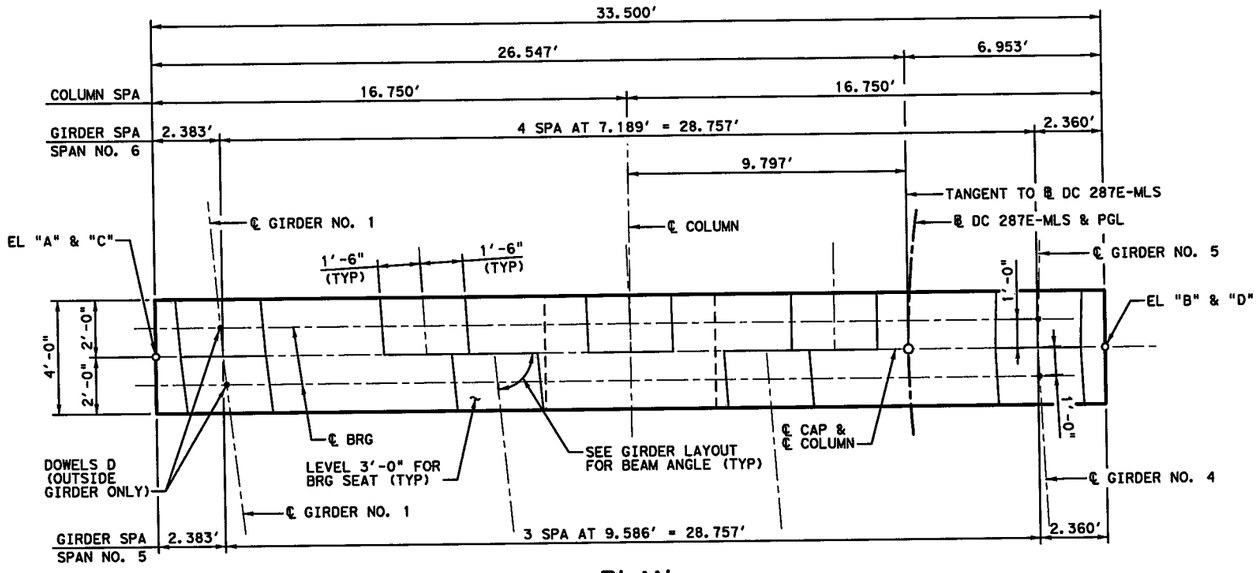

PLAN

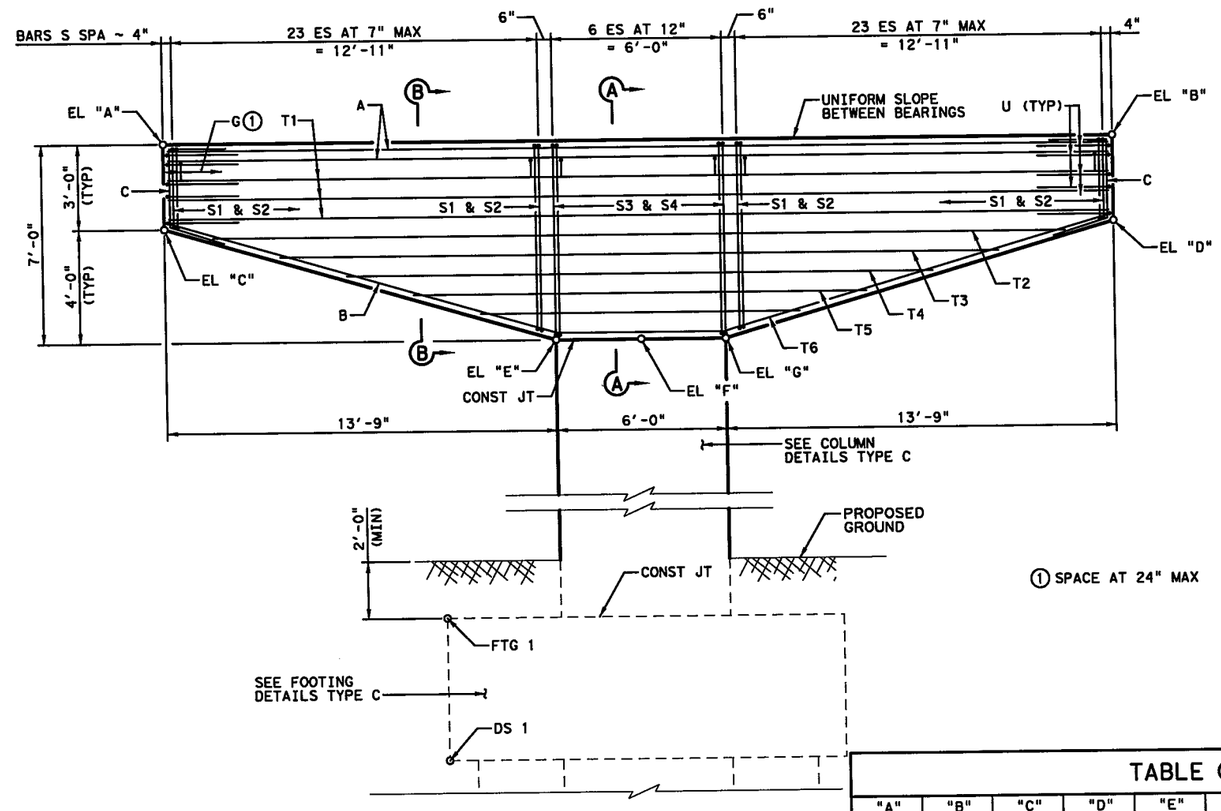

ELEVATION

TABLE OF ELEVATIONS

"A"	"B"	"C"	"D"	"E"	"F"	"G"	FTG 1	DS 1	DS TIP	AS-BUILT TIP
671.167	669.491	668.171	666.495	663.47	663.320	663.170	647.320	642.403	627.403	

TOP OF DRILLED SHAFT ELEVATIONS WERE ESTIMATED BASED ON GROUND ELEVATION INFORMATION AVAILABLE AT THE TIME OF DESIGN. CONTRACTOR SHALL CONFIRM THESE ELEVATIONS PRIOR TO DRILLING.

GENERAL NOTES:

1. DESIGNED ACCORDING TO AASHTO LRFD BRIDGE DESIGN SPECIFICATIONS, 5TH EDITION (2010).
2. CLASS "C"(HPC) CONCRETE STRENGTH F'C = 3,600 PSI.
3. ALL REINFORCING SHALL BE GRADE 60.
4. CALCULATED FOUNDATION LOAD: 355 TONS / D.S.
5. SEE BRIDGE DRAIN DETAILS FOR INFORMATION ON DRAINAGE PIPE.

STATE OF TEXAS
NESTOR R. RUBIANO
94294
LICENSED
PROFESSIONAL ENGINEER

7/06/2012

HL 93 LOADING

P.E. Structural Consultants, Inc.
www.PEStructural.com
TBPE Firm No. F-1475

Texas Department of Transportation

© 2012

IH 35W FROM NORTH TARRANT PKWY TO IH 820

INTERIOR BENT NO. 6

EB US 287 TO SB IH 35W ML

SCALE: NTS

DESIGN	FED.RD. DIV. NO.	FEDERAL AID PROJECT NO.		HIGHWAY NO.
AEB	6	(SEE TITLE SHEET)		IH 35W
GRAPHICS TLS	STATE	DISTRICT	COUNTY	SHEET NO.
CHECK NRR	TEXAS	FTW	TARRANT	1496
CHECK AB	CONTROL	SECTION	JOB	
	0014	16	255, ETC.	

FILENAME: S3BBR*287E-ML*IB*07.DGN

DRAWING DATE: 7/13/2012

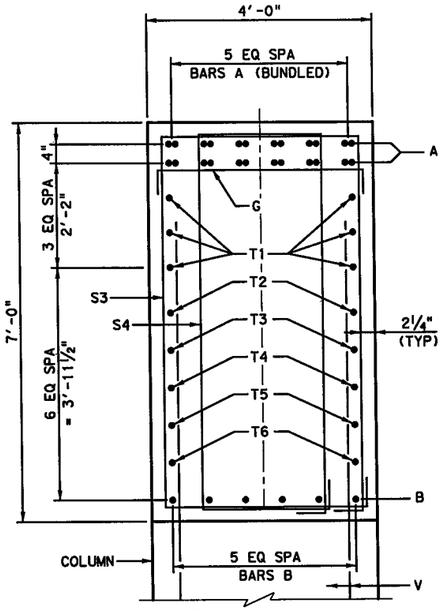

SECTION A-A

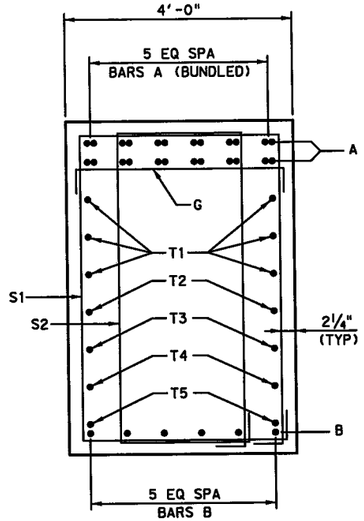

SECTION B-B

THE TOP, SIDES, AND ENDS, EXCEPT UNDER BEARING AREAS, SHALL BE TREATED WITH A "CLASS II, TYPE I PENETRATING CONCRETE SURFACE TREATMENT"

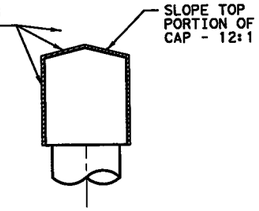

CONCRETE SURFACE TREATMENT DETAIL FOR INTERIOR BENT

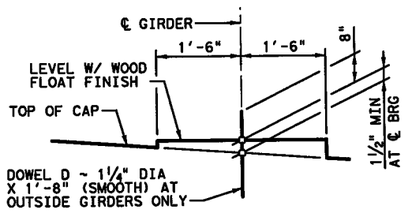

HEIGHTS UNDER 3"

BEARING SEAT DETAILS

(BEARING SURFACE MUST BE CLEAN AND FREE OF ALL LOOSE MATERIAL BEFORE PLACING BEARING PAD.)

TABLE OF ESTIMATED QUANTITIES

BAR	NO.	SIZE	LENGTH	WEIGHT
A	24	#11	33'-2"	4,229
B	6	#11	34'-4"	1,094
D	4	1 1/4" D	1'-8"	28
E1	12	#5	5'-6"	69
E2	16	#5	4'-6"	75
S1	48	#5	17'-5" AVG	872
S2	48	#5	14'-9" AVG	738
S3	7	#5	21'-6"	157
S4	7	#5	18'-10"	138
C	12	#5	4'-7"	57
G	18	#4	4'-5"	53
T1	6	#7	33'-2"	407
T2	2	#7	30'-0"	123
T3	2	#7	25'-4"	104
T4	2	#7	20'-7"	84
T5	2	#7	15'-11"	65
T6	2	#7	11'-2"	46
U	10	#5	8'-7"	90
REINFORCING STEEL			LB	8,429
CL C CONC (HPC) (CAP)			CY	27.0

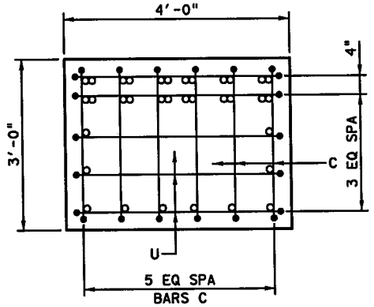

CAP END VIEW

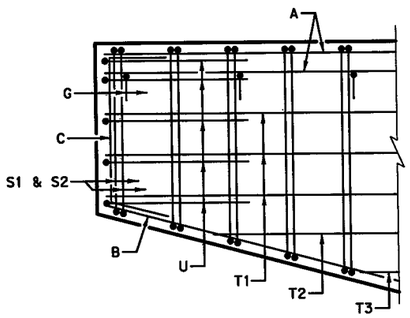

CAP END DETAIL

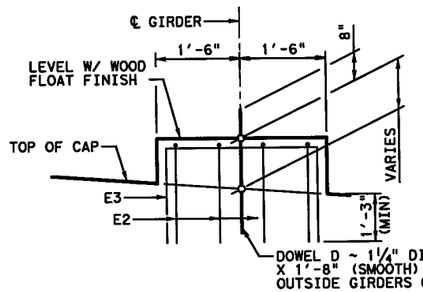

ELEVATION

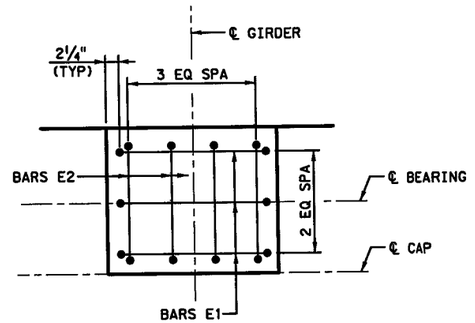

PLAN

HEIGHTS OVER 3"

BEARING SEAT DETAILS

(BEARING SURFACE MUST BE CLEAN AND FREE OF ALL LOOSE MATERIAL BEFORE PLACING BEARING PAD.)

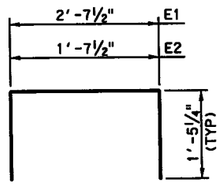

BARS E1 & E2

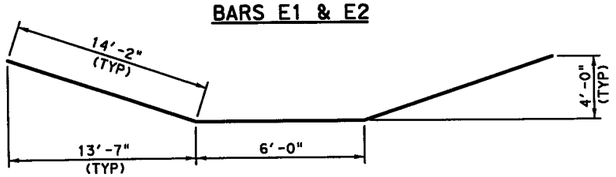

BARS B

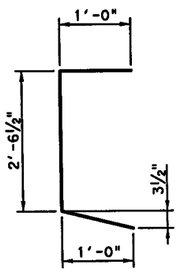

BARS C

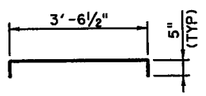

BARS G

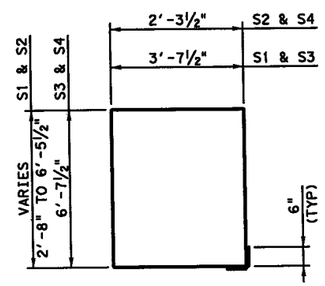

BARS S

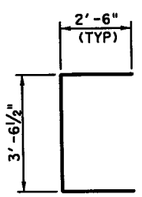

BARS U

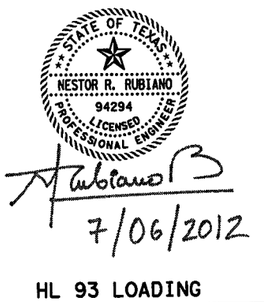

HL 93 LOADING

PESC P.E. Structural Consultants, Inc.
www.PEStructural.com
TBPE Firm No. F-1475

Texas Department of Transportation
© 2012

IH 35W FROM NORTH TARRANT PKWY TO IH 820

INTERIOR BENT NO. 6

EB US 287 TO SB IH 35W ML

SCALE: NTS — SHEET 2 OF 2

DESIGN	FED.RD. DIV.NO.	FEDERAL AID PROJECT NO.		HIGHWAY NO.
AEB	6	(SEE TITLE SHEET)		IH 35W
GRAPHICS TLS	STATE	DISTRICT	COUNTY	SHEET NO.
CHECK NRR	TEXAS	FTW	TARRANT	1497
CHECK AB	CONTROL	SECTION	JOB	
	0014	16	255, ETC.	

FILENAME: S3BBR#287E-MLS#IB#08.DGN

DRAWING DATE: 7/13/2012

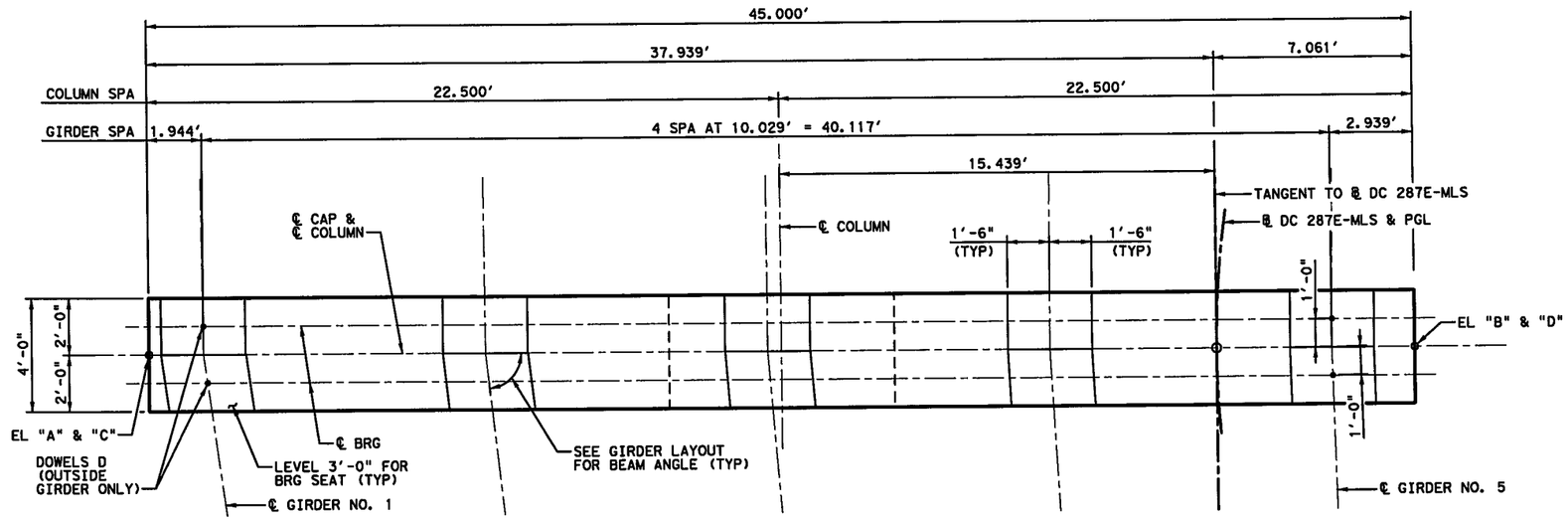

PLAN

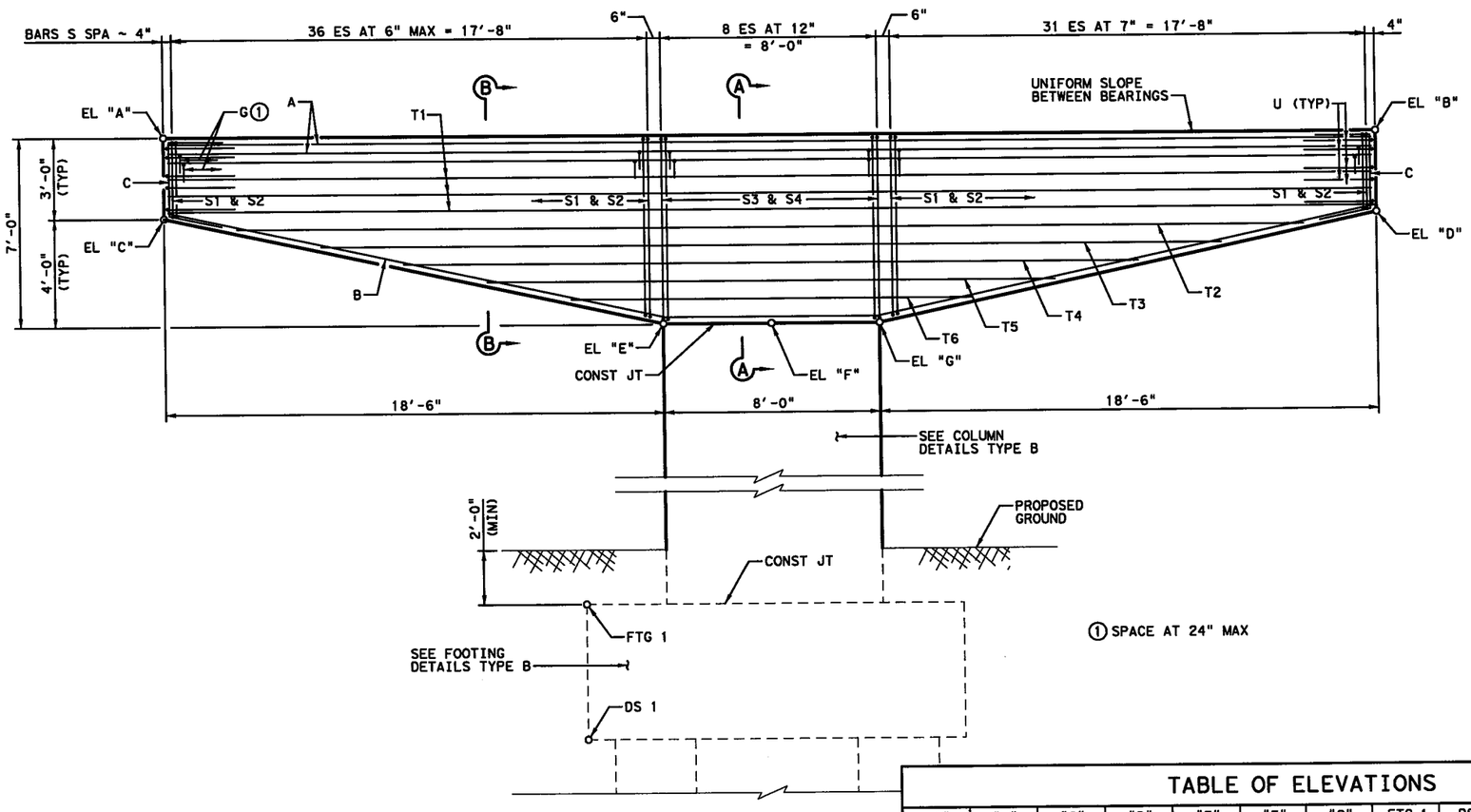

ELEVATION

TABLE OF ELEVATIONS

"A"	"B"	"C"	"D"	"E"	"F"	"G"	FTG 1	DS 1	DS TIP	AS-BUILT TIP
667.217	665.589	664.219	662.590	659.543	659.398	659.254	647.398	642.481	642.481	

TOP OF DRILLED SHAFT ELEVATIONS WERE ESTIMATED BASED ON GROUND ELEVATION INFORMATION AVAILABLE AT THE TIME OF DESIGN. CONTRACTOR SHALL CONFIRM THESE ELEVATIONS PRIOR TO DRILLING.

GENERAL NOTES:

1. DESIGNED ACCORDING TO AASHTO LRFD BRIDGE DESIGN SPECIFICATIONS, 5TH EDITION (2010).
2. CLASS "C" (HPC) CONCRETE STRENGTH F'C = 3,600 PSI.
3. ALL REINFORCING SHALL BE GRADE 60.
4. CALCULATED FOUNDATION LOAD: 455 TONS / D.S.
5. SEE BRIDGE DRAIN DETAILS FOR INFORMATION ON DRAINAGE PIPE.

STATE OF TEXAS
NESTOR R. RUBIANO
94294
LICENSED
PROFESSIONAL ENGINEER

7/06/2012

HL 93 LOADING

PESC P.E. Structural Consultants, Inc.
www.PEStructural.com
TBPE Firm No. F-1475

Texas Department of Transportation
© 2012

IH 35W FROM NORTH TARRANT PKWY TO IH 820

INTERIOR BENT NO. 7

EB US 287 TO SB IH 35W ML

SCALE: NTS — SHEET 1 OF 2

DESIGN	FED.RD. DIV.NO.	FEDERAL AID PROJECT NO.		HIGHWAY NO.
AEB	6	(SEE TITLE SHEET)		IH 35W
GRAPHICS	STATE	DISTRICT	COUNTY	SHEET NO.
TLS	TEXAS	FTW	TARRANT	1498
CHECK	CONTROL	SECTION	JOB	
NRR	0014	16	255, ETC.	
CHECK				
AB				

DRAWING DATE: 7/13/2012 FILENAME: S38BR#287E-MLS#1B#09.dgn

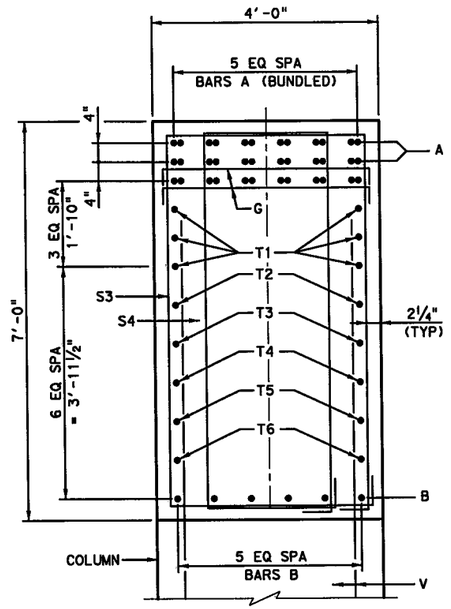

SECTION A-A

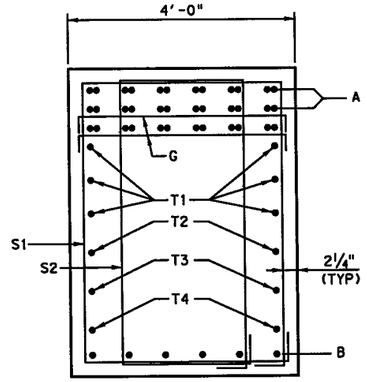

SECTION B-B

THE TOP, SIDES, AND ENDS, EXCEPT UNDER BEARING AREAS, SHALL BE TREATED WITH A "CLASS II, TYPE I PENETRATING CONCRETE SURFACE TREATMENT"

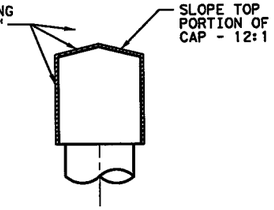

CONCRETE SURFACE TREATMENT DETAIL FOR INTERIOR BENT

TABLE OF ESTIMATED QUANTITIES

BAR	NO.	SIZE	LENGTH	WEIGHT
A	36	#11	44'-8"	8,543
B	6	#11	45'-6"	1,450
D	4	1 1/4" D	1'-8"	28
S1	69	#5	17'-5" AVG	1,253
S2	69	#5	14'-9" AVG	1,062
S3	9	#5	21'-6"	202
S4	9	#5	18'-10"	177
C	12	#5	4'-7"	57
G	48	#4	4'-5"	142
T1	6	#7	44'-8"	548
T2	2	#7	39'-6"	161
T3	2	#7	33'-4"	136
T4	2	#7	27'-3"	111
T5	2	#7	21'-0"	86
T6	2	#7	14'-10"	61
U	10	#5	8'-7"	90
REINFORCING STEEL			LB	14,107
CL C CONC (HPC) (CAP)			CY	36.1

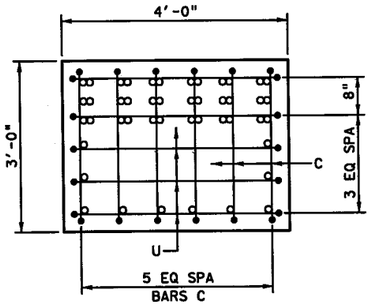

CAP END VIEW

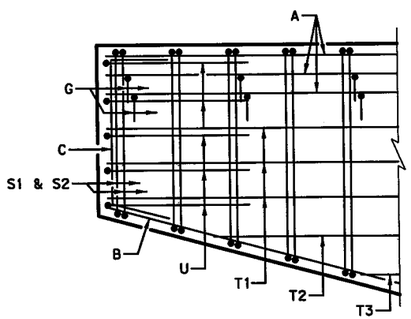

CAP END DETAIL

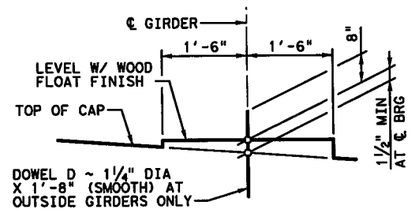

BEARING SEAT DETAIL

(BEARING SURFACE MUST BE CLEAN AND FREE OF ALL LOOSE MATERIAL BEFORE PLACING BEARING PAD.)

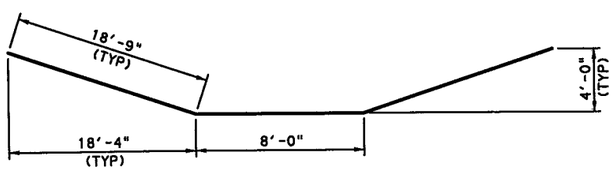

BARS B

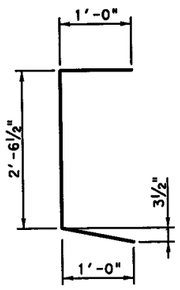

BARS C

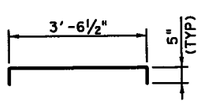

BARS G

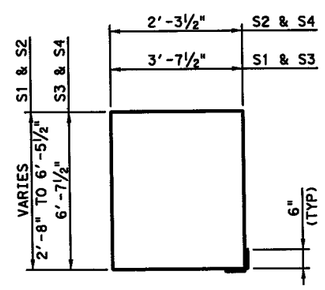

BARS S

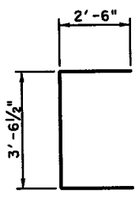

BARS U

HL 93 LOADING

PESC P.E. Structural Consultants, Inc.
www.PEStructural.com
TBPE Firm No. F-1475

Texas Department of Transportation
© 2012

IH 35W FROM NORTH TARRANT PKWY TO IH 820

INTERIOR BENT NO. 7

EB US 287 TO SB IH 35W ML

SCALE: NTS SHEET 2 OF 2

DESIGN	FED. RD. DIV. NO.	FEDERAL AID PROJECT NO.		HIGHWAY NO.
AEB	6	(SEE TITLE SHEET)		IH 35W
GRAPHICS TLS	STATE	DISTRICT	COUNTY	SHEET NO.
CHECK NRR	TEXAS	FTW	TARRANT	1499
CHECK AB	CONTROL	SECTION	JOB	
	0014	16	255, ETC.	

DRAWING DATE: 7/13/2012 FILENAME: S3BBR#287E-MLS#IB#10.dgn

TABLE OF ESTIMATED QUANTITIES ①						TOTAL ESTIMATED QUANTITIES ②	
BENT	COLUMN HEIGHT "H"	BAR H (#4) 15'-2"		BAR V 22 - #11		TOTAL REINFORCING STEEL	CL C CONC (HPC) (COLUMN)
NO.	(FT)	NO.	WEIGHT (LB)	LENGTH	WEIGHT (LB)	WEIGHT (LB)	(CY)
2	22	46	466	27' - 3"	3,185	3,651	19.6
3	28	58	588	33' - 3"	3,886	4,474	24.9

① ADJUST BARS V LENGTH BY 1 FT AND NUMBER OF BARS H BY 2 FOR EACH LINEAR FOOT OF VARIATION IN "H" VALUE.

② ADJUST REINFORCING STEEL TOTAL BY 138 LBS AND CLASS "C" CONCRETE TOTAL BY 0.889 CY FOR EACH LINEAR FOOT OF VARIATION IN "H" VALUE.

GENERAL NOTES:

1. DESIGNED ACCORDING TO AASHTO LRFD BRIDGE DESIGN SPECIFICATIONS, 5TH EDITION (2010).
2. CLASS "C" (HPC) CONCRETE STRENGTH F'C = 3,600 PSI.
3. ALL REINFORCING SHALL BE GRADE 60.

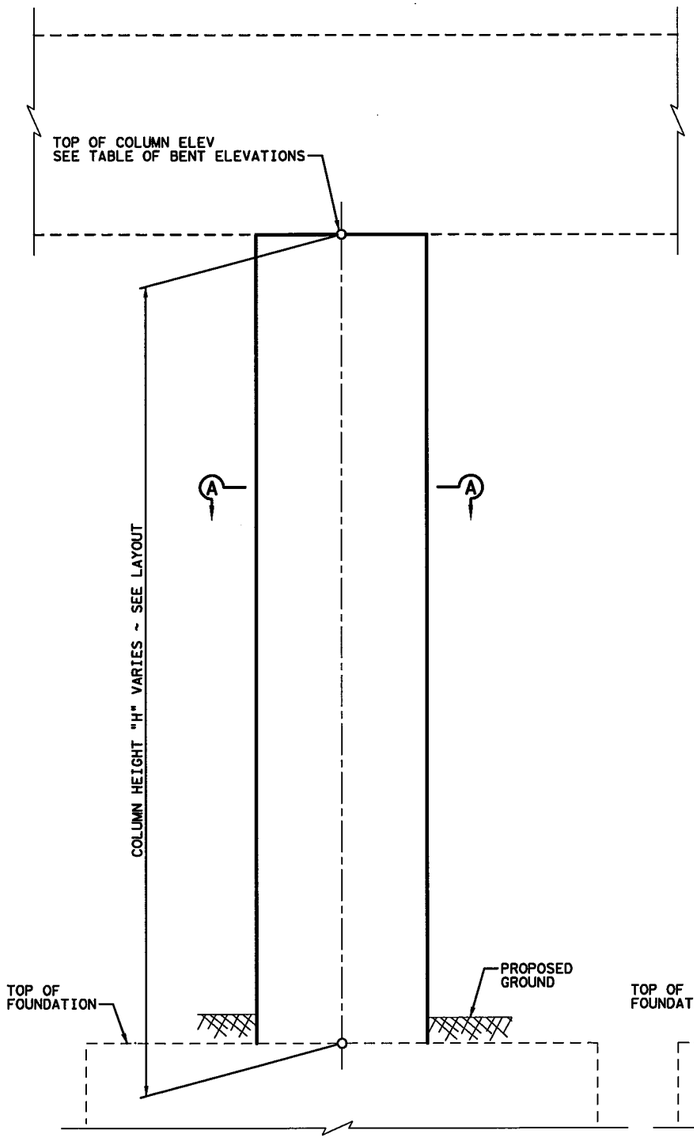

COLUMN GEOMETRY

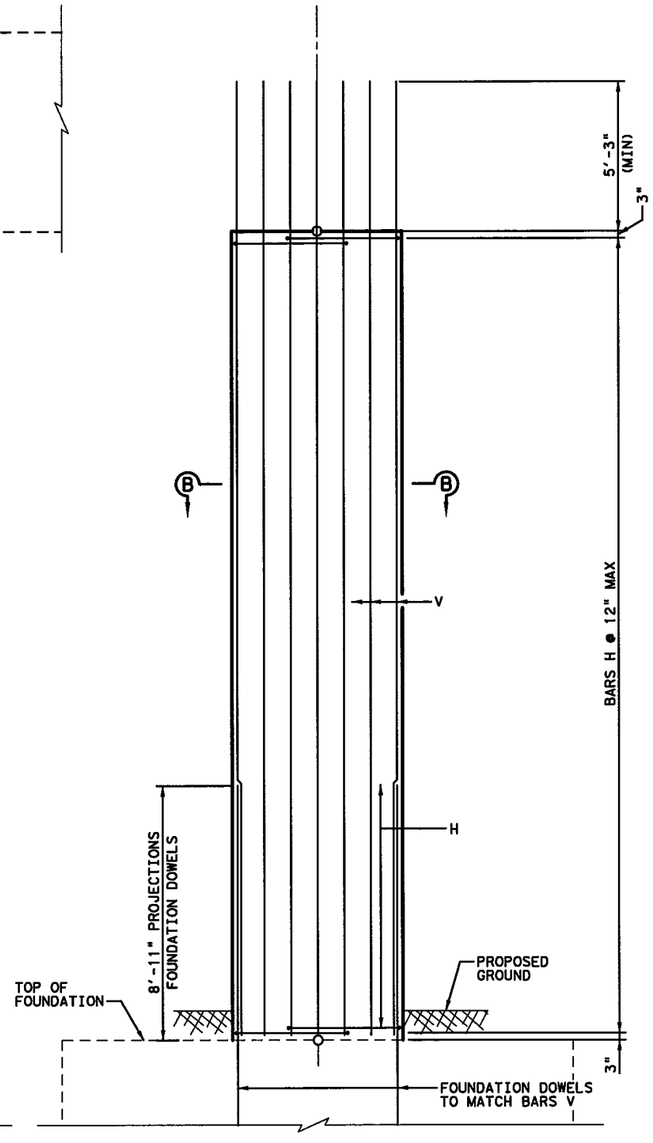

COLUMN REINFORCEMENT DETAILS

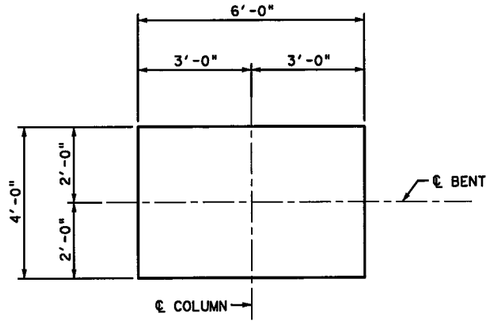

SECTION A-A

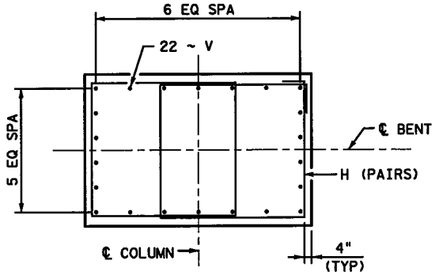

SECTION B-B

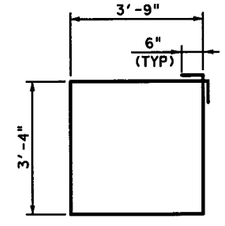

BARS H

STATE OF TEXAS
NESTOR R. RUBIANO
94294
LICENSED
PROFESSIONAL ENGINEER
8/29/2012

HL 93 LOADING

PESC P.E. Structural Consultants, Inc.
www.PEStructural.com
TBPE Firm No. F-1475

Texas Department of Transportation
© 2012

IH 35W FROM NORTH TARRANT PKWY TO IH 820

COLUMN DETAILS TYPE A

EB US 287 TO SB IH 35W ML

SCALE: NTS — SHEET 1 OF 1

DESIGN	FED. RD. DIV. NO.	FEDERAL AID PROJECT NO.		HIGHWAY NO.
AEB	6	(SEE TITLE SHEET)		IH 35W
GRAPHICS TLS	STATE	DISTRICT	COUNTY	SHEET NO.
CHECK NRR	TEXAS	FTW	TARRANT	1500
CHECK AB	CONTROL	SECTION	JOB	
	0014	16	255, ETC.	

FILENAME: S3BBR*287E-MLS*CO*01.DGN

DRAWING DATE: 7/13/2012

TABLE OF ESTIMATED QUANTITIES ①						TOTAL ESTIMATED QUANTITIES ②		
BENT	COLUMN HEIGHT "H"	BAR H (#4) 18'-8"		BAR V 36 - #11		TOTAL REINFORCING STEEL	CL C CONC (MASS PLACE) (HPC) (COLUMN)	CL F CONC (MASS) (HPC) (COLUMN)
NO.	(FT)	NO.	WEIGHT (LB)	LENGTH	WEIGHT (LB)	WEIGHT (LB)	(CY)	(CY)
5	22	46	574	27' - 3"	5,212	5,786	N/A	26.1
7	12	26	324	17' - 3"	3,299	3,623	14.2	N/A

① ADJUST BARS V LENGTH BY 1 FT AND NUMBER OF BARS H BY 2 FOR EACH LINEAR FOOT OF VARIATION IN "H" VALUE.

② ADJUST REINFORCING STEEL TOTAL BY 217 LBS AND CLASS "C" OR CLASS "F" CONCRETE TOTAL BY 1.185 CY FOR EACH LINEAR FOOT OF VARIATION IN "H" VALUE.

GENERAL NOTES:

1. DESIGNED ACCORDING TO AASHTO LRFD BRIDGE DESIGN SPECIFICATIONS, 5TH EDITION (2010).
2. CLASS "F" (HPC) CONCRETE STRENGTH F'C = 5,000 PSI FOR BENT 5 ONLY. CLASS "C" (HPC) CONCRETE STRENGTH F'C = 3,600 PSI FOR BENT 7 ONLY.
3. ALL REINFORCING SHALL BE GRADE 60.

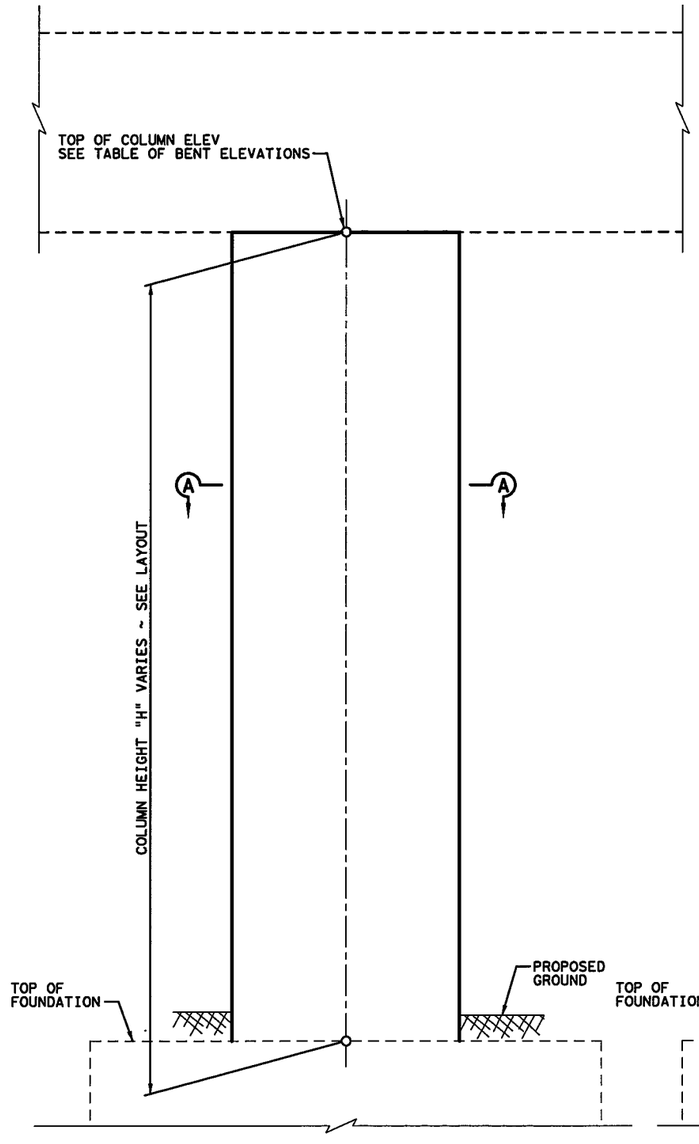

COLUMN GEOMETRY

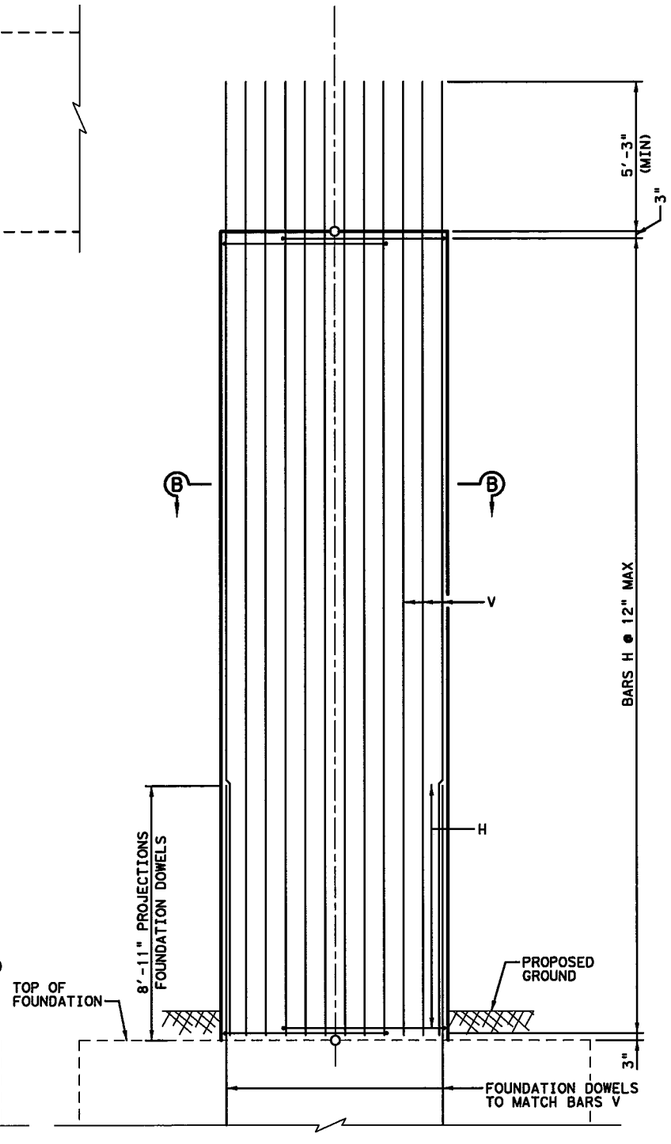

COLUMN REINFORCEMENT DETAILS

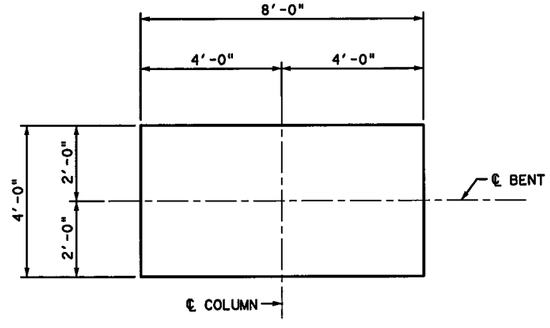

SECTION A-A

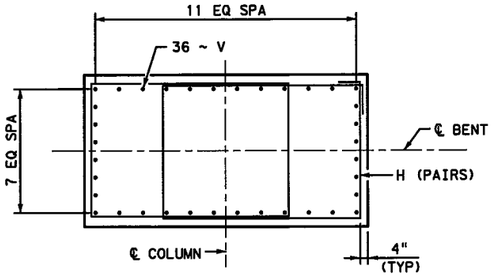

SECTION B-B

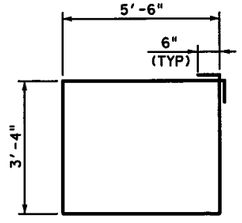

BARS H

STATE OF TEXAS
NESTOR R. RUBIANO
94294
LICENSED PROFESSIONAL ENGINEER
8/29/2012

HL 93 LOADING

PESC P.E. Structural Consultants, Inc.
www.PEStructural.com
TBPE Firm No. F-1475

Texas Department of Transportation
© 2012

IH 35W FROM NORTH TARRANT PKWY TO IH 820

COLUMN DETAILS TYPE B

EB US 287 TO SB IH 35W ML

SCALE: NTS SHEET 1 OF 1

DESIGN	FED. RD. DIV. NO.	FEDERAL AID PROJECT NO.		HIGHWAY NO.
AEB	6	(SEE TITLE SHEET)		IH 35W
GRAPHICS TLS	STATE	DISTRICT	COUNTY	SHEET NO.
CHECK NRR	TEXAS	FTW	TARRANT	1501
CHECK AB	CONTROL	SECTION	JOB	
	0014	16	255, ETC.	

FILENAME: S3BBR*287E-MLS*CO*02.dgn

DRAWING DATE: 7/13/2012

TABLE OF ESTIMATED QUANTITIES ①						TOTAL ESTIMATED QUANTITIES ②	
BENT	COLUMN HEIGHT "H"	BAR H (#4) 15'-8"		BAR V 24 - #11		TOTAL REINFORCING STEEL	CL C CONC (HPC) (COLUMN)
NO.	(FT)	NO.	WEIGHT (LB)	LENGTH	WEIGHT (LB)	WEIGHT (LB)	(CY)
6	16	34	356	21' - 3"	2,710	3,066	14.2

① ADJUST BARS V LENGTH BY 1 FT AND NUMBER OF BARS H BY 2 FOR EACH LINEAR FOOT OF VARIATION IN "H" VALUE.

② ADJUST REINFORCING STEEL TOTAL BY 149 LBS AND CLASS "C" CONCRETE TOTAL BY 0.889 CY FOR EACH LINEAR FOOT OF VARIATION IN "H" VALUE.

GENERAL NOTES:

1. DESIGNED ACCORDING TO AASHTO LRFD BRIDGE DESIGN SPECIFICATIONS, 5TH EDITION (2010).
2. CLASS "C"(HPC) CONCRETE STRENGTH F'C = 3,600 PSI.
3. ALL REINFORCING SHALL BE GRADE 60.

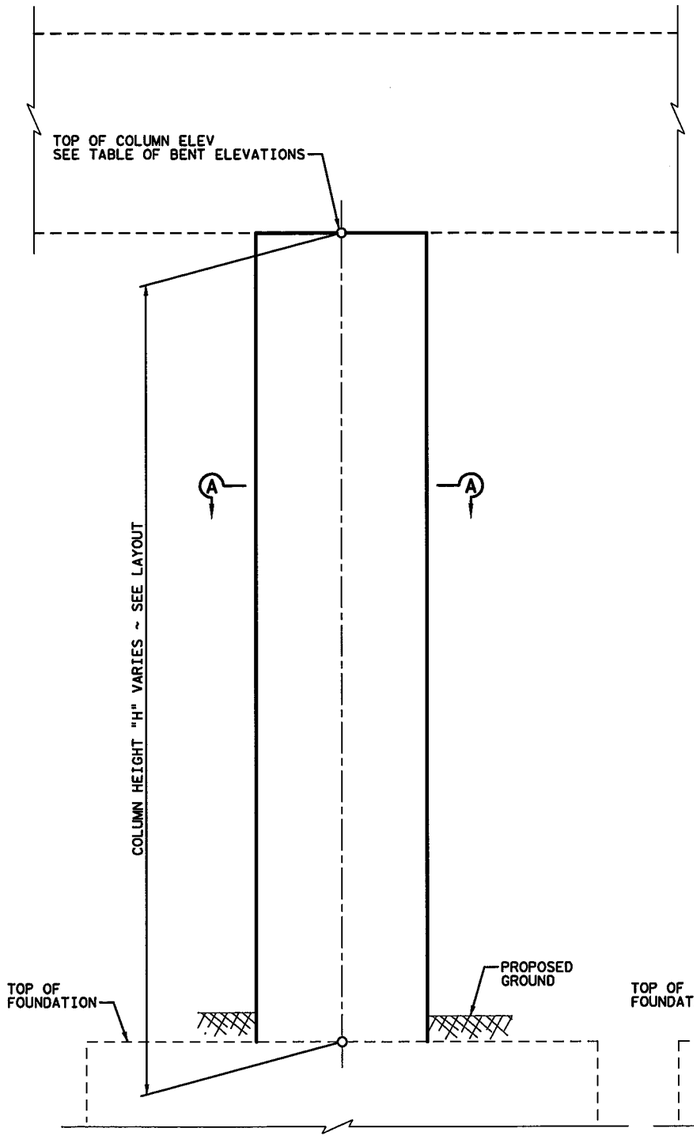

COLUMN GEOMETRY

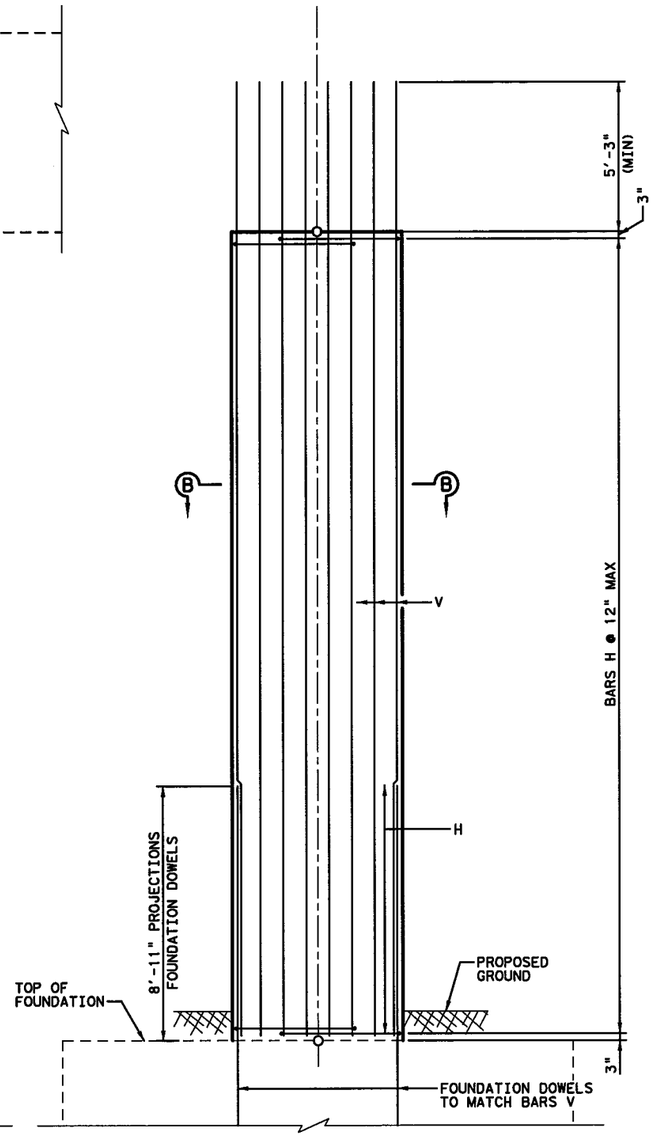

COLUMN REINFORCEMENT DETAILS

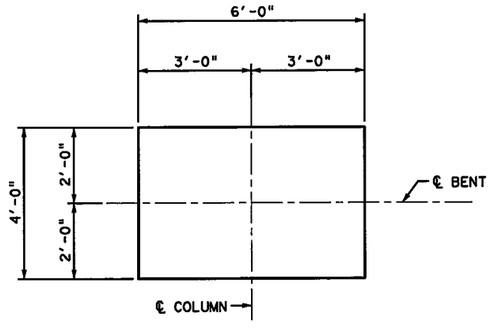

SECTION A-A

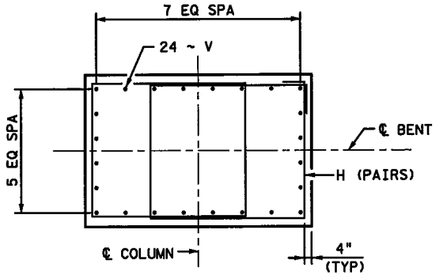

SECTION B-B

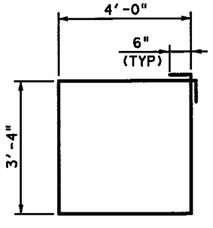

BARS H

STATE OF TEXAS
NESTOR R. RUBIANO
94294
LICENSED
PROFESSIONAL ENGINEER
8/29/2012

HL 93 LOADING

PESC
P.E. Structural Consultants, Inc.
www.PEStructural.com
TBPE Firm No. F-1475

Texas Department of Transportation
© 2012

IH 35W FROM NORTH TARRANT PKWY TO IH 820

COLUMN DETAILS TYPE C

EB US 287 TO SB IH 35W ML

SCALE: NTS — SHEET 1 OF 1

DESIGN	FED. RD. DIV. NO.	FEDERAL AID PROJECT NO.		HIGHWAY NO.
AEB	6	(SEE TITLE SHEET)		IH 35W
GRAPHICS TLS	STATE	DISTRICT	COUNTY	SHEET NO.
CHECK NRR	TEXAS	FTW	TARRANT	1502
CHECK AB	CONTROL	SECTION	JOB	
	0014	16	255, ETC.	

FILENAME: S3BBR*287E-ML.S*CO*03.dgn

DRAWING DATE: 7/13/2012

TABLE OF ESTIMATED QUANTITIES ④

BENT	COLUMN HEIGHT "H"	BAR H1 (#5) 23'-11"		BAR H2 (#5) 8'-4"		BAR H3 (#5) 5'-2"		BAR V1 22 - #14		BAR V2 24 - #14		BAR V3 5 - #14		TOTAL ESTIMATED QUANTITIES ⑤	
														TOTAL REINFORCING STEEL	CL F CONC (MASS) (HPC) (COLUMN)
NO.	(FT)	NO.	WEIGHT (LB)	NO.	WEIGHT (LB)	NO.	WEIGHT (LB)	LENGTH	WEIGHT (LB)	LENGTH	WEIGHT (LB)	LENGTH	WEIGHT (LB)	WEIGHT (LB)	(CY)
4L	28	56	1,397	112	973	168	905	28' - 0"	4,712	33' - 1"	6,074	31' - 1"	1,189	15,250	40.8
4R	30	60	1,497	120	1,043	180	970	30' - 0"	5,049	35' - 1"	6,441	33' - 1"	1,265	16,265	43.7

④ ADJUST BARS V LENGTH BY 1 FT, NUMBER OF BARS H1 BY 1, NUMBER OF BARS H2 BY 2 AND NUMBER OF BARS H3 BY 3 FOR EACH LINEAR FOOT OF VARIATION IN "H" VALUE.

⑤ ADJUST REINFORCING STEEL TOTAL BY 489 LBS AND CLASS "F" CONCRETE TOTAL BY 1.457 CY FOR EACH LINEAR FOOT OF VARIATION IN "H" VALUE.

GENERAL NOTES:

1. DESIGNED ACCORDING TO AASHTO LRFD BRIDGE DESIGN SPECIFICATIONS, 5TH EDITION (2010).
2. CLASS "F" (HPC) CONCRETE STRENGTH F'C = 5,000 PSI.
3. ALL REINFORCING SHALL BE GRADE 60.

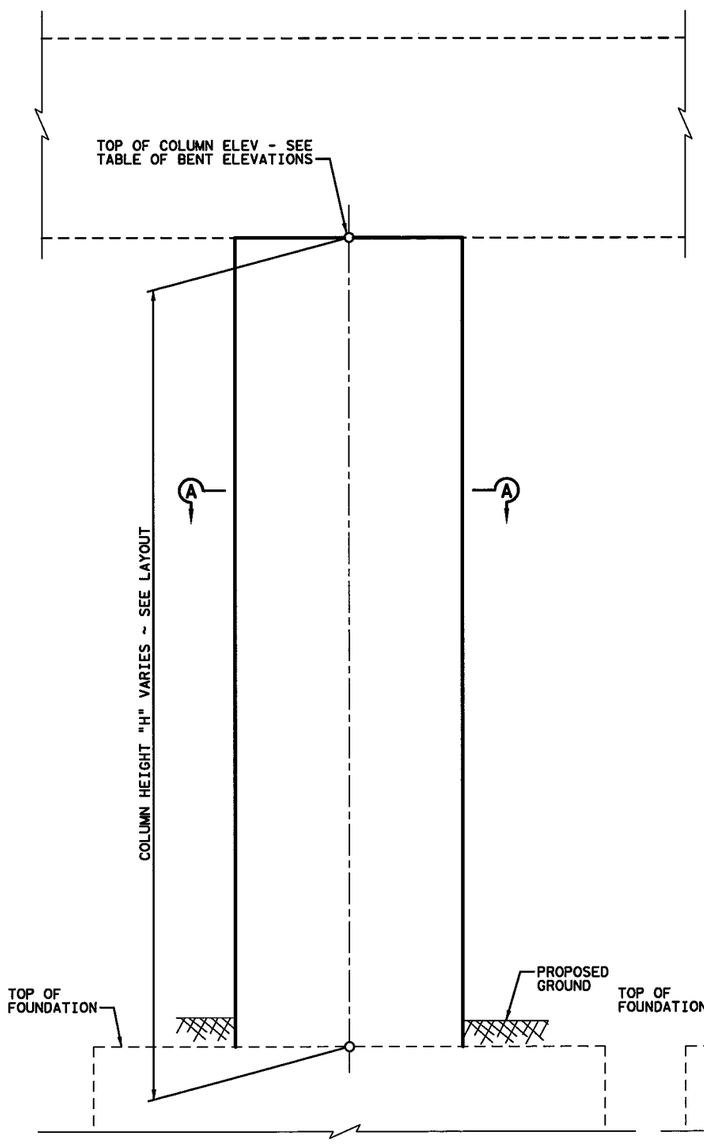

COLUMN GEOMETRY

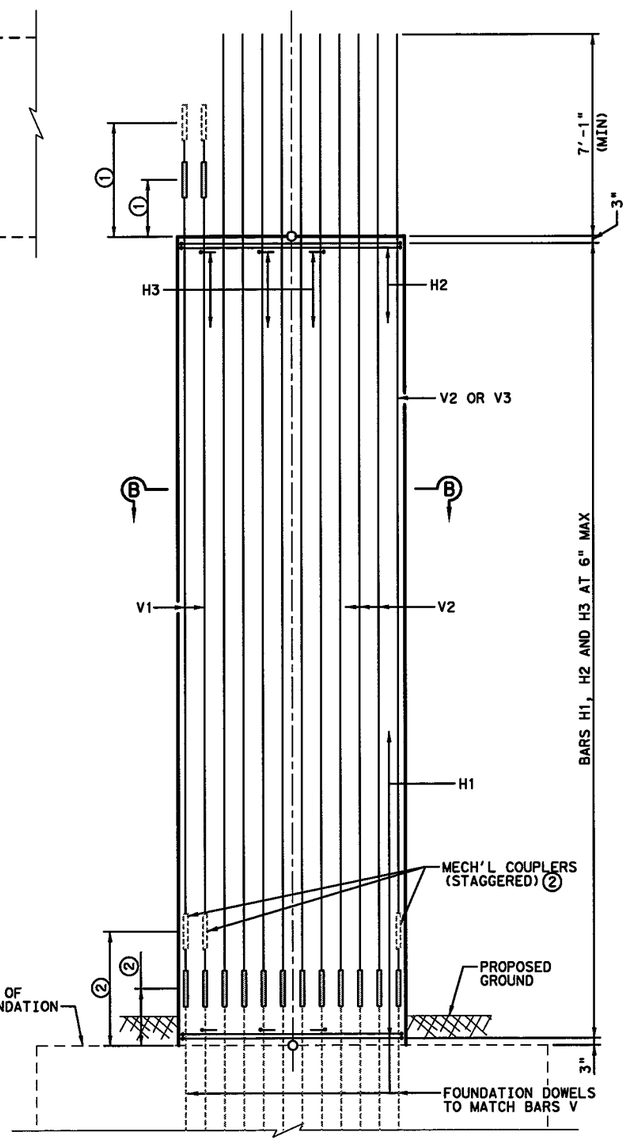

COLUMN REINFORCEMENT DETAILS

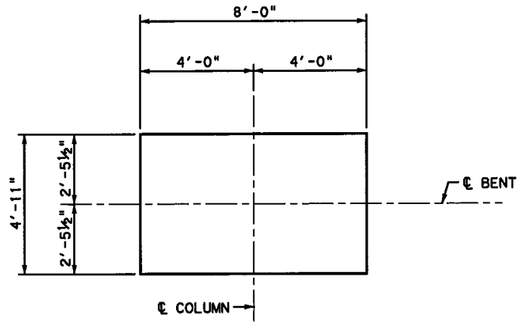

SECTION A-A

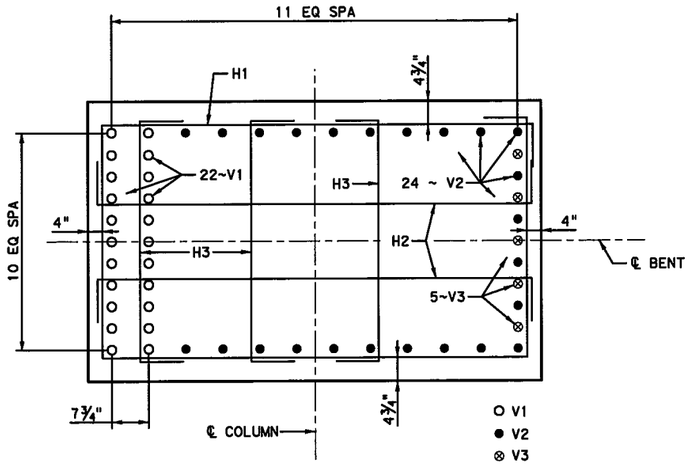

SECTION B-B

(LEFT COLUMN SHOWN, RIGHT COLUMN IS MIRRORED IMAGE)

① SEE INTERIOR BENT NO. 4 SHEETS FOR PROJECTION LENGTH

② SEE FOOTING TYPE D FOR PROJECTION LENGTH

③ ADJUST SIZE OF STIRRUP AS REQUIRED AT MECHANICAL COUPLERS

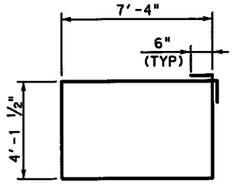

BARS H1 ③

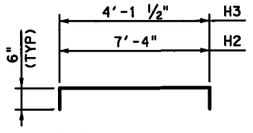

BARS H2 & H3

HL 93 LOADING

P.E. Structural Consultants, Inc.
www.PEStructural.com
TBPE Firm No. F-1475

Texas Department of Transportation

© 2012

IH 35W FROM NORTH TARRANT PKWY TO IH 820

COLUMN DETAILS TYPE D

EB US 287 TO SB IH 35W ML

SCALE: NTS — SHEET 1 OF 1

DESIGN	FED. RD. DIV. NO.	FEDERAL AID PROJECT NO.		HIGHWAY NO.
AEB	6	(SEE TITLE SHEET)		IH 35W
GRAPHICS TLS	STATE	DISTRICT	COUNTY	SHEET NO.
CHECK NRR	TEXAS	FTW	TARRANT	1503
CHECK AB	CONTROL	SECTION	JOB	
	0014	16	255, ETC.	

DRAWING DATE: 7/13/2012 FILENAME: S3BBR*287E-ML*CO*04.dgn

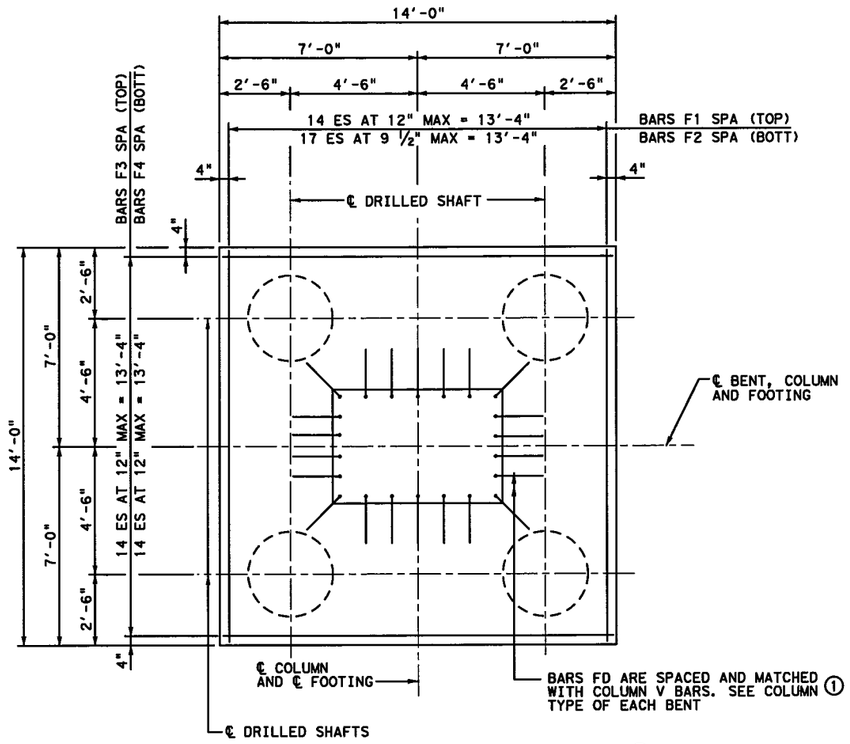

PLAN

① LOCATION OF THE VERTICAL LEGS OF BARS FD SHALL MATCH THE COLUMN BARS V AS DETAILED IN SECTION B-B OF THE COLUMN DETAILS SHEET. AT BOTTOM OF COLUMN, PLACE COLUMN BARS V INSIDE BARS FD AS REQUIRED TO ENSURE 3" MINIMUM CLEAR SPACING BETWEEN LAP SPLICES. AT THE TOP END OF THE LAP SPLICES, BEND COLUMN BARS V OUTWARD AT A SLOPE OF 6 V : 1 H TO BRING COLUMN BARS BACK TO THEIR NORMAL POSITION AS DETAILED IN SECTION B-B OF THE COLUMN DETAILS SHEET.

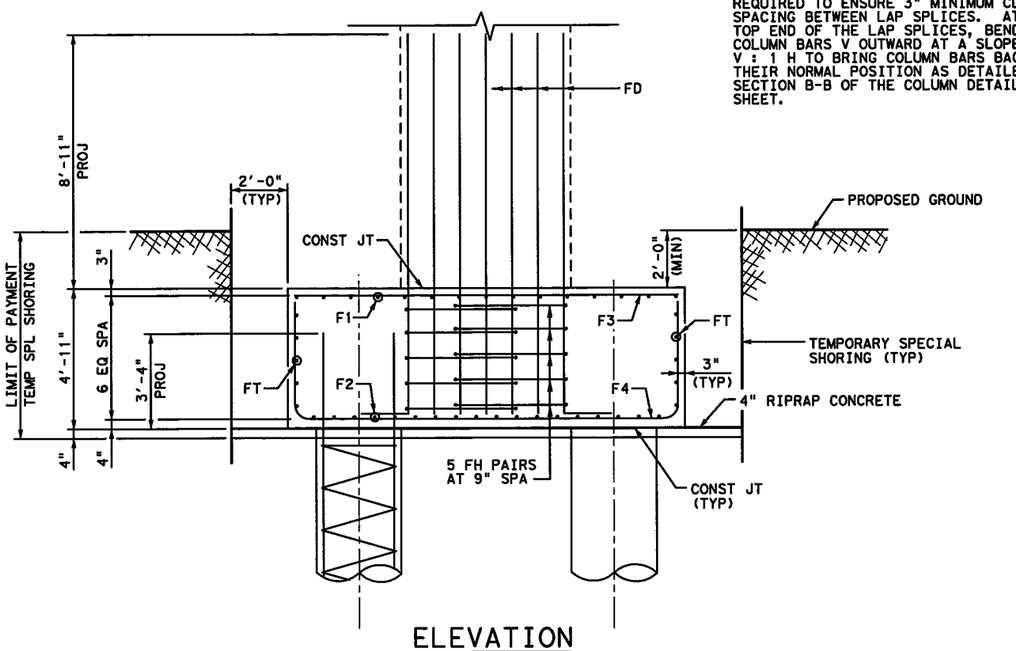

ELEVATION

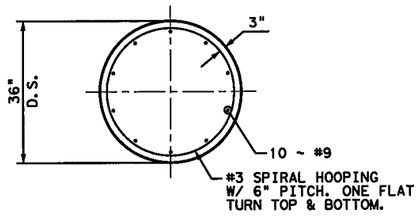

TYPICAL DRILLED SHAFT SECTION

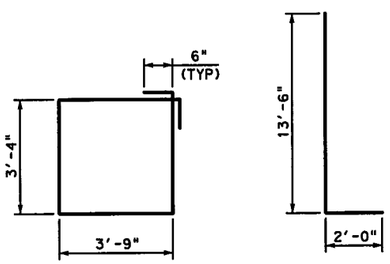

TABLE OF ESTIMATED QUANTITIES
(PER FOOTING)

BAR	NO.	SIZE	LENGTH	WEIGHT
F1	15	#11	13'-8"	1,089
F2	18	#11	22'-4"	2,136
F3	15	#11	13'-8"	1,089
F4	15	#11	22'-4"	1,780
FD	22	#11	15'-6"	1,812
FH	10	#5	15'-2"	158
FT	20	#7	13'-8"	559

REINFORCING STEEL	LB	8,623
CL C CONC (FOOTING) (MASS)	CY	35.7
RIPRAP (CONC) (4 IN)	CY	3.7
TEMPORARY SPL SHORING	SF	521.7

GENERAL NOTES:

1. DESIGNED ACCORDING TO AASHTO LRFD BRIDGE DESIGN SPECIFICATIONS, 5TH EDITION (2010).
2. CLASS "C" CONCRETE STRENGTH F'C = 3,600 PSI.
3. FOOTING AND DRILLED SHAFT REINFORCING BARS SHALL BE GRADE 60.

HL 93 LOADING

PESC P.E. Structural Consultants, Inc.
www.PEStructural.com
TBPE Firm No. F-1475

Texas Department of Transportation
© 2012

IH 35W FROM NORTH TARRANT PKWY TO IH 820

FOOTING DETAILS TYPE A

EB US 287 TO SB IH 35W ML

SCALE: NTS — SHEET 1 OF 1

DESIGN	FED.RD. DIV.NO.	FEDERAL AID PROJECT NO.		HIGHWAY NO.
AEB	6	(SEE TITLE SHEET)		IH 35W
GRAPHICS TLS	STATE	DISTRICT	COUNTY	SHEET NO.
CHECK NRR	TEXAS	FTW	TARRANT	1504
CHECK AB	CONTROL	SECTION	JOB	
	0014	16	255, ETC.	

DRAWING DATE: 7/13/2012 FILENAME: S3BBR#287E-MLS#FT#01.DGN

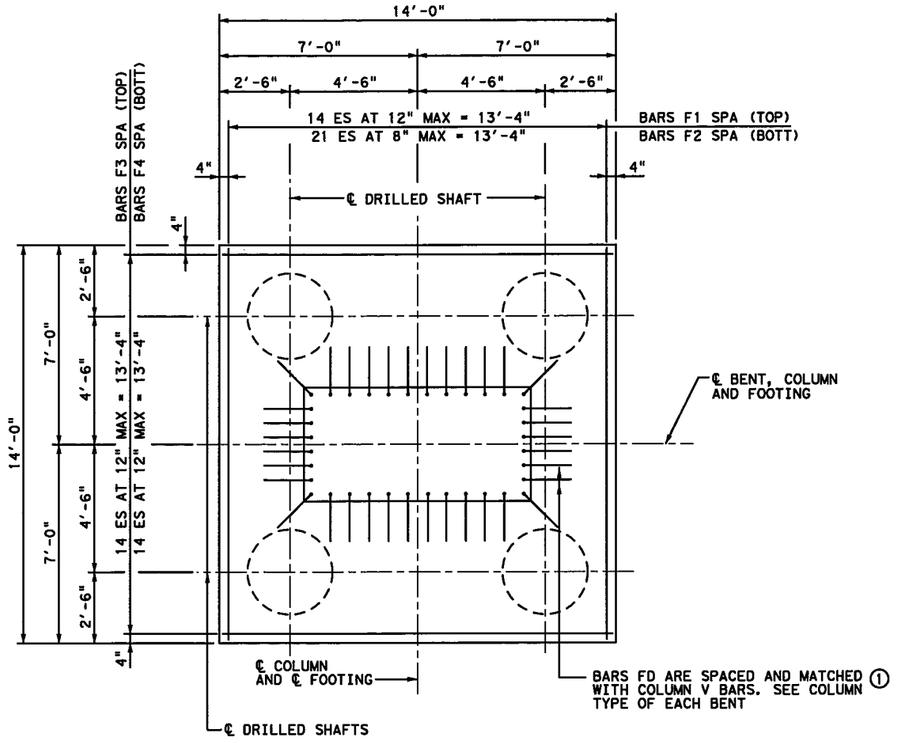

PLAN

① LOCATION OF THE VERTICAL LEGS OF BARS FD SHALL MATCH THE COLUMN BARS V AS DETAILED IN SECTION B-B OF THE COLUMN DETAILS SHEET. AT BOTTOM OF COLUMN, PLACE COLUMN BARS V INSIDE BARS FD AS REQUIRED TO ENSURE 3" MINIMUM CLEAR SPACING BETWEEN LAP SPLICES. AT THE TOP END OF THE LAP SPLICES, BEND COLUMN BARS V OUTWARD AT A SLOPE OF 6 V : 1 H TO BRING COLUMN BARS BACK TO THEIR NORMAL POSITION AS DETAILED IN SECTION B-B OF THE COLUMN DETAILS SHEET.

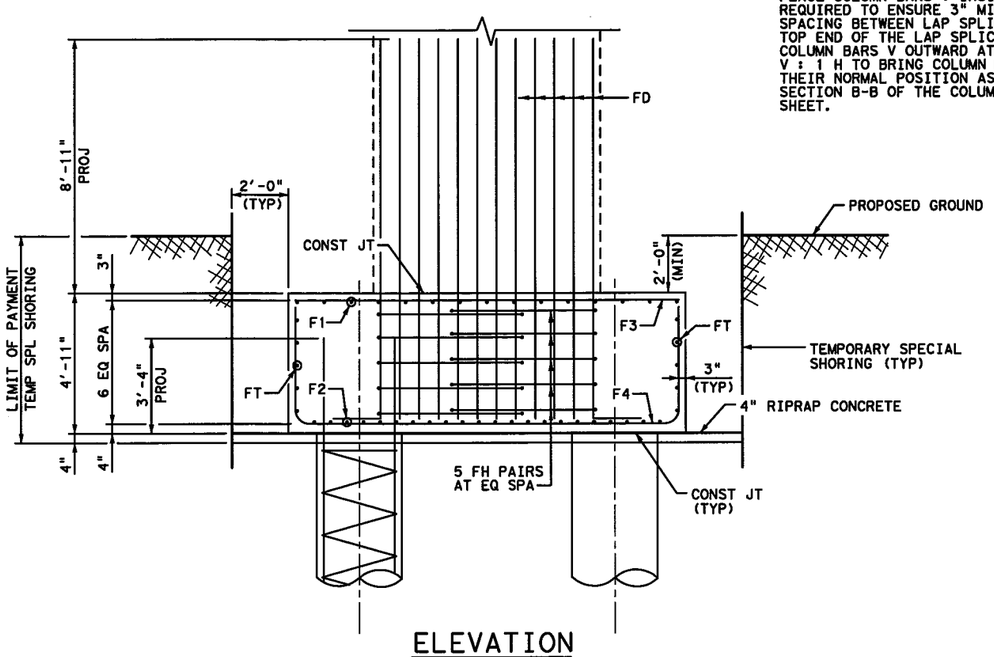

ELEVATION

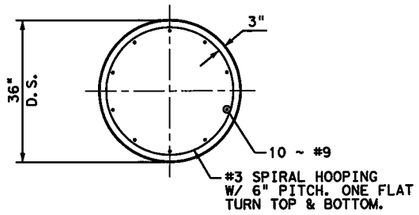

TYPICAL DRILLED SHAFT SECTION

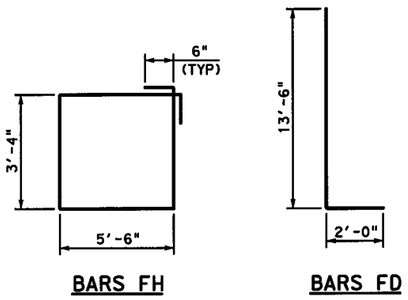

BARS FH

BARS FD

BARS F2 & F4

TABLE OF ESTIMATED QUANTITIES
(PER FOOTING)

BAR	NO.	SIZE	LENGTH	WEIGHT
F1	15	#11	13'-8"	1,089
F2	22	#11	22'-4"	2,610
F3	15	#11	13'-8"	1,089
F4	15	#11	22'-4"	1,780
FD	36	#11	15'-6"	2,965
FH	10	#5	18'-8"	195
FT	20	#7	13'-8"	559

REINFORCING STEEL	LB	10,287
CL C CONC (FOOTING) (MASS)	CY	35.7
RIPRAP (CONC) (4 IN)	CY	3.7
TEMPORARY SPL SHORING	SF	521.6

GENERAL NOTES:

1. DESIGNED ACCORDING TO AASHTO LRFD BRIDGE DESIGN SPECIFICATIONS, 5TH EDITION (2010).
2. CLASS "C" CONCRETE STRENGTH F'C = 3,600 PSI.
3. FOOTING AND DRILLED SHAFT REINFORCING BARS SHALL BE GRADE 60.

HL 93 LOADING

P.E. Structural Consultants, Inc.
www.PEStructural.com
TBPE Firm No. F-1475

Texas Department of Transportation
© 2012

IH 35W FROM NORTH TARRANT PKWY TO IH 820

FOOTING DETAILS TYPE B

EB US 287 TO SB IH 35W ML

SCALE: NTS SHEET 1 OF 1

DESIGN	FED.RD. DIV.NO.	FEDERAL AID PROJECT NO.		HIGHWAY NO.
AEB	6	(SEE TITLE SHEET)		IH 35W
GRAPHICS TLS	STATE	DISTRICT	COUNTY	SHEET NO.
CHECK NRR	TEXAS	FTW	TARRANT	1505
CHECK AB	CONTROL	SECTION	JOB	
	0014	16	255, ETC.	

DRAWING DATE: 7/13/2012 FILENAME: S38BR#287E-MLS#FT#02.dgn

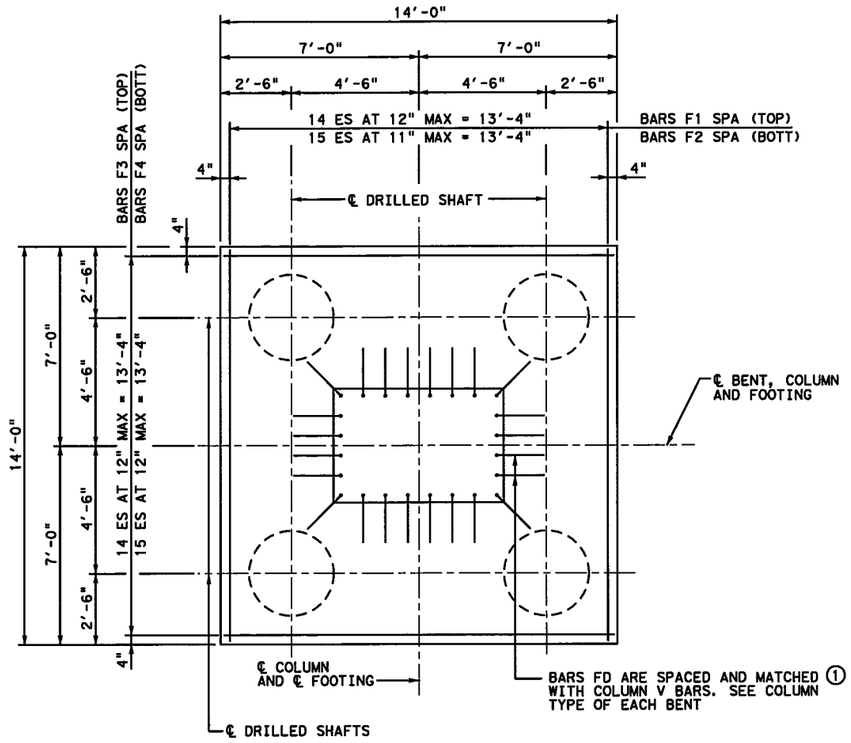

PLAN

① LOCATION OF THE VERTICAL LEGS OF BARS FD SHALL MATCH THE COLUMN BARS V AS DETAILED IN SECTION B-B OF THE COLUMN DETAILS SHEET. AT BOTTOM OF COLUMN, PLACE COLUMN BARS V INSIDE BARS FD AS REQUIRED TO ENSURE 3" MINIMUM CLEAR SPACING BETWEEN LAP SPLICES. AT THE TOP END OF THE LAP SPLICES, BEND COLUMN BARS V OUTWARD AT A SLOPE OF 6 V : 1 H TO BRING COLUMN BARS BACK TO THEIR NORMAL POSITION AS DETAILED IN SECTION B-B OF THE COLUMN DETAILS SHEET.

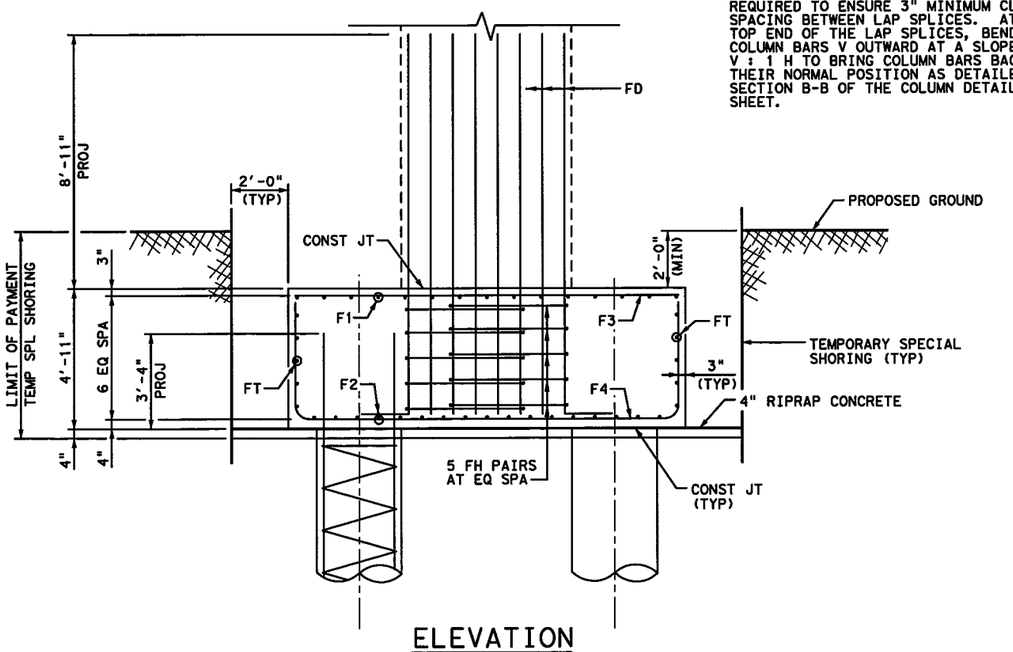

ELEVATION

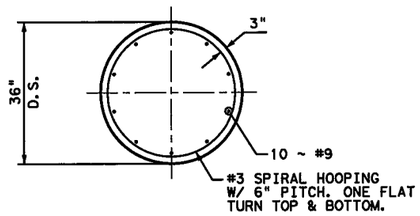

TYPICAL DRILLED SHAFT SECTION

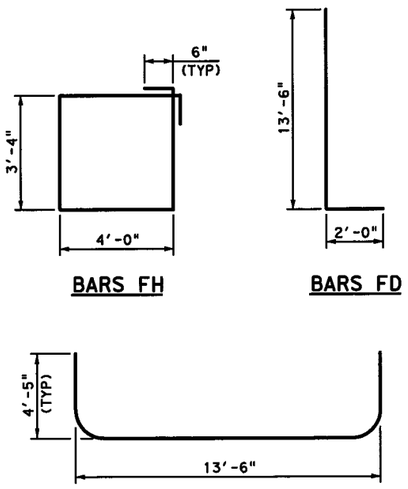

TABLE OF ESTIMATED QUANTITIES
(PER FOOTING)

BAR	NO.	SIZE	LENGTH	WEIGHT
F1	15	#11	13'-8"	1,089
F2	16	#11	22'-4"	1,899
F3	15	#11	13'-8"	1,089
F4	16	#11	22'-4"	1,899
FD	40	#11	15'-6"	3,294
FH	10	#5	15'-8"	163
FT	20	#7	13'-8"	559

REINFORCING STEEL	LB	9,992
CL C CONC (FOOTING) (MASS)	CY	35.7
RIPRAP (CONC) (4 IN)	CY	3.7
TEMPORARY SPL SHORING	SF	521.7

GENERAL NOTES:

1. DESIGNED ACCORDING TO AASHTO LRFD BRIDGE DESIGN SPECIFICATIONS, 5TH EDITION (2010).
2. CLASS "C" CONCRETE STRENGTH F'C = 3,600 PSI.
3. FOOTING AND DRILLED SHAFT REINFORCING BARS SHALL BE GRADE 60.

HL 93 LOADING

P.E. Structural Consultants, Inc.
www.PEStructural.com
TBPE Firm No. F-1475

Texas Department of Transportation
© 2012

IH 35W FROM NORTH TARRANT PKWY TO IH 820

FOOTING DETAILS TYPE C

EB US 287 TO SB IH 35W ML

SCALE: NTS — SHEET 1 OF 1

DESIGN	FED. RD. DIV. NO.	FEDERAL AID PROJECT NO.		HIGHWAY NO.
AEB	6	(SEE TITLE SHEET)		IH 35W
GRAPHICS TLS	STATE	DISTRICT	COUNTY	SHEET NO.
CHECK NRR	TEXAS	FTW	TARRANT	1506
CHECK AB	CONTROL	SECTION	JOB	
	0014	16	255, ETC.	

FILENAME: S38BR#287E-MLS#FT#03.dgn
DRAWING DATE: 7/13/2012

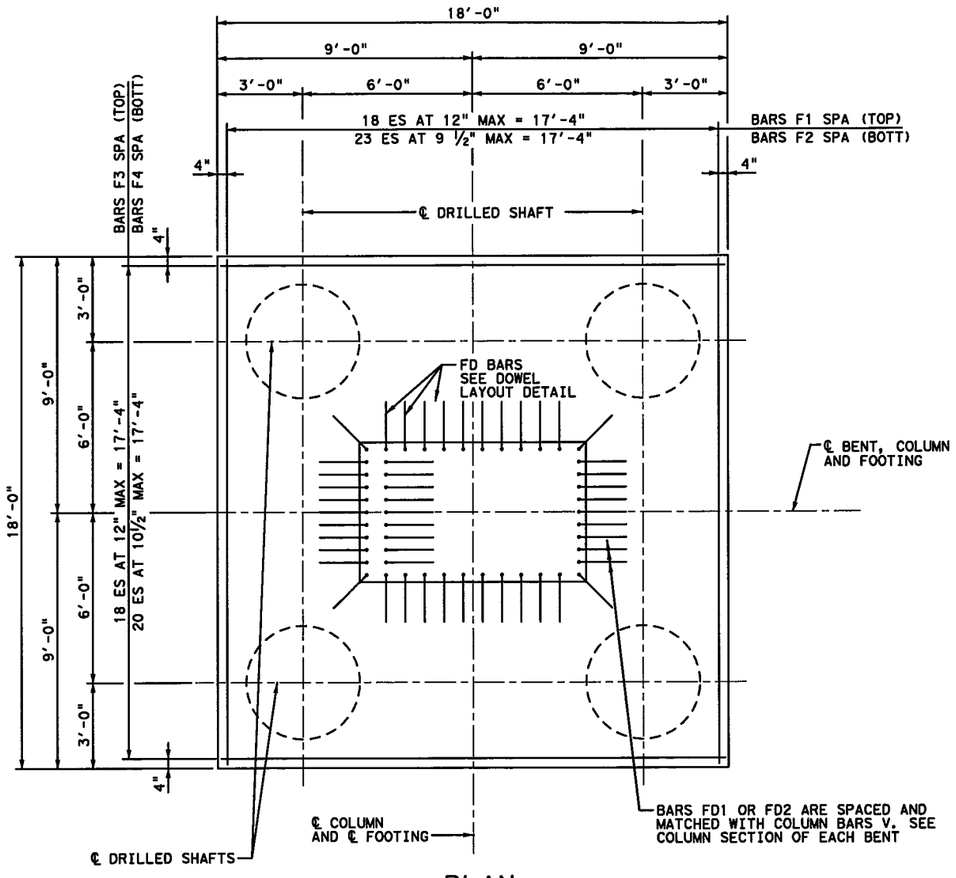

PLAN

(LEFT FOOTING SHOWN,
RIGHT FOOTING IS MIRRORED IMAGE)

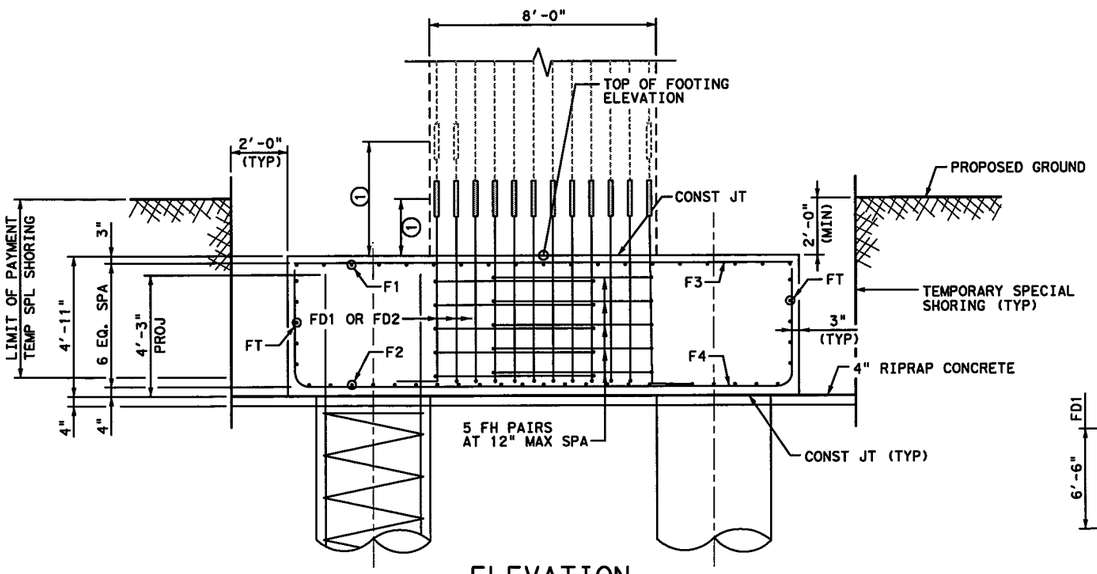

ELEVATION

① SEE MECH COUPLER STAGGERING DETAIL

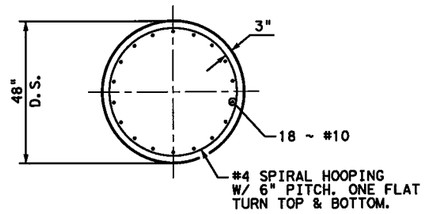

TYPICAL DRILLED SHAFT SECTION

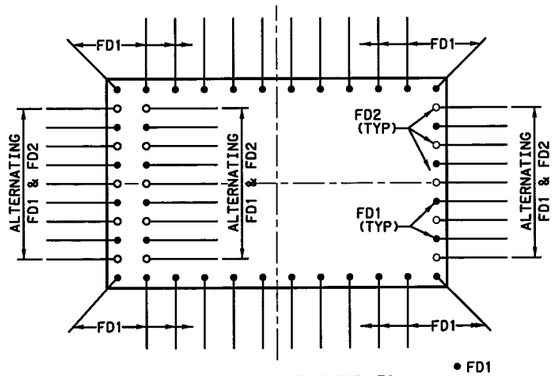

DOWEL LAYOUT DETAIL

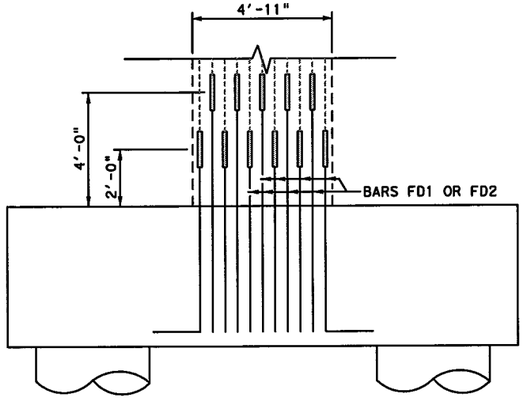

MECH COUPLER STAGGERING DETAIL

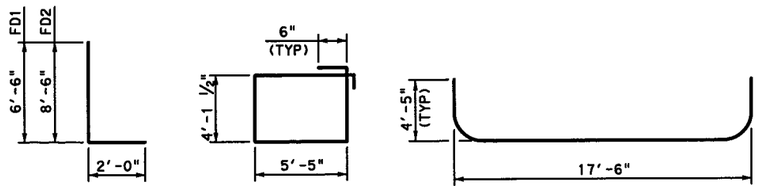

TABLE OF ESTIMATED QUANTITIES
(PER FOOTING)

BAR	NO.	SIZE	LENGTH	WEIGHT
F1	19	#11	17'-8"	1,783
F2	24	#11	26'-4"	3,358
F3	19	#11	17'-8"	1,783
F4	21	#11	26'-4"	2,938
FD1	36	#11	8'-6"	1,626
FD2	15	#11	10'-6"	837
FH	10	#5	20'-1"	209
FT	20	#7	17'-8"	722

REINFORCING STEEL	LB	13,256
CL C CONC (FOOTING) (MASS)	CY	59.0
RIPRAP (CONC) (4 IN)	CY	5.4
TEMPORARY SPL SHORING	SF	637.5

GENERAL NOTES:

1. DESIGNED ACCORDING TO AASHTO LRFD BRIDGE DESIGN SPECIFICATIONS, 5TH EDITION (2010).
2. CLASS "C" CONCRETE STRENGTH F'C = 3,600 PSI.
3. FOOTING AND DRILLED SHAFT REINFORCING BARS SHALL BE GRADE 60.

STATE OF TEXAS
NESTOR R. RUBIANO
94294
LICENSED
PROFESSIONAL ENGINEER
8/29/2012

HL 93 LOADING

P.E. Structural Consultants, Inc.
www.PEStructural.com
TBPE Firm No. F-1475

Texas Department of Transportation
© 2012

IH 35W FROM NORTH TARRANT PKWY TO IH 820

FOOTING DETAILS TYPE D

EB US 287 TO SB IH 35W ML

SCALE: NTS — SHEET 1 OF 1

DESIGN	FED.RD. DIV.NO.	FEDERAL AID PROJECT NO.		HIGHWAY NO.
AEB	6	(SEE TITLE SHEET)		IH 35W
GRAPHICS TLS	STATE	DISTRICT	COUNTY	SHEET NO.
CHECK NRR	TEXAS	FTW	TARRANT	1507
CHECK AB	CONTROL	SECTION	JOB	
	0014	16	255, ETC.	

DRAWING DATE: 7/13/2012 FILENAME: S3BBR#287E-MLS#FT#04.dgn

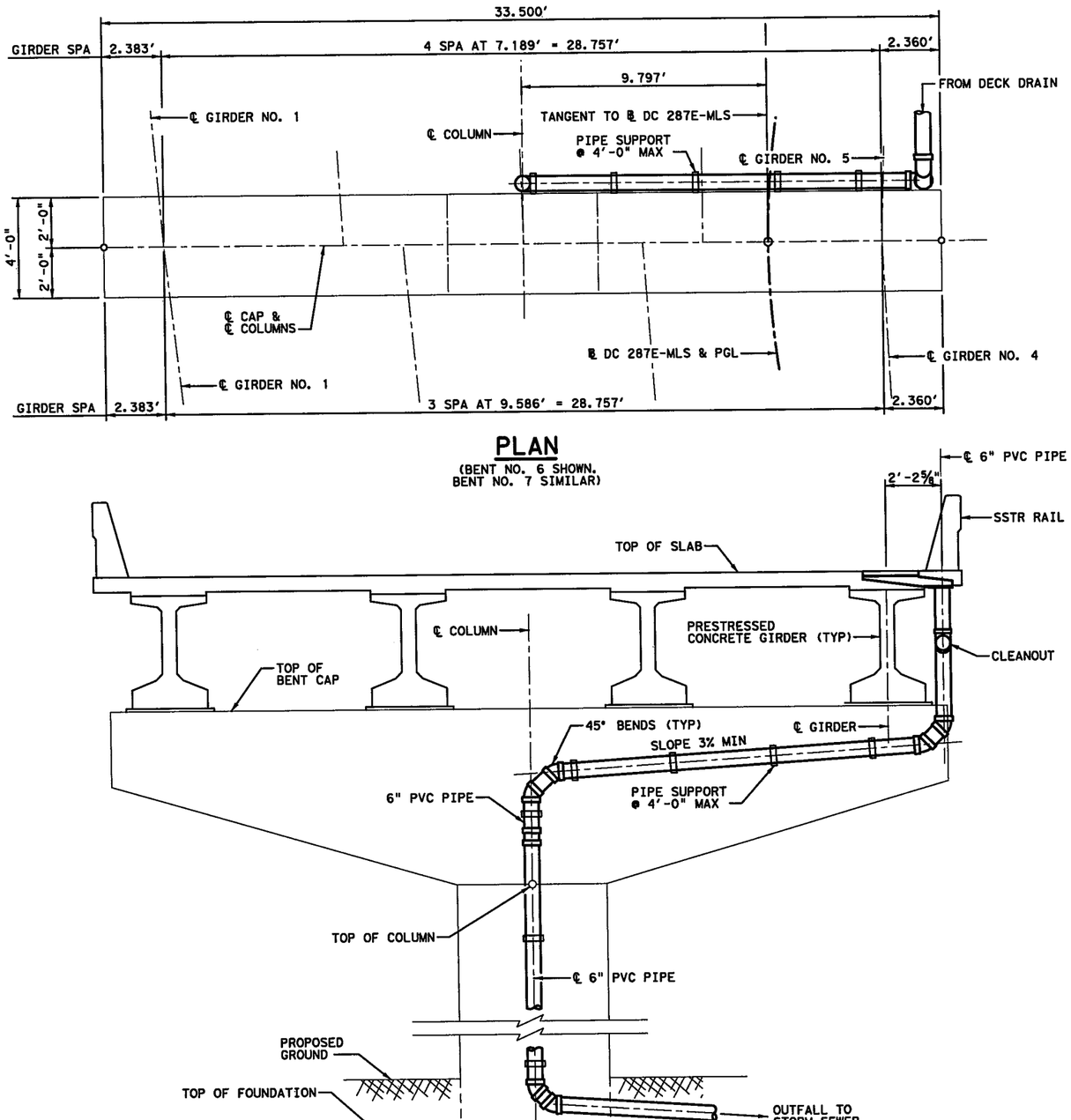

PLAN

(BENT NO. 6 SHOWN.
BENT NO. 7 SIMILAR)

ELEVATION

(BENT NO. 6 SHOWN.
BENT NO. 7 SIMILAR)

GENERAL NOTES:

1. A TEMPORARY PLUG SHALL BE PLACED IN ANY OPEN PIPES AND SHALL REMAIN UNTIL GRATE INLET AND ALL PIPING ARE INSTALLED.
2. THE ENTIRE DRAIN SYSTEM FOR EACH SPAN SHALL BE FULLY CONNECTED AND OPERATIONAL PRIOR TO PLACEMENT OF RAILS ON SPANS.
3. ALL PIPE BENDS SHALL BE 45° MAXIMUM.
4. SEE BD-3(MOD) STANDARD FOR DRAIN DETAILS.

STATE OF TEXAS
NESTOR R. RUBIANO
94294
LICENSED
PROFESSIONAL ENGINEER

7/06/2012

HL 93 LOADING

PESC P.E. Structural Consultants, Inc.
www.PEStructural.com
TBPE Firm No. F-1475

Texas Department of Transportation
© 2012

IH 35W FROM NORTH TARRANT PKWY TO IH 820

BRIDGE DRAIN DETAILS

EB US 287 TO SB IH 35W ML

SCALE: NTS

SHEET 1 OF 3

DESIGN	FED. RD. DIV. NO.	FEDERAL AID PROJECT NO.		HIGHWAY NO.
AEB	6	(SEE TITLE SHEET)		IH 35W
GRAPHICS TLS	STATE	DISTRICT	COUNTY	SHEET NO.
CHECK NRR	TEXAS	FTW	TARRANT	1508
CHECK AB	CONTROL	SECTION	JOB	
	0014	16	255, ETC.	

DRAWING DATE: 7/13/2012 FILENAME: S3BBR*287E-MLS*DR*01.dgn

NOTES:

1. FOR GENERAL NOTES SEE SHEET 1 OF 3.

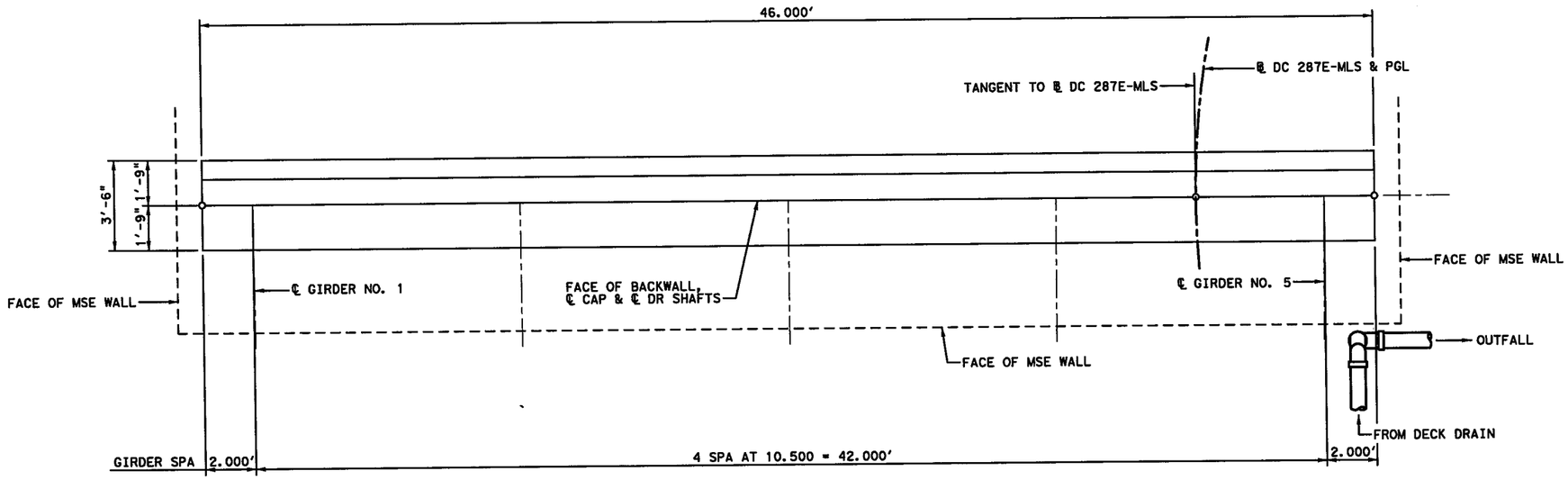

PLAN
(ABUTMENT NO. 8)

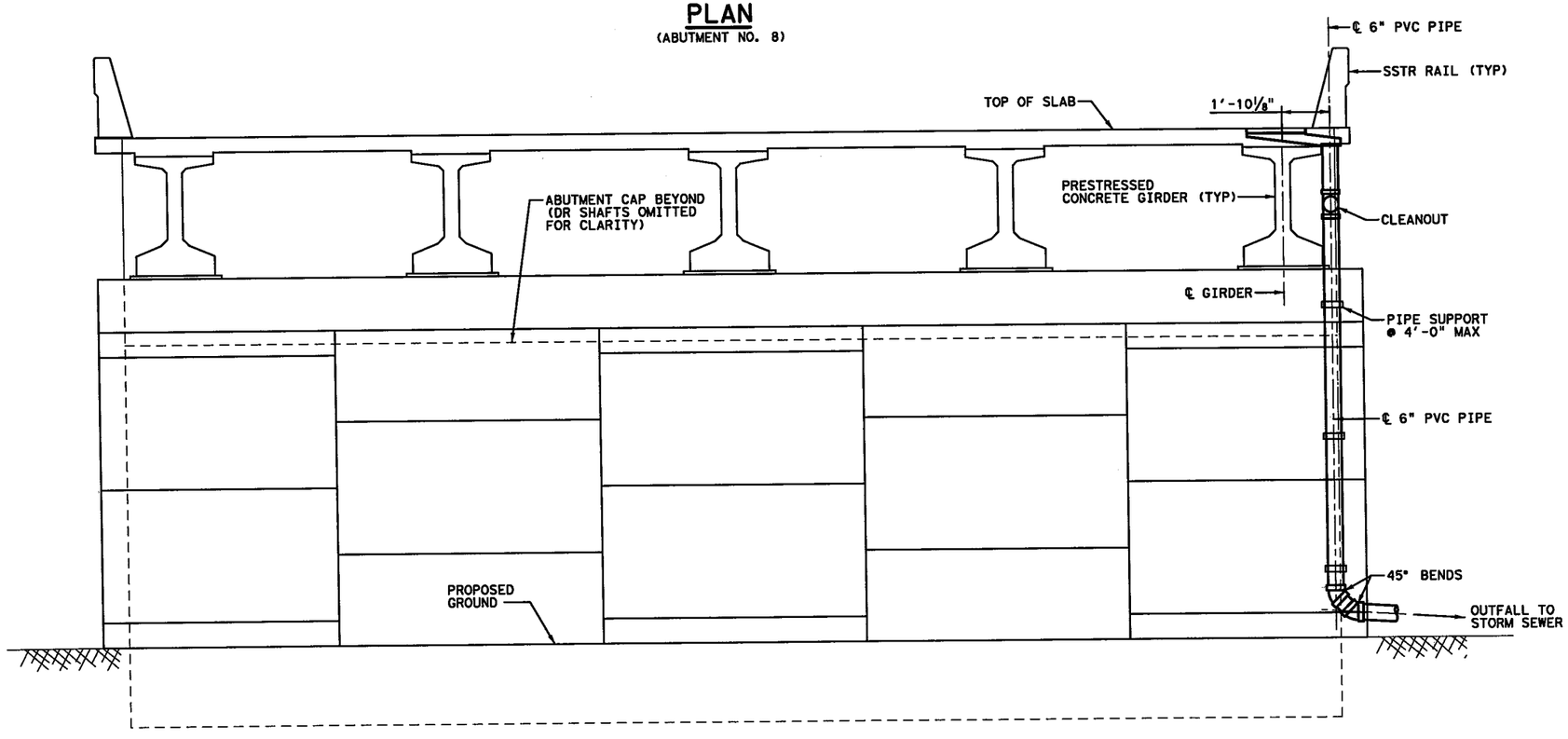

ELEVATION
(ABUTMENT NO. 8)

STATE OF TEXAS
NESTOR R. RUBIANO
94294
LICENSED PROFESSIONAL ENGINEER

7/06/2012

HL 93 LOADING

PESC P.E. Structural Consultants, Inc.
www.PEStructural.com
TBPE Firm No. F-1475

Texas Department of Transportation

© 2012

IH 35W FROM NORTH TARRANT PKWY TO IH 820

BRIDGE DRAIN DETAILS

EB US 287 TO SB IH 35W ML

SCALE: NTS — SHEET 2 OF 3

DESIGN	FED. RD. DIV. NO.	FEDERAL AID PROJECT NO.		HIGHWAY NO.
AEB	6	(SEE TITLE SHEET)		IH 35W
GRAPHICS TLS	STATE	DISTRICT	COUNTY	SHEET NO.
CHECK NRR	TEXAS	FTW	TARRANT	1509
CHECK AB	CONTROL	SECTION	JOB	
	0014	16	255, ETC.	

FILENAME: S3BBR*287E-MLS*DR*02.dgn

DRAWING DATE: 7/13/2012

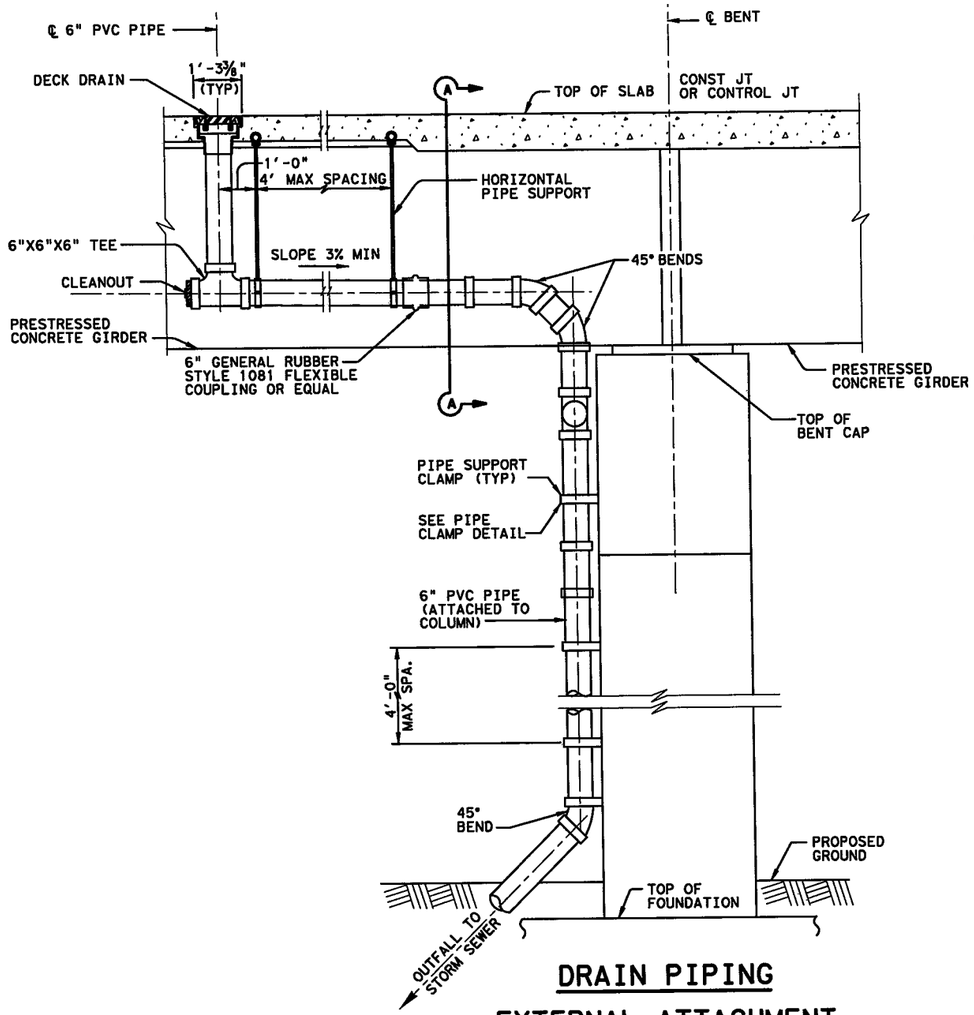

DRAIN PIPING EXTERNAL ATTACHMENT

(BENTS NO. 6 AND NO. 7)

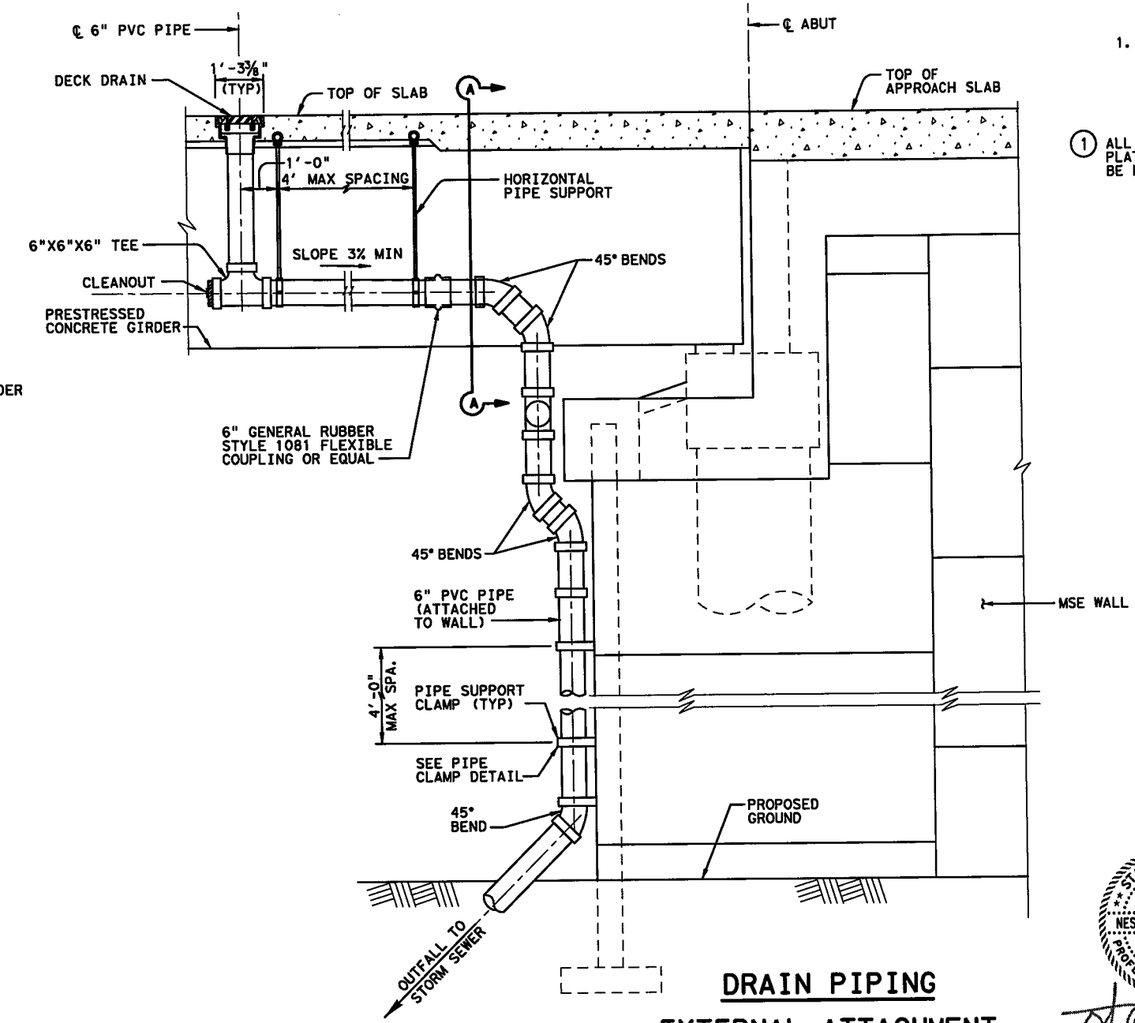

DRAIN PIPING EXTERNAL ATTACHMENT

(ABUTMENT 8)

NOTES:

1. FOR GENERAL NOTES SEE SHEET 1 OF 3.

(1) ALL CLAMPS, BRACKETS, PLATES AND BOLTS SHALL BE HOT-DIPPED GALVANIZED.

STATE OF TEXAS
NESTOR R. RUBIANO
94294
LICENSED PROFESSIONAL ENGINEER

7/06/2012

HL 93 LOADING

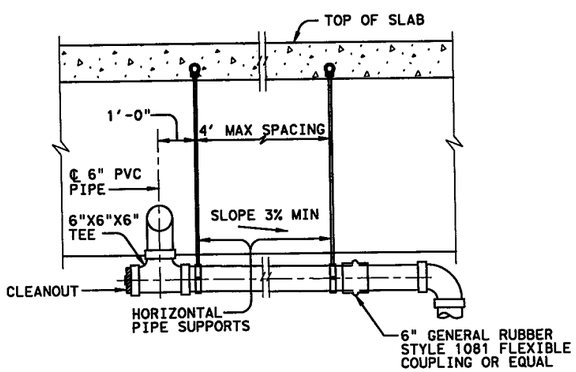

SECTION A-A

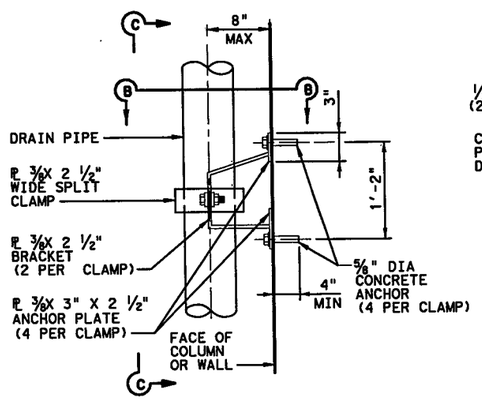

PIPE CLAMP DETAIL (1)

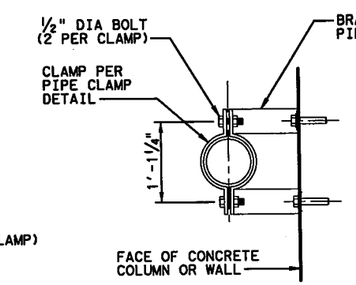

SECTION B-B

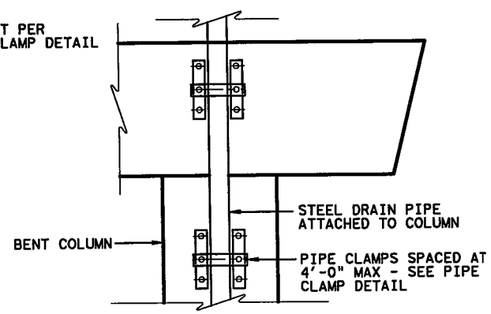

VIEW C-C

(BENT SHOWN, ABUT SIMILAR)

PESC P.E. Structural Consultants, Inc.
www.PEStructural.com
TBPE Firm No. F-1475

Texas Department of Transportation
© 2012

IH 35W FROM NORTH TARRANT PKWY TO IH 820

BRIDGE DRAIN DETAILS

EB US 287 TO SB IH 35W ML

SCALE: NTS — SHEET 3 OF 3

DESIGN	FED. RD. DIV. NO.	FEDERAL AID PROJECT NO.		HIGHWAY NO.
AEB	6	(SEE TITLE SHEET)		IH 35W
GRAPHICS TLS	STATE	DISTRICT	COUNTY	SHEET NO.
CHECK NRR	TEXAS	FTW	TARRANT	
CHECK AB	CONTROL	SECTION	JOB	1510
	0014	16	255, ETC.	

FILENAME: S3BBR*287E-MLS*DR*03.dgn
DRAWING DATE: 7/13/2012

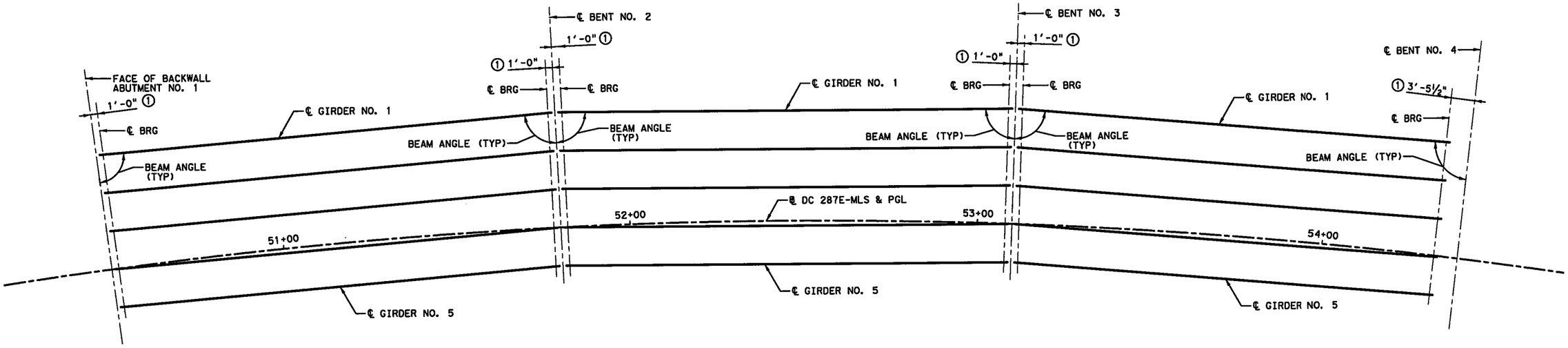

SPAN 1
(TX54 GIRDERS)

SPAN 2
(TX54 GIRDERS)

SPAN 3
(TX54 GIRDERS)

① SEE IGEB STANDARD FOR ORIENTATION OF DIMENSION.

② GIRDER LENGTHS SHOWN ARE BOTTOM GIRDER FLANGE LENGTHS WITH ADJUSTMENTS MADE FOR BEAM SLOPE.

BENT REPORT

ABUT NO. 1 (S 59 13 10.09 W)
DISTANCE BETWEEN STATION LINE AND BEAM 1 16.500 L

			BEAM SPAC. (C.L. BENT)	BEAM ANGLE D M S
SPAN 1	BEAM	1	0.000	87 32 1
	BEAM	2	5.500	87 32 1
	BEAM	3	5.500	87 32 1
	BEAM	4	5.500	87 32 1
	BEAM	5	5.500	87 32 1
	TOTAL		22.000	

BENT NO. 2 (S 64 9 7.98 W)
DISTANCE BETWEEN STATION LINE AND BEAM 1 16.500 L

			BEAM SPAC. (C.L. BENT)	BEAM ANGLE D M S
SPAN 1	BEAM	1	0.000	87 32 1
	BEAM	2	5.500	87 32 1
	BEAM	3	5.500	87 32 1
	BEAM	4	5.500	87 32 1
	BEAM	5	5.500	87 32 1
	TOTAL		22.000	
SPAN 2	BEAM	1	0.000	87 32 1
	BEAM	2	5.500	87 32 1
	BEAM	3	5.500	87 32 1
	BEAM	4	5.500	87 32 1
	BEAM	5	5.500	87 32 1
	TOTAL		22.000	

BENT NO. 3 (S 69 5 5.88 W)
DISTANCE BETWEEN STATION LINE AND BEAM 1 16.500 L

			BEAM SPAC. (C.L. BENT)	BEAM ANGLE D M S
SPAN 2	BEAM	1	0.000	87 32 1
	BEAM	2	5.500	87 32 1
	BEAM	3	5.500	87 32 1
	BEAM	4	5.500	87 32 1
	BEAM	5	5.500	87 32 1
	TOTAL		22.000	
SPAN 3	BEAM	1	0.000	87 32 1
	BEAM	2	5.500	87 32 1
	BEAM	3	5.500	87 32 1
	BEAM	4	5.500	87 32 1
	BEAM	5	5.500	87 32 1
	TOTAL		22.000	

BENT NO. 4 (S 74 1 3.78 W)
DISTANCE BETWEEN STATION LINE AND BEAM 1 16.500 L

			BEAM SPAC. (C.L. BENT)	BEAM ANGLE D M S
SPAN 3	BEAM	1	0.000	87 32 1
	BEAM	2	5.500	87 32 1
	BEAM	3	5.500	87 32 1
	BEAM	4	5.500	87 32 1
	BEAM	5	5.500	87 32 1
	TOTAL		22.000	

BEAM REPORT

BEAM REPORT, SPAN 1

	HORIZONTAL DISTANCE C-C BENT	C-C BRG.	TRUE DISTANCE BOT. BM. FLG. ②	BEAM SLOPE
BEAM 1	131.380	129.379	130.93	0.0272
BEAM 2	130.907	128.906	130.45	0.0273
BEAM 3	130.433	128.432	129.98	0.0274
BEAM 4	129.960	127.959	129.51	0.0275
BEAM 5	129.486	127.486	129.04	0.0276

BEAM REPORT, SPAN 2

	HORIZONTAL DISTANCE C-C BENT	C-C BRG.	TRUE DISTANCE ② BOT. BM. FLG.	BEAM SLOPE
BEAM 1	131.380	129.380	130.90	0.0194
BEAM 2	130.907	128.907	130.43	0.0195
BEAM 3	130.433	128.433	129.96	0.0196
BEAM 4	129.960	127.960	129.48	0.0196
BEAM 5	129.486	127.486	129.01	0.0197

BEAM REPORT, SPAN 3

	HORIZONTAL DISTANCE C-C BENT	C-C BRG.	TRUE DISTANCE ② BOT. BM. FLG.	BEAM SLOPE
BEAM 1	131.380	126.877	128.38	0.0050
BEAM 2	130.907	126.403	127.91	0.0051
BEAM 3	130.433	125.930	127.43	0.0051
BEAM 4	129.960	125.457	126.96	0.0051
BEAM 5	129.486	124.983	126.49	0.0051

STATE OF TEXAS
NESTOR R. RUBIANO
94294
LICENSED
PROFESSIONAL ENGINEER
7/06/2012

HL 93 LOADING

P.E. Structural Consultants, Inc.
www.PEStructural.com
TBPE Firm No. F-1475

Texas Department of Transportation
© 2012

IH 35W FROM NORTH TARRANT PKWY TO IH 820

GIRDER LAYOUT (SPANS 1-3)

EB US 287 TO SB IH 35W ML

SCALE: NTS — SHEET 1 OF 1

DESIGN	FED.RD. DIV.NO.	FEDERAL AID PROJECT NO.		HIGHWAY NO.
AEB	6	(SEE TITLE SHEET)		IH 35W
GRAPHICS TLS	STATE	DISTRICT	COUNTY	SHEET NO.
CHECK NRR	TEXAS	FTW	TARRANT	1511
CHECK AB	CONTROL	SECTION	JOB	
	0014	16	255, ETC.	

DRAWING DATE: 7/13/2012 FILENAME: S3BBR*287E-MLS*GF*01.DGN

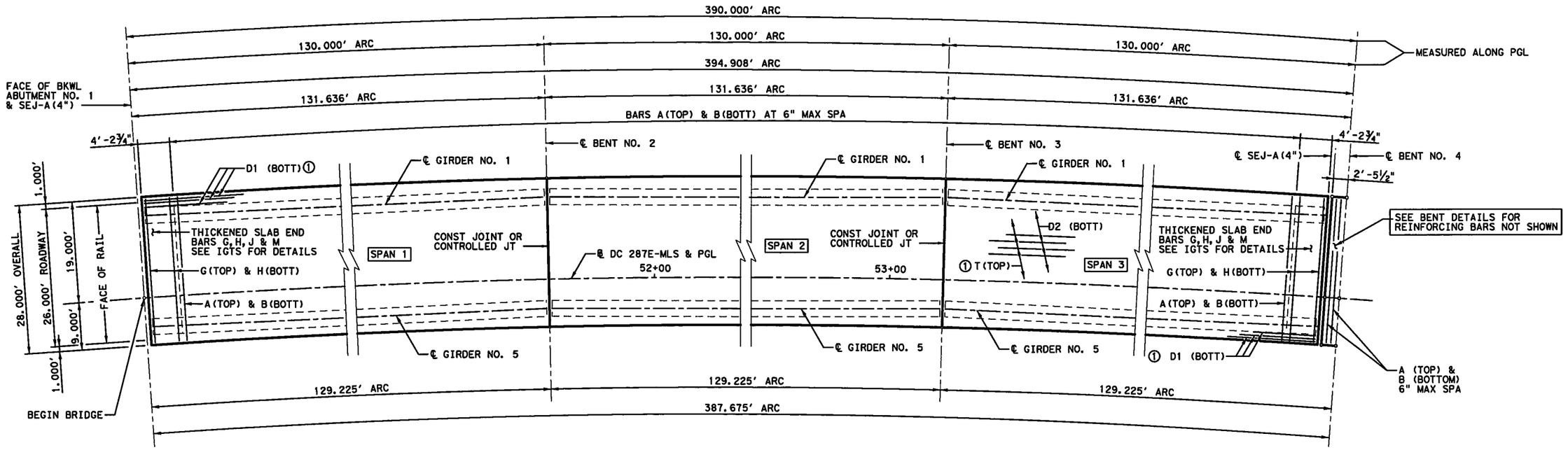

PLAN

① 2" END COVER ON BARS D1 AND T.

STATE OF TEXAS
NESTOR R. RUBIANO
94294
LICENSED
PROFESSIONAL ENGINEER

8/29/2012

HL 93 LOADING

PESC P.E. Structural Consultants, Inc.
www.PEStructural.com
TBPE Firm No. F-1475

Texas Department of Transportation

© 2012

IH 35W FROM NORTH TARRANT PKWY TO IH 820

390.00' PRESTRESSED CONCRETE I-GIRDER UNIT

EB US 287 TO SB IH 35W ML

SCALE: NTS

SHEET 1 OF 2

DESIGN	FED. RD. DIV. NO.	FEDERAL AID PROJECT NO.		HIGHWAY NO.
AEB	6	(SEE TITLE SHEET)		IH 35W
GRAPHICS	STATE	DISTRICT	COUNTY	SHEET NO.
TLS	TEXAS	FTW	TARRANT	1512
CHECK	CONTROL	SECTION	JOB	
NRR	0014	16	255, ETC.	
CHECK				
AB				

DRAWING DATE: 7/13/2012 FILENAME: S3BBR#287E-MLS#PB#01.DGN

SPAN NO.	GIRDER NO.	"A" FT	"B" FT
1 & 2	1	0.186	0.265
	2	0.160	0.228
	3	0.158	0.224
	4	0.155	0.221
	5	0.144	0.204
3	1	0.173	0.245
	2	0.148	0.211
	3	0.146	0.208
	4	0.144	0.205
	5	0.133	0.189

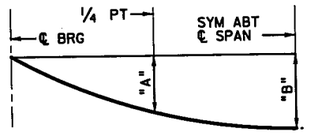

DEAD LOAD DEFLECTION DIAGRAM

CALCULATED DEFLECTIONS SHOWN ARE DUE TO THE CONCRETE SLAB ON INTERIOR GIRDERS ONLY (EC = 5000 KSI). ADJUST VALUES AS REQUIRED FOR EXTERIOR GIRDERS AND IF OPTIONAL SLAB FORMING IS USED. THESE VALUES MAY REQUIRE FIELD VERIFICATION.

TABLE OF SECTION DEPTHS

SPAN NO.	GIRDER NO.	"X" AT ℄ BRG	"Y" AT ℄ BRG	②"Z" AT ℄ SPAN
1	1	1'-2 ½"	5'-8 ½"	10 ⅛"
	2	1'-2 ½"	5'-8 ½"	10 ⅜"
	3 & 4	1'-2 ½"	5'-8 ½"	10 ¼"
	5	1'-2 ½"	5'-8 ½"	10"
2	1 & 5	11 ¾"	5'-5 ¾"	10 ⅛"
	2	11 ¾"	5'-5 ¾"	10 ⅜"
	3 & 4	11 ¾"	5'-5 ¾"	10 ¼"
3	1 & 5	1'-0"	5'-6"	10 ⅛"
	2	1'-0"	5'-6"	10 ⅜"
	3 & 4	1'-0"	5'-6"	10 ¼"

②THEORETICAL DIMENSION

BAR TABLE

BAR	SIZE
A	#5
B	#5
D	#5
G	#5
H	#5
J	#5
M	#5
T	#4

TABLE OF ESTIMATED QUANTITIES

SPAN	REINF CONC SLAB	PRESTR CONC I-GIRDERS (TX54) ④	CL S CONC (HPC)	REINFORCING STEEL ③
NO.	SF	LF	CY	LB
1	3,652	649.92	114.7	23,738
2	3,652	649.78	109.2	23,738
3	3,652	637.37	109.4	23,738
TOTAL	10,956	1,937.07	333.3	71,214

③REINFORCING STEEL WEIGHT IS CALCULATED USING AN APPROXIMATE FACTOR OF 6.5 LBS PER SQ FT.

④LENGTHS SHOWN ARE BOTTOM OF GIRDER FLANGE LENGTHS WITH ADJUSTMENTS MADE FOR BEAM SLOPE. SEE GIRDER LAYOUT FOR GIRDER LENGTHS.

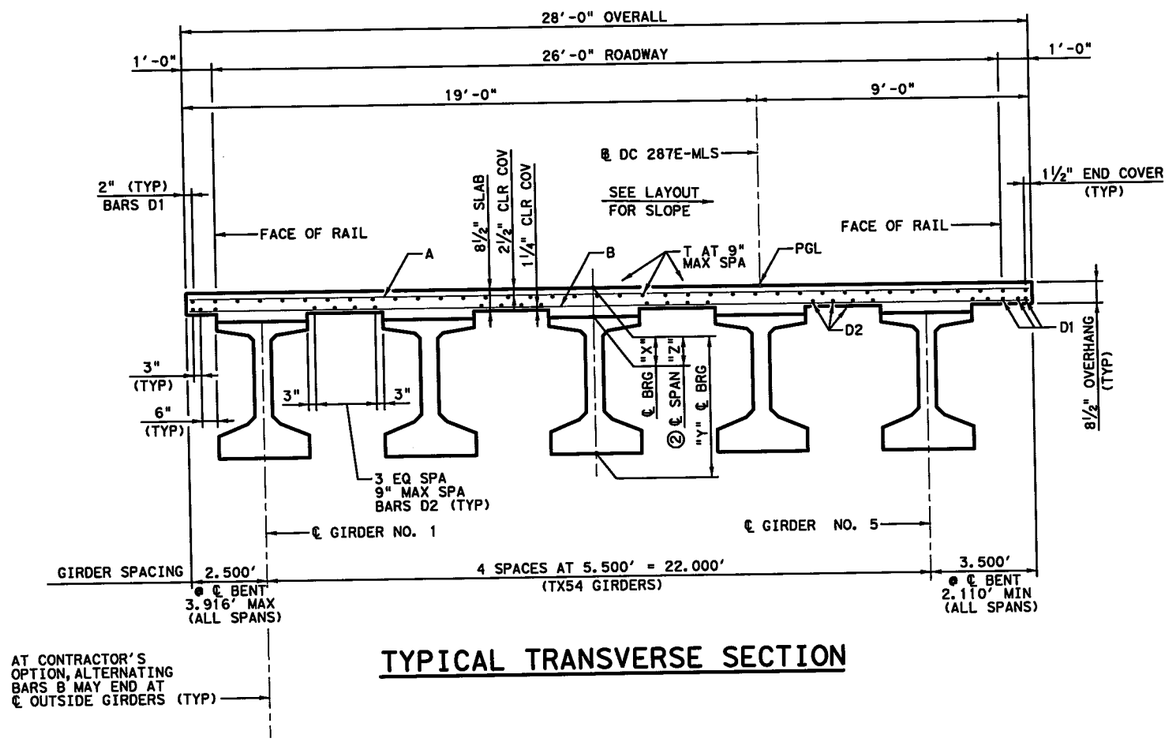

TYPICAL TRANSVERSE SECTION

GENERAL NOTES:

1. DESIGNED ACCORDING TO AASHTO LRFD BRIDGE DESIGN SPECIFICATIONS, 5TH EDITION (2010).
2. CLASS "S"(HPC) CONCRETE STRENGTH F'C = 4,000 PSI.
3. ALL REINFORCING SHALL BE GRADE 60 AND EPOXY COATED.
4. SEE PCP OR PMDF STANDARDS FOR DETAILS AND QUANTITY ADJUSTMENTS IF EITHER OF THESE OPTIONS ARE USED.
5. SEE IGTS STANDARD FOR THICKENED SLAB END DETAILS.
6. SEE IGMS STANDARD FOR MISCELLANEOUS SLAB DETAILS.
7. SEE RAIL STANDARD FOR RAIL ANCHORAGE IN SLAB.
8. BAR LAPS, WHERE REQUIRED, TO BE AS FOLLOWS:
   #4 = 2'-1"
   #5 = 2'-7"

STATE OF TEXAS
NESTOR R. RUBIANO
94294
LICENSED PROFESSIONAL ENGINEER

7/06/2012

HL 93 LOADING

P.E. Structural Consultants, Inc.
www.PEStructural.com
TBPE Firm No. F-1475

Texas Department of Transportation

© 2012

IH 35W FROM NORTH TARRANT PKWY TO IH 820

390.00' PRESTRESSED CONCRETE I-GIRDER UNIT

EB US 287 TO SB IH 35W ML

SCALE: NTS

SHEET 2 OF 2

DESIGN	FED.RD. DIV.NO.	FEDERAL AID PROJECT NO.		HIGHWAY NO.
AEB	6	(SEE TITLE SHEET)		IH 35W
GRAPHICS TLS	STATE	DISTRICT	COUNTY	SHEET NO.
CHECK NRR	TEXAS	FTW	TARRANT	1513
CHECK AB	CONTROL 0014	SECTION 16	JOB 255, ETC.	

FILENAME: S3BBR*287E-MLS*PB*02.DGN

DRAWING DATE: 7/13/2012

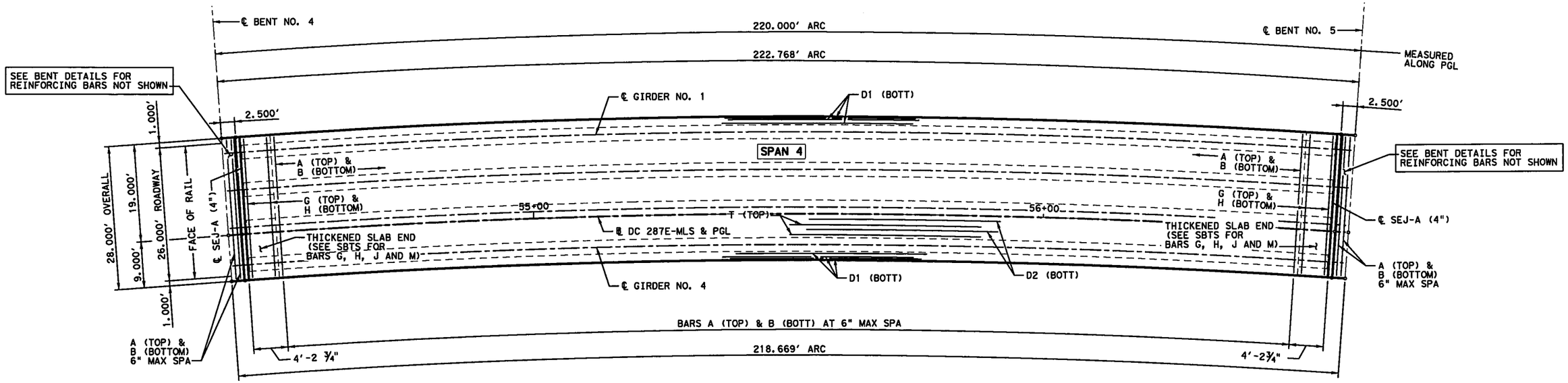

PLAN

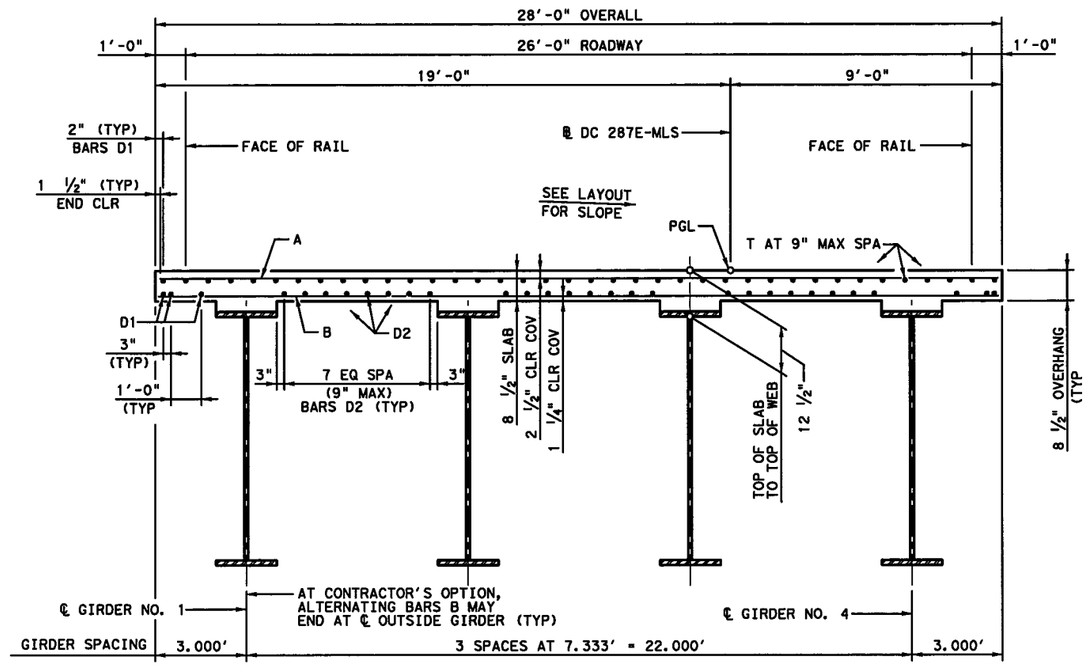

TYPICAL RADIAL SECTION

GENERAL NOTES:

1. DESIGNED ACCORDING TO AASHTO LRFD BRIDGE DESIGN SPECIFICATIONS, 5TH EDITION (2010).
2. CLASS "S"(HPC) CONCRETE STRENGTH F'C = 4,000 PSI.
3. ALL REINFORCING SHALL BE GRADE 60 AND EPOXY COATED.
4. SEE SBTS STANDARD FOR THICKENED SLAB END DETAILS AND QUANTITY ADJUSTMENTS.
5. PRESTRESSED CONCRETE PANELS (PCP) SHALL NOT BE PERMITTED.
6. SEE PMDF STANDARD FOR OPTIONAL STAY IN PLACE FORMING DETAILS.
7. SEE SBMS STANDARD FOR MISCELLANEOUS SLAB DETAILS.
8. SEE SGEB STANDARD FOR BEARING DETAILS.
9. SEE RAIL STANDARD FOR RAIL ANCHORAGE IN SLAB.
10. BAR LAPS, WHERE REQUIRED, TO BE AS FOLLOWS:
    #4 = 2'-1"
    #5 = 2'-7"

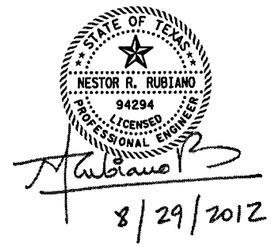

HL 93 LOADING

PESC P.E. Structural Consultants, Inc.
www.PEStructural.com
TBPE Firm No. F-1475

Texas Department of Transportation
© 2012

IH 35W FROM NORTH TARRANT PKWY TO IH 820

220.00' PLATE GIRDER UNIT

EB US 287 TO SB IH 35W ML

SCALE: NTS — SHEET 1 OF 7

DESIGN	FED.RD. DIV.NO.	FEDERAL AID PROJECT NO.		HIGHWAY NO.
AEB	6	(SEE TITLE SHEET)		IH 35W
GRAPHICS TLS	STATE	DISTRICT	COUNTY	SHEET NO.
CHECK NRR	TEXAS	FTW	TARRANT	1514
CHECK AB	CONTROL	SECTION	JOB	
	0014	16	255, ETC.	

DRAWING DATE: 7/13/2012 FILENAME: S3BBR#287E-MLS#SG#01.DGN

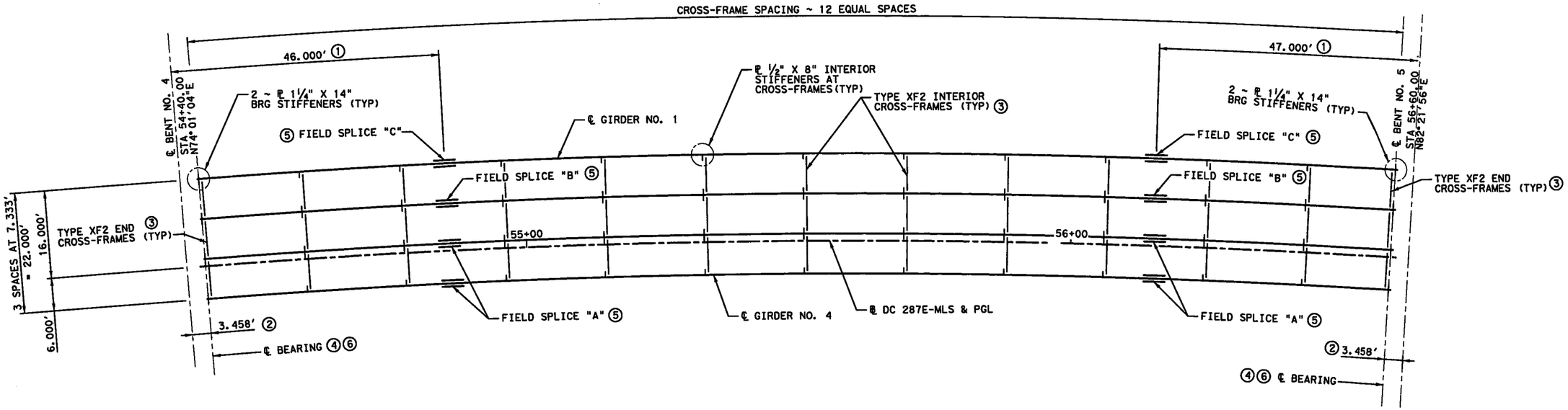

FRAMING PLAN SPAN 4

TABLE OF GIRDER RADII	
GIRDER #1	1526.000'
GIRDER #2	1518.667'
GIRDER #3	1511.333'
℄ DC 287E-MLS	1510.000'
GIRDER #4	1504.000'

TABLE OF CROSS-FRAME MEMBER SIZES ③		
MEMBER	TYPE "XF2" END CROSS-FRAMES	TYPE "XF2" INTERIOR CROSS-FRAMES
TOP CHORD	5" x 5" x ½"	5" x 5" x ½"
BOTTOM CHORD	5" x 5" x ½"	5" x 5" x ½"
DIAGONALS	5" x 5" x ½"	5" x 5" x ½"

① MEASURED ALONG ℄ DC 287E-MLS.
② MEASURED PERPENDICULAR TO ℄ BENT.
③ SEE SGMD STANDARDS FOR ADDITIONAL DETAILS.
④ SEE SGEB STANDARD FOR BEARING DETAILS.
⑤ SEE BOLTED FIELD SPLICE DETAILS ON SHEETS 5 AND 6 OF 7.
⑥ SEE GIRDER ELEVATIONS ON SHEETS 3 AND 4 OF 7 FOR BEARING TYPES.

STATE OF TEXAS
NESTOR R. RUBIANO
94294
LICENSED
PROFESSIONAL ENGINEER
7/06/2012

HL 93 LOADING

PESC P.E. Structural Consultants, Inc.
www.PEStructural.com
TBPE Firm No. F-1475

Texas Department of Transportation
© 2012

IH 35W FROM NORTH TARRANT PKWY TO IH 820

220.00'
PLATE GIRDER UNIT

EB US 287 TO SB IH 35W ML

SCALE: NTS — SHEET 2 OF 7

DESIGN	FED. RD. DIV. NO.	FEDERAL AID PROJECT NO.		HIGHWAY NO.
AEB	6	(SEE TITLE SHEET)		IH 35W
GRAPHICS	STATE	DISTRICT	COUNTY	SHEET NO.
TLS	TEXAS	FTW	TARRANT	1515
CHECK NRR	CONTROL	SECTION	JOB	
CHECK AB	0014	16	255, ETC.	

FILENAME: S3BBR*287E-MLS*SG*02.dgn
DRAWING DATE: 7/13/2012

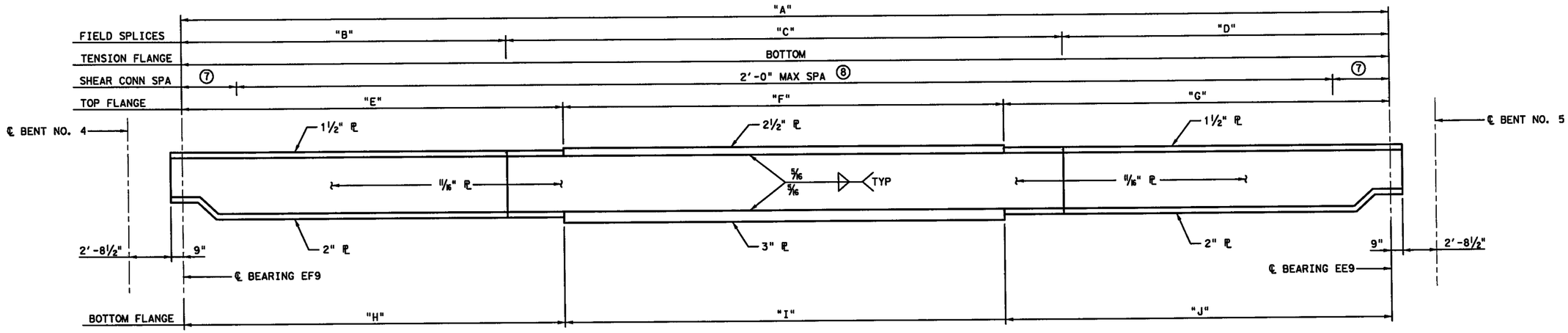

SPAN 4

⑦ 4 SPA = 2'-0"

⑧ NOTE OMISSION OF STUDS AT OPTIONAL BOLTED SPLICES.

ELEVATION ~ GIRDER NO. 1

ALL WEB PLATES ARE 96" DEEP EXCEPT AT DAPPED ENDS. ALL FLANGE PLATES ARE 30" WIDE.

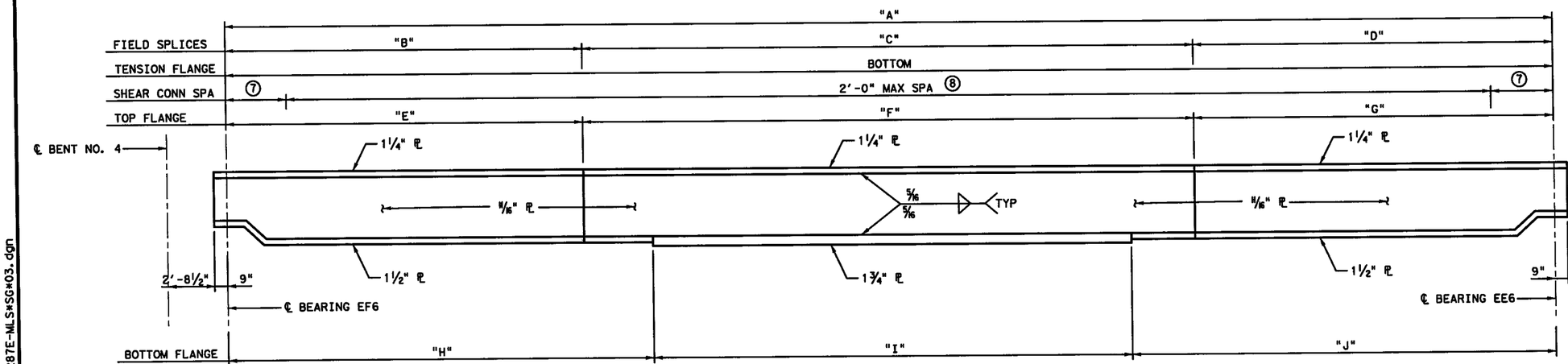

SPAN 4

ELEVATION ~ GIRDER NO. 2

TABLE OF GIRDER DIMENSIONS											
GIRDER NO.	"A"	"B"	"C"	"D"	"E"	"F"	"G"	"H"	"I"	"J"	RADIUS
1	215.415'	43.029'	128.346'	44.040'	53.029'	108.346'	54.040'	48.029'	118.346'	49.040'	1526.000'
2	214.347'	42.806'	127.729'	43.812'	42.806'	127.729'	43.812'	62.806'	87.729'	63.812'	1518.667'
3	213.278'	42.583'	127.112'	43.583'	42.583'	127.112'	43.583'	42.583'	127.112'	43.583'	1511.333'
4	212.210'	42.359'	126.495'	43.356'	42.359'	126.495'	43.356'	42.359'	126.495'	43.356'	1504.000'

HL 93 LOADING

PESC P.E. Structural Consultants, Inc.
www.PEStructural.com
TBPE Firm No. F-1475

Texas Department of Transportation

© 2012

IH 35W FROM NORTH TARRANT PKWY TO IH 820

220.00'
PLATE GIRDER UNIT

EB US 287 TO SB IH 35W ML

SCALE: NTS

SHEET 3 OF 7

DESIGN	FED.RD. DIV.NO.	FEDERAL AID PROJECT NO.		HIGHWAY NO.
AEB	6	(SEE TITLE SHEET)		IH 35W
GRAPHICS TLS	STATE	DISTRICT	COUNTY	SHEET NO.
CHECK NRR	TEXAS	FTW	TARRANT	1516
CHECK AB	CONTROL	SECTION	JOB	
	0014	16	255, ETC.	

STATE OF TEXAS
NESTOR R. RUBIANO
94294
LICENSED PROFESSIONAL ENGINEER

7/06/2012

FILENAME: S3BBR*287E-ML*SG*03.dgn

DRAWING DATE: 7/13/2012

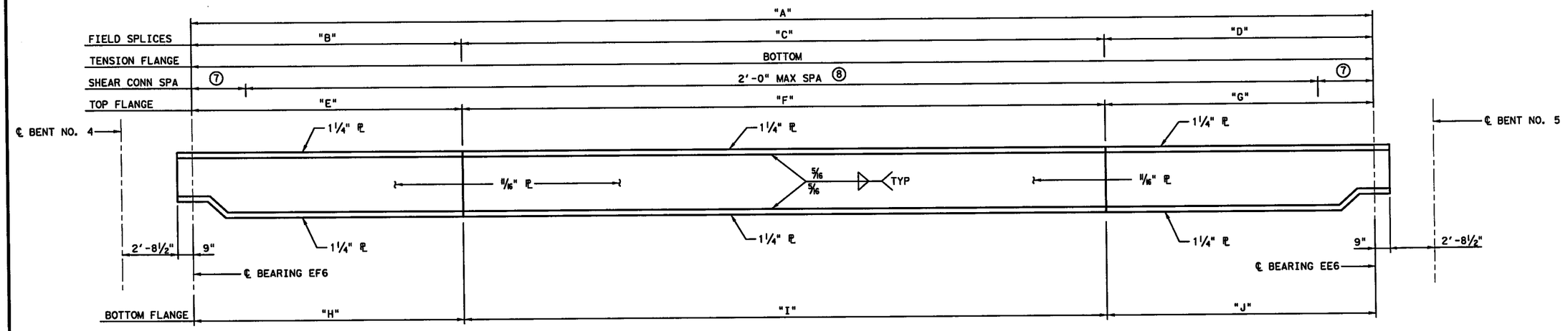

SPAN 4

ELEVATION ~ GIRDER NO. 4

⑦ 4 SPA = 2'-0"

⑧ NOTE OMISSION OF STUDS AT OPTIONAL BOLTED SPLICES.

ALL WEB PLATES ARE 96" DEEP EXCEPT AT DAPPED ENDS. ALL FLANGE PLATES ARE 30" WIDE.

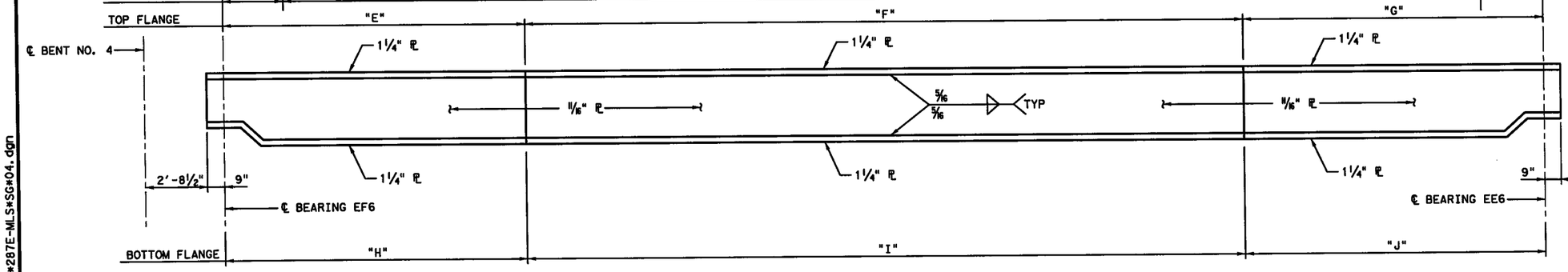

SPAN 4

ELEVATION ~ GIRDER NO. 3

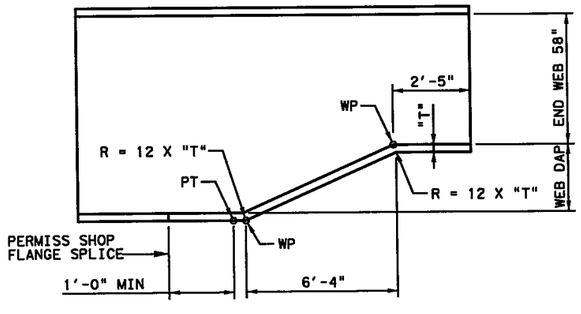

DAPPED END DETAIL

HL 93 LOADING

STATE OF TEXAS
NESTOR R. RUBIANO
94294
LICENSED PROFESSIONAL ENGINEER
7/06/2012

PESC P.E. Structural Consultants, Inc.
www.PEStructural.com
TBPE Firm No. F-1475

Texas Department of Transportation
© 2012

IH 35W FROM NORTH TARRANT PKWY TO IH 820

220.00'
PLATE GIRDER UNIT

EB US 287 TO SB IH 35W ML

SCALE: NTS — SHEET 4 OF 7

DESIGN	FED.RD. DIV.NO.	FEDERAL AID PROJECT NO.		HIGHWAY NO.
AEB	6	(SEE TITLE SHEET)		IH 35W
GRAPHICS TLS	STATE	DISTRICT	COUNTY	SHEET NO.
CHECK NRR	TEXAS	FTW	TARRANT	1517
CHECK AB	CONTROL	SECTION	JOB	
	0014	16	255, ETC.	

FILENAME: S3BBR*287E-ML$*SG*04.dgn

DRAWING DATE: 7/13/2012

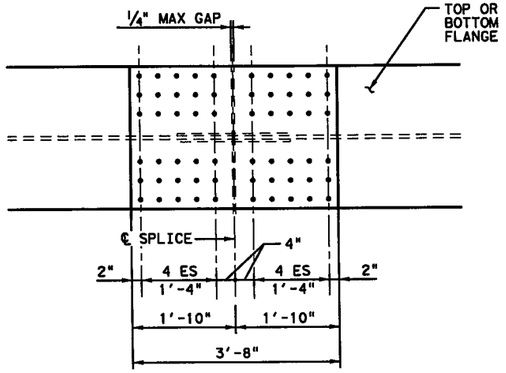

PLAN

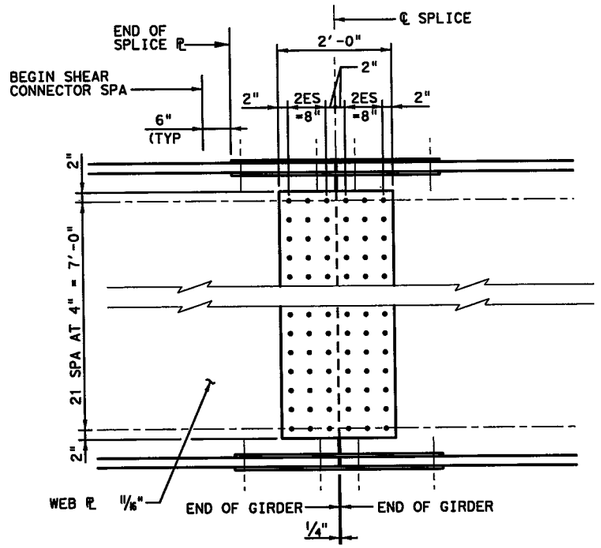

ELEVATION

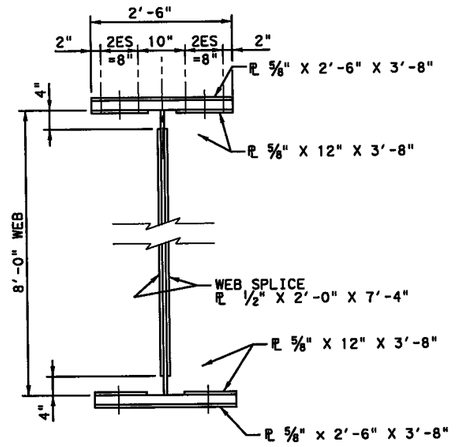

SECTION

OPTIONAL BOLTED FIELD SPLICE NOTES:

1. ALL BOLTS SHALL BE 1" DIA A325 WITH ONE HARDENED WASHER EACH AND SHALL BE TIGHTENED IN ACCORDANCE WITH ITEM 447. ALL HOLES SHALL BE 1 1/16" DIA.
2. ALL SPLICE PLATES SHALL CONFORM TO A709 GRADE 50.
3. ALL SPLICE PLATES ARE CLASSIFIED AS TENSION COMPONENTS AND SHALL CONFORM TO ITEM 442.2.A.1.
4. BOLTS SHALL BE INSTALLED WITH HEADS ON FASCIA SIDE OF WEB FOR GIRDERS NO. 1 AND NO. 4. BOTTOM FLANGE SPLICE BOLTS SHALL BE INSTALLED WITH HEADS FACING DOWN.
5. STRUCTURAL STEEL PAY WEIGHT SHALL BE BASED ON WELDED FIELD SPLICES REGARDLESS OF SPLICE TYPE CHOSEN.
6. CLASS A SURFACE CONDITION WAS ASSUMED IN THE DESIGN OF FIELD SPLICES (SLIP COEFFICIENT 0.33).
7. PREPARE FAYING SURFACES AS PER ITEMS 441, 446 AND 447. ENSURE THE REQUIRED FINISH EXISTS AT THE TIME OF BOLTING. DO NOT WIRE-BRUSH UNPAINTED FAYING SURFACES.

OPTIONAL BOLTED FIELD SPLICE "A"

BOLTED FIELD SPLICE SHOWN SHALL BE USED.
EACH SPLICE WEIGHT = 2,071 LBS.

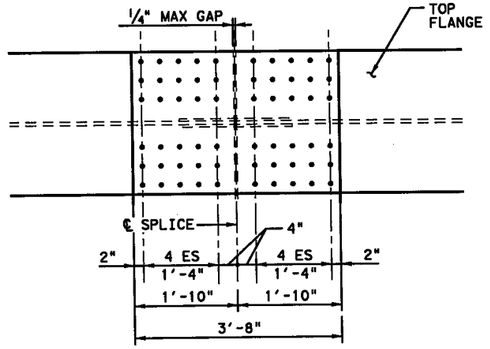

PLAN ~ TOP FLANGE

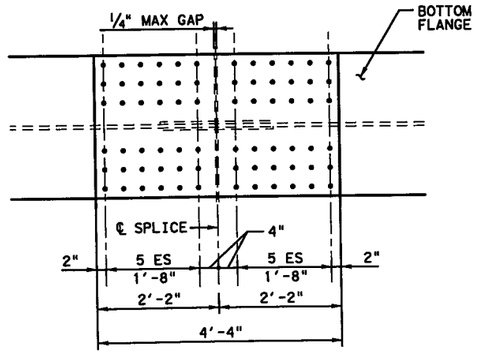

PLAN ~ BOTTOM FLANGE

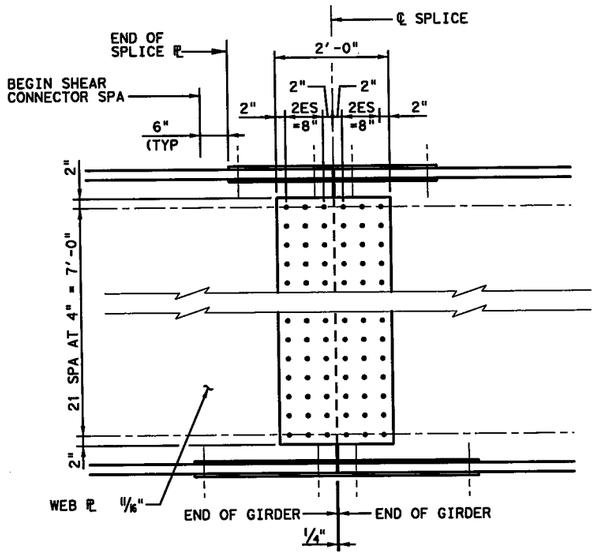

ELEVATION

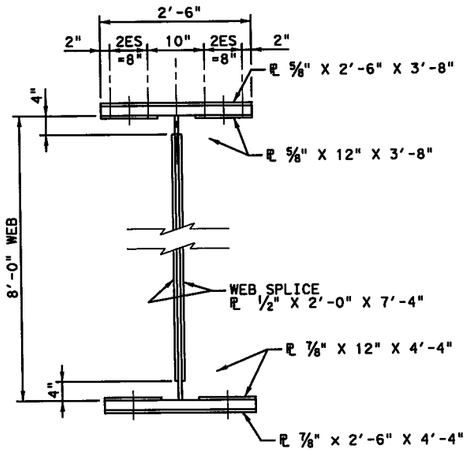

SECTION

OPTIONAL BOLTED FIELD SPLICE "B"

BOLTED FIELD SPLICE SHOWN SHALL BE USED.
EACH SPLICE WEIGHT = 2,377 LBS.

STATE OF TEXAS
NESTOR R. RUBIANO
94294
LICENSED
PROFESSIONAL ENGINEER

7/06/2012

HL 93 LOADING

PESC
P.E. Structural Consultants, Inc.
www.PEStructural.com
TBPE Firm No. F-1475

Texas Department of Transportation
© 2012

IH 35W FROM NORTH TARRANT PKWY TO IH 820

220.00'
PLATE GIRDER UNIT

EB US 287 TO SB IH 35W ML

SCALE: NTS — SHEET 5 OF 7

DESIGN	FED.RD. DIV.NO.	FEDERAL AID PROJECT NO.		HIGHWAY NO.
AEB	6	(SEE TITLE SHEET)		IH 35W
GRAPHICS TLS	STATE	DISTRICT	COUNTY	SHEET NO.
CHECK NRR	TEXAS	FTW	TARRANT	1518
CHECK AB	CONTROL	SECTION	JOB	
	0014	16	255, ETC.	

FILENAME: S3BBR#287E-MLS#SG#05.dgn
DRAWING DATE: 7/13/2012

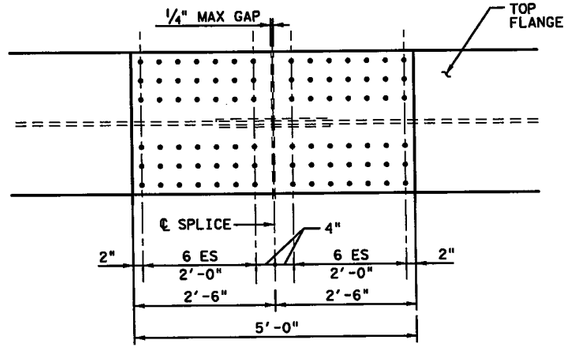

PLAN ~ TOP FLANGE

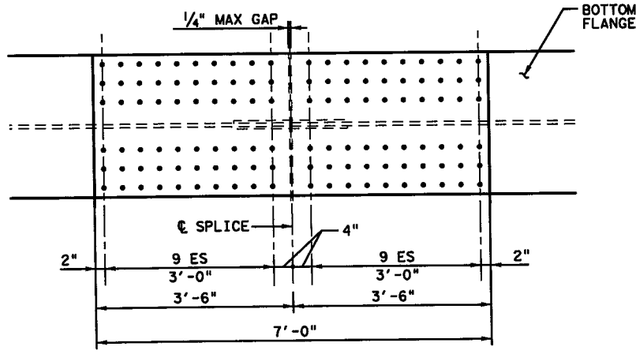

PLAN ~ BOTTOM FLANGE

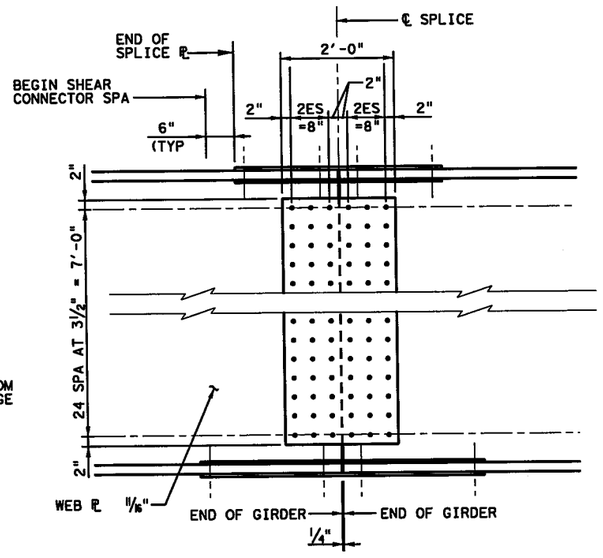

ELEVATION

OPTIONAL BOLTED FIELD SPLICE "C"

BOLTED FIELD SPLICE SHOWN SHALL BE USED.
EACH SPLICE WEIGHT = 3,896 LBS.

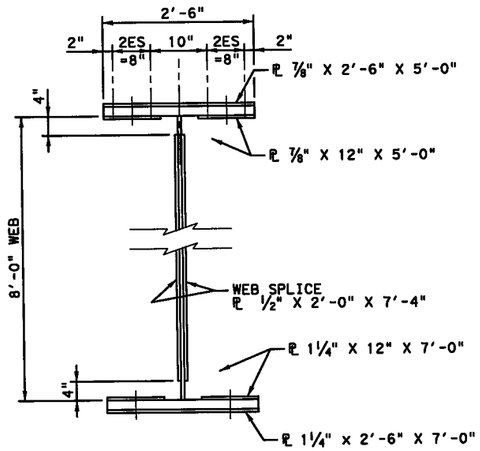

SECTION

7/06/2012

HL 93 LOADING

P.E. Structural Consultants, Inc.
www.PEStructural.com
TBPE Firm No. F-1475

Texas Department of Transportation

© 2012

IH 35W FROM NORTH TARRANT PKWY TO IH 820

220.00'
PLATE GIRDER UNIT

EB US 287 TO SB IH 35W ML

SCALE: NTS

SHEET 6 OF 7

DESIGN	FED. RD. DIV. NO.	FEDERAL AID PROJECT NO.		HIGHWAY NO.
AEB	6	(SEE TITLE SHEET)		IH 35W
GRAPHICS TLS	STATE	DISTRICT	COUNTY	SHEET NO.
CHECK NRR	TEXAS	FTW	TARRANT	1519
CHECK AB	CONTROL	SECTION	JOB	
	0014	16	255, ETC.	

FILENAME: S38BR#287E-MLS#SG#06.dgn

DRAWING DATE: 7/13/2012

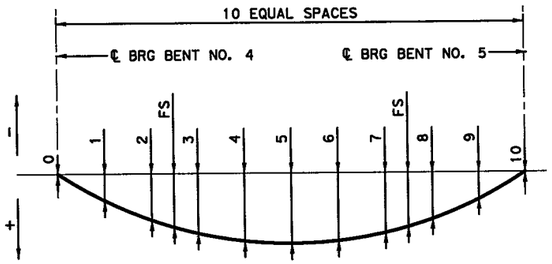

DEAD LOAD DEFLECTION DIAGRAM

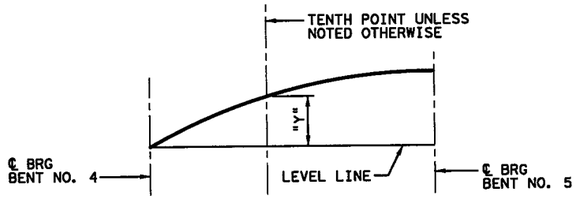

WEB CAMBER DIAGRAM

WEBS MAY BE CUT ON STRAIGHT LINES BETWEEN ORDINATES SHOWN OR TO A SMOOTH CURVE AT THE FABRICATOR'S OPTION. ORDINATES SHOWN INCLUDE TOTAL DEAD LOAD DEFLECTION AND VERTICAL CURVE CORRECTIONS.

BAR TABLE	
BAR	SIZE
A	#5
B	#5
D	#5
G	#5
H	#5
J	#5
M	#5
T	#4

TABLE OF ESTIMATED QUANTITIES				
SPAN	REINF CONC SLAB	REINFORCING STEEL ⑨	CL S CONC (HPC)	STRUCTURAL STEEL (PL GIRDER)
NO.	SF	LB	CY	LB
4	6,180	43,260	179.5	506,900

⑨ REINFORCING STEEL WEIGHT IS CALCULATED USING AN APPROXIMATE FACTOR OF 7.0 LBS PER SQ FT.

FS = FIELD SPLICE

TABLE OF DEAD LOAD DEFLECTIONS

DUE TO CAST IN PLACE CONCRETE (FT)

	LOCATION	GIRDER NO. 1	2	3	4
SPAN 4	0	0.000	0.000	0.000	0.000
	1	0.206	0.180	0.156	0.132
	FS1	0.376	0.330	0.287	0.245
	2	0.377	0.331	0.288	0.246
	3	0.504	0.447	0.391	0.335
	4	0.582	0.519	0.456	0.392
	5	0.610	0.544	0.478	0.412
	6	0.583	0.519	0.456	0.392
	7	0.504	0.447	0.391	0.335
	FS2	0.386	0.340	0.296	0.252
	8	0.377	0.332	0.289	0.246
	9	0.207	0.180	0.156	0.132
	10	0.000	0.000	0.000	0.000

TABLE OF DEAD LOAD DEFLECTIONS

TOTAL INCLUDING STEEL (FT)

	LOCATION	GIRDER NO. 1	2	3	4
SPAN 4	0	0.000	0.000	0.000	0.000
	1	0.356	0.300	0.247	0.196
	FS1	0.648	0.549	0.455	0.364
	2	0.650	0.551	0.457	0.365
	3	0.868	0.743	0.620	0.498
	4	1.004	0.863	0.723	0.582
	5	1.051	0.904	0.758	0.612
	6	1.004	0.863	0.723	0.583
	7	0.868	0.743	0.621	0.498
	FS2	0.666	0.565	0.469	0.375
	8	0.650	0.551	0.457	0.365
	9	0.356	0.300	0.247	0.196
	10	0.000	0.000	0.000	0.000

TABLE OF CAMBER ORDINATES

"Y" VALUES IN FEET

	LOCATION	GIRDER NO. 1	2	3	4
SPAN 4	0	3.13	3.13	3.13	3.13
	1	3.40	3.35	3.29	3.24
	FS1	3.56	3.46	3.37	3.28
	2	3.56	3.46	3.37	3.28
	3	3.60	3.47	3.35	3.22
	4	3.49	3.35	3.21	3.07
	5	3.25	3.11	2.96	2.82
	6	2.87	2.73	2.59	2.45
	7	2.34	2.22	2.10	1.97
	FS2	1.72	1.62	1.52	1.43
	8	1.68	1.59	1.49	1.40
	9	0.90	0.84	0.79	0.74
	10	0.00	0.00	0.00	0.00

GIRDER SLOPE TABLE (FT/FT)

LOCATION	GIRDER NO. 1	2	3	4
℄ BRG BENT NO. 4	-0.003	-0.003	-0.003	-0.003
℄ BRG BENT NO. 5	-0.027	-0.027	-0.027	-0.027

PLATE GIRDER FABRICATION NOTES:

1. ALL STRUCTURAL STEEL INCLUDING STIFFENERS AND DIAPHRAGMS SHALL CONFORM TO ASTM A709 GR. 50 AND SHALL BE PAID FOR AT THE UNIT PRICE BID FOR STRUCTURAL STEEL (PLATE GIRDER). ALL STRUCTURAL STEEL SHALL BE PAINTED. PAINT SYSTEM FOR STEEL GIRDERS SHALL BE PROTECTION SYSTEM II. THIS SYSTEM SHALL CONFORM TO TXDOT STANDARD SPECIFICATION ITEM 446.
2. GIRDER TENSION FLANGES AND WEBS ARE CLASSIFIED AS TENSION COMPONENTS AND SHALL CONFROM TO ITEM 442.2.A.1.
3. ALL DIMENSIONS SHOWN IN GIRDER ELEVATIONS ARE HORIZONTAL ARC DIMENSIONS.
4. EXCEPT AT CHANGES IN SECTION, SHOP OR FIELD FLANGE AND WEB SPLICES IN PLATE GIRDERS MAY BE LOCATED AS DESIRABLE TO OPTIMIZE PLATE LENGTHS AND ERECTION PROCEDURES, EXCEPT THAT SPLICES WILL NOT BE ALLOWED WHERE A 40FT OR LESS UNSPLICED LENGTH WOULD SUFFICE; NEITHER WILL TENSION FLANGE SPLICES BE ALLOWED WITHIN 0.05S EITHER SIDE OF INTERIOR BEARINGS, WITHIN 0.10S EITHER SIDE OF THE CENTERLINES OF INTERIOR SPANS, NOR WITHIN THE RANGE BETWEEN 0.30S AND 0.50S FROM THE END BEARINGS (S = LENGTH C.C. BEARING OF SPAN IN WHICH THE SPLICE IS MADE).
5. FLANGE AND WEB SPLICES SHALL BE MADE BY FULL PENETRATION GROOVE WELDS IN ACCORDANCE WITH ITEM 441 "STEEL STRUCTURES".

STATE OF TEXAS
NESTOR R. RUBIANO
94294
LICENSED PROFESSIONAL ENGINEER

7/06/2012

HL 93 LOADING

PESC P.E. Structural Consultants, Inc.
www.PEStructural.com
TBPE Firm No. F-1475

Texas Department of Transportation
© 2012

IH 35W FROM NORTH TARRANT PKWY TO IH 820

220.00'
PLATE GIRDER UNIT

EB US 287 TO SB IH 35W ML

SCALE: NTS — SHEET 7 OF 7

DESIGN	FED.RD. DIV.NO.	FEDERAL AID PROJECT NO.		HIGHWAY NO.
AEB	6	(SEE TITLE SHEET)		IH 35W
GRAPHICS TLS	STATE	DISTRICT	COUNTY	SHEET NO.
CHECK NRR	TEXAS	FTW	TARRANT	1520
CHECK AB	CONTROL	SECTION	JOB	
	0014	16	255, ETC.	

DRAWING DATE: 7/13/2012 FILENAME: S3BBR#287E-MLS#SG#07.dgn

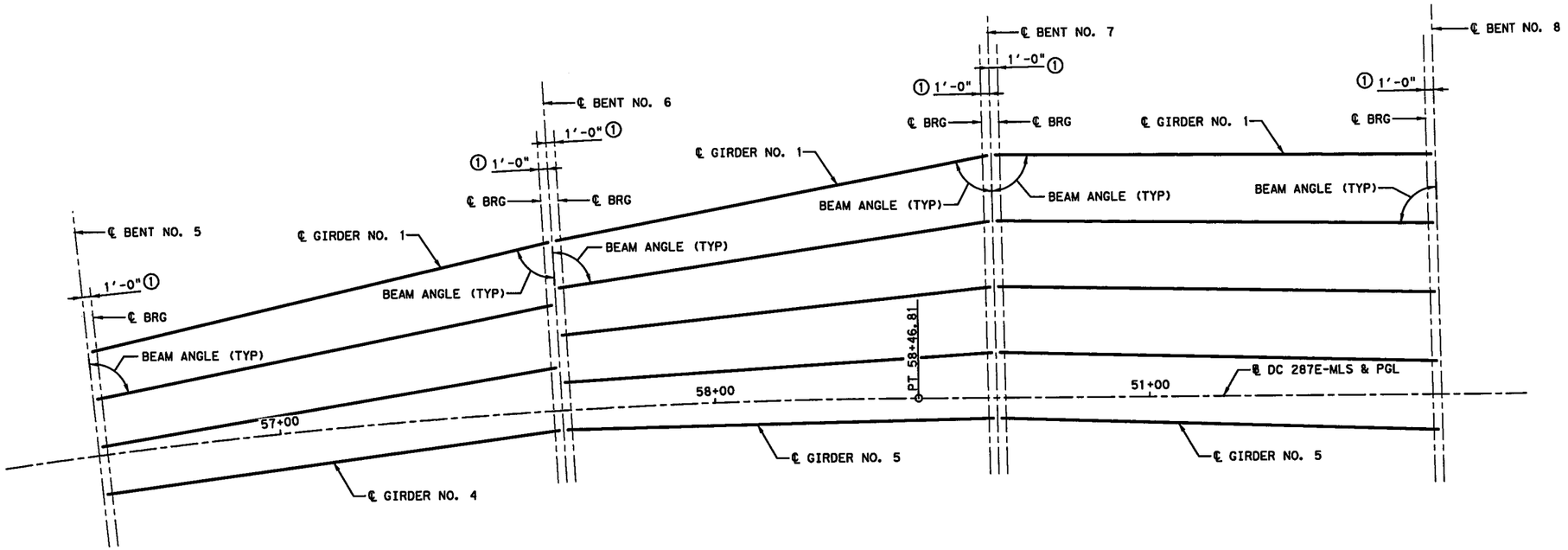

SPAN 5
(TX54 GIRDERS)

SPAN 6
(TX54 GIRDERS)

SPAN 7
(TX54 GIRDERS)

① SEE IGEB STANDARD FOR ORIENTATION OF DIMENSION.

② GIRDER LENGTHS SHOWN ARE BOTTOM GIRDER FLANGE LENGTHS WITH ADJUSTMENTS MADE FOR BEAM SLOPE.

BENT REPORT

BENT NO. 5 (S 82 21 55.60 W)
DISTANCE BETWEEN STATION LINE AND BEAM 1 16.000 L

		BEAM SPAC. (C.L. BENT)	BEAM ANGLE D M S
SPAN 5	BEAM 1	0.000	87 36 21
	BEAM 2	7.333	88 47 44
	BEAM 3	7.333	89 59 55
	BEAM 4	7.333	88 46 39
	TOTAL	22.000	

BENT NO. 6 (S 86 20 58.52 W)
DISTANCE BETWEEN STATION LINE AND BEAM 1 24.164 L

		BEAM SPAC. (C.L. BENT)	BEAM ANGLE D M S
SPAN 5	BEAM 1	0.000	83 37 19
	BEAM 2	9.586	84 48 41
	BEAM 3	9.586	86 1 1
	BEAM 4	9.586	87 14 17
	TOTAL	28.757	

BENT NO. 6 (S 86 20 58.52 W)
DISTANCE BETWEEN STATION LINE AND BEAM 1 24.164 L

		BEAM SPAC. (C.L. BENT)	BEAM ANGLE D M S
SPAN 6	BEAM 1	0.000	85 11 14
	BEAM 2	7.189	86 45 3
	BEAM 3	7.189	88 20 11
	BEAM 4	7.189	89 56 29
	BEAM 5	7.189	88 26 8
	TOTAL	28.757	

BENT NO. 7 (S 89 27 14.30 W)
DISTANCE BETWEEN STATION LINE AND BEAM 1 35.995 L

		BEAM SPAC. (C.L. BENT)	BEAM ANGLE D M S
SPAN 6	BEAM 1	0.000	82 4 58
	BEAM 2	10.029	83 38 47
	BEAM 3	10.029	85 13 55
	BEAM 4	10.029	86 50 13
	BEAM 5	10.029	88 27 35
	TOTAL	40.117	

BENT NO. 7 (S 89 27 14.30 W)
DISTANCE BETWEEN STATION LINE AND BEAM 1 35.995 L

		BEAM SPAC. (C.L. BENT)	BEAM ANGLE D M S
SPAN 7	BEAM 1	0.000	89 25 27
	BEAM 2	10.029	89 41 38
	BEAM 3	10.029	89 57 49
	BEAM 4	10.029	89 45 59
	BEAM 5	10.029	89 29 48
	TOTAL	40.117	

BENT NO. 8 (S 89 27 14.30 W)
DISTANCE BETWEEN STATION LINE AND BEAM 1 37.000 L

		BEAM SPAC. (C.L. BENT)	BEAM ANGLE D M S
SPAN 7	BEAM 1	0.000	89 25 27
	BEAM 2	10.500	89 41 38
	BEAM 3	10.500	89 57 49
	BEAM 4	10.500	89 45 59
	BEAM 5	10.500	89 29 48
	TOTAL	42.000	

BEAM REPORT

BEAM REPORT, SPAN 5

	HORIZONTAL DISTANCE C-C BENT	C-C BRG.	TRUE DISTANCE BOT. BM. FLG. ②	
BEAM 1	106.687	102.226	103.77	-0.0287
BEAM 2	105.952	101.493	103.04	-0.0300
BEAM 3	105.262	100.804	102.35	-0.0312
BEAM 4	104.620	100.161	101.71	-0.0325

BEAM REPORT, SPAN 6

	HORIZONTAL DISTANCE C-C BENT	C-C BRG.	TRUE DISTANCE BOT. BM. FLG. ②	
BEAM 1	102.243	100.243	101.82	-0.0381
BEAM 2	101.503	99.503	101.08	-0.0384
BEAM 3	100.839	98.839	100.41	-0.0387
BEAM 4	100.253	98.253	99.83	-0.0390
BEAM 5	99.747	97.747	99.32	-0.0392

BEAM REPORT, SPAN 7

	HORIZONTAL DISTANCE C-C BENT	C-C BRG.	TRUE DISTANCE BOT. BM. FLG. ②	
BEAM 1	100.005	98.005	99.61	-0.0457
BEAM 2	100.001	98.001	99.60	-0.0442
BEAM 3	100.000	98.000	99.59	-0.0426
BEAM 4	100.001	98.001	99.58	-0.0410
BEAM 5	100.004	98.004	99.58	-0.0395

STATE OF TEXAS
NESTOR R. RUBIANO
94294
LICENSED PROFESSIONAL ENGINEER

7/06/2012

HL 93 LOADING

PESC
P.E. Structural Consultants, Inc.
www.PEStructural.com
TBPE Firm No. F-1475

Texas Department of Transportation
© 2012

IH 35W FROM NORTH TARRANT PKWY TO IH 820

GIRDER LAYOUT (SPANS 5-7)

EB US 287 TO SB IH 35W ML

SCALE: NTS — SHEET 1 OF 1

DESIGN	FED. RD. DIV. NO.	FEDERAL AID PROJECT NO.		HIGHWAY NO.
AEB	6	(SEE TITLE SHEET)		IH 35W
GRAPHICS TLS	STATE	DISTRICT	COUNTY	SHEET NO.
CHECK NRR	TEXAS	FTW	TARRANT	1521
CHECK AB	CONTROL	SECTION	JOB	
	0014	16	255, ETC.	

FILENAME: S3BBR*287E-ML*GF*02.DGN
DRAWING DATE: 7/13/2012

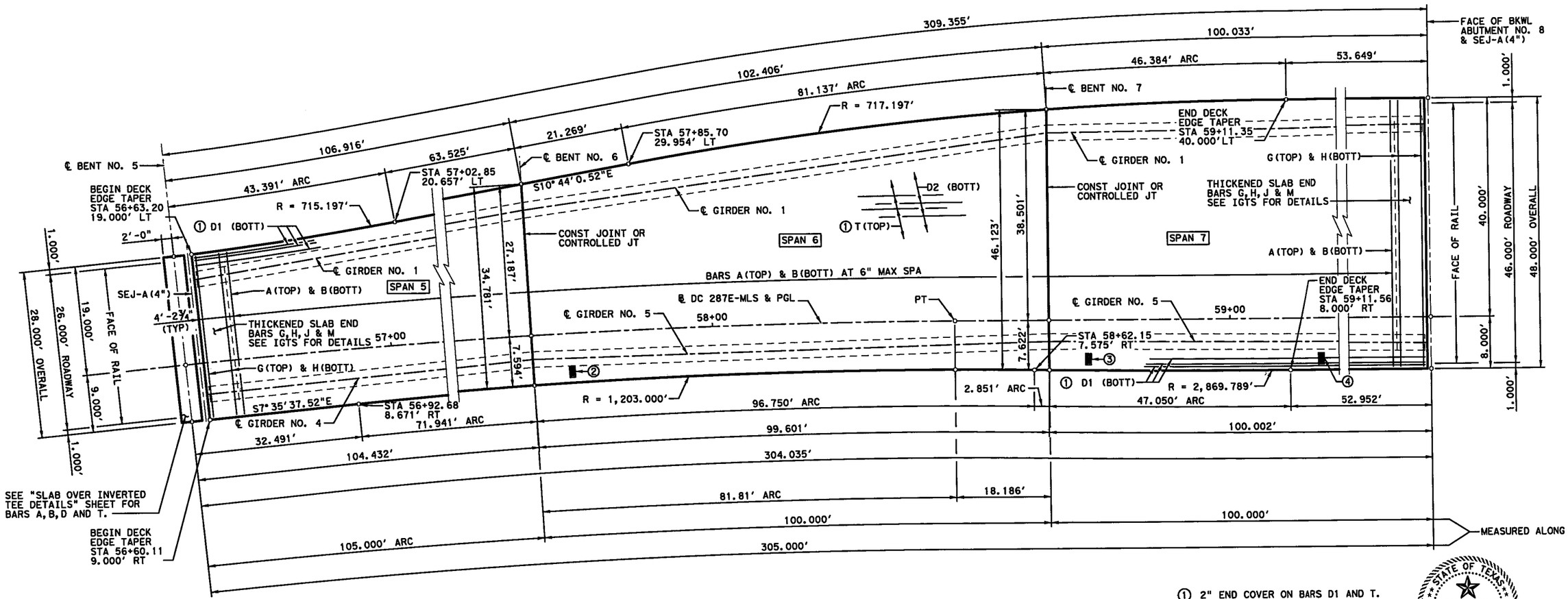

PLAN

① 2" END COVER ON BARS D1 AND T.

② DECK DRAIN BD-3(MOD)
STA 57+72.52
5.60' RT

③ DECK DRAIN BD-3(MOD)
STA 58+72.52
5.60' RT

④ DECK DRAIN BD-3(MOD)
STA 59+30.00
5.60' RT

STATE OF TEXAS
NESTOR R. RUBIANO
94294
LICENSED
PROFESSIONAL ENGINEER

7/06/2012

HL 93 LOADING

GENERAL NOTES:

1. DESIGNED ACCORDING TO AASHTO LRFD BRIDGE DESIGN SPECIFICATIONS, 5TH EDITION (2010).
2. CLASS "S"(HPC) CONCRETE STRENGTH F'C = 4,000 PSI.
3. ALL REINFORCING SHALL BE GRADE 60 AND EPOXY COATED.
4. SEE PCP OR PMDF STANDARDS FOR DETAILS AND QUANTITY ADJUSTMENTS IF EITHER OF THESE OPTIONS ARE USED.
5. SEE IGTS STANDARD FOR THICKENED SLAB END DETAILS.
6. SEE IGMS STANDARD FOR MISCELLANEOUS SLAB DETAILS.
7. SEE RAIL STANDARD FOR RAIL ANCHORAGE IN SLAB.
8. BAR LAPS, WHERE REQUIRED, TO BE AS FOLLOWS:
   #4 = 2'-1"
   #5 = 2'-7"

PESC P.E. Structural Consultants, Inc.
www.PEStructural.com
TBPE Firm No. F-1475

Texas Department of Transportation
© 2012

IH 35W FROM NORTH TARRANT PKWY TO IH 820

305.00' PRESTRESSED CONCRETE I-GIRDER UNIT

EB US 287 TO SB IH 35W ML

SCALE: NTS — SHEET 1 OF 2

DESIGN	FED.RD. DIV.NO.	FEDERAL AID PROJECT NO.		HIGHWAY NO.
AEB	6	(SEE TITLE SHEET)		IH 35W
GRAPHICS TLS	STATE	DISTRICT	COUNTY	SHEET NO.
CHECK NRR	TEXAS	FTW	TARRANT	1522
CHECK AB	CONTROL	SECTION	JOB	
	0014	16	255, ETC.	

FILENAME: S3BBR#287E-MLS#PB#03.DGN

DRAWING DATE: 7/13/2012

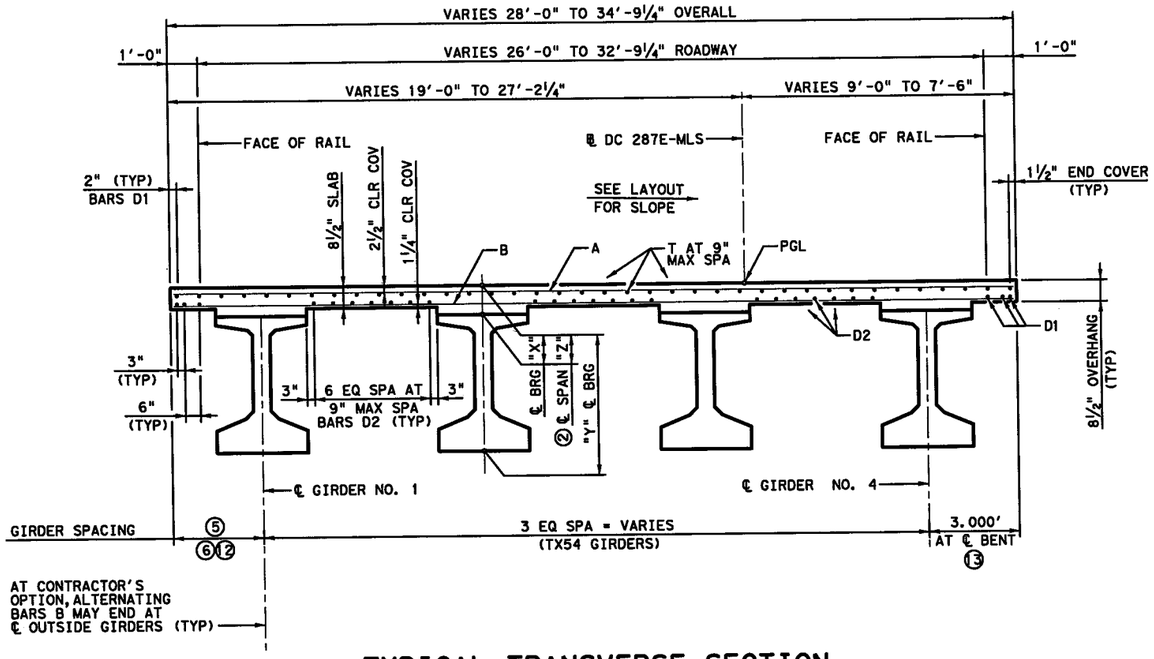

TYPICAL TRANSVERSE SECTION

(SPAN 5)

BAR TABLE	
BAR	SIZE
A	#5
B	#5
D	#5
G	#5
H	#5
J	#5
M	#5
T	#4

SPAN NO.	GIRDER NO.	"A" FT	"B" FT
5	1	0.076	0.109
	2	0.091	0.131
	3	0.089	0.128
	4	0.070	0.101
6	1	0.089	0.126
	2	0.087	0.124
	3	0.084	0.119
	4	0.082	0.115
	5	0.064	0.091
7	1	0.079	0.113
	2-4	0.095	0.135
	5	0.080	0.114

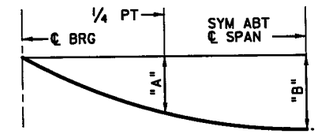

DEAD LOAD DEFLECTION DIAGRAM

CALCULATED DEFLECTIONS SHOWN ARE DUE TO THE CONCRETE SLAB ON INTERIOR GIRDERS ONLY (EC = 5000 KSI). ADJUST VALUES AS REQUIRED FOR EXTERIOR GIRDERS AND IF OPTIONAL SLAB FORMING IS USED. THESE VALUES MAY REQUIRE FIELD VERIFICATION.

TABLE OF ESTIMATED QUANTITIES

SPAN	REINF CONC SLAB	PRESTR CONC I-GIRDERS (TX54) ⑪	CL S CONC (HPC)	REINFORCING STEEL ⑩
NO.	SF	LF	CY	LB
5	3,197	410.87	93.0	20,781
6	4,112	502.46	122.3	26,728
7	4,771	497.96	137.2	31,012
TOTAL	12,080	1,411.29	352.5	78,521

⑩ REINFORCING STEEL WEIGHT IS CALCULATED USING AN APPROXIMATE FACTOR OF 6.5 LBS PER SQ FT.

⑪ LENGTHS SHOWN ARE BOTTOM OF GIRDER FLANGE LENGTHS WITH ADJUSTMENTS MADE FOR BEAM SLOPE. SEE GIRDER LAYOUT FOR GIRDER LENGTHS.

TABLE OF SECTION DEPTHS

SPAN NO.	GIRDER NO.	"X" AT ℄ BRG	"Y" AT ℄ BRG	⑨ "Z" AT ℄ SPAN
5	1	1'- ¼"	5'-6 ¼"	10 ⅛"
	2 & 3	1'- ¼"	5'-6 ¼"	10 ¼"
	4	1'- ¼"	5'-6 ¼"	10"
6	1	1'-1 ½"	5'-7 ½"	11 ⅝"
	2	1'-1 ½"	5'-7 ½"	11 ¼"
	3	1'-1 ½"	5'-7 ½"	10 ⅞"
	4	1'-1 ½"	5'-7 ½"	10 ⅜"
	5	1'-1 ½"	5'-7 ½"	9 ¾"
7	1	1'-1 ½"	5'-7 ½"	9 ½"
	2	1'-1 ½"	5'-7 ½"	9 ⅞"
	3	1'-1 ½"	5'-7 ½"	10 ⅛"
	4 & 5	1'-1 ½"	5'-7 ½"	10 ¼"

⑨ THEORETICAL DIMENSION

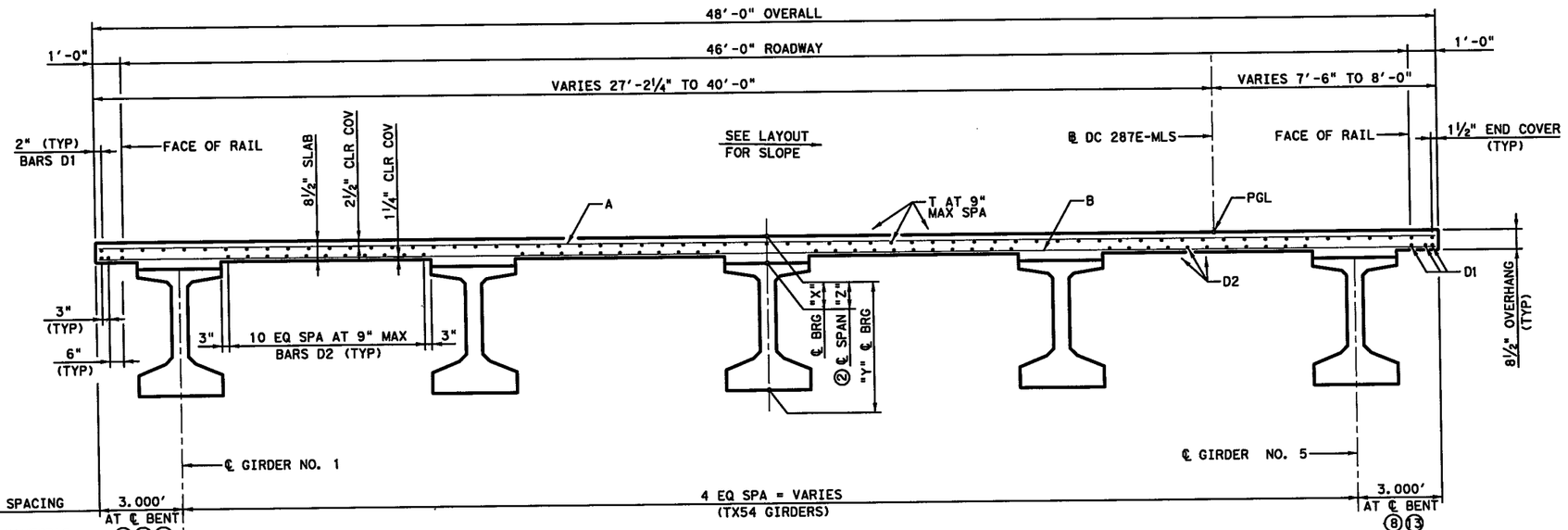

TYPICAL TRANSVERSE SECTION

(SPANS 6 & 7)

⑫ SPAN 5 ~ 3.000' MAX, 2.223' MIN
SPAN 6 ~ 4.418' MAX
SPAN 7 ~ 3.575' MAX, 2.500' MIN

⑬ SPAN 5 ~ 3.000' MAX, 2.073' MIN
SPAN 6 ~ 2.205' MIN
SPAN 7 ~ 3.580' MAX, 3.000' MIN

⑤ 3.000' AT ℄ BENT 6
⑥ 3.023' AT ℄ BENT 7
⑦ 2.500' AT ℄ BENT 8
⑧ 3.500' AT ℄ BENT 8

STATE OF TEXAS
NESTOR R. RUBIANO
94294
LICENSED PROFESSIONAL ENGINEER

7/06/2012

HL 93 LOADING

PESC P.E. Structural Consultants, Inc.
www.PEStructural.com
TBPE Firm No. F-1475

Texas Department of Transportation
© 2012

IH 35W FROM NORTH TARRANT PKWY TO IH 820

305.00' PRESTRESSED CONCRETE I-GIRDER UNIT

EB US 287 TO SB IH 35W ML

SCALE: NTS				SHEET 2 OF 2
DESIGN AEB	FED.RD. DIV.NO. 6	FEDERAL AID PROJECT NO. (SEE TITLE SHEET)		HIGHWAY NO. IH 35W
GRAPHICS TLS	STATE	DISTRICT	COUNTY	SHEET NO.
CHECK NRR	TEXAS	FTW	TARRANT	1523
CHECK AB	CONTROL 0014	SECTION 16	JOB 255, ETC.	

FILENAME: S3BBR*287E-MLS*PB*04.DGN

DRAWING DATE: 7/13/2012

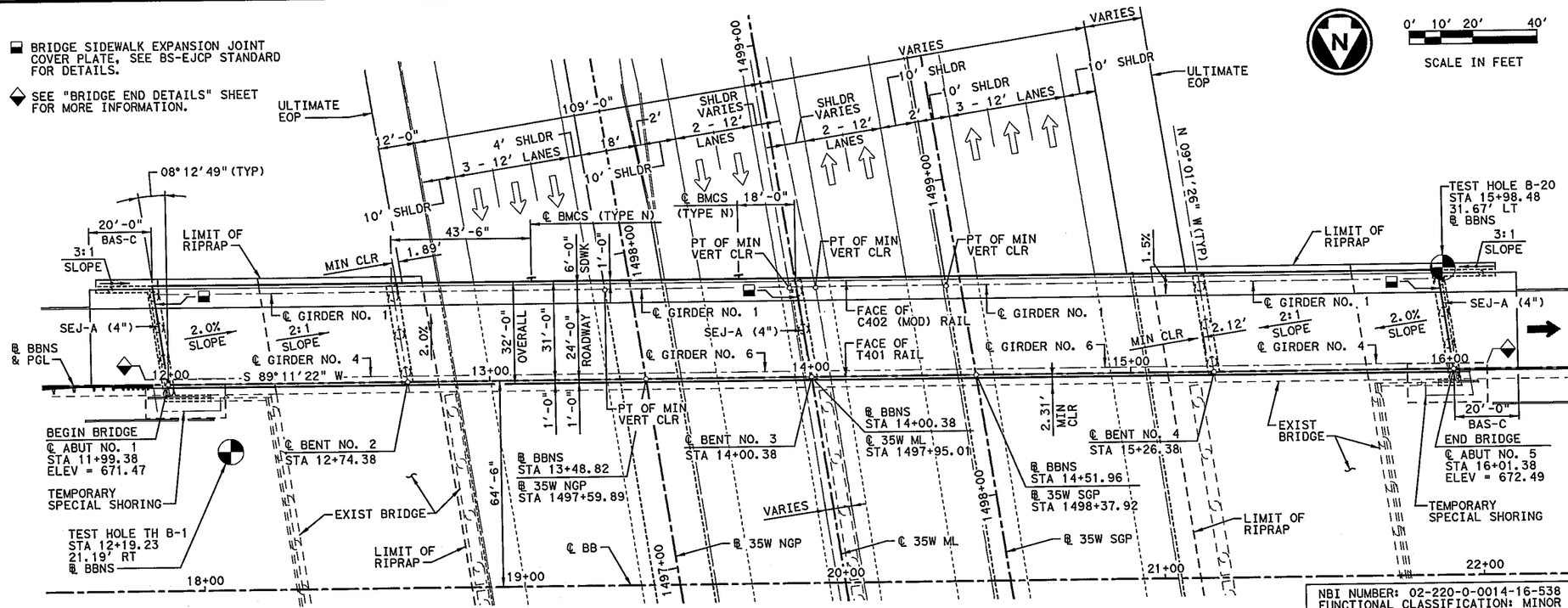

PLAN

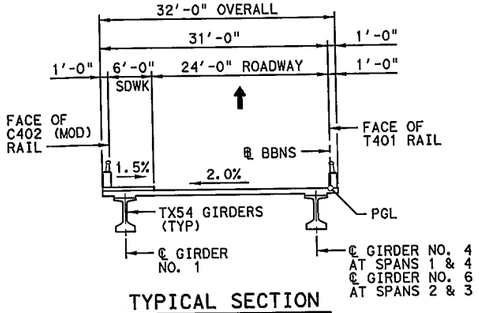

TYPICAL SECTION

GENERAL NOTES:

1. DESIGNED ACCORDING TO AASHTO LRFD BRIDGE DESIGN SPECIFICATIONS, 5TH EDITION (2010).
2. ALL DIMENSIONS ARE EITHER HORIZONTAL OR VERTICAL AND MUST BE CORRECTED FOR GRADE, CROWN, AND/OR SUPERELEVATION.
3. "D" DENOTES BENTS WITH DOWEL BARS "D" AND SLOTTED HOLES AT ENDS OF EXTERIOR GIRDERS ONLY.
4. SEE "BORING LOGS - BRIDGE" SHEETS FOR GEOTECHNICAL INFORMATION. FOR DRILLING LOG INFORMATION RELATED TO TH B-1 REFERENCE DESIGN PLANS FOR CSJ 0041-16-211 DATED FEB 1995.
5. CONTRACTOR TO VERIFY LOCATION OF ALL UTILITIES PRIOR TO EXCAVATION.
6. THE "H" VALUES SHOWN ARE ESTIMATED COLUMN HEIGHTS. CONTRACTOR IS RESPONSIBLE FOR CALCULATING ACTUAL COLUMN HEIGHTS BASED ON FIELD CONDITIONS.
7. SEE ILLUMINATION PLANS AND RELATED SUMMARY SHEETS FOR UNDERPASS LIGHT LOCATIONS, JUNCTION BOXES, FUSED DISCONNECT SWITCHES, CONDUIT DETAILS AND QUANTITIES.
8. ALLOWANCE FOR FUTURE RESURFACING: 23.3 PSF.

HL 93 LOADING

NBI NUMBER: 02-220-0-0014-16-538
FUNCTIONAL CLASSIFICATION: MINOR COLLECTOR URBAN FRONTAGE ROAD
DESIGN SPEED: 40 MPH
ADT: 7,850 (2030)

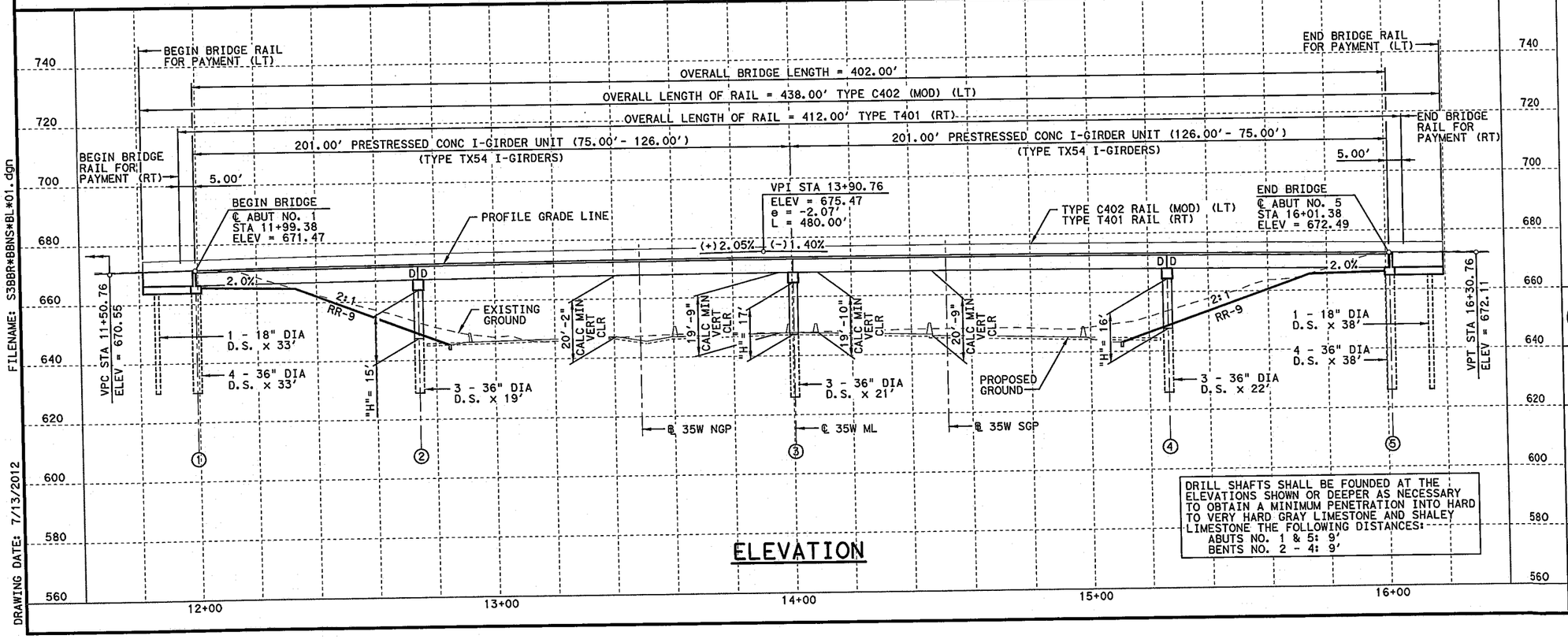

ELEVATION

DRILL SHAFTS SHALL BE FOUNDED AT THE ELEVATIONS SHOWN OR DEEPER AS NECESSARY TO OBTAIN A MINIMUM PENETRATION INTO HARD TO VERY HARD GRAY LIMESTONE AND SHALEY LIMESTONE THE FOLLOWING DISTANCES:
ABUTS NO. 1 & 5: 9'
BENTS NO. 2 - 4: 9'

THOMAS G. ASHCRAFT
81411
REGISTERED PROFESSIONAL ENGINEER
STATE OF TEXAS
7/5/12

CP&Y, INC.
TBPE REGISTRATION NO. F-1741

Texas Department of Transportation
© 2012

IH 35W FROM NORTH TARRANT PKWY TO IH 820

BRIDGE LAYOUT

BASSWOOD BLVD NS TURNAROUND
IH 35W UNDERPASS

SCALE: 1" = 40' H & V
SHEET 1 OF 1

DESIGN	FED. RD. DIV. NO.	FEDERAL AID PROJECT NO.		HIGHWAY NO.
LVA	6	(SEE TITLE SHEET)		IH 35W
GRAPHICS	STATE	DISTRICT	COUNTY	SHEET NO.
GWS	TEXAS	FTW	TARRANT	
CHECK	CONTROL	SECTION	JOB	1524
TGA	0014	16	255, ETC.	
CHECK				
LVA				

FILENAME: S3BBR*BBNS*BL*01.dgn
DRAWING DATE: 7/13/2012

SUMMARY OF ESTIMATED QUANTITIES

BID ITEM	403 2001	416 2001	416 2004	420 2041	420 2042	420 2256	420 2292	422 2003	425 2068	428 2002	432 2001	442 2048
BID ITEM DESCRIPTION / BRIDGE ELEMENT	TEMPORARY SPL SHORING	DRILL SHAFT (18 IN)	DRILL SHAFT (36 IN)	CL C CONC (HPC) (ABUT)	CL C CONC (HPC) (BENT)	CL S CONC (HPC) (APPR SLAB)	CL S CONC (HPC) (BRDG SDWLK)	REINF CONC SLAB (HPC) (CL S)	PRESTR CONC GIRDER (TX54)	CONC SURF TREATMENT (CLASS II)	RIPRAP (CONC) (4 IN)	STRUCTURAL STEEL (MISC NON-BRIDGE)
	SF	LF	LF	CY	CY	CY	CY	SF	LF	SY	CY	LB
2 - ABUTMENTS	480	71	284	58.0		64	5.9			244	160	
3 - INTERIOR BENTS			186		79.6					38		
2 - 201.000' PRESTRESSED CONCRETE I-GIRDER UNITS							65.2	12,864	2,102.04	1,519		651
TOTALS	480	71	470	58.0	79.6	64	71.1	12,864	2,102.04	1,801	160	651

SUMMARY OF ESTIMATED QUANTITIES

BID ITEM	450	450	450 2612	454 2001	636 2001
BID ITEM DESCRIPTION / BRIDGE ELEMENT	RAIL (TY T401) (HPC)	RAIL (TY C402) (MOD) (HPC)	RAIL (TY C221) (HPC)	SEALED EXPANSION JOINT (4 IN) (SEJ-A)	ALUMINUM SIGNS (TY A)
	LF	LF	LF	LF	SF
2 - ABUTMENTS	10.0	36.0	25.1	52	
3 - INTERIOR BENTS				26	
2 - 201.000' PRESTRESSED CONCRETE I-GIRDER UNITS	402.0	402.0			28
TOTALS	412.0	438.0	25.1	78	28

BEARING SEAT ELEVATIONS

		BEAM 1	BEAM 2	BEAM 3	BEAM 4	BEAM 5	BEAM 6
BENT 1	(FWD)	665.157	665.356	665.554	665.752		
BENT 2	(BK)	666.223	666.415	666.606	666.798		
	(FWD)	666.247	666.362	666.477	666.592	666.706	666.821
BENT 3	(BK)	667.161	667.270	667.378	667.486	667.594	667.702
	(FWD)	667.167	667.275	667.383	667.491	667.599	667.707
BENT 4	(BK)	666.959	667.060	667.162	667.263	667.364	667.465
	(FWD)	666.947	667.115	667.284	667.452		
BENT 5	(BK)	666.297	666.459	666.621	666.782		

STATE OF TEXAS
THOMAS G. ASHCRAFT
81411
REGISTERED
PROFESSIONAL ENGINEER

Thomas G. Ashcraft
8/29/12

HL 93 LOADING

CP&Y, INC.
TBPE REGISTRATION NO. F-1741

Texas Department of Transportation
© 2012

IH 35W FROM NORTH TARRANT PKWY TO IH 820

ESTIMATED QUANTITIES AND BEARING SEAT ELEV.

BASSWOOD BLVD NS TURNAROUND
IH 35W UNDERPASS

SCALE: NTS

SHEET 1 OF 1

DESIGN	FED.RD. DIV.NO.	FEDERAL AID PROJECT NO.		HIGHWAY NO.
LVA	6	(SEE TITLE SHEET)		IH 35W
GRAPHICS	STATE	DISTRICT	COUNTY	SHEET NO.
GWS	TEXAS	FTW	TARRANT	1525
CHECK LVA	CONTROL	SECTION	JOB	
CHECK TGA	0014	16	255, ETC.	

DRAWING DATE: 7/13/2012 FILENAME: S38BR_BBNS_EQ_01.dgn

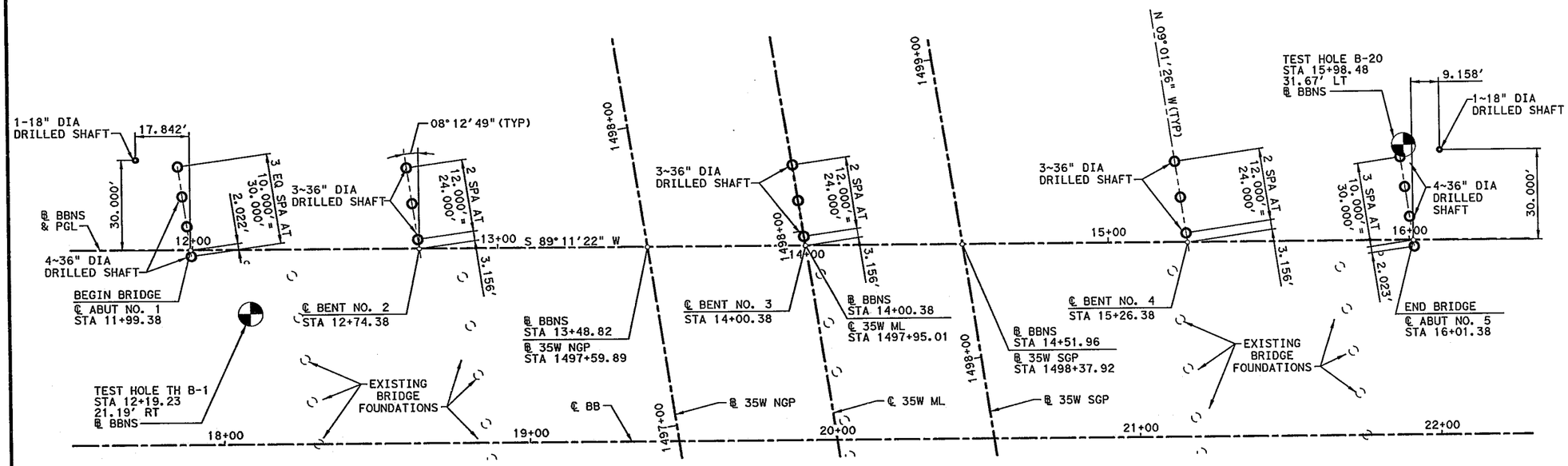

PLAN

0' 10' 20' 40'

SCALE IN FEET

GENERAL NOTES:

1. FOR ANY TEMPORARY SHORING REQUIRED AT INTERIOR BENT LOCATIONS, FOLLOW TxDOT STANDARD SPECIFICATION ITEM 403.
2. SEE "BORING LOG - BRIDGE" SHEETS FOR GEOTECHNICAL INFORMATION. FOR DRILLING LOG INFORMATION RELATED TO TH B-1 REFERENCE DESIGN PLANS FOR CSJ 0014-16-211 DATED FEB 1995.
3. ⊕ DENOTES TEST HOLE LOCATION.
4. CONTRACTOR TO VERIFY LOCATION OF ALL UTILITIES PRIOR TO EXCAVATION.

STATE OF TEXAS
THOMAS G. ASHCRAFT
81411
REGISTERED PROFESSIONAL ENGINEER

7/5/12

HL 93 LOADING

CP&Y, INC.
TBPE REGISTRATION NO. F-1741

Texas Department of Transportation
© 2012

IH 35W FROM NORTH TARRANT PKWY TO IH 820

FOUNDATION LAYOUT

BASSWOOD BLVD NS TURNAROUND

IH 35W UNDERPASS

SCALE: 1" = 40' SHEET 1 OF 1

DESIGN	FED. RD. DIV. NO.	FEDERAL AID PROJECT NO.		HIGHWAY NO.
LVA	6	(SEE TITLE SHEET)		IH 35W
GRAPHICS PMB	STATE	DISTRICT	COUNTY	SHEET NO.
CHECK LVA	TEXAS	FTW	TARRANT	1526
CHECK TGA	CONTROL	SECTION	JOB	
	0014	16	255, ETC.	

DRAWING DATE: 7/13/2012 FILENAME: S3BBR_BBNS_FL_01.dgn

TABLE OF ELEVATIONS				
CAP	"A"	"B"	"C"	"D"
	665.741	664.970	671.540	671.477
WINGWALLS	"F"	"G"	"H"	"I"
	665.962	664.635	671.774	671.156
DRILLED SHAFT	DS1	DS2	DS3	DS4
	662.545	662.767	662.989	663.211
SHAFT TIP	629.545	629.767	629.989	630.211
AS-BUILT SHAFT TIP				

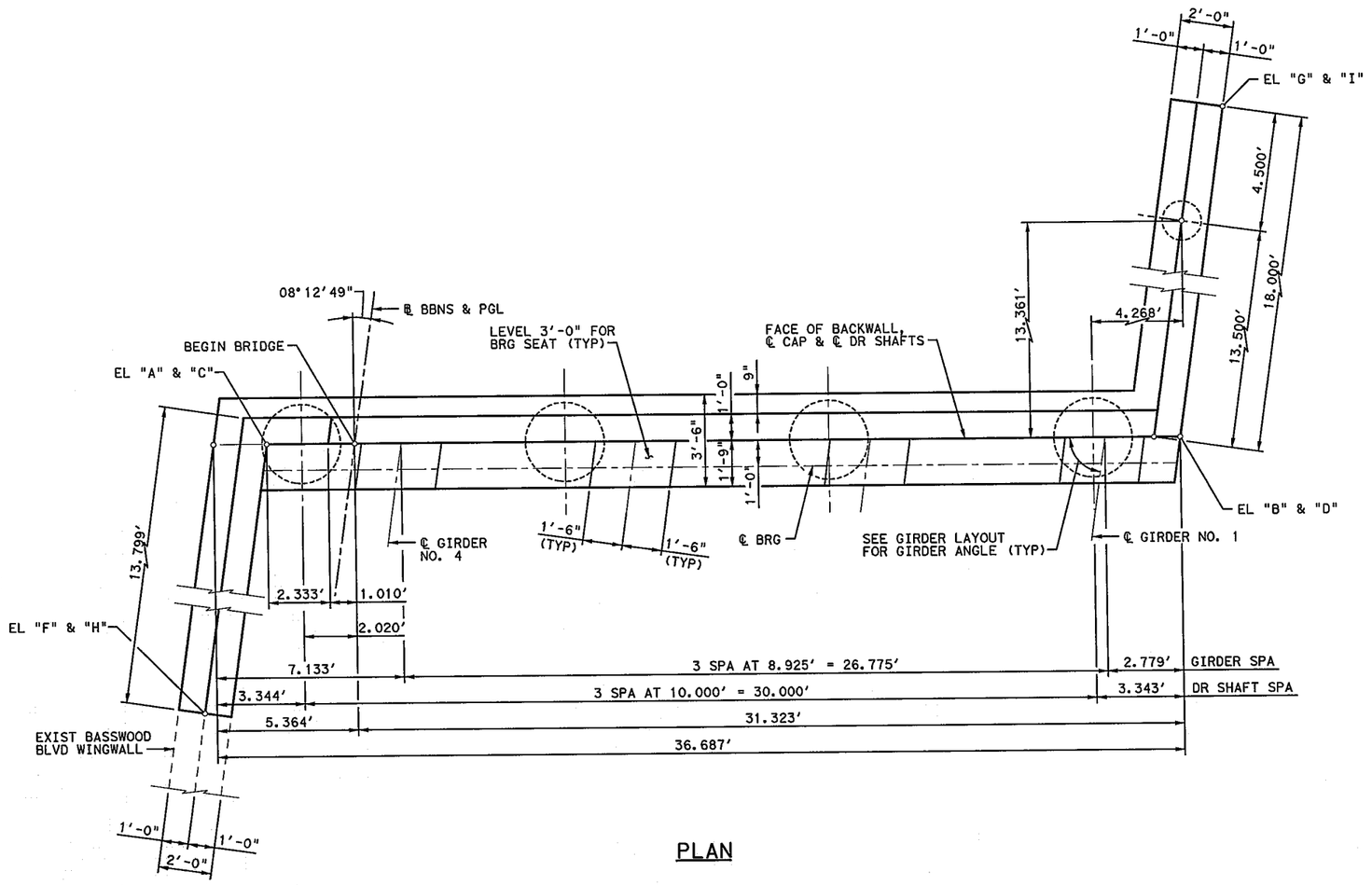

PLAN

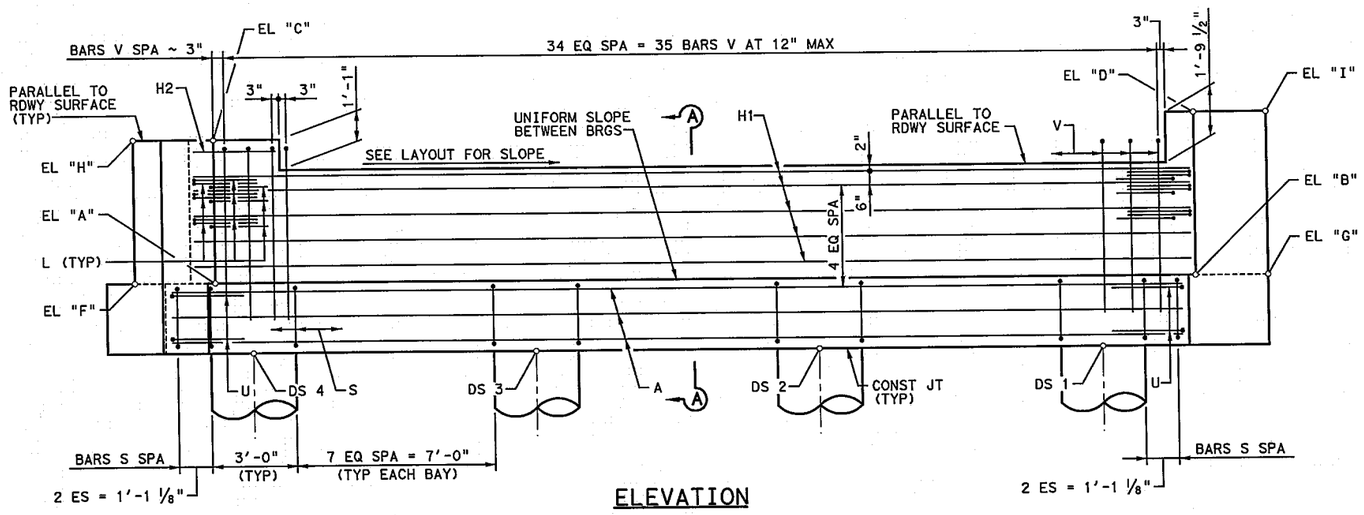

ELEVATION

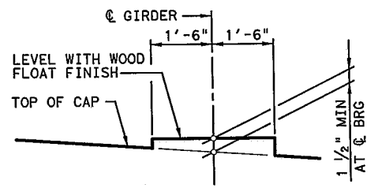

BEARING SEAT DETAIL

(BEARING SURFACE SHALL BE CLEAN AND FREE OF ALL LOOSE MATERIAL BEFORE PLACING BEARING PAD.)

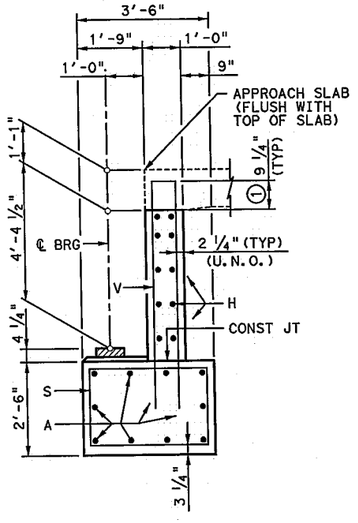

SECTION A-A

① INCREASE AS REQUIRED TO MAINTAIN 3 3/4" FROM FINISHED GRADE.

GENERAL NOTES:

1. DESIGNED ACCORDING TO AASHTO LRFD BRIDGE DESIGN SPECIFICATIONS, 5TH EDITION (2010).
2. CLASS "C" (HPC) CONCRETE STRENGTH F'C = 3,600 PSI.
3. ALL CAP AND WALL REINFORCING SHALL BE GRADE 60.
4. CONTRACTOR TO VERIFY ALL DIMENSIONS IN THE FIELD PRIOR TO ORDERING MATERIALS OR COMMENCING CONSTRUCTION.
5. SEE FD STANDARD FOR ALL FOUNDATION DETAILS AND NOTES.
6. SEE RAIL STANDARD FOR RAIL ANCHORAGE IN WINGWALLS.
7. CALCULATED FOUNDATION LOADS:
   CAP DRILLED SHAFTS = 79 TONS/D.S.
   WINGWALL DRILLED SHAFTS = 10 TONS/D.S.

STATE OF TEXAS
THOMAS G. ASHCRAFT
81411
REGISTERED
PROFESSIONAL ENGINEER

7/5/12

HL 93 LOADING

CP&Y, INC.
TBPE REGISTRATION NO. F-1741

Texas Department of Transportation
© 2012

IH 35W FROM NORTH TARRANT PKWY TO IH 820

ABUTMENT NO. 1

BASSWOOD BLVD NS TURNAROUND
IH 35W UNDERPASS

SCALE: NTS — SHEET 1 OF 2

DESIGN	FED. RD. DIV. NO.	FEDERAL AID PROJECT NO.		HIGHWAY NO.
LVA	6	(SEE TITLE SHEET)		IH 35W
GRAPHICS GWS	STATE	DISTRICT	COUNTY	SHEET NO.
CHECK LVA	TEXAS	FTW	TARRANT	1527
CHECK TGA	CONTROL	SECTION	JOB	
	0014	16	255, ETC.	

FILENAME: S3BBR*BBNS*AB*01.dgn
DRAWING DATE: 7/13/2012

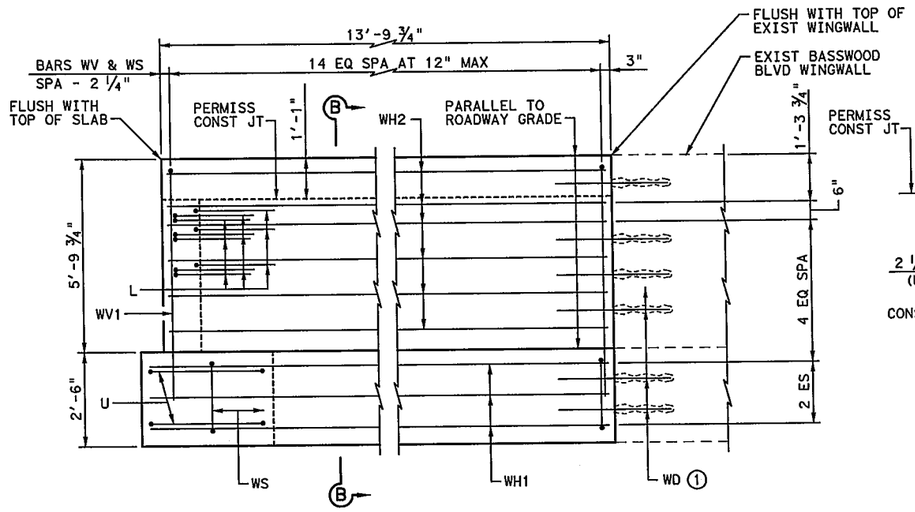

WINGWALL ELEVATION RIGHT

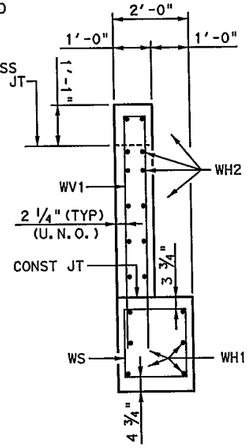

SECTION B-B

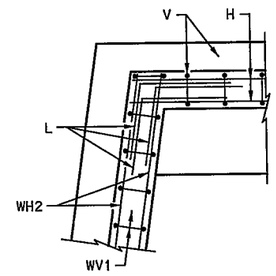

BACKWALL RIGHT

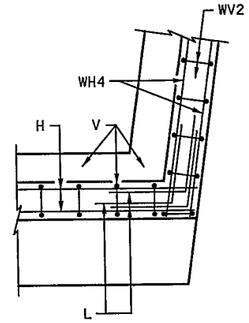

BACKWALL LEFT

CORNER DETAILS

TABLE OF ESTIMATED QUANTITIES				
BAR	NO.	SIZE	LENGTH	WEIGHT
A	10	#11	35'- 8"	1,895
H1	10	#6	35'- 4"	531
H2	2	#6	3'- 0"	9
L	9	#6	4'- 0"	54
S	30	#5	11'- 4"	355
U	4	#6	8'- 1"	49
V	35	#5	14'- 2"	517
wH1	6	#6	15'- 3"	137
wH2	12	#6	13'- 6"	243
wH3	6	#6	19'- 5"	175
wH4	14	#6	17'- 8"	371
wS	34	#4	7'- 8"	174
wV1	15	#5	14'- 5"	226
wV2	19	#5	15'-10"	314
wD	6	#6	3'- 0"	27
REINFORCING STEEL			LB	5,077
CL C CONC (HPC) (ABUT)			CY	30.4

(1) DRILL AND GROUT 1'-6" MINIMUM INTO EXISTING WINGWALL. GROUT TO BE A NON-SHRINK GROUT.

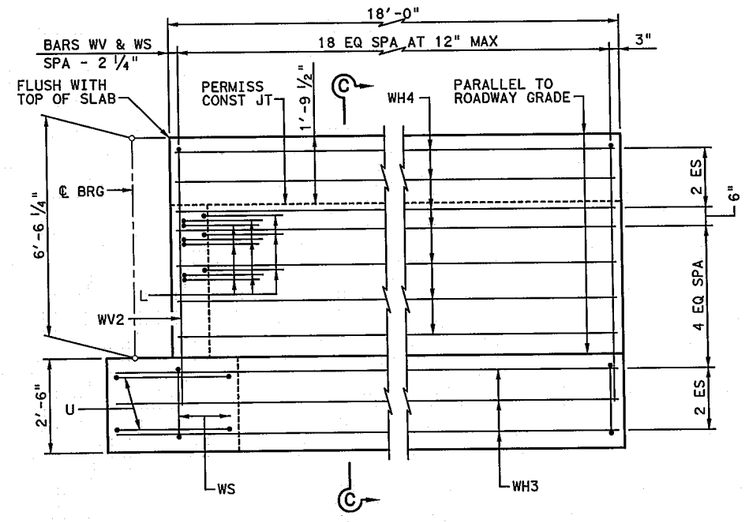

WINGWALL ELEVATION LEFT

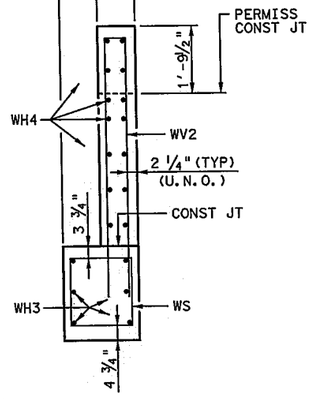

SECTION C-C

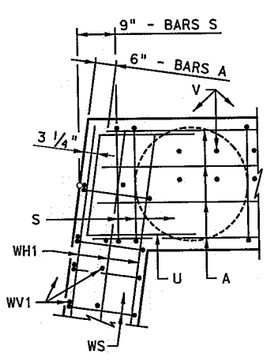

CAP RIGHT

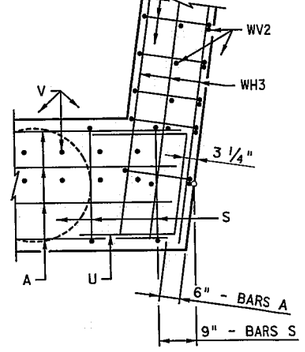

CAP LEFT

CORNER DETAILS

HL 93 LOADING

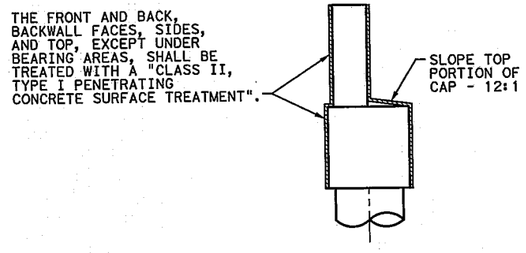

CONCRETE SURFACE TREATMENT DETAIL

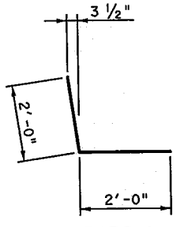

BARS L

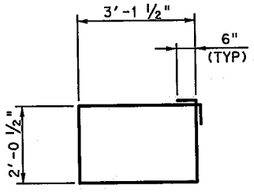

BARS S

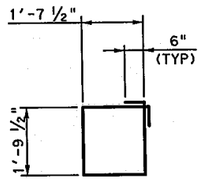

BARS WS

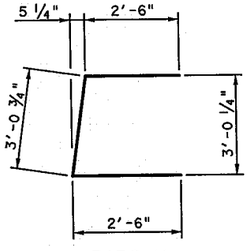

BARS U

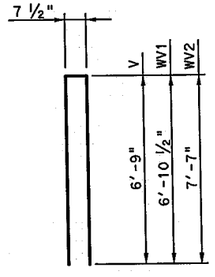

BARS V, WV1 & WV2

STATE OF TEXAS
THOMAS G. ASHCRAFT
81411
REGISTERED PROFESSIONAL ENGINEER
Thomas G. Ashcraft
7/5/12

CP&Y, INC.
TBPE REGISTRATION NO. F-1741

Texas Department of Transportation
© 2012

IH 35W FROM NORTH TARRANT PKWY TO IH 820

ABUTMENT NO. 1

BASSWOOD BLVD NS TURNAROUND

IH 35W UNDERPASS

SCALE: NTS — SHEET 2 OF 2

DESIGN	FED. RD. DIV. NO.	FEDERAL AID PROJECT NO.		HIGHWAY NO.
LVA	6	(SEE TITLE SHEET)		IH 35W
GRAPHICS GWS	STATE	DISTRICT	COUNTY	SHEET NO.
CHECK LVA	TEXAS	FTW	TARRANT	1528
CHECK TGA	CONTROL	SECTION	JOB	
	0014	16	255, ETC.	

FILENAME: S3BBR_BBNS_AB_02.dgn

DRAWING DATE: 7/13/2012

TABLE OF ELEVATIONS				
CAP	"A"	"B"	"C"	"D"
	666.122	666.750	672.635	672.555
WINGWALLS	"F"	"G"	"H"	"I"
	665.892	666.827	672.413	672.639
DRILLED SHAFT	DS1	DS2	DS3	DS4
	663.682	663.863	664.045	664.226
SHAFT TIP	625.682	625.863	626.045	626.226
AS-BUILT SHAFT TIP				

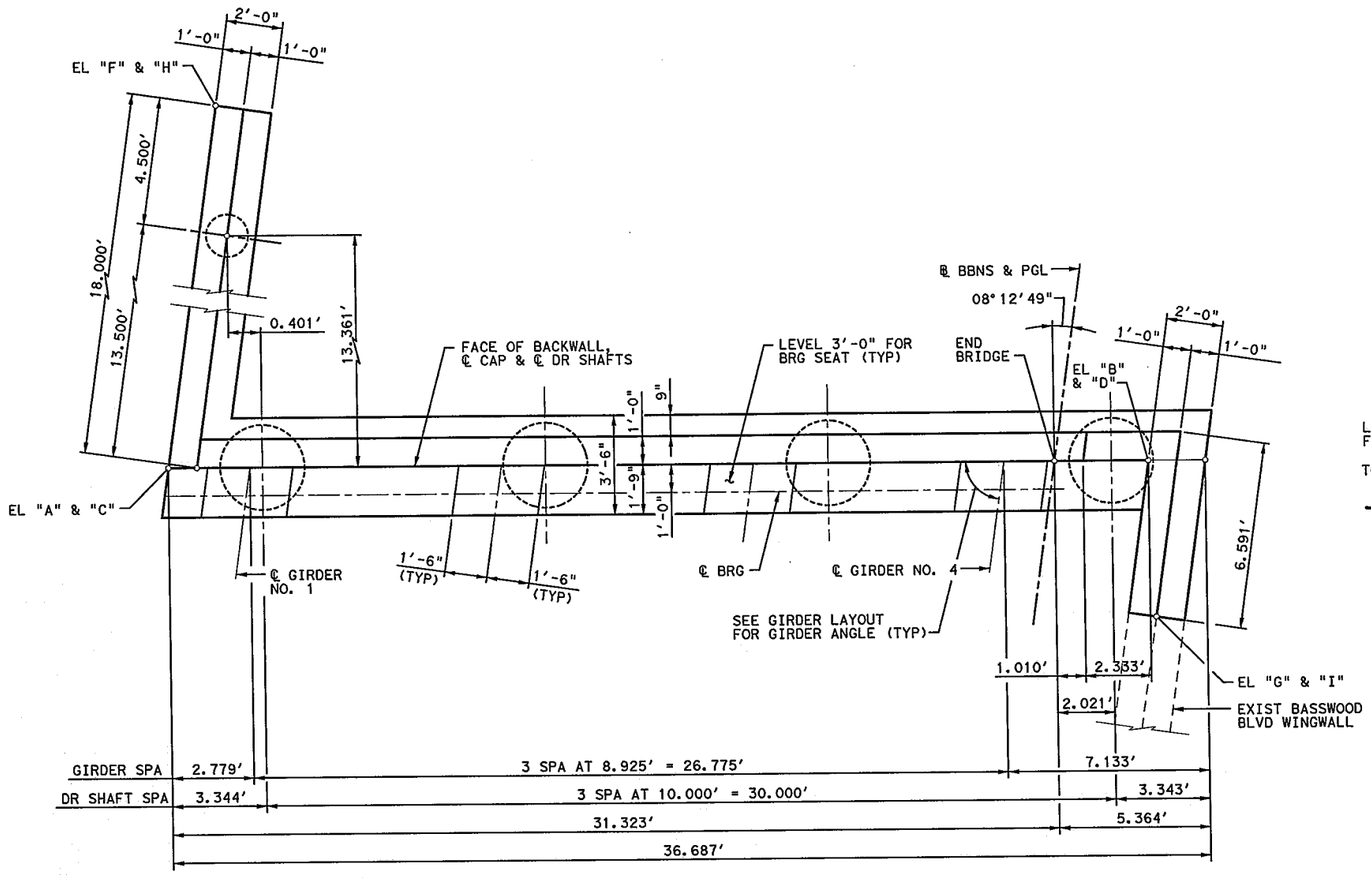

PLAN

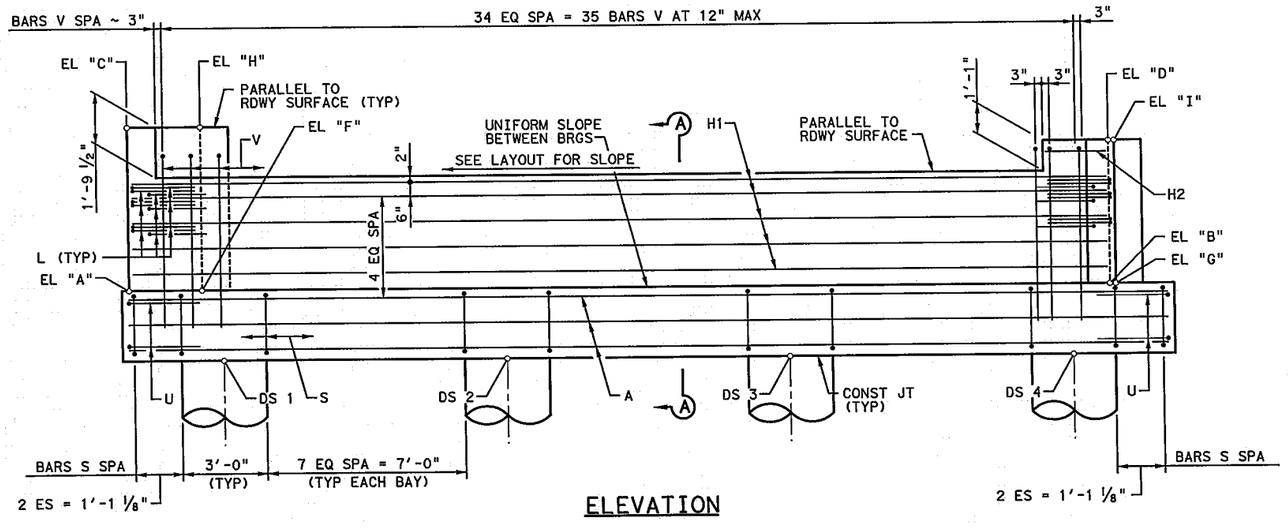

ELEVATION

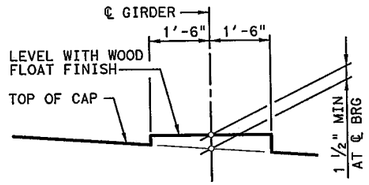

BEARING SEAT DETAIL

(BEARING SURFACE SHALL BE CLEAN AND FREE OF ALL LOOSE MATERIAL BEFORE PLACING BEARING PAD.)

GENERAL NOTES:

1. DESIGNED ACCORDING TO AASHTO LRFD BRIDGE DESIGN SPECIFICATIONS, 5TH EDITION (2010).
2. CLASS "C" (HPC) CONCRETE STRENGTH F'C = 3,600 PSI.
3. ALL CAP AND WALL REINFORCING SHALL BE GRADE 60.
4. CONTRACTOR TO VERIFY ALL DIMENSIONS IN THE FIELD PRIOR TO ORDERING MATERIALS OR COMMENCING CONSTRUCTION.
5. SEE FD STANDARD FOR ALL FOUNDATION DETAILS AND NOTES.
6. SEE RAIL STANDARD FOR RAIL ANCHORAGE IN WINGWALLS.
7. CALCULATED FOUNDATION LOADS:
   CAP DRILLED SHAFTS = 78 TONS/D.S.
   WINGWALL DRILLED SHAFTS = 10 TONS/D.S.

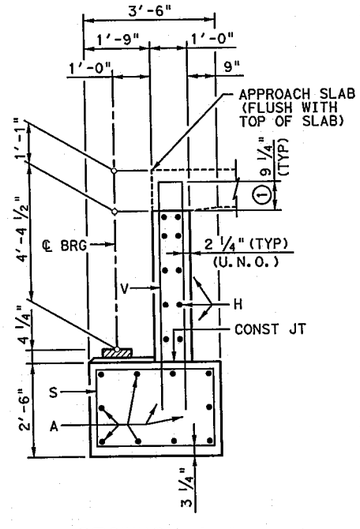

SECTION A-A

① INCREASE AS REQUIRED TO MAINTAIN 3 ¾" FROM FINISHED GRADE.

STATE OF TEXAS
THOMAS G. ASHCRAFT
81411
REGISTERED
PROFESSIONAL ENGINEER

Thomas G. Ashcraft
7/5/12

HL 93 LOADING

CP&Y, INC.
TBPE REGISTRATION NO. F-1741

Texas Department of Transportation
© 2012

IH 35W FROM NORTH TARRANT PKWY TO IH 820

ABUTMENT NO. 5

BASSWOOD BLVD NS TURNAROUND
IH 35W UNDERPASS

SCALE: NTS — SHEET 1 OF 2

DESIGN	FED.RD. DIV.NO.	FEDERAL AID PROJECT NO.		HIGHWAY NO.
LVA	6	(SEE TITLE SHEET)		IH 35W
GRAPHICS GWS	STATE	DISTRICT	COUNTY	SHEET NO.
CHECK LVA	TEXAS	FTW	TARRANT	1529
CHECK TGA	CONTROL	SECTION	JOB	
	0014	16	255, ETC.	

FILENAME: S3BBR_BBNS_AB_03.dgn
DRAWING DATE: 7/13/2012

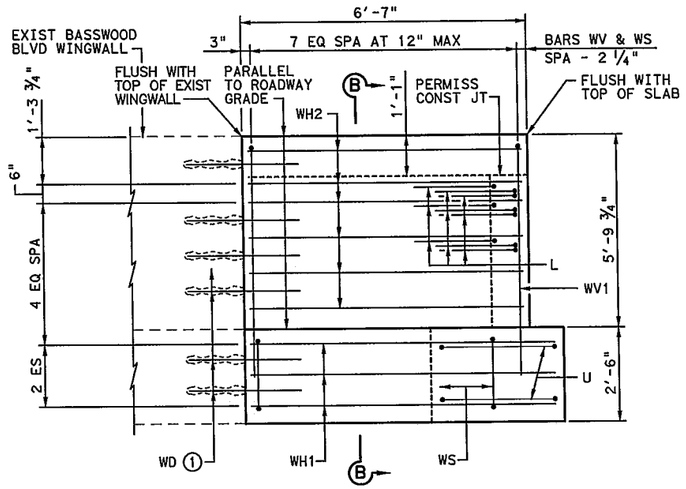

WINGWALL ELEVATION RIGHT

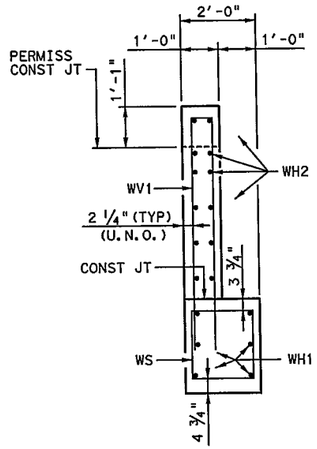

SECTION B-B

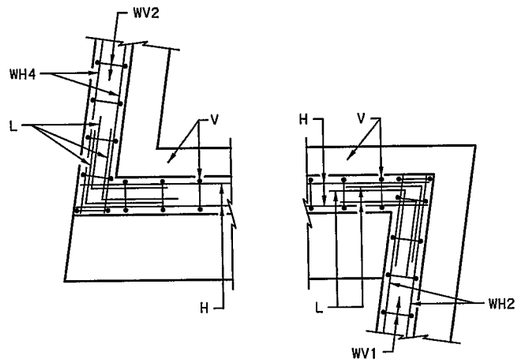

BACKWALL LEFT BACKWALL RIGHT

CORNER DETAILS

TABLE OF ESTIMATED QUANTITIES				
BAR	NO.	SIZE	LENGTH	WEIGHT
A	10	#11	35'- 8"	1,895
H1	10	#6	35'- 4"	531
H2	2	#6	3'- 0"	9
L	9	#6	4'- 0"	54
S	30	#5	11'- 4"	355
U	4	#6	8'- 1"	49
V	35	#5	14'- 2"	517
wH1	6	#6	8'- 0"	72
wH2	12	#6	6'- 3"	113
wH3	6	#6	19'- 5"	175
wH4	14	#6	17'- 8"	371
wS	27	#4	7'- 8"	138
wV1	8	#5	14'- 5"	120
wV2	19	#5	15'-10"	314
wD	6	#6	3'- 0"	27
REINFORCING STEEL			LB	4,740
CL C CONC (HPC) (ABUT)			CY	27.6

(1) DRILL AND GROUT 1'-6" MINIMUM INTO EXISTING WINGWALL. GROUT TO BE A NON-SHRINK GROUT.

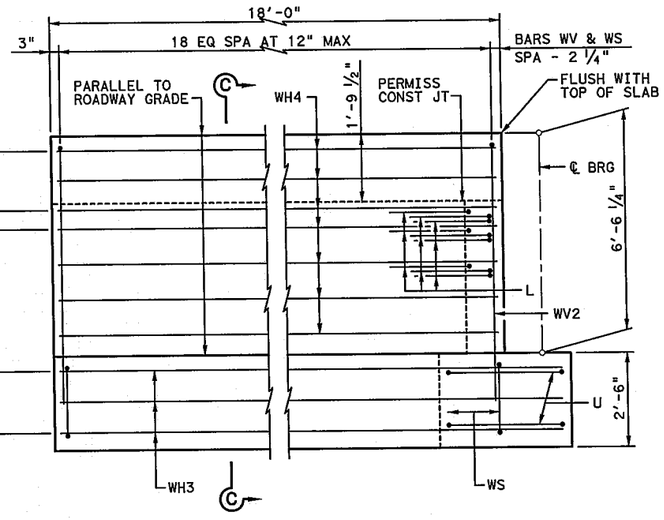

WINGWALL ELEVATION LEFT

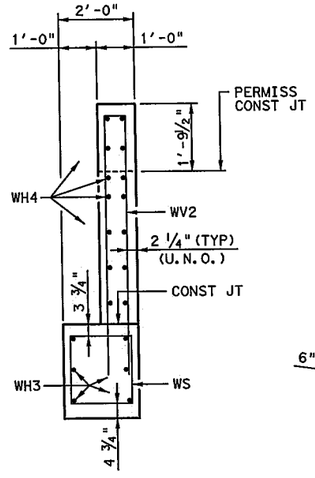

SECTION C-C

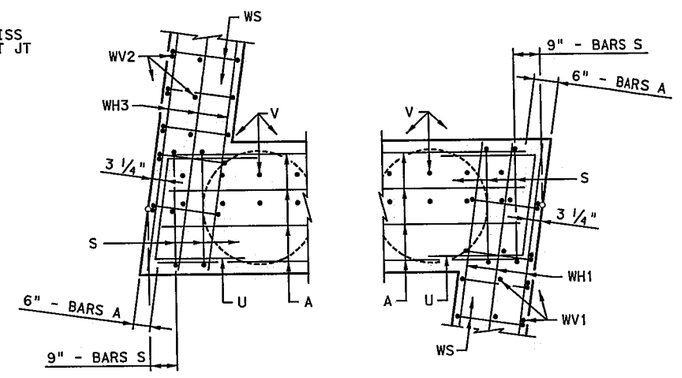

CAP LEFT CAP RIGHT

CORNER DETAILS

HL 93 LOADING

THE FRONT AND BACK, BACKWALL FACES, SIDES, AND TOP, EXCEPT UNDER BEARING AREAS, SHALL BE TREATED WITH A "CLASS II, TYPE I PENETRATING CONCRETE SURFACE TREATMENT".

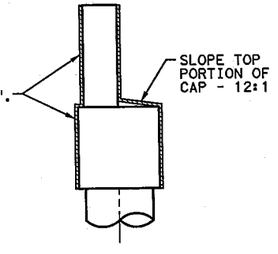

CONCRETE SURFACE TREATMENT DETAIL

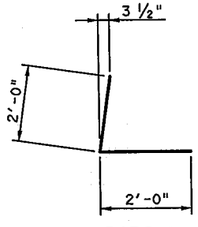

BARS L

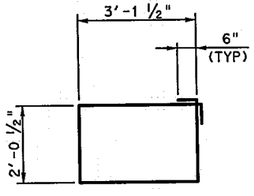

BARS S

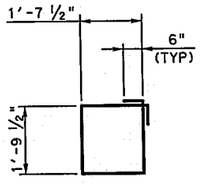

BARS WS

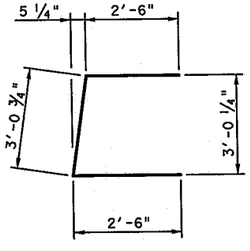

BARS U

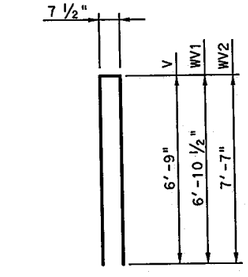

BARS V, WV1 & WV2

STATE OF TEXAS
THOMAS G. ASHCRAFT
81411
REGISTERED
PROFESSIONAL ENGINEER

7/5/12

CP&Y, INC.
TBPE REGISTRATION NO. F-1741

Texas Department of Transportation

© 2012

IH 35W FROM NORTH TARRANT PKWY TO IH 820

ABUTMENT NO. 5

BASSWOOD BLVD NS TURNAROUND

IH 35W UNDERPASS

SCALE: NTS SHEET 2 OF 2

DESIGN	FED.RD. DIV.NO.	FEDERAL AID PROJECT NO.		HIGHWAY NO.
LVA	6	(SEE TITLE SHEET)		IH 35W
GRAPHICS GWS	STATE	DISTRICT	COUNTY	SHEET NO.
CHECK LVA	TEXAS	FTW	TARRANT	1530
CHECK TGA	CONTROL 0014	SECTION 16	JOB 255, ETC.	

FILENAME: S3BBR_BBNS_AB_04.dgn
DRAWING DATE: 7/13/2012

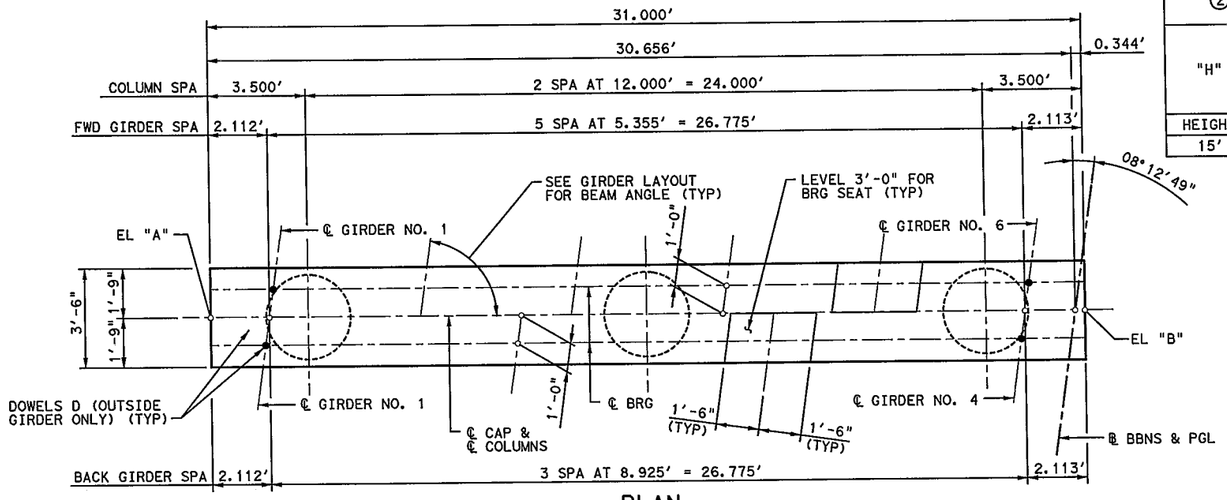

PLAN

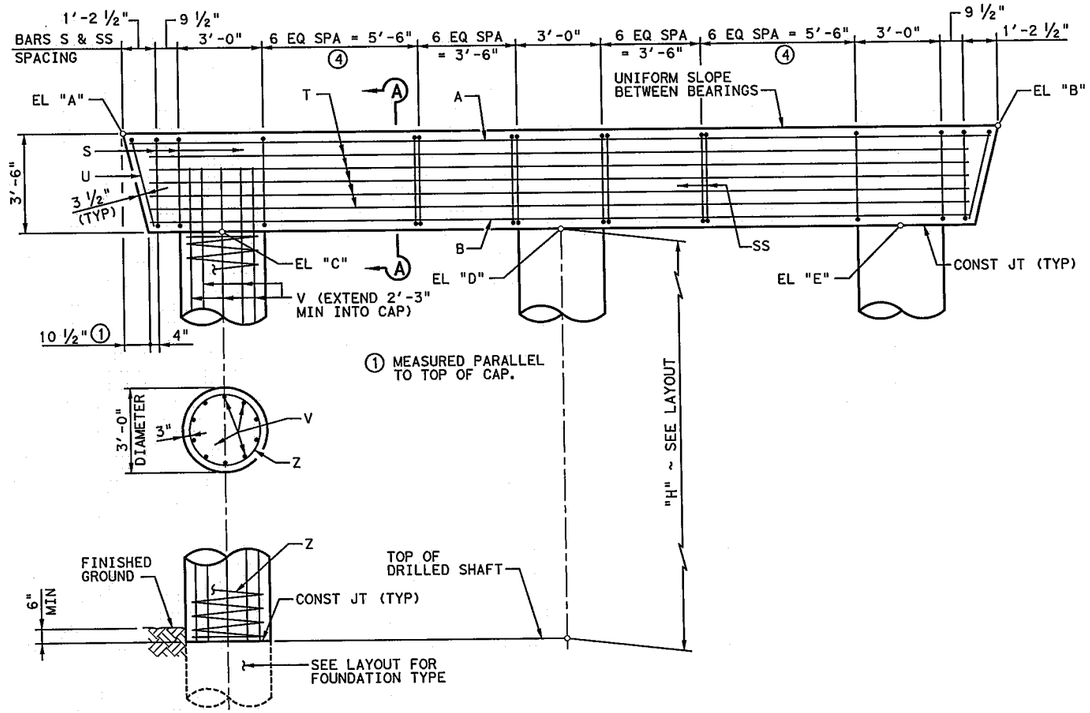

ELEVATION

② TABLE OF COLUMN QUANTITIES

"H"	CL C CONC (HPC) (COLUMN)	BARS V 30 - # 9		BARS Z 3 - #3 SPIRAL	
HEIGHT	CY	LENGTH	WEIGHT	LENGTH	WEIGHT
15'	11.8	17'- 3"	1,760	252'	284

③ TOTAL ESTIMATED QUANTITIES

REINF STEEL	CL C CONC (HPC) (BENT)
LB	CY
5,213	25.7

TABLE OF ELEVATIONS

"A"	"B"	"C"	"D"	"E"
666.053	666.718	662.628	662.886	663.143
TOP OF DS ④		DS 1	DS 2	DS 3
		647.628	647.886	648.143
SHAFT TIP		628.628	628.886	629.143
AS-BUILT SHAFT TIP				

TABLE OF CONSTANT QUANTITIES

BAR	NO.	SIZE	LENGTH	WEIGHT
A	8	#11	30'- 7"	1,300
B	6	#11	29'- 0"	924
D	4	1 ¼" D	1'- 8"	28
S	30	#5	13'- 6"	422
SS	14	#5	11'-10"	173
T	10	#5	29'- 0"	302
U	2	#5	9'- 7"	20
REINFORCING STEEL			LB	3,169
CL C CONC (HPC) (CAP)			CY	13.9

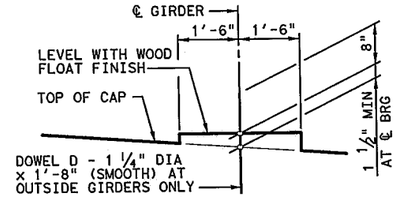

BEARING SEAT DETAIL

(BEARING SURFACE SHALL BE CLEAN AND FREE OF ALL LOOSE MATERIAL BEFORE PLACING BEARING PAD.)

② ADJUST BARS V LENGTH BY 1 FT AND BARS Z LENGTH BY 15.74 FT FOR EACH LINEAR FOOT OF VARIATION IN "H" VALUE.

③ ADJUST REINFORCING STEEL TOTAL BY 140 LBS AND CLASS "C" CONCRETE TOTAL BY 0.7854 CY FOR EACH LINEAR FOOT OF VARIATION IN "H" VALUE.

④ TOP OF DRILLED SHAFT ELEVATIONS WERE ESTIMATED BASED ON GROUND ELEVATION INFORMATION AVAILABLE AT THE TIME OF DESIGN. CONTRACTOR SHALL CONFIRM THESE ELEVATIONS PRIOR TO DRILLING.

GENERAL NOTES:

1. DESIGNED ACCORDING TO AASHTO LRFD BRIDGE DESIGN SPECIFICATIONS, 5TH EDITION (2010).
2. CLASS "C" (HPC) CONCRETE STRENGTH F'C = 3,600 PSI.
3. ALL REINFORCING SHALL BE GRADE 60.
4. COLUMN REINFORCING MAY BE GRADE 40.
5. SEE FD STANDARD FOR ALL FOUNDATION DETAILS AND NOTES.
6. CALCULATED FOUNDATION LOADS: 241 TONS/D.S.

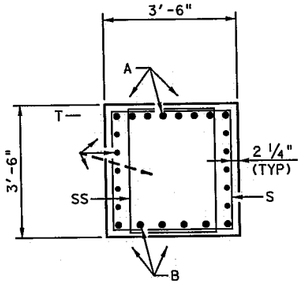

SECTION A-A

④ BARS S ONLY IN THIS SECTION.

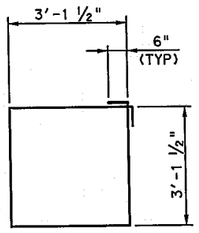

BARS S

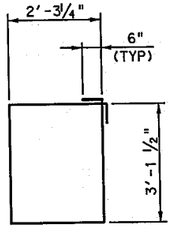

BARS SS

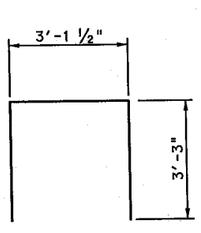

BARS U

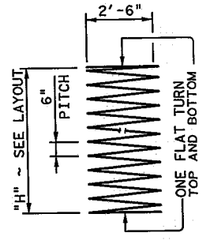

BARS Z

HL 93 LOADING

CP&Y, INC.
TBPE REGISTRATION NO. F-1741

Texas Department of Transportation

© 2012

IH 35W FROM NORTH TARRANT PKWY TO IH 820

INTERIOR BENT NO. 2

BASSWOOD BLVD NS TURNAROUND

IH 35W UNDERPASS

SCALE: NTS — SHEET 1 OF 1

DESIGN	FED.RD. DIV.NO.	FEDERAL AID PROJECT NO.		HIGHWAY NO.
LVA	6	(SEE TITLE SHEET)		IH 35W
GRAPHICS PMB	STATE	DISTRICT	COUNTY	SHEET NO.
CHECK LVA	TEXAS	FTW	TARRANT	1531
CHECK TGA	CONTROL 0014	SECTION 16	JOB 255, ETC.	

STATE OF TEXAS — THOMAS G. ASHCRAFT — 81411 — REGISTERED PROFESSIONAL ENGINEER

Thomas G. Ashcraft 7/5/12

FILENAME: S38BR_BBNS_IB_01.dgn

DRAWING DATE: 7/13/2012

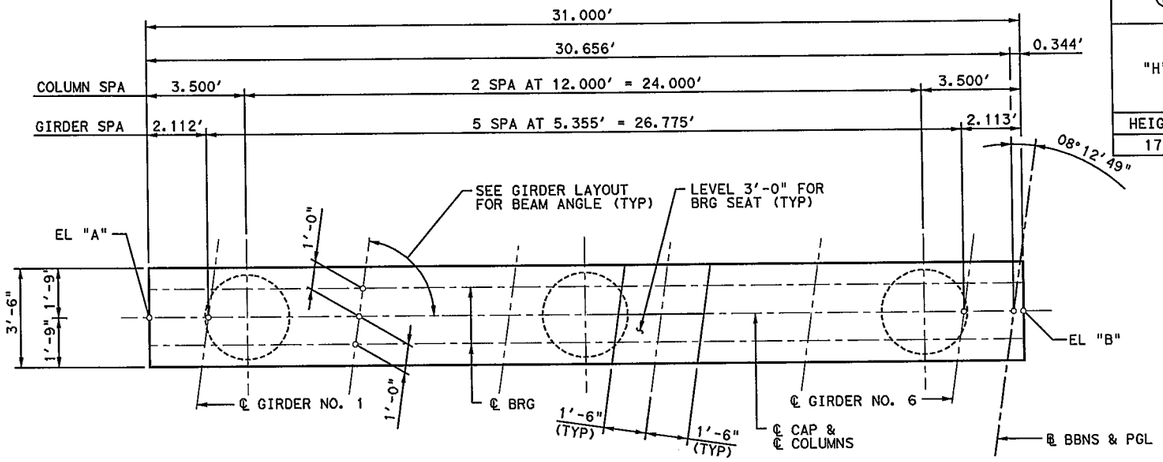

PLAN

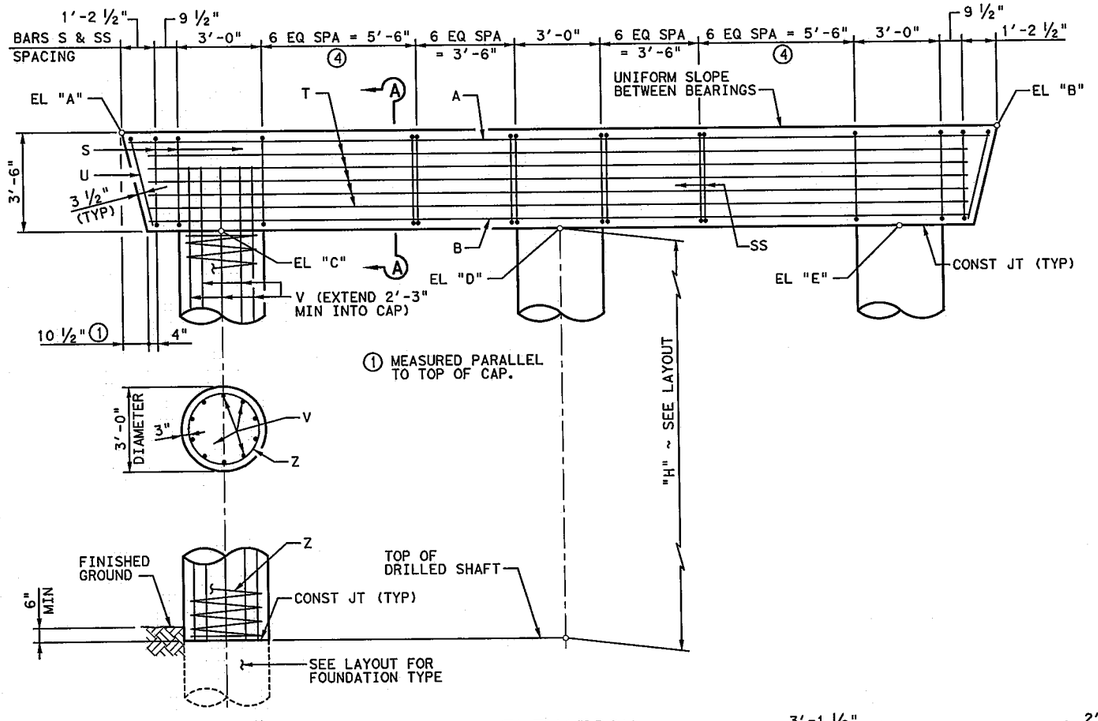

ELEVATION

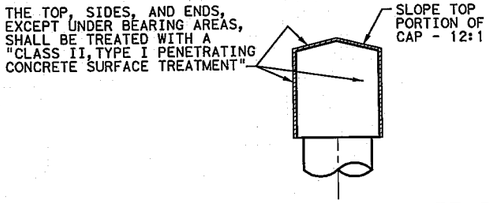

CONCRETE SURFACE TREATMENT DETAIL

② TABLE OF COLUMN QUANTITIES

"H"	CL C CONC (HPC) (COLUMN)	BARS V 30 - # 9		BARS Z 3 - #3 SPIRAL	
HEIGHT	CY	LENGTH	WEIGHT	LENGTH	WEIGHT
17'	13.4	19'- 3"	1,964	284'	320

③ TOTAL ESTIMATED QUANTITIES

REINF STEEL	CL C CONC (HPC) (BENT)
LB	CY
5,425	27.4

TABLE OF ELEVATIONS

"A"	"B"	"C"	"D"	"E"
666.993	667.620	663.564	663.807	664.049
TOP OF DS ④		DS 1	DS 2	DS 3
		646.564	646.807	647.049
SHAFT TIP		625.564	625.807	626.049
AS-BUILT SHAFT TIP				

TABLE OF CONSTANT QUANTITIES

BAR	NO.	SIZE	LENGTH	WEIGHT
A	8	#11	30'- 7"	1,300
B	6	#11	29'- 0"	924
S	30	#5	13'- 6"	422
SS	14	#5	11'-10"	173
T	10	#5	29'- 0"	302
U	2	#5	9'- 7"	20
REINFORCING STEEL			LB	3,141
CL C CONC (HPC) (CAP)			CY	14.0

② ADJUST BARS V LENGTH BY 1 FT AND BARS Z LENGTH BY 15.74 FT FOR EACH LINEAR FOOT OF VARIATION IN "H" VALUE.

③ ADJUST REINFORCING STEEL TOTAL BY 140 LBS AND CLASS "C" CONCRETE TOTAL BY 0.7854 CY FOR EACH LINEAR FOOT OF VARIATION IN "H" VALUE.

④ TOP OF DRILLED SHAFT ELEVATIONS WERE ESTIMATED BASED ON GROUND ELEVATION INFORMATION AVAILABLE AT THE TIME OF DESIGN. CONTRACTOR SHALL CONFIRM THESE ELEVATIONS PRIOR TO DRILLING.

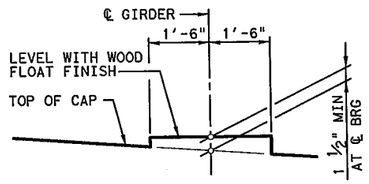

BEARING SEAT DETAIL

(BEARING SURFACE SHALL BE CLEAN AND FREE OF ALL LOOSE MATERIAL BEFORE PLACING BEARING PAD.)

GENERAL NOTES:

1. DESIGNED ACCORDING TO AASHTO LRFD BRIDGE DESIGN SPECIFICATIONS, 5TH EDITION (2010).
2. CLASS "C" (HPC) CONCRETE STRENGTH F'C = 3,600 PSI.
3. ALL REINFORCING SHALL BE GRADE 60.
4. COLUMN REINFORCING MAY BE GRADE 40.
5. SEE FD STANDARD FOR ALL FOUNDATION DETAILS AND NOTES.
6. CALCULATED FOUNDATION LOADS: 306 TONS/D.S.

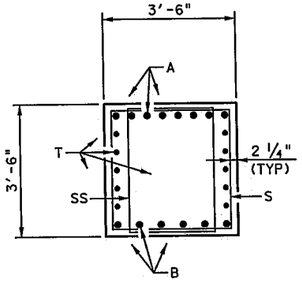

SECTION A-A

④ BARS S ONLY IN THIS SECTION.

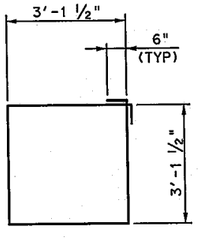

BARS S

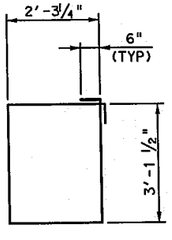

BARS SS

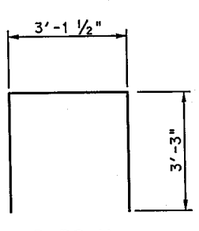

BARS U

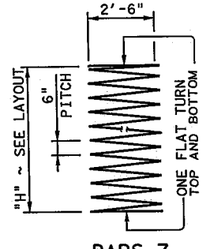

BARS Z

HL 93 LOADING

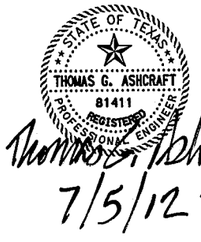

CP&Y, INC.
TBPE REGISTRATION NO. F-1741

Texas Department of Transportation
© 2012

IH 35W FROM NORTH TARRANT PKWY TO IH 820

INTERIOR BENT NO. 3

BASSWOOD BLVD NS TURNAROUND

IH 35W UNDERPASS

SCALE: NTS — SHEET 1 OF 1

DESIGN	FED.RD. DIV.NO.	FEDERAL AID PROJECT NO.		HIGHWAY NO.
LVA	6	(SEE TITLE SHEET)		IH 35W
GRAPHICS PMB	STATE	DISTRICT	COUNTY	SHEET NO.
CHECK LVA	TEXAS	FTW	TARRANT	1532
CHECK TGA	CONTROL	SECTION	JOB	
	0014	16	255, ETC.	

FILENAME: S3BBR*BBNS*IB*02.dgn

DRAWING DATE: 7/13/2012

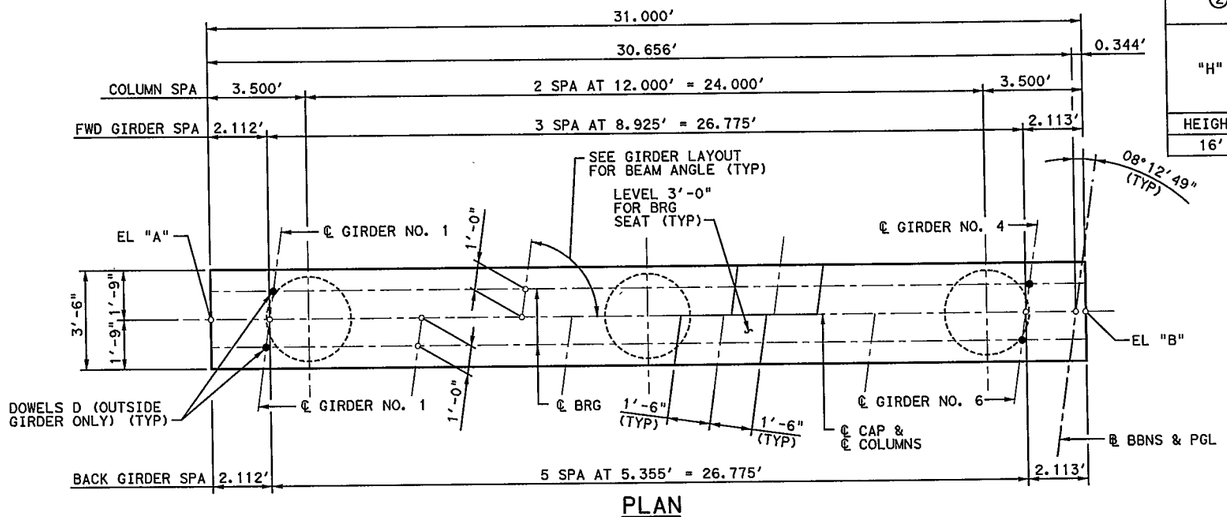

PLAN

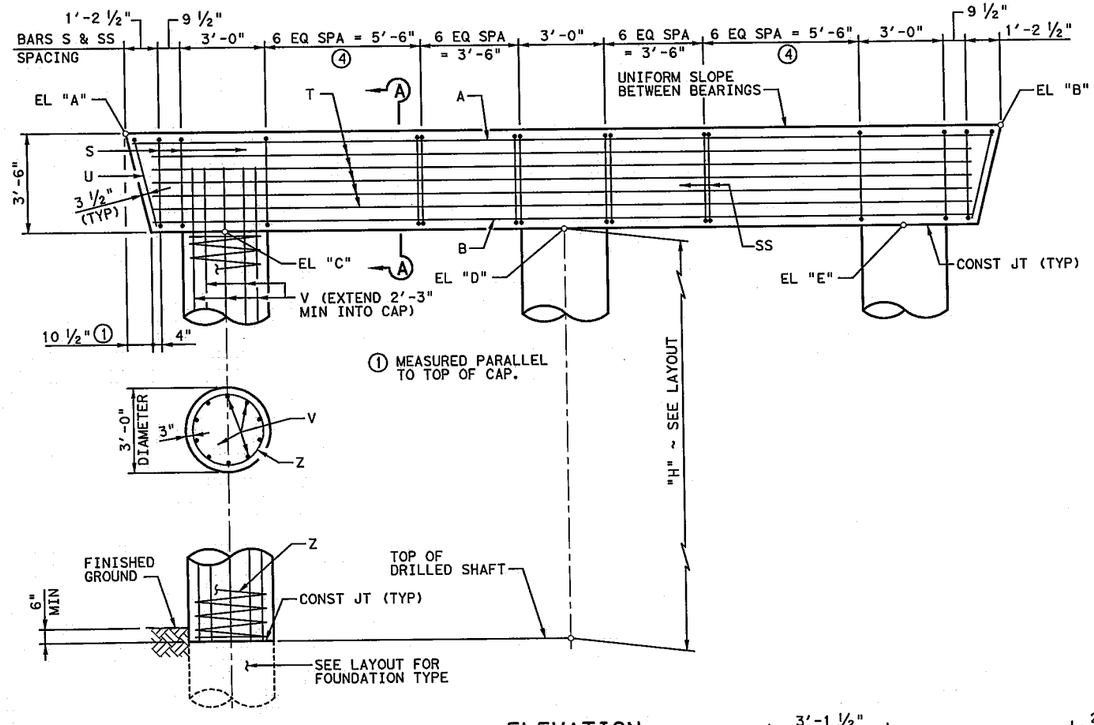

ELEVATION

② TABLE OF COLUMN QUANTITIES

"H"	CL C CONC (HPC) (COLUMN)	BARS V 30 - # 9		BARS Z 3 - #3 SPIRAL	
HEIGHT	CY	LENGTH	WEIGHT	LENGTH	WEIGHT
16'	12.6	18'- 3"	1,862	268'	302

③ TOTAL ESTIMATED QUANTITIES

REINF STEEL	CL C CONC (HPC) (BENT)
LB	CY
5,333	26.5

TABLE OF ELEVATIONS

"A"	"B"	"C"	"D"	"E"
666.782	667.367	663.348	663.575	663.801
TOP OF DS ④		DS 1	DS 2	DS 3
		647.348	647.575	647.801
SHAFT TIP		625.348	625.575	625.801
AS-BUILT SHAFT TIP				

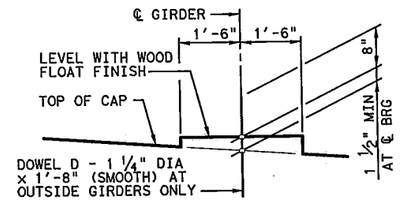

BEARING SEAT DETAIL

(BEARING SURFACE SHALL BE CLEAN AND FREE OF ALL LOOSE MATERIAL BEFORE PLACING BEARING PAD.)

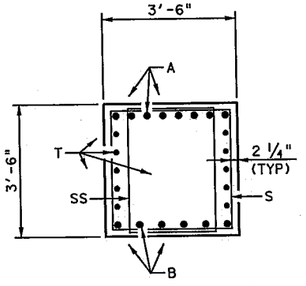

SECTION A-A

④ BARS S ONLY IN THIS SECTION.

TABLE OF CONSTANT QUANTITIES

BAR	NO.	SIZE	LENGTH	WEIGHT
A	8	#11	30'- 7"	1,300
B	6	#11	29'- 0"	924
D	4	1 ¼" D	1'- 8"	28
S	30	#5	13'- 6"	422
SS	14	#5	11'-10"	173
T	10	#5	29'- 0"	302
U	2	#5	9'- 7"	20
REINFORCING STEEL			LB	3,169
CL C CONC (HPC) (CAP)			CY	13.9

② ADJUST BARS V LENGTH BY 1 FT AND BARS Z LENGTH BY 15.74 FT FOR EACH LINEAR FOOT OF VARIATION IN "H" VALUE.

③ ADJUST REINFORCING STEEL TOTAL BY 140 LBS AND CLASS "C" CONCRETE TOTAL BY 0.7854 CY FOR EACH LINEAR FOOT OF VARIATION IN "H" VALUE.

④ TOP OF DRILLED SHAFT ELEVATIONS WERE ESTIMATED BASED ON GROUND ELEVATION INFORMATION AVAILABLE AT THE TIME OF DESIGN. CONTRACTOR SHALL CONFIRM THESE ELEVATIONS PRIOR TO DRILLING.

GENERAL NOTES:

1. DESIGNED ACCORDING TO AASHTO LRFD BRIDGE DESIGN SPECIFICATIONS, 5TH EDITION (2010).
2. CLASS "C" (HPC) CONCRETE STRENGTH F'C = 3,600 PSI.
3. ALL REINFORCING STEEL SHALL BE GRADE 60.
4. SEE FD STANDARD FOR ALL FOUNDATION DETAILS AND NOTES.
5. CALCULATED FOUNDATION LOADS: 242 TONS/D.S.

7/5/12

HL 93 LOADING

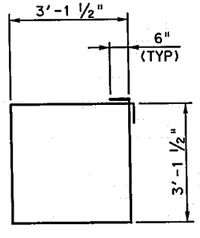

BARS S

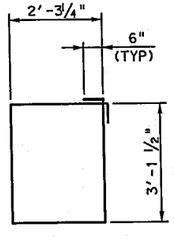

BARS SS

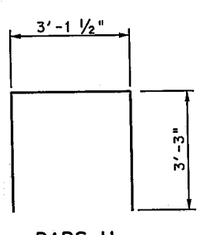

BARS U

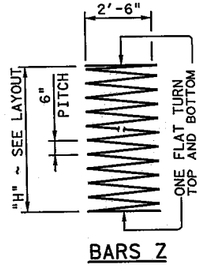

BARS Z

CP&Y, INC.
TBPE REGISTRATION NO. F-1741

Texas Department of Transportation

© 2012

IH 35W FROM NORTH TARRANT PKWY TO IH 820

INTERIOR BENT NO. 4

BASSWOOD BLVD NS TURNAROUND

IH 35W UNDERPASS

SCALE: NTS — SHEET 1 OF 1

DESIGN	FED. RD. DIV. NO.	FEDERAL AID PROJECT NO.		HIGHWAY NO.
LVA	6	(SEE TITLE SHEET)		IH 35W
GRAPHICS PMB	STATE	DISTRICT	COUNTY	SHEET NO.
CHECK LVA	TEXAS	FTW	TARRANT	1533
CHECK TGA	CONTROL	SECTION	JOB	
	0014	16	255, ETC.	

FILENAME: S3BBR*BBNS*1B*03.dgn

DRAWING DATE: 7/13/2012

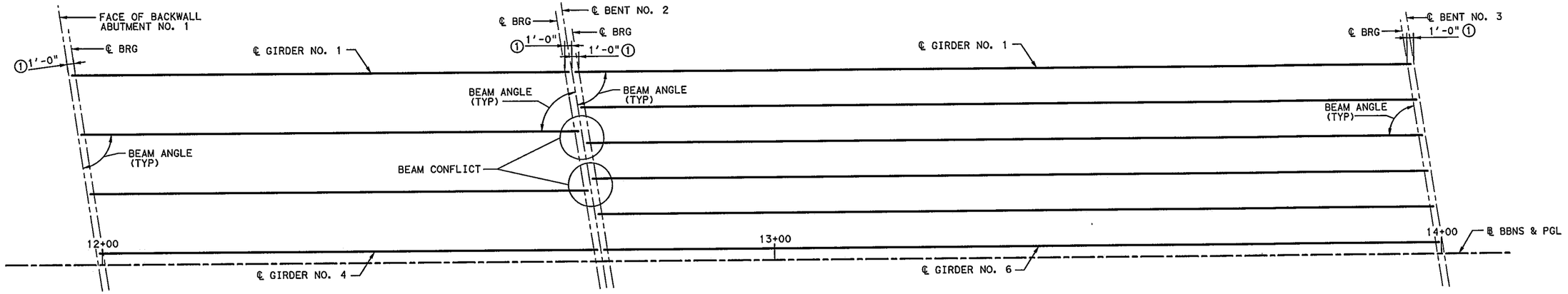

SPAN 1
(TX54 GIRDERS)

SPAN 2
(TX54 GIRDERS)

① SEE IGEB STANDARD FOR ORIENTATION OF DIMENSION.

② GIRDER LENGTHS SHOWN ARE BOTTOM GIRDER FLANGE LENGTHS WITH ADJUSTMENTS MADE FOR BEAM SLOPE.

BENT REPORT

ABUT NO. 1 (N 9 1 26.42 W)
DISTANCE BETWEEN STATION LINE AND BEAM 1 28.543 L

			BEAM SPAC. (C.L. BENT)	BEAM ANGLE D M S
SPAN 1	BEAM	1	0.000	81 47 11
	BEAM	2	8.925	81 47 11
	BEAM	3	8.925	81 47 11
	BEAM	4	8.925	81 47 11
	TOTAL		26.775	

BENT NO. 2 (N 9 1 26.42 W)
DISTANCE BETWEEN STATION LINE AND BEAM 1 28.543 L

			BEAM SPAC. (C.L. BENT)	BEAM ANGLE D M S
SPAN 1	BEAM	1	0.000	81 47 11
	BEAM	2	8.925	81 47 11
	BEAM	3	8.925	81 47 11
	BEAM	4	8.925	81 47 11
	TOTAL		26.775	
SPAN 2	BEAM	1	0.000	81 47 11
	BEAM	2	5.355	81 47 11
	BEAM	3	5.355	81 47 11
	BEAM	4	5.355	81 47 11
	BEAM	5	5.355	81 47 11
	BEAM	6	5.355	81 47 11
	TOTAL		26.775	

BENT NO. 3 (N 9 1 26.42 W)
DISTANCE BETWEEN STATION LINE AND BEAM 1 28.543 L

			BEAM SPAC. (C.L. BENT)	BEAM ANGLE D M S
SPAN 2	BEAM	1	0.000	81 47 11
	BEAM	2	5.355	81 47 11
	BEAM	3	5.355	81 47 11
	BEAM	4	5.355	81 47 11
	BEAM	5	5.355	81 47 11
	BEAM	6	5.355	81 47 11
	TOTAL		26.775	

BEAM REPORT

BEAM REPORT, SPAN 1

	HORIZONTAL DISTANCE C-C BENT	C-C BRG.	TRUE DISTANCE BOT. BM. FLG. ②	BEAM SLOPE
BEAM 1	75.000	72.990	74.51	0.0146
BEAM 2	75.000	72.990	74.51	0.0145
BEAM 3	75.000	72.990	74.51	0.0144
BEAM 4	75.000	72.990	74.51	0.0143

BEAM REPORT, SPAN 2

	HORIZONTAL DISTANCE C-C BENT	C-C BRG.	TRUE DISTANCE BOT. BM. FLG. ②	BEAM SLOPE
BEAM 1	126.000	124.000	125.50	0.0074
BEAM 2	126.000	124.000	125.50	0.0073
BEAM 3	126.000	124.000	125.50	0.0073
BEAM 4	126.000	124.000	125.50	0.0072
BEAM 5	126.000	124.000	125.50	0.0072
BEAM 6	126.000	124.000	125.50	0.0071

STATE OF TEXAS
THOMAS G. ASHCRAFT
81411
REGISTERED
PROFESSIONAL ENGINEER
7/5/12

HL 93 LOADING

CP&Y, INC.
TBPE REGISTRATION NO. F-1741

Texas Department of Transportation
© 2012

IH 35W FROM NORTH TARRANT PKWY TO IH 820

GIRDER LAYOUT (SPANS 1 & 2)

BASSWOOD BLVD NS TURNAROUND
IH 35W UNDERPASS

SCALE: NTS — SHEET 1 OF 1

DESIGN	FED.RD. DIV.NO.	FEDERAL AID PROJECT NO.		HIGHWAY NO.
LVA	6	(SEE TITLE SHEET)		IH 35W
GRAPHICS PMB	STATE	DISTRICT	COUNTY	SHEET NO.
CHECK LVA	TEXAS	FTW	TARRANT	1534
CHECK TGA	CONTROL	SECTION	JOB	
	0014	16	255, ETC.	

DRAWING DATE: 7/13/2012 FILENAME: S38BR_BBNS_GF_01.dgn

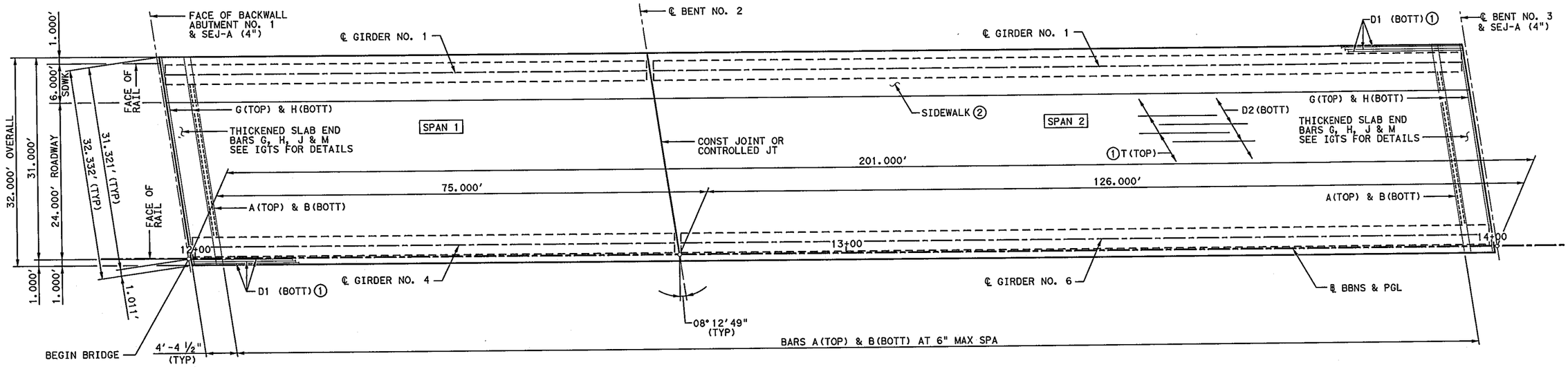

PLAN

HL 93 LOADING

① 2" END COVER ON BARS D1 AND T.

② SEE BRSM STANDARD FOR DETAILS & INFORMATION NOT SHOWN.

STATE OF TEXAS
THOMAS G. ASHCRAFT
81411
REGISTERED PROFESSIONAL ENGINEER

Thomas G. Ashcraft
7/5/12

CP&Y, INC.
TBPE REGISTRATION NO. F-1741

Texas Department of Transportation
© 2012

IH 35W FROM NORTH TARRANT PKWY TO IH 820

201.00' PRESTRESSED CONCRETE I-GIRDER UNIT (SPANS 1 & 2)

BASSWOOD BLVD NS TURNAROUND

IH 35W UNDERPASS

SCALE: NTS

SHEET 1 OF 2

DESIGN	FED.RD. DIV.NO.	FEDERAL AID PROJECT NO.		HIGHWAY NO.
LVA	6	(SEE TITLE SHEET)		IH 35W
GRAPHICS PMB	STATE	DISTRICT	COUNTY	SHEET NO.
CHECK LVA	TEXAS	FTW	TARRANT	1535
CHECK TGA	CONTROL	SECTION	JOB	
	0014	16	255, ETC.	

DRAWING DATE: 7/13/2012 FILENAME: S3BBR_BBNS_PB_01.dgn

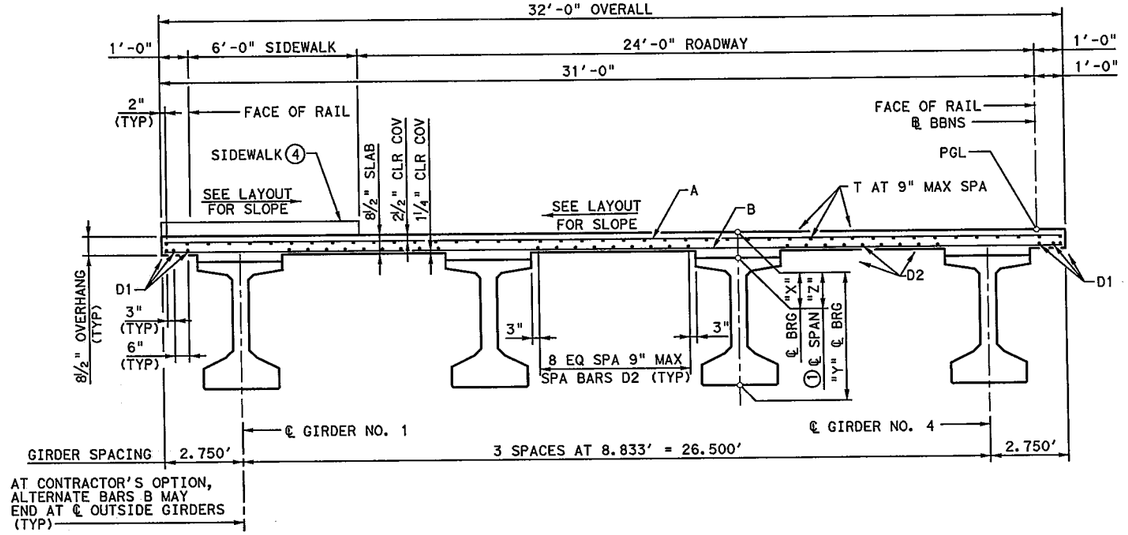

TYPICAL TRANSVERSE SECTION - SPAN 1

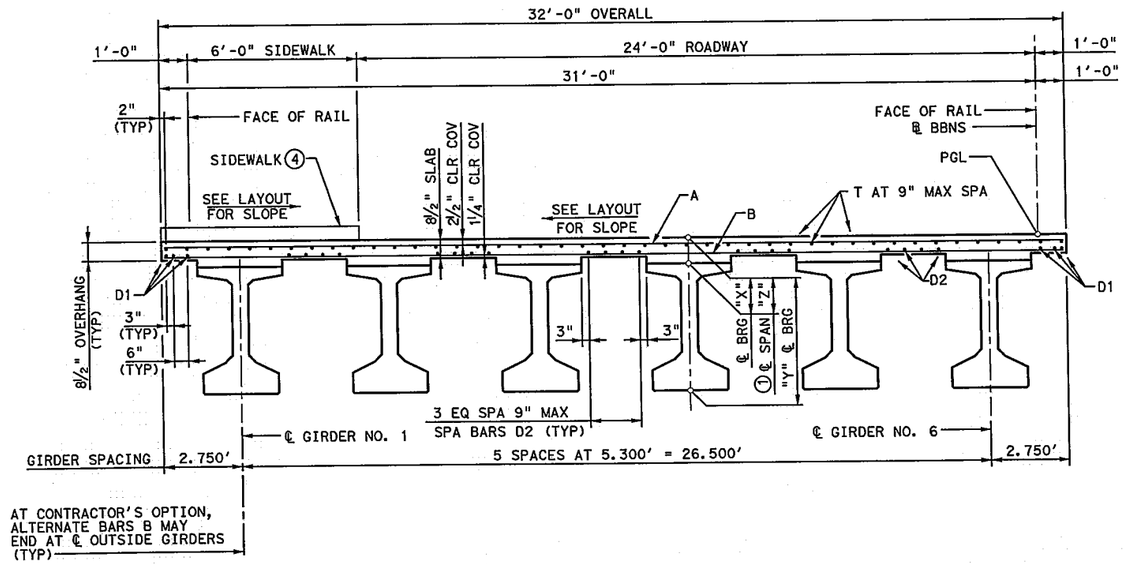

TYPICAL TRANSVERSE SECTION - SPAN 2

TABLE OF SECTION DEPTHS

SPAN NO.	GIRDER NO.	"X" AT ℄ BRG	"Y" AT ℄ BRG	"Z" AT ℄ SPAN (1)
1	ALL	11½"	5'-5½"	10½"
2	ALL	11½"	5'-5½"	10½"

(1) THEORETICAL DIMENSION

BAR TABLE

BAR	SIZE
A	#5
B	#5
D	#5
G	#5
H	#5
J	#5
M	#5
T	#4

TABLE OF ESTIMATED QUANTITIES

SPAN	REINF CONC SLAB	PRSTR CONC I-GIRDERS (TX54) (3)	CLASS "S" CONCRETE	CLASS "S" CONCRETE (SDWLK) (HPC)	REINFORCING STEEL (2)
NO.	SF	LF	CY	CY	LB
1	2,400	298.04	69.8	12.2	16,755
2	4,032	753.00	119.6	20.4	28,148
TOTAL	6,432	1,051.04	189.4	32.6	44,903

SPAN NO.	GIRDER NO.	"A" FT	"B" FT
1	2-3	0.024	0.033
2	2-5	0.117	0.167

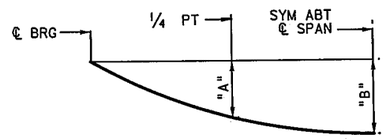

DEAD LOAD DEFLECTION DIAGRAM

CALCULATED DEFLECTIONS SHOWN ARE DUE TO THE CONCRETE SLAB ON INTERIOR GIRDERS ONLY (EC = 5000 KSI). ADJUST VALUES AS REQUIRED FOR EXTERIOR GIRDERS AND IF OPTIONAL SLAB FORMING IS USED. THESE VALUES MAY REQUIRE FIELD VERIFICATION.

(2) REINFORCING STEEL WEIGHT IS CALCULATED USING AN APPROXIMATE FACTOR OF 6.5 LBS PER SQ FT OF REINF CONC SLAB AND 2.2 LBS PER SQ FT OF SIDEWALK.

(3) LENGTHS SHOWN ARE BOTTOM OF GIRDER FLANGE LENGTHS WITH ADJUSTMENTS MADE FOR BEAM SLOPE. SEE GIRDER LAYOUT FOR GIRDER LENGTHS.

(4) SEE BRSM STANDARD FOR DETAILS & INFORMATION NOT SHOWN.

GENERAL NOTES:

1. DESIGNED ACCORDING TO AASHTO LRFD BRIDGE DESIGN SPECIFICATIONS, 5TH EDITION (2010).
2. CLASS "S"(HPC) CONCRETE STRENGTH F'C = 4,000 PSI.
3. ALL REINFORCING SHALL BE GRADE 60 AND EPOXY COATED.
4. SEE PCP OR PMDF STANDARDS FOR DETAILS AND QUANTITY ADJUSTMENTS IF EITHER OF THESE OPTIONS ARE USED.
5. SEE IGTS STANDARD FOR THICKENED SLAB END DETAILS.
6. SEE IGMS STANDARD FOR MISCELLANEOUS SLAB DETAILS.
7. SEE RAIL STANDARD FOR RAIL ANCHORAGE IN SLAB.
8. BAR LAPS, WHERE REQUIRED, TO BE AS FOLLOWS: #4 = 2'-1" #5 = 2'-7"

STATE OF TEXAS
THOMAS G. ASHCRAFT
81411
REGISTERED PROFESSIONAL ENGINEER

Thomas G. Ashcraft
7/5/12

HL 93 LOADING

CP&Y, INC.
TBPE REGISTRATION NO. F-1741

Texas Department of Transportation
© 2012

IH 35W FROM NORTH TARRANT PKWY TO IH 820

201.00' PRESTRESSED CONCRETE I-GIRDER UNIT (SPANS 1 & 2)

BASSWOOD BLVD NS TURNAROUND

IH 35W UNDERPASS

SCALE: NTS — SHEET 2 OF 2

DESIGN	FED.RD. DIV.NO.	FEDERAL AID PROJECT NO.		HIGHWAY NO.
LVA	6	(SEE TITLE SHEET)		IH 35W
GRAPHICS PMB	STATE	DISTRICT	COUNTY	SHEET NO.
CHECK LVA	TEXAS	FTW	TARRANT	1536
CHECK TGA	CONTROL	SECTION	JOB	
	0014	16	255, ETC.	

FILENAME: S3BBR_BBNS_PB_03.dgn

DRAWING DATE: 7/13/2012

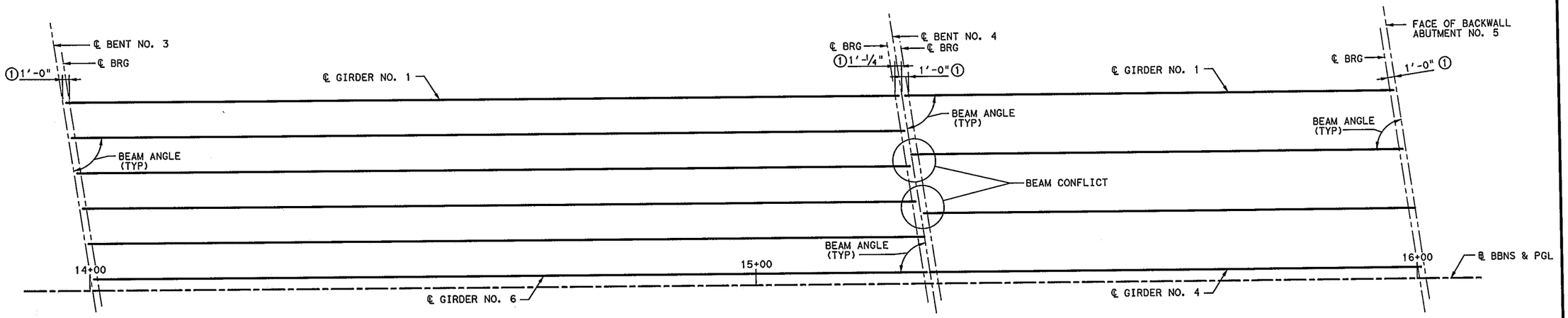

SPAN 3
(TX54 GIRDERS)

SPAN 4
(TX54 GIRDERS)

① SEE IGEB STANDARD FOR ORIENTATION OF DIMENSION.

② GIRDER LENGTHS SHOWN ARE BOTTOM GIRDER FLANGE LENGTHS WITH ADJUSTMENTS MADE FOR BEAM SLOPE.

BENT REPORT

BENT NO. 3 (N 9 1 26.42 W)
DISTANCE BETWEEN STATION LINE AND BEAM 1 1.768 R

		BEAM	BEAM SPAC. (C.L. BENT)	BEAM ANGLE D M S
SPAN	3	BEAM 1	0.000	81 47 11
		BEAM 2	5.355	81 47 11
		BEAM 3	5.355	81 47 11
		BEAM 4	5.355	81 47 11
		BEAM 5	5.355	81 47 11
		BEAM 6	5.355	81 47 11
		TOTAL	26.775	

BENT NO. 4 (N 9 1 26.42 W)
DISTANCE BETWEEN STATION LINE AND BEAM 1 1.768 R

		BEAM	BEAM SPAC. (C.L. BENT)	BEAM ANGLE D M S
SPAN	3	BEAM 1	0.000	81 47 11
		BEAM 2	5.355	81 47 11
		BEAM 3	5.355	81 47 11
		BEAM 4	5.355	81 47 11
		BEAM 5	5.355	81 47 11
		BEAM 6	5.355	81 47 11
		TOTAL	26.775	
SPAN	4	BEAM 1	0.000	81 47 11
		BEAM 2	8.925	81 47 11
		BEAM 3	8.925	81 47 11
		BEAM 4	8.925	81 47 11
		TOTAL	26.775	

ABUT NO. 5 (N 9 1 26.42 W)
DISTANCE BETWEEN STATION LINE AND BEAM 1 1.768 R

		BEAM	BEAM SPAC. (C.L. BENT)	BEAM ANGLE D M S
SPAN	4	BEAM 1	0.000	81 47 11
		BEAM 2	8.925	81 47 11
		BEAM 3	8.925	81 47 11
		BEAM 4	8.925	81 47 11
		TOTAL	26.775	

BEAM REPORT

BEAM REPORT, SPAN 3

	HORIZONTAL DISTANCE C-C BENT	C-C BRG.	TRUE DISTANCE BOT. BM. FLG. ②	BEAM SLOPE
BEAM 1	126.000	124.000	125.50	-0.0017
BEAM 2	126.000	124.000	125.50	-0.0017
BEAM 3	126.000	124.000	125.50	-0.0018
BEAM 4	126.000	124.000	125.50	-0.0018
BEAM 5	126.000	124.000	125.50	-0.0019
BEAM 6	126.000	124.000	125.50	-0.0020

BEAM REPORT, SPAN 4

	HORIZONTAL DISTANCE C-C BENT	C-C BRG.	TRUE DISTANCE BOT. BM. FLG. ②	BEAM SLOPE
BEAM 1	75.000	72.990	74.50	-0.0089
BEAM 2	75.000	72.990	74.50	-0.0090
BEAM 3	75.000	72.990	74.50	-0.0091
BEAM 4	75.000	72.990	74.50	-0.0092

STATE OF TEXAS
THOMAS G. ASHCRAFT
81411
REGISTERED PROFESSIONAL ENGINEER

7/5/12

HL 93 LOADING

CP&Y, INC.
TBPE REGISTRATION NO. F-1741

Texas Department of Transportation
© 2012

IH 35W FROM NORTH TARRANT PKWY TO IH 820

GIRDER LAYOUT (SPANS 3 & 4)

BASSWOOD BLVD NS TURNAROUND
IH 35W UNDERPASS

SCALE: NTS

SHEET 1 OF 1

DESIGN	FED. RD. DIV. NO.	FEDERAL AID PROJECT NO.		HIGHWAY NO.
LVA	6	(SEE TITLE SHEET)		IH 35W
GRAPHICS PMB	STATE	DISTRICT	COUNTY	SHEET NO.
CHECK LVA	TEXAS	FTW	TARRANT	1537
CHECK TGA	CONTROL	SECTION	JOB	
	0014	16	255, ETC.	

DRAWING DATE: 7/13/2012 FILENAME: S3BBR_BBNS_GF_02.dgn

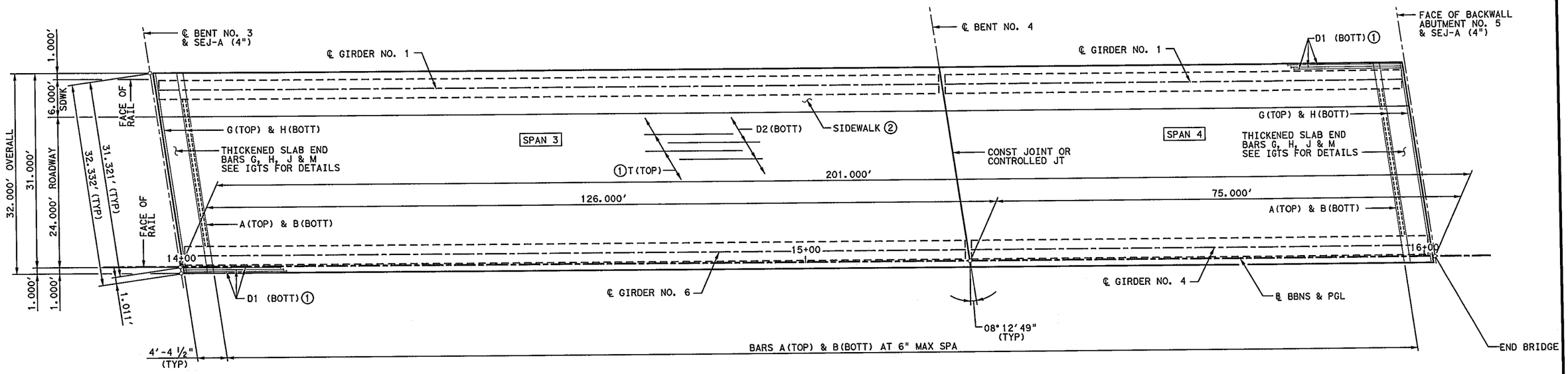

PLAN

① 2" END COVER ON BARS D1 AND T.

② SEE BRSM STANDARD FOR DETAILS & INFORMATION NOT SHOWN.

THOMAS G. ASHCRAFT
81411
REGISTERED PROFESSIONAL ENGINEER
STATE OF TEXAS
7/5/12

HL 93 LOADING

CP&Y, INC.
TBPE REGISTRATION NO. F-1741

Texas Department of Transportation
© 2012

IH 35W FROM NORTH TARRANT PKWY TO IH 820

201.00' PRESTRESSED CONCRETE I-GIRDER UNIT (SPANS 3 & 4)

BASSWOOD BLVD NS TURNAROUND

IH 35W UNDERPASS

SCALE: NTS

SHEET 1 OF 2

DESIGN	FED. RD. DIV. NO.	FEDERAL AID PROJECT NO.		HIGHWAY NO.
LVA	6	(SEE TITLE SHEET)		IH 35W
GRAPHICS	STATE	DISTRICT	COUNTY	SHEET NO.
PMB	TEXAS	FTW	TARRANT	
CHECK	CONTROL	SECTION	JOB	1538
LVA	0014	16	255, ETC.	
CHECK				
TGA				

DRAWING DATE: 7/13/2012 FILENAME: S3BBR_BBNS_PB_02.dgn

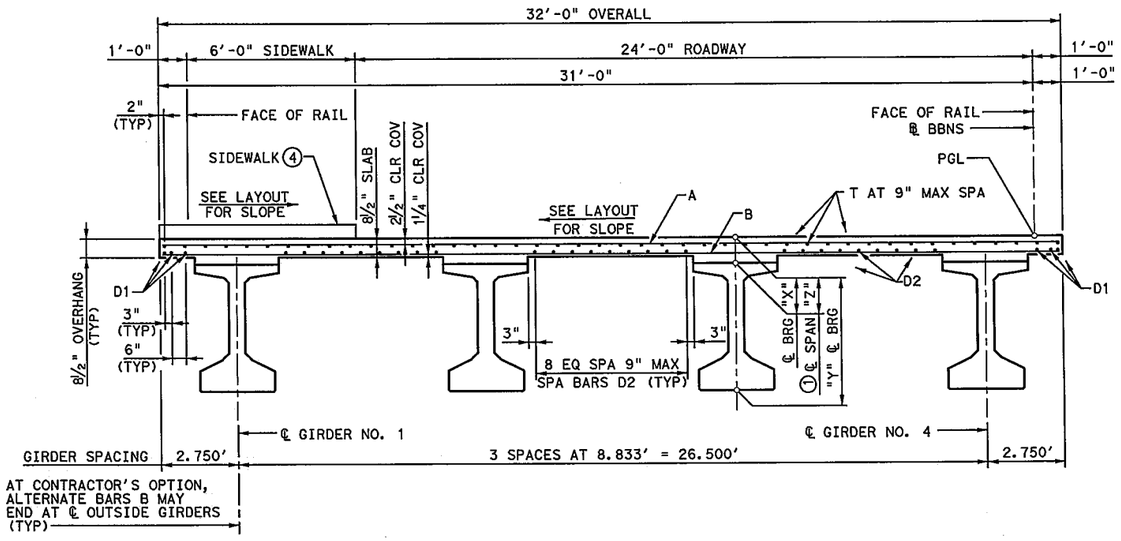

TYPICAL TRANSVERSE SECTION - SPAN 4

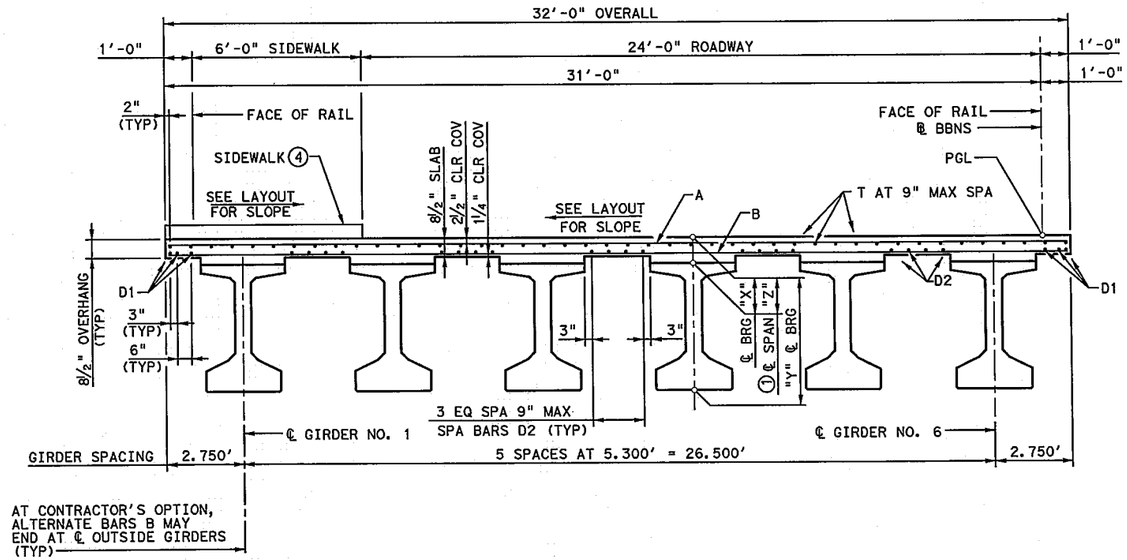

TYPICAL TRANSVERSE SECTION - SPAN 3

TABLE OF SECTION DEPTHS

SPAN NO.	GIRDER NO.	"X" AT ℄ BRG	"Y" AT ℄ BRG	"Z" AT ℄ SPAN (1)
3	ALL	11½"	5'-5½"	10½"
4	ALL	11½"	5'-5½"	10½"

(1) THEORETICAL DIMENSION

BAR TABLE

BAR	SIZE
A	#5
B	#5
D	#5
G	#5
H	#5
J	#5
M	#5
T	#4

TABLE OF ESTIMATED QUANTITIES

SPAN	REINF CONC SLAB	PRSTR CONC I-GIRDERS (TX54) (3)	CLASS "S" CONCRETE	CLASS "S" CONCRETE (SDWLK) (HPC)	REINFORCING STEEL (2)
NO.	SF	LF	CY	CY	LB
3	4,032	753.00	119.6	20.4	28,148
4	2,400	298.00	69.8	12.2	16,755
TOTAL	6,432	1,051.00	189.4	32.6	44,903

SPAN NO.	GIRDER NO.	"A" FT	"B" FT
3	2-5	0.117	0.167
4	2-3	0.024	0.033

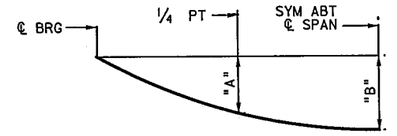

DEAD LOAD DEFLECTION DIAGRAM

CALCULATED DEFLECTIONS SHOWN ARE DUE TO THE CONCRETE SLAB ON INTERIOR GIRDERS ONLY (EC = 5000 KSI). ADJUST VALUES AS REQUIRED FOR EXTERIOR GIRDERS AND IF OPTIONAL SLAB FORMING IS USED. THESE VALUES MAY REQUIRE FIELD VERIFICATION.

(2) REINFORCING STEEL WEIGHT IS CALCULATED USING AN APPROXIMATE FACTOR OF 6.5 LBS PER SQ FT OF REINF CONC SLAB AND 2.2 LBS PER SQ FT OF SIDEWALK.

(3) LENGTHS SHOWN ARE BOTTOM OF GIRDER FLANGE LENGTHS WITH ADJUSTMENTS MADE FOR BEAM SLOPE. SEE GIRDER LAYOUT FOR GIRDER LENGTHS.

(4) SEE BRSM STANDARD FOR DETAILS & INFORMATION NOT SHOWN.

GENERAL NOTES:

1. DESIGNED ACCORDING TO AASHTO LRFD BRIDGE DESIGN SPECIFICATIONS, 5TH EDITION (2010).
2. CLASS "S"(HPC) CONCRETE STRENGTH F'C = 4,000 PSI.
3. ALL REINFORCING SHALL BE GRADE 60 AND EPOXY COATED.
4. SEE PCP OR PMDF STANDARDS FOR DETAILS AND QUANTITY ADJUSTMENTS IF EITHER OF THESE OPTIONS ARE USED.
5. SEE IGTS STANDARD FOR THICKENED SLAB END DETAILS.
6. SEE IGMS STANDARD FOR MISCELLANEOUS SLAB DETAILS.
7. SEE RAIL STANDARD FOR RAIL ANCHORAGE IN SLAB.
8. BAR LAPS, WHERE REQUIRED, TO BE AS FOLLOWS: #4 = 2'-1" #5 = 2'-7"

STATE OF TEXAS
THOMAS G. ASHCRAFT
81411
REGISTERED PROFESSIONAL ENGINEER

Thomas G. Ashcraft
7/5/12

HL 93 LOADING

CP&Y, INC.
TBPE REGISTRATION NO. F-1741

Texas Department of Transportation
© 2012

IH 35W FROM NORTH TARRANT PKWY TO IH 820

201.00' PRESTRESSED CONCRETE I-GIRDER UNIT (SPANS 3 & 4)

BASSWOOD BLVD NS TURNAROUND

IH 35W UNDERPASS

SCALE: NTS — SHEET 2 OF 2

DESIGN	FED. RD. DIV. NO.	FEDERAL AID PROJECT NO.		HIGHWAY NO.
LVA	6	(SEE TITLE SHEET)		IH 35W
GRAPHICS PMB	STATE	DISTRICT	COUNTY	SHEET NO.
CHECK LVA	TEXAS	FTW	TARRANT	1539
CHECK TGA	CONTROL 0014	SECTION 16	JOB 255, ETC.	

DRAWING DATE: 7/13/2012 FILENAME: S3BBR_BBNS_PB_04.dgn

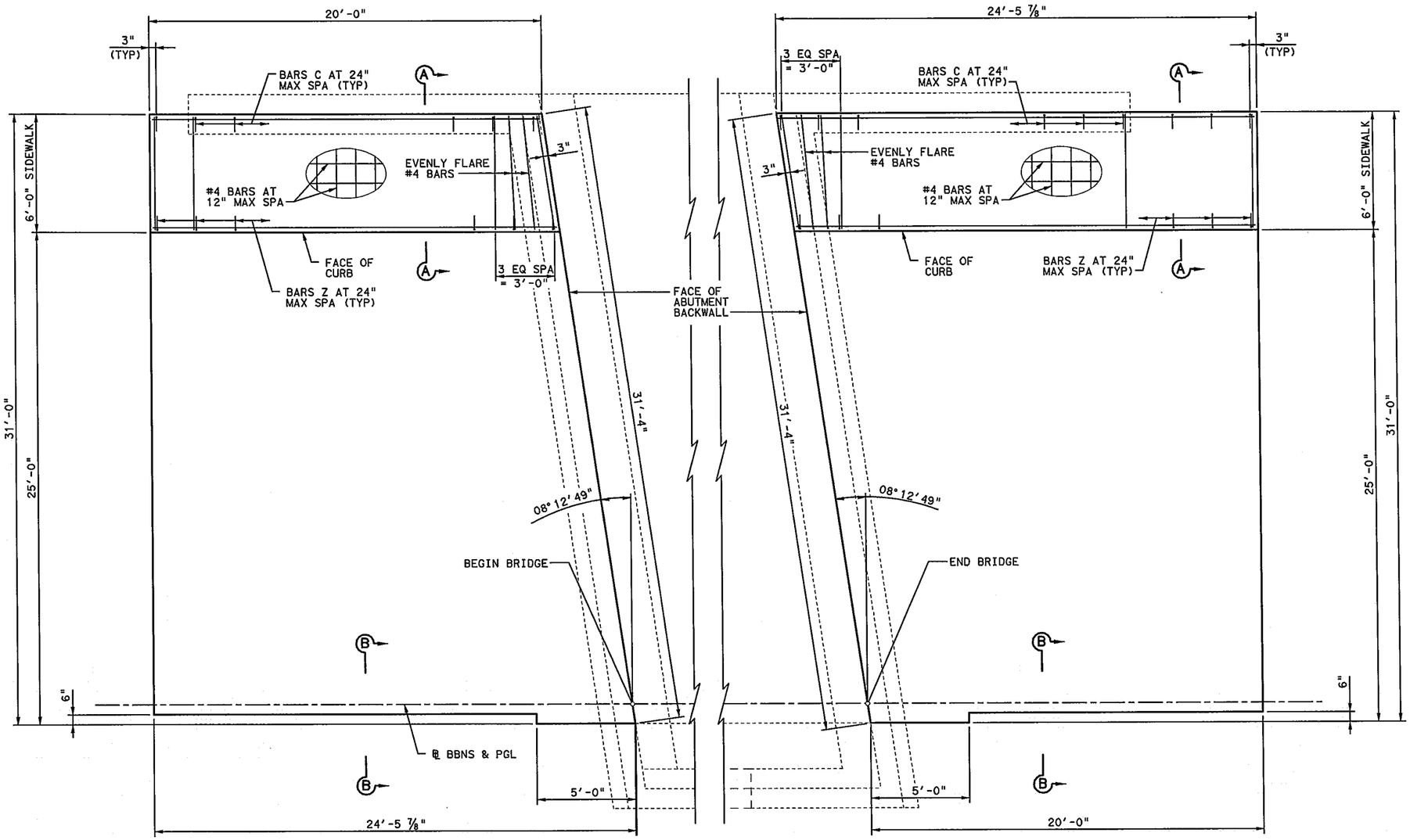

APPROACH SLAB PLAN
(ABUT NO. 1)

APPROACH SLAB PLAN
(ABUT NO. 5)

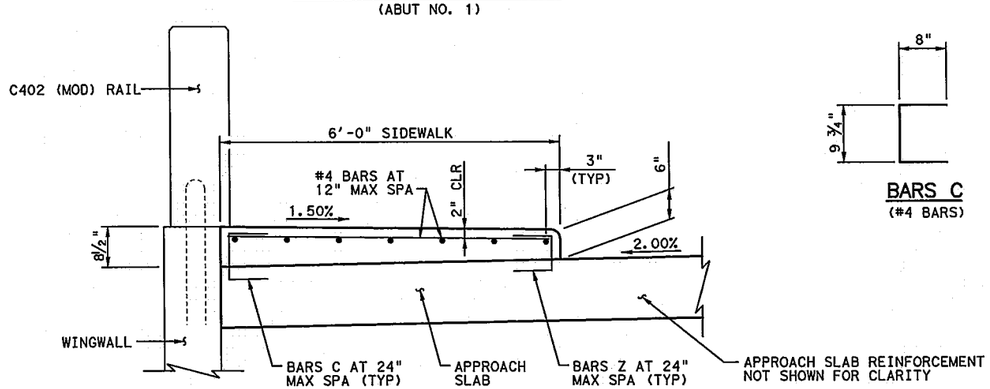

SECTION A-A

BARS C
(#4 BARS)

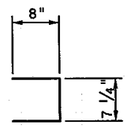

BARS Z
(#4 BARS)

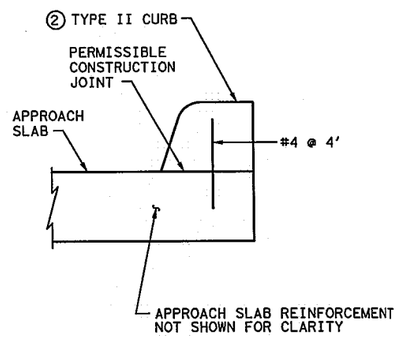

SECTION B-B

SUMMARY OF ESTIMATED QUANTITIES

ABUT NO.	CLASS "S" CONCRETE (APPR SLAB)	CLASS "S" CONCRETE (SDWLK) (HPC)	REINF STEEL①
	CY	CY	LB
1	32	2.7	6,532
2	32	3.2	6,587
TOTAL	64	5.9	13,120

① REINF. STEEL WEIGHT CALCULATED BASED ON 8.5 LB/SF FOR APPROACH SLAB, 1.6 LB/SF FOR SIDEWALK AND 18.4 LB/LF FOR SUPPORT SLAB.

② SEE CONCRETE CURB AND CURB AND GUTTER STANDARD, CC-CG (FW), FOR INFORMATION NOT SHOWN.

GENERAL NOTES:

1. DESIGNED ACCORDING TO AASHTO LRFD BRIDGE DESIGN SPECIFICATIONS, 5TH EDITION (2010).
2. CLASS "S" (HPC) CONCRETE STRENGTH F'C = 4,000 PSI.
3. ALL REINFORCING SHALL BE GRADE 60 AND EPOXY COATED.
4. SEE BAS-C STANDARD FOR INFORMATION NOT SHOWN.
5. BAR LAPS, WHERE REQUIRED, TO BE AS FOLLOWS:
   #4 = 2'-1"
   #5 = 2'-7"

STATE OF TEXAS
THOMAS G. ASHCRAFT
81411
REGISTERED
PROFESSIONAL ENGINEER

7/5/12

HL 93 LOADING

CP&Y, INC.
TBPE REGISTRATION NO. F-1741

Texas Department of Transportation
© 2012

IH 35W FROM NORTH TARRANT PKWY TO IH 820

APPROACH SLAB DETAILS

BASSWOOD BLVD NS TURNAROUND
IH 35W UNDERPASS

SCALE: VARIES — SHEET 1 OF 1

DESIGN	FED. RD. DIV. NO.	FEDERAL AID PROJECT NO.		HIGHWAY NO.
LVA	6	(SEE TITLE SHEET)		IH 35W
GRAPHICS	STATE	DISTRICT	COUNTY	SHEET NO.
GWS	TEXAS	FTW	TARRANT	
CHECK LVA	CONTROL	SECTION	JOB	1540
CHECK TGA	0014	16	255, ETC.	

FILENAME: S3BBR*BBNS*AS*01.dgn
DRAWING DATE: 7/13/2012

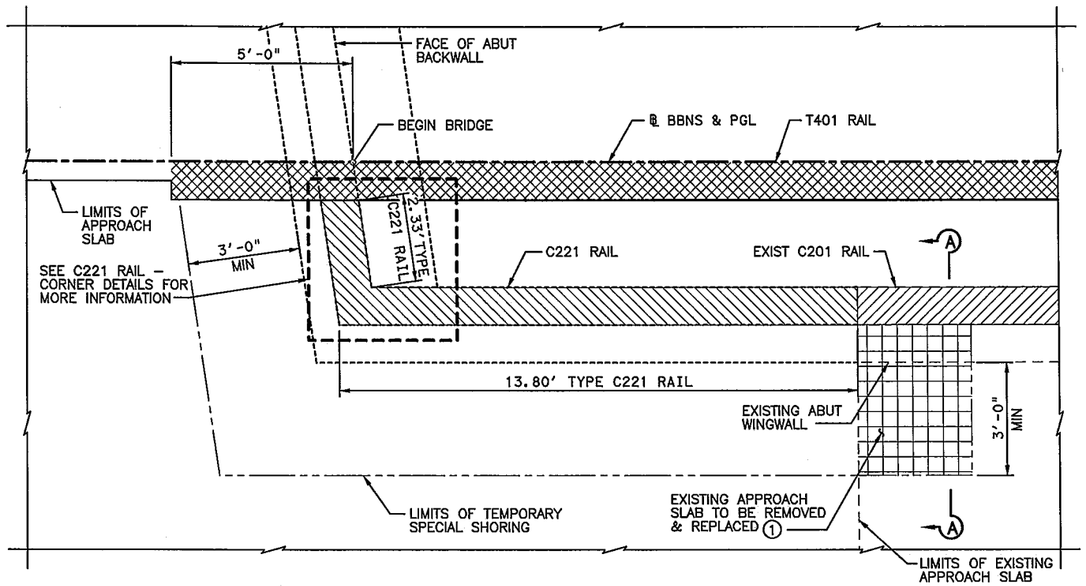

BEGIN BRIDGE PLAN
(ABUT NO. 1)

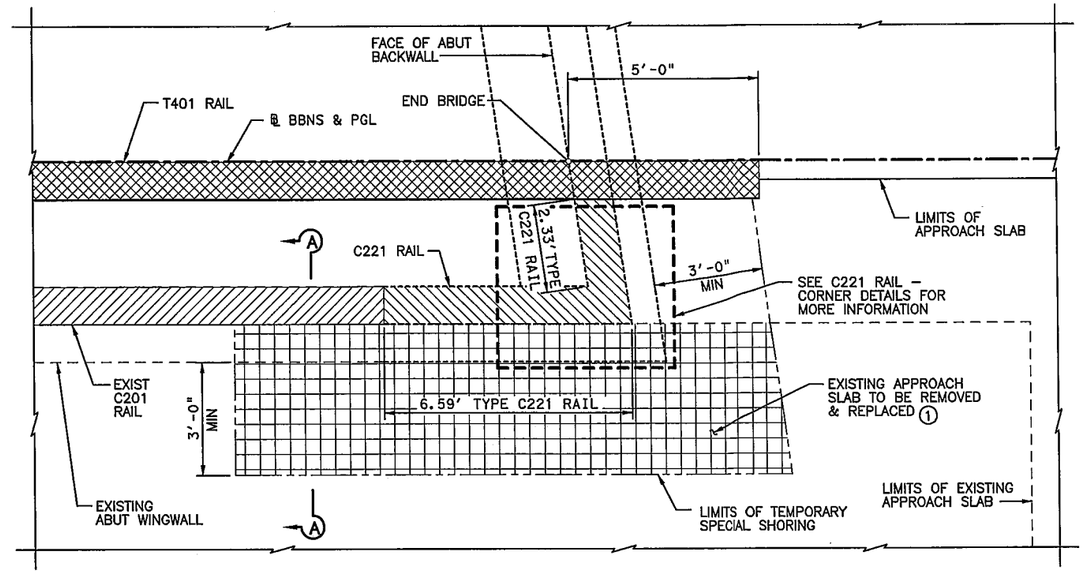

END BRIDGE PLAN
(ABUT NO. 5)

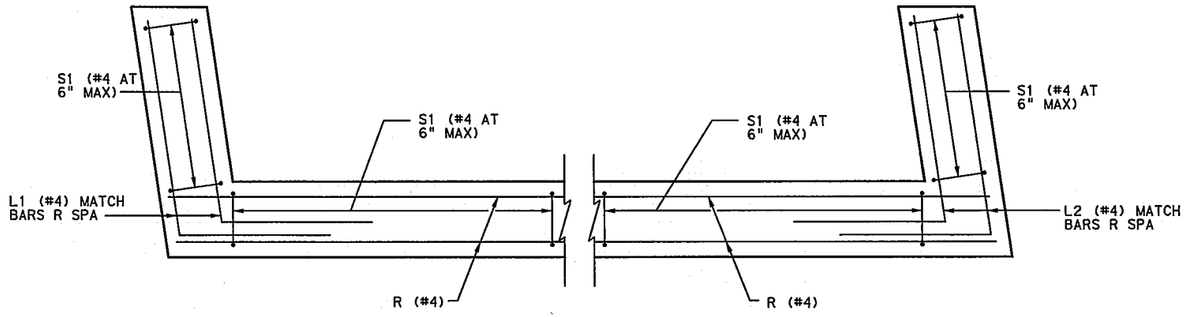

C221 RAIL - CORNER DETAILS

SEE C221 STANDARD FOR INFORMATION NOT SHOWN.

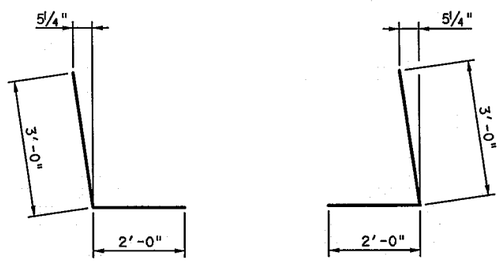

LEGEND

- C221 RAIL
- EXIST C201 RAIL
- T401 RAIL
- EXISTING APPROACH SLAB TO BE REMOVED & REPLACED

1. EXPOSED REINFORCING TO BE CUT FLUSH WITH CONCRETE SURFACE.
2. SEE BAS-C STANDARD FOR MORE INFORMATION.
3. DRILL AND GROUT 1'-6" MINIMUM INTO EXISTING APPROACH SLAB. GROUT TO BE NON-SHRINK GROUT.

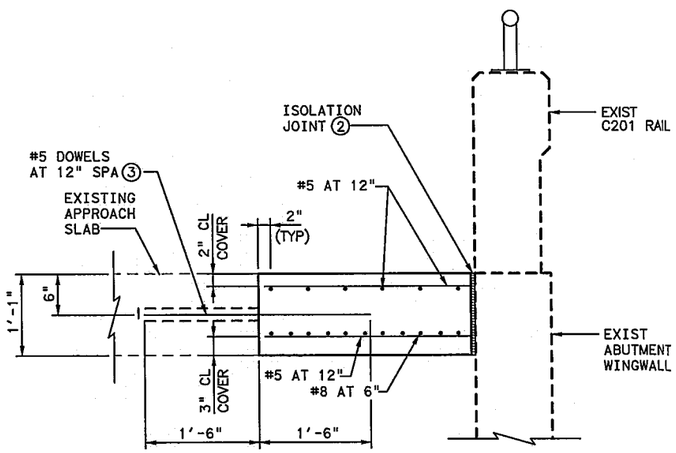

SCTION A-A

STATE OF TEXAS
THOMAS G. ASHCRAFT
81411
REGISTERED PROFESSIONAL ENGINEER
7/5/12

HL 93 LOADING

CP&Y, INC.
TBPE REGISTRATION NO. F-1741

Texas Department of Transportation
© 2012

IH 35W FROM NORTH TARRANT PKWY TO IH 820

BRIDGE END DETAILS

BASSWOOD BLVD NS TURNAROUND
IH 35W UNDERPASS

SCALE: VARIES — SHEET 1 OF 1

DESIGN	FED.RD. DIV.NO.	FEDERAL AID PROJECT NO.		HIGHWAY NO.
LVA	6	(SEE TITLE SHEET)		IH 35W
GRAPHICS PMB	STATE	DISTRICT	COUNTY	SHEET NO.
CHECK LVA	TEXAS	FTW	TARRANT	1541
CHECK TGA	CONTROL	SECTION	JOB	
	0014	16	255, ETC.	

FILENAME: S3BBR_BBNS_AS_02.dgn
DRAWING DATE: 7/13/2012

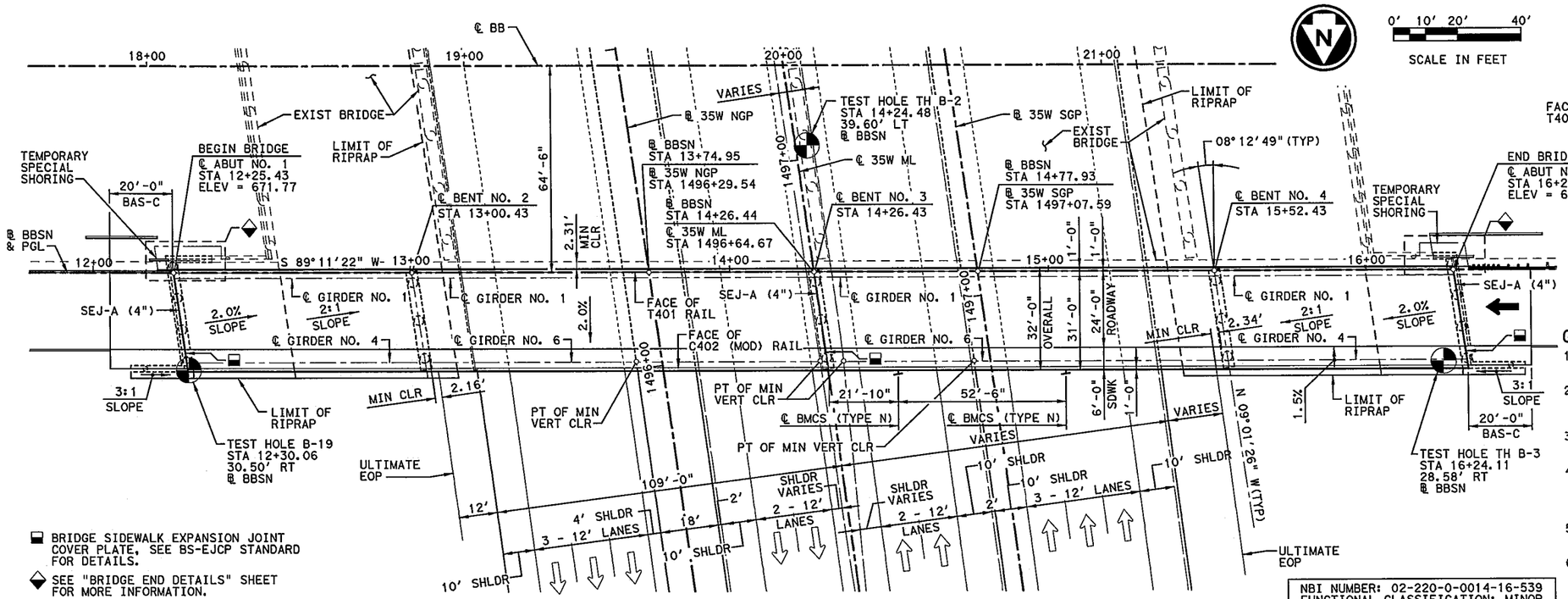

PLAN

0' 10' 20' 40'

SCALE IN FEET

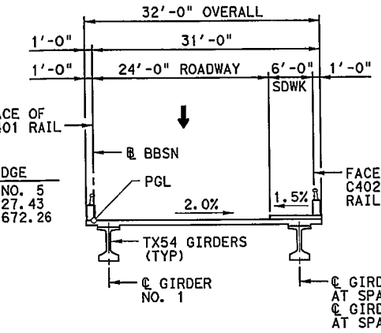

TYPICAL SECTION

NBI NUMBER: 02-220-0-0014-16-539
FUNCTIONAL CLASSIFICATION: MINOR COLLECTOR URBAN FRONTAGE ROAD
DESIGN SPEED: 40 MPH
ADT: 1,750 (2030)

GENERAL NOTES:

1. DESIGNED ACCORDING TO AASHTO LRFD BRIDGE DESIGN SPECIFICATIONS, 5TH EDITION (2010).
2. ALL DIMENSIONS ARE EITHER HORIZONTAL OR VERTICAL AND MUST BE CORRECTED FOR GRADE, CROWN, AND/OR SUPERELEVATION.
3. "D" DENOTES BENTS WITH DOWEL BARS "D" AND SLOTTED HOLES AT ENDS OF EXTERIOR GIRDERS ONLY.
4. SEE "BORING LOGS - BRIDGE" SHEETS FOR GEOTECHNICAL INFORMATION. FOR DRILLING LOG INFORMATION RELATED TO TH B-2 & TH B-3, REFERENCE DESIGN PLANS CSJ 0041-16-211 DATED FEB 1995.
5. CONTRACTOR TO VERIFY LOCATION OF ALL UTILITIES PRIOR TO EXCAVATION.
6. THE "H" VALUES SHOWN ARE ESTIMATED COLUMN HEIGHTS. CONTRACTOR IS RESPONSIBLE FOR CALCULATING ACTUAL COLUMN HEIGHTS BASED ON FIELD CONDITIONS.
7. ALLOWANCE FOR FUTURE RESURFACING: 23.3 PSF.

HL 93 LOADING

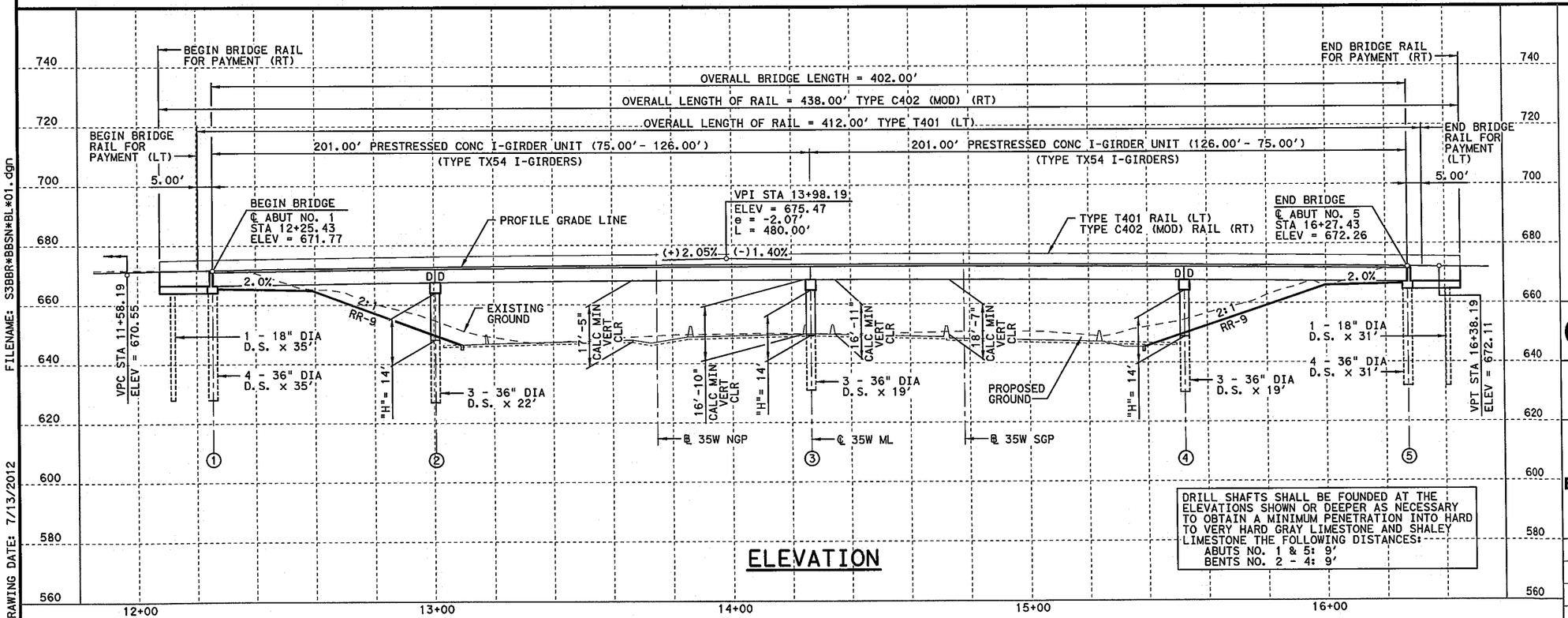

ELEVATION

DRILL SHAFTS SHALL BE FOUNDED AT THE ELEVATIONS SHOWN OR DEEPER AS NECESSARY TO OBTAIN A MINIMUM PENETRATION INTO HARD TO VERY HARD GRAY LIMESTONE AND SHALEY LIMESTONE THE FOLLOWING DISTANCES:
ABUTS NO. 1 & 5: 9'
BENTS NO. 2 - 4: 9'

STATE OF TEXAS
THOMAS G. ASHCRAFT
81411
REGISTERED PROFESSIONAL ENGINEER

7/5/12

CP&Y, INC.
TBPE REGISTRATION NO. F-1741

Texas Department of Transportation
© 2012

IH 35W FROM NORTH TARRANT PKWY TO IH 820

BRIDGE LAYOUT

BASSWOOD BLVD SN TURNAROUND

IH 35W UNDERPASS

SCALE: 1" = 40' H & V

SHEET 1 OF 1

DESIGN	FED.RD. DIV.NO.	FEDERAL AID PROJECT NO.		HIGHWAY NO.
LVA	6	(SEE TITLE SHEET)		IH 35W
GRAPHICS GWS	STATE	DISTRICT	COUNTY	SHEET NO.
CHECK TGA	TEXAS	FTW	TARRANT	
CHECK LVA	CONTROL	SECTION	JOB	1542
	0014	16	255, ETC.	

FILENAME: S3BBR*BBSN*BL*01.dgn

DRAWING DATE: 7/13/2012

SUMMARY OF ESTIMATED QUANTITIES

BID ITEM	403 2001	416 2001	416 2004	420 2041	420 2042	420 2256	420 2292	422 2003	425 2068	428 2002	432 2001	442 2048
BID ITEM DESCRIPTION	TEMPORARY SPL SHORING	DRILL SHAFT (18 IN)	DRILL SHAFT (36 IN)	CL C CONC (HPC) (ABUT)	CL C CONC (HPC) (BENT)	CL S CONC (HPC) (APPR SLAB)	CL S CONC (HPC) (BRDG SDWLK)	REINF CONC SLAB (HPC) (CL S)	PRESTR CONC GIRDER (TX54)	CONC SURF TREATMENT (CLASS II)	RIPRAP (CONC) (4 IN)	STRUCTURAL STEEL (MISC NON-BRIDGE)
BRIDGE ELEMENT	SF	LF	LF	CY	CY	CY	CY	SF	LF	SY	CY	LB
2 - ABUTMENTS	483	66	264	58.0		64	5.9			244	159	
3 - INTERIOR BENTS			180		74.8					38		
2 - 201.000' PRESTRESSED CONCRETE I-GIRDER UNITS							65.2	12,864	2,102.00	1,519		651
TOTALS	483	66	444	58.0	74.8	64	71.1	12,864	2,102.00	1,801	159	651

SUMMARY OF ESTIMATED QUANTITIES

BID ITEM	450	450	450 2612	454 2001	636 2001
BID ITEM DESCRIPTION	RAIL (TY T401) (HPC)	RAIL (TY C402) (MOD) (HPC)	RAIL (TY C221) (HPC)	SEALED EXPANSION JOINT (4 IN) (SEJ-A)	ALUMINUM SIGNS (TY A)
BRIDGE ELEMENT	LF	LF	LF	LF	SF
2 - ABUTMENTS	10.0	36.0	25.1	52	
3 - INTERIOR BENTS				26	
2 - 201.000' PRESTRESSED CONCRETE I-GIRDER UNITS	402.0	402.0			28
TOTALS	412.0	438.0	25.1	78	28

BEARING SEAT ELEVATIONS

		BEAM 1	BEAM 2	BEAM 3	BEAM 4	BEAM 5	BEAM 6
BENT 1	(FWD)	666.066	665.910	665.752	665.595		
BENT 2	(BK)	667.011	666.848	666.684	666.520		
	(FWD)	667.032	666.933	666.835	666.737	666.638	666.540
BENT 3	(BK)	667.742	667.637	667.532	667.427	667.322	667.216
	(FWD)	667.744	667.639	667.534	667.429	667.324	667.218
BENT 4	(BK)	667.333	667.221	667.109	666.997	666.885	666.773
	(FWD)	667.317	667.130	666.944	666.756		
BENT 5	(BK)	666.548	666.355	666.161	665.968		

STATE OF TEXAS
THOMAS G. ASHCRAFT
81411
REGISTERED
PROFESSIONAL ENGINEER

Thomas G. Ashcraft
8/29/12

HL 93 LOADING

CP&Y, INC.
TBPE REGISTRATION NO. F-1741

Texas Department of Transportation
© 2012

IH 35W FROM NORTH TARRANT PKWY TO IH 820

ESTIMATED QUANTITIES AND BEARING SEAT ELEV.

BASSWOOD BLVD SN TURNAROUND
IH 35W UNDERPASS

SCALE: NTS

SHEET 1 OF 1

DESIGN	FED.RD. DIV.NO.	FEDERAL AID PROJECT NO.		HIGHWAY NO.
LVA	6	(SEE TITLE SHEET)		IH 35W
GRAPHICS GWS	STATE	DISTRICT	COUNTY	SHEET NO.
CHECK LVA	TEXAS	FTW	TARRANT	1543
CHECK TGA	CONTROL	SECTION	JOB	
	0014	16	255, ETC.	

DRAWING DATE: 7/13/2012 FILENAME: S3BBR_BBSN_EQ_01.dgn

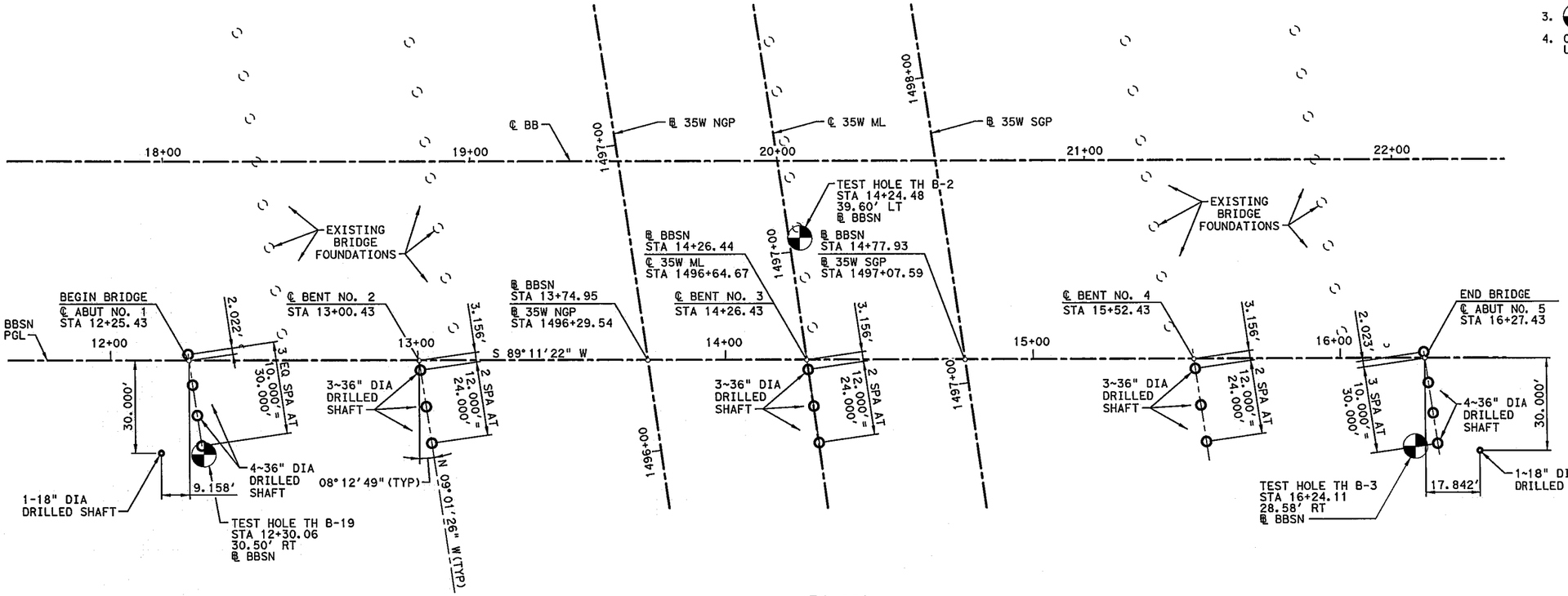

PLAN

0' 10' 20' 40'

SCALE IN FEET

GENERAL NOTES:

1. FOR ANY TEMPORARY SHORING REQUIRED AT INTERIOR BENT LOCATIONS, FOLLOW TxDOT STANDARD SPECIFICATION ITEM 403.
2. SEE "BORING LOG - BRIDGE" SHEETS FOR GEOTECHNICAL INFORMATION. FOR DRILLING LOG INFORMATION RELATED TO TH B-2 & TH B-3 REFERENCE DESIGN PLANS FOR CSJ 0014-16-211 DATED FEB 1995.
3. ⌖ DENOTES TEST HOLE LOCATION.
4. CONTRACTOR TO VERIFY LOCATION OF ALL UTILITIES PRIOR TO EXCAVATION.

STATE OF TEXAS
THOMAS G. ASHCRAFT
81411
REGISTERED PROFESSIONAL ENGINEER

7/5/12

HL 93 LOADING

CP&Y, INC.
TBPE REGISTRATION NO. F-1741

Texas Department of Transportation
© 2012

IH 35W FROM NORTH TARRANT PKWY TO IH 820

FOUNDATION LAYOUT

BASSWOOD BLVD SN TURNAROUND

IH 35W UNDERPASS

SCALE: 1" = 40' SHEET 1 OF 1

DESIGN	FED. RD. DIV. NO.	FEDERAL AID PROJECT NO.		HIGHWAY NO.
LVA	6	(SEE TITLE SHEET)		IH 35W
GRAPHICS	STATE	DISTRICT	COUNTY	SHEET NO.
PMB	TEXAS	FTW	TARRANT	
CHECK	CONTROL	SECTION	JOB	1544
LVA	0014	16	255, ETC.	
CHECK				
TGA				

DRAWING DATE: 7/13/2012 FILENAME: S3BBR_BBSN_FL_01.dgn

TABLE OF ELEVATIONS				
CAP	"A"	"B"	"C"	"D"
	665.421	666.031	671.927	671.829
WINGWALLS	"F"	"G"	"H"	"I"
	665.116	666.230	671.637	672.042
DRILLED SHAFT	DS1	DS2	DS3	DS4
	663.508	663.332	663.156	662.980
SHAFT TIP	628.508	628.332	628.156	627.980
AS-BUILT SHAFT TIP				

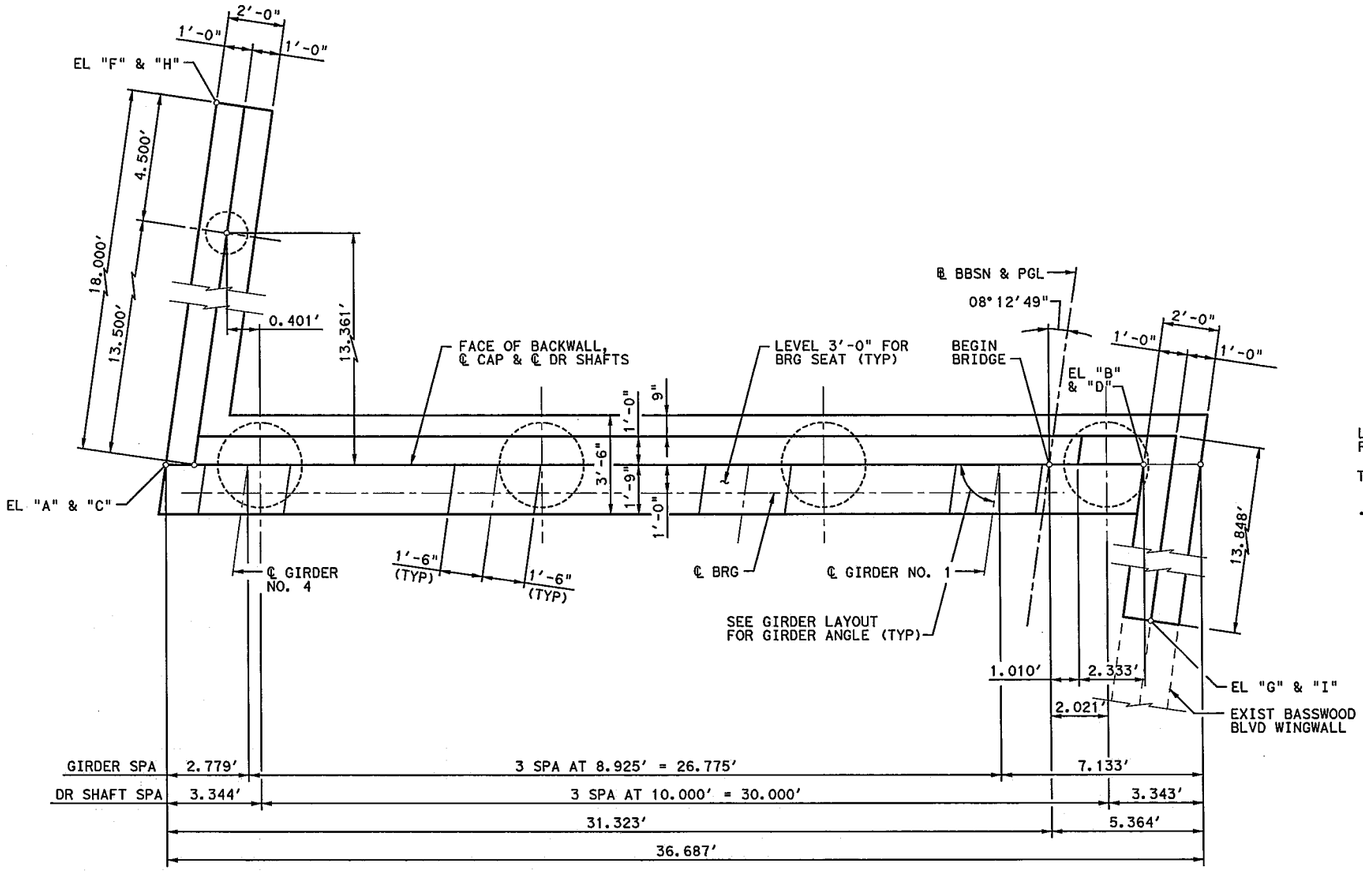

PLAN

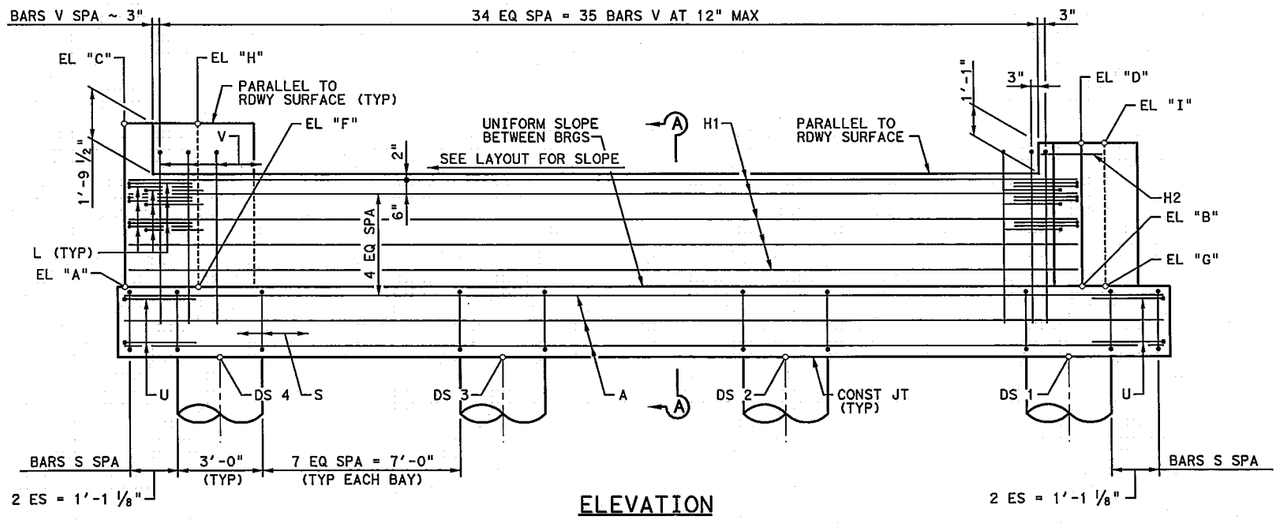

ELEVATION

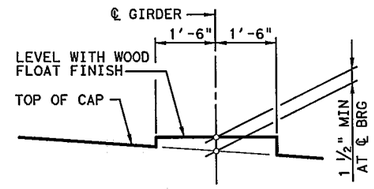

BEARING SEAT DETAIL

(BEARING SURFACE SHALL BE CLEAN AND FREE OF ALL LOOSE MATERIAL BEFORE PLACING BEARING PAD.)

GENERAL NOTES:

1. DESIGNED ACCORDING TO AASHTO LRFD BRIDGE DESIGN SPECIFICATIONS, 5TH EDITION (2010).
2. CLASS "C" (HPC) CONCRETE STRENGTH F'C = 3,600 PSI.
3. ALL CAP AND WALL REINFORCING SHALL BE GRADE 60.
4. CONTRACTOR TO VERIFY ALL DIMENSIONS IN THE FIELD PRIOR TO ORDERING MATERIALS OR COMMENCING CONSTRUCTION.
5. SEE FD STANDARD FOR ALL FOUNDATION DETAILS AND NOTES.
6. SEE RAIL STANDARD FOR RAIL ANCHORAGE IN WINGWALLS.
7. CALCULATED FOUNDATION LOADS:
   CAP DRILLED SHAFTS = 79 TONS/D.S.
   WINGWALL DRILLED SHAFTS = 10 TONS/D.S.

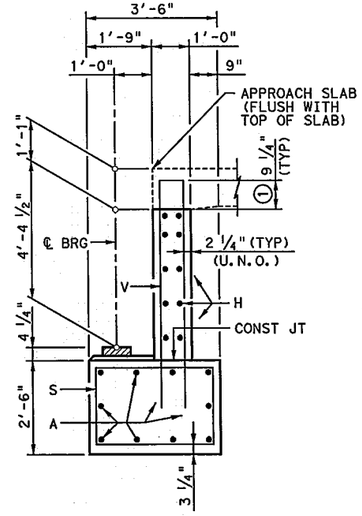

SECTION A-A

1 INCREASE AS REQUIRED TO MAINTAIN 3 3/4" FROM FINISHED GRADE.

STATE OF TEXAS
THOMAS G. ASHCRAFT
81411
REGISTERED
PROFESSIONAL ENGINEER

Thomas G. Ashcraft
7/5/12

HL 93 LOADING

CP&Y, INC.
TBPE REGISTRATION NO. F-1741

Texas Department of Transportation
© 2012

IH 35W FROM NORTH TARRANT PKWY TO IH 820

ABUTMENT NO. 1

BASSWOOD BLVD SN TURNAROUND
IH 35W UNDERPASS

SCALE: NTS SHEET 1 OF 2

DESIGN	FED. RD. DIV. NO.	FEDERAL AID PROJECT NO.		HIGHWAY NO.
LVA	6	(SEE TITLE SHEET)		IH 35W
GRAPHICS GWS	STATE	DISTRICT	COUNTY	SHEET NO.
CHECK LVA	TEXAS	FTW	TARRANT	1545
CHECK TGA	CONTROL	SECTION	JOB	
	0014	16	255, ETC.	

DRAWING DATE: 7/13/2012 FILENAME: S3BBR*BBSN*AB*01.dgn

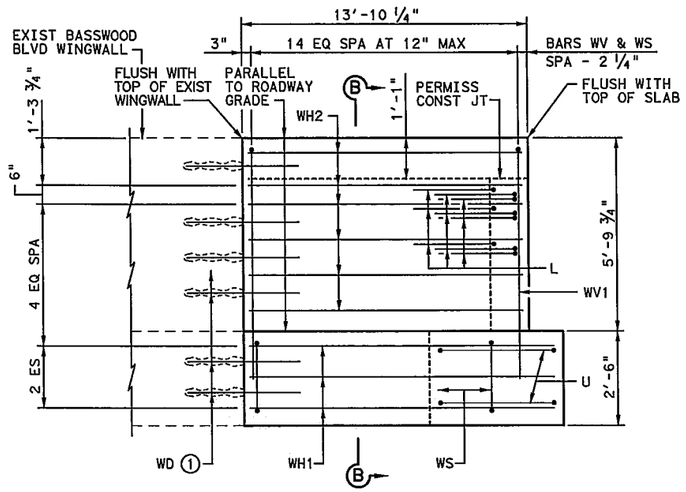

WINGWALL ELEVATION RIGHT

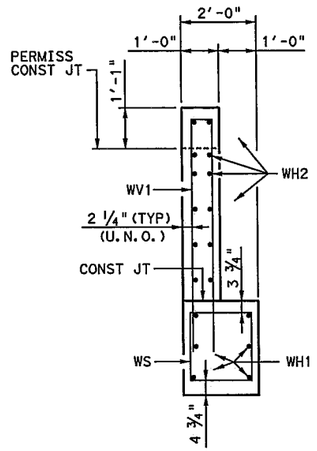

SECTION B-B

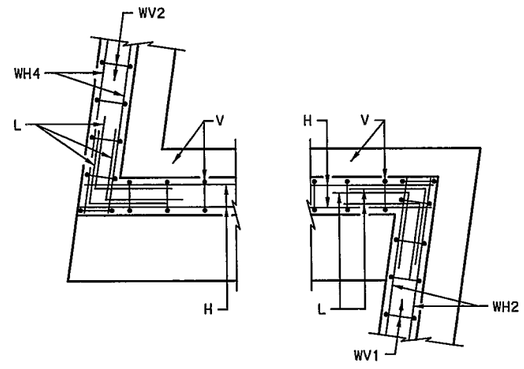

BACKWALL LEFT BACKWALL RIGHT

CORNER DETAILS

TABLE OF ESTIMATED QUANTITIES				
BAR	NO.	SIZE	LENGTH	WEIGHT
A	10	#11	35'- 8"	1,895
H1	10	#6	35'- 4"	531
H2	2	#6	3'- 0"	9
L	9	#6	4'- 0"	54
S	30	#5	11'- 4"	355
U	4	#6	8'- 1"	49
V	35	#5	14'- 2"	517
wH1	6	#6	15'- 3"	137
wH2	12	#6	13'- 6"	243
wH3	6	#6	19'- 5"	175
wH4	14	#6	17'- 8"	371
wS	34	#4	7'- 8"	174
wV1	15	#5	14'- 5"	226
wV2	19	#5	15'-10"	314
wD	6	#6	3'- 0"	27
REINFORCING STEEL			LB	5,077
CL C CONC (HPC) (ABUT)			CY	27.6

(1) DRILL AND GROUT 1'-6" MINIMUM INTO EXISTING WINGWALL. GROUT TO BE A NON-SHRINK GROUT.

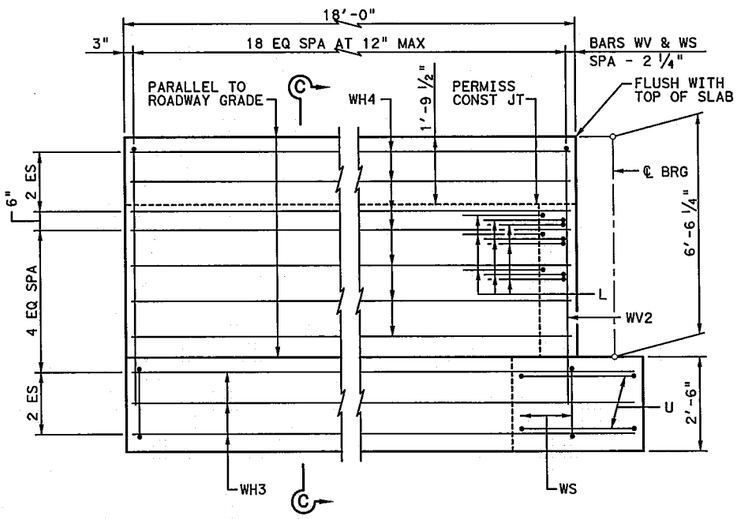

WINGWALL ELEVATION LEFT

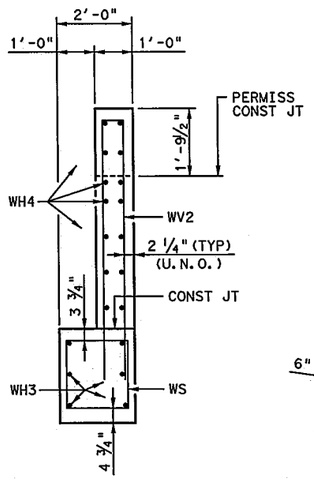

SECTION C-C

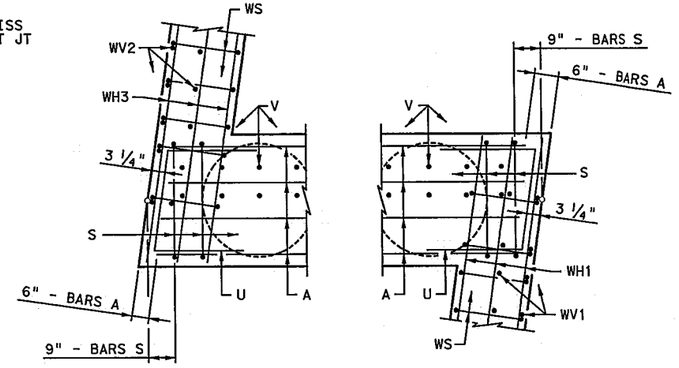

CAP LEFT CAP RIGHT

CORNER DETAILS

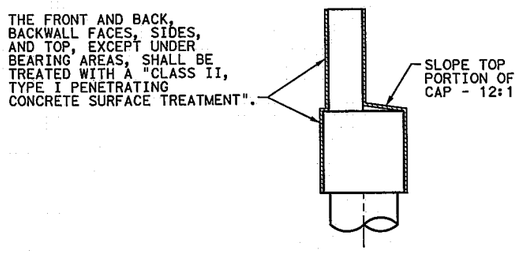

CONCRETE SURFACE TREATMENT DETAIL

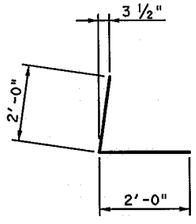

BARS L

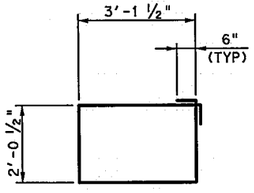

BARS S

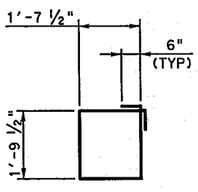

BARS WS

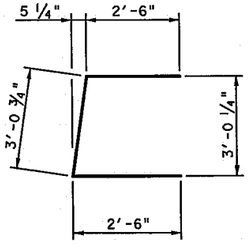

BARS U

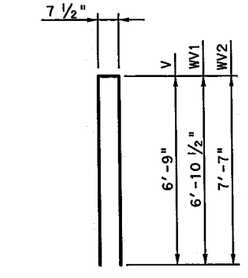

BARS V, WV1 & WV2

HL 93 LOADING

THOMAS G. ASHCRAFT 81411 REGISTERED PROFESSIONAL ENGINEER STATE OF TEXAS

Thomas G. Ashcraft 7/5/12

CP&Y, INC.
TBPE REGISTRATION NO. F-1741

Texas Department of Transportation
© 2012

IH 35W FROM NORTH TARRANT PKWY TO IH 820

ABUTMENT NO. 1

BASSWOOD BLVD SN TURNAROUND
IH 35W UNDERPASS

SCALE: NTS SHEET 2 OF 2

DESIGN	FED.RD. DIV.NO.	FEDERAL AID PROJECT NO.		HIGHWAY NO.
LVA	6	(SEE TITLE SHEET)		IH 35W
GRAPHICS GWS	STATE	DISTRICT	COUNTY	SHEET NO.
CHECK LVA	TEXAS	FTW	TARRANT	1546
CHECK TGA	CONTROL	SECTION	JOB	
	0014	16	255, ETC.	

FILENAME: S3BBR_BBSN_AB_02.dgn

DRAWING DATE: 7/13/2012

TABLE OF ELEVATIONS				
CAP	"A"	"B"	"C"	"D"
	666.534	665.783	672.333	672.288
WINGWALLS	"F"	"G"	"H"	"I"
	666.615	665.519	672.427	672.040
DRILLED SHAFT	DS1	DS2	DS3	DS4
	664.005	663.788	663.572	663.355
SHAFT TIP	633.005	632.788	632.572	632.355
AS-BUILT SHAFT TIP				

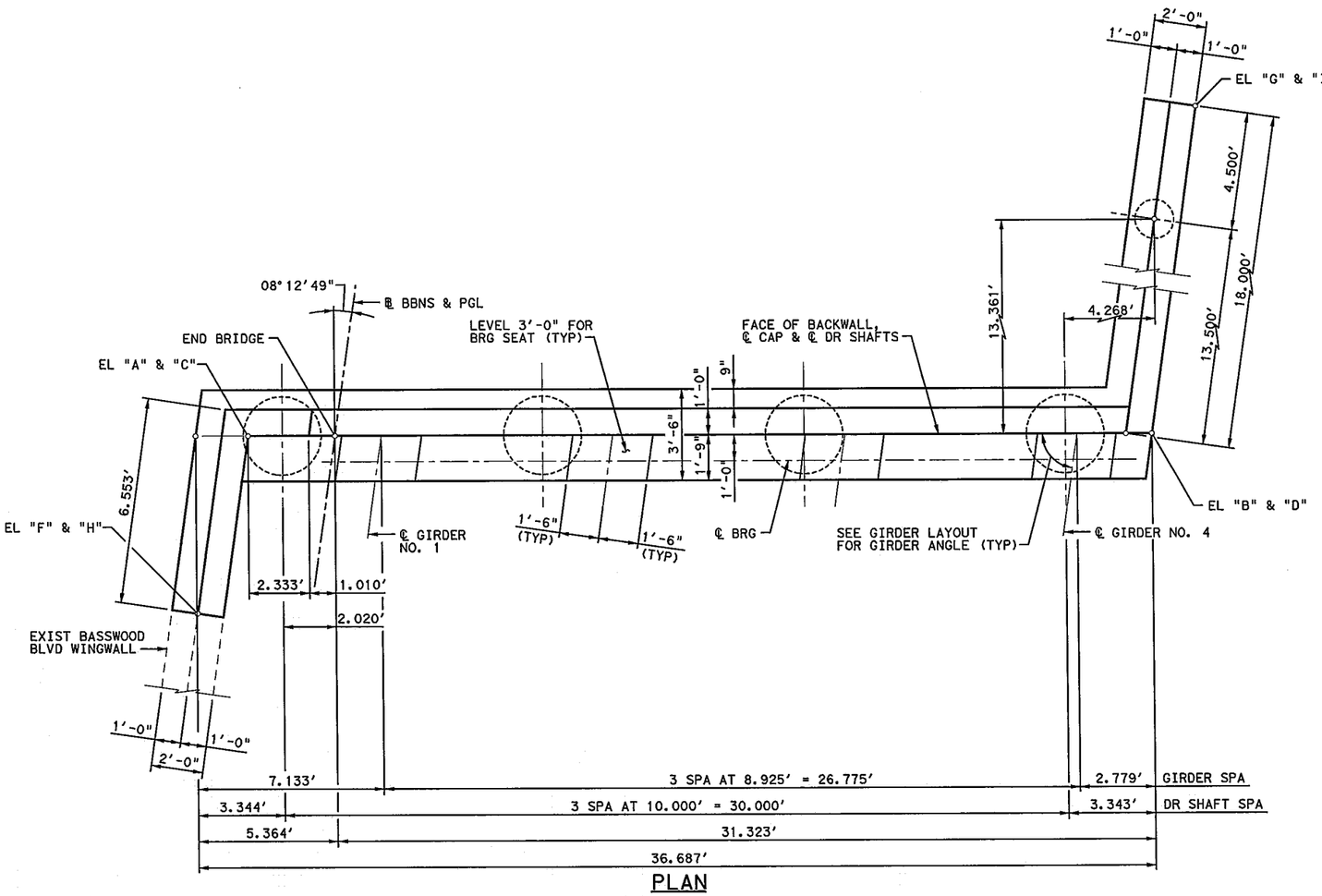

PLAN

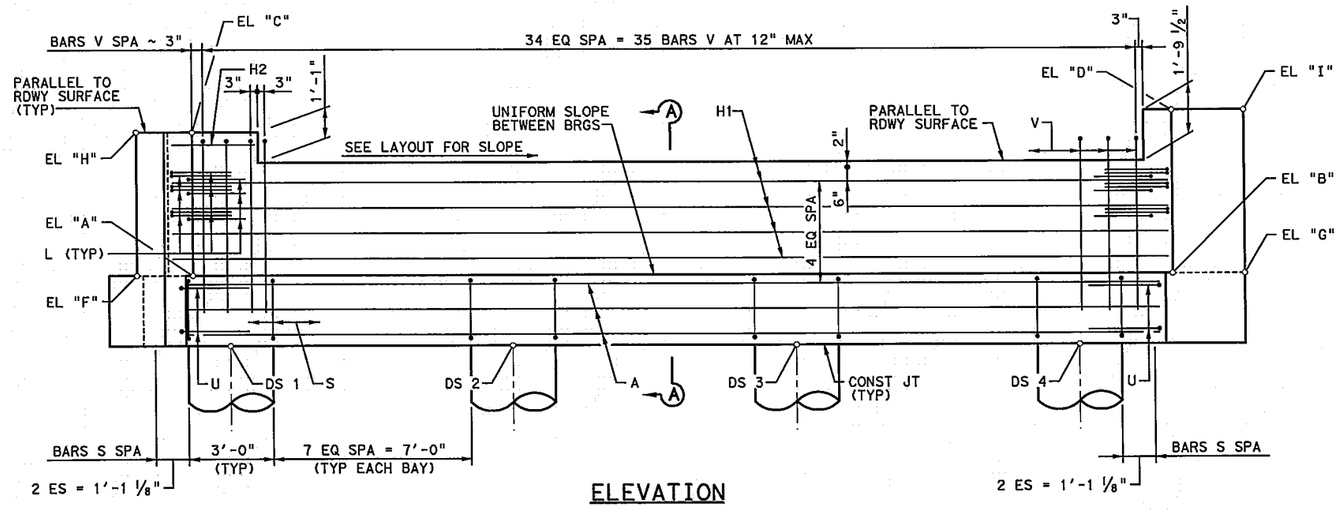

ELEVATION

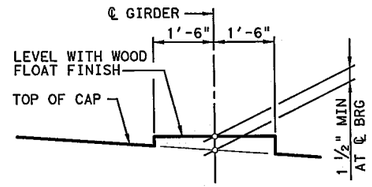

BEARING SEAT DETAIL

(BEARING SURFACE SHALL BE CLEAN AND FREE OF ALL LOOSE MATERIAL BEFORE PLACING BEARING PAD.)

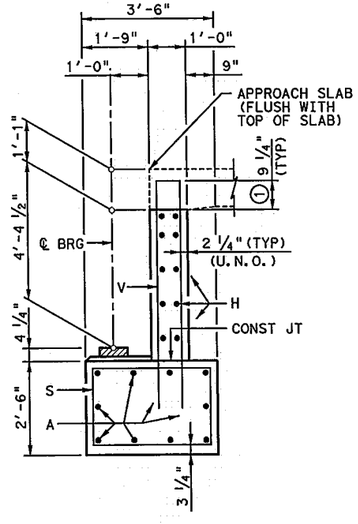

SECTION A-A

1 INCREASE AS REQUIRED TO MAINTAIN 3 3/4" FROM FINISHED GRADE.

GENERAL NOTES:

1. DESIGNED ACCORDING TO AASHTO LRFD BRIDGE DESIGN SPECIFICATIONS, 5TH EDITION (2010).
2. CLASS "C" (HPC) CONCRETE STRENGTH F'C = 3,600 PSI.
3. ALL CAP AND WALL REINFORCING SHALL BE GRADE 60.
4. CONTRACTOR TO VERIFY ALL DIMENSIONS IN THE FIELD PRIOR TO ORDERING MATERIALS OR COMMENCING CONSTRUCTION.
5. SEE FD STANDARD FOR ALL FOUNDATION DETAILS AND NOTES.
6. SEE RAIL STANDARD FOR RAIL ANCHORAGE IN WINGWALLS.
7. CALCULATED FOUNDATION LOADS:
   CAP DRILLED SHAFTS = 78 TONS/D.S.
   WINGWALL DRILLED SHAFTS = 10 TONS/D.S.

STATE OF TEXAS
THOMAS G. ASHCRAFT
81411
REGISTERED PROFESSIONAL ENGINEER

7/5/12

HL 93 LOADING

CP&Y, INC.
TBPE REGISTRATION NO. F-1741

Texas Department of Transportation
© 2012

IH 35W FROM NORTH TARRANT PKWY TO IH 820

ABUTMENT NO. 5

BASSWOOD BLVD SN TURNAROUND
IH 35W UNDERPASS

SCALE: NTS — SHEET 1 OF 2

DESIGN	FED. RD. DIV. NO.	FEDERAL AID PROJECT NO.		HIGHWAY NO.
LVA	6	(SEE TITLE SHEET)		IH 35W
GRAPHICS GWS	STATE	DISTRICT	COUNTY	SHEET NO.
CHECK LVA	TEXAS	FTW	TARRANT	1547
CHECK TGA	CONTROL	SECTION	JOB	
	0014	16	255, ETC.	

FILENAME: S3BBR*BBSN*AB*03.dgn
DRAWING DATE: 7/13/2012

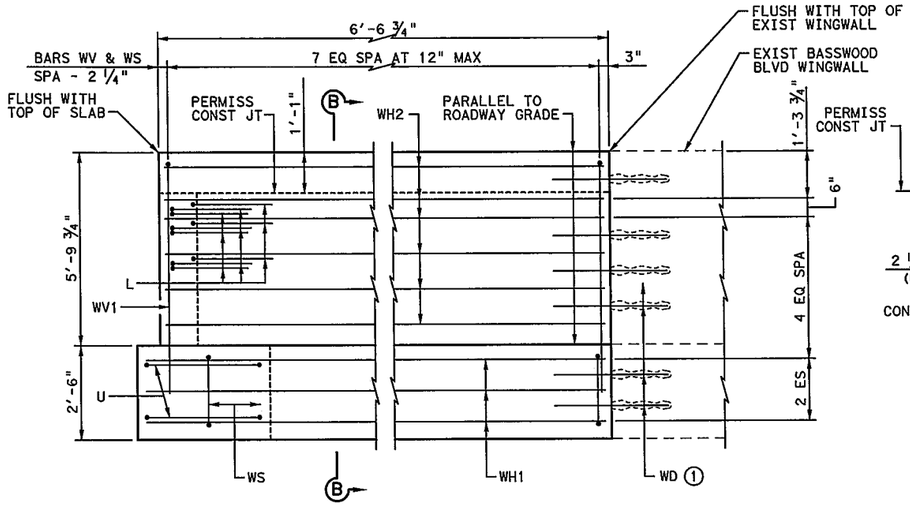

WINGWALL ELEVATION RIGHT

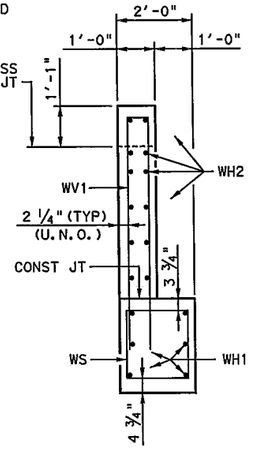

SECTION B-B

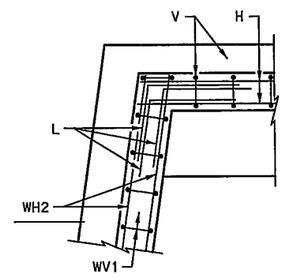

BACKWALL RIGHT

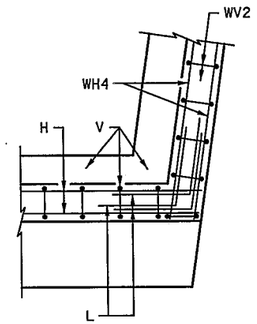

BACKWALL LEFT

CORNER DETAILS

TABLE OF ESTIMATED QUANTITIES				
BAR	NO.	SIZE	LENGTH	WEIGHT
A	10	#11	35'- 8"	1,895
H1	10	#6	35'- 4"	531
H2	2	#6	3'- 0"	9
L	9	#6	4'- 0"	54
S	30	#5	11'- 4"	355
U	4	#6	8'- 1"	49
V	35	#5	14'- 2"	517
wH1	6	#6	8'- 0"	72
wH2	12	#6	6'- 3"	113
wH3	6	#6	19'- 5"	175
wH4	14	#6	17'- 8"	371
wS	27	#4	7'- 8"	138
wV1	8	#5	14'- 5"	120
wV2	19	#5	15'-10"	314
wD	6	#6	3'- 0"	27
REINFORCING STEEL			LB	4,740
CL C CONC (HPC) (ABUT)			CY	30.4

(1) DRILL AND GROUT 1'-6" MINIMUM INTO EXISTING WINGWALL. GROUT TO BE A NON-SHRINK GROUT.

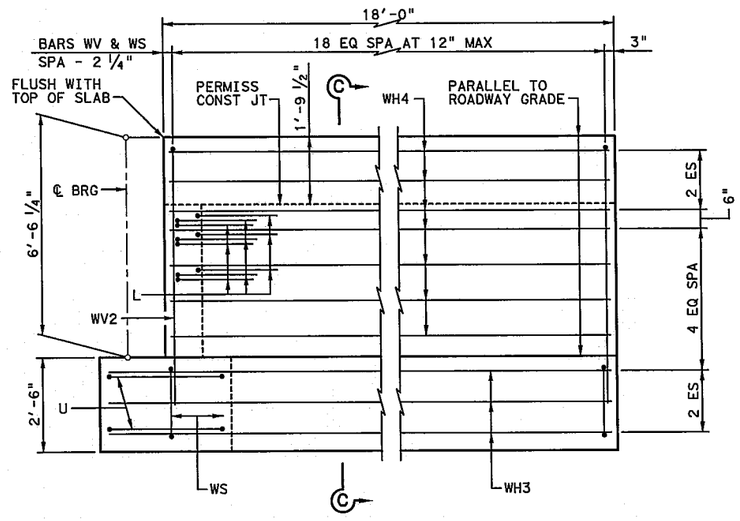

WINGWALL ELEVATION LEFT

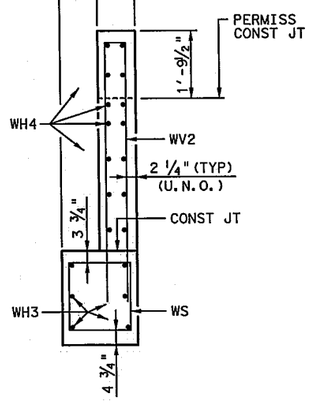

SECTION C-C

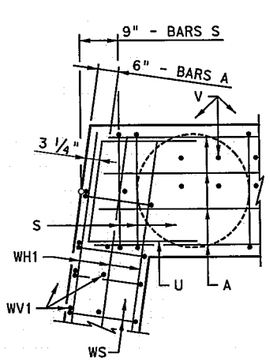

CAP RIGHT

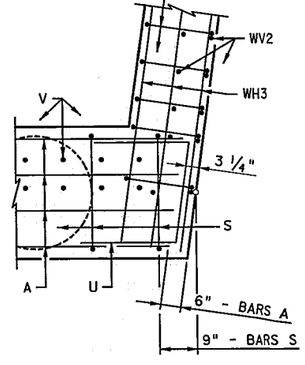

CAP LEFT

CORNER DETAILS

HL 93 LOADING

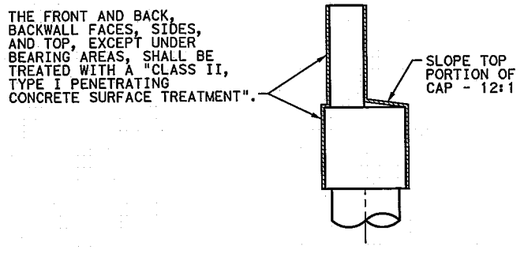

CONCRETE SURFACE TREATMENT DETAIL

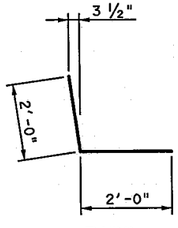

BARS L

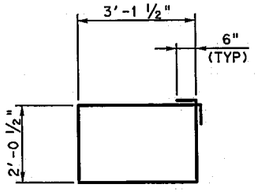

BARS S

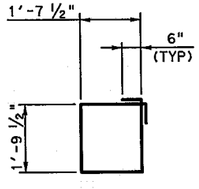

BARS WS

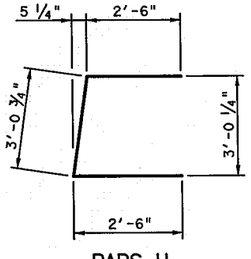

BARS U

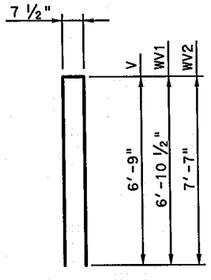

BARS V, WV1 & WV2

STATE OF TEXAS
THOMAS G. ASHCRAFT
81411
REGISTERED
PROFESSIONAL ENGINEER
Thomas G. Ashcraft
7/5/12

CP&Y, INC.
TBPE REGISTRATION NO. F-1741

Texas Department of Transportation
© 2012

IH 35W FROM NORTH TARRANT PKWY TO IH 820

ABUTMENT NO. 5

BASSWOOD BLVD SN TURNAROUND

IH 35W UNDERPASS

SCALE: NTS

SHEET 2 OF 2

DESIGN	FED.RD. DIV.NO.	FEDERAL AID PROJECT NO.		HIGHWAY NO.
LVA	6	(SEE TITLE SHEET)		IH 35W
GRAPHICS GWS	STATE	DISTRICT	COUNTY	SHEET NO.
CHECK LVA	TEXAS	FTW	TARRANT	1548
CHECK TGA	CONTROL	SECTION	JOB	
	0014	16	255, ETC.	

FILENAME: S3BBR_BBSN_AB_04.dgn

DRAWING DATE: 7/13/2012

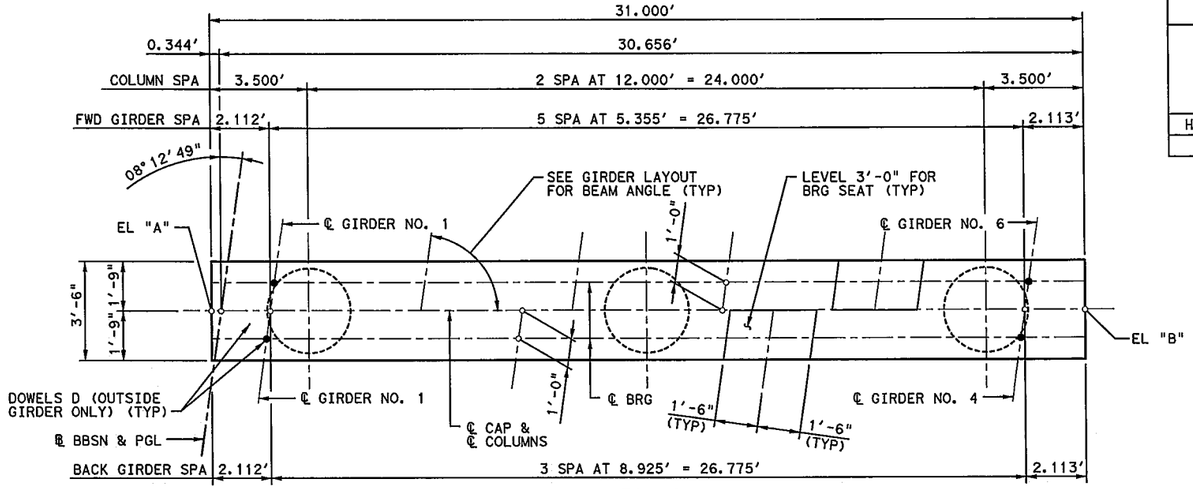

PLAN

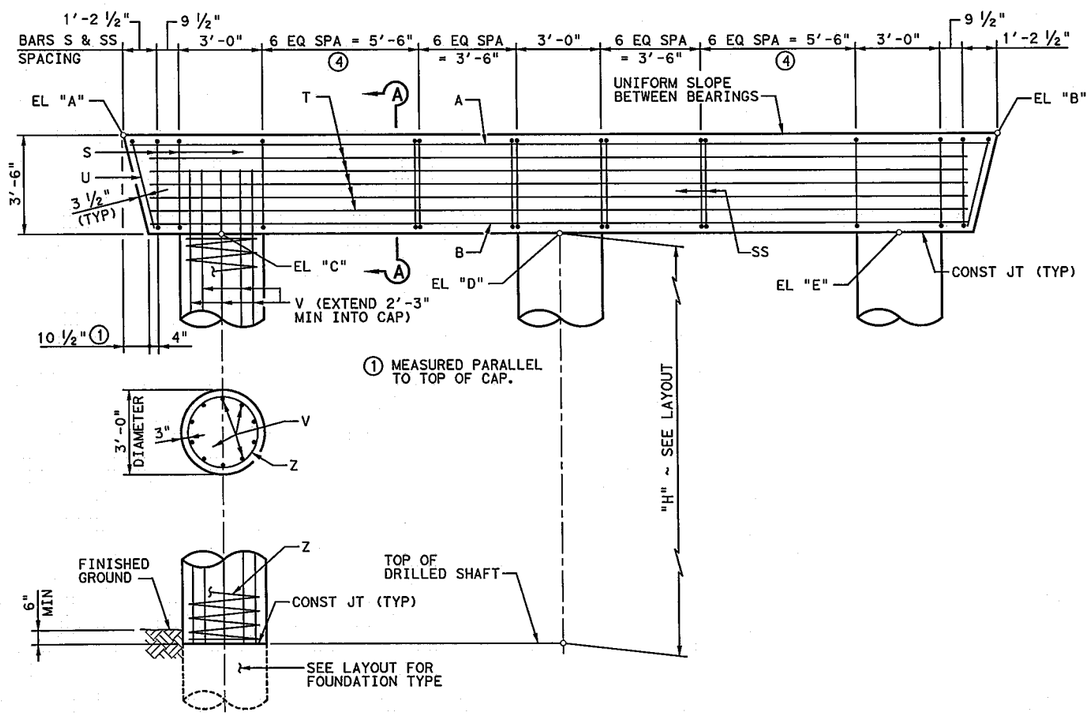

ELEVATION

② TABLE OF COLUMN QUANTITIES

"H"	CL C CONC (HPC) (COLUMN)	BARS V 30 - # 9		BARS Z 3 - #3 SPIRAL	
HEIGHT	CY	LENGTH	WEIGHT	LENGTH	WEIGHT
14'	11.0	16'- 3"	1,658	237'	267

③ TOTAL ESTIMATED QUANTITIES

REINF STEEL	CL C CONC (HPC) (BENT)
LB	CY
5,094	24.9

TABLE OF ELEVATIONS

"A"	"B"	"C"	"D"	"E"
666.925	666.356	663.361	663.140	662.920
TOP OF DS ④		DS 1	DS 2	DS 3
		648.904	649.140	648.920
SHAFT TIP		626.904	627.140	626.920
AS-BUILT SHAFT TIP				

TABLE OF CONSTANT QUANTITIES

BAR	NO.	SIZE	LENGTH	WEIGHT
A	8	#11	30'- 7"	1,300
B	6	#11	29'- 0"	924
D	4	1¼" D	1'- 8"	28
S	30	#5	13'- 6"	422
SS	14	#5	11'-10"	173
T	10	#5	29'- 0"	302
U	2	#5	9'- 7"	20
REINFORCING STEEL			LB	3,169
CL C CONC (HPC) (CAP)			CY	13.9

② ADJUST BARS V LENGTH BY 1 FT AND BARS Z LENGTH BY 15.74 FT FOR EACH LINEAR FOOT OF VARIATION IN "H" VALUE.

③ ADJUST REINFORCING STEEL TOTAL BY 140 LBS AND CLASS "C" CONCRETE TOTAL BY 0.7854 CY FOR EACH LINEAR FOOT OF VARIATION IN "H" VALUE.

④ TOP OF DRILLED SHAFT ELEVATIONS WERE ESTIMATED BASED ON GROUND ELEVATION INFORMATION AVAILABLE AT THE TIME OF DESIGN. CONTRACTOR SHALL CONFIRM THESE ELEVATIONS PRIOR TO DRILLING.

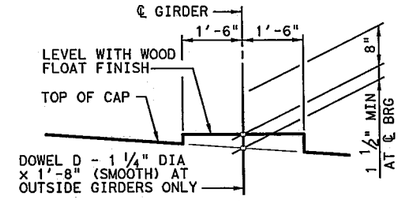

BEARING SEAT DETAIL

(BEARING SURFACE SHALL BE CLEAN AND FREE OF ALL LOOSE MATERIAL BEFORE PLACING BEARING PAD.)

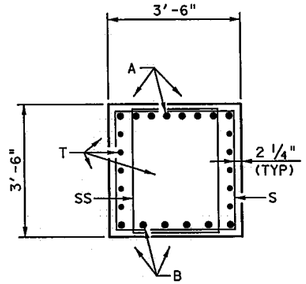

SECTION A-A

④ BARS S ONLY IN THIS SECTION.

GENERAL NOTES:

1. DESIGNED ACCORDING TO AASHTO LRFD BRIDGE DESIGN SPECIFICATIONS, 5TH EDITION (2010).
2. CLASS "C"(HPC) CONCRETE STRENGTH F'C = 3,600 PSI.
3. ALL REINFORCING SHALL BE GRADE 60.
4. COLUMN REINFORCING MAY BE GRADE 40.
5. SEE FD STANDARD FOR ALL FOUNDATION DETAILS AND NOTES.
6. CALCULATED FOUNDATION LOADS: 241 TONS/D.S.

STATE OF TEXAS
THOMAS G. ASHCRAFT
81411
REGISTERED
PROFESSIONAL ENGINEER

7/5/12

HL 93 LOADING

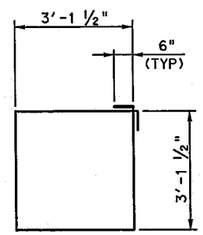

BARS S

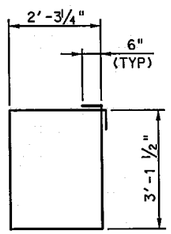

BARS SS

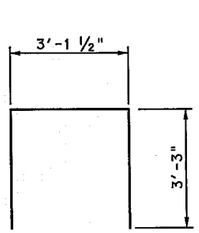

BARS U

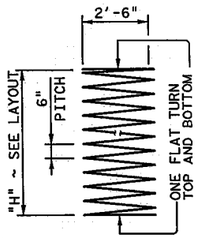

BARS Z

CP&Y, INC.
TBPE REGISTRATION NO. F-1741

Texas Department of Transportation
© 2012

IH 35W FROM NORTH TARRANT PKWY TO IH 820

INTERIOR BENT NO. 2

BASSWOOD BLVD SN TURNAROUND

IH 35W UNDERPASS

SCALE: NTS — SHEET 1 OF 1

DESIGN	FED. RD. DIV. NO.	FEDERAL AID PROJECT NO.		HIGHWAY NO.
LVA	6	(SEE TITLE SHEET)		IH 35W
GRAPHICS PMB	STATE	DISTRICT	COUNTY	SHEET NO.
CHECK LVA	TEXAS	FTW	TARRANT	1549
CHECK TGA	CONTROL	SECTION	JOB	
	0014	16	255, ETC.	

FILENAME: S3BBR_BBSN_IB_01.dgn

DRAWING DATE: 7/13/2012

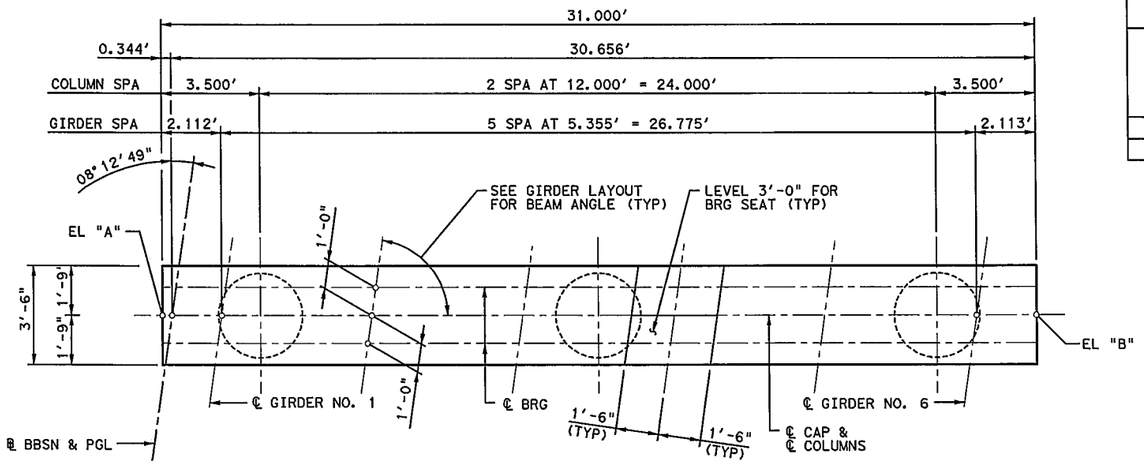

PLAN

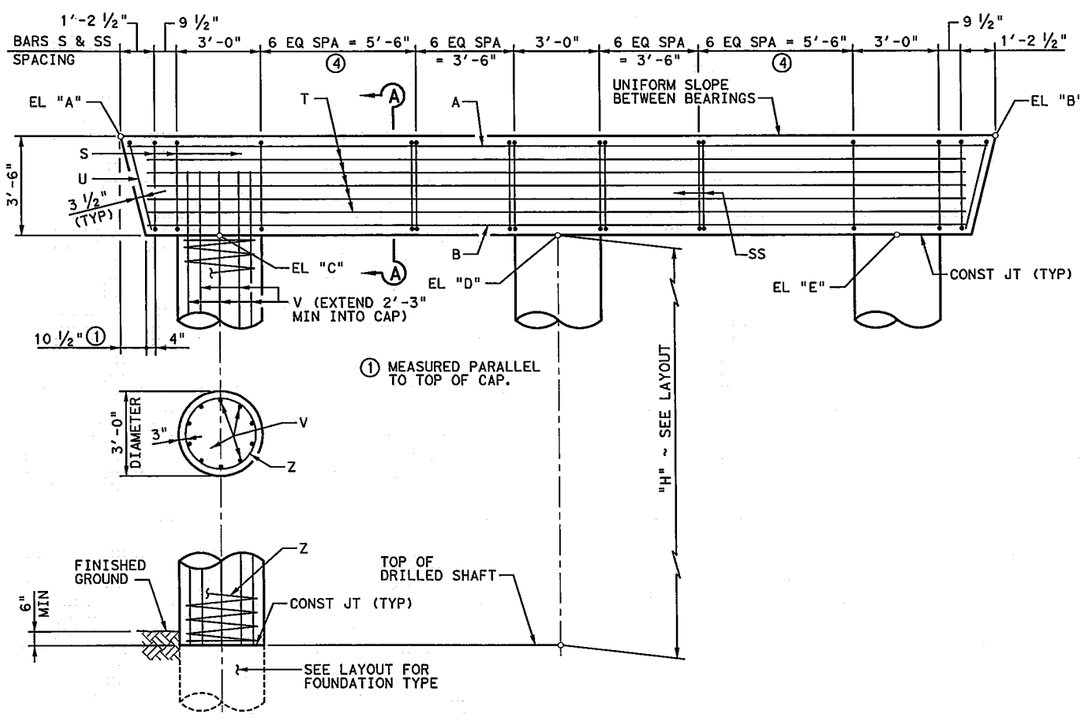

ELEVATION

THE TOP, SIDES, AND ENDS, EXCEPT UNDER BEARING AREAS, SHALL BE TREATED WITH A "CLASS II, TYPE I PENETRATING CONCRETE SURFACE TREATMENT"

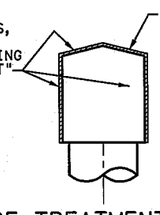

CONCRETE SURFACE TREATMENT DETAIL

② TABLE OF COLUMN QUANTITIES

"H"	CL C CONC (HPC) (COLUMN)	BARS V 30 - # 9		BARS Z 3 - #3 SPIRAL	
HEIGHT	CY	LENGTH	WEIGHT	LENGTH	WEIGHT
14'	11.0	16'- 3"	1,658	237'	267

③ TOTAL ESTIMATED QUANTITIES

REINF STEEL	CL C CONC (HPC) (BENT)
LB	CY
5,066	25.0

TABLE OF ELEVATIONS

"A"	"B"	"C"	"D"	"E"
667.658	667.050	664.090	663.854	663.618
TOP OF DS ④		DS 1	DS 2	DS 3
		649.731	649.854	649.618
SHAFT TIP		630.731	630.854	630.618
AS-BUILT SHAFT TIP				

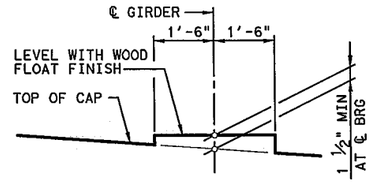

BEARING SEAT DETAIL

(BEARING SURFACE SHALL BE CLEAN AND FREE OF ALL LOOSE MATERIAL BEFORE PLACING BEARING PAD.)

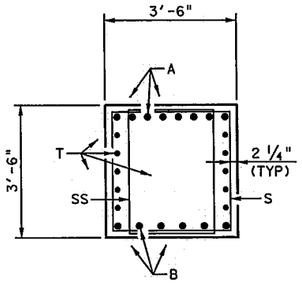

SECTION A-A

④ BARS S ONLY IN THIS SECTION.

TABLE OF CONSTANT QUANTITIES

BAR	NO.	SIZE	LENGTH	WEIGHT
A	8	#11	30'- 7"	1,300
B	6	#11	29'- 0"	924
S	30	#5	13'- 6"	422
SS	14	#5	11'-10"	173
T	10	#5	29'- 0"	302
U	2	#5	9'- 7"	20
REINFORCING STEEL			LB	3,141
CL C CONC (HPC) (CAP)			CY	14.0

② ADJUST BARS V LENGTH BY 1 FT AND BARS Z LENGTH BY 15.74 FT FOR EACH LINEAR FOOT OF VARIATION IN "H" VALUE.

③ ADJUST REINFORCING STEEL TOTAL BY 140 LBS AND CLASS "C" CONCRETE TOTAL BY 0.7854 CY FOR EACH LINEAR FOOT OF VARIATION IN "H" VALUE.

④ TOP OF DRILLED SHAFT ELEVATIONS WERE ESTIMATED BASED ON GROUND ELEVATION INFORMATION AVAILABLE AT THE TIME OF DESIGN. CONTRACTOR SHALL CONFIRM THESE ELEVATIONS PRIOR TO DRILLING.

GENERAL NOTES:

1. DESIGNED ACCORDING TO AASHTO LRFD BRIDGE DESIGN SPECIFICATIONS, 5TH EDITION (2010).
2. CLASS "C"(HPC) CONCRETE STRENGTH F'C = 3,600 PSI.
3. ALL REINFORCING SHALL BE GRADE 60.
4. COLUMN REINFORCING MAY BE GRADE 40.
5. SEE FD STANDARD FOR ALL FOUNDATION DETAILS AND NOTES.
6. CALCULATED FOUNDATION LOADS: 305 TONS/D.S.

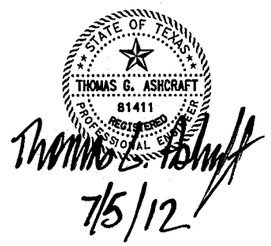

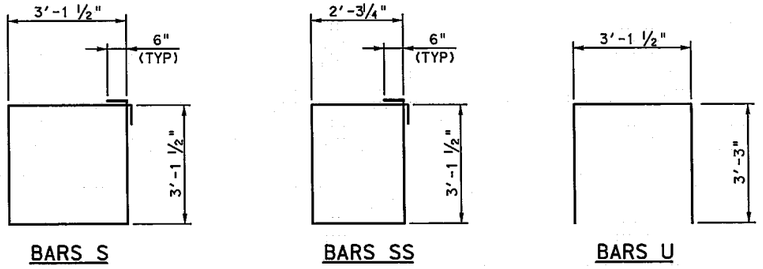

HL 93 LOADING

CP&Y, INC.
TBPE REGISTRATION NO. F-1741

Texas Department of Transportation
© 2012

IH 35W FROM NORTH TARRANT PKWY TO IH 820

INTERIOR BENT NO. 3

BASSWOOD BLVD SN TURNAROUND
IH 35W UNDERPASS

SCALE: NTS — SHEET 1 OF 1

DESIGN	FED. RD. DIV. NO.	FEDERAL AID PROJECT NO.		HIGHWAY NO.
LVA	6	(SEE TITLE SHEET)		IH 35W
GRAPHICS PMB	STATE	DISTRICT	COUNTY	SHEET NO.
CHECK LVA	TEXAS	FTW	TARRANT	1550
CHECK TGA	CONTROL 0014	SECTION 16	JOB 255, ETC.	

FILENAME: S3BBR*BBSN*IB*02.dgn
DRAWING DATE: 7/13/2012

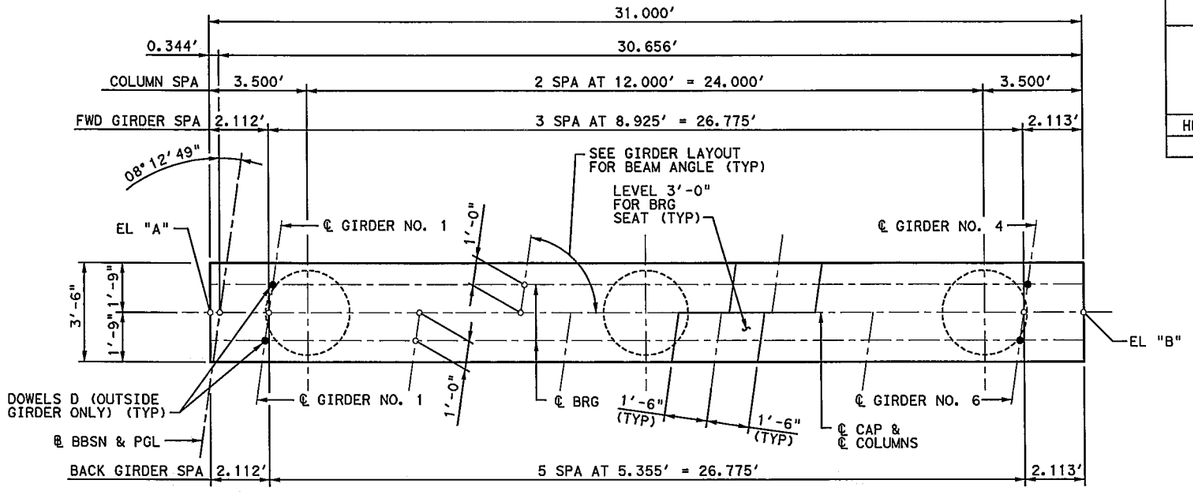

PLAN

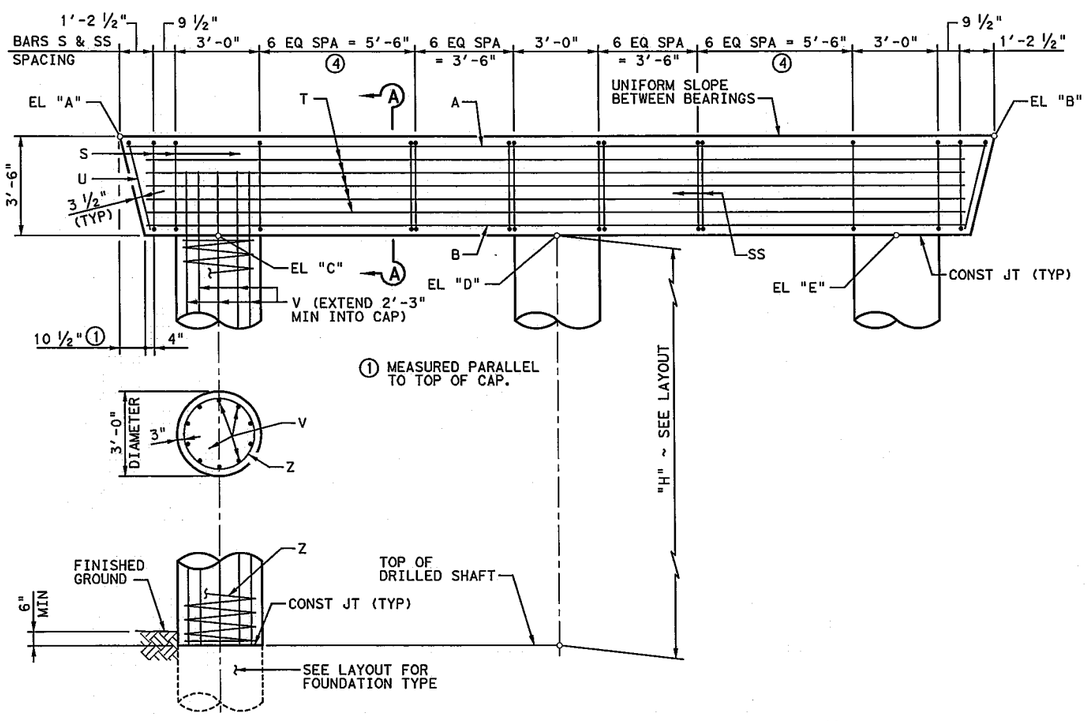

ELEVATION

② TABLE OF COLUMN QUANTITIES

"H"	CL C CONC (HPC) (COLUMN)	BARS V 30 - # 9		BARS Z 3 - #3 SPIRAL	
HEIGHT	CY	LENGTH	WEIGHT	LENGTH	WEIGHT
14'	11.0	16'- 3"	1,658	237'	267

③ TOTAL ESTIMATED QUANTITIES

REINF STEEL	CL C CONC (HPC) (BENT)
LB	CY
5,094	24.9

TABLE OF ELEVATIONS

"A"	"B"	"C"	"D"	"E"
667.236	666.587	663.663	663.411	663.160
TOP OF DS ④		DS 1	DS 2	DS 3
		649.623	649.411	649.160
SHAFT TIP		630.623	630.411	630.160
AS-BUILT SHAFT TIP				

TABLE OF CONSTANT QUANTITIES

BAR	NO.	SIZE	LENGTH	WEIGHT
A	8	#11	30'- 7"	1,300
B	6	#11	29'- 0"	924
D	4	1¼" D	1'- 8"	28
S	30	#5	13'- 6"	422
SS	14	#5	11'-10"	173
T	10	#5	29'- 0"	302
U	2	#5	9'- 7"	20
REINFORCING STEEL			LB	3,169
CL C CONC (HPC) (CAP)			CY	13.9

② ADJUST BARS V LENGTH BY 1 FT AND BARS Z LENGTH BY 15.74 FT FOR EACH LINEAR FOOT OF VARIATION IN "H" VALUE.

③ ADJUST REINFORCING STEEL TOTAL BY 140 LBS AND CLASS "C" CONCRETE TOTAL BY 0.7854 CY FOR EACH LINEAR FOOT OF VARIATION IN "H" VALUE.

④ TOP OF DRILLED SHAFT ELEVATIONS WERE ESTIMATED BASED ON GROUND ELEVATION INFORMATION AVAILABLE AT THE TIME OF DESIGN. CONTRACTOR SHALL CONFIRM THESE ELEVATIONS PRIOR TO DRILLING.

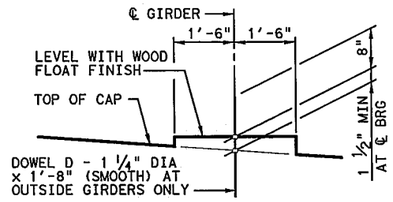

BEARING SEAT DETAIL

(BEARING SURFACE SHALL BE CLEAN AND FREE OF ALL LOOSE MATERIAL BEFORE PLACING BEARING PAD.)

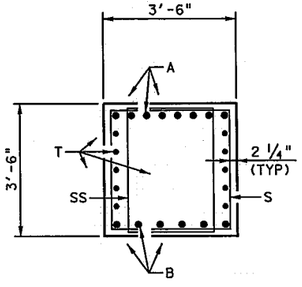

SECTION A-A

④ BARS S ONLY IN THIS SECTION.

GENERAL NOTES:

1. DESIGNED ACCORDING TO AASHTO LRFD BRIDGE DESIGN SPECIFICATIONS, 5TH EDITION (2010).
2. CLASS "C" (HPC) CONCRETE STRENGTH F'C = 3,600 PSI.
3. ALL REINFORCING STEEL SHALL BE GRADE 60.
4. SEE FD STANDARD FOR ALL FOUNDATION DETAILS AND NOTES.
5. CALCULATED FOUNDATION LOADS: 241 TONS/D.S.

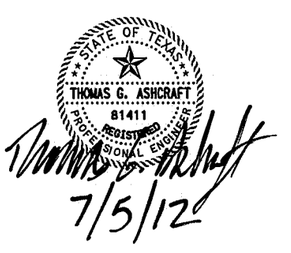

HL 93 LOADING

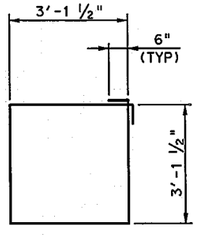

BARS S

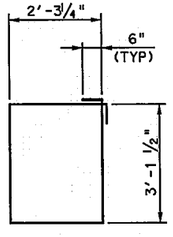

BARS SS

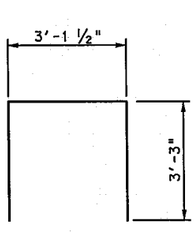

BARS U

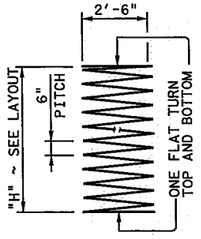

BARS Z

CP&Y, INC.
TBPE REGISTRATION NO. F-1741

Texas Department of Transportation
© 2012

IH 35W FROM NORTH TARRANT PKWY TO IH 820

INTERIOR BENT NO. 4

BASSWOOD BLVD SN TURNAROUND

IH 35W UNDERPASS

SCALE: NTS — SHEET 1 OF 1

DESIGN	FED.RD. DIV.NO.	FEDERAL AID PROJECT NO.		HIGHWAY NO.
LVA	6	(SEE TITLE SHEET)		IH 35W
GRAPHICS PMB	STATE	DISTRICT	COUNTY	SHEET NO.
CHECK LVA	TEXAS	FTW	TARRANT	1551
CHECK TGA	CONTROL	SECTION	JOB	
	0014	16	255, ETC.	

DRAWING DATE: 7/13/2012
FILENAME: S3BBR*BBSN*IB*03.dgn

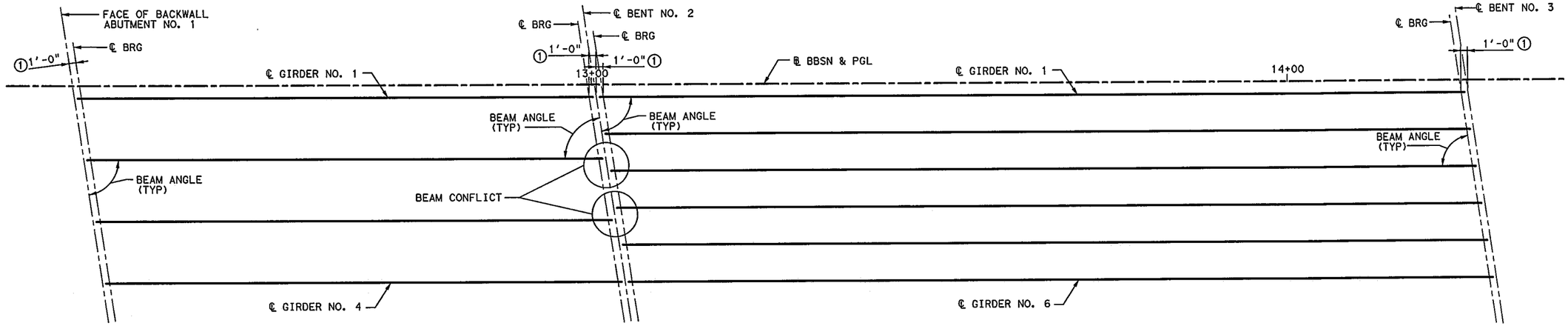

SPAN 1
(TX54 GIRDERS)

SPAN 2
(TX54 GIRDERS)

① SEE IGEB STANDARD FOR ORIENTATION OF DIMENSION.

② GIRDER LENGTHS SHOWN ARE BOTTOM GIRDER FLANGE LENGTHS WITH ADJUSTMENTS MADE FOR BEAM SLOPE.

BENT REPORT

ABUT NO. 1 (N 9 1 26.42 W)
DISTANCE BETWEEN STATION LINE AND BEAM 1 1.768 R

		BEAM SPAC. (C.L. BENT)	BEAM ANGLE D M S
SPAN 1	BEAM 1	0.000	81 47 11
	BEAM 2	8.925	81 47 11
	BEAM 3	8.925	81 47 11
	BEAM 4	8.925	81 47 11
	TOTAL	26.775	

BENT NO. 2 (N 9 1 26.42 W)
DISTANCE BETWEEN STATION LINE AND BEAM 1 1.768 R

		BEAM SPAC. (C.L. BENT)	BEAM ANGLE D M S
SPAN 1	BEAM 1	0.000	81 47 11
	BEAM 2	8.925	81 47 11
	BEAM 3	8.925	81 47 11
	BEAM 4	8.925	81 47 11
	TOTAL	26.775	
SPAN 2	BEAM 1	0.000	81 47 11
	BEAM 2	5.355	81 47 11
	BEAM 3	5.355	81 47 11
	BEAM 4	5.355	81 47 11
	BEAM 5	5.355	81 47 11
	BEAM 6	5.355	81 47 11
	TOTAL	26.775	

BENT NO. 3 (N 9 1 26.42 W)
DISTANCE BETWEEN STATION LINE AND BEAM 1 1.768 R

		BEAM SPAC. (C.L. BENT)	BEAM ANGLE D M S
SPAN 2	BEAM 1	0.000	81 47 11
	BEAM 2	5.355	81 47 11
	BEAM 3	5.355	81 47 11
	BEAM 4	5.355	81 47 11
	BEAM 5	5.355	81 47 11
	BEAM 6	5.355	81 47 11
	TOTAL	26.775	

BEAM REPORT

BEAM REPORT, SPAN 1

	HORIZONTAL DISTANCE C-C BENT	C-C BRG.	TRUE DISTANCE BOT. BM. FLG. ②	BEAM SLOPE
BEAM 1	75.000	72.990	74.50	0.0129
BEAM 2	75.000	72.990	74.50	0.0129
BEAM 3	75.000	72.990	74.50	0.0128
BEAM 4	75.000	72.990	74.50	0.0127

BEAM REPORT, SPAN 2

	HORIZONTAL DISTANCE C-C BENT	C-C BRG.	TRUE DISTANCE BOT. BM. FLG. ②	BEAM SLOPE
BEAM 1	126.000	124.000	125.50	0.0057
BEAM 2	126.000	124.000	125.50	0.0057
BEAM 3	126.000	124.000	125.50	0.0056
BEAM 4	126.000	124.000	125.50	0.0056
BEAM 5	126.000	124.000	125.50	0.0055
BEAM 6	126.000	124.000	125.50	0.0055

STATE OF TEXAS
THOMAS G. ASHCRAFT
81411
REGISTERED PROFESSIONAL ENGINEER

7/5/12

HL 93 LOADING

CP&Y, INC.
TBPE REGISTRATION NO. F-1741

Texas Department of Transportation
© 2012

IH 35W FROM NORTH TARRANT PKWY TO IH 820

GIRDER LAYOUT (SPANS 1 & 2)

BASSWOOD BLVD SN TURNAROUND

IH 35W UNDERPASS

SCALE: NTS

SHEET 1 OF 1

DESIGN	FED. RD. DIV. NO.	FEDERAL AID PROJECT NO.		HIGHWAY NO.
LVA	6	(SEE TITLE SHEET)		IH 35W
GRAPHICS PMB	STATE	DISTRICT	COUNTY	SHEET NO.
CHECK LVA	TEXAS	FTW	TARRANT	1552
CHECK TGA	CONTROL 0014	SECTION 16	JOB 255, ETC.	

DRAWING DATE: 7/13/2012 FILENAME: S3BBR_BBSN_GF_01.dgn

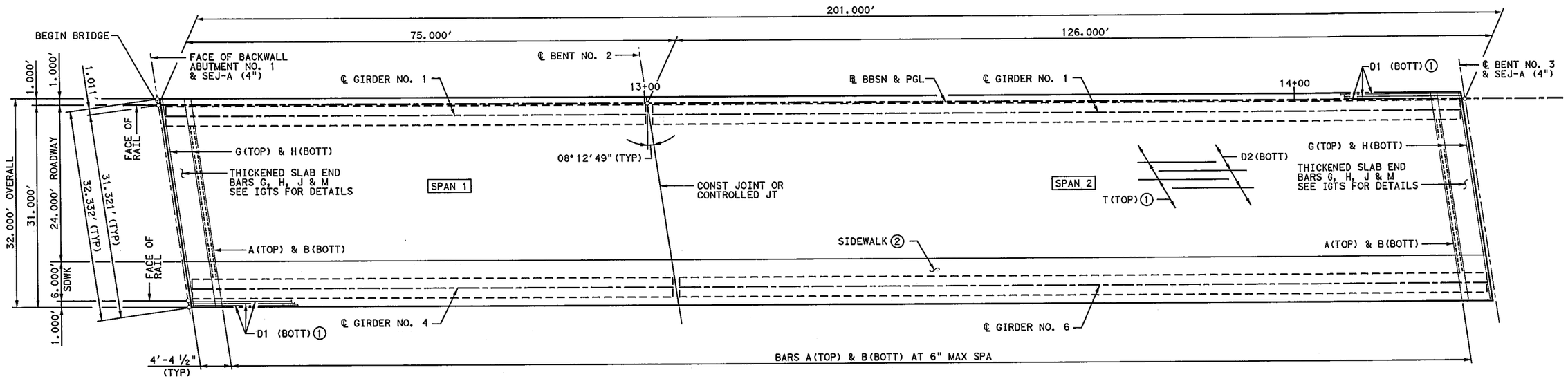

PLAN

HL 93 LOADING

① 2" END COVER ON BARS D1 AND T.

② SEE BRSM STANDARD FOR DETAILS & INFORMATION NOT SHOWN.

STATE OF TEXAS
THOMAS G. ASHCRAFT
81411
REGISTERED
PROFESSIONAL ENGINEER

7/5/12

CP&Y, INC.
TBPE REGISTRATION NO. F-1741

Texas Department of Transportation
© 2012

IH 35W FROM NORTH TARRANT PKWY TO IH 820

201.00' PRESTRESSED CONCRETE I-GIRDER UNIT (SPANS 1 & 2)

BASSWOOD BLVD SN TURNAROUND

IH 35W UNDERPASS

SCALE: NTS — SHEET 1 OF 2

DESIGN	FED. RD. DIV. NO.	FEDERAL AID PROJECT NO.		HIGHWAY NO.
LVA	6	(SEE TITLE SHEET)		IH 35W
GRAPHICS	STATE	DISTRICT	COUNTY	SHEET NO.
PMB	TEXAS	FTW	TARRANT	1553
CHECK	CONTROL	SECTION	JOB	
LVA	0014	16	255, ETC.	
CHECK				
TGA				

DRAWING DATE: 7/13/2012 FILENAME: S3BBR_BBSN_PB_01.dgn

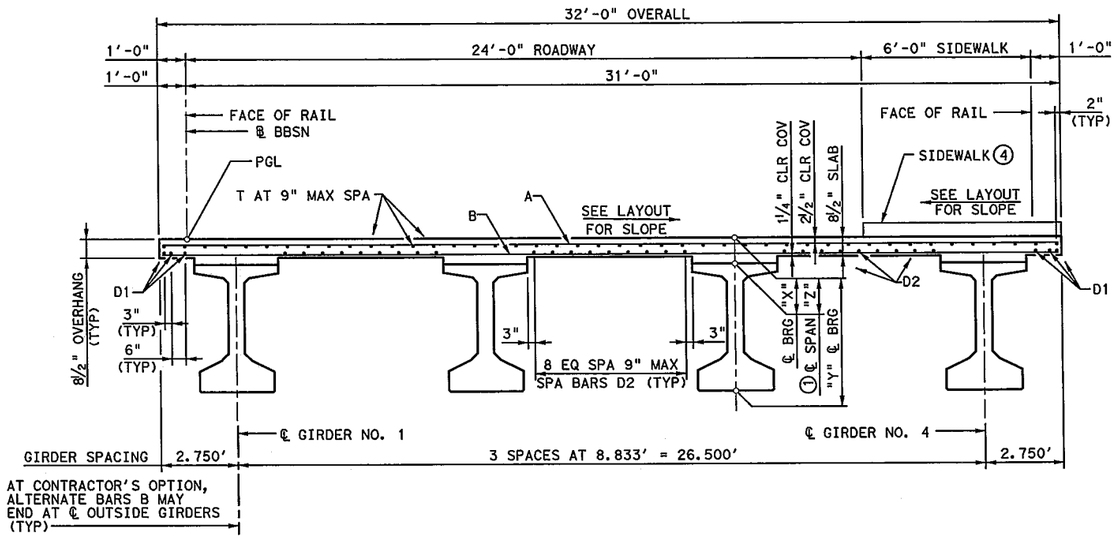

TYPICAL TRANSVERSE SECTION - SPAN 1

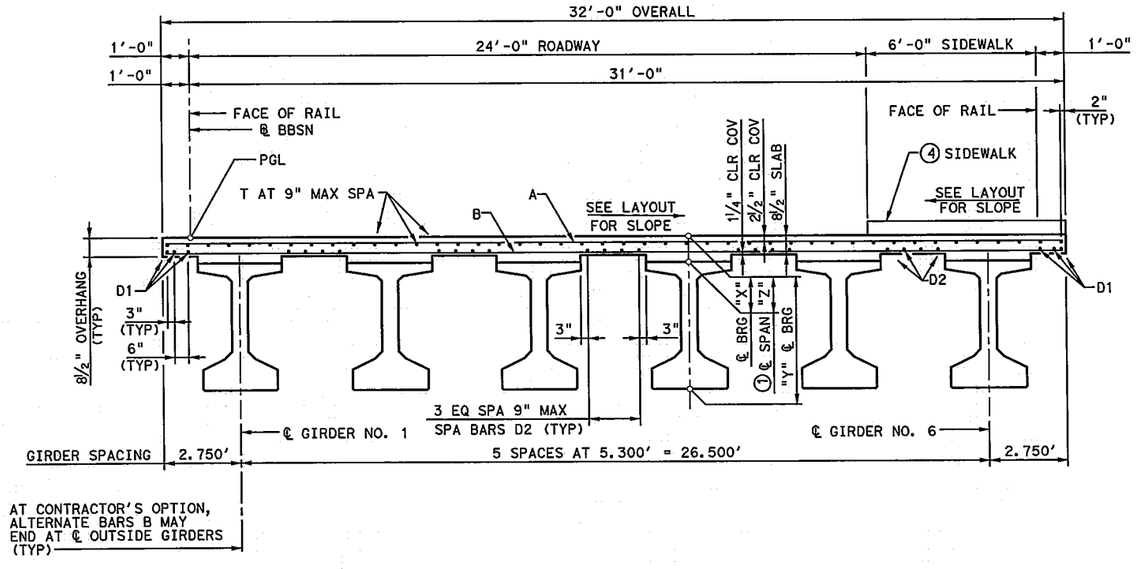

TYPICAL TRANSVERSE SECTION - SPAN 2

TABLE OF SECTION DEPTHS

SPAN NO.	GIRDER NO.	"X" AT ℄ BRG	"Y" AT ℄ BRG	"Z" AT ℄ SPAN①
1	ALL	11½"	5'-5½"	10½"
2	ALL	11½"	5'-5½"	10½"

① THEORETICAL DIMENSION

BAR TABLE

BAR	SIZE
A	#5
B	#5
D	#5
G	#5
H	#5
J	#5
M	#5
T	#4

SPAN NO.	GIRDER NO.	"A"	"B"
		FT	FT
1	2-3	0.024	0.033
2	2-5	0.117	0.167

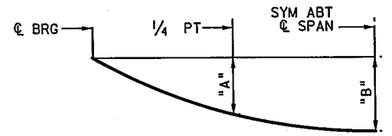

DEAD LOAD DEFLECTION DIAGRAM

CALCULATED DEFLECTIONS SHOWN ARE DUE TO THE CONCRETE SLAB ON INTERIOR GIRDERS ONLY (EC = 5000 KSI). ADJUST VALUES AS REQUIRED FOR EXTERIOR GIRDERS AND IF OPTIONAL SLAB FORMING IS USED. THESE VALUES MAY REQUIRE FIELD VERIFICATION.

TABLE OF ESTIMATED QUANTITIES

SPAN	REINF CONC SLAB	PRSTR CONC I-GIRDERS (TX54)③	CLASS "S" CONCRETE	CLASS "S" CONCRETE (SDWLK) (HPC)	REINFORCING STEEL ②
NO.	SF	LF	CY	CY	LB
1	2,400	298.00	69.8	12.2	16,755
2	4,032	753.00	119.6	20.4	28,148
TOTAL	6,432	1,051.00	189.4	32.6	44,903

② REINFORCING STEEL WEIGHT IS CALCULATED USING AN APPROXIMATE FACTOR OF 6.5 LBS PER SQ FT OF REINF CONC SLAB AND 2.2 LBS PER SQ FT OF SIDEWALK.

③ LENGTHS SHOWN ARE BOTTOM OF GIRDER FLANGE LENGTHS WITH ADJUSTMENTS MADE FOR BEAM SLOPE. SEE GIRDER LAYOUT FOR GIRDER LENGTHS.

④ SEE BRSM STANDARD FOR DETAILS & INFORMATION NOT SHOWN.

GENERAL NOTES:

1. DESIGNED ACCORDING TO AASHTO LRFD BRIDGE DESIGN SPECIFICATIONS, 5TH EDITION (2010).
2. CLASS "S" (HPC) CONCRETE STRENGTH F'C = 4,000 PSI.
3. ALL REINFORCING SHALL BE GRADE 60 AND EPOXY COATED.
4. SEE PCP OR PMDF STANDARDS FOR DETAILS AND QUANTITY ADJUSTMENTS IF EITHER OF THESE OPTIONS ARE USED.
5. SEE IGTS STANDARD FOR THICKENED SLAB END DETAILS.
6. SEE IGMS STANDARD FOR MISCELLANEOUS SLAB DETAILS.
7. SEE RAIL STANDARD FOR RAIL ANCHORAGE IN SLAB.
8. BAR LAPS, WHERE REQUIRED, TO BE AS FOLLOWS: #4 = 2'-1" #5 = 2'-7"

STATE OF TEXAS
THOMAS G. ASHCRAFT
81411
REGISTERED
PROFESSIONAL ENGINEER

7/5/12

HL 93 LOADING

CP&Y, INC.
TBPE REGISTRATION NO. F-1741

Texas Department of Transportation
© 2012

IH 35W FROM NORTH TARRANT PKWY TO IH 820

201.00' PRESTRESSED CONCRETE I-GIRDER UNIT (SPANS 1 & 2)

BASSWOOD BLVD SN TURNAROUND

IH 35W UNDERPASS

SCALE: NTS — SHEET 2 OF 2

DESIGN	FED.RD. DIV.NO.	FEDERAL AID PROJECT NO.		HIGHWAY NO.
LVA	6	(SEE TITLE SHEET)		IH 35W
GRAPHICS PMB	STATE	DISTRICT	COUNTY	SHEET NO.
CHECK LVA	TEXAS	FTW	TARRANT	1554
CHECK TGA	CONTROL 0014	SECTION 16	JOB 255, ETC.	

FILENAME: S3BBR_BBSN_PB_03.dgn
DRAWING DATE: 7/13/2012

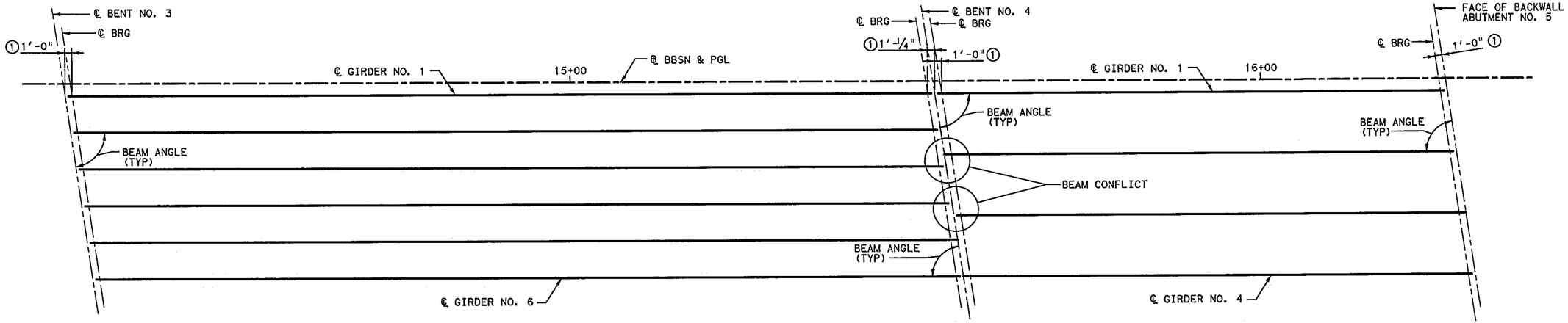

SPAN 3
(TX54 GIRDERS)

SPAN 4
(TX54 GIRDERS)

① SEE IGEB STANDARD FOR ORIENTATION OF DIMENSION.

② GIRDER LENGTHS SHOWN ARE BOTTOM GIRDER FLANGE LENGTHS WITH ADJUSTMENTS MADE FOR BEAM SLOPE.

BENT REPORT

BENT NO. 3 (N 9 1 26.42 W)
DISTANCE BETWEEN STATION LINE AND BEAM 1 1.768 R

		BEAM SPAC. (C.L. BENT)	BEAM ANGLE D M S
SPAN 3	BEAM 1	0.000	81 47 11
	BEAM 2	5.355	81 47 11
	BEAM 3	5.355	81 47 11
	BEAM 4	5.355	81 47 11
	BEAM 5	5.355	81 47 11
	BEAM 6	5.355	81 47 11
	TOTAL	26.775	

BENT NO. 4 (N 9 1 26.42 W)
DISTANCE BETWEEN STATION LINE AND BEAM 1 1.768 R

		BEAM SPAC. (C.L. BENT)	BEAM ANGLE D M S
SPAN 3	BEAM 1	0.000	81 47 11
	BEAM 2	5.355	81 47 11
	BEAM 3	5.355	81 47 11
	BEAM 4	5.355	81 47 11
	BEAM 5	5.355	81 47 11
	BEAM 6	5.355	81 47 11
	TOTAL	26.775	
SPAN 4	BEAM 1	0.000	81 47 11
	BEAM 2	8.925	81 47 11
	BEAM 3	8.925	81 47 11
	BEAM 4	8.925	81 47 11
	TOTAL	26.775	

ABUT NO. 5 (N 9 1 26.42 W)
DISTANCE BETWEEN STATION LINE AND BEAM 1 1.768 R

		BEAM SPAC. (C.L. BENT)	BEAM ANGLE D M S
SPAN 4	BEAM 1	0.000	81 47 11
	BEAM 2	8.925	81 47 11
	BEAM 3	8.925	81 47 11
	BEAM 4	8.925	81 47 11
	TOTAL	26.775	

BEAM REPORT

BEAM REPORT, SPAN 3

	HORIZONTAL DISTANCE C-C BENT	C-C BRG.	TRUE DISTANCE BOT. BM. FLG.	② BEAM SLOPE
BEAM 1	126.000	124.000	125.50	-0.0033
BEAM 2	126.000	124.000	125.50	-0.0034
BEAM 3	126.000	124.000	125.50	-0.0034
BEAM 4	126.000	124.000	125.50	-0.0035
BEAM 5	126.000	124.000	125.50	-0.0035
BEAM 6	126.000	124.000	125.50	-0.0036

BEAM REPORT, SPAN 4

	HORIZONTAL DISTANCE C-C BENT	C-C BRG.	TRUE DISTANCE BOT. BM. FLG.	② BEAM SLOPE
BEAM 1	75.000	72.990	74.50	-0.0105
BEAM 2	75.000	72.990	74.50	-0.0106
BEAM 3	75.000	72.990	74.50	-0.0107
BEAM 4	75.000	72.990	74.50	-0.0108

STATE OF TEXAS
THOMAS G. ASHCRAFT
81411
REGISTERED
PROFESSIONAL ENGINEER

7/5/12

HL 93 LOADING

CP&Y, INC.
TBPE REGISTRATION NO. F-1741

Texas Department of Transportation
© 2012

IH 35W FROM NORTH TARRANT PKWY TO IH 820

GIRDER LAYOUT (SPANS 3 & 4)

BASSWOOD BLVD SN TURNAROUND
IH 35W UNDERPASS

SCALE: NTS

SHEET 1 OF 1

DESIGN	FED.RD. DIV.NO.	FEDERAL AID PROJECT NO.		HIGHWAY NO.
LVA	6	(SEE TITLE SHEET)		IH 35W
GRAPHICS	STATE	DISTRICT	COUNTY	SHEET NO.
PMB	TEXAS	FTW	TARRANT	1555
CHECK LVA	CONTROL	SECTION	JOB	
CHECK TGA	0014	16	255, ETC.	

DRAWING DATE: 7/13/2012 FILENAME: S3BBR_BBSN_GF_02.dgn

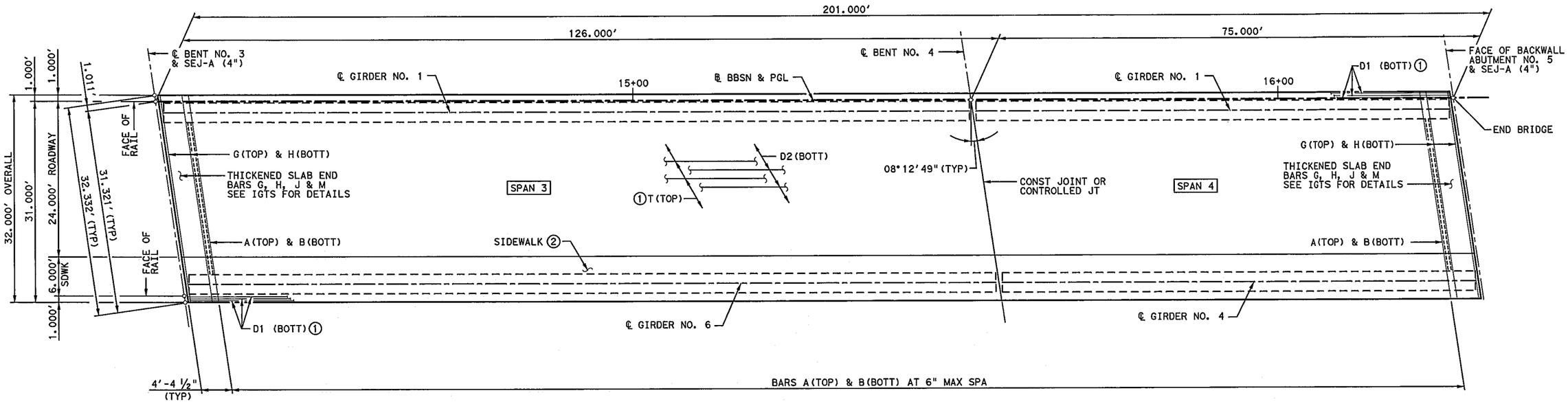

PLAN

① 2" END COVER ON BARS D1 AND T.

② SEE BRSM STANDARD FOR DETAILS & INFORMATION NOT SHOWN.

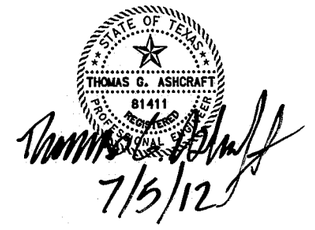

HL 93 LOADING

CP&Y, INC.
TBPE REGISTRATION NO. F-1741

Texas Department of Transportation

© 2012

IH 35W FROM NORTH TARRANT PKWY TO IH 820

201.00' PRESTRESSED CONCRETE I-GIRDER UNIT (SPANS 3 & 4)

BASSWOOD BLVD SN TURNAROUND

IH 35W UNDERPASS

SCALE: NTS

SHEET 1 OF 2

DESIGN	FED. RD. DIV. NO.	FEDERAL AID PROJECT NO.		HIGHWAY NO.
LVA	6	(SEE TITLE SHEET)		IH 35W
GRAPHICS	STATE	DISTRICT	COUNTY	SHEET NO.
PMB	TEXAS	FTW	TARRANT	
CHECK	CONTROL	SECTION	JOB	1556
LVA	0014	16	255, ETC.	
CHECK				
TGA				

DRAWING DATE: 7/13/2012 FILENAME: S3BBR_BBSN_PB_02.dgn

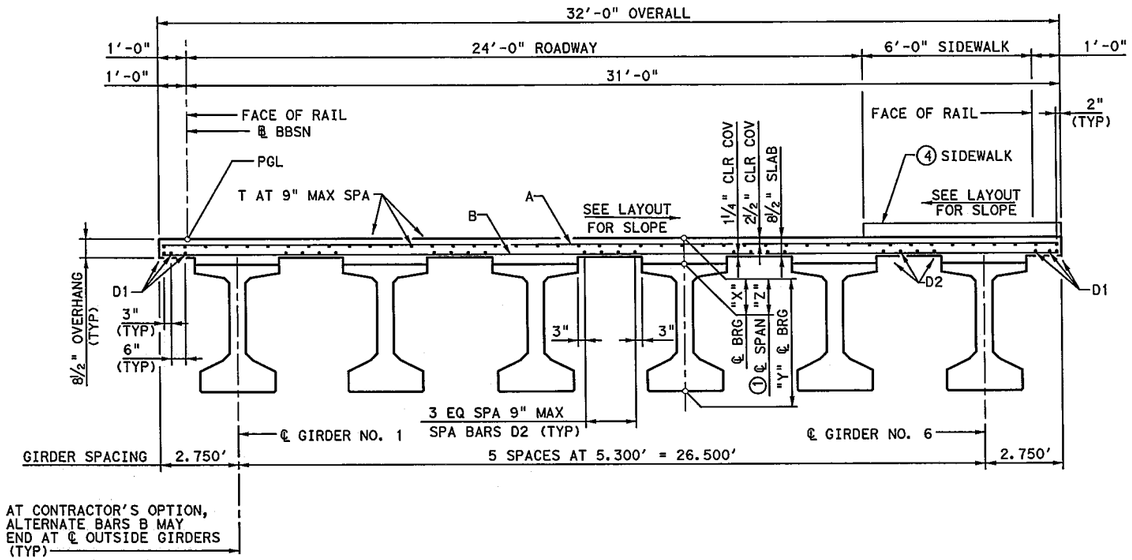

TYPICAL TRANSVERSE SECTION - SPAN 3

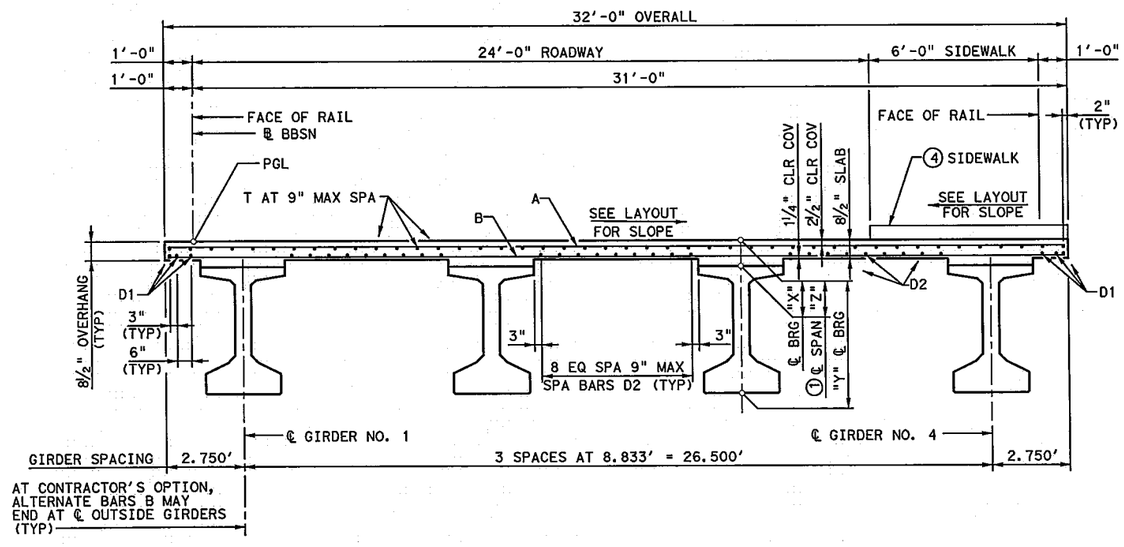

TYPICAL TRANSVERSE SECTION - SPAN 4

TABLE OF SECTION DEPTHS

SPAN NO.	GIRDER NO.	"X" AT ℄ BRG	"Y" AT ℄ BRG	"Z" AT ℄ SPAN①
3	ALL	11½"	5'-5½"	10½"
4	ALL	11½"	5'-5½"	10½"

① THEORETICAL DIMENSION

BAR TABLE

BAR	SIZE
A	#5
B	#5
D	#5
G	#5
H	#5
J	#5
M	#5
T	#4

TABLE OF ESTIMATED QUANTITIES

SPAN	REINF CONC SLAB	PRSTR CONC I-GIRDERS (TX54)③	CLASS "S" CONCRETE	CLASS "S" CONCRETE (SDWLK) (HPC)	REINFORCING STEEL ②
NO.	SF	LF	CY	CY	LB
3	4,032	753.00	119.6	20.4	28,148
4	2,400	298.00	69.8	12.2	16,755
TOTAL	6,432	1,051.00	189.4	32.6	44,903

SPAN NO.	GIRDER NO.	"A" FT	"B" FT
3	2-5	0.117	0.167
4	2-3	0.024	0.033

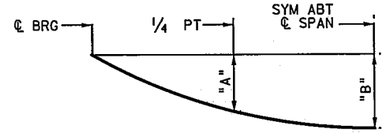

DEAD LOAD DEFLECTION DIAGRAM

CALCULATED DEFLECTIONS SHOWN ARE DUE TO THE CONCRETE SLAB ON INTERIOR GIRDERS ONLY (EC = 5000 KSI). ADJUST VALUES AS REQUIRED FOR EXTERIOR GIRDERS AND IF OPTIONAL SLAB FORMING IS USED. THESE VALUES MAY REQUIRE FIELD VERIFICATION.

② REINFORCING STEEL WEIGHT IS CALCULATED USING AN APPROXIMATE FACTOR OF 6.5 LBS PER SQ FT OF REINF CONC SLAB AND 2.2 LBS PER SQ FT OF SIDEWALK.

③ LENGTHS SHOWN ARE BOTTOM OF GIRDER FLANGE LENGTHS WITH ADJUSTMENTS MADE FOR BEAM SLOPE. SEE GIRDER LAYOUT FOR GIRDER LENGTHS.

④ SEE BRSM STANDARD FOR DETAILS & INFORMATION NOT SHOWN.

GENERAL NOTES:

1. DESIGNED ACCORDING TO AASHTO LRFD BRIDGE DESIGN SPECIFICATIONS, 5TH EDITION (2010).
2. CLASS "S" (HPC) CONCRETE STRENGTH F'C = 4,000 PSI.
3. ALL REINFORCING SHALL BE GRADE 60 AND EPOXY COATED.
4. SEE PCP OR PMDF STANDARDS FOR DETAILS AND QUANTITY ADJUSTMENTS IF EITHER OF THESE OPTIONS ARE USED.
5. SEE IGTS STANDARD FOR THICKENED SLAB END DETAILS.
6. SEE IGMS STANDARD FOR MISCELLANEOUS SLAB DETAILS.
7. SEE RAIL STANDARD FOR RAIL ANCHORAGE IN SLAB.
8. BAR LAPS, WHERE REQUIRED, TO BE AS FOLLOWS: #4 = 2'-1" #5 = 2'-7"

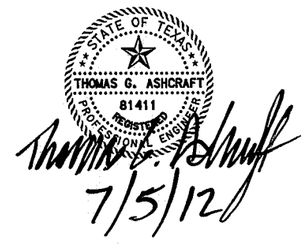

HL 93 LOADING

CP&Y, INC.
TBPE REGISTRATION NO. F-1741

Texas Department of Transportation
© 2012

IH 35W FROM NORTH TARRANT PKWY TO IH 820

201.00' PRESTRESSED CONCRETE I-GIRDER UNIT (SPANS 3 & 4)

BASSWOOD BLVD SN TURNAROUND

IH 35W UNDERPASS

SCALE: NTS — SHEET 2 OF 2

DESIGN	FED.RD. DIV.NO.	FEDERAL AID PROJECT NO.		HIGHWAY NO.
CPX	6	(SEE TITLE SHEET)		IH 35W
GRAPHICS	STATE	DISTRICT	COUNTY	SHEET NO.
CHECK: CPX	TEXAS	FTW	TARRANT	1557
CHECK: TBX	CONTROL 0014	SECTION 16	JOB 255, ETC.	

FILENAME: S3BBR_BBSN_PB_04.dgn
DRAWING DATE: 7/13/2012

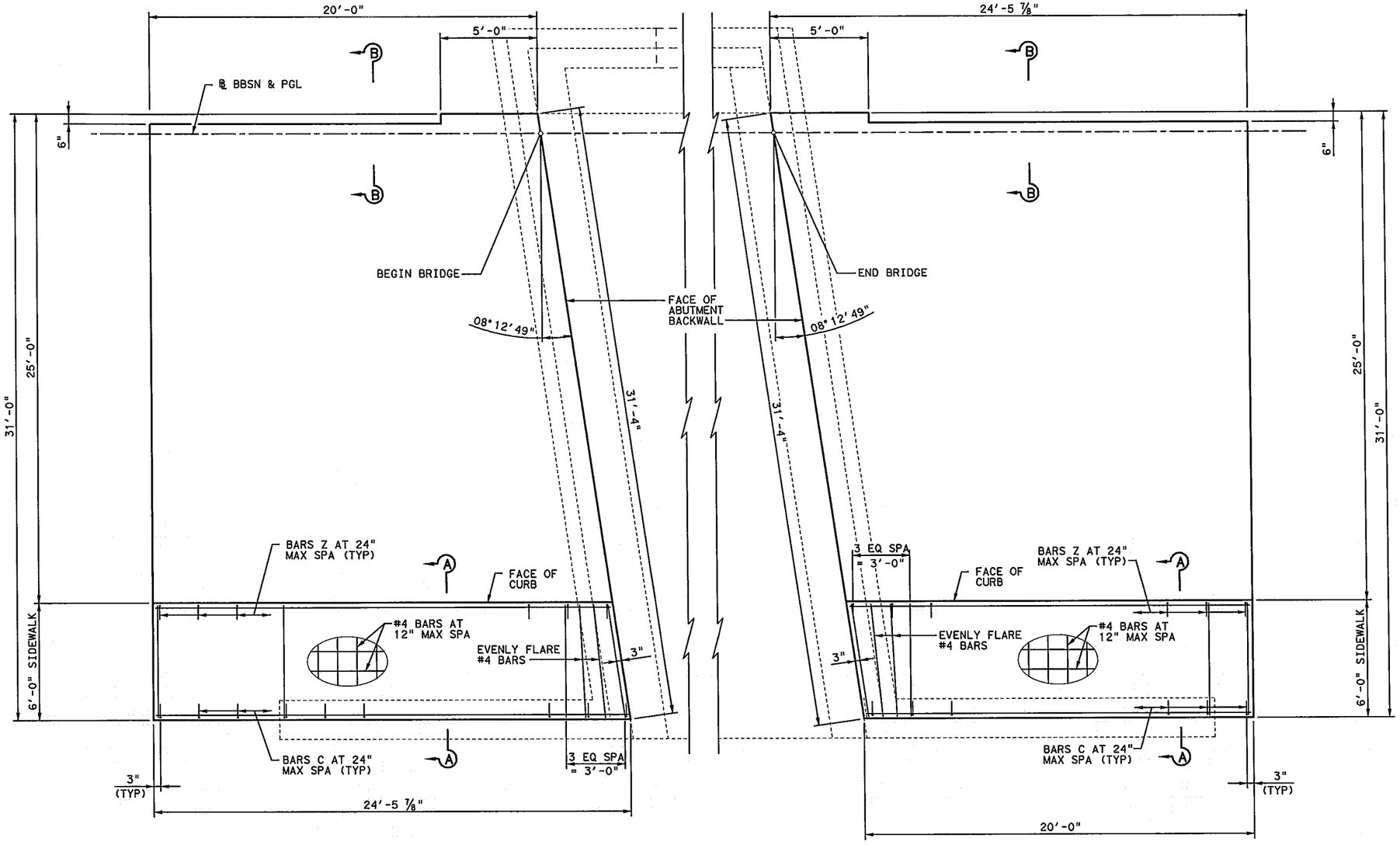

APPROACH SLAB PLAN
(ABUT NO. 1)

APPROACH SLAB PLAN
(ABUT NO. 5)

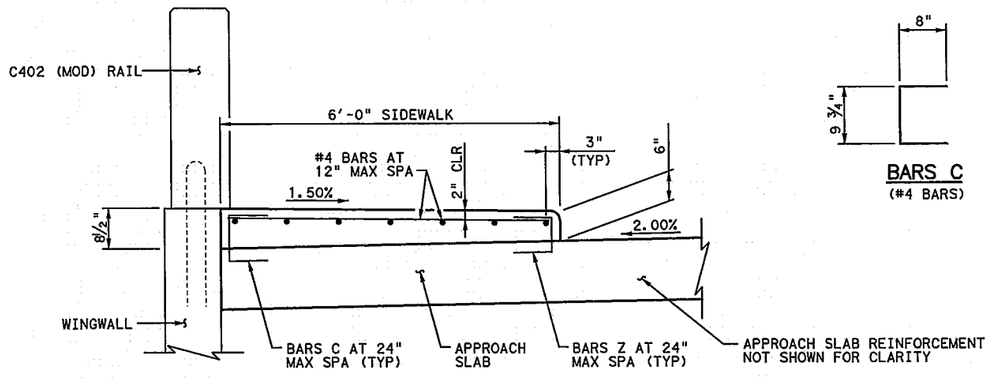

SECTION A-A

BARS C
(#4 BARS)

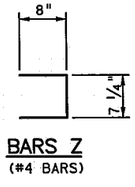

BARS Z
(#4 BARS)

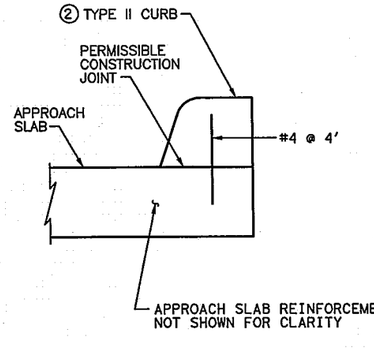

SECTION B-B

SUMMARY OF ESTIMATED QUANTITIES

ABUT NO.	CLASS "S" CONCRETE (APPR SLAB)	CLASS "S" CONCRETE (SDWLK) (HPC)	REINF STEEL①
	CY	CY	LB
1	32	2.7	6,532
2	32	3.2	6,587
TOTAL	64	5.9	13,120

① REINF. STEEL WEIGHT CALCULATED BASED ON 8.5 LB/SF FOR APPROACH SLAB, 1.6 LB/SF FOR SIDEWALK AND 18.4 LB/LF FOR SUPPORT SLAB.

② SEE CONCRETE CURB AND CURB AND GUTTER STANDARD, CC-CG (FW), FOR INFORMATION NOT SHOWN.

GENERAL NOTES:

1. DESIGNED ACCORDING TO AASHTO LRFD BRIDGE DESIGN SPECIFICATIONS, 5TH EDITION (2010).
2. CLASS "S" (HPC) CONCRETE STRENGTH F'C = 4,000 PSI.
3. ALL REINFORCING SHALL BE GRADE 60 AND EPOXY COATED.
4. SEE BAS-C STANDARD FOR INFORMATION NOT SHOWN.
5. BAR LAPS, WHERE REQUIRED, TO BE AS FOLLOWS:
   #4 = 2'-1"
   #5 = 2'-7"

STATE OF TEXAS
THOMAS G. ASHCRAFT
81411
REGISTERED
PROFESSIONAL ENGINEER

7/5/12

HL 93 LOADING

CP&Y, INC.
TBPE REGISTRATION NO. F-1741

Texas Department of Transportation
© 2012

IH 35W FROM NORTH TARRANT PKWY TO IH 820

APPROACH SLAB DETAILS

BASSWOOD BLVD SN TURNAROUND

IH 35W UNDERPASS

SCALE: VARIES — SHEET 1 OF 1

DESIGN	FED. RD. DIV. NO.	FEDERAL AID PROJECT NO.		HIGHWAY NO.
LVA	6	(SEE TITLE SHEET)		IH 35W
GRAPHICS	STATE	DISTRICT	COUNTY	SHEET NO.
GWS	TEXAS	FTW	TARRANT	
CHECK	CONTROL	SECTION	JOB	1558
LVA	0014	16	255, ETC.	
CHECK				
TGA				

FILENAME: S3BBR*BBSN*AS*01.dgn

DRAWING DATE: 7/13/2012

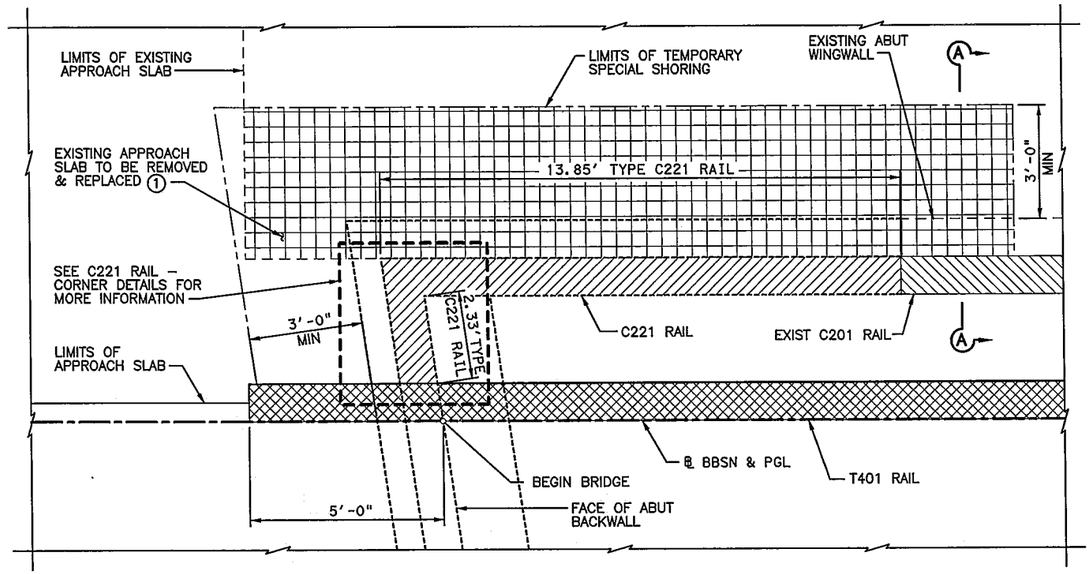

BEGIN BRIDGE PLAN
(ABUT NO. 1)

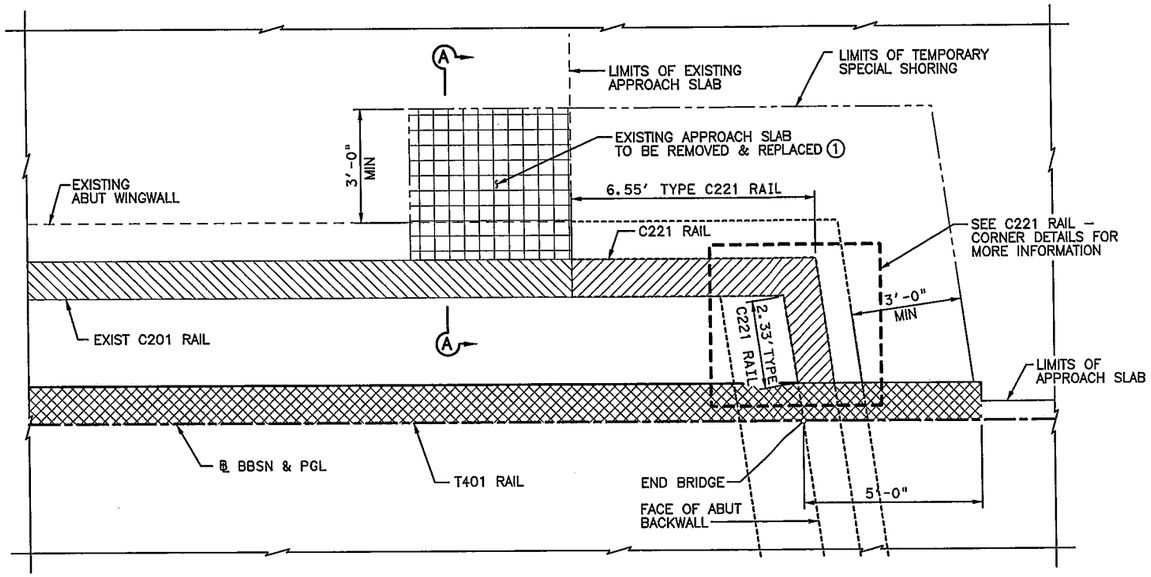

END BRIDGE PLAN
(ABUT NO. 5)

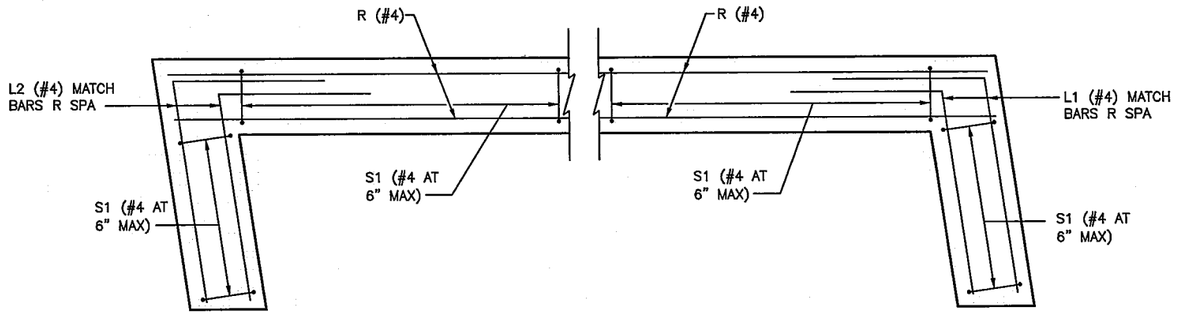

C221 RAIL - CORNER DETAILS

SEE C221 STANDARD FOR INFORMATION NOT SHOWN.

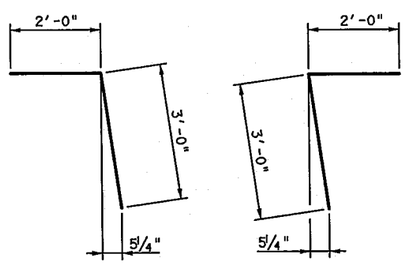

LEGEND

- C221 RAIL
- EXIST C201 RAIL
- T401 RAIL
- EXISTING APPROACH SLAB TO BE REMOVED & REPLACED

(1) EXPOSED REINFORCING TO BE CUT FLUSH WITH CONCRETE SURFACE.

(2) SEE BAS-C STANDARD FOR MORE INFORMATION.

(3) DRILL AND GROUT 1'-6" MINIMUM INTO EXISTING APPROACH SLAB. GROUT TO BE NON-SHRINK GROUT.

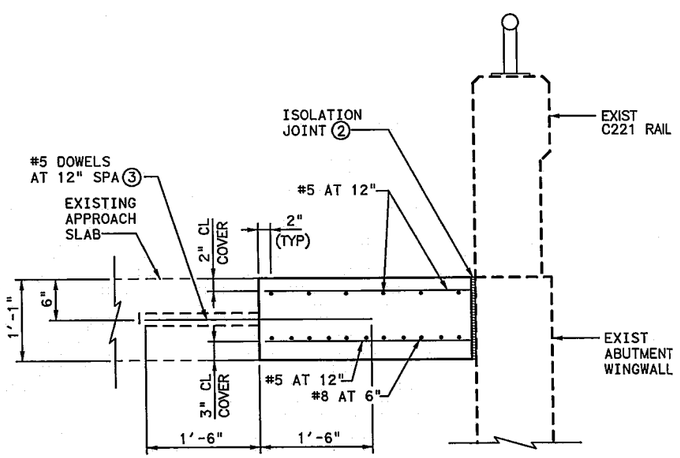

SCTION A-A

STATE OF TEXAS
THOMAS G. ASHCRAFT
81411
REGISTERED PROFESSIONAL ENGINEER
7/5/12

HL 93 LOADING

CP&Y, INC.
TBPE REGISTRATION NO. F-1741

Texas Department of Transportation
© 2012

IH 35W FROM NORTH TARRANT PKWY TO IH 820

BRIDGE END DETAILS

BASSWOOD BLVD SN TURNAROUND
IH 35W UNDERPASS

SCALE: VARIES — SHEET 1 OF 1

DESIGN	FED. RD. DIV. NO.	FEDERAL AID PROJECT NO.		HIGHWAY NO.
LVA	6	(SEE TITLE SHEET)		IH 35W
GRAPHICS	STATE	DISTRICT	COUNTY	SHEET NO.
PMB	TEXAS	FTW	TARRANT	
CHECK	CONTROL	SECTION	JOB	1559
LVA	0014	16	255, ETC.	
CHECK				
TGA				

FILENAME: S38BR_BBSN_AS_02.dgn
DRAWING DATE: 7/13/2012

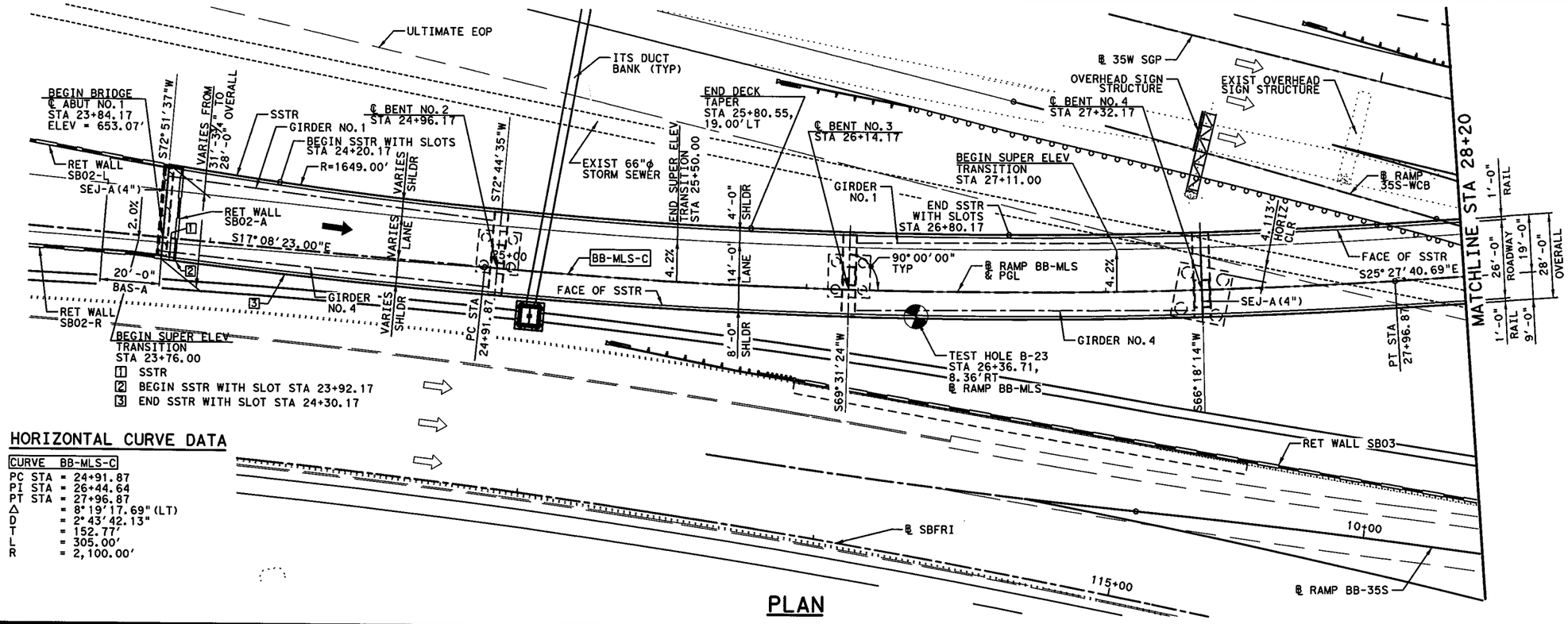

HORIZONTAL CURVE DATA

CURVE BB-MLS-C

PC STA = 24+91.87
PI STA = 26+44.64
PT STA = 27+96.87
Δ = 8° 19' 17.69" (LT)
D = 2° 43' 42.13"
T = 152.77'
L = 305.00'
R = 2,100.00'

PLAN

0' 10' 20' 40'

SCALE IN FEET

GENERAL NOTES:

1. DESIGNED IN ACCORDANCE WITH 2010 AASHTO LRFD BRIDGE DESIGN SPECIFICATIONS.
2. ALL DIMENSIONS ARE EITHER HORIZONTAL OR VERTICAL AND MUST BE CORRECTED FOR GRADE, CROWN, AND/OR SUPER-ELEVATION.
3. "D" DENOTES BENTS WITH DOWEL BARS "D" AND SLOTTED HOLES AT ENDS OF EXTERIOR GIRDERS ONLY.
4. FOR STEEL UNIT: "E" DENOTES EXPANSION BEARING, "F" DENOTES FIXED BEARING.
5. SEE "BORING LOGS - BRIDGE" SHEETS FOR GEOTECHNICAL INFORMATION.
6. FOR TYPICAL SECTIONS SEE SHEET 3 OF 3.
7. CONTRACTOR TO VERIFY LOCATION OF ALL UTILITIES PRIOR TO EXCAVATION.
8. SIDE SLOT DRAINS FOR SSTR RAIL SHALL NOT BE LOCATED WITHIN 6' OF ℄ BENT.
9. ALLOWANCE FOR FUTURE RESURFACING: 23.3 PSF.

NEW NBI = 02-220-0-0014-16-547
FUNCTIONAL CLASS = URBAN FREEWAY
DESIGN SPEED = 45 MPH
ADT = 9,200 (2030)

HL 93 LOADING

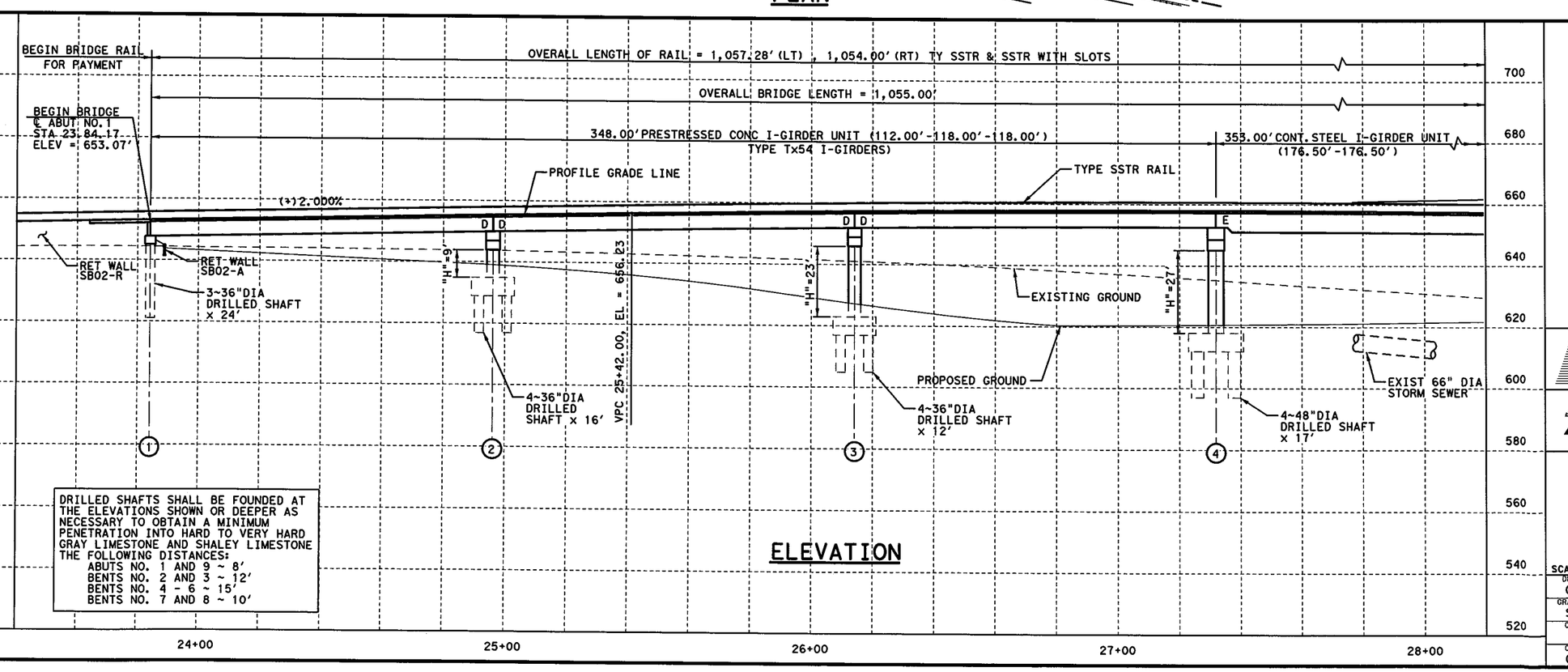

ELEVATION

DRILLED SHAFTS SHALL BE FOUNDED AT THE ELEVATIONS SHOWN OR DEEPER AS NECESSARY TO OBTAIN A MINIMUM PENETRATION INTO HARD TO VERY HARD GRAY LIMESTONE AND SHALEY LIMESTONE THE FOLLOWING DISTANCES:
ABUTS NO. 1 AND 9 ~ 8'
BENTS NO. 2 AND 3 ~ 12'
BENTS NO. 4 - 6 ~ 15'
BENTS NO. 7 AND 8 ~ 10'

7/11/12
STATE OF TEXAS
CORBETT L. FREEMAN
86913
LICENSED PROFESSIONAL ENGINEER

I. S. ENGINEERS, LLC
TBPE REG. # F-11657

Texas Department of Transportation
© 2012

IH 35W FROM NORTH TARRANT PKWY TO IH 820

BRIDGE LAYOUT

SB IH35W ENTRANCE RAMP TO MANAGED LANES

SCALE: 1" = 40' H & V — SHEET 1 OF 3

DESIGN	FED.RD. DIV.NO.	FEDERAL AID PROJECT NO.		HIGHWAY NO.
CLF	6	(SEE TITLE SHEET)		IH 35W
GRAPHICS SPL	STATE	DISTRICT	COUNTY	SHEET NO.
CHECK SB	TEXAS	FTW	TARRANT	1560
CHECK CLF	CONTROL	SECTION	JOB	
	0014	16	255, ETC.	

FILENAME: S3BBR*BB-MLS*BL*01.dgn
DRAWING DATE: 7/13/2012

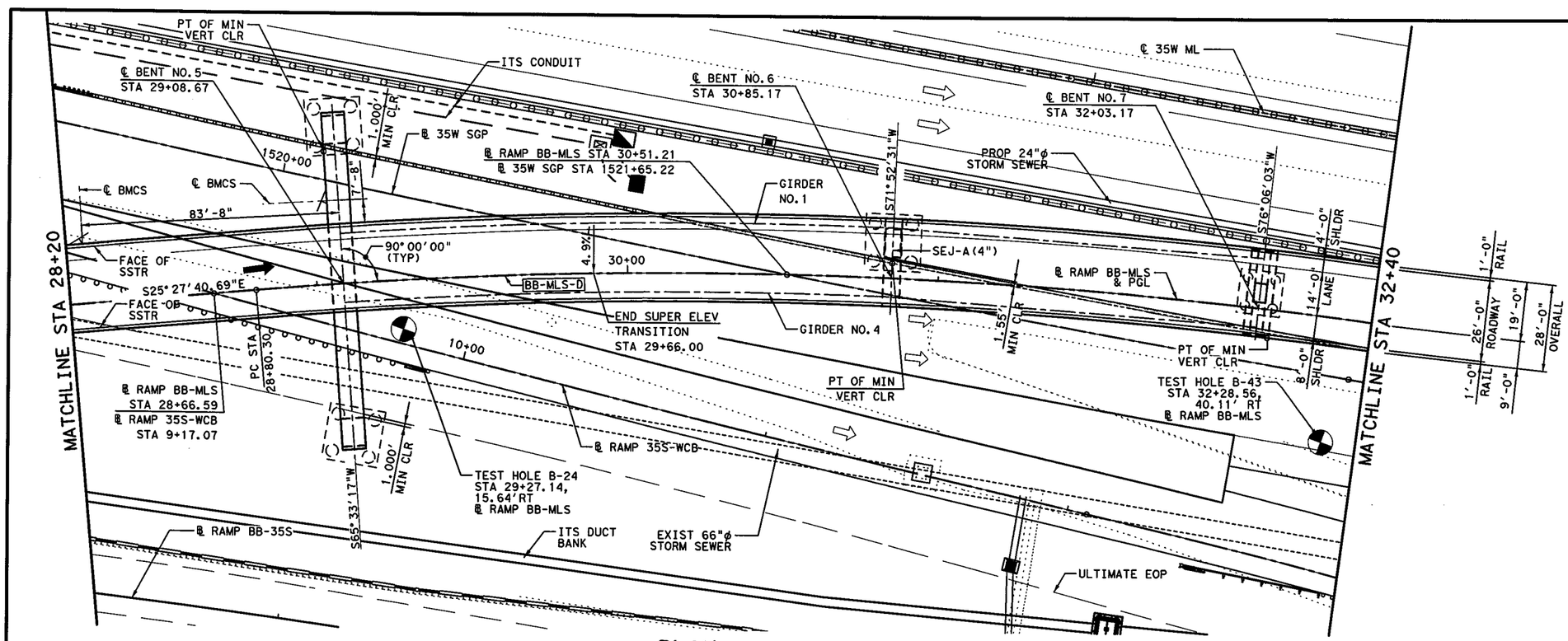

PLAN

0' 10' 20' 40'

SCALE IN FEET

NOTES:

1. FOR GENERAL NOTES, SEE SHEET 1 OF 3.
2. FOR TYPICAL SECTIONS, SEE SHEET 3 OF 3.

HORIZONTAL CURVE DATA

CURVE BB-MLS-D	
PC STA	= 28+80.30
PI STA	= 30+88.79
PT STA	= 32+94.94
△	= 14°50'54.36"(RT)
D	= 3°34'51.55"
T	= 208.49'
L	= 414.65'
R	= 1,600.00'

HL 93 LOADING

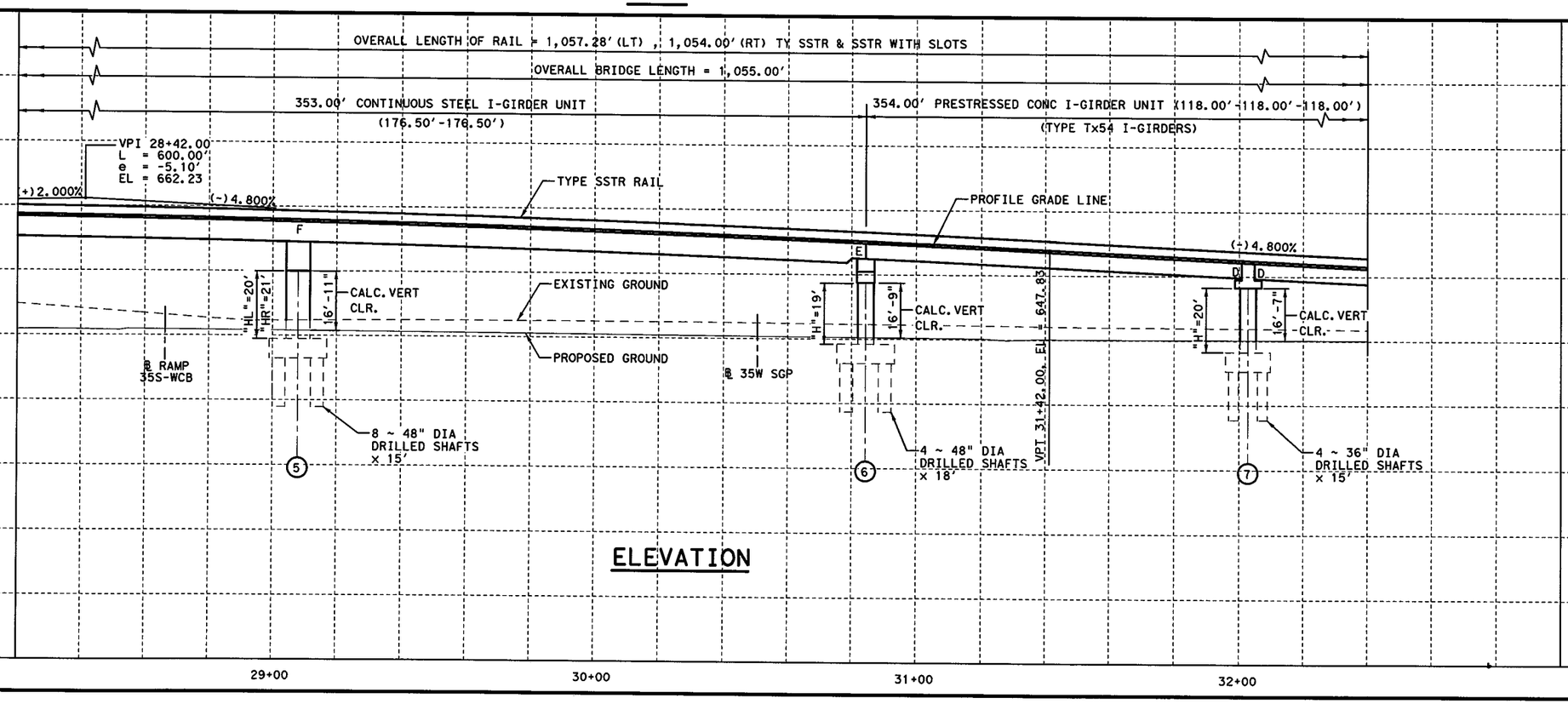

ELEVATION

7/11/12

STATE OF TEXAS
CORBETT L. FREEMAN
86913
LICENSED
PROFESSIONAL ENGINEER

I. S. ENGINEERS, LLC
TBPE REG. # F-11657

Texas Department of Transportation
© 2012

IH 35W FROM NORTH TARRANT PKWY TO IH 820

BRIDGE LAYOUT

SB IH35W ENTRANCE RAMP TO MANAGED LANES

SCALE: 1" = 40' H & V — SHEET 2 OF 3

DESIGN	FED.RD. DIV.NO.	FEDERAL AID PROJECT NO.		HIGHWAY NO.
CLF	6	(SEE TITLE SHEET)		IH 35W
GRAPHICS SPL	STATE	DISTRICT	COUNTY	SHEET NO.
CHECK SB	TEXAS	FTW	TARRANT	
CHECK CLF	CONTROL	SECTION	JOB	1561
	0014	16	255, ETC.	

FILENAME: S38BR*BB-MLS*BL*02.dgn

DRAWING DATE: 7/13/2012

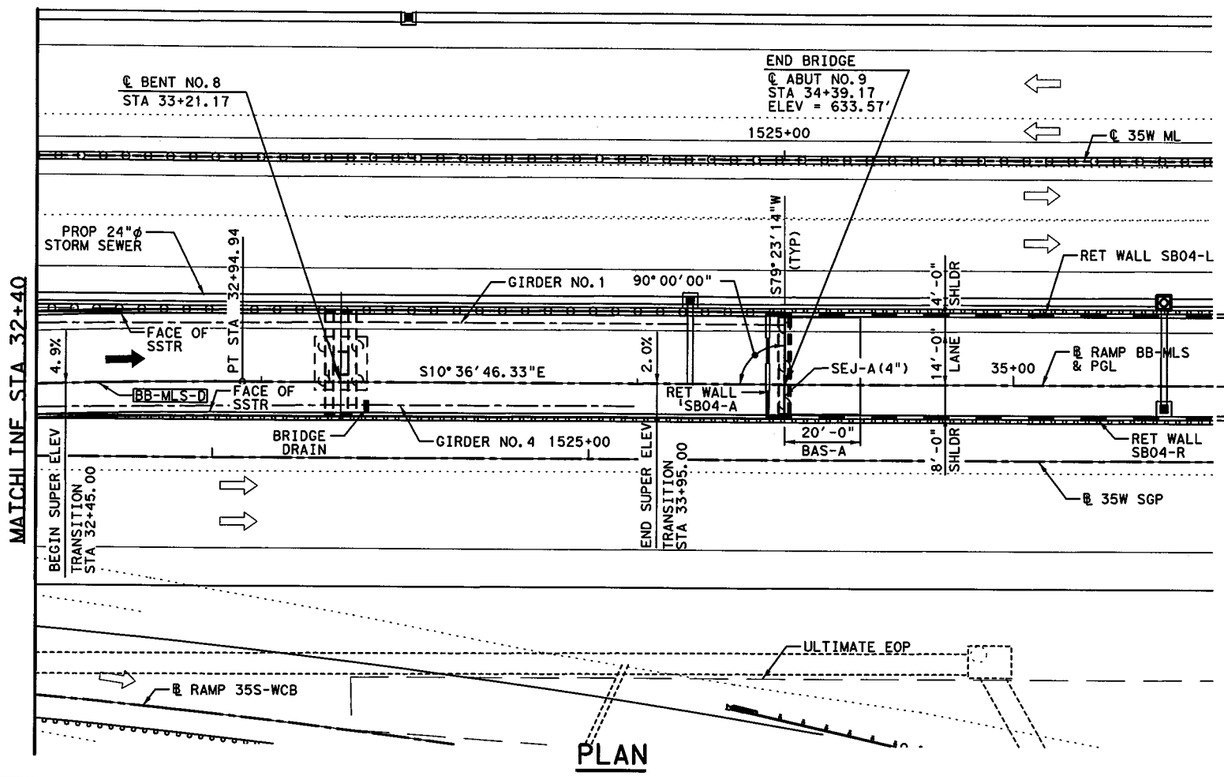

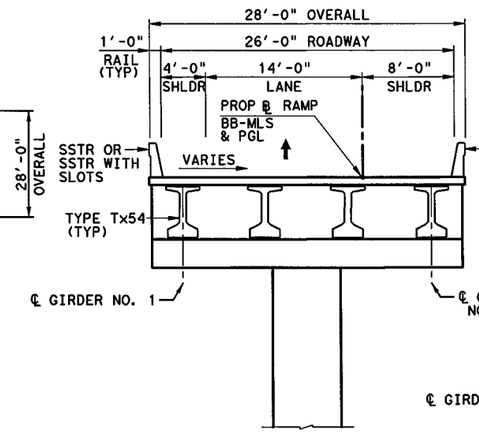

TYPICAL SECTION
SPANS 3, 6 - 8
(NTS, SHOWING BENT 7 & 8)

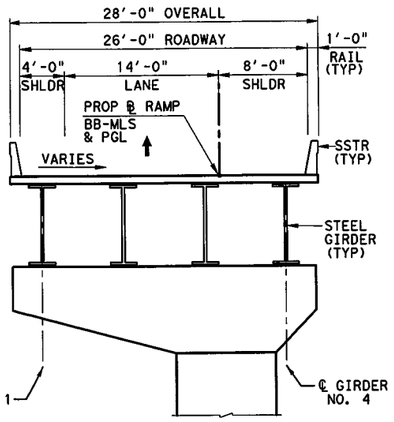

TYPICAL SECTION
SPANS 4 & 5
(NTS, SHOWING BENT 4)

NOTES:
FOR GENERAL NOTES, SEE SHEET 1 OF 3.

0' 10' 20' 40'
SCALE IN FEET

HL 93 LOADING

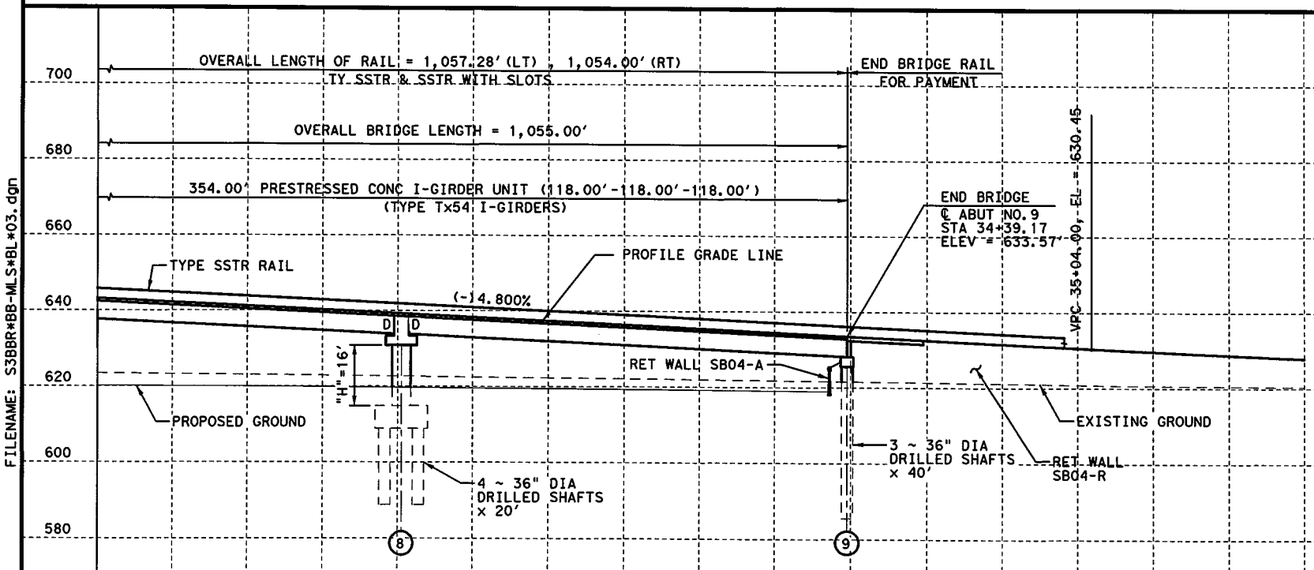

ELEVATION

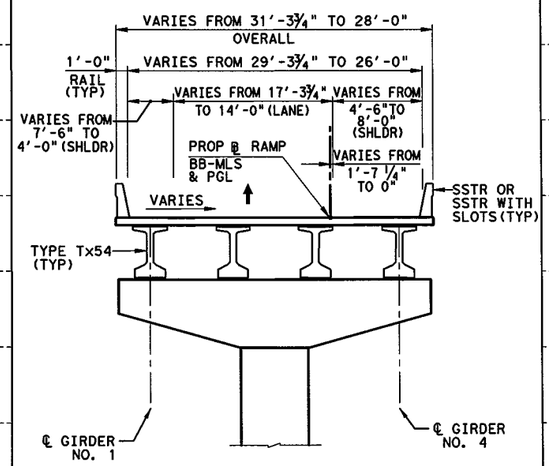

TYPICAL SECTION
SPANS 1 & 2
(NTS, SHOWING BENT 3)

7/11/12
STATE OF TEXAS
CORBETT L. FREEMAN
86913
LICENSED
PROFESSIONAL ENGINEER

I. S. ENGINEERS, LLC
TBPE REG. # F-11657

Texas Department of Transportation
© 2012

IH 35W FROM NORTH TARRANT PKWY TO IH 820

BRIDGE LAYOUT
SB IH35W ENTRANCE RAMP TO MANAGED LANES

SCALE: 1" = 40' H & V — SHEET 3 OF 3

DESIGN	FED. RD. DIV. NO.	FEDERAL AID PROJECT NO.		HIGHWAY NO.
CLF	6	(SEE TITLE SHEET)		IH 35W
GRAPHICS SPL	STATE	DISTRICT	COUNTY	SHEET NO.
CHECK SB	TEXAS	FTW	TARRANT	1562
CHECK CLF	CONTROL	SECTION	JOB	
	0014	16	255, ETC.	

FILENAME: S3BBR*BB-MLS*BL*03.dgn
DRAWING DATE: 7/13/2012

SUMMARY OF ESTIMATED QUANTITIES

BID ITEM / BID ITEM DESCRIPTION / BRIDGE ELEMENT	403 2001	416 2004	416 2006	420 2018	420 2041	420 2042	420 2092	420 2093	420 2256	420 2278	422 2003	425 2068	426 2001	428 2002
	TEMPORARY SPL SHORING	DRILL SHAFT (36 IN)	DRILL SHAFT (48 IN)	CL C CONC (MASS PLACEMENT) (FOOTING)	CL C CONC (HPC) (ABUT)	CL C CONC (HPC) (BENT)	CL C CONC (MASS PLACEMENT) (HPC) (CAP)	CL C CONC (MASS PLACEMENT) (HPC) (COLUMN)	CL S CONC (HPC) (APPR SLAB)	CL F CONC (MASS PLACEMENT) (HPC) (CAP)	REINF CONC SLAB (HPC) (CL S)	PRESTR CONC GIRDER (TX54)	POST-TENSIONING (GROUTED)	CONC SURF TREATMENT (CLASS II)
	SF	LF	LF	CY	CY	CY	CY	CY	CY	CY	SF	LF	MKF	SY
2 - ABUTMENTS		192			27.6				44					103
7 - INTERIOR BENTS	4,608	252	260	462.4		187.4	72.4	179.2		269.5			462	566
1 - 348.000' PRESTRESSED CONCRETE I-GIRDER UNIT (SPANS 1-3)											9,913	1,384.27		1008
1 - 353.000' STEEL PLATE GIRDER UNIT (SPANS 4 & 5)											9,897			1005
1 - 354.000' PRESTRESSED CONCRETE I-GIRDER UNIT (SPANS 6 - 8)											9,930	1,382.39		1008
TOTALS	4,608	444	260	462.4	27.6	187.4	72.4	179.2	44	269.5	29,740	2,766.66	462	3,690

SUMMARY OF ESTIMATED QUANTITIES

BID ITEM / BID ITEM DESCRIPTION / BRIDGE ELEMENT	432 2001	434 2041	434 2118	442 2002	442 2048	450 2102	454 2001	471 2003	481 2013	636 2001
	RIPRAP (CONC) (4 IN)	ELASTOMERIC BEAR (F9)	ELASTOMERIC BEAR (ES5)	STR STL (PLATE GIRDER)	STRUCTURAL STEEL (MISC NON-BRIDGE)	RAIL (TYPE SSTR) (HPC)	SEALED EXPANSION JOINT (4 IN) (SEJ-A)	GRATE & FRAME	PVC PIPE (SCH 40) (8")	ALUMINUM SIGNS (TY A)
	CY	EA	EA	LB	LB	LF	LF	EA	LF	SF
2 - ABUTMENTS	1						57			
7 - INTERIOR BENTS	29				209		54			14
1 - 348.000' PRESTRESSED CONCRETE I-GIRDER UNIT (SPANS 1-3)						695.0				
1 - 353.000' STEEL PLATE GIRDER UNIT (SPANS 4 & 5)		4	8	523,000	222	707.0				14
1 - 354.000' PRESTRESSED CONCRETE I-GIRDER UNIT (SPANS 6 - 8)						709.3		1	5	
TOTALS	30	4	8	523,000	431	2,111.3	111	1	5	28

BEARING SEAT ELEVATIONS

		BEAM 1	BEAM 2	BEAM 3	BEAM 4
ABUT 1	(FWD)	647.746	647.607	647.469	647.331
BENT 2	(BK)	649.250	649.416	649.580	649.745
	(FWD)	649.280	649.454	649.627	649.801
BENT 3	(BK)	651.036	651.344	651.652	651.960
	(FWD)	651.060	651.368	651.676	651.984
BENT 4	(BK)	651.765	652.021	652.276	652.532
	(FWD)	651.353	651.603	651.853	652.104
BENT 5		648.550	648.406	648.199	647.973
BENT 6	(BK)	645.118	644.758	644.399	644.040
	(FWD)	645.466	645.107	644.747	644.388
BENT 7	(BK)	640.166	639.807	639.449	639.090
	(FWD)	639.881	639.521	639.161	638.801
BENT 8	(BK)	634.270	634.014	633.759	633.503
	(FWD)	633.939	633.692	633.445	633.198
ABUT 9	(BK)	628.249	628.102	627.956	627.809

7/11/17

STATE OF TEXAS
CORBETT L. FREEMAN
86913
LICENSED
PROFESSIONAL ENGINEER

I. S. ENGINEERS, LLC
TBPE REG. # F-11657

Texas Department of Transportation
© 2012

IH 35W FROM NORTH TARRANT PKWY TO IH 820

EST. QUANTITIES AND BEARING SEAT ELEV.

SB IH35W ENTRANCE RAMP TO MANAGED LANES

SCALE: NTS — SHEET 1 OF 1

DESIGN	FED.RD. DIV.NO.	FEDERAL AID PROJECT NO.		HIGHWAY NO.
CLF	6	(SEE TITLE SHEET)		IH 35W
GRAPHICS	STATE	DISTRICT	COUNTY	SHEET NO.
CLF	TEXAS	FTW	TARRANT	
CHECK	CONTROL	SECTION	JOB	1563
AXD/SB	0014	16	255, ETC.	
CHECK				
CLF				

DRAWING DATE: 7/13/2012 FILENAME: S3BBR*BB-MLS*EQ*01.dgn

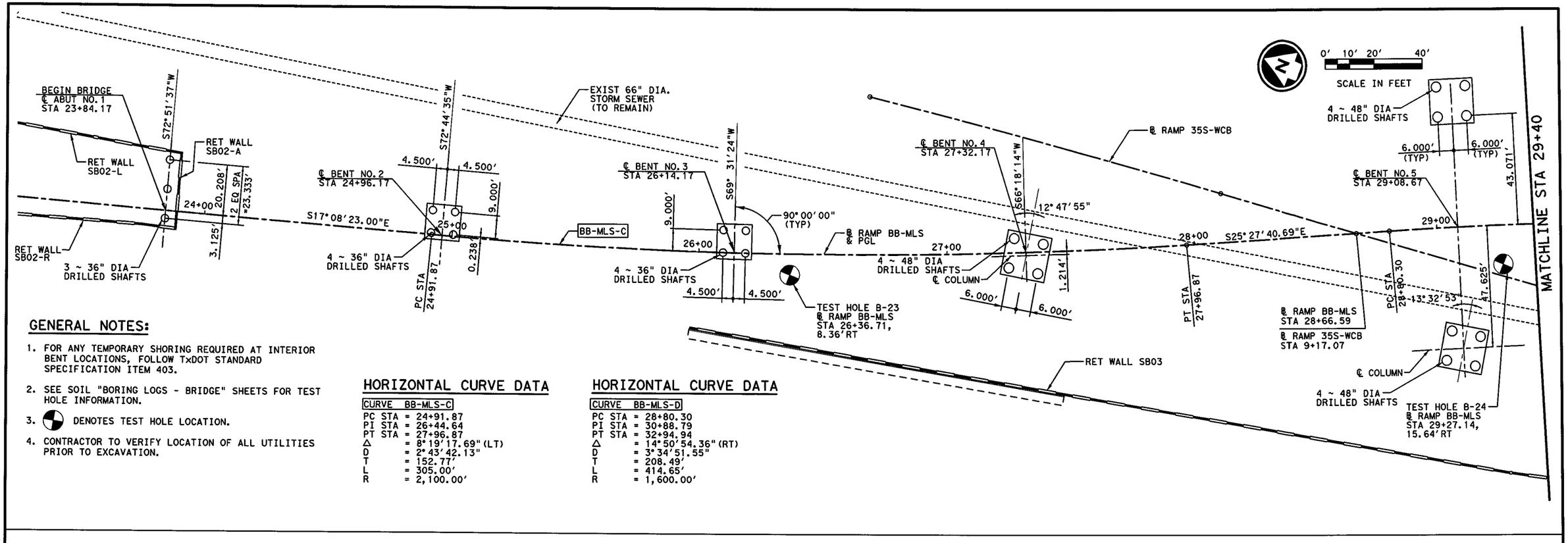

GENERAL NOTES:

1. FOR ANY TEMPORARY SHORING REQUIRED AT INTERIOR BENT LOCATIONS, FOLLOW TxDOT STANDARD SPECIFICATION ITEM 403.
2. SEE SOIL "BORING LOGS - BRIDGE" SHEETS FOR TEST HOLE INFORMATION.
3. ⊕ DENOTES TEST HOLE LOCATION.
4. CONTRACTOR TO VERIFY LOCATION OF ALL UTILITIES PRIOR TO EXCAVATION.

HORIZONTAL CURVE DATA

CURVE	BB-MLS-C
PC STA	= 24+91.87
PI STA	= 26+44.64
PT STA	= 27+96.87
Δ	= 8° 19' 17.69" (LT)
D	= 2° 43' 42.13"
T	= 152.77'
L	= 305.00'
R	= 2,100.00'

HORIZONTAL CURVE DATA

CURVE	BB-MLS-D
PC STA	= 28+80.30
PI STA	= 30+88.79
PT STA	= 32+94.94
Δ	= 14° 50' 54.36" (RT)
D	= 3° 34' 51.55"
T	= 208.49'
L	= 414.65'
R	= 1,600.00'

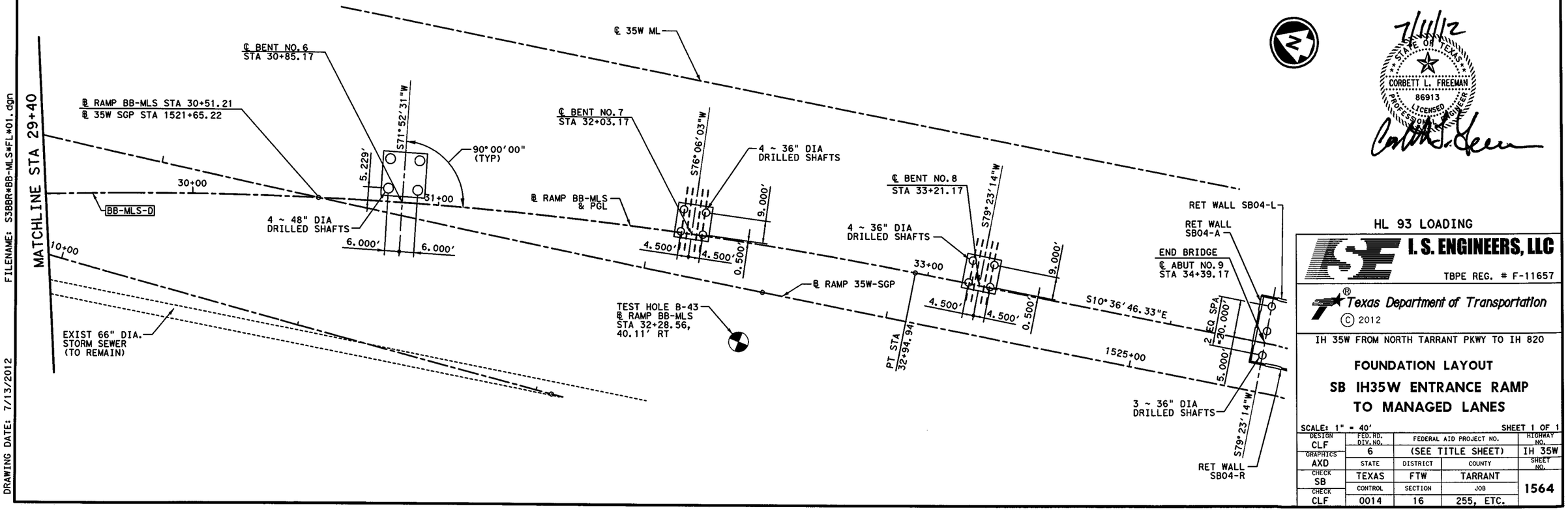

HL 93 LOADING

7/11/12
STATE OF TEXAS
CORBETT L. FREEMAN
86913
LICENSED
PROFESSIONAL ENGINEER

I. S. ENGINEERS, LLC
TBPE REG. # F-11657

Texas Department of Transportation
© 2012

IH 35W FROM NORTH TARRANT PKWY TO IH 820

FOUNDATION LAYOUT
SB IH35W ENTRANCE RAMP TO MANAGED LANES

SCALE: 1" = 40' SHEET 1 OF 1

DESIGN	FED. RD. DIV. NO.	FEDERAL AID PROJECT NO.		HIGHWAY NO.
CLF	6	(SEE TITLE SHEET)		IH 35W
GRAPHICS AXD	STATE	DISTRICT	COUNTY	SHEET NO.
CHECK SB	TEXAS	FTW	TARRANT	1564
CHECK CLF	CONTROL	SECTION	JOB	
	0014	16	255, ETC.	

FILENAME: S38BR*BB-MLS*FL*01.dgn
DRAWING DATE: 7/13/2012

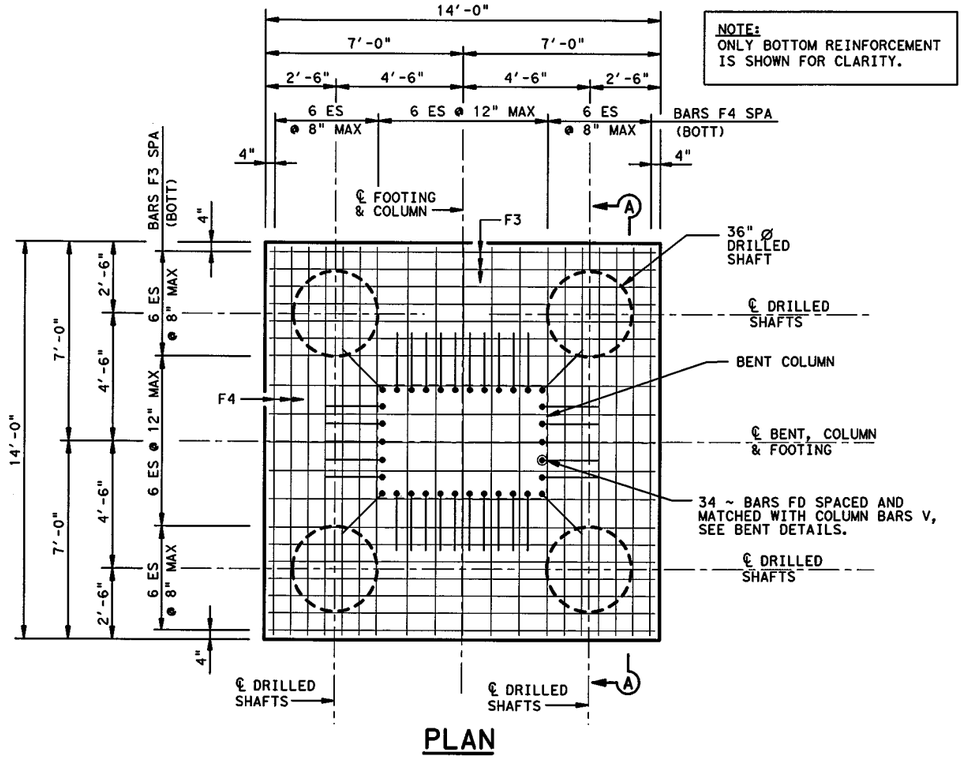

PLAN

NOTE:
ONLY BOTTOM REINFORCEMENT IS SHOWN FOR CLARITY.

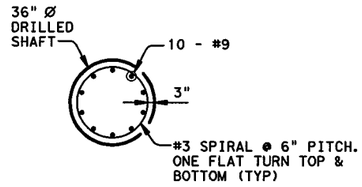

SECTION B-B

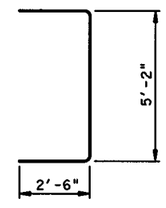

BARS U

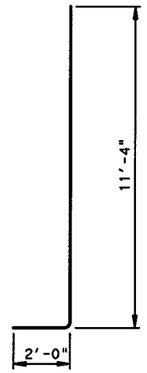

BARS FD

TABLE OF QUANTITIES (ONE FOOTING)

BAR	No.	SIZE	LENGTH	WEIGHT
F1	15	#6	13'- 8"	308
F2	15	#6	13'- 8"	308
F3	31	#11	13'- 8"	2,251
F4	31	#11	13'- 8"	2,251
FD	34	#11	13'- 4"	2,409
T1	10	#7	13'- 8"	279
T2	10	#7	13'- 8"	279
U	30	#6	10'- 2"	458
REINFORCING STEEL*			LB	8,543
CL C CONC (FOOTING) (MASS)			CY	43.6
RIPRAP (CONC) (4 IN)			CY	2.8

* FOR CONTRACTOR'S INFORMATION ONLY.

NOTES:

DESIGNED FOR HL93 LOADING IN ACCORDANCE WITH CURRENT AASHTO LRFD SPECIFICATIONS AND INTERIMS.

ALL REINFORCING STEEL SHALL BE GRADE 60.

ALL CAST-IN-PLACE CONCRETE SHALL BE CLASS "C" f'c = 3,600 psi.

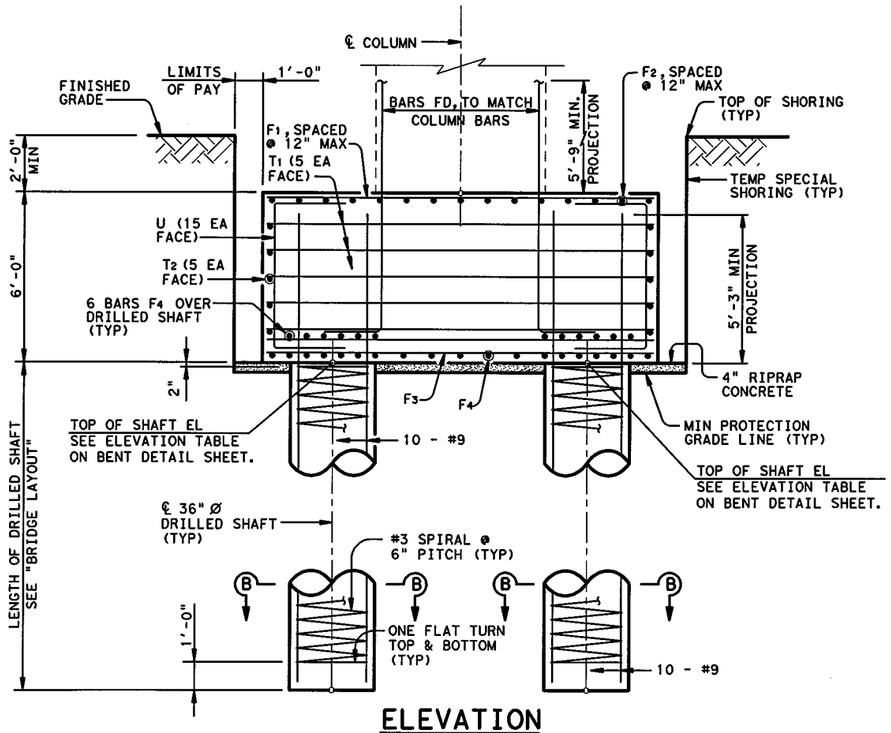

ELEVATION

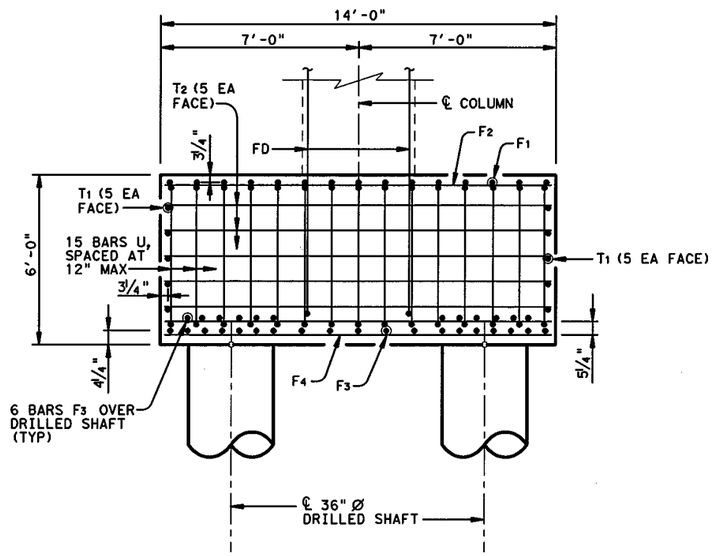

SECTION A-A

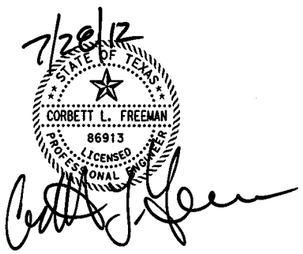

HL 93 LOADING

I. S. ENGINEERS, LLC
TBPE REG. # F-11657

Texas Department of Transportation
© 2012

IH 35W FROM NORTH TARRANT PKWY TO IH 820

FOOTING DETAILS-BENTS 2, 3, 7 & 8
SB IH35W ENTRANCE RAMP TO MANAGED LANES

SCALE: NTS — SHEET 1 OF 1

DESIGN	FED.RD. DIV.NO.	FEDERAL AID PROJECT NO.		HIGHWAY NO.
CLF	6	(SEE TITLE SHEET)		IH 35W
GRAPHICS AXD	STATE	DISTRICT	COUNTY	SHEET NO.
CHECK SB	TEXAS	FTW	TARRANT	1565
CHECK CLF	CONTROL 0014	SECTION 16	JOB 255, ETC.	

DRAWING DATE: 7/28/2012 FILENAME: S3BBR*BB-MLS*FD*01.dgn

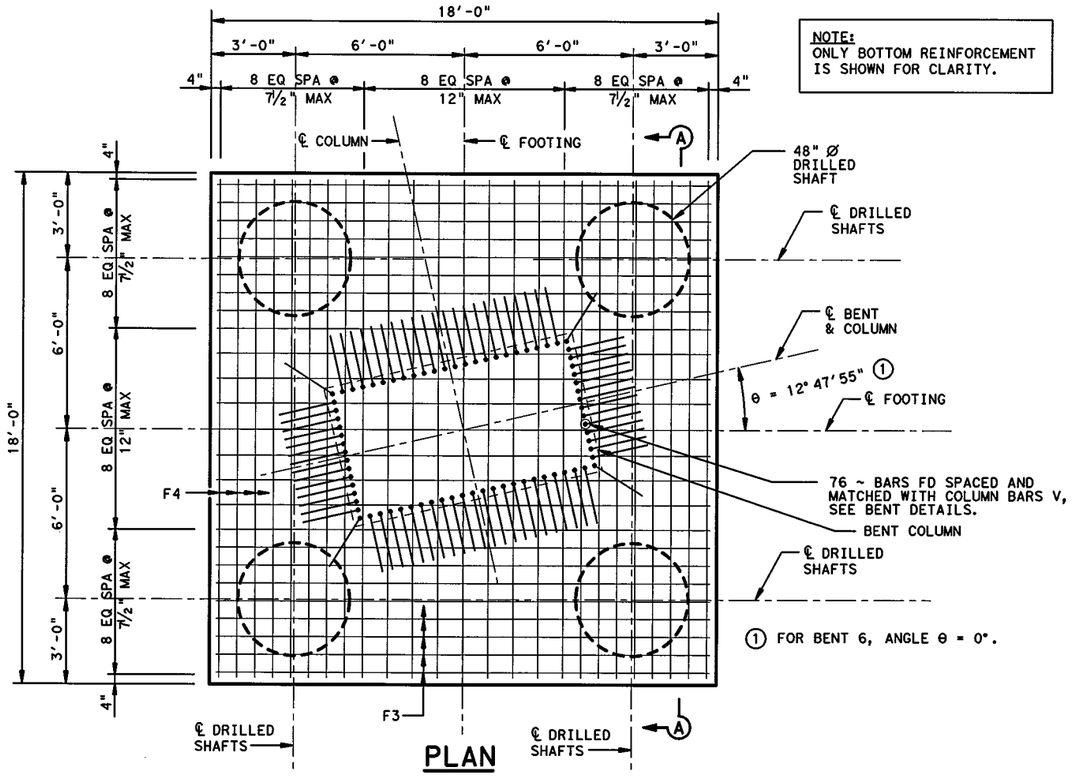

PLAN
(BENT 4 SHOWN)

NOTE:
ONLY BOTTOM REINFORCEMENT IS SHOWN FOR CLARITY.

① FOR BENT 6, ANGLE θ = 0°.

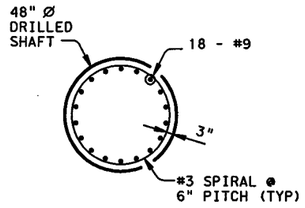

SECTION B-B

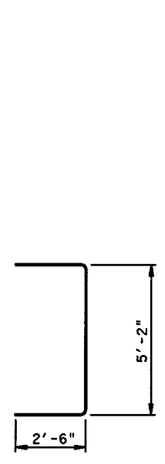

BARS U

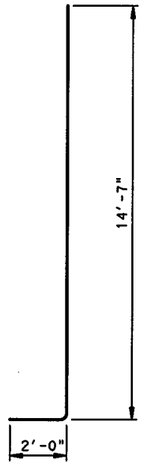

BARS FD

TABLE OF QUANTITIES (ONE FOOTING)

BAR	No.	SIZE	LENGTH	WEIGHT
F1	19	#6	17'- 8"	504
F2	19	#6	17'- 8"	504
F3	41	#11	17'- 8"	3,848
F4	41	#11	17'- 8"	3,848
FD	76	#11	16'- 7"	6,696
T1	10	#7	17'- 8"	361
T2	10	#7	17'- 8"	361
U	38	#6	10'- 2"	580
REINFORCING STEEL *			LB	16,702
CL C CONC (FOOTING) (MASS)			CY	72.0
RIPRAP (CONC) (4 IN)			CY	4.3

* FOR CONTRACTOR'S INFORMATION ONLY.

NOTES:

DESIGNED FOR HL93 LOADING IN ACCORDANCE WITH CURRENT AASHTO LRFD SPECIFICATIONS AND INTERIMS.

ALL REINFORCING STEEL SHALL BE GRADE 60.

ALL CAST-IN-PLACE CONCRETE SHALL BE CLASS "C" f'c = 3,600 psi.

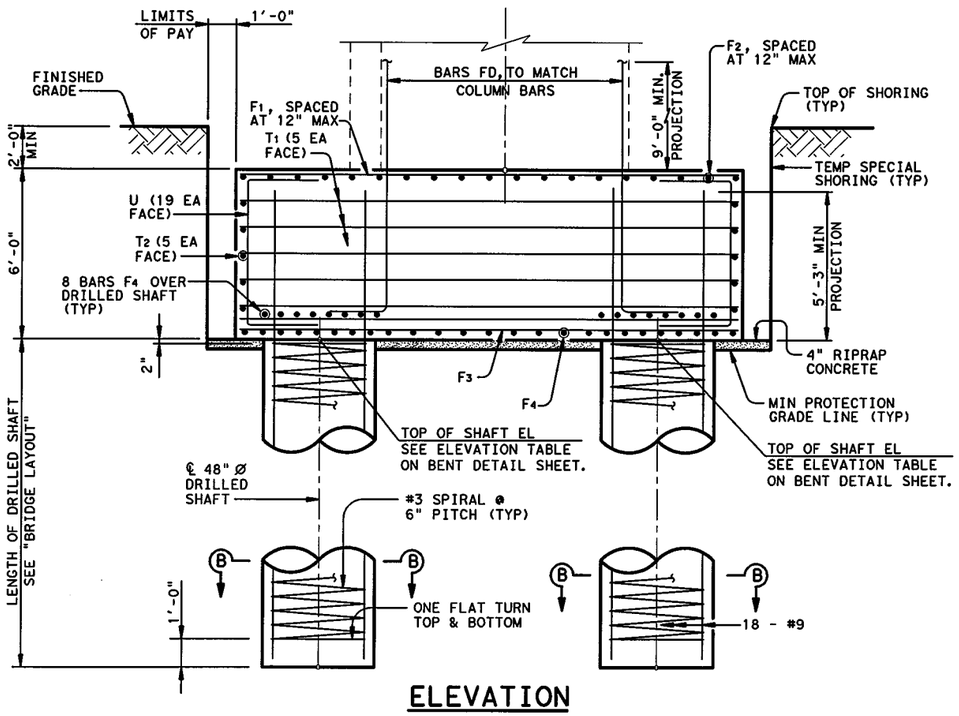

ELEVATION

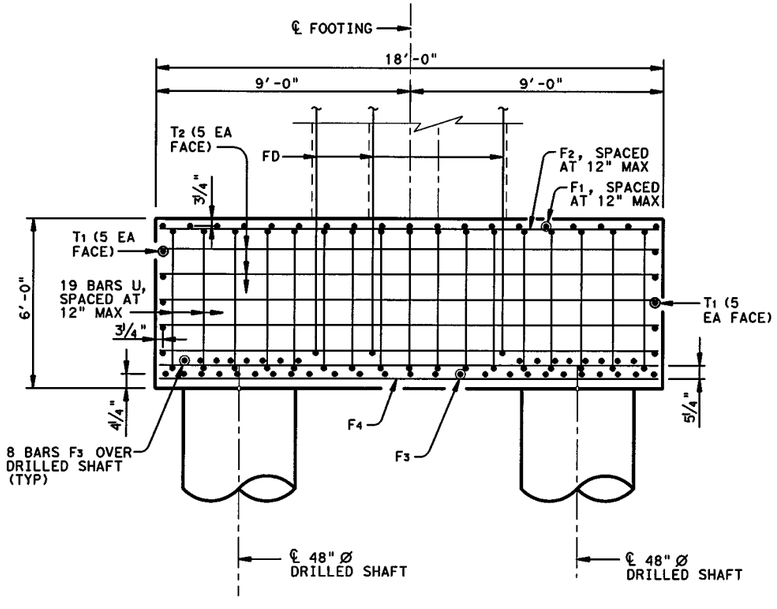

SECTION A-A

7/28/12

STATE OF TEXAS
CORBETT L. FREEMAN
86913
LICENSED
PROFESSIONAL ENGINEER

HL 93 LOADING

I. S. ENGINEERS, LLC
TBPE REG. # F-11657

Texas Department of Transportation
© 2012

IH 35W FROM NORTH TARRANT PKWY TO IH 820

FOOTING DETAILS - BENTS 4 & 6
SB IH35W ENTRANCE RAMP TO MANAGED LANES

SCALE: NTS — SHEET 1 OF 1

DESIGN	FED.RD. DIV.NO.	FEDERAL AID PROJECT NO.		HIGHWAY NO.
CLF	6	(SEE TITLE SHEET)		IH 35W
GRAPHICS AXD	STATE	DISTRICT	COUNTY	SHEET NO.
CHECK SB	TEXAS	FTW	TARRANT	1566
CHECK CLF	CONTROL	SECTION	JOB	
	0014	16	255, ETC.	

DRAWING DATE: 7/28/2012 FILENAME: S38BR*BB-MLS*FD*02.dgn

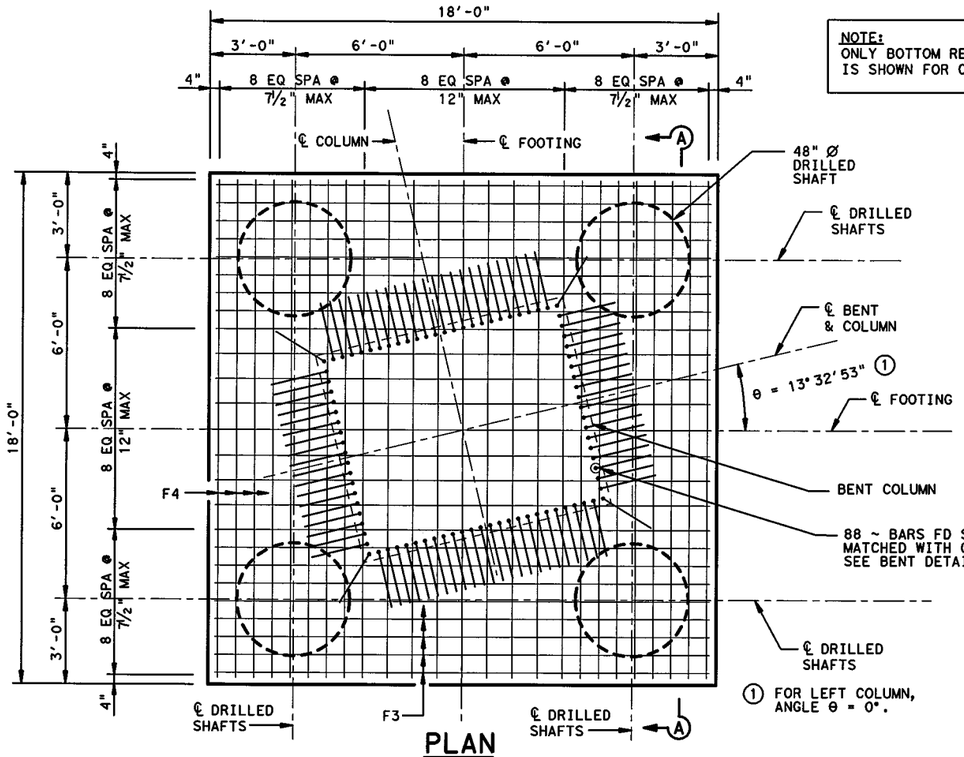

PLAN
(RIGHT COLUMN SHOWN)

NOTE:
ONLY BOTTOM REINFORCEMENT IS SHOWN FOR CLARITY.

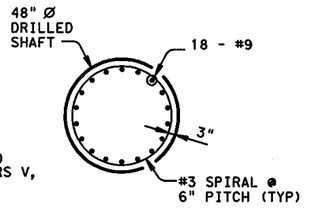

SECTION B-B

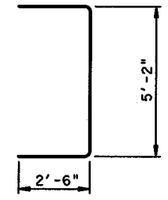

BARS U

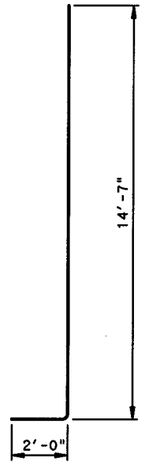

BARS FD

TABLE OF QUANTITIES (ONE FOOTING)

BAR	No.	SIZE	LENGTH	WEIGHT
F1	19	#6	17'- 8"	504
F2	19	#6	17'- 8"	504
F3	41	#11	17'- 8"	3,848
F4	41	#11	17'- 8"	3,848
FD	88	#11	16'- 7"	7,753
T1	10	#7	17'- 8"	361
T2	10	#7	17'- 8"	361
U	38	#6	10'- 2"	580
REINFORCING STEEL*			LB	17,759
CL C CONC (FOOTING) (MASS)			CY	72.0
RIPRAP (CONC) (4 IN)			CY	4.3

* FOR CONTRACTOR'S INFORMATION ONLY.

NOTES:

DESIGNED FOR HL93 LOADING IN ACCORDANCE WITH CURRENT AASHTO LRFD SPECIFICATIONS AND INTERIMS.

ALL REINFORCING STEEL SHALL BE GRADE 60.

ALL CAST-IN-PLACE CONCRETE SHALL BE CLASS "C" f'c = 3,600 psi.

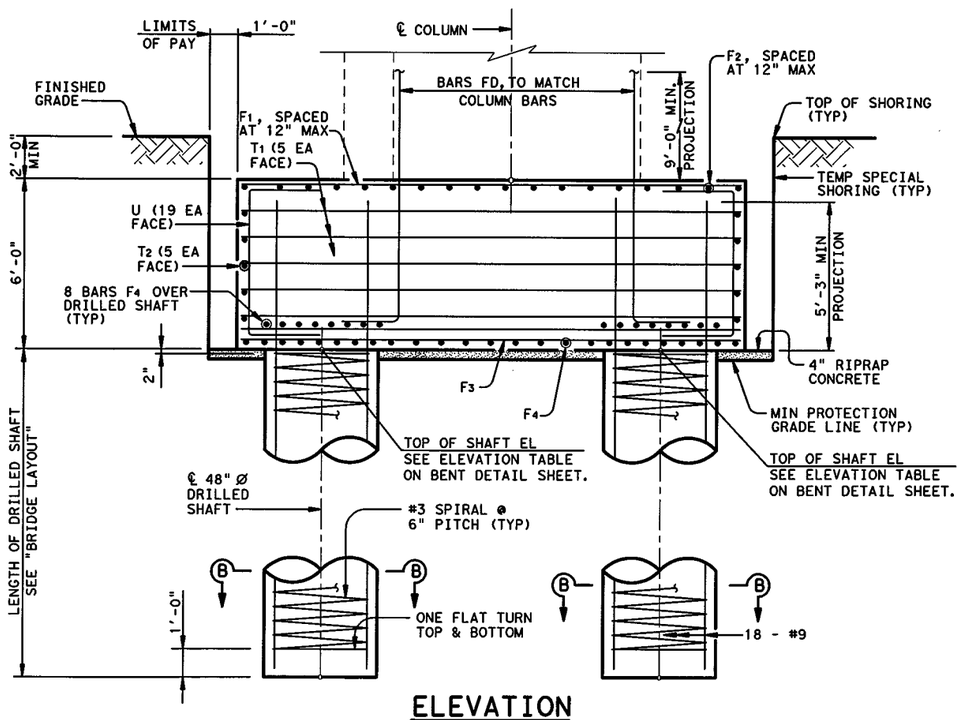

ELEVATION

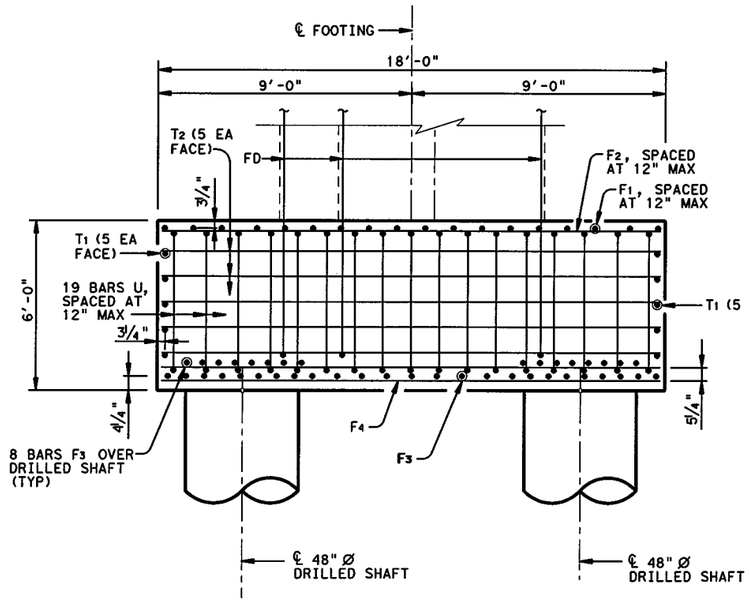

SECTION A-A

7/28/12
STATE OF TEXAS
CORBETT L. FREEMAN
86913
LICENSED PROFESSIONAL ENGINEER

HL 93 LOADING

I. S. ENGINEERS, LLC
TBPE REG. # F-11657

Texas Department of Transportation
© 2012

IH 35W FROM NORTH TARRANT PKWY TO IH 820

FOOTING DETAILS - BENT 5
SB IH35W ENTRANCE RAMP TO MANAGED LANES

SCALE: NTS — SHEET 1 OF 1

DESIGN	FED.RD. DIV.NO.	FEDERAL AID PROJECT NO.		HIGHWAY NO.
CLF	6	(SEE TITLE SHEET)		IH 35W
GRAPHICS AXD	STATE	DISTRICT	COUNTY	SHEET NO.
CHECK SB	TEXAS	FTW	TARRANT	1567
CHECK CLF	CONTROL	SECTION	JOB	
	0014	16	255, ETC.	

FILENAME: S3BBR*BB-MLS*FD*03.dgn
DRAWING DATE: 7/28/2012

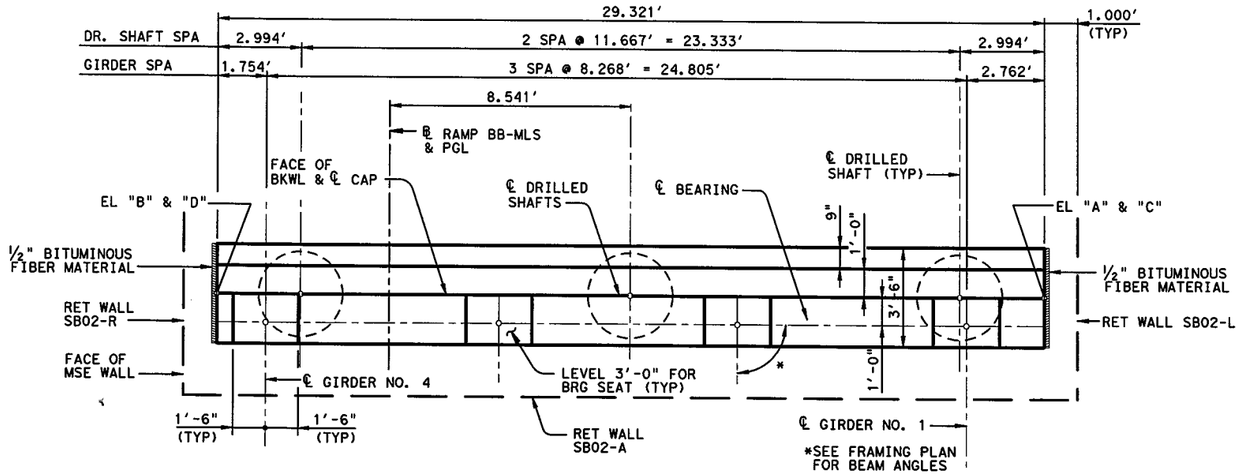

PLAN

SEE LAYOUT FOR SLOPE

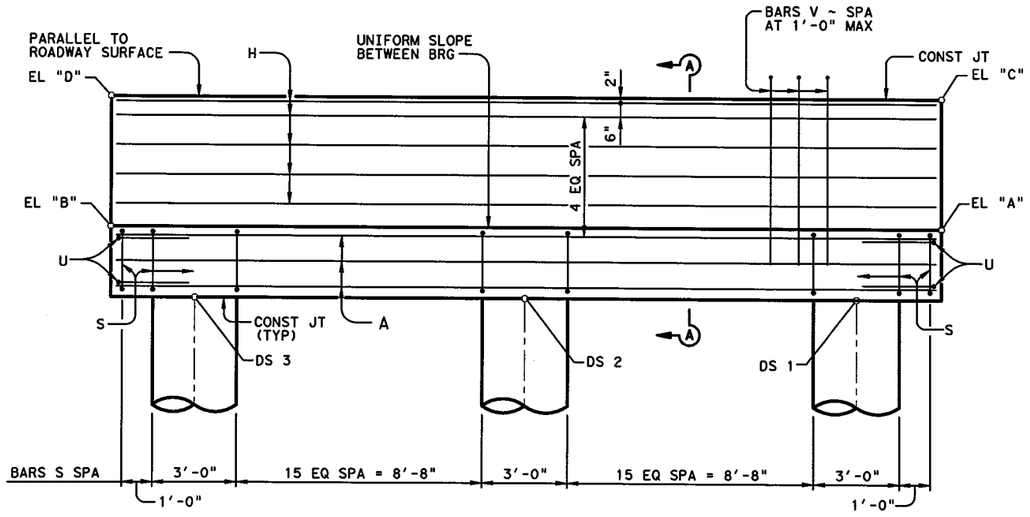

ELEVATION

TABLE OF ELEVATIONS				
CAP	"A"	"B"	"C"	"D"
	647.667	647.177	652.396	651.906
DRILL SHAFT	DS 1	DS 2	DS 3	
	645.117	644.922	644.727	
DS TIP	621.117	620.922	620.727	
AS-BUILT DS TIP				

NOTES:

DESIGNED ACCORDING TO AASHTO LRFD SPECIFICATIONS, 5TH EDITION (2010).

CLASS"C"(HPC) CONCRETE STRENGTH F'C = 3,600 PSI.

ALL CAP AND WALL REINFORCING SHALL BE GRADE 60.

SEE FD STANDARD FOR ALL FOUNDATION DETAILS AND NOTES.

CALCULATED FOUNDATION LOADS:
CAP DRILLED SHAFTS = 188 TONS/D.S.

TABLE OF ESTIMATED QUANTITIES				
BAR	NO.	SIZE	LENGTH	WEIGHT
A	11	#11	29'-0'	1,695
H	10	#5	29'-0'	302
S	36	#5	11'-4"	426
U	4	#6	8'-0"	48
V	30	#5	14'-2"	443
REINFORCING STEEL			LBS	2,914
CLASS "C" CONCRETE (ABUT)			CY	14.6

(1) INCREASE AS REQUIRED TO MAINTAIN 3¾" FROM FINISHED GRADE.

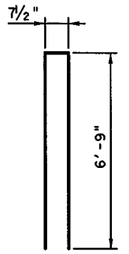

BARS V

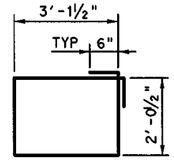

BARS S

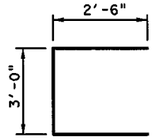

BARS U

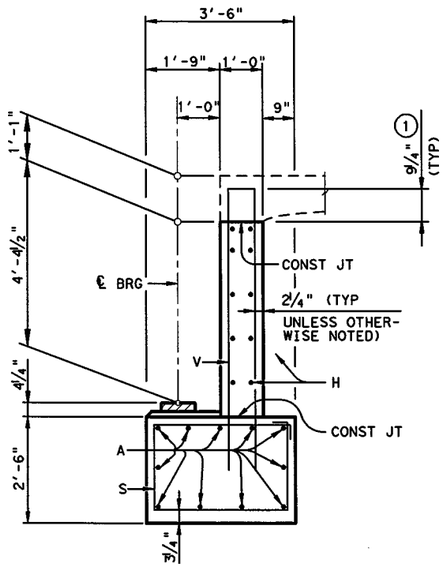

SECTION A-A

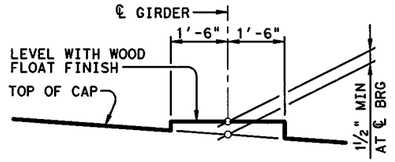

BEARING SEAT DETAIL

(BEARING SURFACE SHALL BE CLEAN AND FREE OF ALL LOOSE MATERIAL BEFORE PLACING BEARING PAD.)

THE FRONT AND BACK, BACKWALL FACES, SIDES, AND TOP, EXCEPT UNDER BEARING AREAS, SHALL BE TREATED WITH A "CLASS II, TYPE I PENETRATING CONCRETE SURFACE TREATMENT".

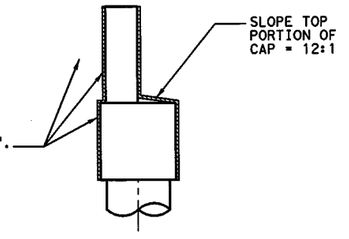

CONCRETE SURFACE TREATMENT DETAIL FOR ABUTMENT

7/11/12

STATE OF TEXAS
CORBETT L. FREEMAN
86913
LICENSED
PROFESSIONAL ENGINEER

HL 93 LOADING

I. S. ENGINEERS, LLC
TBPE REG. # F-11657

Texas Department of Transportation
© 2012

IH 35W FROM NORTH TARRANT PKWY TO IH 820

ABUTMENT NO. 1

SB IH35W ENTRANCE RAMP TO MANAGED LANES

SCALE: NTS — SHEET 1 OF 1

DESIGN	FED.RD. DIV.NO.	FEDERAL AID PROJECT NO.		HIGHWAY NO.
ZS	6	(SEE TITLE SHEET)		IH 35W
GRAPHICS SPL	STATE	DISTRICT	COUNTY	SHEET NO.
CHECK CLF	TEXAS	FTW	TARRANT	1568
CHECK CLF	CONTROL	SECTION	JOB	
	0014	16	255, ETC.	

DRAWING DATE: 7/13/2012 FILENAME: S3BBR*BB-MLS*AB*01.dgn

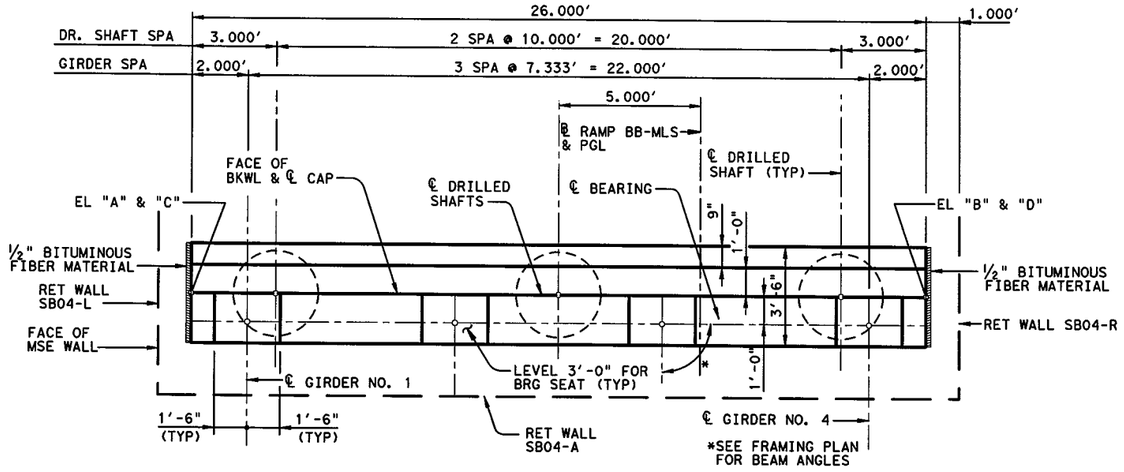

PLAN

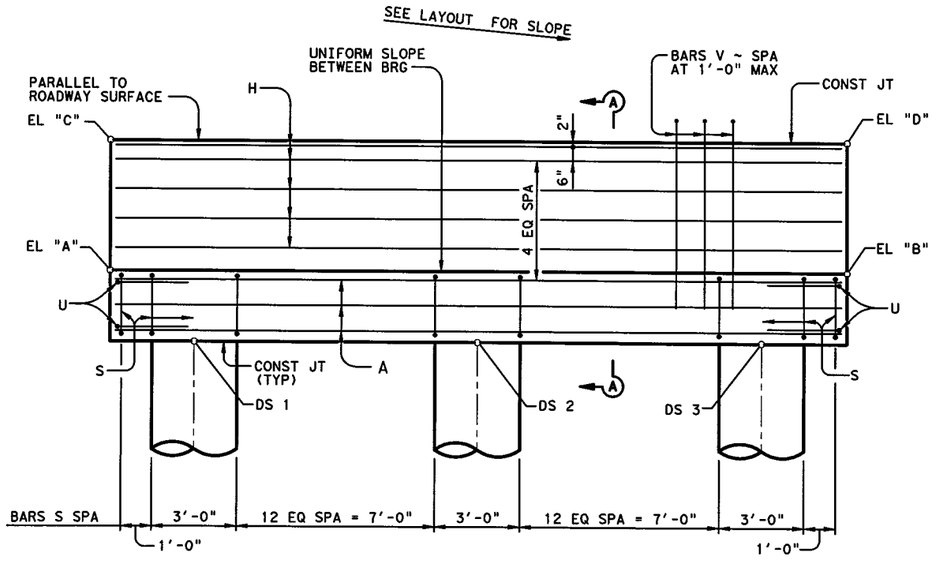

ELEVATION

TABLE OF ELEVATIONS				
CAP	"A"	"B"	"C"	"D"
	628.164	627.644	632.892	632.373
DRILL SHAFT	DS 1	DS 2	DS 3	
	625.604	625.404	625.204	
DS TIP	585.604	585.404	585.204	
AS-BUILT DS TIP				

NOTES:

DESIGNED ACCORDING TO AASHTO LRFD SPECIFICATIONS, 5TH EDITION (2010).

CLASS"C"(HPC) CONCRETE STRENGTH F'C = 3,600 PSI.

ALL CAP AND WALL REINFORCING SHALL BE GRADE 60.

SEE FD STANDARD FOR ALL FOUNDATION DETAILS AND NOTES.

CALCULATED FOUNDATION LOADS:
CAP DRILLED SHAFTS = 180 TONS/D.S.

TABLE OF ESTIMATED QUANTITIES				
BAR	NO.	SIZE	LENGTH	WEIGHT
A	11	#11	25'-8"	1,500
H	10	#5	25'-8"	268
S	30	#5	11'-4"	355
U	4	#6	8'-0"	48
V	27	#5	14'-2"	399
REINFORCING STEEL			LBS	2,570
CLASS "C" CONCRETE (ABUT)			CY	13.0

(1) INCREASE AS REQUIRED TO MAINTAIN 3¾" FROM FINISHED GRADE.

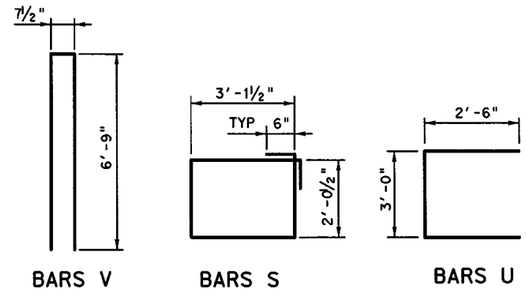

BARS V BARS S BARS U

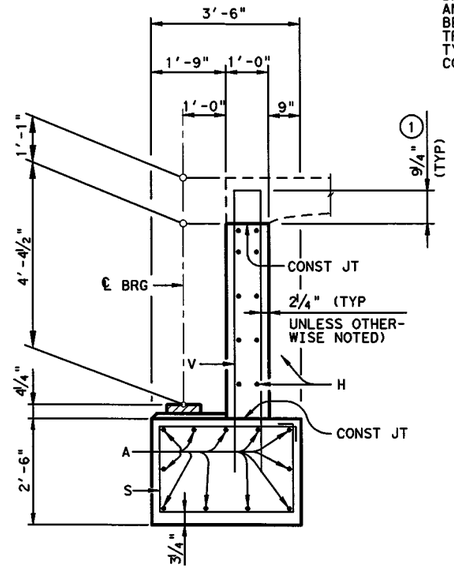

SECTION A-A

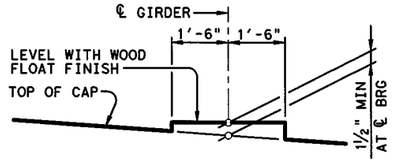

BEARING SEAT DETAIL

(BEARING SURFACE SHALL BE CLEAN AND FREE OF ALL LOOSE MATERIAL BEFORE PLACING BEARING PAD.)

THE FRONT AND BACK, BACKWALL FACES, SIDES, AND TOP, EXCEPT UNDER BEARING AREAS, SHALL BE TREATED WITH A "CLASS II, TYPE I PENETRATING CONCRETE SURFACE TREATMENT".

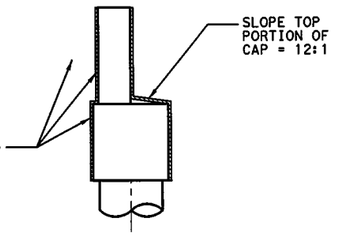

CONCRETE SURFACE TREATMENT DETAIL FOR ABUTMENT

7/11/12

HL 93 LOADING

I. S. ENGINEERS, LLC
TBPE REG. # F-11657

Texas Department of Transportation
© 2012

IH 35W FROM NORTH TARRANT PKWY TO IH 820

ABUTMENT NO. 9

SB IH35W ENTRANCE RAMP TO MANAGED LANES

SCALE: NTS — SHEET 1 OF 1

DESIGN	FED.RD. DIV.NO.	FEDERAL AID PROJECT NO.		HIGHWAY NO.
ZS	6	(SEE TITLE SHEET)		IH 35W
GRAPHICS SPL	STATE	DISTRICT	COUNTY	SHEET NO.
CHECK CLF	TEXAS	FTW	TARRANT	1569
CHECK CLF	CONTROL	SECTION	JOB	
	0014	16	255, ETC.	

DRAWING DATE: 7/13/2012 FILENAME: S3BBR*BB-MLS*AB*02.dgn

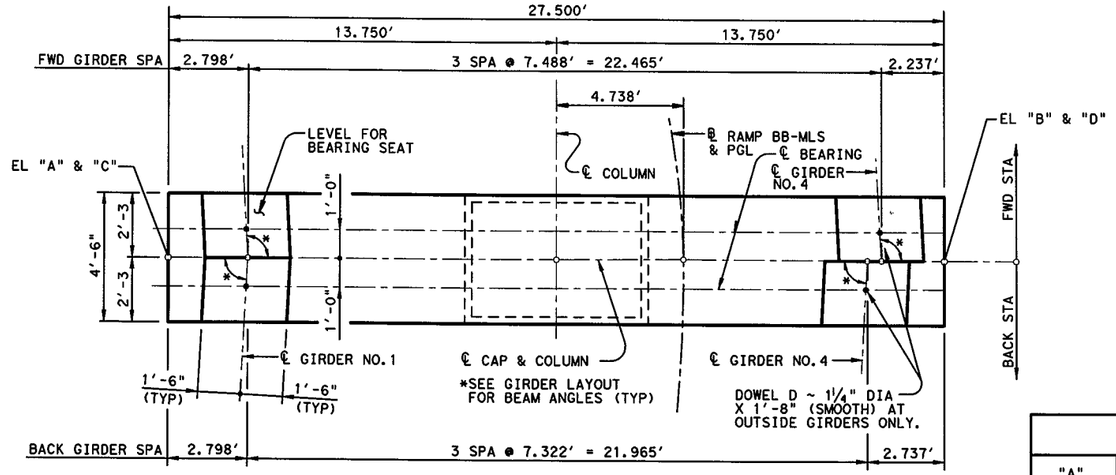

PLAN

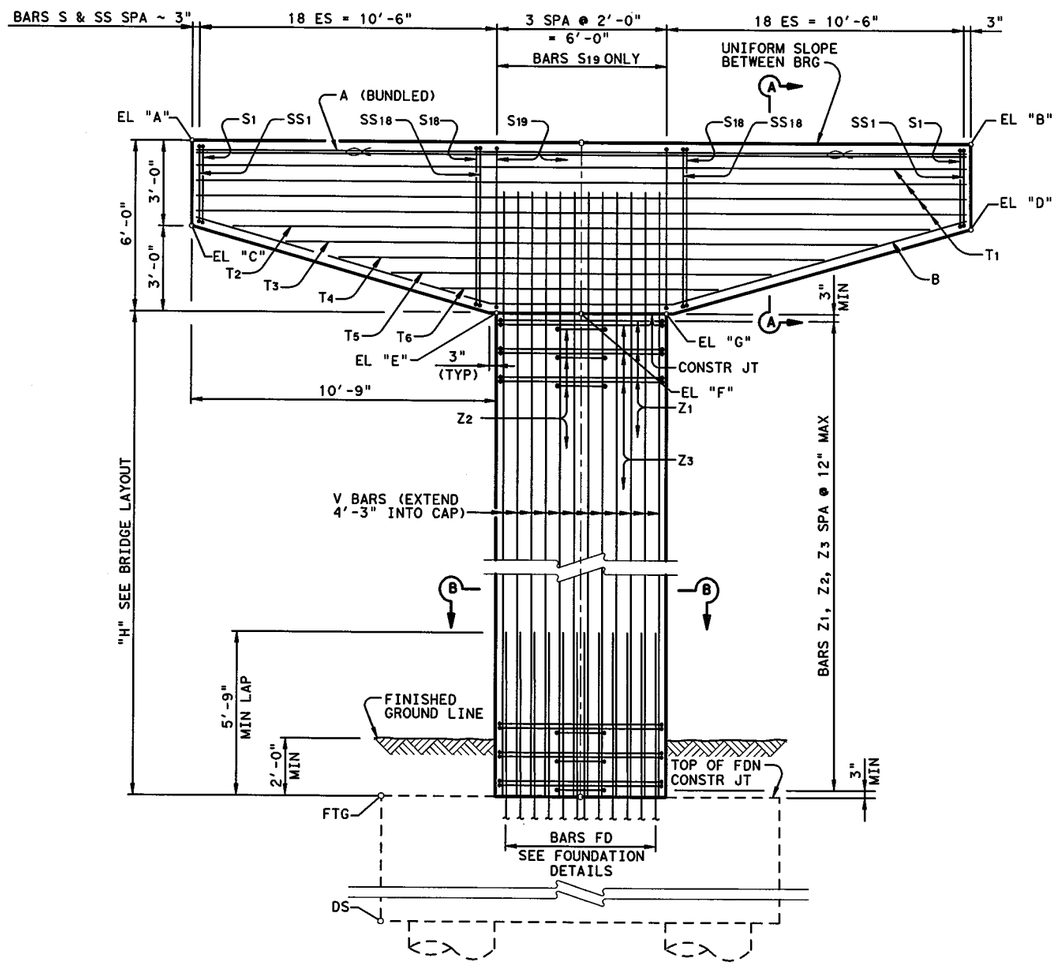

ELEVATION

GENERAL NOTES:

DESIGNED ACCORDING TO AASHTO LRFD SPECIFICATIONS, 5TH EDITION (2010).

CLASS "C" (HPC) CONCRETE STRENGTH F'C = 3,600 PSI.

ALL REINFORCING SHALL BE GRADE 60.

SEE FOUNDATION DETAILS FOR ALL FOUNDATION NOTES.

CALCULATED FOUNDATION LOAD: 421 TONS / D.S.

TABLE OF ELEVATIONS

"A"	"B"	"C"	"D"	"E"	"F"	"G"	FTG	TOP OF DS*	DS TIP	AS-BUILT DS TIP
649.062	649.682	646.062	646.682	643.304	643.372	643.439	634.372	628.372	612.372	

* TOP OF DRILLED SHAFT ELEVATIONS WERE ESTIMATED BASED ON GROUND ELEVATION INFORMATION AVAILABLE AT THE TIME OF DESIGN. CONTRACTOR SHALL CONFIRM THESE ELEVATIONS PRIOR TO DRILLING.

7/11/12
STATE OF TEXAS
CORBETT L. FREEMAN
86913
LICENSED
PROFESSIONAL ENGINEER

HL 93 LOADING

I. S. ENGINEERS, LLC
TBPE REG. # F-11657

Texas Department of Transportation
© 2012

IH 35W FROM NORTH TARRANT PKWY TO IH 820

INTERIOR BENT NO. 2
SB IH35W ENTRANCE RAMP TO MANAGED LANES

SCALE: NTS — SHEET 1 OF 2

DESIGN	FED. RD. DIV. NO.	FEDERAL AID PROJECT NO.		HIGHWAY NO.
CLF	6	(SEE TITLE SHEET)		IH 35W
GRAPHICS	STATE	DISTRICT	COUNTY	SHEET NO.
SPL	TEXAS	FTW	TARRANT	
CHECK	CONTROL	SECTION	JOB	1570
SB	0014	16	255, ETC.	
CHECK				
CLF				

DRAWING DATE: 7/13/2012 FILENAME: S3BBR*BB-MLS*IB*01a.dgn

③ TABLE OF COLUMN QUANTITIES

BENT	"H"	CL. "C" CONC (HPC) (COL)	BARS V 34 ~ #10		BARS Z1 #4 x 19'-4"		BARS Z2 #4 x 11'-5"		BARS Z3 #4 x 6'-11"	
NO.	FT	CY	LENGTH	WT.	NO.	WT.	NO.	WT.	NO.	WT.
2	9	8.0	13'-3"	1,939	10	129	10	76	10	46

②④ TOTAL ESTIMATED QUANTITIES

REINF. STEEL	CL. "C" CONC. (HPC) (BENT)
LB	CY
7,104	30.3

TABLE OF CONSTANT QUANTITIES ②

BAR	NO.	SIZE	LENGTH	WEIGHT
A	18	#11	27'-2"	2,598
B	5	#8	28'-0"	374
D	4	1¼"Ø	1'-8"	28
S1-18 AVG	36	#5	17'-5"	654
S19	4	#5	20'-6"	86
SS1-18 AVG	36	#5	15'-5"	579
T1	8	#6	27'-2"	326
T2-6 AVG	10	#6	17'-11"	269
REINFORCING STEEL			LBS	4,914
CL"C" CONCRETE (HPC) (CAP)			CY	22.3

② QUANTITIES SHOWN ARE FOR ONE BENT ONLY.

③ ADJUST BARS V LENGTH BY 1 FT AND NUMBER OF BARS Z BY 1 FOR EACH LINEAR FOOT OF VARIATION IN "H" VALUE.

④ ADJUST REINFORCING STEEL TOTAL BY 173 LBS AND CLASS "C" CONCRETE TOTAL BY 0.889 CY FOR EACH LINEAR FOOT OF VARIATION IN "H" VALUE.

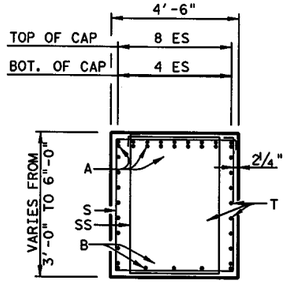

SECTION A-A

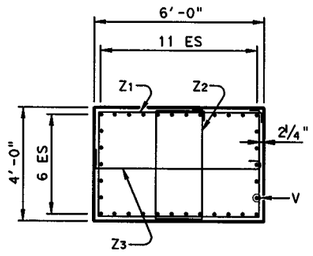

SECTION B-B

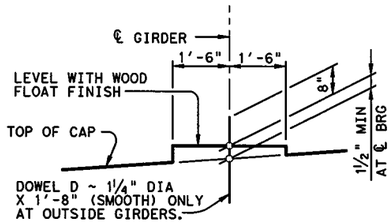

BEARING SEAT DETAIL

(BEARING SURFACE SHALL BE CLEAN AND FREE OF ALL LOOSE MATERIAL BEFORE PLACING BEARING PAD.)

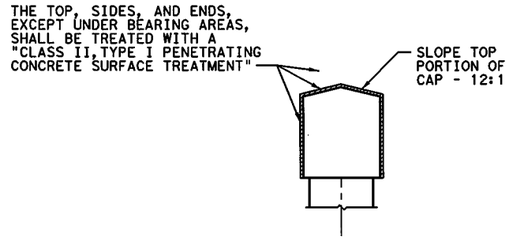

CONCRETE SURFACE TREATMENT DETAIL FOR INTERIOR BENT

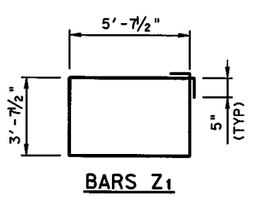

BARS Z1

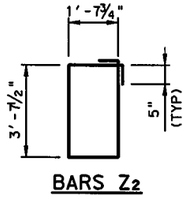

BARS Z2

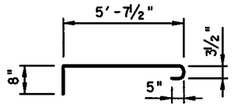

BARS Z3

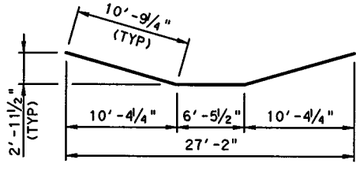

BARS B

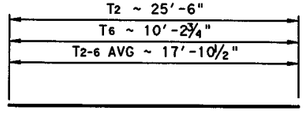

VARIABLE BARS T

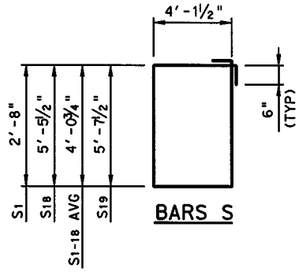

BARS S

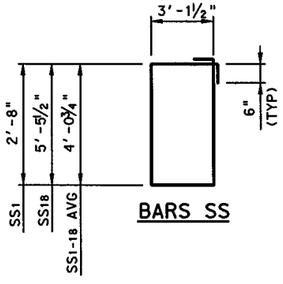

BARS SS

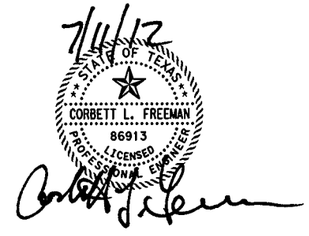

HL 93 LOADING

I. S. ENGINEERS, LLC
TBPE REG. # F-11657

Texas Department of Transportation
© 2012

IH 35W FROM NORTH TARRANT PKWY TO IH 820

INTERIOR BENT NO. 2

SB IH35W ENTRANCE RAMP TO MANAGED LANES

SCALE: NTS — SHEET 2 OF 2

DESIGN	FED. RD. DIV. NO.	FEDERAL AID PROJECT NO.		HIGHWAY NO.
CLF	6	(SEE TITLE SHEET)		IH 35W
GRAPHICS SPL	STATE	DISTRICT	COUNTY	SHEET NO.
CHECK SB	TEXAS	FTW	TARRANT	1571
CHECK CLF	CONTROL	SECTION	JOB	
	0014	16	255, ETC.	

DRAWING DATE: 7/13/2012 FILENAME: S3BBR*BB-MLS*IB*01b.dgn

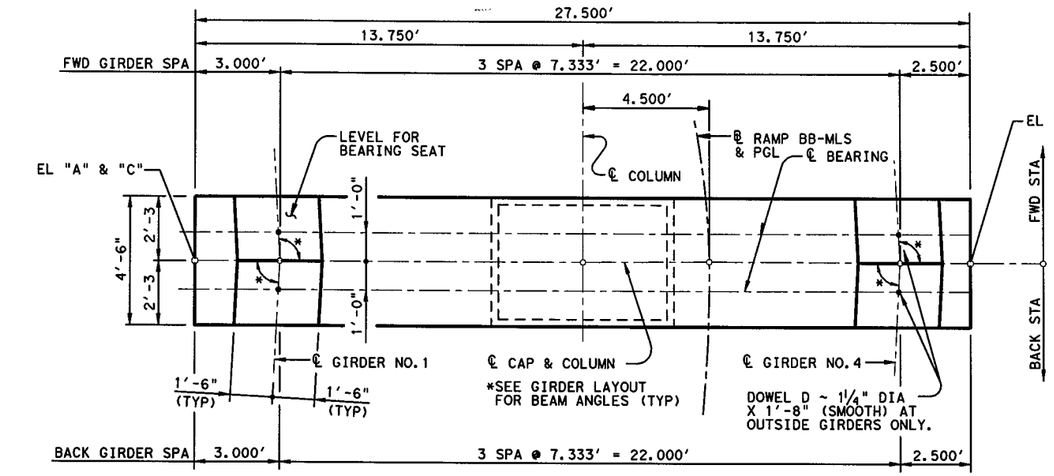

PLAN

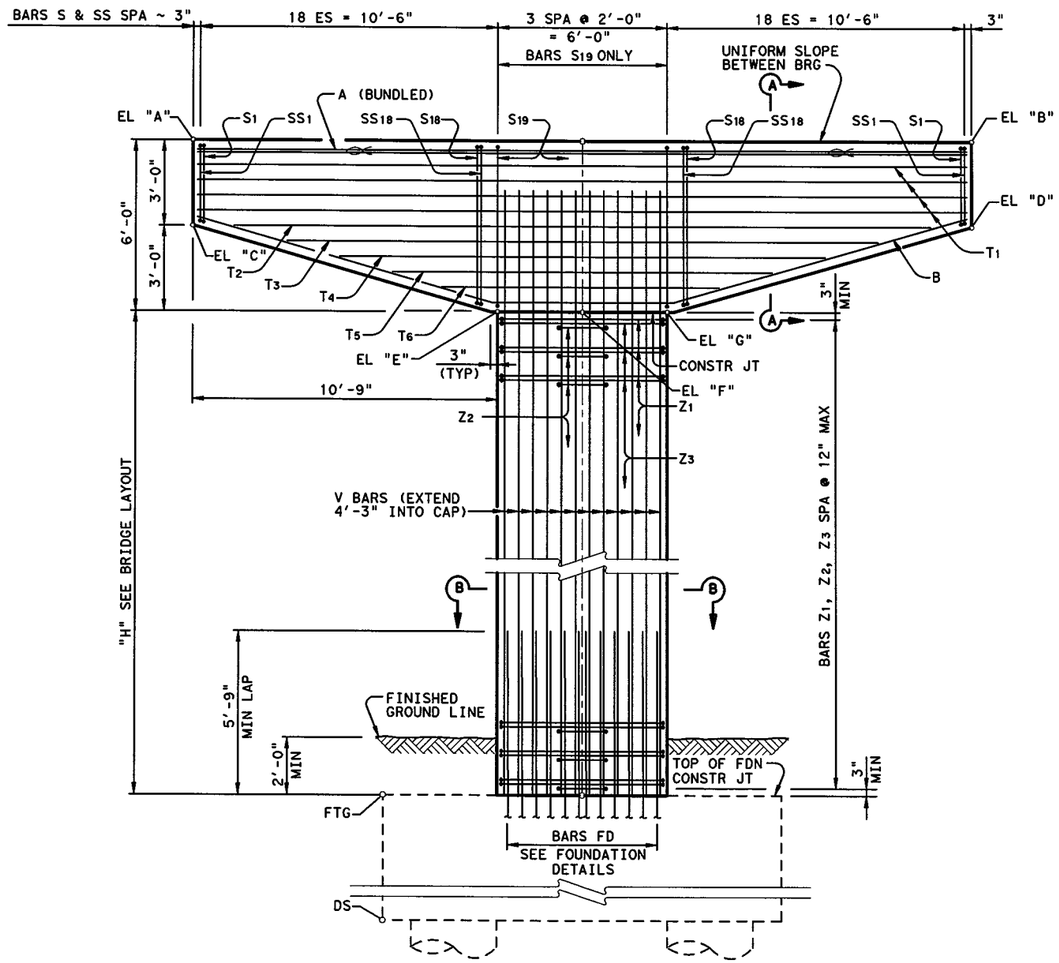

ELEVATION

GENERAL NOTES:

DESIGNED ACCORDING TO AASHTO LRFD SPECIFICATIONS, 5TH EDITION (2010).

CLASS "C" (HPC) CONCRETE STRENGTH F'C = 3,600 PSI.

ALL REINFORCING SHALL BE GRADE 60.

SEE FOUNDATION DETAILS FOR ALL FOUNDATION NOTES.

CALCULATED FOUNDATION LOAD: 321 TONS / D.S.

TABLE OF ELEVATIONS

"A"	"B"	"C"	"D"	"E"	"F"	"G"	FTG	TOP OF DS*	DS TIP	AS-BUILT DS TIP
650.785	651.940	647.785	648.940	645.237	645.363	645.489	622.363	616.363	604.363	

* TOP OF DRILLED SHAFT ELEVATIONS WERE ESTIMATED BASED ON GROUND ELEVATION INFORMATION AVAILABLE AT THE TIME OF DESIGN. CONTRACTOR SHALL CONFIRM THESE ELEVATIONS PRIOR TO DRILLING.

7/11/12

STATE OF TEXAS
CORBETT L. FREEMAN
86913
LICENSED
PROFESSIONAL ENGINEER

HL 93 LOADING

I. S. ENGINEERS, LLC
TBPE REG. # F-11657

Texas Department of Transportation
© 2012

IH 35W FROM NORTH TARRANT PKWY TO IH 820

INTERIOR BENT NO. 3
SB IH35W ENTRANCE RAMP TO MANAGED LANES

SCALE: NTS — SHEET 1 OF 2

DESIGN	FED.RD. DIV.NO.	FEDERAL AID PROJECT NO.		HIGHWAY NO.
CLF	6	(SEE TITLE SHEET)		IH 35W
GRAPHICS: SPL	STATE	DISTRICT	COUNTY	SHEET NO.
CHECK: SB	TEXAS	FTW	TARRANT	
CHECK: CLF	CONTROL 0014	SECTION 16	JOB 255, ETC.	1572

FILENAME: S3BBR*BB-MLS*IB*01c.dgn
DRAWING DATE: 7/13/2012

③ TABLE OF COLUMN QUANTITIES

BENT	"H"	CL. "C" CONC (HPC) (COL)	BARS V 34 ~ #10		BARS Z1 #4 x 19'-4"		BARS Z2 #4 x 11'-5"		BARS Z3 #4 x 6'-11"	
NO.	FT	CY	LENGTH	WT.	NO.	WT.	NO.	WT.	NO.	WT.
3	23	20.4	27'-3"	3,987	24	310	24	183	24	111

②④ TOTAL ESTIMATED QUANTITIES

REINF. STEEL	CL. "C" CONC. (HPC) (BENT)
LB	CY
9,505	42.7

TABLE OF CONSTANT QUANTITIES ②

BAR	NO.	SIZE	LENGTH	WEIGHT
A	18	#11	27'-2"	2,598
B	5	#8	28'-0"	374
D	4	1¼"Ø	1'-8"	28
S1-18 AVG	36	#5	17'-5"	654
S19	4	#5	20'-6"	86
SS1-18 AVG	36	#5	15'-5"	579
T1	8	#6	27'-2"	326
T2-6 AVG	10	#6	17'-11"	269
REINFORCING STEEL			LBS	4,914
CL"C" CONCRETE (HPC) (CAP)			CY	22.3

② QUANTITIES SHOWN ARE FOR ONE BENT ONLY.

③ ADJUST BARS V LENGTH BY 1 FT AND NUMBER OF BARS Z BY 1 FOR EACH LINEAR FOOT OF VARIATION IN "H" VALUE.

④ ADJUST REINFORCING STEEL TOTAL BY 173 LBS AND CLASS "C" CONCRETE TOTAL BY 0.889 CY FOR EACH LINEAR FOOT OF VARIATION IN "H" VALUE.

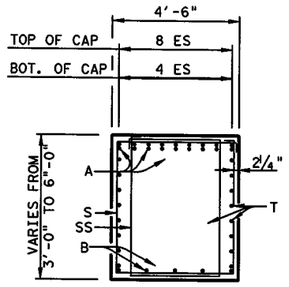

SECTION A-A

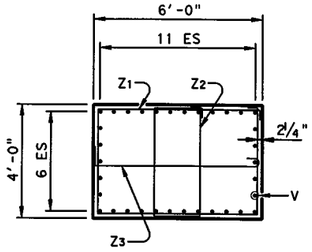

SECTION B-B

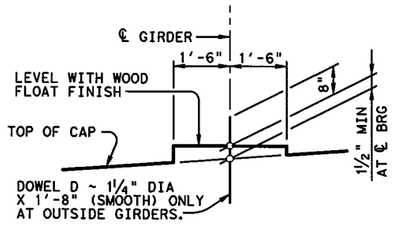

BEARING SEAT DETAIL

(BEARING SURFACE SHALL BE CLEAN AND FREE OF ALL LOOSE MATERIAL BEFORE PLACING BEARING PAD.)

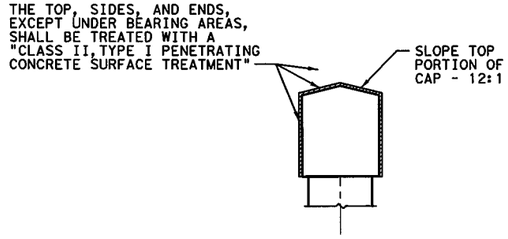

CONCRETE SURFACE TREATMENT DETAIL FOR INTERIOR BENT

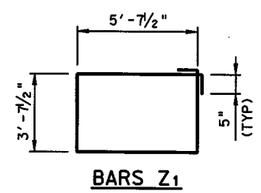

BARS Z1

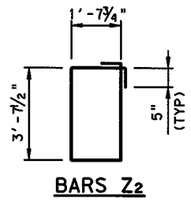

BARS Z2

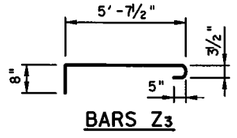

BARS Z3

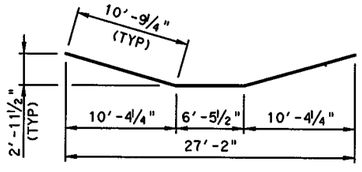

BARS B

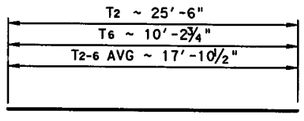

VARIABLE BARS T

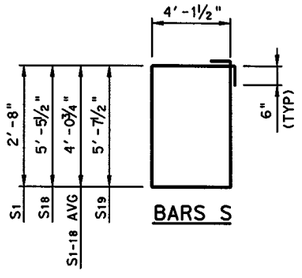

BARS S

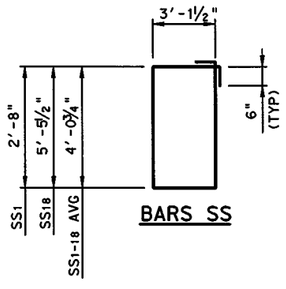

BARS SS

HL 93 LOADING

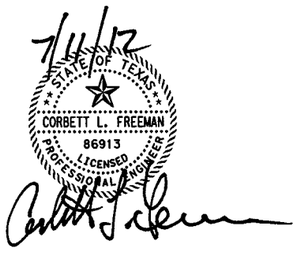

I. S. ENGINEERS, LLC
TBPE REG. # F-11657

Texas Department of Transportation
© 2012

IH 35W FROM NORTH TARRANT PKWY TO IH 820

INTERIOR BENT NO. 3

SB IH35W ENTRANCE RAMP TO MANAGED LANES

SCALE: NTS — SHEET 2 OF 2

DESIGN	FED.RD. DIV.NO.	FEDERAL AID PROJECT NO.		HIGHWAY NO.
CLF	6	(SEE TITLE SHEET)		IH 35W
GRAPHICS SPL	STATE	DISTRICT	COUNTY	SHEET NO.
CHECK SB	TEXAS	FTW	TARRANT	1573
CHECK CLF	CONTROL	SECTION	JOB	
	0014	16	255, ETC.	

DRAWING DATE: 7/13/2012 FILENAME: S3BBR*BB-MLS*IB#01d.dgn

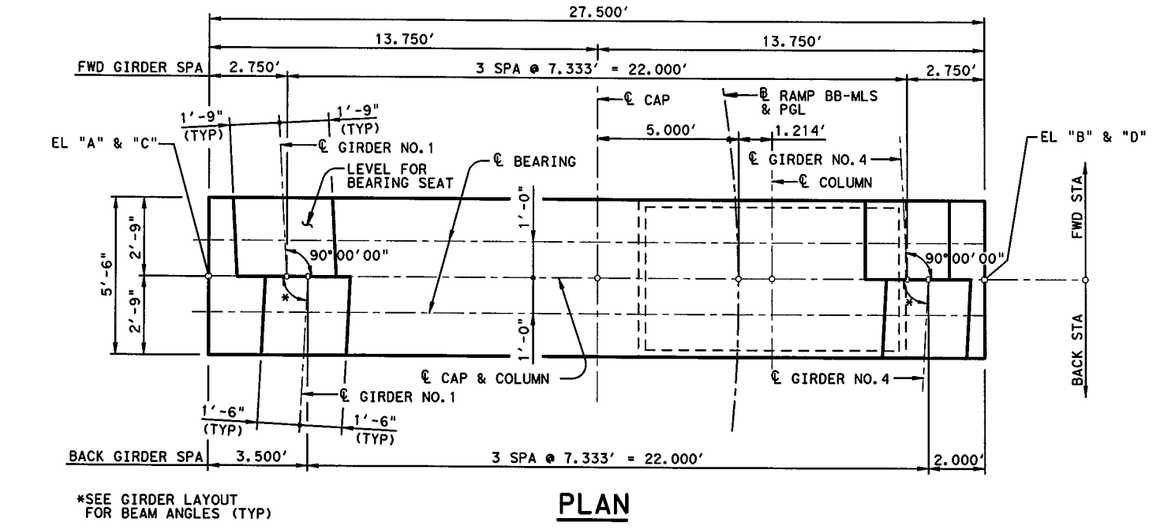

*SEE GIRDER LAYOUT FOR BEAM ANGLES (TYP)

PLAN

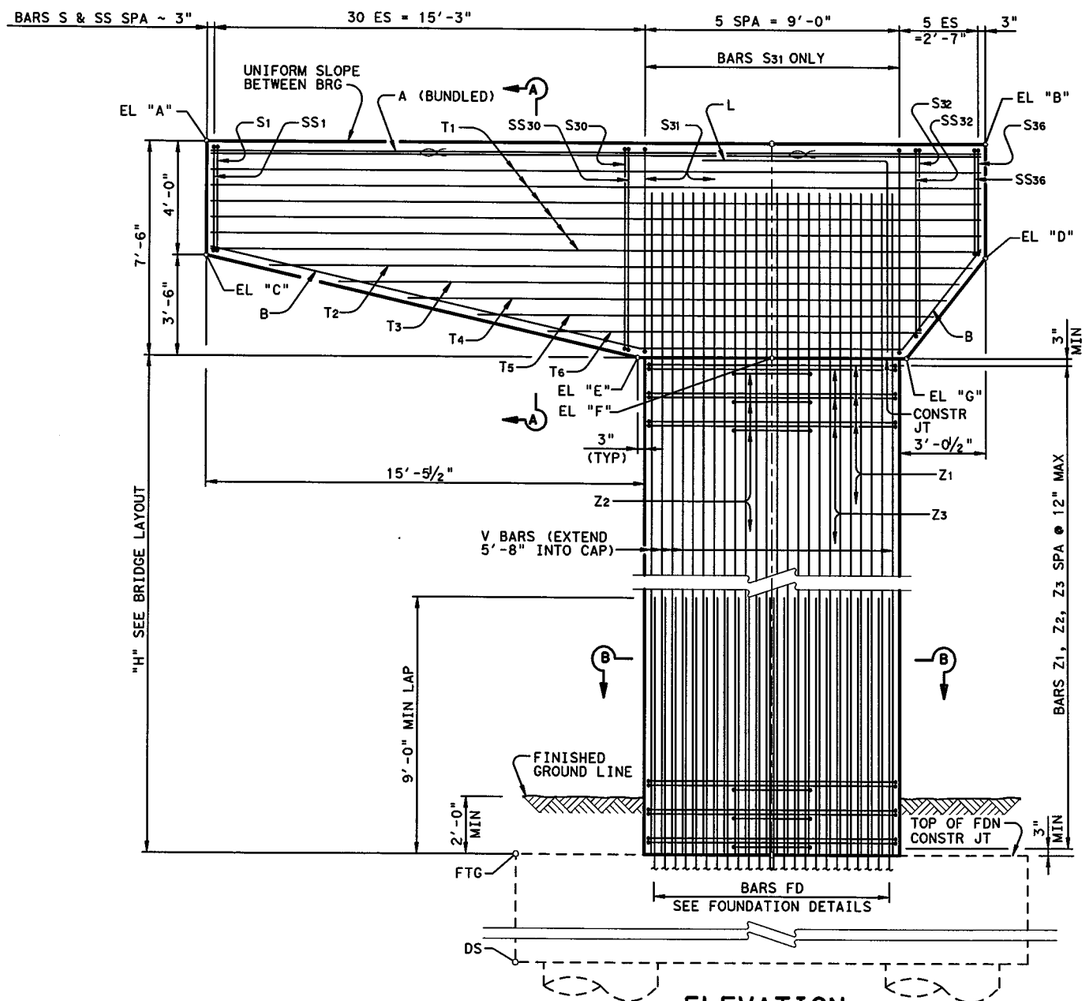

ELEVATION

GENERAL NOTES:

DESIGNED ACCORDING TO AASHTO LRFD SPECIFICATIONS, 5TH EDITION (2010).

CLASS "C" (HPC) CONCRETE STRENGTH F'C = 3,600 PSI.

ALL REINFORCING SHALL BE GRADE 60.

SEE FOUNDATION DETAILS FOR ALL FOUNDATION NOTES.

CALCULATED FOUNDATION LOAD: 649 TONS / D.S.

TABLE OF ELEVATIONS

"A"	"B"	"C"	"D"	"E"	"F"	"G"	FTG	TOP OF DS*	DS TIP	AS-BUILT DS TIP
651.134	652.073	647.134	648.073	644.162	644.316	644.469	617.316	611.316	594.316	

* TOP OF DRILLED SHAFT ELEVATIONS WERE ESTIMATED BASED ON GROUND ELEVATION INFORMATION AVAILABLE AT THE TIME OF DESIGN. CONTRACTOR SHALL CONFIRM THESE ELEVATIONS PRIOR TO DRILLING.

7/11/12

STATE OF TEXAS
CORBETT L. FREEMAN
86913
LICENSED
PROFESSIONAL ENGINEER

HL 93 LOADING

I. S. ENGINEERS, LLC
TBPE REG. # F-11657

Texas Department of Transportation

© 2012

IH 35W FROM NORTH TARRANT PKWY TO IH 820

INTERIOR BENT NO. 4

SB IH35W ENTRANCE RAMP TO MANAGED LANES

SCALE: NTS — SHEET 1 OF 2

DESIGN	FED.RD. DIV.NO.	FEDERAL AID PROJECT NO.		HIGHWAY NO.
CLF	6	(SEE TITLE SHEET)		IH 35W
GRAPHICS AXD	STATE	DISTRICT	COUNTY	SHEET NO.
CHECK SB	TEXAS	FTW	TARRANT	
CHECK CLF	CONTROL 0014	SECTION 16	JOB 255, ETC.	1574

DRAWING DATE: 7/13/2012 FILENAME: S3BBR*BB-MLS*IB*02a.dgn

③ TABLE OF COLUMN QUANTITIES

BENT	"H"	CL. "C" CONC. (MASS) (HPC) (COL)	BARS V 76 ~ #11		BARS Z1 #4 x 27'-4"		BARS Z2 #4 x 15'-7"		BARS Z3 #4 x 9'-11"	
NO.	FT	CY	LENGTH	WT.	NO.	WT.	NO.	WT.	NO.	WT.
4	27	45.0	32'-8"	13,190	28	511	28	291	28	185

②④ TOTAL ESTIMATED QUANTITIES

REINF. STEEL	CL. "C" CONC (MASS) (HPC) (COL)	CL. "C" CONC (MASS) (HPC) (CAP)
LB	CY	CY
23,277	45.0	36.2

TABLE OF CONSTANT QUANTITIES ②

BAR	NO.	SIZE	LENGTH	WEIGHT
A	28	#11	27'-2"	4,041
B	6	#8	29'-3"	469
E1	16	#6	6'-8"	160
E2	16	#6	6'-5"	154
L	14	#11	13'-0"	967
S1-30 AVG	30	#6	22'-11"	1,033
S31	6	#6	26'-6"	239
S32-36 AVG	5	#6	22'-3"	167
SS1-30 AVG	30	#6	20'-11"	943
SS32-36 AVG	5	#6	20'-3"	152
T1	12	#6	27'-2"	490
T2-6 AVG	10	#6	19'-0"	285
REINFORCING STEEL			LBS	9,100
CL "C" CONC (MASS) (HPC) (CAP)			CY	36.2

② QUANTITIES SHOWN ARE FOR ONE BENT ONLY.

③ ADJUST BARS V LENGTH BY 1 FT AND NUMBER OF BARS Z BY 1 FOR EACH LINEAR FOOT OF VARIATION IN "H" VALUE.

④ ADJUST REINFORCING STEEL TOTAL BY 441 LBS AND CLASS "C" CONCRETE TOTAL BY 1.667 CY FOR EACH LINEAR FOOT OF VARIATION IN "H" VALUE.

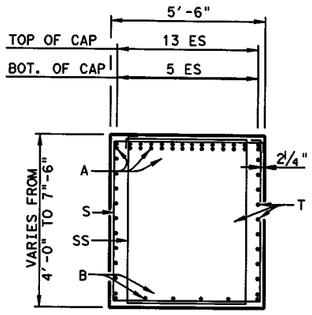

SECTION A-A

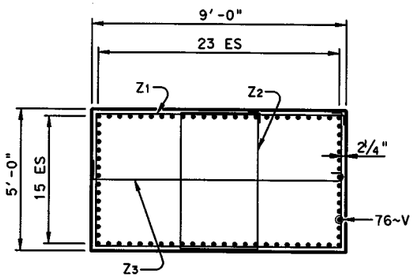

SECTION B-B

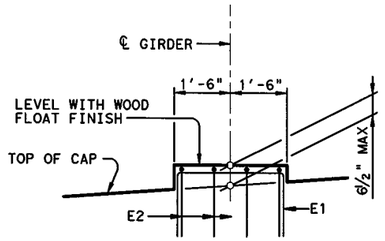

BACK SPAN

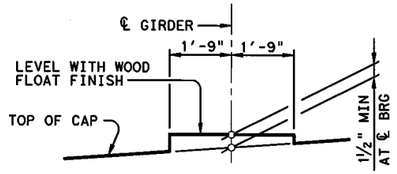

FWD SPAN

THE TOP, SIDES, AND ENDS, EXCEPT UNDER BEARING AREAS, SHALL BE TREATED WITH A "CLASS II,TYPE I PENETRATING CONCRETE SURFACE TREATMENT"

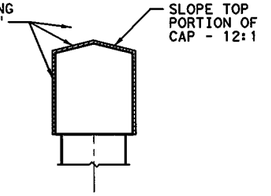

BEARING SEAT DETAIL

(BEARING SURFACE SHALL BE CLEAN AND FREE OF ALL LOOSE MATERIAL BEFORE PLACING BEARING PAD.)

CONCRETE SURFACE TREATMENT DETAIL FOR INTERIOR BENT

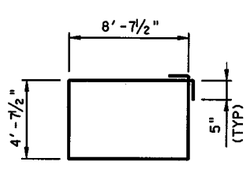

BARS Z1

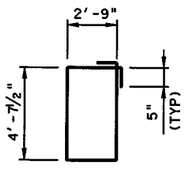

BARS Z2

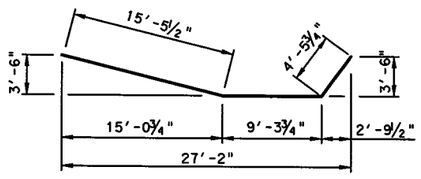

BARS B

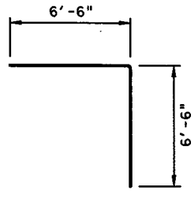

BARS L

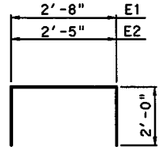

BARS E

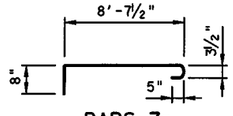

BARS Z3

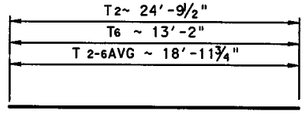

VARIABLE BARS T

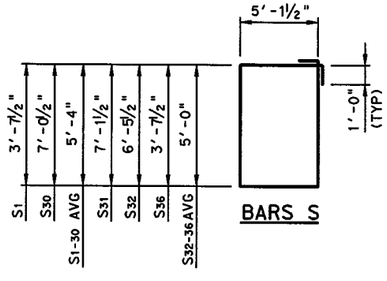

BARS S

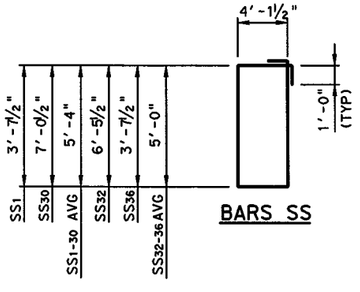

BARS SS

7/11/12

STATE OF TEXAS
CORBETT L. FREEMAN
86913
LICENSED
PROFESSIONAL ENGINEER

HL 93 LOADING

I. S. ENGINEERS, LLC
TBPE REG. # F-11657

Texas Department of Transportation
© 2012

IH 35W FROM NORTH TARRANT PKWY TO IH 820

INTERIOR BENT NO. 4

SB IH35W ENTRANCE RAMP TO MANAGED LANES

SCALE: NTS — SHEET 2 OF 2

DESIGN	FED.RD. DIV.NO.	FEDERAL AID PROJECT NO.		HIGHWAY NO.
CLF	6	(SEE TITLE SHEET)		IH 35W
GRAPHICS AXD	STATE	DISTRICT	COUNTY	SHEET NO.
CHECK SB	TEXAS	FTW	TARRANT	
CHECK CLF	CONTROL	SECTION	JOB	1575
	0014	16	255, ETC.	

DRAWING DATE: 7/13/2012 FILENAME: S38BR*BB-MLS*1B*02b.dgn

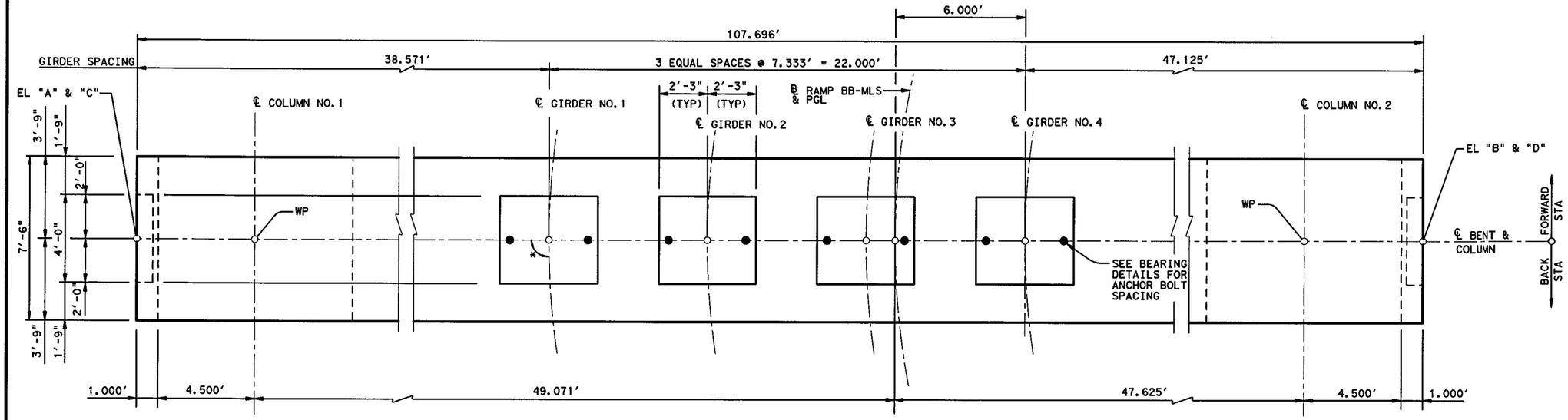

PLAN

*SEE GIRDER LAYOUT FOR BEAM ANGLES (TYP)

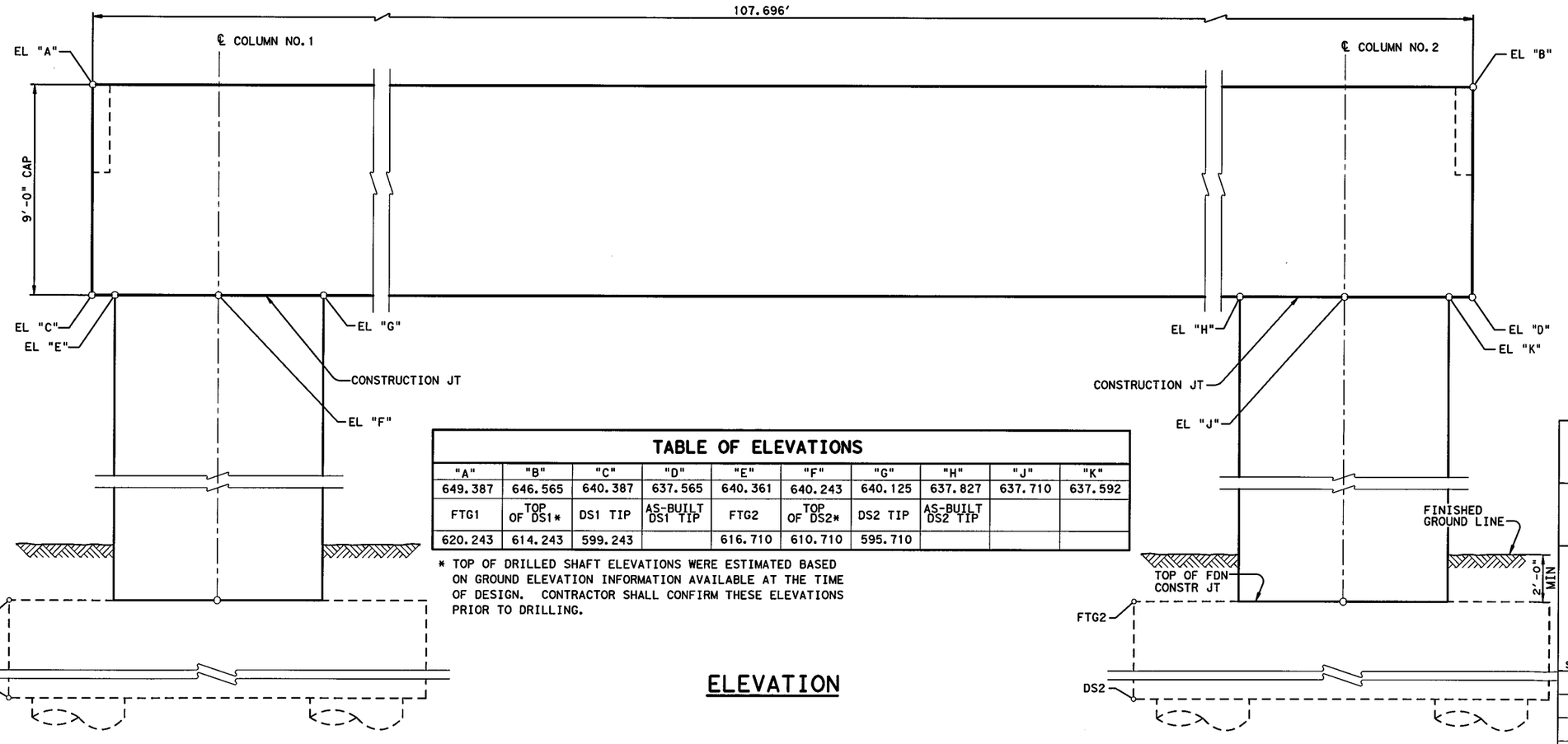

TABLE OF ELEVATIONS

"A"	"B"	"C"	"D"	"E"	"F"	"G"	"H"	"J"	"K"
649.387	646.565	640.387	637.565	640.361	640.243	640.125	637.827	637.710	637.592
FTG1	TOP OF DS1*	DS1 TIP	AS-BUILT DS1 TIP	FTG2	TOP OF DS2*	DS2 TIP	AS-BUILT DS2 TIP		
620.243	614.243	599.243		616.710	610.710	595.710			

* TOP OF DRILLED SHAFT ELEVATIONS WERE ESTIMATED BASED ON GROUND ELEVATION INFORMATION AVAILABLE AT THE TIME OF DESIGN. CONTRACTOR SHALL CONFIRM THESE ELEVATIONS PRIOR TO DRILLING.

ELEVATION

7/28/12
STATE OF TEXAS
CORBETT L. FREEMAN
86913
LICENSED PROFESSIONAL ENGINEER

HL 93 LOADING

I. S. ENGINEERS, LLC
TBPE REG. # F-11657

Texas Department of Transportation
© 2012

IH 35W FROM NORTH TARRANT PKWY TO IH 820

INTERIOR BENT NO. 5
SB IH35W ENTRANCE RAMP TO MANAGED LANES

SCALE: NTS

SHEET 1 OF 5

DESIGN	FED. RD. DIV. NO.	FEDERAL AID PROJECT NO.		HIGHWAY NO.
CLF	6	(SEE TITLE SHEET)		IH 35W
GRAPHICS	STATE	DISTRICT	COUNTY	SHEET NO.
AXD	TEXAS	FTW	TARRANT	
CHECK	CONTROL	SECTION	JOB	1576
SB	0014	16	255, ETC.	
CHECK				
CLF				

FILENAME: S38BR*BB-MLS*IB*03.dgn
DRAWING DATE: 7/28/2012

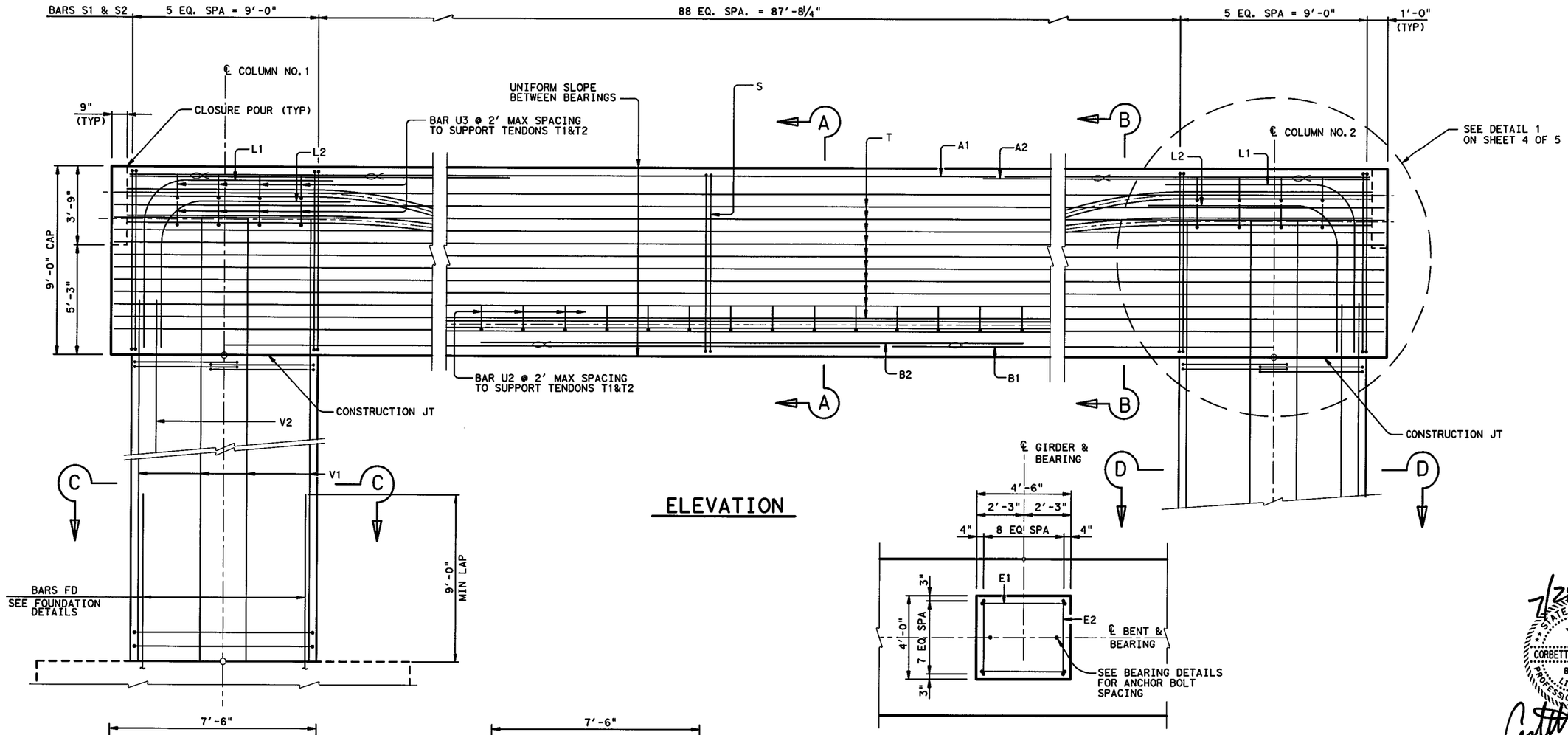

7/28/12
STATE OF TEXAS
CORBETT L. FREEMAN
86913
LICENSED PROFESSIONAL ENGINEER

HL 93 LOADING

I. S. ENGINEERS, LLC
TBPE REG. # F-11657

Texas Department of Transportation
© 2012

IH 35W FROM NORTH TARRANT PKWY TO IH 820

INTERIOR BENT NO. 5
SB IH35W ENTRANCE RAMP TO MANAGED LANES

SCALE: NTS — SHEET 2 OF 5

DESIGN	FED.RD. DIV.NO.	FEDERAL AID PROJECT NO.		HIGHWAY NO.
CLF	6	(SEE TITLE SHEET)		IH 35W
GRAPHICS AXD	STATE	DISTRICT	COUNTY	SHEET NO.
CHECK SB	TEXAS	FTW	TARRANT	
CHECK CLF	CONTROL	SECTION	JOB	1577
	0014	16	255, ETC.	

DRAWING DATE: 7/28/2012 FILENAME: S3BBR*BB-MLS*IB#04.dgn

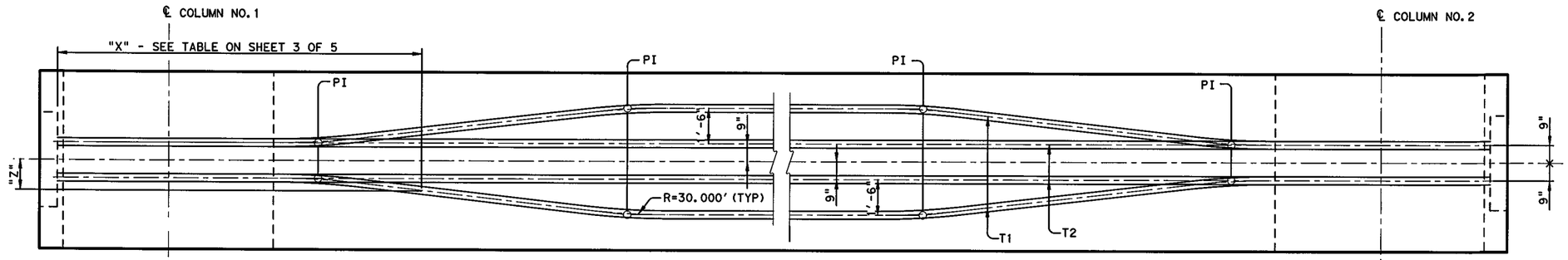

BENT CAP PLAN

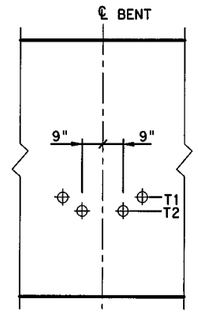

SECTION H-H

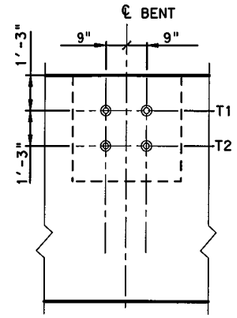

SECTION G-G

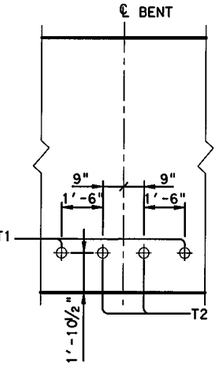

SECTION I-I

CONSTRUCTION/STRESSING:

1. AFTER CAP HAS REACHED 5000 PSI, STRESS TENDONS FROM LEFT END TO MAX JACKING STRESS.

2. AFTER STRESSING, GROUT TENDONS IN ACCORDANCE WITH GROUT AND P.T. SUPPLIER'S RECOMMENDATIONS.

3. GIRDERS MAY BE ERECTED AFTER GROUT IN DUCTS HAS REACHED A COMPRESSIVE STRENGTH EQUAL TO DESIGN STRENGTH. HOWEVER, GROUT CURING TIME MAY BE NO LESS THAN 3 DAYS.

4. AFTER CAP HAS REACHED 7500 PSI, PLACE FORMS FOR BRIDGE DECK.

POST-TENSIONING NOTES:

FURNISH AND INSTALL ALL POST-TENSIONING HARDWARE, COMPONENTS, STRANDS AND GROUT IN ACCORDANCE WITH ITEM 426, "PRESTRESSING".

SUPPLY PLASTIC POST-TENSIONING DUCTS. SECURELY SUPPORT AT 2'-0" MAXIMUM INTERVALS TO INSURE THAT PROPER ALIGNMENT IS MAINTAINED DURING CONCRETE PLACEMENT.

ADJUST REINFORCING INTERFERING WITH THE POST-TENSIONING TENDON ALIGNMENT AS DIRECTED BY THE ENGINEER. REPLACE ANY CUT REINFORCING STEEL AS CLOSE AS POSSIBLE TO ITS PLAN LOCATION.

TENDONS ARE 32 x 0.6"DIA STRAND TENDONS (LO-RELAXTION STRANDS). PROVIDE THE POST-TENSIONING FORCE SPECIFIED ON THE PLANS AT THE INDICATED CRITICAL SECTION. THE FORCE SPECIFIED IS AFTER ALL LOSSES HAVE BEEN ACCOUNTED FOR.

FRICTION LOSS IS BASED ON U = 0.23. K = 0.0002 AND ANCHOR SET = 3/8". LOSSES OTHER THAN ANCHORING = 13.95 KSI.

ASSUMED ECCENTRICITY BETWEEN ℄ DUCT AND CG TENDON = 0.50".

CALCULATED PRESTRESSING (GROUTED) ~ BASED ON FINAL TOTAL POST-TENSIONING FORCE REQUIRED AFTER ALL LOSSES. (REQUIRED FINAL FORCE IN TENDONS x AVERAGE LENGTH ~ (4326K x 106.70)/1000 = 462 MKF).

SUBMIT DESIGN CALCULATIONS AND POST-TENSIONING DETAILS IN ACCORDANCE WITH ITEM 426.4.

THE CONTRACTOR AND P.T. SUPPLIER ARE RESPONSIBLE FOR PROVIDING SUPPLEMENTARY REINFORCING (SPIRALS) TO RESIST STRESSES IN THE AREA IMMEDIATELY SURROUNDING THE P.T. ANCHORS.

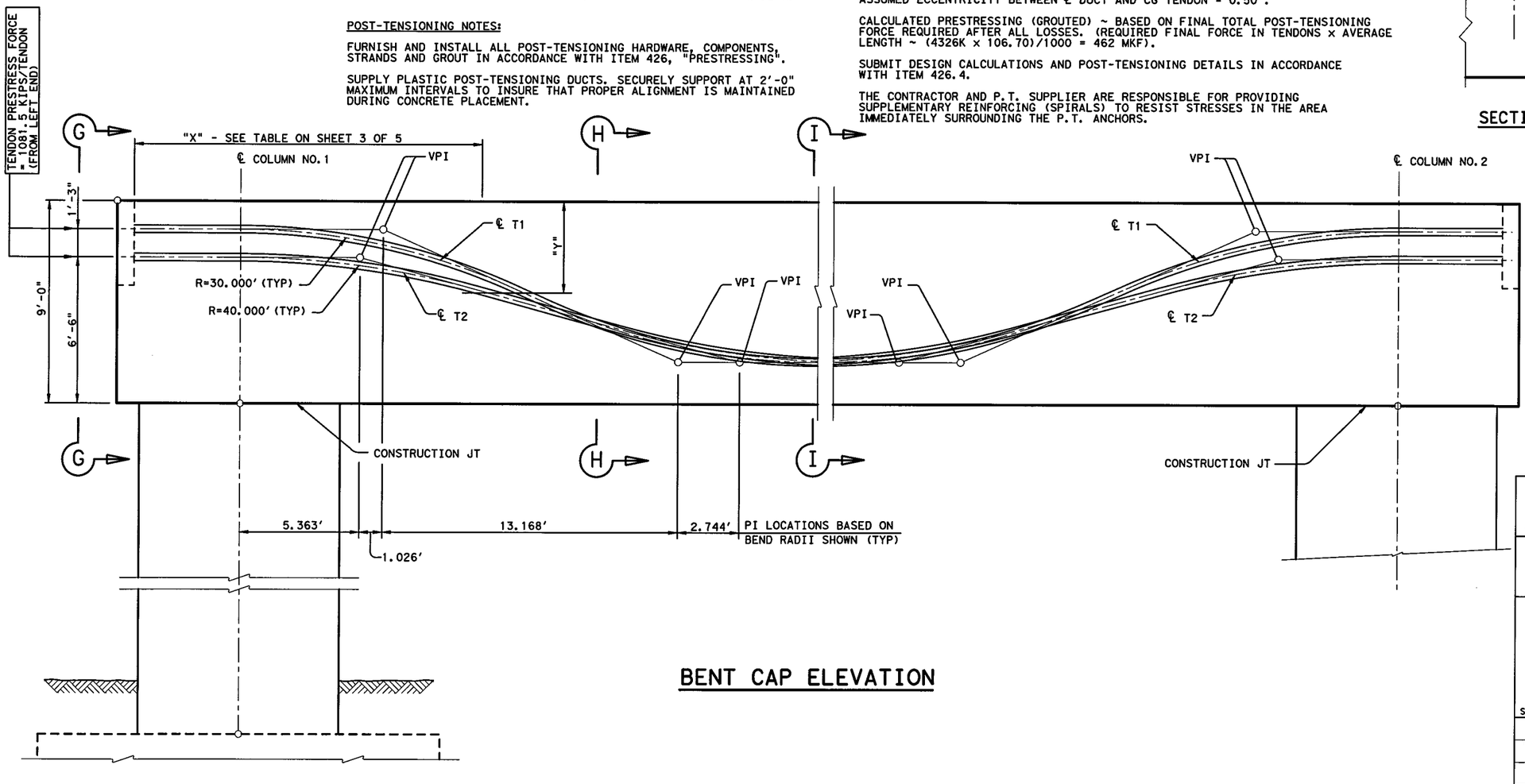

BENT CAP ELEVATION

HL 93 LOADING

I. S. ENGINEERS, LLC
TBPE REG. # F-11657

Texas Department of Transportation
© 2012

IH 35W FROM NORTH TARRANT PKWY TO IH 820

INTERIOR BENT NO. 5
SB IH35W ENTRANCE RAMP TO MANAGED LANES

SCALE: NTS — SHEET 3 OF 5

DESIGN	FED. RD. DIV. NO.	FEDERAL AID PROJECT NO.		HIGHWAY NO.
CLF	6	(SEE TITLE SHEET)		IH 35W
GRAPHICS: AXD	STATE	DISTRICT	COUNTY	SHEET NO.
CHECK: SB	TEXAS	FTW	TARRANT	
CHECK: CLF	CONTROL	SECTION	JOB	1578
	0014	16	255, ETC.	

7/26/12
STATE OF TEXAS
CORBETT L. FREEMAN
86913
LICENSED
PROFESSIONAL ENGINEER

FILENAME: S3BBR*BB-MLS*IB*05.dgn
DRAWING DATE: 7/28/2012

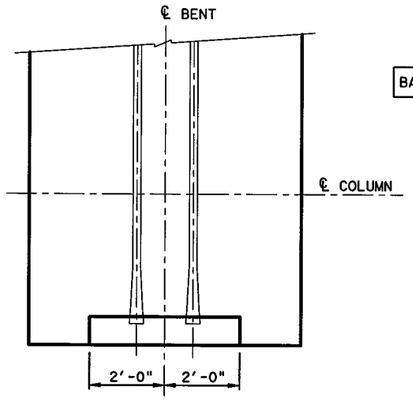

TOP VIEW

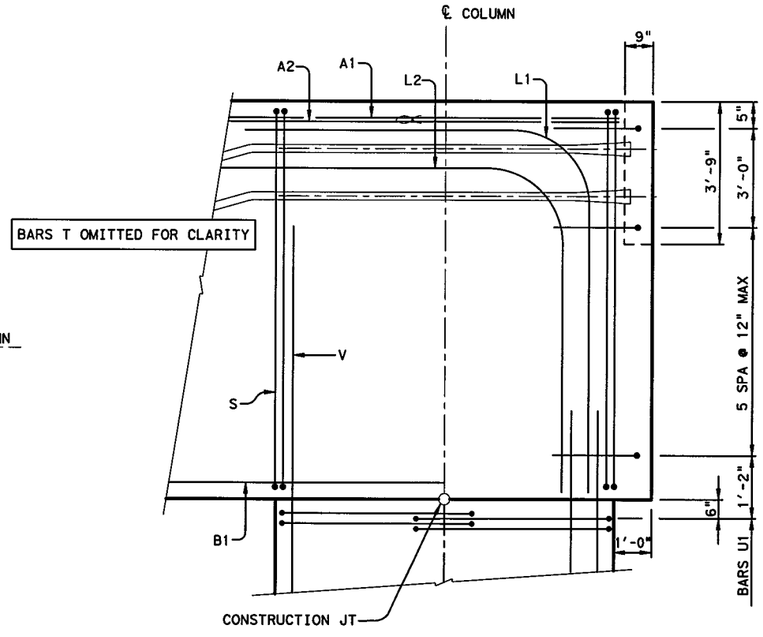

DETAIL 1

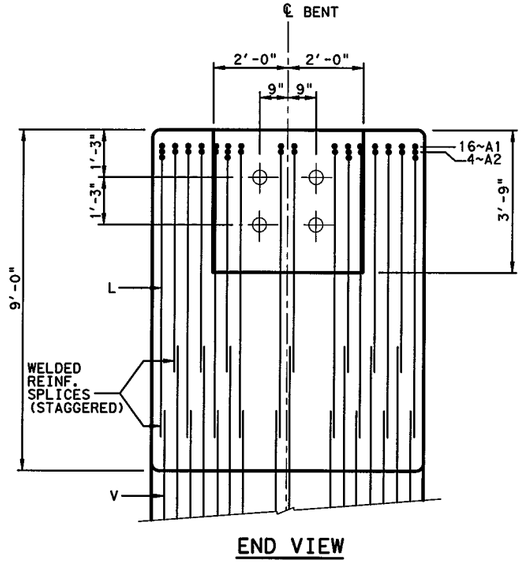

END VIEW

SECTION THRU P/T DUCTS

TABLE OF TENDON PROFILES			
"X" (FT)	"Y" (FT) T1	"Y" (FT) T2	"Z" (FT)
0.000	1.250	2.500	0.750
4.750	1.250	2.500	0.750
9.250	1.589	2.754	0.750
11.250	1.962	3.032	0.805
13.250	2.479	3.413	0.991
15.250	3.147	3.902	1.218
17.250	3.976	4.449	1.446
19.250	4.855	4.995	1.674
21.250	5.599	5.541	1.902
23.250	6.186	6.061	2.123
25.250	6.626	6.478	2.240
27.250	6.926	6.790	2.250
29.250	7.090	7.000	2.250
31.250	7.125	7.125	2.250
74.946	7.125	7.125	2.250
76.946	7.090	7.000	2.250
78.946	6.926	6.790	2.250
80.946	6.626	6.478	2.240
82.946	6.186	6.061	2.123
84.946	5.599	5.541	1.902
86.946	4.855	4.995	1.674
88.946	3.976	4.449	1.446
90.946	3.147	3.902	1.218
92.946	2.479	3.413	0.991
94.946	1.962	3.032	0.805
96.946	1.589	2.754	0.750
101.446	1.250	2.500	0.750
106.196	1.250	2.500	0.750

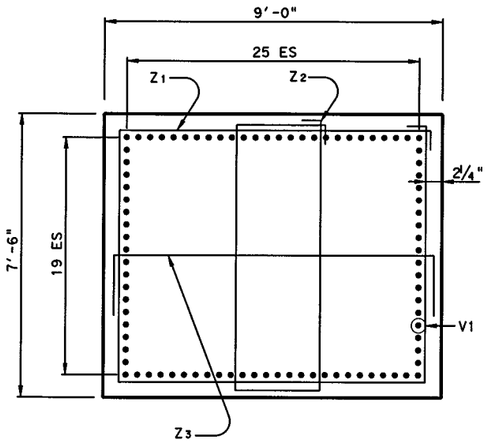

SECTION C-C

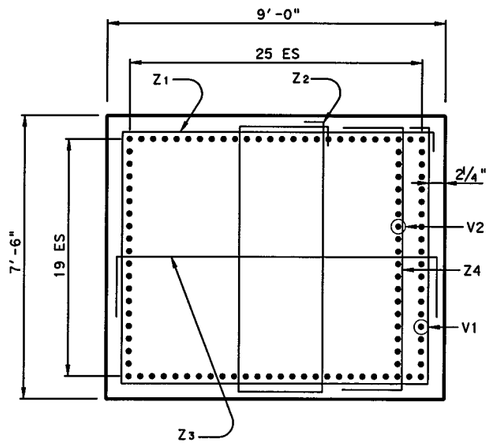

SECTION D-D

7/28/12

STATE OF TEXAS
CORBETT L. FREEMAN
86913
LICENSED
PROFESSIONAL ENGINEER

HL 93 LOADING

I. S. ENGINEERS, LLC
TBPE REG. # F-11657

Texas Department of Transportation
© 2012

IH 35W FROM NORTH TARRANT PKWY TO IH 820

INTERIOR BENT NO. 5
SB IH35W ENTRANCE RAMP TO MANAGED LANES

SCALE: NTS — SHEET 4 OF 5

DESIGN	FED. RD. DIV. NO.	FEDERAL AID PROJECT NO.		HIGHWAY NO.
CLF	6	(SEE TITLE SHEET)		IH 35W
GRAPHICS AXD	STATE	DISTRICT	COUNTY	SHEET NO.
CHECK SB	TEXAS	FTW	TARRANT	1579
CHECK CLF	CONTROL	SECTION	JOB	
	0014	16	255, ETC.	

DRAWING DATE: 7/28/2012 FILENAME: S3BBR*BB-MLS*IB*06.dgn

① TABLE OF VARIABLE QUANTITIES															TOTAL EST. QUANT.		
BENT	"H"	CL. "C" CONC. (MASS) (HPC) (COL)	BARS V1 88 ~ #11		BARS V2 #11 x 12'-0"		BARS Z1 #4 x 32'-4"		BARS Z2 #4 x 19'-7"		BARS Z3 #4 x 11'-8"		BARS Z4 #4 x 10'-2"		REINF. STEEL	CL. "C" CONC. (MASS) (HPC) (COL)	CL. "F" CONC. (MASS) (HPC) (CAP)
NO.	FT	CY	LENGTH	WT.	NO.	WT.	NO.	WT.	NO.	WT.	NO.	WT.	NO.	WT.	LB	CY	CY
5(L)	20	50.0	22'-10"	10,676	14	893	21	454	21	275	21	164	11	75	61,998	102.5	269.5
5(R)	21	52.5	23'-10"	11,143	14	893	22	475	22	288	22	171	11	75			

① QUANTITIES SHOWN ARE FOR ONE COLUMN ONLY.

GENERAL NOTES:

DESIGNED ACCORDING TO AASHTO LRFD SPECIFICATIONS, 5TH EDITION (2010).

CLASS "F" (HPC) CONCRETE STRENGTH F'C = 7,500 PSI.

CLASS "C" (HPC) CONCRETE STRENGTH F'C = 3,600 PSI.

ALL REINFORCING STEEL SHALL BE GRADE 60.

SEE SHEET 3 OF 5 FOR POST-TENSIONING DETAILS, NOTES, AND PROCEDURES.

SEE FOUNDATION DETAILS FOR ALL FOUNDATION NOTES.

CALCULATED FOUNDATION LOAD: 547 TONS/D.S.

TABLE OF CONSTANT QUANTITIES				
BAR	NO.	SIZE	LENGTH	WEIGHT
A1***	16	#11	114'-9"	9,755
A2	8	#11	20'-0"	850
B1***	16	#11	105'-7"	8,975
B2	4	#11	30'-0"	638
E1	32	#6	8'-10"	425
E2	36	#6	8'-6"	460
L1*	32	#11	17'-0"	2,890
L2*	32	#11	16'-0"	2,720
S1	99	#5	32'-6"	3,356
S2	99	#5	25'-0"	2,581
T **	20	#6	107'-5"	3,227
U1	14	#6	9'-0"	189
U2	22	#6	6'-8"	220
U3	16	#6	5'-5"	130
REINFORCING STEEL			LB	36,416
CL"F" CONC(MASS)(HPC)(CAP)			CY	269.5
CL"C" CONC(MASS)(HPC)(COL)			CY	102.5
PRESTRESS (GROUT)			MKF	392

* INCLUDES ONE WELDED SPLICE
** INCLUDES ONE 2'-1" LAP SPLICE
*** INCLUDES ONE 8'-11" LAP SPLICE

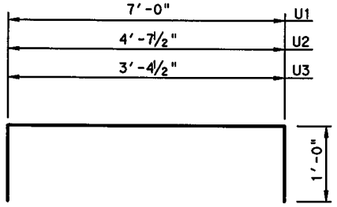

BARS U1, U2 & U3

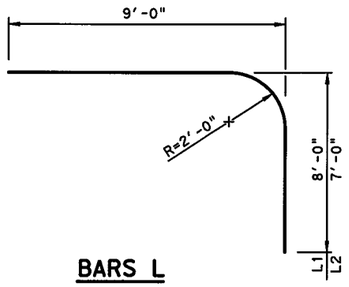

BARS L

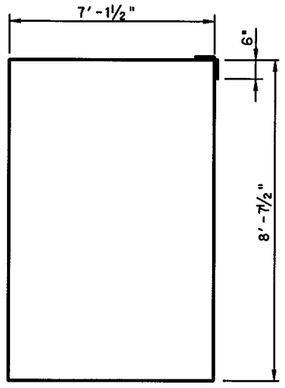

BARS S1

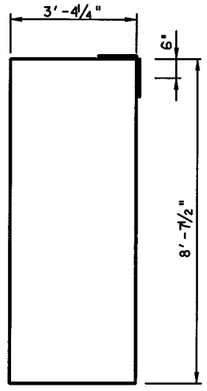

BARS S2

BARS E1 & E2

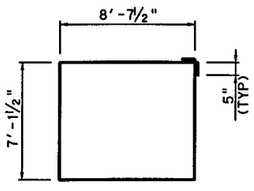

BARS Z1

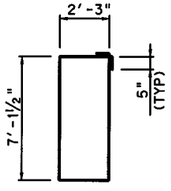

BARS Z2

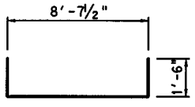

BARS Z3

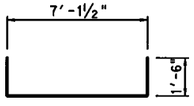

BARS Z4

THE TOP, SIDES, AND ENDS, EXCEPT UNDER BEARING AREAS, SHALL BE TREATED WITH A "CLASS II, TYPE I PENETRATING CONCRETE SURFACE TREATMENT"

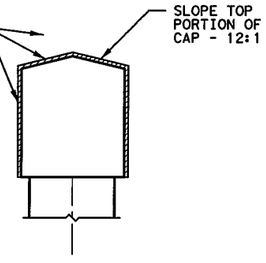

CONCRETE SURFACE TREATMENT DETAIL FOR INTERIOR BENT

7/26/12

STATE OF TEXAS
CORBETT L. FREEMAN
86913
LICENSED PROFESSIONAL ENGINEER

HL 93 LOADING

I. S. ENGINEERS, LLC
TBPE REG. # F-11657

Texas Department of Transportation
© 2012

IH 35W FROM NORTH TARRANT PKWY TO IH 820

INTERIOR BENT NO. 5
SB IH35W ENTRANCE RAMP TO MANAGED LANES

SCALE: NTS — SHEET 5 OF 5

DESIGN	FED.RD. DIV.NO.	FEDERAL AID PROJECT NO.		HIGHWAY NO.
CLF	6	(SEE TITLE SHEET)		IH 35W
GRAPHICS AXD	STATE	DISTRICT	COUNTY	SHEET NO.
CHECK SB	TEXAS	FTW	TARRANT	1580
CHECK CLF	CONTROL	SECTION	JOB	
	0014	16	255, ETC.	

DRAWING DATE: 7/28/2012 FILENAME: S38BR*BB-MLS*IB*07.dgn

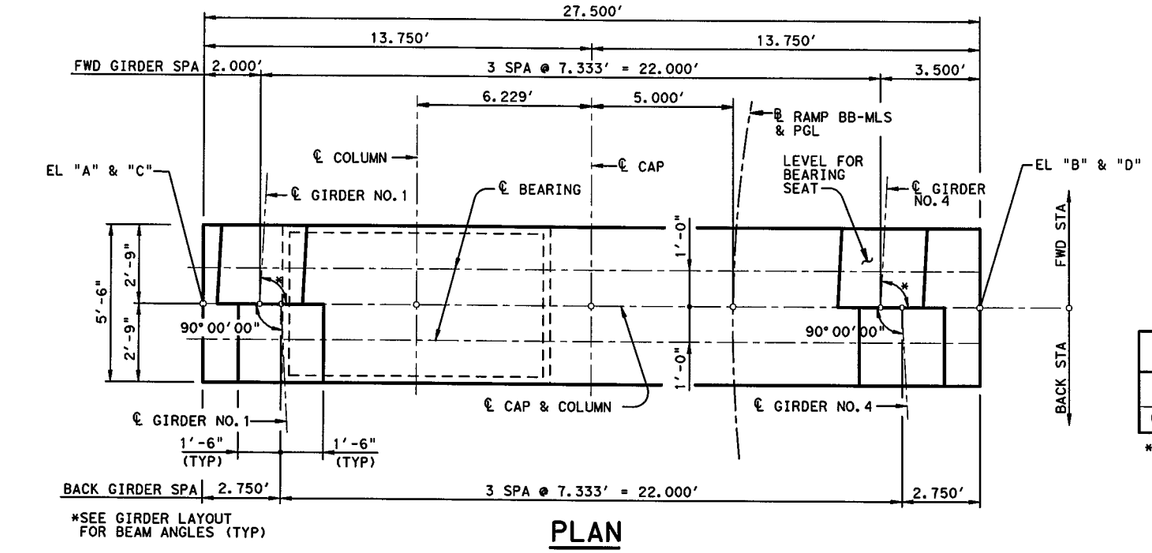

PLAN

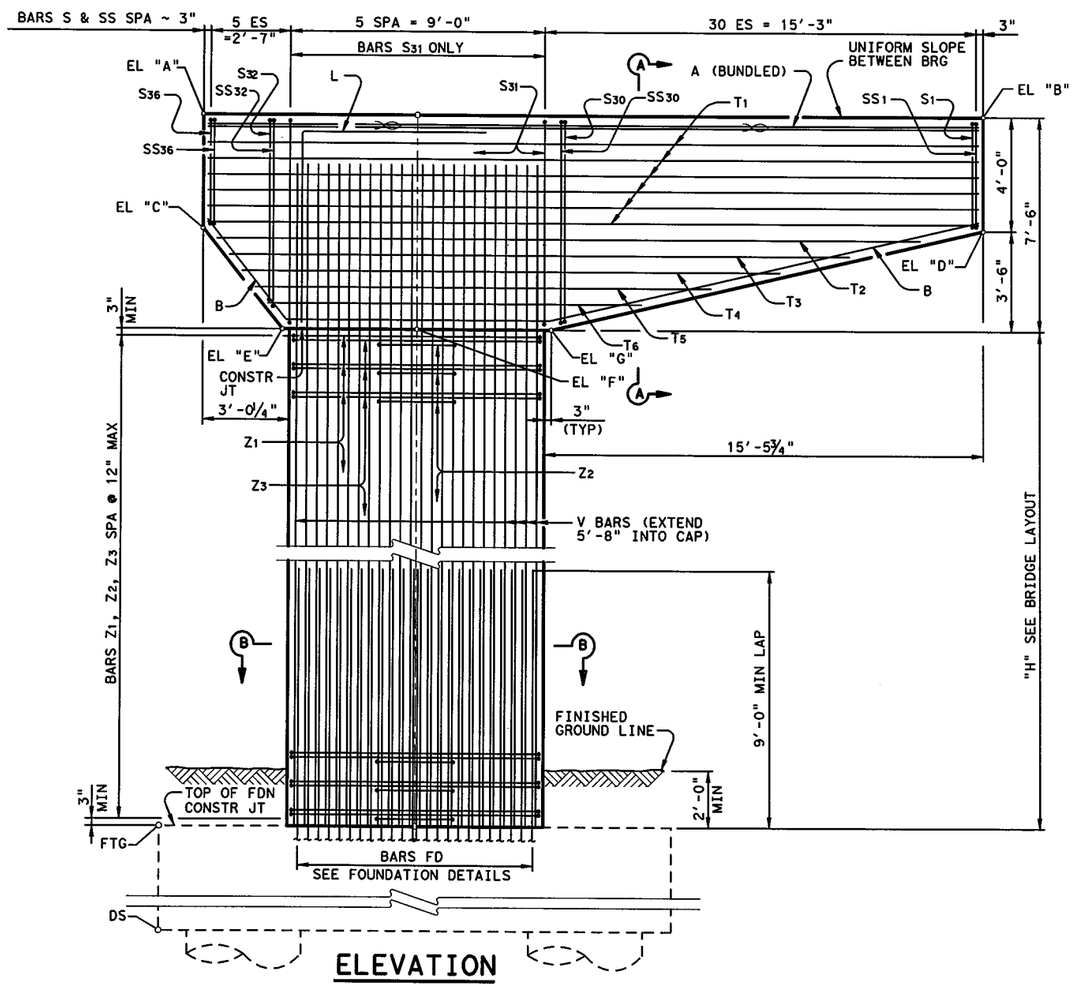

ELEVATION

GENERAL NOTES:

DESIGNED ACCORDING TO AASHTO LRFD SPECIFICATIONS, 5TH EDITION (2010).

CLASS "C" (HPC) CONCRETE STRENGTH F'C = 3,600 PSI.

ALL REINFORCING SHALL BE GRADE 60.

SEE FOUNDATION DETAILS FOR ALL FOUNDATION NOTES.

CALCULATED FOUNDATION LOAD: 677 TONS / D.S.

TABLE OF ELEVATIONS

"A"	"B"	"C"	"D"	"E"	"F"	"G"	FTG	TOP OF DS*	DS TIP	AS-BUILT DS TIP
645.128	643.780	641.128	639.780	637.480	637.259	637.039	618.259	612.259	594.259	

* TOP OF DRILLED SHAFT ELEVATIONS WERE ESTIMATED BASED ON GROUND ELEVATION INFORMATION AVAILABLE AT THE TIME OF DESIGN. CONTRACTOR SHALL CONFIRM THESE ELEVATIONS PRIOR TO DRILLING.

7/11/12

STATE OF TEXAS
CORBETT L. FREEMAN
86913
LICENSED
PROFESSIONAL ENGINEER

HL 93 LOADING

I. S. ENGINEERS, LLC
TBPE REG. # F-11657

Texas Department of Transportation
© 2012

IH 35W FROM NORTH TARRANT PKWY TO IH 820

INTERIOR BENT NO. 6
SB IH35W ENTRANCE RAMP TO MANAGED LANES

SCALE: NTS — SHEET 1 OF 2

DESIGN	FED. RD. DIV. NO.	FEDERAL AID PROJECT NO.		HIGHWAY NO.
CLF	6	(SEE TITLE SHEET)		IH 35W
GRAPHICS: AXD	STATE	DISTRICT	COUNTY	SHEET NO.
CHECK: SB	TEXAS	FTW	TARRANT	1581
CHECK: CLF	CONTROL	SECTION	JOB	
	0014	16	255, ETC.	

DRAWING DATE: 7/13/2012 FILENAME: S3BBR*BB-MLS*IB*08a.dgn

③ TABLE OF COLUMN QUANTITIES

BENT	"H"	CL. "C" CONC. (MASS) (HPC) (COL)	BARS V 76 ~ #11		BARS Z1 #4 x 27'-4"		BARS Z2 #4 x 15'-7"		BARS Z3 #4 x 9'-11"	
NO.	FT	CY	LENGTH	WT.	NO.	WT.	NO.	WT.	NO.	WT.
6	19	31.7	24'-8"	9,960	20	365	20	208	20	132

②④ TOTAL ESTIMATED QUANTITIES

REINF. STEEL	CL. "C" CONC (MASS) (HPC) (COL)	CL. "C" CONC (MASS) (HPC) (CAP)
LB	CY	CY
19,765	31.7	36.2

TABLE OF CONSTANT QUANTITIES ②

BAR	NO.	SIZE	LENGTH	WEIGHT
A	28	#11	27'-2"	4,041
B	6	#8	29'-3"	469
E1	16	#6	6'-8"	160
E2	16	#6	6'-5"	154
L	14	#11	13'-0"	967
S1-30 AVG	30	#6	22'-11"	1,033
S31	6	#6	26'-6"	239
S32-36 AVG	5	#6	22'-3"	167
SS1-30 AVG	30	#6	20'-11"	943
SS32-36 AVG	5	#6	20'-3"	152
T1	12	#6	27'-2"	490
T2-6 AVG	10	#6	19'-0"	285
REINFORCING STEEL			LBS	9,100
CL "C" CONC (MASS) (HPC) (CAP)			CY	36.2

② QUANTITIES SHOWN ARE FOR ONE BENT ONLY.

③ ADJUST BARS V LENGTH BY 1 FT AND NUMBER OF BARS Z BY 1 FOR EACH LINEAR FOOT OF VARIATION IN "H" VALUE.

④ ADJUST REINFORCING STEEL TOTAL BY 441 LBS AND CLASS "C" CONCRETE TOTAL BY 1.667 CY FOR EACH LINEAR FOOT OF VARIATION IN "H" VALUE.

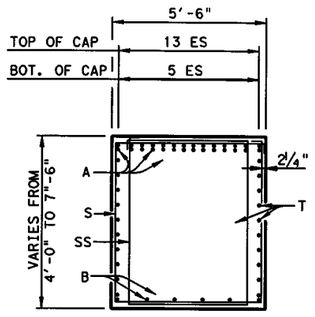

SECTION A-A

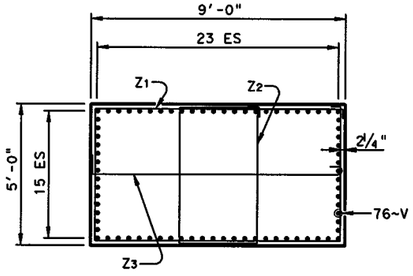

SECTION B-B

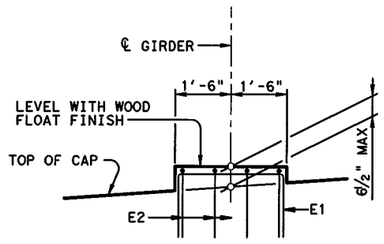

FWD SPAN

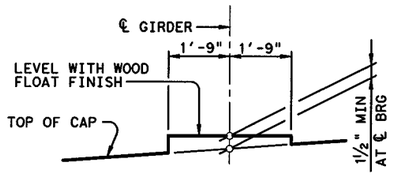

BACK SPAN

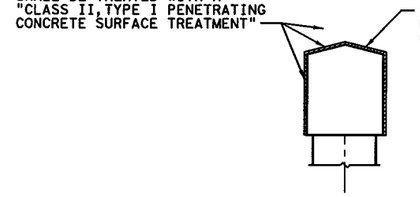

CONCRETE SURFACE TREATMENT DETAIL FOR INTERIOR BENT

BEARING SEAT DETAIL

(BEARING SURFACE SHALL BE CLEAN AND FREE OF ALL LOOSE MATERIAL BEFORE PLACING BEARING PAD.)

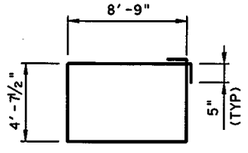

BARS Z1

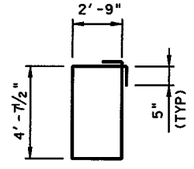

BARS Z2

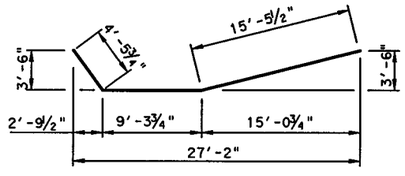

BARS B

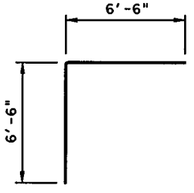

BARS L

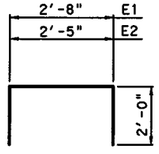

BARS E

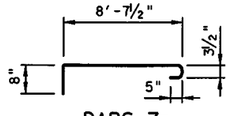

BARS Z3

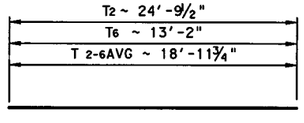

VARIABLE BARS T

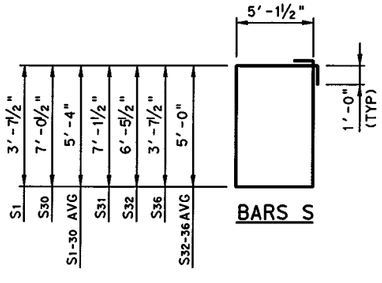

BARS S

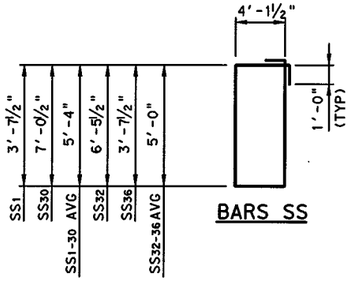

BARS SS

7/26/12

STATE OF TEXAS
CORBETT L. FREEMAN
86913
LICENSED PROFESSIONAL ENGINEER

HL 93 LOADING

I. S. ENGINEERS, LLC
TBPE REG. # F-11657

Texas Department of Transportation
© 2012

IH 35W FROM NORTH TARRANT PKWY TO IH 820

INTERIOR BENT NO. 6
SB IH35W ENTRANCE RAMP TO MANAGED LANES

SCALE: NTS — SHEET 2 OF 2

DESIGN	FED.RD. DIV.NO.	FEDERAL AID PROJECT NO.		HIGHWAY NO.
CLF	6	(SEE TITLE SHEET)		IH 35W
GRAPHICS AXD	STATE	DISTRICT	COUNTY	SHEET NO.
CHECK SB	TEXAS	FTW	TARRANT	1582
CHECK CLF	CONTROL	SECTION	JOB	
	0014	16	255, ETC.	

DRAWING DATE: 7/28/2012 FILENAME: S3BBR*BB-MLS*IB*08b.dgn

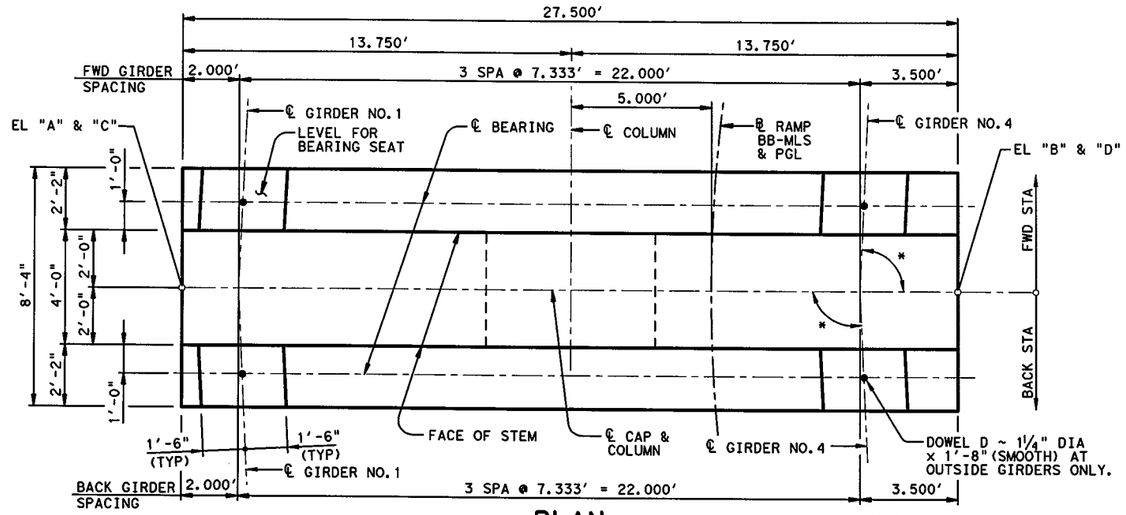

PLAN

*SEE GIRDER LAYOUT FOR BEAM ANGLES

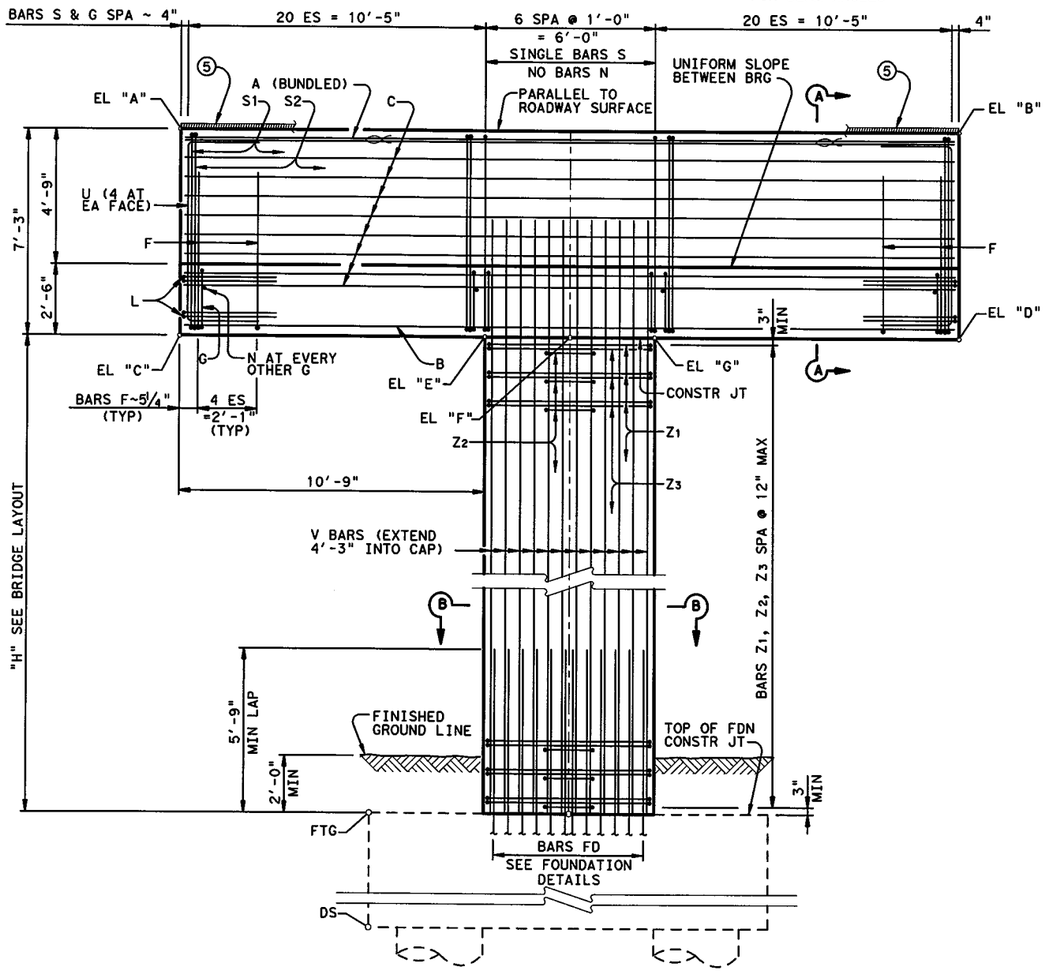

ELEVATION

GENERAL NOTES:

DESIGNED ACCORDING TO AASHTO LRFD SPECIFICATIONS, 5TH EDITION (2010).

CLASS "C" (HPC) CONCRETE STRENGTH F'C = 3,600 PSI.

ALL REINFORCING SHALL BE GRADE 60.

SEE FOUNDATION DETAILS FOR ALL FOUNDATION NOTES.

CALCULATED FOUNDATION LOAD: 355 TONS / D.S.

TABLE OF ELEVATIONS

"A"	"B"	"C"	"D"	"E"	"F"	"G"	FTG	TOP OF DS*	DS TIP	AS-BUILT DS TIP
644.609	643.259	637.359	636.009	636.832	636.684	636.537	616.684	610.684	595.684	

* TOP OF DRILLED SHAFT ELEVATIONS WERE ESTIMATED BASED ON GROUND ELEVATION INFORMATION AVAILABLE AT THE TIME OF DESIGN. CONTRACTOR SHALL CONFIRM THESE ELEVATIONS PRIOR TO DRILLING.

7/11/12

STATE OF TEXAS
CORBETT L. FREEMAN
86913
LICENSED
PROFESSIONAL ENGINEER

HL 93 LOADING

I. S. ENGINEERS, LLC
TBPE REG. # F-11657

Texas Department of Transportation
© 2012

IH 35W FROM NORTH TARRANT PKWY TO IH 820

INTERIOR BENT NO. 7
SB IH35W ENTRANCE RAMP TO MANAGED LANES

SCALE: NTS — SHEET 1 OF 2

DESIGN	FED.RD. DIV.NO.	FEDERAL AID PROJECT NO.		HIGHWAY NO.
CLF	6	(SEE TITLE SHEET)		IH 35W
GRAPHICS SPL	STATE	DISTRICT	COUNTY	SHEET NO.
CHECK SB	TEXAS	FTW	TARRANT	
CHECK CLF	CONTROL	SECTION	JOB	1583
	0014	16	255, ETC.	

DRAWING DATE: 7/13/2012 FILENAME: S3BBR*BB-MLS*IB*09a.dgn

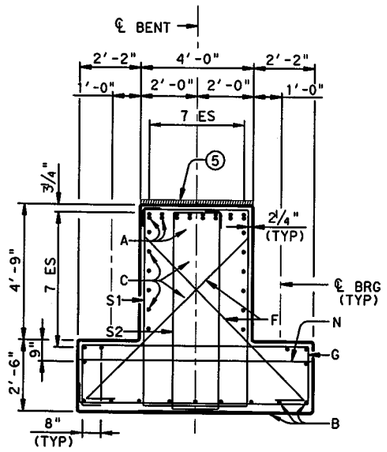

SECTION A-A

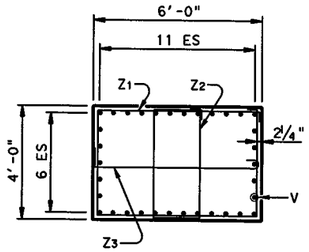

SECTION B-B

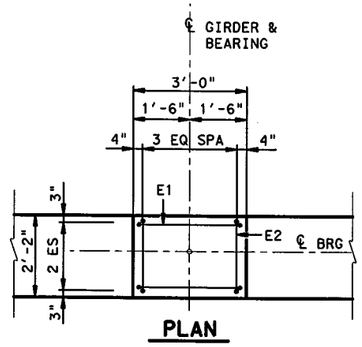

PLAN

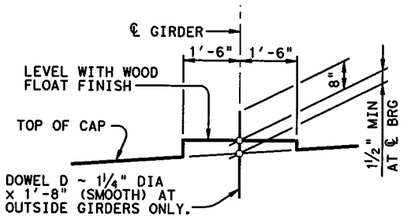

BEARING SEAT DETAIL - FWD SPAN

(BEARING SURFACE SHALL BE CLEAN AND FREE OF ALL LOOSE MATERIAL BEFORE PLACING BEARING PAD.)

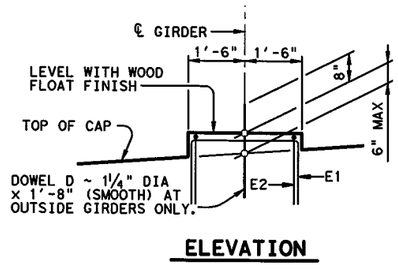

ELEVATION

BEARING SEAT DETAIL - BACK SPAN

(BEARING SURFACE SHALL BE CLEAN AND FREE OF ALL LOOSE MATERIAL BEFORE PLACING BEARING PAD.)

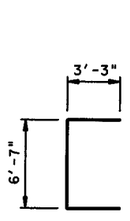

BARS L

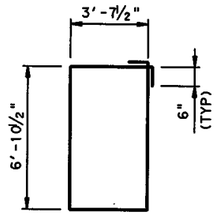

BARS S1

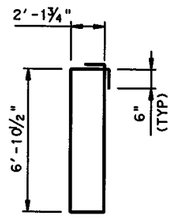

BARS S2

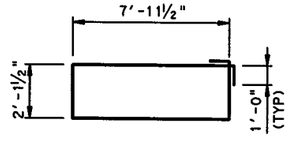

BARS G

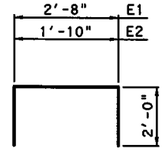

BARS E

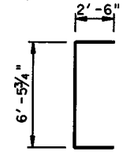

BARS U

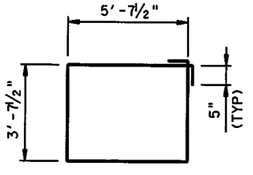

BARS Z1

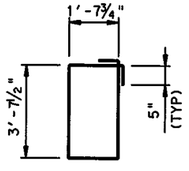

BARS Z2

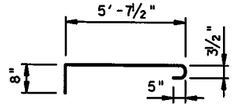

BARS Z3

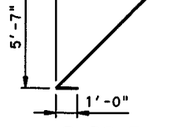

BARS F

③ TABLE OF COLUMN QUANTITIES

BENT	"H"	CL. "C" CONC. (HPC) (COL)	BARS V 34 ~ #10		BARS Z1 #4 x 19'-4"		BARS Z2 #4 x 11'-5"		BARS Z3 #4 x 6'-11"	
NO.	FT	CY	LENGTH	WT.	NO.	WT.	NO.	WT.	NO.	WT.
7	20	17.8	24'-3"	3,548	21	271	21	160	21	97

②④ TOTAL ESTIMATED QUANTITIES

REINF. STEEL	CL. "C" CONC. (HPC) (BENT)
LB	CY
12,486	59.0

TABLE OF CONSTANT QUANTITIES ②

BAR	No.	SIZE	LENGTH	WEIGHT
A	16	#11	27'-2"	2,309
B	9	#8	27'-2"	653
C	18	#7	27'-2"	1,000
E1	12	#6	6'-8"	120
E2	16	#6	5'-10"	140
D	4	1 1/4" Ø	1'-8"	28
F	20	#5	8'-11"	186
G	47	#6	22'-2"	1,565
L	8	#6	13'-1"	157
N	20	#6	8'-0"	240
S1	47	#5	22'-0"	1,078
S2	40	#5	19'-1"	796
U	8	#6	11'-6"	138
REINFORCING STEEL			LBS	8,410
CL"C" CONCRETE (HPC) (CAP)			CY	41.2

THE FRONT AND BACK, STEM FACES, SIDES, AND TOP, EXCEPT UNDER BEARING AREAS, SHALL BE TREATED WITH A "CLASS II, TYPE I PENETRATING CONCRETE SURFACE TREATMENT".

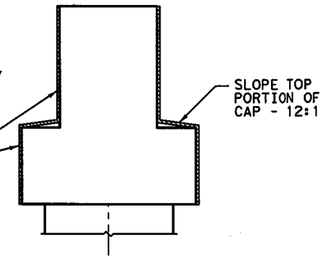

CONCRETE SURFACE TREATMENT DETAIL FOR INV.-TEE BENT

② QUANTITIES SHOWN ARE FOR ONE BENT ONLY.

③ ADJUST BARS V LENGTH BY 1 FT AND NUMBER OF BARS Z BY 1 FOR EACH LINEAR FOOT OF VARIATION IN "H" VALUE.

④ ADJUST REINFORCING STEEL TOTAL BY 173 LBS AND CLASS "C" CONCRETE TOTAL BY 0.889 CY FOR EACH LINEAR FOOT OF VARIATION IN "H" VALUE.

⑤ 1/2" PREFORMED BITUMINOUS FIBER MATERIAL TO BE USED ON TOP OF STEM.

7/11/12

STATE OF TEXAS
CORBETT L. FREEMAN
86913
LICENSED
PROFESSIONAL ENGINEER

HL 93 LOADING

I. S. ENGINEERS, LLC
TBPE REG. # F-11657

Texas Department of Transportation
© 2012

IH 35W FROM NORTH TARRANT PKWY TO IH 820

INTERIOR BENT NO. 7

SB IH35W ENTRANCE RAMP TO MANAGED LANES

SCALE: NTS — SHEET 2 OF 2

DESIGN	FED. RD. DIV. NO.	FEDERAL AID PROJECT NO.		HIGHWAY NO.
CLF	6	(SEE TITLE SHEET)		IH 35W
GRAPHICS SPL	STATE	DISTRICT	COUNTY	SHEET NO.
CHECK SB	TEXAS	FTW	TARRANT	
CHECK CLF	CONTROL 0014	SECTION 16	JOB 255, ETC.	1584

DRAWING DATE: 7/13/2012 FILENAME: S38BR*BB-MLS*IB*09b.dgn

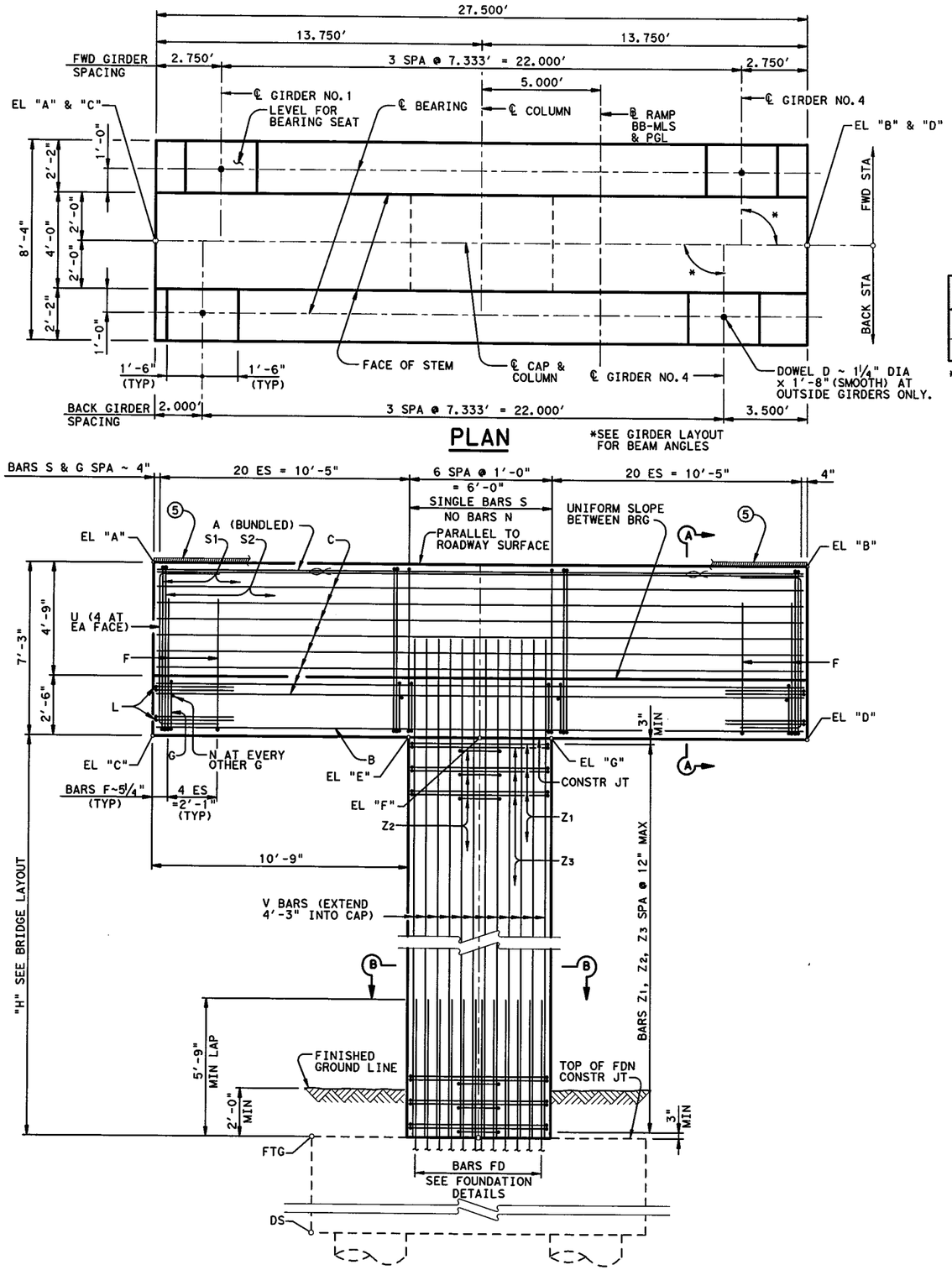

GENERAL NOTES:

DESIGNED ACCORDING TO AASHTO LRFD SPECIFICATIONS, 5TH EDITION (2010).

CLASS "C" (HPC) CONCRETE STRENGTH F'C = 3,600 PSI.

ALL REINFORCING SHALL BE GRADE 60.

SEE FOUNDATION DETAILS FOR ALL FOUNDATION NOTES.

CALCULATED FOUNDATION LOAD: 355 TONS / D.S.

TABLE OF ELEVATIONS

"A"	"B"	"C"	"D"	"E"	"F"	"G"	FTG	TOP OF DS*	DS TIP	AS-BUILT DS TIP
638.657	637.730	631.407	630.480	631.045	630.944	630.842	614.944	608.944	588.944	

* TOP OF DRILLED SHAFT ELEVATIONS WERE ESTIMATED BASED ON GROUND ELEVATION INFORMATION AVAILABLE AT THE TIME OF DESIGN. CONTRACTOR SHALL CONFIRM THESE ELEVATIONS PRIOR TO DRILLING.

7/11/12

STATE OF TEXAS
CORBETT L. FREEMAN
86913
LICENSED
PROFESSIONAL ENGINEER

HL 93 LOADING

I. S. ENGINEERS, LLC
TBPE REG. # F-11657

Texas Department of Transportation
© 2012

IH 35W FROM NORTH TARRANT PKWY TO IH 820

INTERIOR BENT NO. 8
SB IH35W ENTRANCE RAMP TO MANAGED LANES

SCALE: NTS — SHEET 1 OF 2

DESIGN	FED.RD. DIV.NO.	FEDERAL AID PROJECT NO.		HIGHWAY NO.
CLF	6	(SEE TITLE SHEET)		IH 35W
GRAPHICS	STATE	DISTRICT	COUNTY	SHEET NO.
SPL	TEXAS	FTW	TARRANT	
CHECK	CONTROL*	SECTION	JOB	1585
SB	0014	16	255, ETC.	
CHECK				
CLF				

DRAWING DATE: 7/13/2012 FILENAME: S3BBR*BB-MLS*IB*10a.dgn

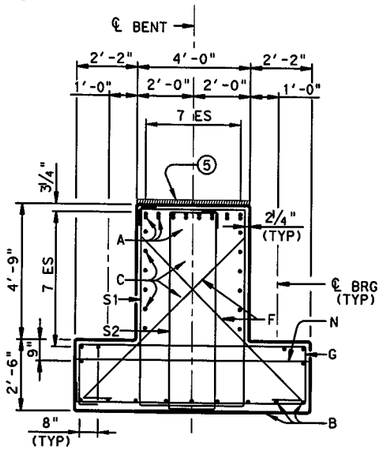

SECTION A-A

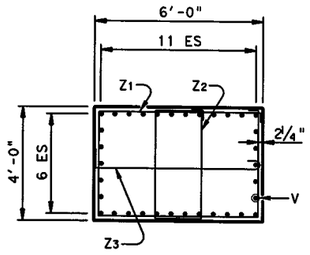

SECTION B-B

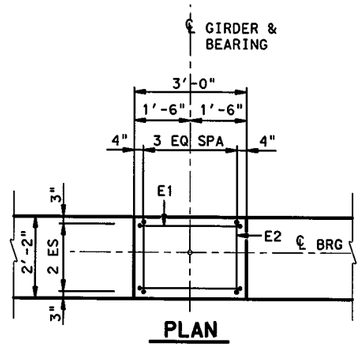

PLAN

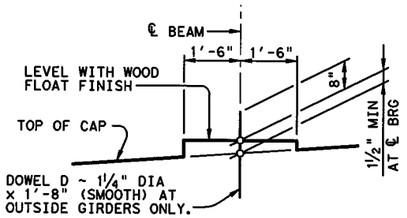

BEARING SEAT DETAIL - FWD SPAN

(BEARING SURFACE SHALL BE CLEAN AND FREE OF ALL LOOSE MATERIAL BEFORE PLACING BEARING PAD.)

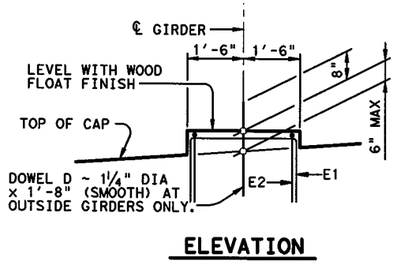

ELEVATION

BEARING SEAT DETAIL - BACK SPAN

(BEARING SURFACE SHALL BE CLEAN AND FREE OF ALL LOOSE MATERIAL BEFORE PLACING BEARING PAD.)

THE FRONT AND BACK, STEM FACES, SIDES, AND TOP, EXCEPT UNDER BEARING AREAS, SHALL BE TREATED WITH A "CLASS II, TYPE I PENETRATING CONCRETE SURFACE TREATMENT".

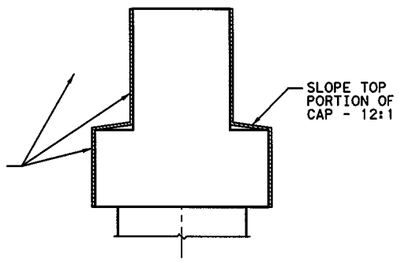

CONCRETE SURFACE TREATMENT DETAIL FOR INV.-TEE BENT

③ TABLE OF COLUMN QUANTITIES

BENT	"H"	CL. "C" CONC. (HPC) (COL)	BARS V 34 ~ #10		BARS Z1 #4 x 19'-4"		BARS Z2 #4 x 11'-5"		BARS Z3 #4 x 6'-11"	
NO.	FT	CY	LENGTH	WT.	NO.	WT.	NO.	WT.	NO.	WT.
8	16	14.2	20'-3"	2,963	17	220	17	130	17	79

②④ TOTAL ESTIMATED QUANTITIES

REINF. STEEL	CL. "C" CONC. (HPC) (BENT)
LB	CY
11,802	55.4

TABLE OF CONSTANT QUANTITIES ②

BAR	No.	SIZE	LENGTH	WEIGHT
A	16	#11	27'-2"	2,309
B	9	#8	27'-2"	653
C	18	#7	27'-2"	1,000
E1	12	#6	6'-8"	120
E2	16	#6	5'-10"	140
D	4	1 1/4" ∅	1'-8"	28
F	20	#5	8'-11"	186
G	47	#6	22'-2"	1,565
L	8	#6	13'-1"	157
N	20	#6	8'-0"	240
S1	47	#5	22'-0"	1,078
S2	40	#5	19'-1"	796
U	8	#6	11'-6"	138
REINFORCING STEEL			LBS	8,410
CL "C" CONCRETE (HPC) (CAP)			CY	41.2

② QUANTITIES SHOWN ARE FOR ONE BENT ONLY.

③ ADJUST BARS V LENGTH BY 1 FT AND NUMBER OF BARS Z BY 1 FOR EACH LINEAR FOOT OF VARIATION IN "H" VALUE.

④ ADJUST REINFORCING STEEL TOTAL BY 173 LBS AND CLASS "C" CONCRETE TOTAL BY 0.889 CY FOR EACH LINEAR FOOT OF VARIATION IN "H" VALUE.

⑤ 1/2" PREFORMED BITUMINOUS FIBER MATERIAL TO BE USED ON TOP OF STEM.

7/11/12

STATE OF TEXAS
CORBETT L. FREEMAN
86913
LICENSED
PROFESSIONAL ENGINEER

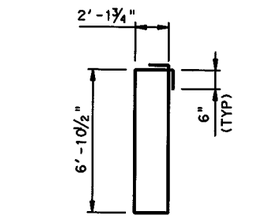

BARS L

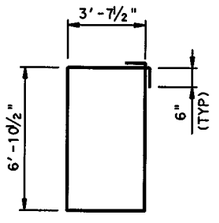

BARS S1

BARS S2

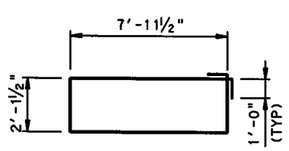

BARS G

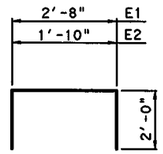

BARS E

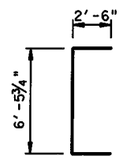

BARS U

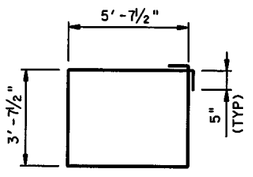

BARS Z1

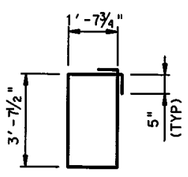

BARS Z2

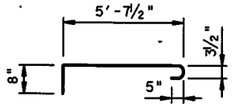

BARS Z3

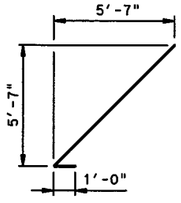

BARS F

HL 93 LOADING

I. S. ENGINEERS, LLC
TBPE REG. # F-11657

Texas Department of Transportation
© 2012

IH 35W FROM NORTH TARRANT PKWY TO IH 820

INTERIOR BENT NO. 8

SB IH35W ENTRANCE RAMP TO MANAGED LANES

SCALE: NTS — SHEET 2 OF 2

DESIGN	FED.RD. DIV.NO.	FEDERAL AID PROJECT NO.		HIGHWAY NO.
CLF	6	(SEE TITLE SHEET)		IH 35W
GRAPHICS SPL	STATE	DISTRICT	COUNTY	SHEET NO.
CHECK SB	TEXAS	FTW	TARRANT	
CHECK CLF	CONTROL 0014	SECTION 16	JOB 255, ETC.	1586

FILENAME: S3BBR*BB-MLS*IB*10b.dgn

DRAWING DATE: 7/13/2012

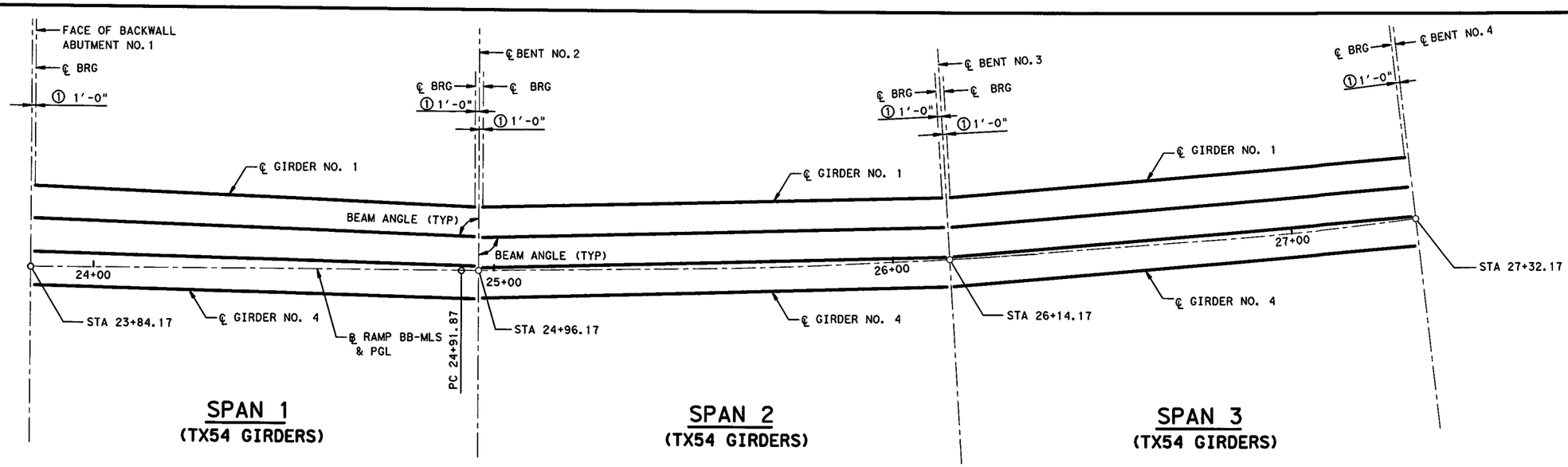

① SEE IGEB STANDARD FOR ORIENTATION OF DIMENSION.

② GIRDER LENGTHS SHOWN ARE BOTTOM OF GIRDER FLANGE LENGTHS WITH ADJUSTMENTS MADE FOR BEAM SLOPE.

BENT REPORT

BENT NO. 1 (S 72 51 36.99 W)
DISTANCE BETWEEN STATION LINE AND BEAM 1 20.440 L

			BEAM SPAC. (C.L. BENT)	BEAM ANGLE D M S
SPAN 1	BEAM	1	0.000	87 34 22
	BEAM	2	8.268	88 3 24
	BEAM	3	8.268	88 32 26
	BEAM	4	8.268	89 1 29
	TOTAL		24.805	

BENT NO. 2 (S 72 44 34.59 W)
DISTANCE BETWEEN STATION LINE AND BEAM 1 15.690 L

			BEAM SPAC. (C.L. BENT)	BEAM ANGLE D M S
SPAN 1	BEAM	1	0.000	87 27 19
	BEAM	2	7.322	87 56 21
	BEAM	3	7.322	88 25 24
	BEAM	4	7.322	88 54 27
	TOTAL		21.965	

BENT NO. 2 (S 72 44 34.59 W)
DISTANCE BETWEEN STATION LINE AND BEAM 1 15.690 L

			BEAM SPAC. (C.L. BENT)	BEAM ANGLE D M S
SPAN 2	BEAM	1	0.000	88 36 19
	BEAM	2	7.488	88 31 44
	BEAM	3	7.488	88 27 11
	BEAM	4	7.488	88 22 40
	TOTAL		22.465	

BENT NO. 3 (S 69 31 24.47 W)
DISTANCE BETWEEN STATION LINE AND BEAM 1 15.250 L

			BEAM SPAC. (C.L. BENT)	BEAM ANGLE D M S
SPAN 2	BEAM	1	0.000	88 10 30
	BEAM	2	7.333	88 15 5
	BEAM	3	7.333	88 19 37
	BEAM	4	7.333	88 24 8
	TOTAL		22.000	

BENT NO. 3 (S 69 31 24.47 W)
DISTANCE BETWEEN STATION LINE AND BEAM 1 15.250 L

			BEAM SPAC. (C.L. BENT)	BEAM ANGLE D M S
SPAN 3	BEAM	1	0.000	88 23 24
	BEAM	2	7.333	88 23 24
	BEAM	3	7.333	88 23 24
	BEAM	4	7.333	88 23 24
	TOTAL		22.000	

BENT NO. 4 (S 66 18 14.35 W)
DISTANCE BETWEEN STATION LINE AND BEAM 1 15.250 L

			BEAM SPAC. (C.L. BENT)	BEAM ANGLE D M S
SPAN 3	BEAM	1	0.000	88 23 24
	BEAM	2	7.333	88 23 24
	BEAM	3	7.333	88 23 24
	BEAM	4	7.333	88 23 24
	TOTAL		22.000	

BEAM REPORT

BEAM REPORT, SPAN 1

	C-C BENT	HORIZONTAL DISTANCE C-C BRG.	TRUE DISTANCE ② BOT. BM.	FLG.
BEAM 1	112.068	110.067	111.58	0.0137
BEAM 2	112.047	110.046	111.56	0.0164
BEAM 3	112.034	110.033	111.55	0.0192
BEAM 4	112.029	110.029	111.56	0.0219

BEAM REPORT, SPAN 2

	C-C BENT	HORIZONTAL DISTANCE C-C BRG.	TRUE DISTANCE ② BOT. BM.	FLG.
BEAM 1	117.116	115.115	116.63	0.0153
BEAM 2	117.532	115.531	117.05	0.0164
BEAM 3	117.948	115.947	117.47	0.0175
BEAM 4	118.364	116.364	117.88	0.0186

BEAM REPORT, SPAN 3

	C-C BENT	HORIZONTAL DISTANCE C-C BRG.	TRUE DISTANCE ② BOT. BM.	FLG.
BEAM 1	117.128	115.127	116.63	0.0061
BEAM 2	117.540	115.539	117.04	0.0057
BEAM 3	117.952	115.951	117.45	0.0052
BEAM 4	118.364	116.363	117.87	0.0047

7/11/12
STATE OF TEXAS
CORBETT L. FREEMAN
86913
LICENSED
PROFESSIONAL ENGINEER

HL 93 LOADING

I. S. ENGINEERS, LLC
TBPE REG. # F-11657

Texas Department of Transportation
© 2012

IH 35W FROM NORTH TARRANT PKWY TO IH 820

GIRDER LAYOUT (SPANS 1-3)

SB IH35W ENTRANCE RAMP TO MANAGED LANES

SCALE: 1" = 30' SHEET 1 OF 2

DESIGN	FED.RD. DIV.NO.	FEDERAL AID PROJECT NO.		HIGHWAY NO.
CLF	6	(SEE TITLE SHEET)		IH 35W
GRAPHICS SPL	STATE	DISTRICT	COUNTY	SHEET NO.
CHECK SB	TEXAS	FTW	TARRANT	
CHECK CLF	CONTROL	SECTION	JOB	1587
	0014	16	255, ETC.	

DRAWING DATE: 7/13/2012 FILENAME: S3BBR*BB-MLS*GF*01.dgn

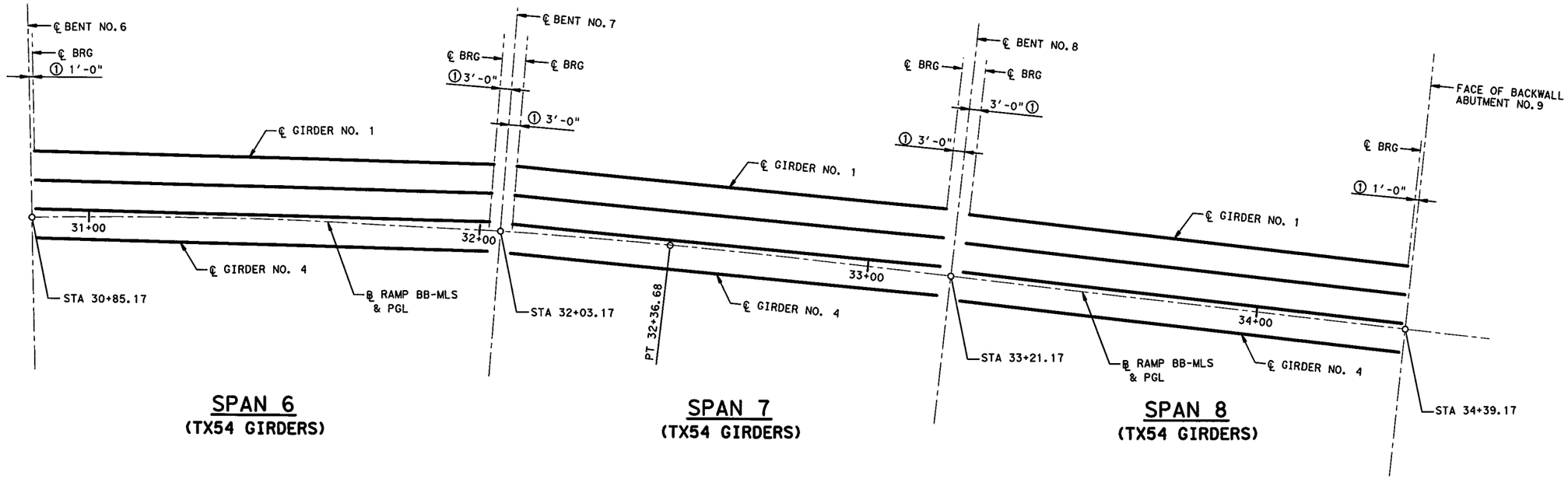

SPAN 6
(TX54 GIRDERS)

SPAN 7
(TX54 GIRDERS)

SPAN 8
(TX54 GIRDERS)

BENT REPORT

BENT NO. 6 (S 71 52 31.05 W)
DISTANCE BETWEEN STATION LINE AND BEAM 1 16.750 L

		BEAM	BEAM SPAC. (C.L. BENT)	BEAM ANGLE D M S
SPAN	6	BEAM 1	0.000	87 53 13
		BEAM 2	7.333	87 53 13
		BEAM 3	7.333	87 53 13
		BEAM 4	7.333	87 53 13
		TOTAL	22.000	

BENT NO. 7 (S 76 6 3.08 W)
DISTANCE BETWEEN STATION LINE AND BEAM 1 16.750 L

		BEAM	BEAM SPAC. (C.L. BENT)	BEAM ANGLE D M S
SPAN	6	BEAM 1	0.000	87 53 13
		BEAM 2	7.333	87 53 13
		BEAM 3	7.333	87 53 13
		BEAM 4	7.333	87 53 13
		TOTAL	22.000	

BENT NO. 7 (S 76 6 3.08 W)
DISTANCE BETWEEN STATION LINE AND BEAM 1 16.750 L

		BEAM	BEAM SPAC. (C.L. BENT)	BEAM ANGLE D M S
SPAN	7	BEAM 1	0.000	87 59 40
		BEAM 2	7.333	87 59 35
		BEAM 3	7.333	87 59 31
		BEAM 4	7.333	87 59 26
		TOTAL	22.000	

BENT NO. 8 (S 79 23 13.68 W)
DISTANCE BETWEEN STATION LINE AND BEAM 1 16.750 L

		BEAM	BEAM SPAC. (C.L. BENT)	BEAM ANGLE D M S
SPAN	7	BEAM 1	0.000	88 43 9
		BEAM 2	7.333	88 43 13
		BEAM 3	7.333	88 43 18
		BEAM 4	7.333	88 43 23
		TOTAL	22.000	

BENT NO. 8 (S 79 23 13.68 W)
DISTANCE BETWEEN STATION LINE AND BEAM 1 16.000 L

		BEAM	BEAM SPAC. (C.L. BENT)	BEAM ANGLE D M S
SPAN	8	BEAM 1	0.000	90 0 0
		BEAM 2	7.333	90 0 0
		BEAM 3	7.333	90 0 0
		BEAM 4	7.333	90 0 0
		TOTAL	22.000	

BENT NO. 9 (S 79 23 13.68 W)
DISTANCE BETWEEN STATION LINE AND BEAM 1 16.000 L

		BEAM	BEAM SPAC. (C.L. BENT)	BEAM ANGLE D M S
SPAN	8	BEAM 1	0.000	90 0 0
		BEAM 2	7.333	90 0 0
		BEAM 3	7.333	90 0 0
		BEAM 4	7.333	90 0 0
		TOTAL	22.000	

BEAM REPORT

BEAM REPORT, SPAN 6

	HORIZONTAL DISTANCE C-C BENT	C-C BRG.	TRUE DISTANCE ② BOT. BM. FLG.	
BEAM 1	119.208	115.206	116.83	-0.0460
BEAM 2	118.668	114.665	116.29	-0.0462
BEAM 3	118.127	114.124	115.75	-0.0464
BEAM 4	117.586	113.583	115.21	-0.0466

BEAM REPORT, SPAN 7

	HORIZONTAL DISTANCE C-C BENT	C-C BRG.	TRUE DISTANCE ② BOT. BM. FLG.	
BEAM 1	118.940	112.937	114.58	-0.0497
BEAM 2	118.519	112.516	114.15	-0.0489
BEAM 3	118.099	112.096	113.73	-0.0482
BEAM 4	117.678	111.675	113.30	-0.0474

BEAM REPORT, SPAN 8

	HORIZONTAL DISTANCE C-C BENT	C-C BRG.	TRUE DISTANCE ② BOT. BM. FLG.	
BEAM 1	118.000	114.000	115.64	-0.0499
BEAM 2	118.000	114.000	115.64	-0.0490
BEAM 3	118.000	114.000	115.63	-0.0482
BEAM 4	118.000	114.000	115.63	-0.0473

① SEE IGEB STANDARD FOR ORIENTATION OF DIMENSION.

② GIRDER LENGTHS SHOWN ARE BOTTOM OF GIRDER FLANGE LENGTHS WITH ADJUSTMENTS MADE FOR BEAM SLOPE.

7/11/12
STATE OF TEXAS
CORBETT L. FREEMAN
86913
LICENSED
PROFESSIONAL ENGINEER

HL 93 LOADING

I. S. ENGINEERS, LLC
TBPE REG. # F-11657

Texas Department of Transportation
© 2012

IH 35W FROM NORTH TARRANT PKWY TO IH 820

GIRDER LAYOUT (SPANS 6, 7 & 8)

SB IH35W ENTRANCE RAMP TO MANAGED LANES

SCALE: 1" = 30' SHEET 2 OF 2

DESIGN	FED.RD. DIV.NO.	FEDERAL AID PROJECT NO.		HIGHWAY NO.
CLF	6	(SEE TITLE SHEET)		IH 35W
GRAPHICS SPL	STATE	DISTRICT	COUNTY	SHEET NO.
CHECK SB	TEXAS	FTW	TARRANT	1588
CHECK CLF	CONTROL	SECTION	JOB	
	0014	16	255, ETC.	

DRAWING DATE: 7/13/2012 FILENAME: S3BBR*BB-MLS*GF*02.dgn

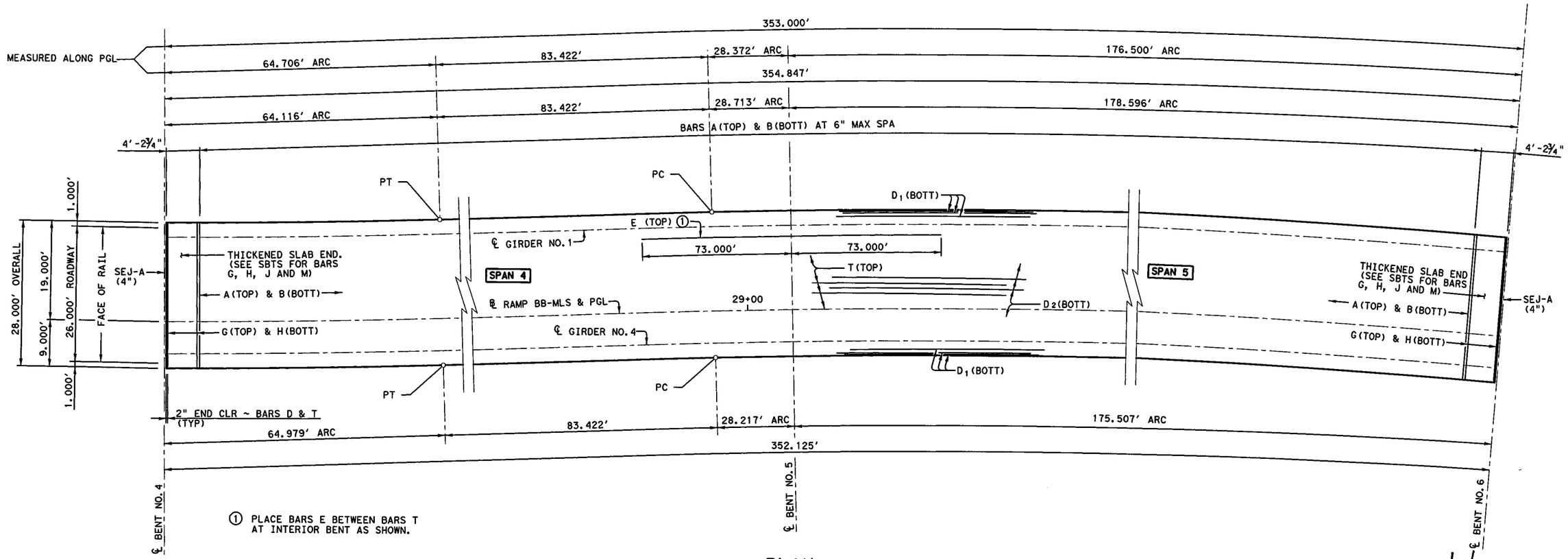

PLAN

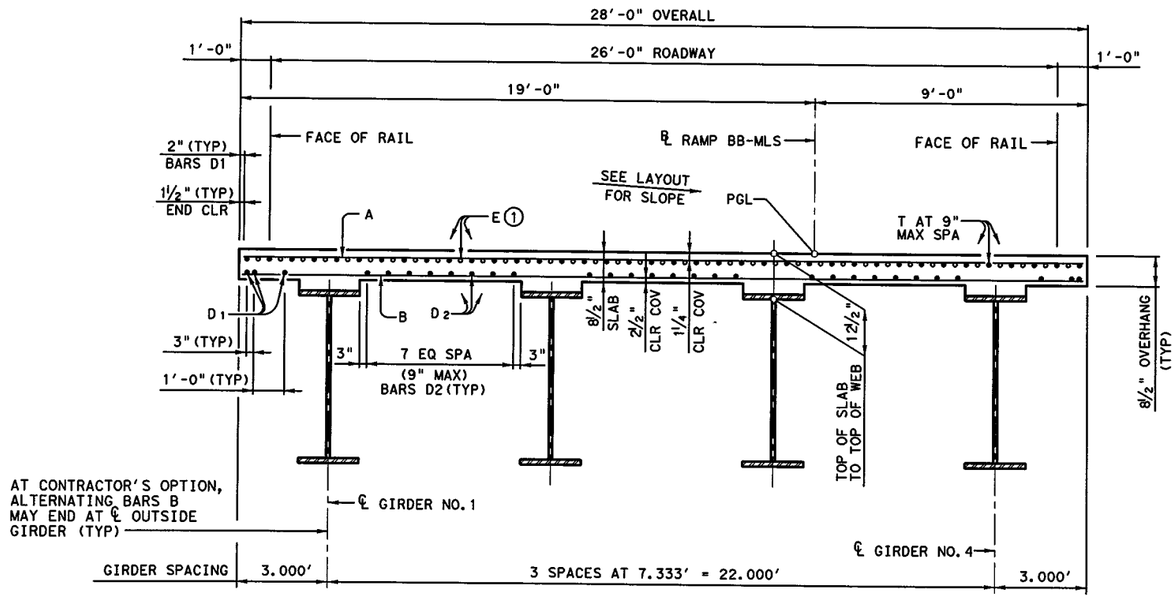

TYPICAL TRANSVERSE SECTION

GENERAL NOTES:

1. DESIGNED ACCORDING TO AASHTO LRFD BRIDGE DESIGN SPECIFICATION, 5TH EDITION (2010).
2. SEE STANDARD SBTS FOR THICKENED SLAB END DETAILS AND QUANTITY ADJUSTMENTS.
3. PRESTRESSED CONCRETE PANELS (PCP) SHALL NOT BE PERMITTED.
4. SEE PMDF STANDARD FOR OPTIONAL STAY IN PLACE FORMING DETAILS.
5. SEE STANDARD SGMD FOR MISCELLANEOUS DETAILS.
6. SEE STANDARD SGEB FOR BEARING DETAILS.
7. ALL REINFORCING STEEL SHALL BE GRADE 60 AND EPOXY COATED.
8. CLASS "S"(HPC) CONCRETE STRENGTH F'C = 4,000 PSI.
9. BAR LAPS, WHERE REQUIRED, SHALL BE AS FOLLOWS:
   EPOXY COATED ~ #4 = 2'-1"
   #5 = 2'-7"

7/14/17

STATE OF TEXAS
CORBETT L. FREEMAN
86913
LICENSED
PROFESSIONAL ENGINEER

HL 93 LOADING

I. S. ENGINEERS, LLC
TBPE REG. # F-11657

Texas Department of Transportation
© 2012

IH 35W FROM NORTH TARRANT PKWY TO IH 820

353.00'
PLATE GIRDER UNIT
SB IH35W ENTRANCE RAMP TO MANAGED LANES

SCALE: NTS — SHEET 1 OF 6

DESIGN	FED.RD. DIV.NO.	FEDERAL AID PROJECT NO.		HIGHWAY NO.
CLF	6	(SEE TITLE SHEET)		IH 35W
GRAPHICS AXD	STATE	DISTRICT	COUNTY	SHEET NO.
CHECK KT	TEXAS	FTW	TARRANT	
CHECK CLF	CONTROL 0014	SECTION 16	JOB 255, ETC.	1589

DRAWING DATE: 7/13/2012 FILENAME: S3BBR*BB-MLS*SG*01.dgn

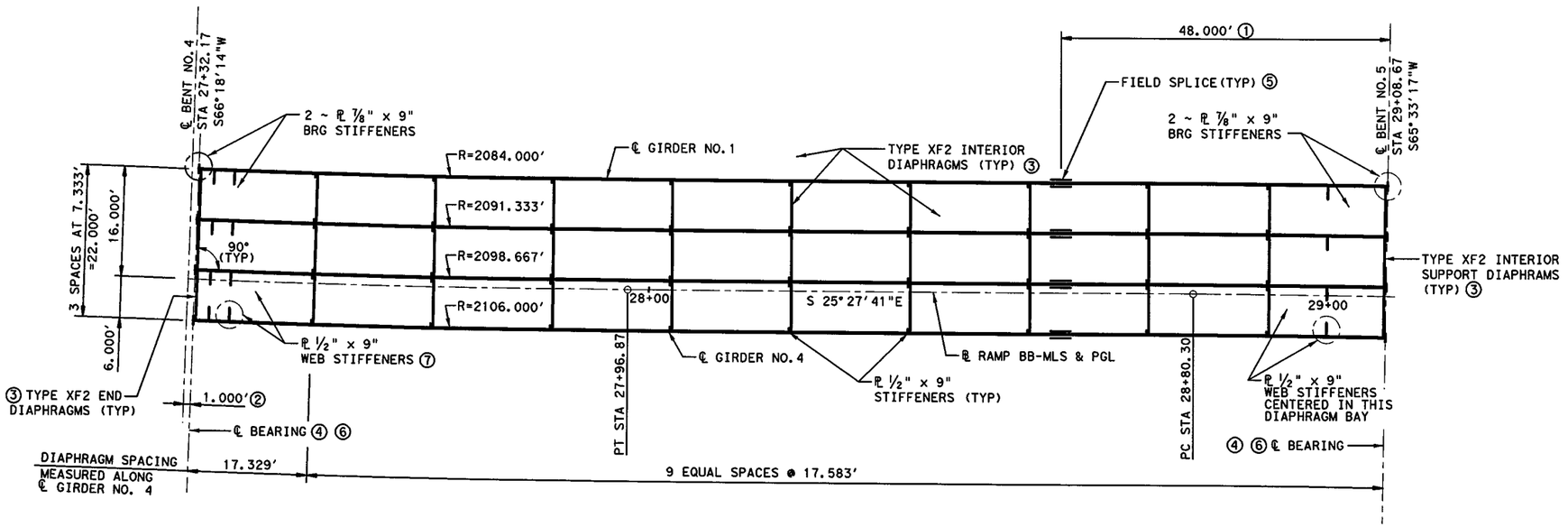

FRAMING PLAN SPAN 4

TYPE OF CROSS-FRAMES MEMBER SIZES ③

MEMBER	TYPE "XF2" END CROSS-FRAMES	TYPE "XF2" INTERIOR CROSS-FRAMES
TOP CHORD	5" x 5" x ½"	5" x 5" x ½"
BOTTOM CHORD	5" x 5" x ½"	5" x 5" x ½"
DIAGONALS	5" x 5" x ½"	5" x 5" x ½"

NOTES:

① MEASURED ALONG ℞ RAMP BB-MLS.
② MEASURED PERPENDICULAR TO ℄ BENT.
③ SEE SGMD STANDARDS FOR ADDITIONAL DETAILS.
④ SEE SGEB STANDARDS FOR BEARING DETAILS.
⑤ SEE BOLTED FIELD SPLICE DETAILS ON SHEETS 5 OF 6.
⑥ SEE GIRDER ELEVATIONS ON SHEETS 3 AND 4 OF 6 FOR BEARING TYPES.
⑦ SEE GIRDER ELEVATIONS ON SHEETS 3 AND 4 OF 6 FOR LOCATION OF WEB STIFFENERS ON DAPPED END.

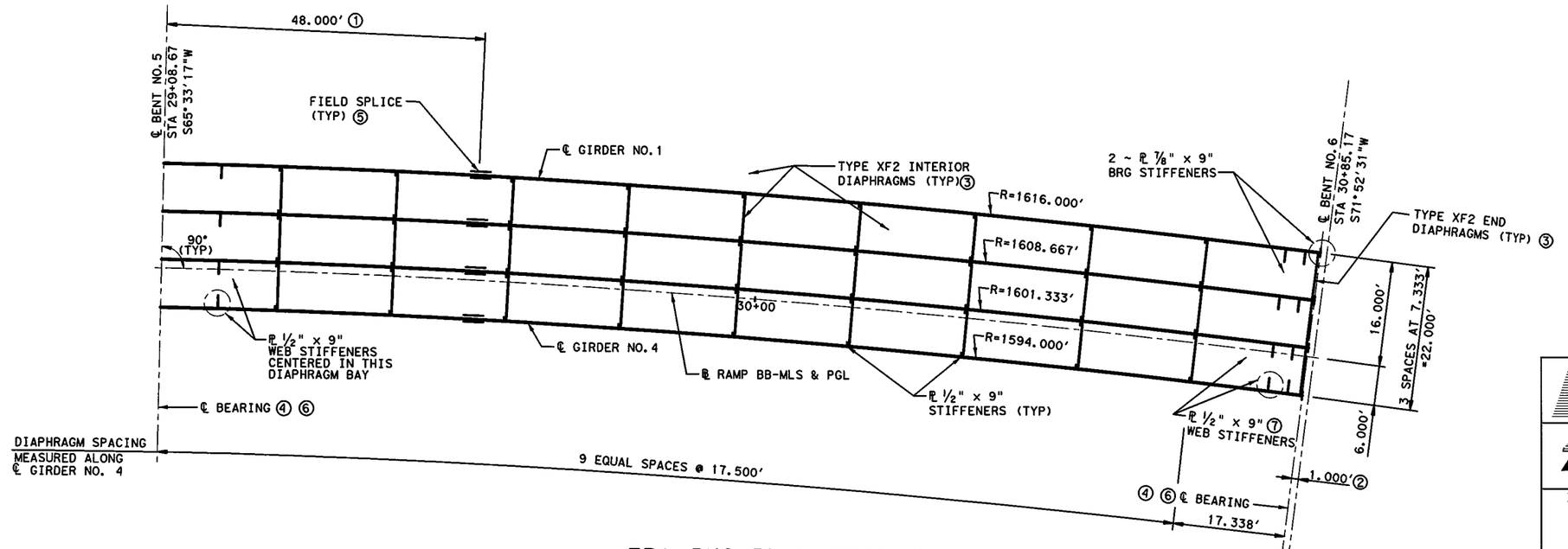

FRAMING PLAN SPAN 5

7/11/12
STATE OF TEXAS
CORBETT L. FREEMAN
86913
LICENSED
PROFESSIONAL ENGINEER

HL 93 LOADING

I. S. ENGINEERS, LLC
TBPE REG. # F-11657

Texas Department of Transportation
© 2012

IH 35W FROM NORTH TARRANT PKWY TO IH 820
353.00'
PLATE GIRDER UNIT
SB IH35W ENTRANCE RAMP
TO MANAGED LANES

SCALE: 1" = 20' SHEET 2 OF 6

DESIGN	FED.RD. DIV.NO.	FEDERAL AID PROJECT NO.		HIGHWAY NO.
KT	6	(SEE TITLE SHEET)		IH 35W
GRAPHICS	STATE	DISTRICT	COUNTY	SHEET NO.
SPL	TEXAS	FTW	TARRANT	
CHECK	CONTROL	SECTION	JOB	1590
CLF	0014	16	255, ETC.	
CHECK				
KT				

FILENAME: S3BBR*BB-MLS*SG*02.dgn
DRAWING DATE: 7/13/2012

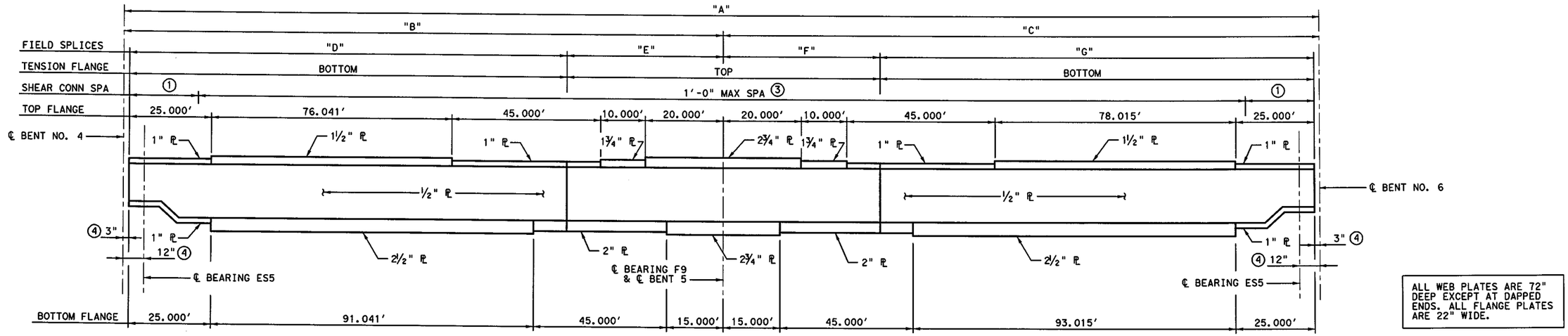

SPAN 4 SPAN 5

① 4 SPA = 2'-0"
② 6 SPA = 6'-0"
③ NOTE: OMISSION OF STUDS AT BOLTED SPLICES.
④ MEASURED PERPENDICULAR TO ℄ BENT.

ALL WEB PLATES ARE 72" DEEP EXCEPT AT DAPPED ENDS. ALL FLANGE PLATES ARE 22" WIDE.

ELEVATION ~ GIRDER NO. 1

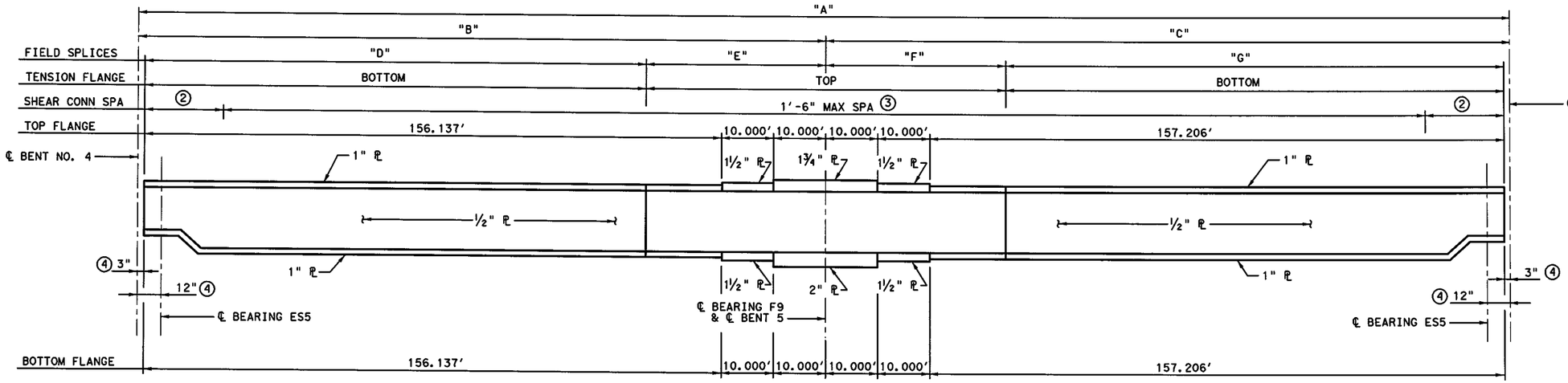

SPAN 4 SPAN 5

ELEVATION ~ GIRDER NO. 2

TABLE OF GIRDER DIMENSIONS							
GIRDER NO.	"A"	"B"	"C"	"D"	"E"	"F"	"G"
1	354.556'	176.291'	178.265'	127.757'	48.284'	48.480'	129.535'
2	353.843'	176.387'	177.456'	127.983'	48.154'	48.260'	128.946'
3	353.130'	176.483'	176.647'	128.209'	48.024'	48.040'	128.357'
4	352.417'	176.579'	175.838'	128.435'	47.894'	47.820'	127.768'

7/11/12
STATE OF TEXAS
CORBETT L. FREEMAN
86913
LICENSED PROFESSIONAL ENGINEER

HL 93 LOADING

I. S. ENGINEERS, LLC
TBPE REG. # F-11657

Texas Department of Transportation
© 2012

IH 35W FROM NORTH TARRANT PKWY TO IH 820
353.00'
PLATE GIRDER UNIT
SB IH35W ENTRANCE RAMP TO MANAGED LANES

SCALE: NTS SHEET 3 OF 6

DESIGN	FED.RD. DIV.NO.	FEDERAL AID PROJECT NO.		HIGHWAY NO.
KT	6	(SEE TITLE SHEET)		IH 35W
GRAPHICS AXD	STATE	DISTRICT	COUNTY	SHEET NO.
CHECK CLF	TEXAS	FTW	TARRANT	
CHECK KT	CONTROL	SECTION	JOB	1591
	0014	16	255, ETC.	

FILENAME: S3BBR*BB-MLS*SG*03.dgn
DRAWING DATE: 7/13/2012

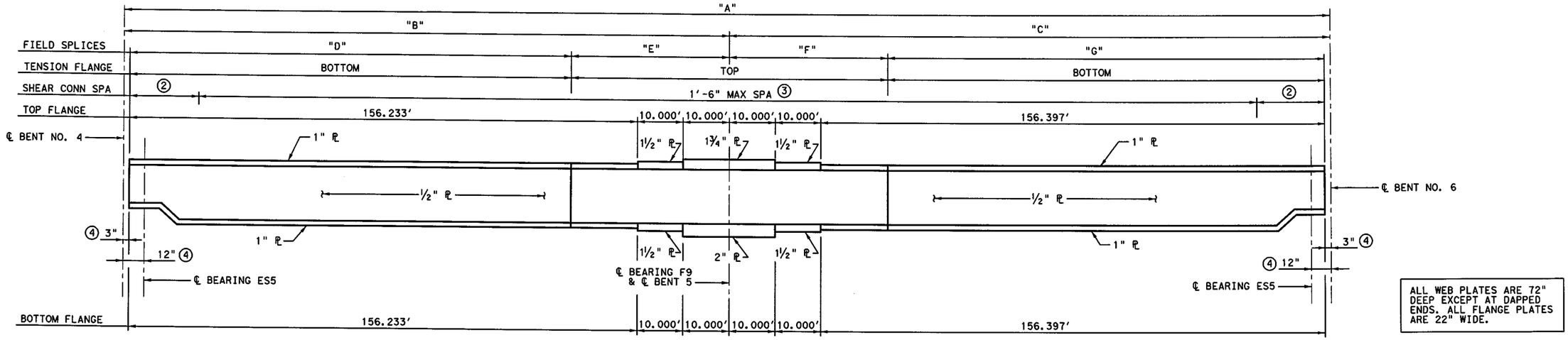

ALL WEB PLATES ARE 72" DEEP EXCEPT AT DAPPED ENDS. ALL FLANGE PLATES ARE 22" WIDE.

SPAN 4 SPAN 5

① 4 SPA = 2'-0"
② 6 SPA = 6'-0"
③ NOTE: OMISSION OF STUDS AT BOLTED SPLICES.
④ MEASURED PERPENDICULAR TO ℄ BENT.

ELEVATION ~ GIRDER NO. 3

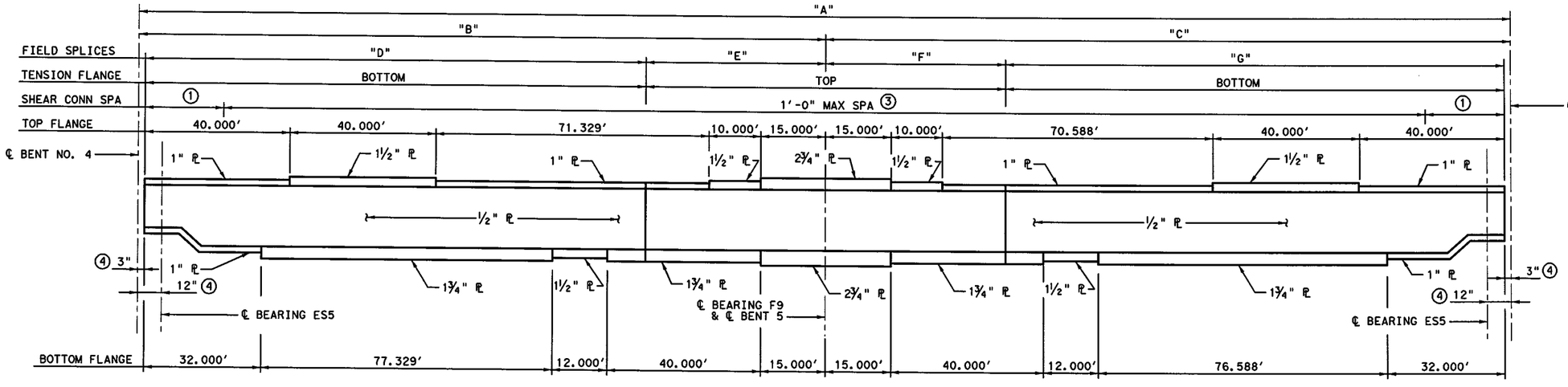

SPAN 4 SPAN 5

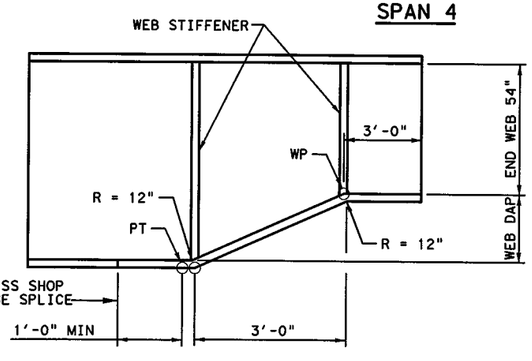

DAPPED END DETAIL

ELEVATION ~ GIRDER NO. 4

HL 93 LOADING

7/11/12
STATE OF TEXAS
CORBETT L. FREEMAN
86913
LICENSED
PROFESSIONAL ENGINEER

I. S. ENGINEERS, LLC
TBPE REG. # F-11657

Texas Department of Transportation

© 2012

IH 35W FROM NORTH TARRANT PKWY TO IH 820
353.00'
PLATE GIRDER UNIT
SB IH35W ENTRANCE RAMP TO MANAGED LANES

SCALE: NTS SHEET 4 OF 6

DESIGN	FED.RD. DIV.NO.	FEDERAL AID PROJECT NO.		HIGHWAY NO.
KT	6	(SEE TITLE SHEET)		IH 35W
GRAPHICS AXD	STATE	DISTRICT	COUNTY	SHEET NO.
CHECK CLF	TEXAS	FTW	TARRANT	
CHECK KT	CONTROL	SECTION	JOB	1592
	0014	16	255, ETC.	

FILENAME: S3BBR*BB-MLS*SG*04.dgn
DRAWING DATE: 7/13/2012

GIRDER	A	WEIGHT (LBS)
1	1¼"	1,415
2	⅝"	1,090
3	⅝"	1,090
4	1¼"	1,415

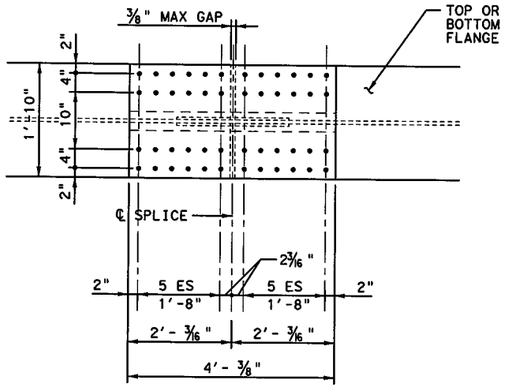

PLAN

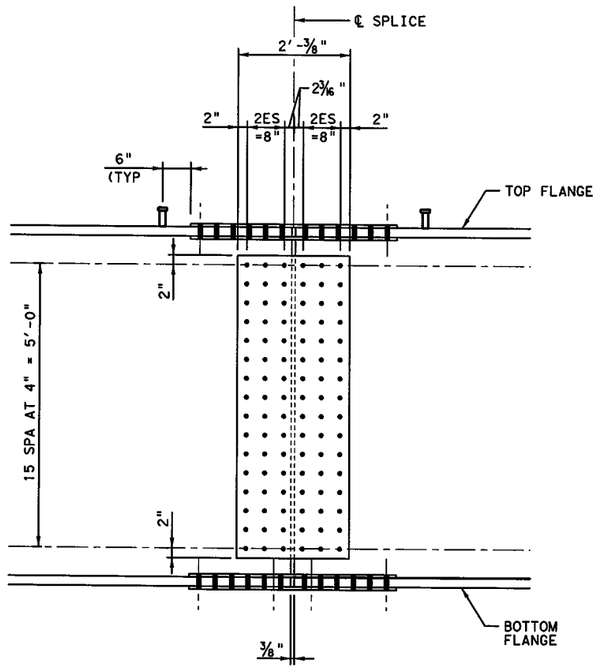

ELEVATION

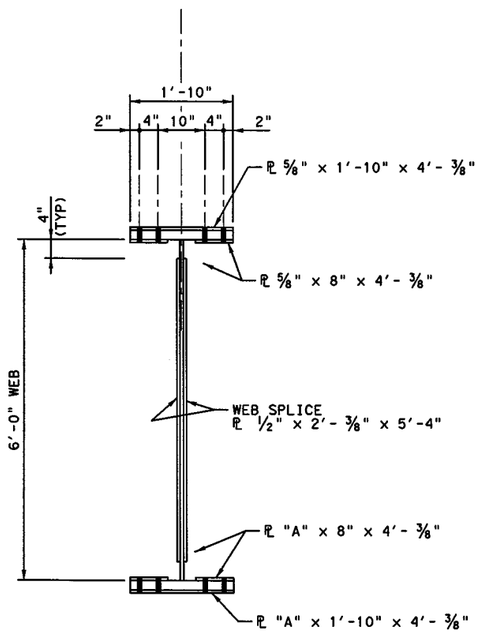

SECTION

BOLTED FIELD SPLICE NOTES:

1. ALL BOLTS SHALL BE 1" DIA A325 TY 1 WITH ONE HARDENED WASHER EACH AND SHALL BE TIGHTENED IN ACCORDANCE WITH ITEM 447. ALL HOLES SHALL BE 1 1⁄16" DIA.
2. ALL SPLICE PLATES SHALL CONFORM TO A709 GRADE 50.
3. ALL SPLICE PLATES ARE CLASSIFIED AS TENSION COMPONENTS AND SHALL CONFORM TO ITEM 442.2.A.1.
4. BOLTS SHALL BE INSTALLED WITH HEADS ON FASCIA SIDE OF WEB FOR GIRDERS NO. 1 AND NO. 4. BOTTOM FLANGE SPLICE BOLTS SHALL BE INSTALLED WITH HEADS FACING DOWN.
5. STRUCTURAL STEEL PAY WEIGHT SHALL BE BASED ON WELDED FIELD SPLICES REGARDLESS OF SPLICE TYPE CHOSEN.
6. CLASS A SURFACE CONDITION WAS ASSUMED IN DESIGN OF FIELD SPLICES (SLIP COEFFICIENT OF 0.33).
7. PREPARE FAYING SURFACES AS PER ITEMS 441, 446, AND 447. ENSURE THE REQUIRED FINISH EXISTS AT THE TIME OF BOLTING. DO NOT WIRE BRUSH UNPAINTED FAYING SURFACES.

OPTIONAL BOLTED FIELD SPLICE

7/11/12

STATE OF TEXAS
CORBETT L. FREEMAN
86913
LICENSED PROFESSIONAL ENGINEER

HL 93 LOADING

I. S. ENGINEERS, LLC
TBPE REG. # F-11657

Texas Department of Transportation
© 2012

IH 35W FROM NORTH TARRANT PKWY TO IH 820
353.00'
PLATE GIRDER UNIT
SB IH35W ENTRANCE RAMP TO MANAGED LANES

SCALE: NTS — SHEET 5 OF 6

DESIGN	FED.RD. DIV.NO.	FEDERAL AID PROJECT NO.		HIGHWAY NO.
KT	6	(SEE TITLE SHEET)		IH 35W
GRAPHICS AXD	STATE	DISTRICT	COUNTY	SHEET NO.
CHECK CLF	TEXAS	FTW	TARRANT	1593
CHECK KT	CONTROL	SECTION	JOB	
	0014	16	255, ETC.	

DRAWING DATE: 7/13/2012 FILENAME: S38BR*BB-MLS*SG*05.dgn

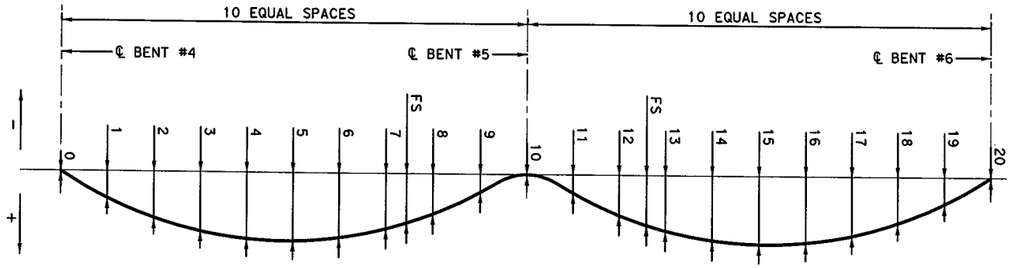

DEAD LOAD DEFLECTION DIAGRAM

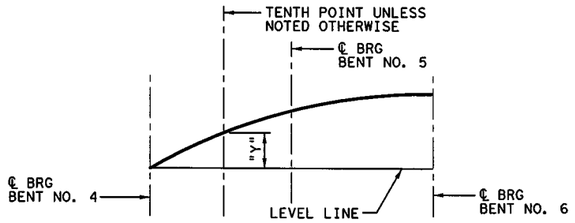

WEB CAMBER DIAGRAM

WEBS MAY BE CUT ON STRAIGHT LINES BETWEEN ORDINATES SHOWN OR TO A SMOOTH CURVE AT THE FABRICATOR' OPTION. ORDINATES SHOWN INCLUDE TOTAL DEAD LOAD DEFLECTION AND VERTICAL CURVE CORRECTIONS.

BAR TABLE

BAR	SIZE
A	#5
B	#5
D	#5
E	#6
G	#5
H	#5
J	#5
M	#5
T	#4

TABLE OF ESTIMATED QUANTITIES

SPAN	REINFORCED CONCRETE SLAB	REINFORCING STEEL ①	CLASS "S" CONCRETE	STRUCTURAL STEEL (PL GIRDER)
NO.	SF	LB	CY	LB
4	4,940	34,581	138.2	
5	4,957	34,702	138.7	
TOTAL	9,897	69,283	276.9	523,000

① REINFORCING STEEL WEIGHT IS CALCULATED USING AN APPROXIMATE FACTOR OF 7.0 LBS PER SQ FT.

FS = FIELD SPLICE

TABLE OF DEAD LOAD DEFLECTIONS

		DUE TO CAST-IN-PLACE CONCRETE (FT)				TOTAL INCLUDING STEEL (FT)				
		GIRDER NO.					GIRDER NO.			
	LOCATION	1	2	3	4	LOCATION	1	2	3	4
SPAN NO. 4	℄ BRG	0.000′	0.000′	0.000′	0.000′	℄ BRG	0.000′	0.000′	0.000′	0.000′
	1	0.070′	0.079′	0.088′	0.099′	1	0.111′	0.123′	0.136′	0.151′
	2	0.124′	0.143′	0.161′	0.178′	2	0.198′	0.223′	0.248′	0.273′
	3	0.159′	0.184′	0.208′	0.229′	3	0.254′	0.289′	0.321′	0.351′
	4	0.172′	0.200′	0.226′	0.250′	4	0.274′	0.313′	0.349′	0.383′
	5	0.161′	0.188′	0.215′	0.241′	5	0.257′	0.295′	0.332′	0.369′
	6	0.130′	0.154′	0.178′	0.201′	6	0.208′	0.242′	0.275′	0.308′
	7	0.092′	0.104′	0.123′	0.141′	7	0.147′	0.164′	0.191′	0.217′
	FS	0.085′	0.091′	0.107′	0.123′	FS	0.137′	0.142′	0.166′	0.189′
	8	0.038′	0.051′	0.064′	0.075′	8	0.061′	0.081′	0.099′	0.116′
	9	0.009′	0.012′	0.018′	0.024′	9	0.015′	0.019′	0.028′	0.037′
SPAN NO. 5	℄ BRG	0.000′	0.000′	0.000′	0.000′	℄ BRG	0.000′	0.000′	0.000′	0.000′
	11	0.020′	0.020′	0.014′	0.007′	11	0.032′	0.031′	0.021′	0.011′
	12	0.077′	0.066′	0.054′	0.042′	12	0.123′	0.105′	0.085′	0.065′
	FS	0.124′	0.109′	0.094′	0.079′	FS	0.197′	0.173′	0.147′	0.121′
	13	0.124′	0.125′	0.109′	0.093′	13	0.197′	0.197′	0.170′	0.142′
	14	0.197′	0.179′	0.161′	0.142′	14	0.314′	0.282′	0.250′	0.217′
	15	0.234′	0.215′	0.196′	0.175′	15	0.371′	0.338′	0.304′	0.269′
	16	0.243′	0.225′	0.206′	0.186′	16	0.386′	0.354′	0.321′	0.285′
	17	0.221′	0.206′	0.190′	0.172′	17	0.352′	0.325′	0.296′	0.264′
	18	0.170′	0.159′	0.147′	0.135′	18	0.271′	0.250′	0.229′	0.207′
	19	0.095′	0.087′	0.081′	0.075′	19	0.151′	0.137′	0.126′	0.115′
	℄ BRG	0.000′	0.000′	0.000′	0.000′	℄ BRG	0.000′	0.000′	0.000′	0.000′

FS = FIELD SPLICE

CAMBER DIAGRAM TABLE

"Y" VALUES IN FEET

	LOCATION	GIRDER NO. 1	2	3	4
SPAN NO. 4	℄ BRG	0.000′	0.000′	0.000′	0.000′
	1	0.167′	0.133′	0.100′	0.068′
	2	0.274′	0.208′	0.140′	0.072′
	3	0.316′	0.212′	0.106′	-0.003′
	4	0.286′	0.140′	-0.009′	-0.159′
	5	0.183′	-0.009′	-0.203′	-0.398′
	6	0.014′	-0.230′	-0.474′	-0.718′
	7	-0.233′	-0.510′	-0.807′	-1.104′
	FS	-0.264′	-0.595′	-0.907′	-1.221′
	8	-0.481′	-0.831′	-1.182′	-1.535′
	9	-0.754′	-1.166′	-1.572′	-1.980′
SPAN NO. 5	℄ BRG	-1.031′	-1.493′	-1.955′	-2.417′
	11	-1.297′	-1.806′	-2.324′	-2.842′
	12	-1.539′	-2.112′	-2.685′	-3.260′
	FS	-1.726′	-2.338′	-2.951′	-3.565′
	13	-1.833′	-2.433′	-3.061′	-3.689′
	14	-2.195′	-2.839′	-3.483′	-4.128′
	15	-2.677′	-3.322′	-3.968′	-4.615′
	16	-3.237′	-3.881′	-4.526′	-5.174′
	17	-3.881′	-4.520′	-5.161′	-5.805′
	18	-4.608′	-5.240′	-5.874′	-6.507′
	19	-5.408′	-6.034′	-6.657′	-7.279′
	℄ BRG	-6.275′	-6.887′	-7.499′	-8.111′

GIRDER SLOPE TABLE (FT/FT)

LOCATION	GIRDER NO. 1	2	3	4
℄ BRG BENT NO. 4	0.000	0.002	0.001	-0.003
℄ BRG BENT NO. 5	-0.016	-0.018	-0.021	-0.021
℄ BRG BENT NO. 6	-0.041	-0.054	-0.038	-0.067

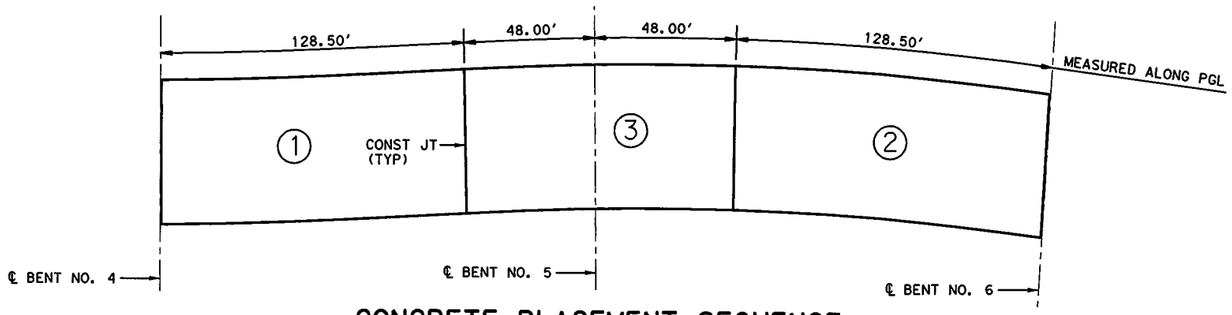

CONCRETE PLACEMENT SEQUENCE

CONTINUOUS PLACEMENT WILL NOT BE PERMITTED

PLATE GIRDER FABRICATION NOTES:

1. ALL STRUCTURAL STEEL INCLUDING STIFFENERS AND DIAPHRAGMS SHALL CONFORM TO ASTM A709 GR. 50 AND SHALL BE PAID FOR AT THE UNIT PRICE BID FOR STRUCTURAL STEEL (PLATE GIRDER). ALL STRUCTURAL STEEL SHALL BE PAINTED. PAINT SYSTEM FOR STEEL GIRDERS SHALL BE PROTECTION SYSTEM II. THIS SYSTEM SHALL CONFORM TO TXDOT STANDARD SPECIFICATION ITEM 446.
2. GIRDER TENSION FLANGES AND WEBS ARE CLASSIFIED AS TENSION COMPONENTS AND SHALL CONFROM TO ITEM 442.2.A.1.
3. ALL DIMENSIONS SHOWN IN GIRDER ELEVATIONS ARE HORIZONTAL ARCH DIMENSIONS.
4. EXCEPT AT CHANGES IN SECTION, SHOP OR FIELD FLANGE AND WEB SPLICES IN PLATE GIRDERS MAY BE LOCATED AS DESIRABLE TO OPTIMIZE PLATE LENGTHS AND ERECTION PROCEDURES, EXCEPT THAT SPLICES WILL NOT BE ALLOWED WHERE A 40FT OR LESS UNSPLICED LENGTH WOULD SUFFICE; NEITHER WILL TENSION FLANGE SPLICES BE ALLOWED WITHIN 0.05S EITHER SIDE OF INTERIOR BEARINGS, WITHIN 0.10S EITHER SIDE OF THE CENTERLINES OF INTERIOR SPANS, NOR WITHIN THE RANGE BETWEEN 0.30S AND 0.50S FROM THE END BEARINGS (S = LENGTH C.C. BEARING OF SPAN IN WHICH THE SPLICE IS MADE).
5. SHOP FLANGE AND WEB SPLICES SHALL BE MADE BY FULL PENETRATION GROOVE WELDS IN ACCORDANCE WITH THE ITEM "STEEL STRUCTURES".

7/11/12

STATE OF TEXAS
CORBETT L. FREEMAN
86913
LICENSED
PROFESSIONAL ENGINEER

HL 93 LOADING

I. S. ENGINEERS, LLC
TBPE REG. # F-11657

Texas Department of Transportation
© 2012

IH 35W FROM NORTH TARRANT PKWY TO IH 820
353.00′
PLATE GIRDER UNIT
SB IH35W ENTRANCE RAMP TO MANAGED LANES

SCALE: NTS — SHEET 6 OF 6

DESIGN	FED. RD. DIV. NO.	FEDERAL AID PROJECT NO.		HIGHWAY NO.
KT	6	(SEE TITLE SHEET)		IH 35W
GRAPHICS CLF	STATE	DISTRICT	COUNTY	SHEET NO.
CHECK KT	TEXAS	FTW	TARRANT	1594
CHECK CLF	CONTROL	SECTION	JOB	
	0014	16	255, ETC.	

FILENAME: S3BBR*BB-MLS*SG*06.dgn
DRAWING DATE: 7/13/2012

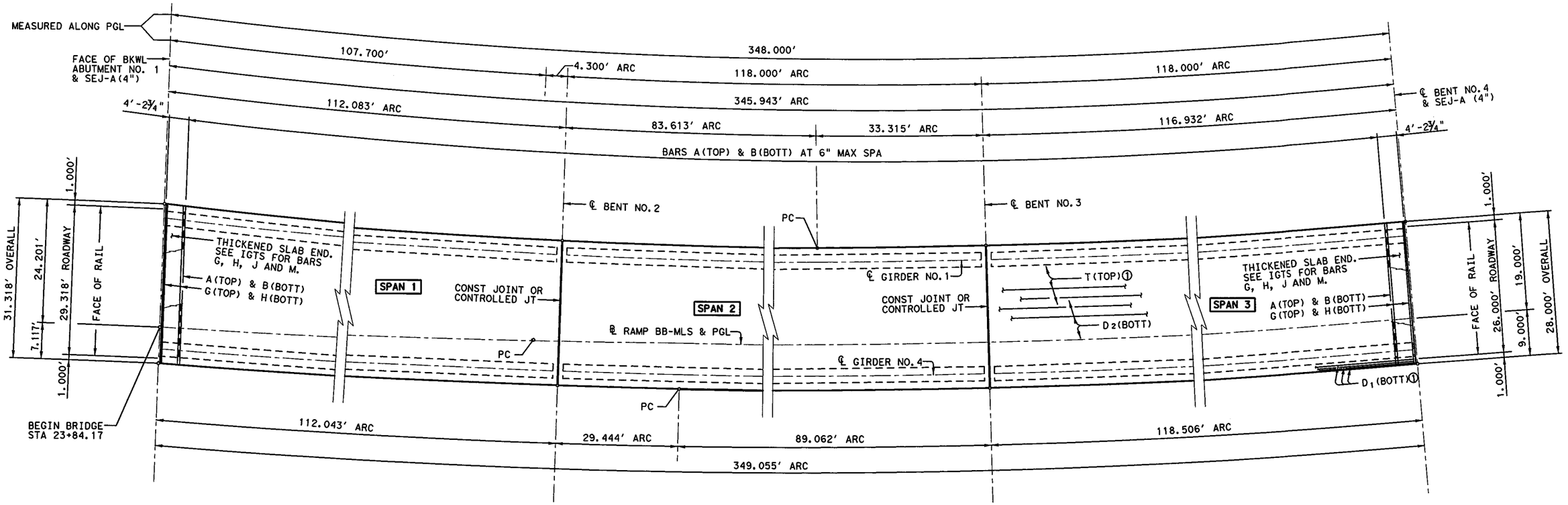

① 2" END COVER ON BARS D1 AND T

PLAN

HL 93 LOADING

STATE OF TEXAS
CORBETT L. FREEMAN
86913
LICENSED PROFESSIONAL ENGINEER
7/11/12

I. S. ENGINEERS, LLC
TBPE REG. # F-11657

Texas Department of Transportation
© 2012

IH 35W FROM NORTH TARRANT PKWY TO IH 820

348.00' PRESTRESSED CONCRETE I-GIRDER UNIT

SB IH35W ENTRANCE RAMP TO MANAGED LANES

SCALE: NTS — SHEET 1 OF 2

DESIGN	FED.RD. DIV.NO.	FEDERAL AID PROJECT NO.		HIGHWAY NO.
CLF	6	(SEE TITLE SHEET)		IH 35W
GRAPHICS AXD	STATE	DISTRICT	COUNTY	SHEET NO.
CHECK SB	TEXAS	FTW	TARRANT	
CHECK CLF	CONTROL	SECTION	JOB	1595
	0014	16	255, ETC.	

DRAWING DATE: 7/13/2012 FILENAME: S3BBR*BB-MLS*PB*01.dgn

TYPE Tx54 GIRDERS

SPAN NO.	GIRDER NO.	"A" FT	"B" FT
1	ALL	0.107	0.152
2	ALL	0.125	0.178
3	ALL	0.124	0.176

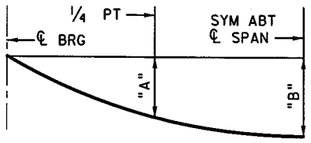

DEAD LOAD DEFLECTION DIAGRAM

CALCULATED DEFLECTIONS SHOWN ARE DUE TO THE CONCRETE SLAB ON INTERIOR GIRDERS ONLY (EC = 5000 KSI). ADJUST VALUES AS REQUIRED FOR EXTERIOR GIRDERS AND IF OPTIONAL SLAB FORMING IS USED. THESE VALUES MAY REQUIRE FIELD VERIFICATION.

TABLE OF SECTION DEPTHS

SPAN NO.	GIRDER NO.	"X" AT ℄ BRG	"Y" AT ℄ BRG	"Z" AT ℄ SPAN②
1	ALL	11½"	5'-5½"	10½"
2	1	11½"	5'-5½"	9⅜"
2	2,3	11½"	5'-5½"	10⅞"
2	4	11½"	5'-5½"	12"
3	1	11½"	5'-5½"	11¼"
3	2,3	11½"	5'-5½"	12"
3	4	11½"	5'-5½"	12¼"

② THEORICAL DIMENSION

BAR TABLE

BAR	SIZE
A	#5
B	#5
D	#5
G	#5
H	#5
J	#5
M	#5
T	#4

TABLE OF ESTIMATED QUANTITIES

SPAN	REINF CONCRETE SLAB	PRESTR CONC I-GIRDERS (Tx54) ④	CLASS "S" CONCRETE (HPC)	TOTAL REINF STEEL ③
NO.	SF	LF	CY	LB
1	3,321	446.25	96.0	21,587
2	3,296	469.03	95.2	21,425
3	3,296	468.99	95.8	21,423
TOTAL	9,913	1,384.27	287.0	64,435

③ REINFORCING STEEL WEIGHT IS CALCULATED USING AN APPROXIMATE FACTOR OF 6.5 LBS/SF.
④ LENGTHS SHOWN ARE BOTTOM OF GIRDER FLANGE LENGTHS WITH ADJUSTMENTS MADE FOR BEAM SLOPE. SEE GIRDER LAYOUT FOR GIRDER LENGTHS.

GENERAL NOTES:

1. DESIGNED ACCORDING TO AASHTO LRFD BRIDGE DESIGN SPECIFICATION, 5TH EDITION (2010).
2. SEE PCP OR PMDF STANDARDS FOR DETAILS AND QUANTITY ADJUSTMENTS IF EITHER OF THESE OPTION ARE USED.
3. SEE IGTS STANDARD FOR THICKENED SLAB END DETAILS.
4. ALL REINFORCING STEEL SHALL BE GRADE 60 AND EPOXY COATED.
5. CLASS "S" (HPC) CONCRETE STRENGTH F'C = 4,000 PSI.
6. BAR LAPS, WHERE REQUIRED, WILL BE AS FOLLOWS: EPOXY COATED #4 = 2'-1"
   #5 = 2'-7"

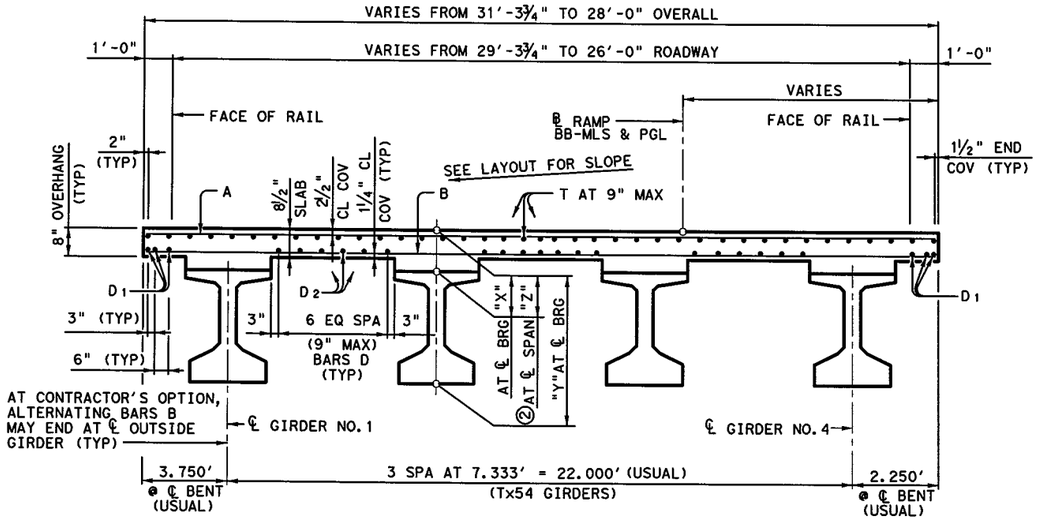

TYPICAL TRANSVERSE SECTION

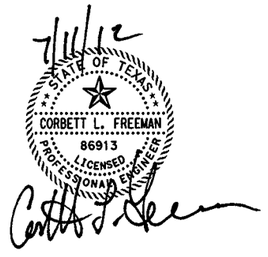

HL 93 LOADING

I. S. ENGINEERS, LLC
TBPE REG. # F-11657

Texas Department of Transportation
© 2012

IH 35W FROM NORTH TARRANT PKWY TO IH 820

348.00' PRESTRESSED CONCRETE I-GIRDER UNIT
SB IH35W ENTRANCE RAMP TO MANAGED LANES

SCALE: NTS — SHEET 2 OF 2

DESIGN	FED.RD. DIV.NO.	FEDERAL AID PROJECT NO.		HIGHWAY NO.
CLF	6	(SEE TITLE SHEET)		IH 35W
GRAPHICS AXD	STATE	DISTRICT	COUNTY	SHEET NO.
CHECK SB	TEXAS	FTW	TARRANT	
CHECK CLF	CONTROL	SECTION	JOB	1596
	0014	16	255, ETC.	

FILENAME: S3BBR*BB-MLS*PB*02.dgn
DRAWING DATE: 7/13/2012

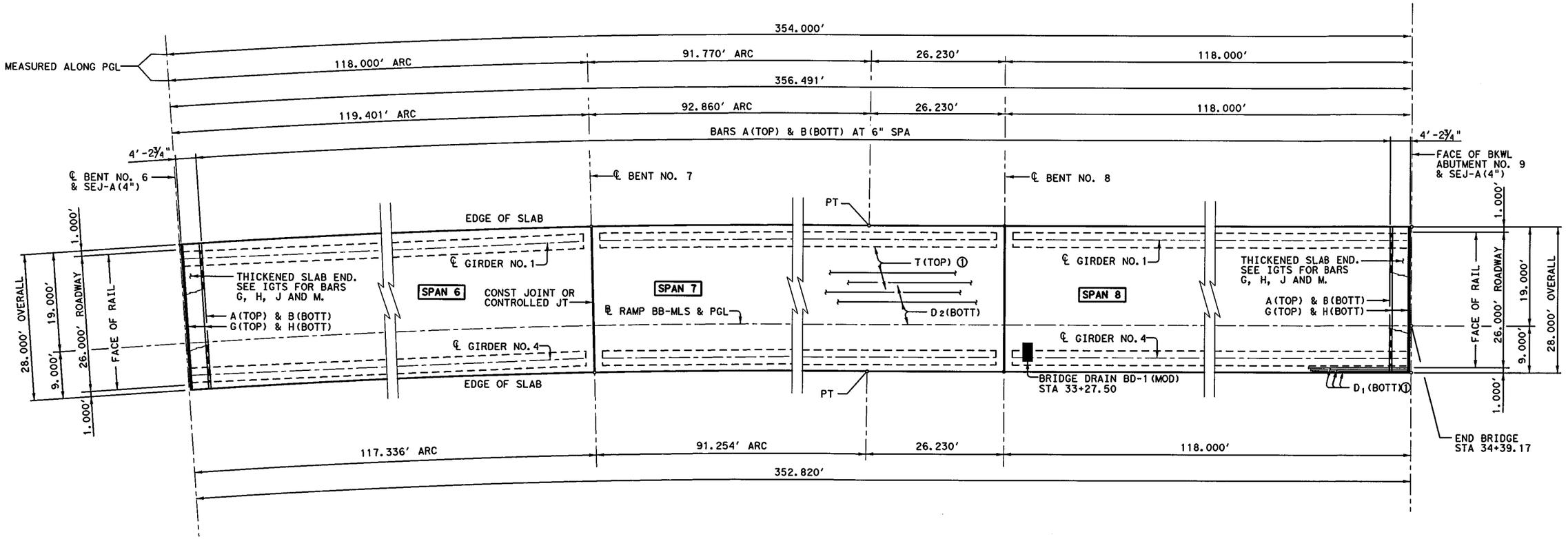

① 2" END COVER ON BARS D1 AND T

PLAN

7/28/12

STATE OF TEXAS
CORBETT L. FREEMAN
86913
LICENSED
PROFESSIONAL ENGINEER

HL 93 LOADING

I. S. ENGINEERS, LLC

TBPE REG. # F-11657

Texas Department of Transportation

© 2012

IH 35W FROM NORTH TARRANT PKWY TO IH 820

354.00' PRESTRESSED CONCRETE I-GIRDER UNIT

SB IH35W ENTRANCE RAMP TO MANAGED LANES

SCALE: NTS

SHEET 1 OF 2

DESIGN	FED.RD. DIV.NO.	FEDERAL AID PROJECT NO.		HIGHWAY NO.
CLF	6	(SEE TITLE SHEET)		IH 35W
GRAPHICS AXD	STATE	DISTRICT	COUNTY	SHEET NO.
CHECK SB	TEXAS	FTW	TARRANT	1597
CHECK CLF	CONTROL	SECTION	JOB	
	0014	16	255, ETC.	

FILENAME: S3BBR*BB-MLS*PB*03.dgn

DRAWING DATE: 7/28/2012

TYPE Tx54 GIRDERS

SPAN NO.	GIRDER NO.	"A" FT	"B" FT
1	ALL	0.120	0.170
2	ALL	0.111	0.157
3	ALL	0.116	0.165

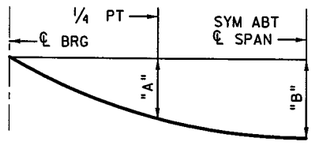

DEAD LOAD DEFLECTION DIAGRAM

CALCULATED DEFLECTIONS SHOWN ARE DUE TO THE CONCRETE SLAB ON INTERIOR GIRDERS ONLY (EC = 5000 KSI). ADJUST VALUES AS REQUIRED FOR EXTERIOR GIRDERS AND IF OPTIONAL SLAB FORMING IS USED. THESE VALUES MAY REQUIRE FIELD VERIFICATION.

TABLE OF SECTION DEPTHS

SPAN NO.	GIRDER NO.	"X" AT ℄ BRG	"Y" AT ℄ BRG	"Z" AT ℄ SPAN②
6	1-3	1 1/2"	5'-5 1/2"	10 1/2"
6	4	1 1/2"	5'-5 1/2"	10 1/4"
7	1	1 1/2"	5'-5 1/2"	10 1/2"
7	2,3	1 1/2"	5'-5 1/2"	9 7/8"
7	4	1 1/2"	5'-5 1/2"	9 1/4"
8	1	1 1/2"	5'-5 1/2"	9 5/8"
8	2,3	1 1/2"	5'-5 1/2"	10 1/8"
8	4	1 1/2"	5'-5 1/2"	10 3/4"

② THEORICAL DIMENSION

BAR TABLE

BAR	SIZE
A	#5
B	#5
D	#5
G	#5
H	#5
J	#5
M	#5
T	#4

TABLE OF ESTIMATED QUANTITIES

SPAN	REINF CONCRETE SLAB	PRESTR CONC I-GIRDERS (Tx54) ④	CLASS "S" CONCRETE (HPC)	TOTAL REINF STEEL ③
NO.	SF	LF	CY	LB
6	3,314	464.08	96.2	21,543
7	3,312	455.76	95.4	21,529
8	3,304	462.55	95.9	21,476
TOTAL	9,930	1,382.39	287.4	64,548

③ REINFORCING STEEL WEIGHT IS CALCULATED USING AN APPROXIMATE FACTOR OF 6.5 LBS/SF.
④ LENGTHS SHOWN ARE BOTTOM OF GIRDER FLANGE LENGTHS WITH ADJUSTMENTS MADE FOR BEAM SLOPE. SEE GIRDER LAYOUT FOR GIRDER LENGTHS.

GENERAL NOTES:

1. DESIGNED ACCORDING TO AASHTO LRFD BRIDGE DESIGN SPECIFICATION, 5TH EDITION (2010).
2. SEE PCP OR PMDF STANDARDS FOR DETAILS AND QUANTITY ADJUSTMENTS IF EITHER OF THESE OPTION ARE USED.
3. SEE IGTS STANDARD FOR THICKENED SLAB END DETAILS.
4. ALL REINFORCING STEEL SHALL BE GRADE 60 AND EPOXY COATED.
5. CLASS "S"(HPC) CONCRETE STRENGTH F'C = 4,000 PSI.
6. BAR LAPS, WHERE REQUIRED, WILL BE AS FOLLOWS: EPOXY COATED #4 = 2'-1"
   #5 = 2'-7"

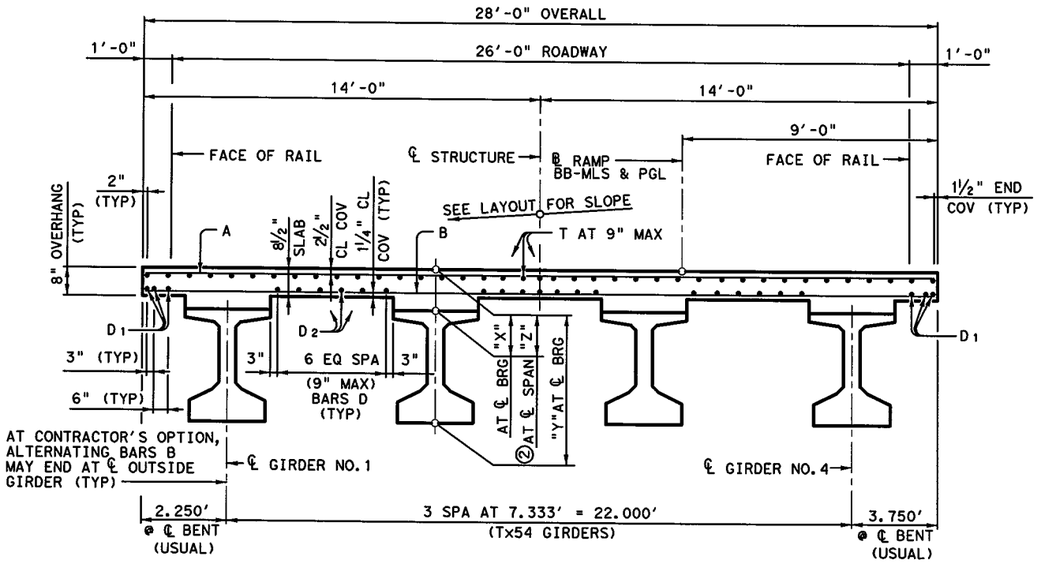

TYPICAL TRANSVERSE SECTION

7/11/12
STATE OF TEXAS
CORBETT L. FREEMAN
86913
LICENSED PROFESSIONAL ENGINEER

HL 93 LOADING

I. S. ENGINEERS, LLC
TBPE REG. # F-11657

Texas Department of Transportation
© 2012

IH 35W FROM NORTH TARRANT PKWY TO IH 820

354.00' PRESTRESSED CONCRETE I-GIRDER UNIT

SB IH35W ENTRANCE RAMP TO MANAGED LANES

SCALE: NTS — SHEET 2 OF 2

DESIGN	FED.RD. DIV.NO.	FEDERAL AID PROJECT NO.		HIGHWAY NO.
CLF	6	(SEE TITLE SHEET)		IH 35W
GRAPHICS AXD	STATE	DISTRICT	COUNTY	SHEET NO.
CHECK SB	TEXAS	FTW	TARRANT	1598
CHECK CLF	CONTROL	SECTION	JOB	
	0014	16	255, ETC.	

DRAWING DATE: 7/13/2012 FILENAME: S3BBR*BB-MLS*PB*04.dgn

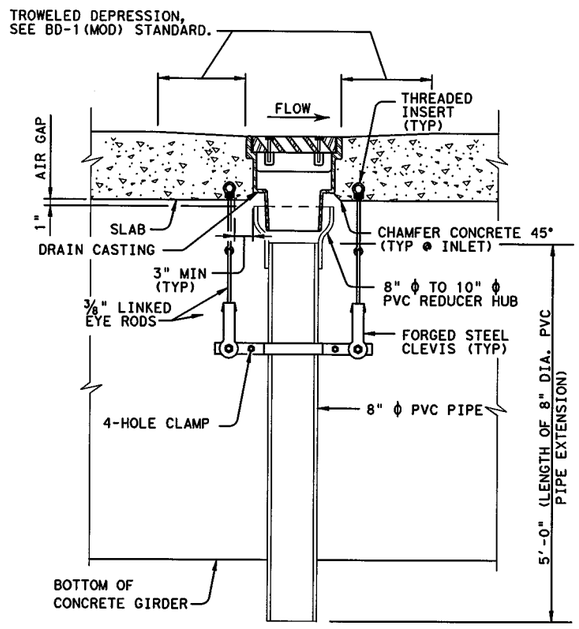

HOOK-UP TO INLET W/VERTICAL PIPE SUPPORT

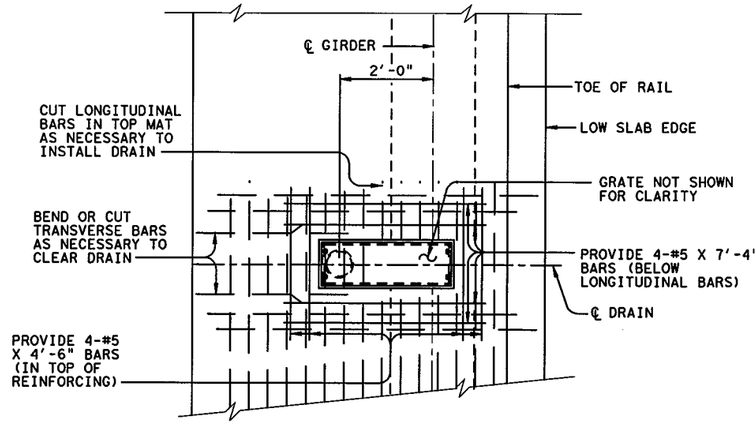

TYPICAL PLAN SHOWING SLAB REINFORCING

GENERAL NOTES:

A TEMPORARY PLUG WILL BE PLACED IN ANY OPEN PIPES AND SHALL REMAIN UNTIL GRATE INLET AND ALL PIPING ARE INSTALLED.

THE ENTIRE DRAIN SYSTEM FOR EACH SPAN SHALL BE FULLY CONNECTED AND OPERATIONAL PRIOR TO PLACEMENT OF RAILS ON SPANS.

ALL PIPE BENDS SHALL BE 45° MAXIMUM.

SEE BD-1(MOD) SHEET FOR DETAILS NOT SHOWN.

7/28/12

STATE OF TEXAS
CORBETT L. FREEMAN
86913
LICENSED
PROFESSIONAL ENGINEER

HL 93 LOADING

I. S. ENGINEERS, LLC
TBPE REG. # F-11657

Texas Department of Transportation
© 2012

IH 35W FROM NORTH TARRANT PKWY TO IH 820

BRIDGE DRAIN DETAILS
SB IH35W ENTRANCE RAMP TO MANAGED LANES

SCALE: NTS — SHEET 1 OF 1

DESIGN	FED.RD. DIV.NO.	FEDERAL AID PROJECT NO.		HIGHWAY NO.
CLF	6	(SEE TITLE SHEET)		IH 35W
GRAPHICS AXD	STATE	DISTRICT	COUNTY	SHEET NO.
CHECK BV	TEXAS	FTW	TARRANT	1599
CHECK CLF	CONTROL	SECTION	JOB	
	0014	16	255, ETC.	

DRAWING DATE: 7/28/2012 FILENAME: S3BBR*BB-MLS*DR*01.dgn

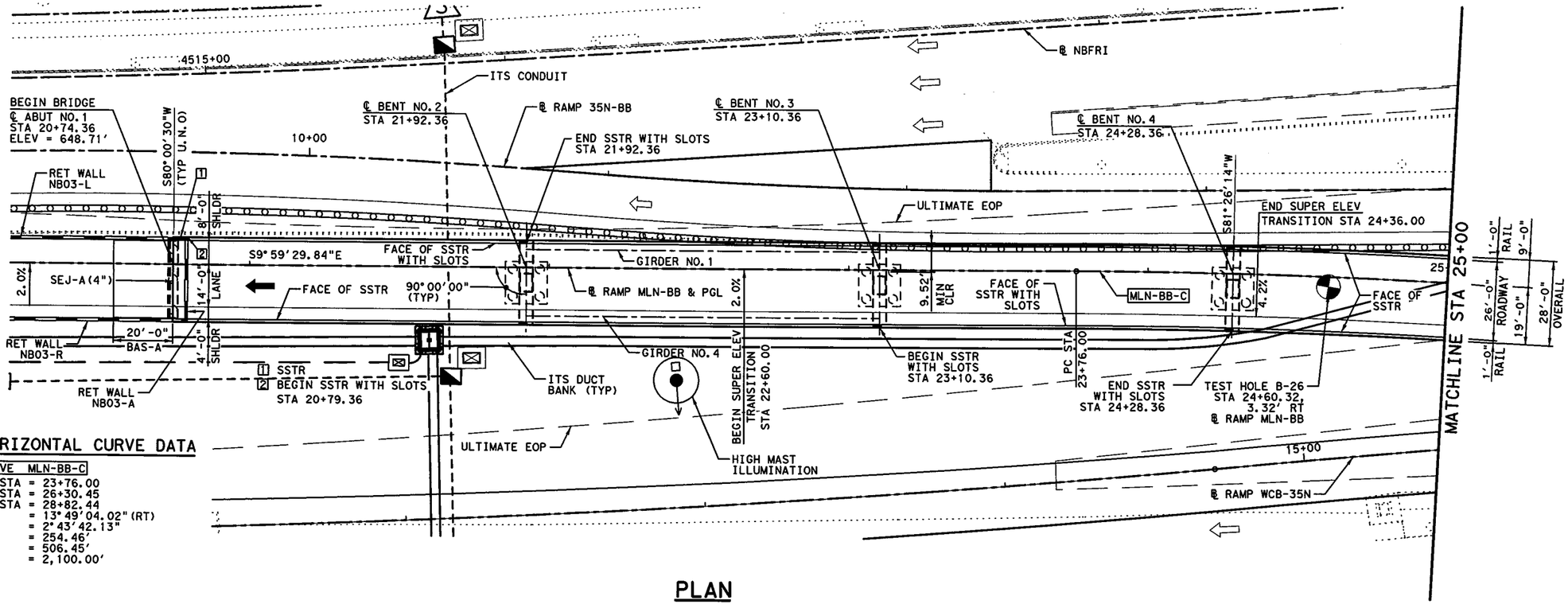

PLAN

HORIZONTAL CURVE DATA

CURVE MLN-BB-C

PC STA = 23+76.00
PI STA = 26+30.45
PT STA = 28+82.44
Δ = 13°49'04.02" (RT)
D = 2°43'42.13"
T = 254.46'
L = 506.45'
R = 2,100.00'

0' 10' 20' 40'

SCALE IN FEET

GENERAL NOTES:

1. DESIGNED IN ACCORDANCE WITH 2010 AASHTO LRFD BRIDGE DESIGN SPECIFICATIONS.
2. ALL DIMENSIONS ARE EITHER HORIZONTAL OR VERTICAL AND MUST BE CORRECTED FOR GRADE, CROWN, AND/OR SUPERELEVATION.
3. "D" DENOTES BENTS WITH DOWEL BARS "D" AND SLOTTED HOLES AT ENDS OF EXTERIOR GIRDERS ONLY.
4. FOR STEEL UNIT: "E" DENOTES EXPANSION BEARING, "F" DENOTES FIXED BEARING.
5. SEE "BORING LOGS - BRIDGE" SHEETS FOR GEOTECHNICAL INFORMATION.
6. FOR TYPICAL SECTIONS, SEE SHEET 3 OF 4.
7. CONTRACTOR TO VERIFY LOCATION OF ALL UTILITIES PRIOR TO EXCAVATION.
8. SIDE SLOT DRAINS FOR SSTR RAIL SHALL NOT BE LOCATED WITHIN 6' OF ℄ BENT.
9. ALLOWANCE FOR FUTURE RESURFACING: 23.3 PSF.

NEW NBI = 02-220-0-0014-16-546
FUNCTIONAL CLASS = URBAN FREEWAY
DESIGN SPEED = 45 MPH
ADT = 6,300 (2030)

HL 93 LOADING

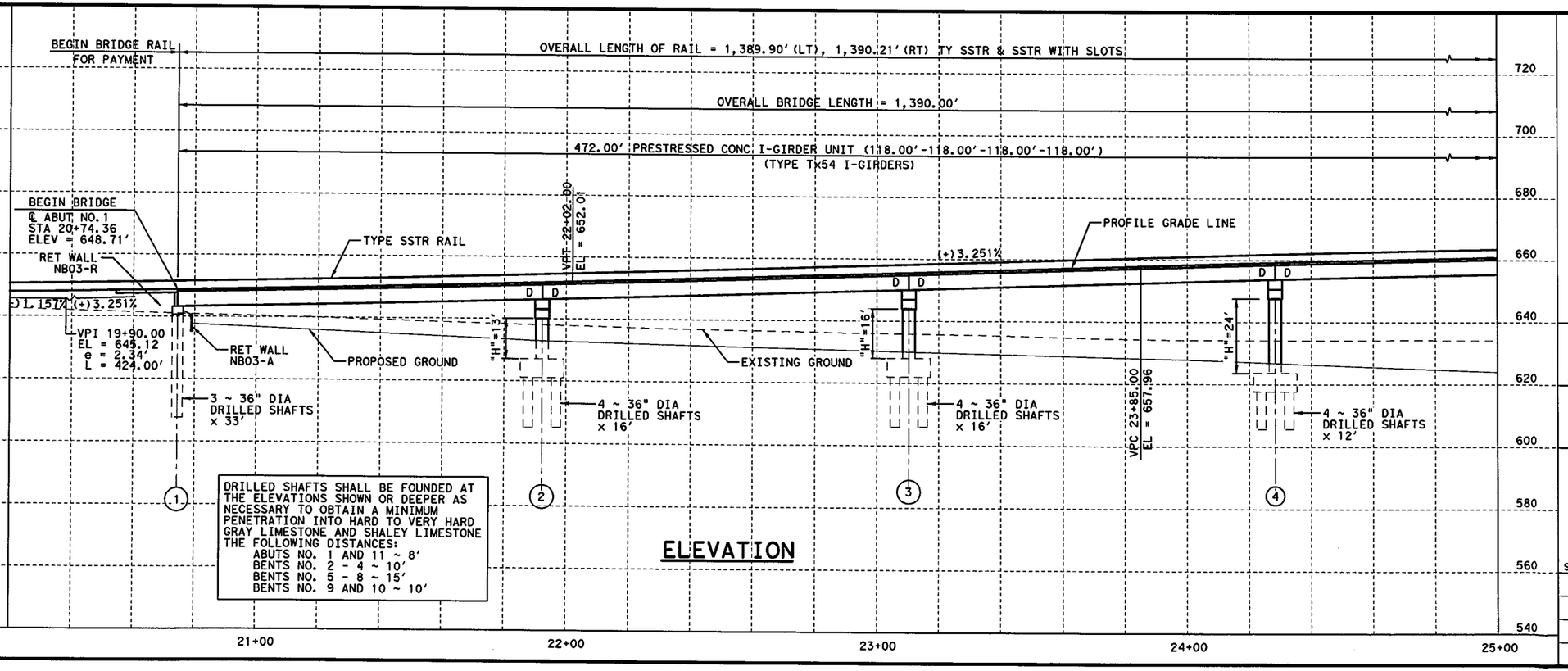

DRILLED SHAFTS SHALL BE FOUNDED AT THE ELEVATIONS SHOWN OR DEEPER AS NECESSARY TO OBTAIN A MINIMUM PENETRATION INTO HARD TO VERY HARD GRAY LIMESTONE AND SHALEY LIMESTONE THE FOLLOWING DISTANCES:
ABUTS NO. 1 AND 11 ~ 8'
BENTS NO. 2 - 4 ~ 10'
BENTS NO. 5 - 8 ~ 15'
BENTS NO. 9 AND 10 ~ 10'

ELEVATION

7/11/12
STATE OF TEXAS
CORBETT L. FREEMAN
86913
LICENSED
PROFESSIONAL ENGINEER

I. S. ENGINEERS, LLC
TBPE REG. # F-11657

Texas Department of Transportation
© 2012

IH 35W FROM NORTH TARRANT PKWY TO IH 820

BRIDGE LAYOUT
NB IH35W EXIT RAMP
FROM MANAGED LANES

SCALE: 1" = 40' H & V
SHEET 1 OF 4

DESIGN	FED.RD. DIV.NO.	FEDERAL AID PROJECT NO.		HIGHWAY NO.
CLF	6	(SEE TITLE SHEET)		IH 35W
GRAPHICS	STATE	DISTRICT	COUNTY	SHEET NO.
SPL	TEXAS	FTW	TARRANT	
CHECK	CONTROL	SECTION	JOB	1600
SB	0014	16	255, ETC.	
CHECK				
CLF				

FILENAME: S3BBR*MLN-BB*BL*01.dgn
DRAWING DATE: 7/13/2012

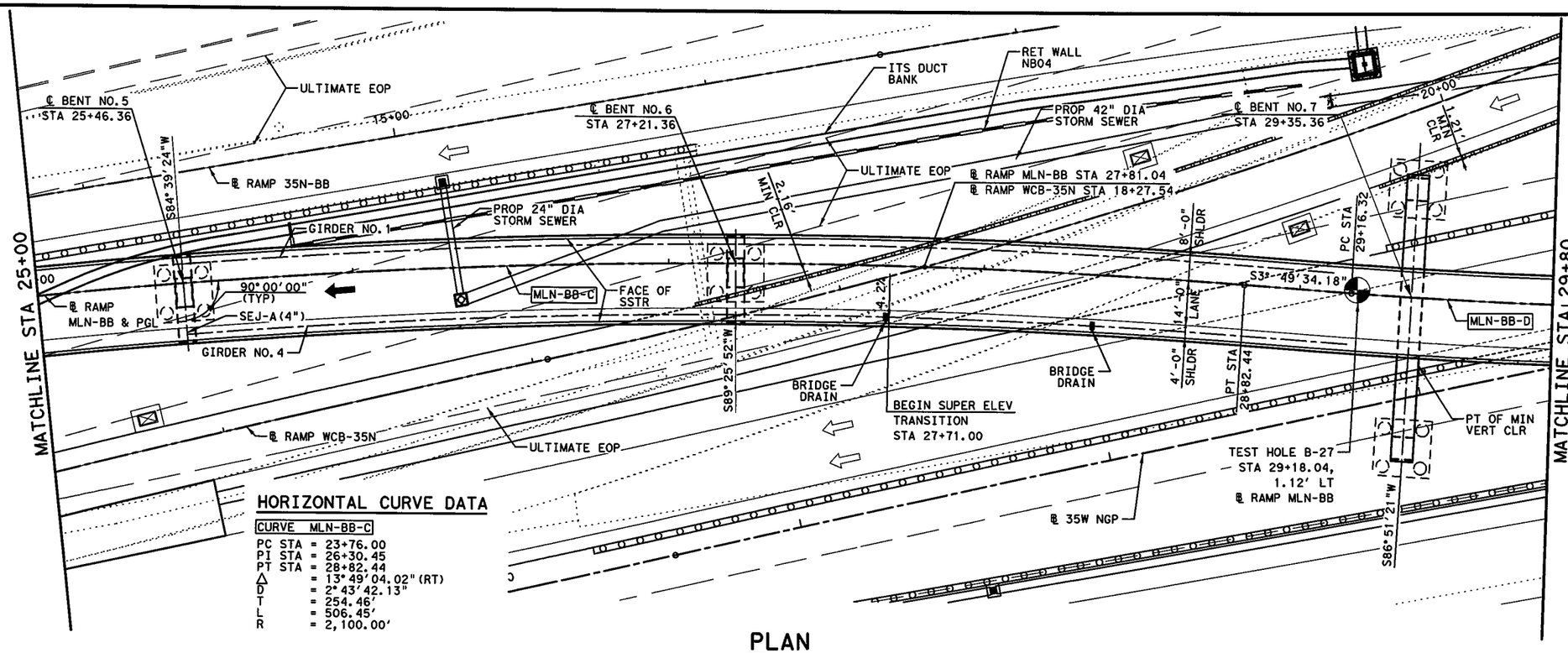

HORIZONTAL CURVE DATA

CURVE	MLN-BB-C
PC STA	= 23+76.00
PI STA	= 26+30.45
PT STA	= 28+82.44
Δ	= 13° 49' 04.02" (RT)
D	= 2° 43' 42.13"
T	= 254.46'
L	= 506.45'
R	= 2,100.00'

PLAN

0' 10' 20' 40'

SCALE IN FEET

NOTES:

1. FOR GENERAL NOTES, SEE SHEET 1 OF 4.
2. FOR TYPICAL SECTIONS, SEE SHEET 3 OF 4.

HORIZONTAL CURVE DATA

CURVE	MLN-BB-D
PC STA	= 29+16.32
PI STA	= 31+19.00
PT STA	= 33+19.53
Δ	= 14° 26' 20.51" (LT)
D	= 3° 34' 51.55"
T	= 202.68'
L	= 403.21'
R	= 1,600.00'

HL 93 LOADING

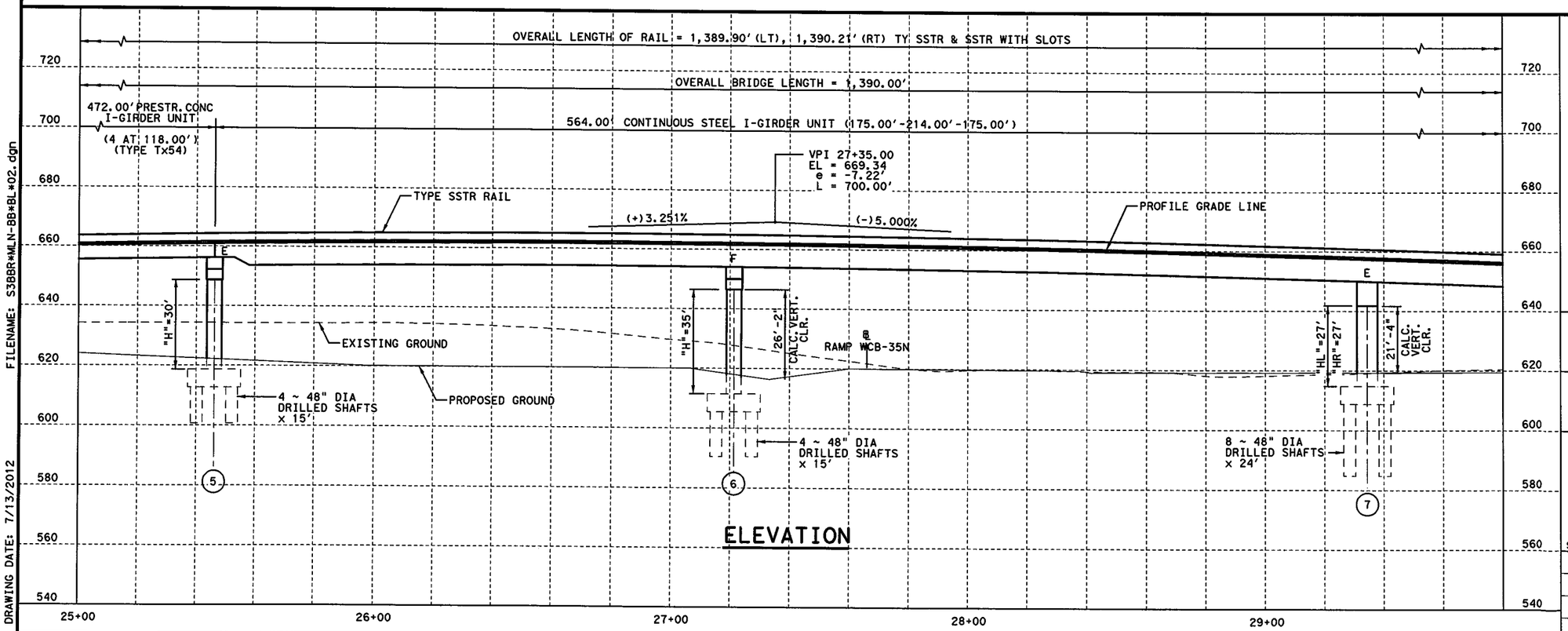

ELEVATION

FILENAME: S3BBR*MLN-BB*BL*02.dgn

DRAWING DATE: 7/13/2012

7/11/12

STATE OF TEXAS
CORBETT L. FREEMAN
86913
LICENSED PROFESSIONAL ENGINEER

I. S. ENGINEERS, LLC
TBPE REG. # F-11657

Texas Department of Transportation
© 2012

IH 35W FROM NORTH TARRANT PKWY TO IH 820

BRIDGE LAYOUT
NB IH35W EXIT RAMP FROM MANAGED LANES

SCALE: 1" = 40' H & V — SHEET 2 OF 4

DESIGN	FED.RD. DIV.NO.	FEDERAL AID PROJECT NO.		HIGHWAY NO.
CLF	6	(SEE TITLE SHEET)		IH 35W
GRAPHICS	STATE	DISTRICT	COUNTY	SHEET NO.
SPL	TEXAS	FTW	TARRANT	
CHECK	CONTROL	SECTION	JOB	1601
SB	0014	16	255, ETC.	
CHECK				
CLF				

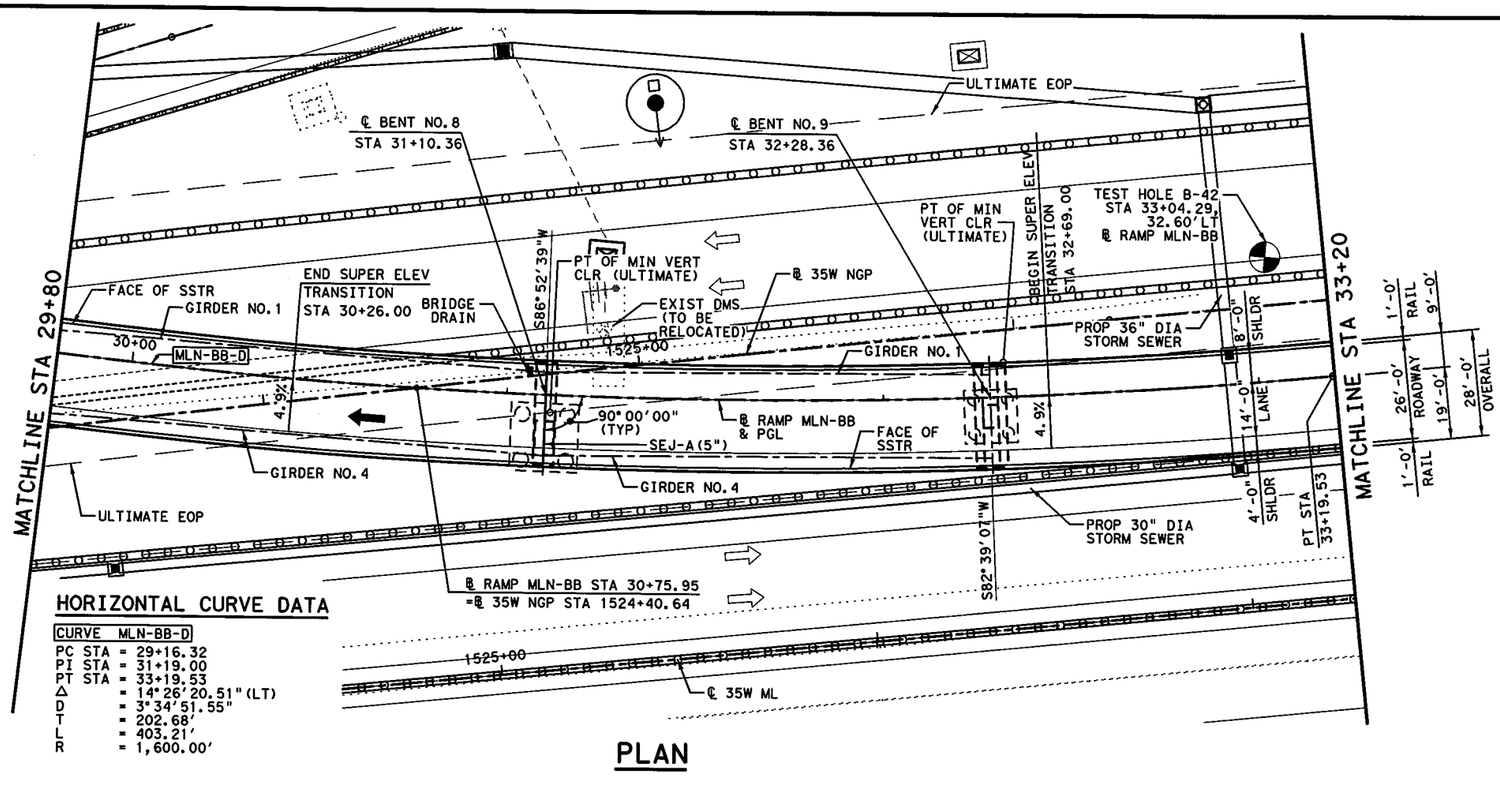

PLAN

HORIZONTAL CURVE DATA

CURVE MLN-BB-D	
PC STA	= 29+16.32
PI STA	= 31+19.00
PT STA	= 33+19.53
Δ	= 14°26'20.51" (LT)
D	= 3°34'51.55"
T	= 202.68'
L	= 403.21'
R	= 1,600.00'

NOTES:

FOR GENERAL NOTES, SEE SHEETS 1 OF 4.

0' 10' 20' 40'

SCALE IN FEET

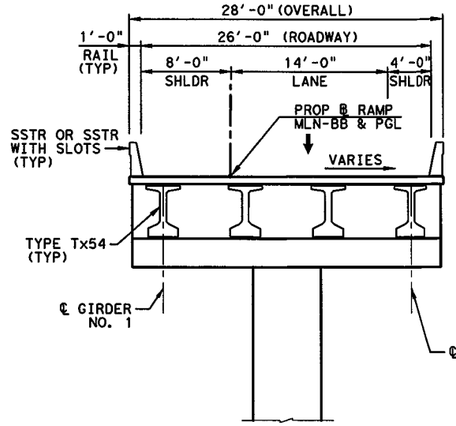

TYPICAL SECTION
SPANS 1-4, 8 - 10
(NTS, SHOWING BENT 9 & 10)

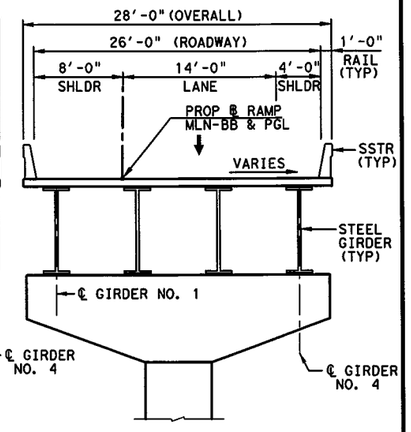

TYPICAL SECTION
SPANS 5 - 7
(NTS, SHOWING BENT 6)

HL 93 LOADING

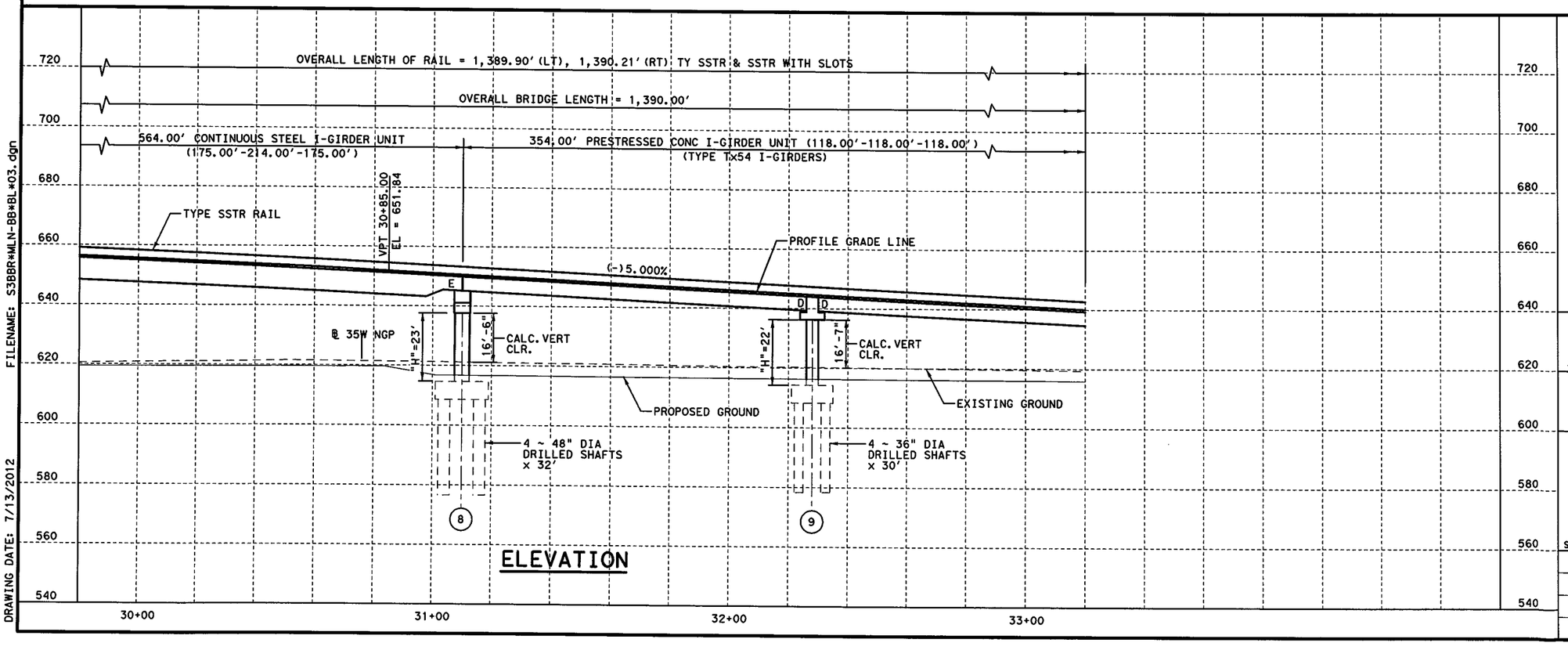

ELEVATION

DRAWING DATE: 7/13/2012
FILENAME: S38BR*MLN-BB*BL*03.dgn

7/11/12
STATE OF TEXAS
CORBETT L. FREEMAN
86913
LICENSED PROFESSIONAL ENGINEER

I. S. ENGINEERS, LLC
TBPE REG. # F-11657

Texas Department of Transportation
© 2012

IH 35W FROM NORTH TARRANT PKWY TO IH 820

BRIDGE LAYOUT
NB IH35W EXIT RAMP
FROM MANAGED LANES

SCALE: 1" = 40' H & V — SHEET 3 OF 4

DESIGN	FED.RD. DIV.NO.	FEDERAL AID PROJECT NO.		HIGHWAY NO.
CLF	6	(SEE TITLE SHEET)		IH 35W
GRAPHICS	STATE	DISTRICT	COUNTY	SHEET NO.
SPL	TEXAS	FTW	TARRANT	
CHECK	CONTROL	SECTION	JOB	1602
SB	0014	16	255, ETC.	
CHECK				
CLF				

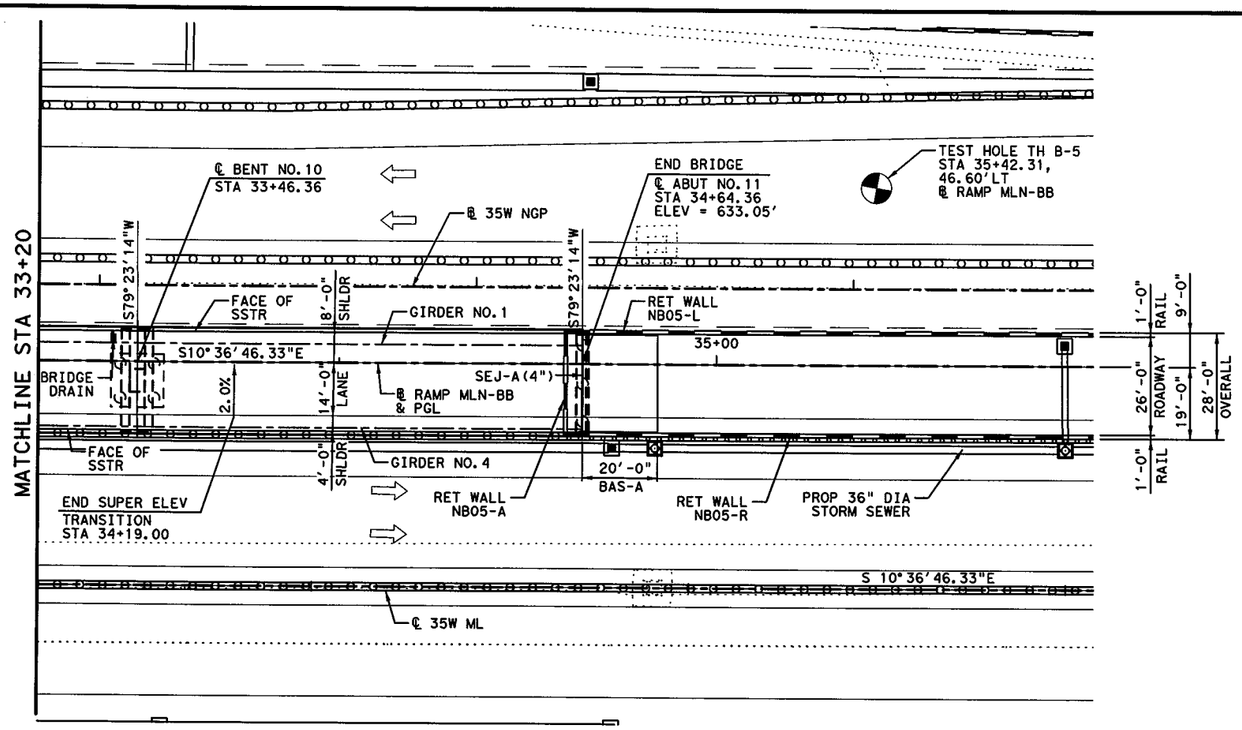

PLAN

NOTES:

1. FOR GENERAL NOTES, SEE SHEET 1 OF 4.
2. FOR TYPICAL SECTIONS, SEE SHEET 3 OF 4.

0' 10' 20' 40'

SCALE IN FEET

HL 93 LOADING

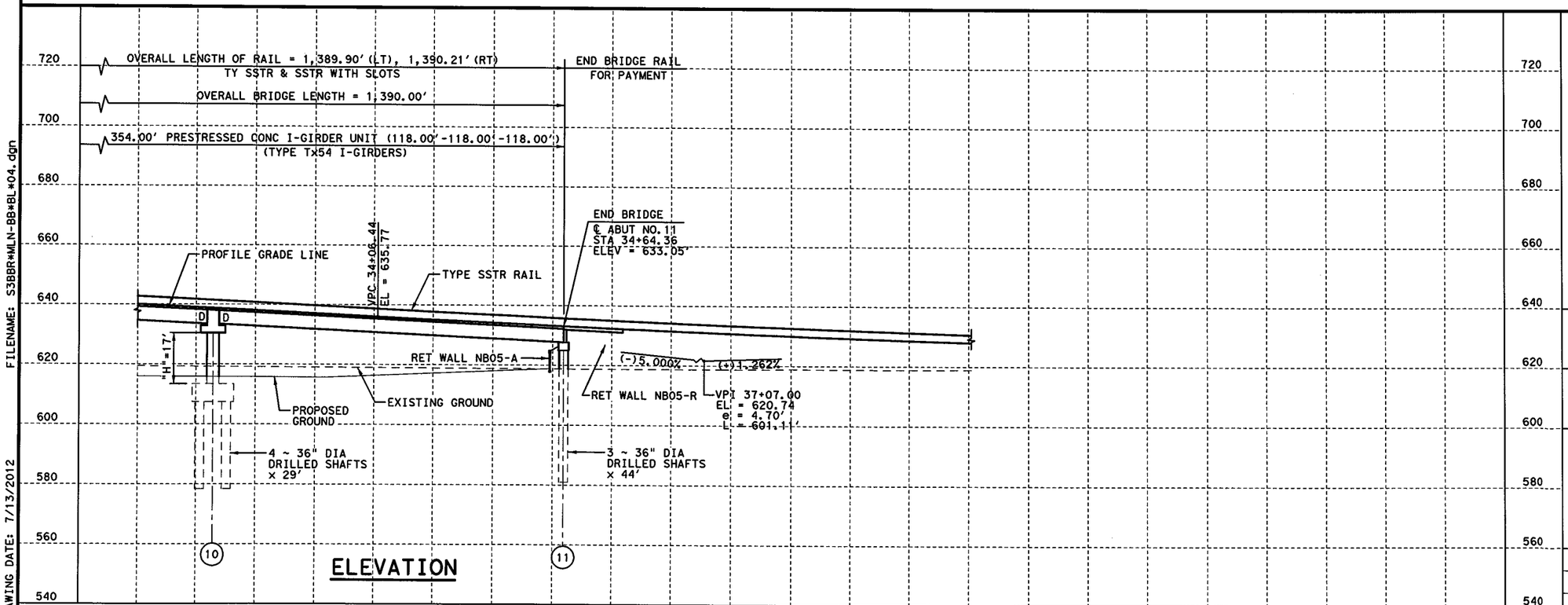

ELEVATION

FILENAME: S3BBR*MLN-BB*BL*04.dgn

DRAWING DATE: 7/13/2012

7/11/17

STATE OF TEXAS
CORBETT L. FREEMAN
86913
LICENSED
PROFESSIONAL ENGINEER

I. S. ENGINEERS, LLC
TBPE REG. # F-11657

Texas Department of Transportation
© 2012

IH 35W FROM NORTH TARRANT PKWY TO IH 820

BRIDGE LAYOUT
NB IH35W EXIT RAMP
FROM MANAGED LANES

SCALE: 1" = 40' H & V — SHEET 4 OF 4

DESIGN	FED.RD. DIV.NO.	FEDERAL AID PROJECT NO.		HIGHWAY NO.
CLF	6	(SEE TITLE SHEET)		IH 35W
GRAPHICS SPL	STATE	DISTRICT	COUNTY	SHEET NO.
CHECK SB	TEXAS	FTW	TARRANT	
CHECK CLF	CONTROL	SECTION	JOB	1603
	0014	16	255, ETC.	

SUMMARY OF ESTIMATED QUANTITIES

BID ITEM	403 2001	416 2004	416 2006	420 2018	420 2041	420 2042	420 2092	420 2093	420 2256	420 2278	422 2003	425 2068	426 2001	428 2002
BID ITEM DESCRIPTION / BRIDGE ELEMENT	TEMPORARY SPL SHORING	DRILL SHAFT	DRILL SHAFT	CL C CONC (MASS PLACEMENT)	CL C CONC (HPC)	CL C CONC (HPC)	CL C CONC (MASS PLACEMENT) (HPC)	CL C CONC (MASS PLACEMENT) (HPC)	CL S CONC (HPC)	CL F CONC (MASS PLACEMENT) (HPC)	REINF CONC SLAB (HPC) (CL S)	PRESTR CONC GIRDER (TX54)	POST-TENSIONING (GROUTED)	CONC SURF TREATMENT (CLASS II)
		(36 IN)	(48 IN)	(FOOTING)	(ABUT)	(BENT)	(CAP)	(COLUMN)	(APPR SLAB)	(CAP)				
	SF	LF	LF	CY	CY	CY	CY	CY	CY	CY	SF	LF	MKF	SY
2 - ABUTMENTS		231			26.0				41					97
9 - INTERIOR BENTS	5,760	412	440	578.0		231.3	108.0	244.6		187.6			285	532
1 - 472.000' PRESTRESSED CONCRETE I-GIRDER UNIT (SPANS 1-4)											13,205	1,879.01		1341
1 - 564.000' STEEL PLATE GIRDER UNIT (SPANS 5-7)											15,787			1603
1 - 354.000' PRESTRESSED CONCRETE I-GIRDER UNIT (SPANS 8 - 10)											9,912	1,382.56		1006
TOTALS	5,760	643	440	578.0	26.0	231.3	108.0	244.6	41	187.6	38,904	3,261.57	285	4,579

SUMMARY OF ESTIMATED QUANTITIES

BID ITEM	432 2001	434 2040	434 2041	434 2118	442 2002	450 2102	454 2001	454 2009	471 2003	481 2013
BID ITEM DESCRIPTION / BRIDGE ELEMENT	RIPRAP (CONC)	ELASTOMERIC BEAR	ELASTOMERIC BEAR	ELASTOMERIC BEAR	STR STL (PLATE GIRDER)	RAIL (TYPE SSTR) (HPC)	SEALED EXPANSION JOINT (4 IN) (SEJ-A)	SEALED EXPANSION JOINT (5 IN) (SEJ-A)	GRATE & FRAME	PVC PIPE (SCH 40) (8")
	(4 IN)	(E9)	(F9)	(ES5)						
	CY	EA	EA	EA	LB	LF	LF	LF	EA	LF
2 - ABUTMENTS	1						54			
9 - INTERIOR BENTS	36						27	27		
1 - 472.000' PRESTRESSED CONCRETE I-GIRDER UNIT (SPANS 1-4)						943.2				
1 - 564.000' STEEL PLATE GIRDER UNIT (SPANS 5-7)		4	4	8	831,700	1127.6			3	278
1 - 354.000' PRESTRESSED CONCRETE I-GIRDER UNIT (SPANS 8 - 10)						709.3			1	5
TOTALS	37	4	4	8	831,700	2,780.1	81	27	4	283

BEARING SEAT ELEVATIONS

		BEAM 1	BEAM 2	BEAM 3	BEAM 4
ABUT 1	(FWD)	642.838	642.985	643.131	643.278
BENT 2	(BK)	645.781	645.928	646.075	646.221
	(FWD)	645.928	646.074	646.221	646.368
BENT 3	(BK)	649.793	649.820	649.847	649.873
	(FWD)	649.861	649.884	649.907	649.931
BENT 4	(BK)	653.777	653.493	653.209	652.924
	(FWD)	653.836	653.546	653.257	652.967
BENT 5	(BK)	656.223	655.915	655.607	655.298
	(FWD)	655.855	655.547	655.239	654.931
BENT 6		654.635	654.389	654.081	653.732
BENT 7		650.058	650.241	650.361	650.418
BENT 8	(BK)	644.245	644.604	644.963	645.322
	(FWD)	644.575	644.935	645.295	645.654
BENT 9	(BK)	638.873	639.231	639.590	639.949
	(FWD)	638.572	638.932	639.292	639.652
BENT 10	(BK)	633.051	633.304	633.558	633.812
	(FWD)	632.734	632.979	633.224	633.469
ABUT 11	(BK)	627.283	627.430	627.577	627.723

7/11/12

STATE OF TEXAS
CORBETT L. FREEMAN
86913
LICENSED
PROFESSIONAL ENGINEER

I. S. ENGINEERS, LLC
TBPE REG. # F-11657

Texas Department of Transportation

© 2012

IH 35W FROM NORTH TARRANT PKWY TO IH 820

EST. QUANTITIES AND BEARING SEAT ELEV.

NB IH35W EXIT RAMP FROM MANAGED LANES

SCALE: NTS — SHEET 1 OF 1

DESIGN	FED.RD. DIV.NO.	FEDERAL AID PROJECT NO.		HIGHWAY NO.
CLF	6	(SEE TITLE SHEET)		IH 35W
GRAPHICS CLF	STATE	DISTRICT	COUNTY	SHEET NO.
CHECK AXD/SB	TEXAS	FTW	TARRANT	1604
CHECK CLF	CONTROL	SECTION	JOB	
	0014	16	255, ETC.	

FILENAME: S3BBR*MLN-BB*EQ*01.dgn

DRAWING DATE: 7/13/2012

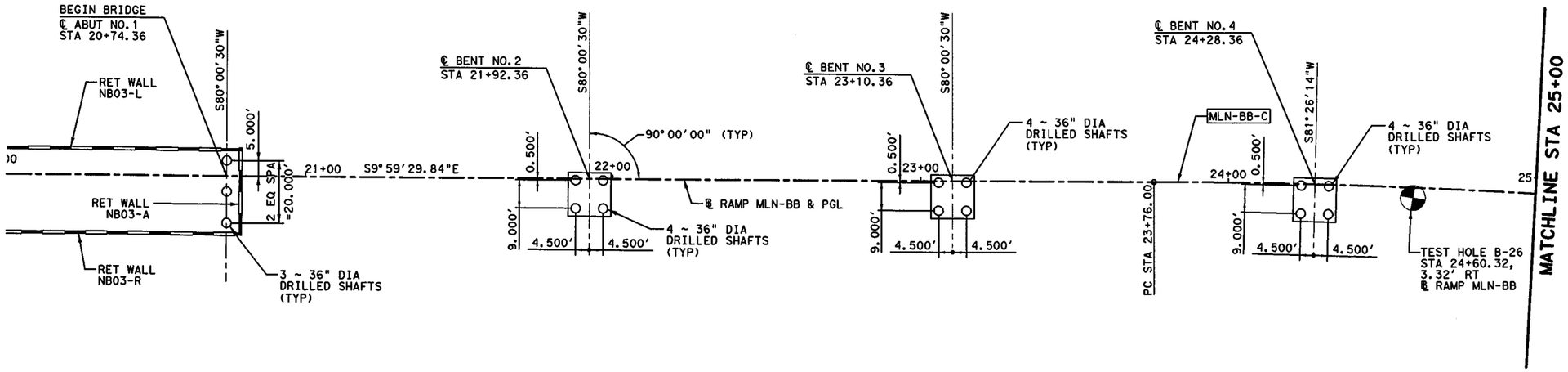

GENERAL NOTES:

1. FOR ANY TEMPORARY SHORING REQUIRED AT INTERIOR BENT LOCATIONS, FOLLOW TxDOT STANDARD SPECIFICATION ITEM 403.
2. SEE SOIL "BORING LOGS - BRIDGE" SHEETS FOR TEST HOLE INFORMATION.
3. ⊕ DENOTES TEST HOLE LOCATION.
4. CONTRACTOR TO VERIFY LOCATION OF ALL UTILITIES PRIOR TO EXCAVATION.

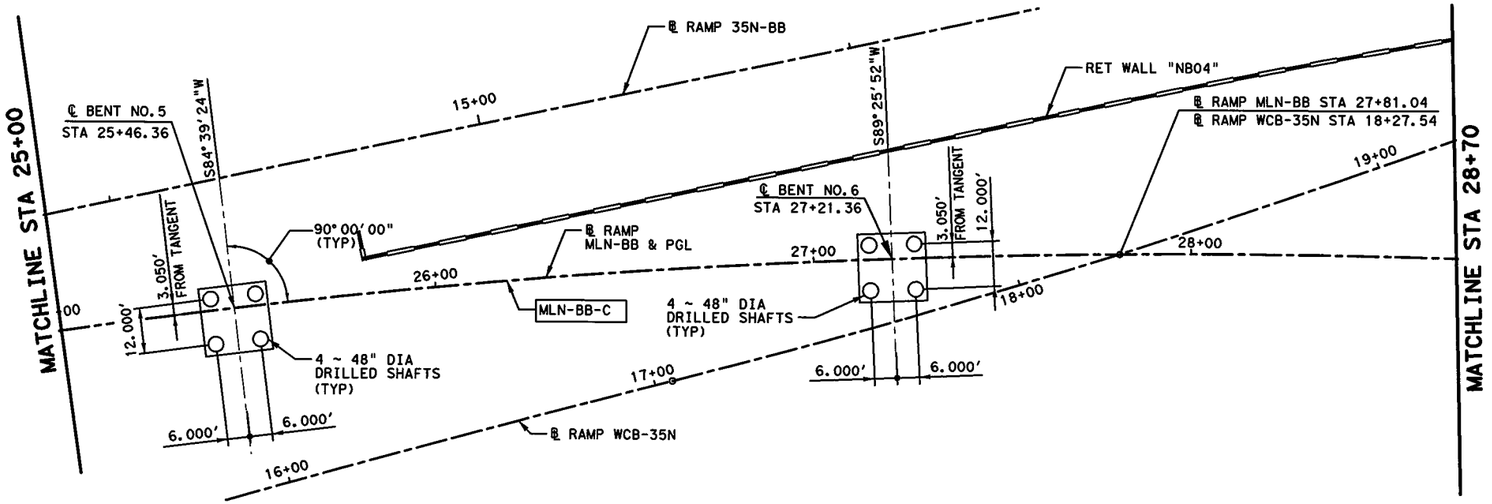

HORIZONTAL CURVE DATA

CURVE MLN-BB-C	
PC STA	= 23+76.00
PI STA	= 26+30.45
PT STA	= 28+82.44
Δ	= 13° 49' 04.02" (RT)
D	= 2° 43' 42.13"
T	= 254.46'
L	= 506.45'
R	= 2,100.00'

7/11/12
STATE OF TEXAS
CORBETT L. FREEMAN
86913
LICENSED
PROFESSIONAL ENGINEER

HL 93 LOADING

I. S. ENGINEERS, LLC
TBPE REG. # F-11657

Texas Department of Transportation
© 2012

IH 35W FROM NORTH TARRANT PKWY TO IH 820

FOUNDATION LAYOUT
NB IH35W EXIT RAMP FROM MANAGED LANES

SCALE: 1" = 40' SHEET 1 OF 2

DESIGN	FED.RD. DIV.NO.	FEDERAL AID PROJECT NO.		HIGHWAY NO.
CLF	6	(SEE TITLE SHEET)		IH 35W
GRAPHICS AXD	STATE	DISTRICT	COUNTY	SHEET NO.
CHECK SB	TEXAS	FTW	TARRANT	
CHECK CLF	CONTROL	SECTION	JOB	1605
	0014	16	255, ETC.	

FILENAME: S3BBR*MLN-BB*FL*01.dgn
DRAWING DATE: 7/13/2012

NOTE:

FOR GENERAL NOTES SEE SHEET 1 OF 2.

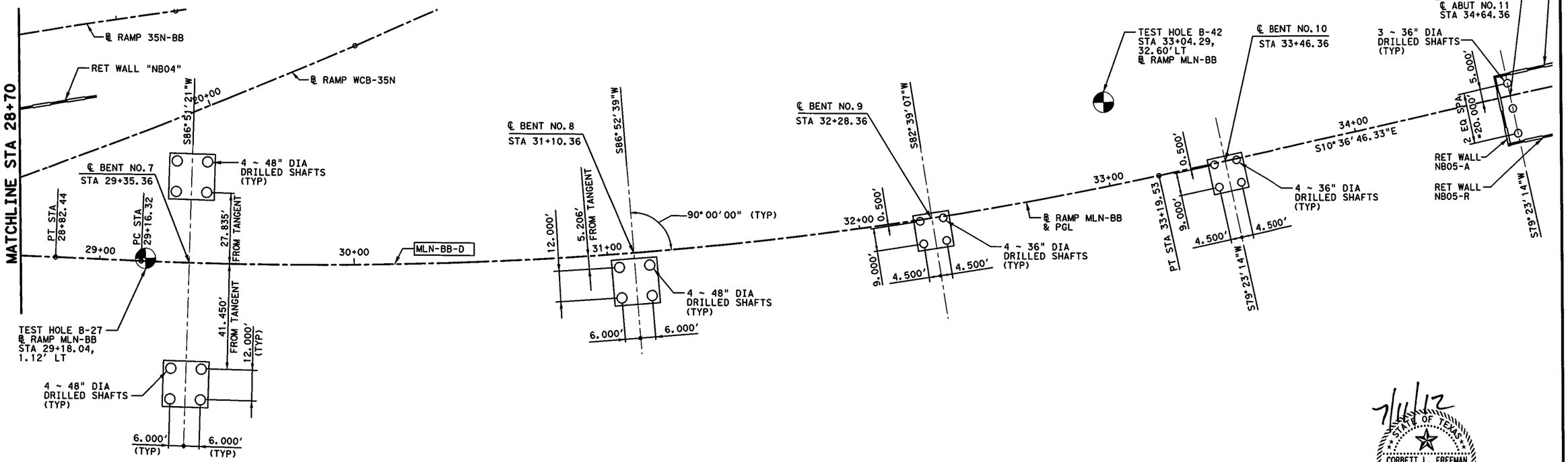

HORIZONTAL CURVE DATA

CURVE	MLN-BB-D
PC STA	= 29+16.32
PI STA	= 31+19.00
PT STA	= 33+19.53
Δ	= 14° 26' 20.51" (LT)
D	= 3° 34' 51.55"
T	= 202.68'
L	= 403.21'
R	= 1,600.00'

7/11/12

STATE OF TEXAS
CORBETT L. FREEMAN
86913
LICENSED
PROFESSIONAL ENGINEER

HL 93 LOADING

I. S. ENGINEERS, LLC
TBPE REG. # F-11657

Texas Department of Transportation
© 2012

IH 35W FROM NORTH TARRANT PKWY TO IH 820

FOUNDATION LAYOUT
NB IH35W EXIT RAMP FROM MANAGED LANES

SCALE: 1" = 40'

SHEET 2 OF 2

DESIGN	FED.RD. DIV.NO.	FEDERAL AID PROJECT NO.		HIGHWAY NO.
CLF	6	(SEE TITLE SHEET)		IH 35W
GRAPHICS AXD	STATE	DISTRICT	COUNTY	SHEET NO.
CHECK SB	TEXAS	FTW	TARRANT	1606
CHECK CLF	CONTROL	SECTION	JOB	
	0014	16	255, ETC.	

DRAWING DATE: 7/13/2012 FILENAME: S3BBR*MLN-BB*FL*02.dgn

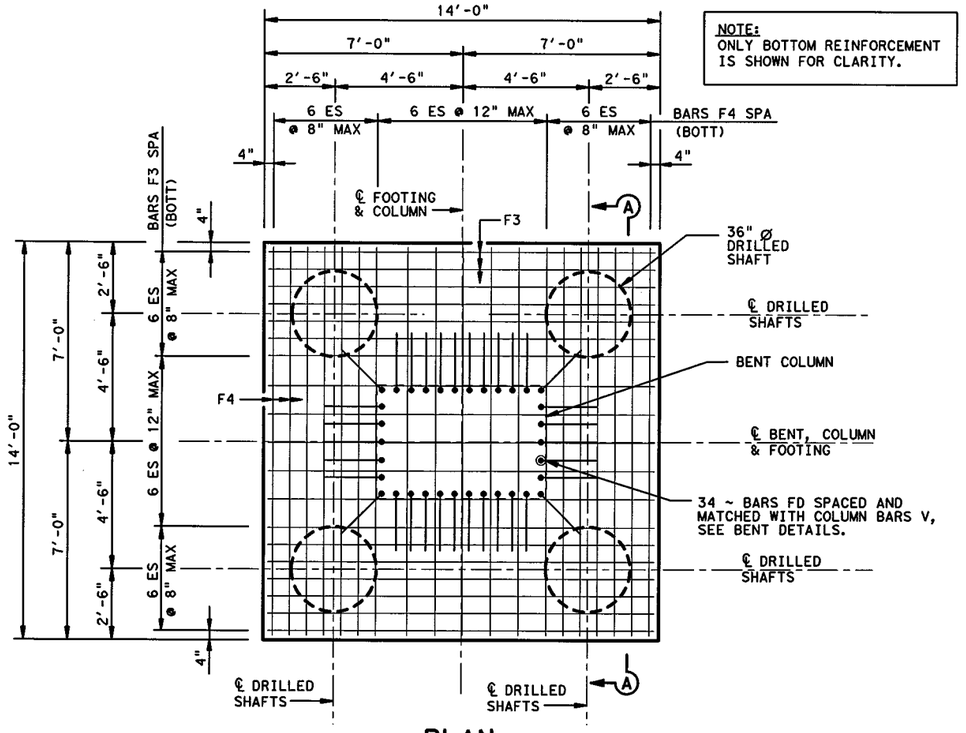

PLAN

NOTE:
ONLY BOTTOM REINFORCEMENT IS SHOWN FOR CLARITY.

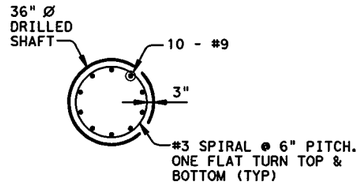

SECTION B-B

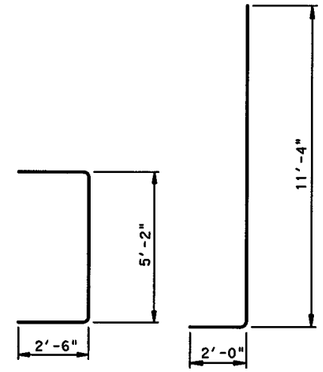

BARS U BARS FD

TABLE OF QUANTITIES (ONE FOOTING)

BAR	No.	SIZE	LENGTH	WEIGHT
F1	15	#6	13'- 8"	308
F2	15	#6	13'- 8"	308
F3	31	#11	13'- 8"	2,251
F4	31	#11	13'- 8"	2,251
FD	34	#11	13'- 4"	2,409
T1	10	#7	13'- 8"	279
T2	10	#7	13'- 8"	279
U	30	#6	10'- 2"	458
REINFORCING STEEL *			LB	8,543
CL C CONC (FOOTING) (MASS)			CY	43.6
RIPRAP (CONC) (4 IN)			CY	2.8

* FOR CONTRACTOR'S INFORMATION ONLY.

NOTES:

DESIGNED FOR HL93 LOADING IN ACCORDANCE WITH CURRENT AASHTO LRFD SPECIFICATIONS AND INTERIMS.

ALL REINFORCING STEEL SHALL BE GRADE 60.

ALL CAST-IN-PLACE CONCRETE SHALL BE CLASS "C" f'c = 3,600 psi.

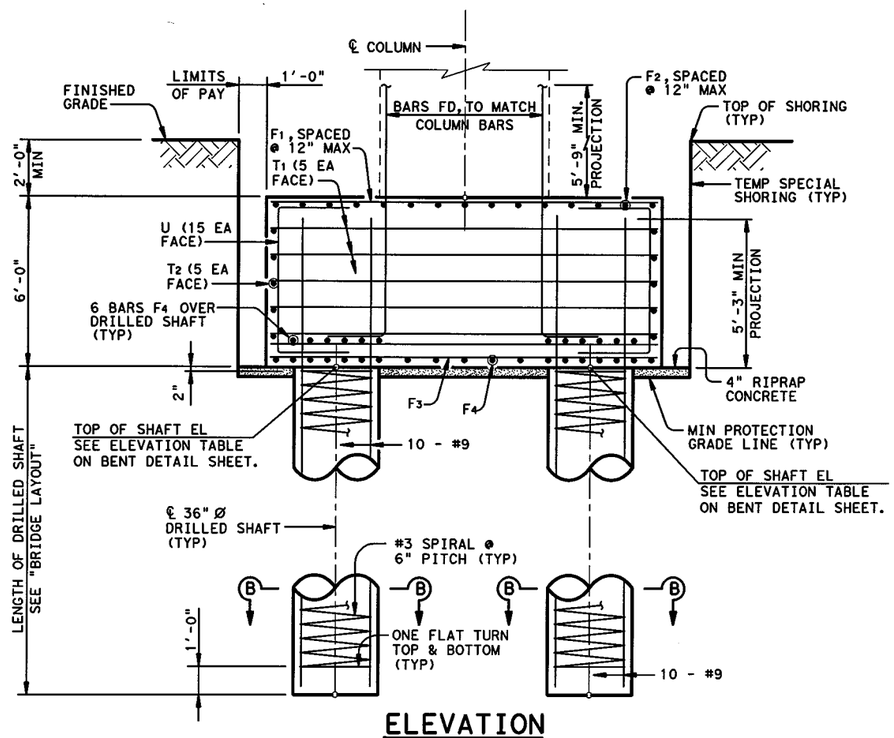

ELEVATION

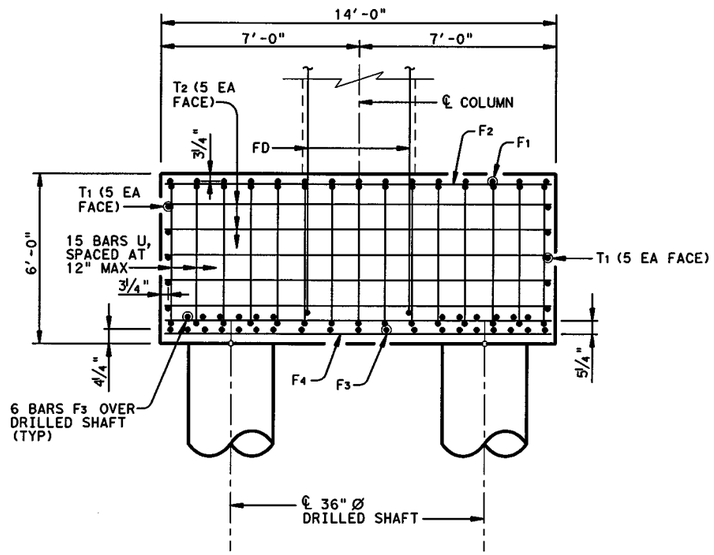

SECTION A-A

7/28/12
STATE OF TEXAS
CORBETT L. FREEMAN
86913
LICENSED PROFESSIONAL ENGINEER

HL 93 LOADING

I. S. ENGINEERS, LLC
TBPE REG. # F-11657

Texas Department of Transportation
© 2012

IH 35W FROM NORTH TARRANT PKWY TO IH 820

FOOTING DETAILS - BENTS 2-4, 9-10
NB IH35W EXIT RAMP FROM MANAGED LANES

SCALE: NTS — SHEET 1 OF 1

DESIGN	FED.RD. DIV.NO.	FEDERAL AID PROJECT NO.		HIGHWAY NO.
CLF	6	(SEE TITLE SHEET)		IH 35W
GRAPHICS AXD	STATE	DISTRICT	COUNTY	SHEET NO.
CHECK SB	TEXAS	FTW	TARRANT	1607
CHECK CLF	CONTROL 0014	SECTION 16	JOB 255, ETC.	

DRAWING DATE: 7/28/2012 FILENAME: S35BR*MLN-BB*FD*01.dgn

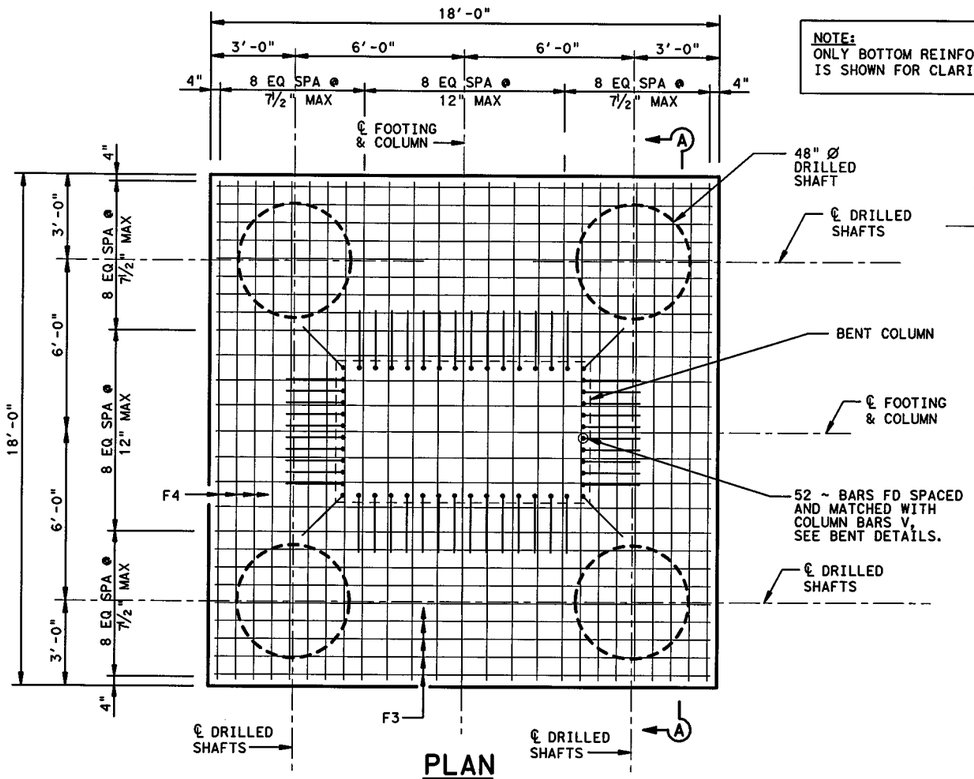

PLAN
(BENTS 5 & 6 SHOWN)

NOTE:
ONLY BOTTOM REINFORCEMENT IS SHOWN FOR CLARITY.

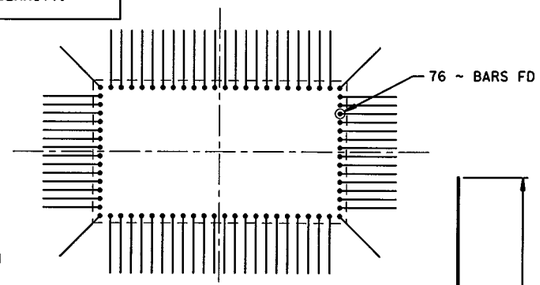

DOWEL DETAILS FOR BENT 8

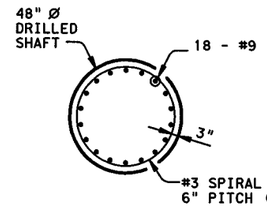

SECTION B-B

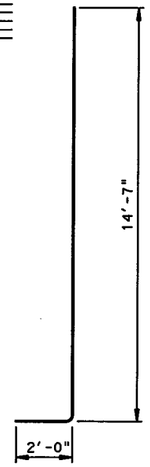

BARS FD

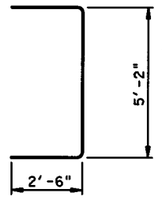

BARS U

TABLE OF QUANTITIES (ONE FOOTING)@ BENT 8

BAR	No.	SIZE	LENGTH	WEIGHT
F1	19	#6	17'- 8"	504
F2	19	#6	17'- 8"	504
F3	41	#11	17'- 8"	3,848
F4	41	#11	17'- 8"	3,848
FD	76	#11	16'- 7"	6,696
T1	10	#7	17'- 8"	361
T2	10	#7	17'- 8"	361
U	38	#6	10'- 2"	580
REINFORCING STEEL*			LB	16,702
CL C CONC (FOOTING) (MASS)			CY	72.0
RIPRAP (CONC) (4 IN)			CY	4.3

TABLE OF QUANTITIES (ONE FOOTING)@ BENTS 5 & 6

BAR	No.	SIZE	LENGTH	WEIGHT
F1	19	#6	17'- 8"	504
F2	19	#6	17'- 8"	504
F3	41	#11	17'- 8"	3,848
F4	41	#11	17'- 8"	3,848
FD	52	#11	16'- 7"	4,582
T1	10	#7	17'- 8"	361
T2	10	#7	17'- 8"	361
U	38	#6	10'- 2"	580
REINFORCING STEEL*			LB	14,588
CL C CONC (FOOTING) (MASS)			CY	72.0
RIPRAP (CONC) (4 IN)			CY	4.3

* FOR CONTRACTOR'S INFORMATION ONLY.

NOTES:

DESIGNED FOR HL93 LOADING IN ACCORDANCE WITH CURRENT AASHTO LRFD SPECIFICATIONS AND INTERIMS.

ALL REINFORCING STEEL SHALL BE GRADE 60.

ALL CAST-IN-PLACE CONCRETE SHALL BE CLASS "C" f'c = 3,600 psi.

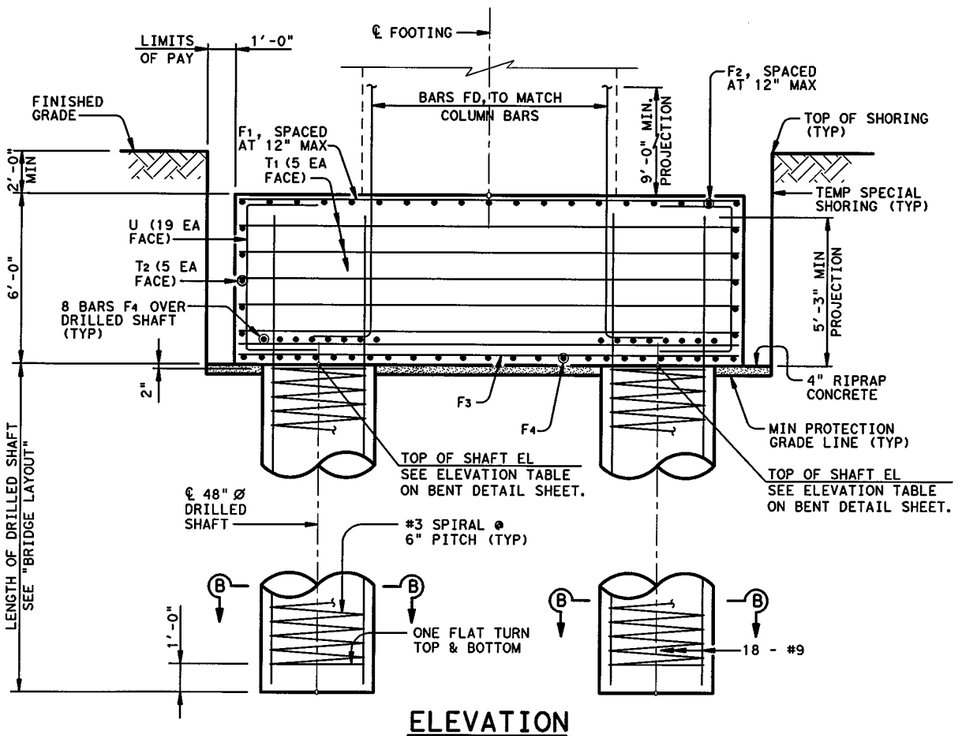

ELEVATION

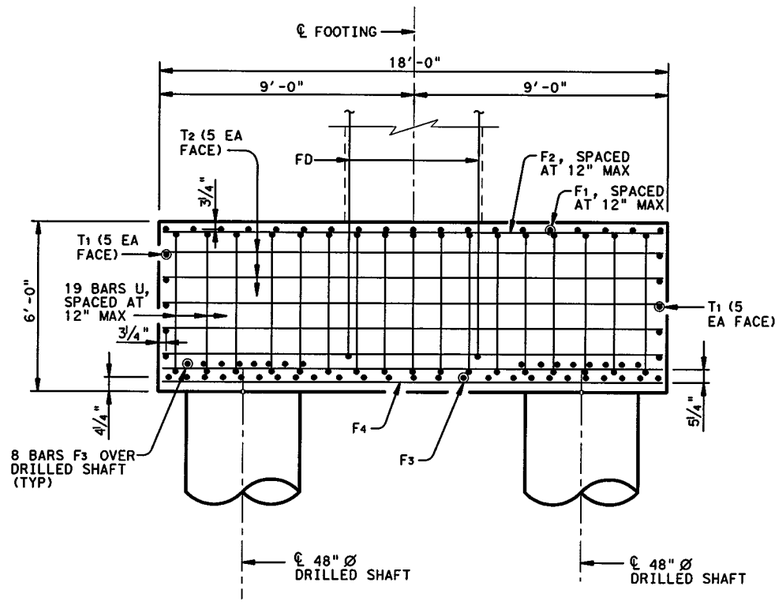

SECTION A-A

7/28/12
STATE OF TEXAS
CORBETT L. FREEMAN
86913
LICENSED
PROFESSIONAL ENGINEER

HL 93 LOADING

I. S. ENGINEERS, LLC
TBPE REG. # F-11657

Texas Department of Transportation
© 2012

IH 35W FROM NORTH TARRANT PKWY TO IH 820

FOOTING DETAILS - BENTS 5, 6 & 8
NB IH35W EXIT RAMP
FROM MANAGED LANES

SCALE: NTS — SHEET 1 OF 1

DESIGN	FED.RD. DIV.NO.	FEDERAL AID PROJECT NO.		HIGHWAY NO.
CLF	6	(SEE TITLE SHEET)		IH 35W
GRAPHICS AXD	STATE	DISTRICT	COUNTY	SHEET NO.
CHECK SB	TEXAS	FTW	TARRANT	1608
CHECK CLF	CONTROL 0014	SECTION 16	JOB 255, ETC.	

DRAWING DATE: 7/28/2012 FILENAME: S3BBR*MLN-BB*FD*02.dgn

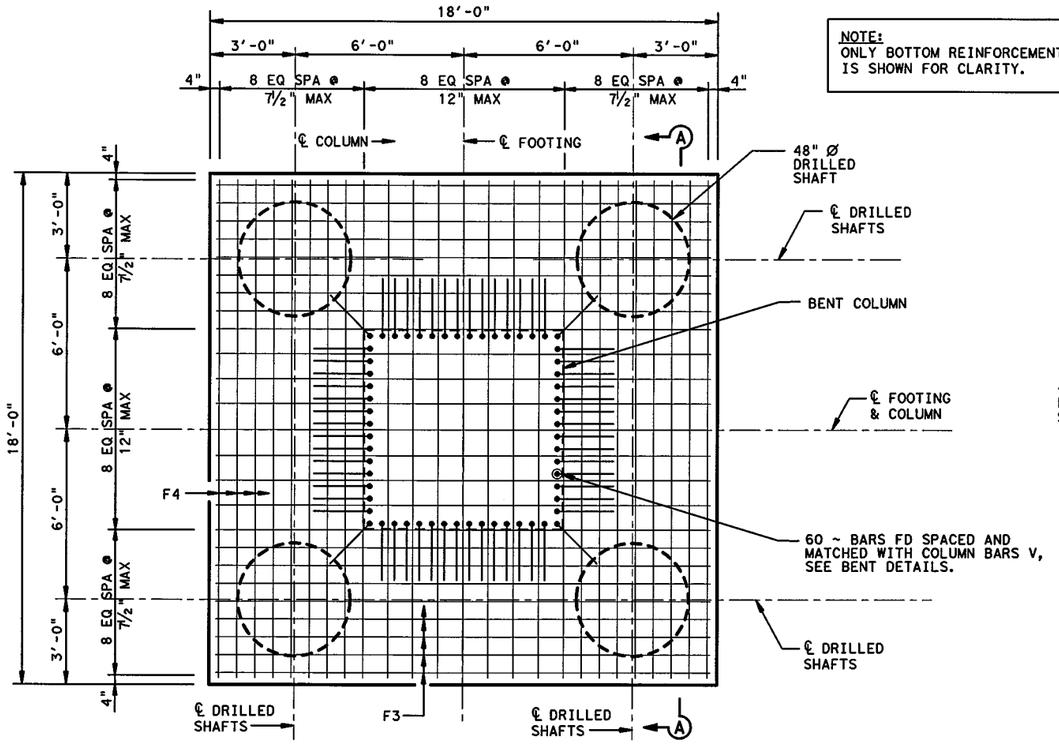

NOTE:
ONLY BOTTOM REINFORCEMENT IS SHOWN FOR CLARITY.

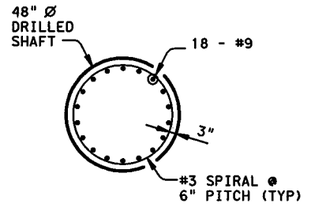

SECTION B-B

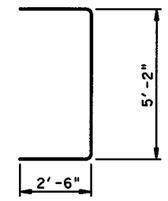

BARS U

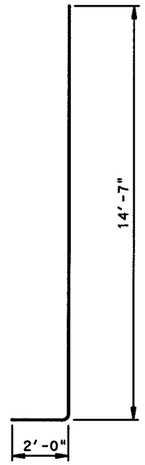

BARS FD

TABLE OF QUANTITIES (ONE FOOTING)

BAR	No.	SIZE	LENGTH	WEIGHT
F1	19	#6	17'- 8"	504
F2	19	#6	17'- 8"	504
F3	41	#11	17'- 8"	3,848
F4	41	#11	17'- 8"	3,848
FD	60	#11	16'- 7"	5,286
T1	10	#7	17'- 8"	361
T2	10	#7	17'- 8"	361
U	38	#6	10'- 2"	580
REINFORCING STEEL*			LB	15,292
CL C CONC (FOOTING) (MASS)			CY	72.0
RIPRAP (CONC) (4 IN)			CY	4.3

* FOR CONTRACTOR'S INFORMATION ONLY.

NOTES:

DESIGNED FOR HL93 LOADING IN ACCORDANCE WITH CURRENT AASHTO LRFD SPECIFICATIONS AND INTERIMS.

ALL REINFORCING STEEL SHALL BE GRADE 60.

ALL CAST-IN-PLACE CONCRETE SHALL BE CLASS "C" f'c = 3,600 psi.

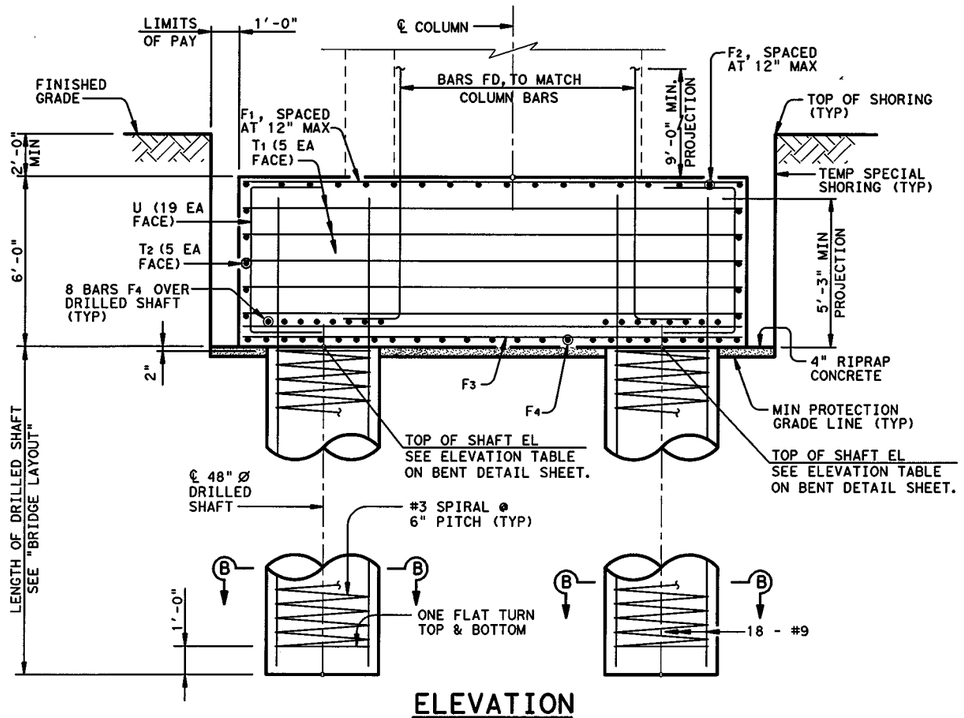

ELEVATION

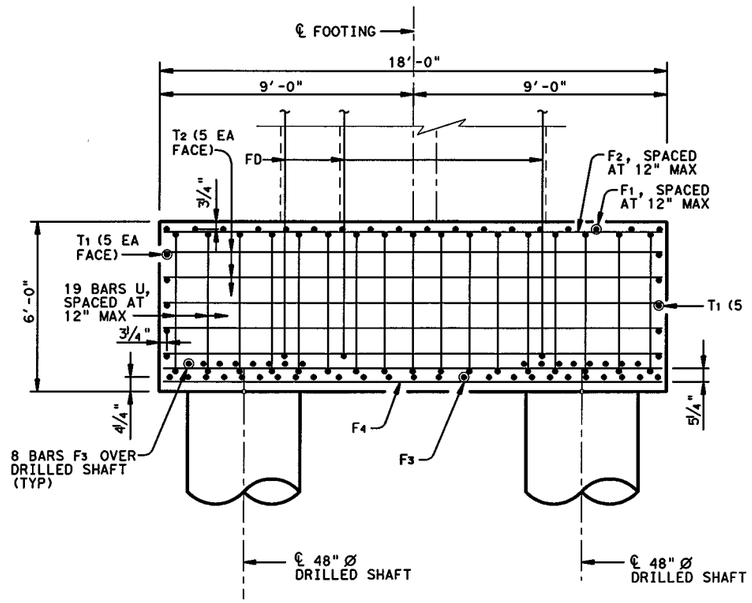

SECTION A-A

7/28/12
STATE OF TEXAS
CORBETT L. FREEMAN
86913
LICENSED PROFESSIONAL ENGINEER

HL 93 LOADING

I. S. ENGINEERS, LLC
TBPE REG. # F-11657

Texas Department of Transportation
© 2012

IH 35W FROM NORTH TARRANT PKWY TO IH 820

FOOTING DETAILS - BENT 7
NB IH35W EXIT RAMP TO MANAGED LANES

SCALE: NTS — SHEET 1 OF 1

DESIGN	FED.RD. DIV.NO.	FEDERAL AID PROJECT NO.		HIGHWAY NO.
CLF	6	(SEE TITLE SHEET)		IH 35W
GRAPHICS AXD	STATE	DISTRICT	COUNTY	SHEET NO.
CHECK SB	TEXAS	FTW	TARRANT	1609
CHECK CLF	CONTROL	SECTION	JOB	
	0014	16	255, ETC.	

FILENAME: S3BBR#MLN-BB#FD#03.dgn
DRAWING DATE: 7/28/2012

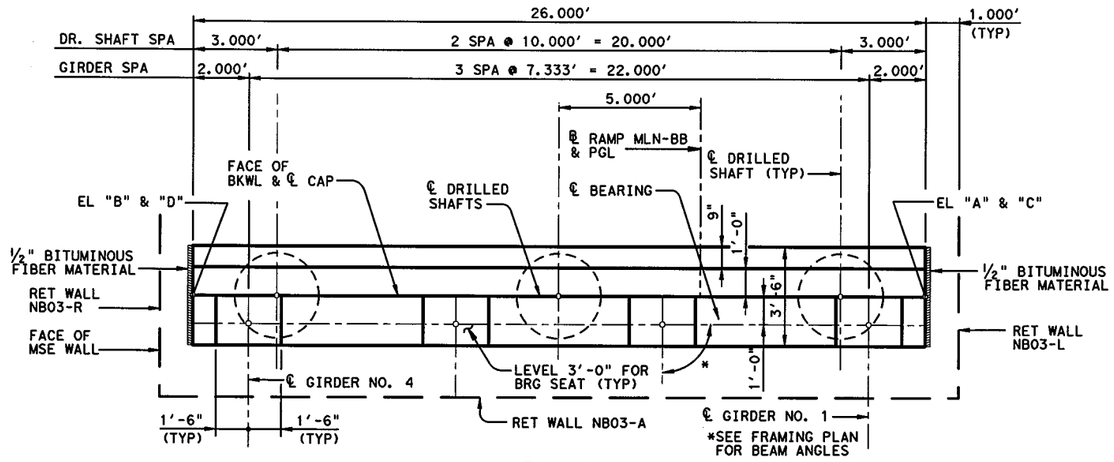

PLAN

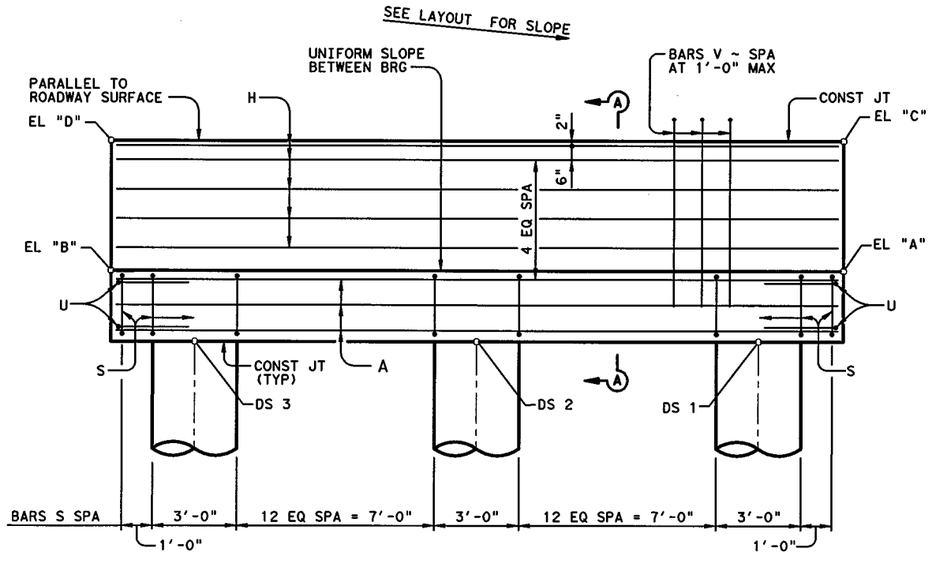

ELEVATION

TABLE OF ELEVATIONS				
CAP	"A"	"B"	"C"	"D"
	642.673	643.193	647.486	648.006
DRILL SHAFT	DS 1	DS 2	DS 3	
	640.233	640.433	640.633	
DS TIP	607.233	607.433	607.633	
AS-BUILT DS TIP				

GENERAL NOTES:

DESIGNED ACCORDING TO AASHTO LRFD SPECIFICATIONS, 5TH EDITION (2010).

CLASS"C"(HPC) CONCRETE STRENGTH F'C = 3,600 PSI.

ALL CAP AND WALL REINFORCING SHALL BE GRADE 60.

SEE FD STANDARD FOR ALL FOUNDATION DETAILS AND NOTES.

CALCULATED FOUNDATION LOADS:
CAP DRILLED SHAFTS = 180 TONS/D.S.

TABLE OF ESTIMATED QUANTITIES				
BAR	NO.	SIZE	LENGTH	WEIGHT
A	11	#11	25'-8"	1,500
H	10	#5	25'-8"	268
S	30	#5	11'-4"	355
U	4	#6	8'-0"	48
V	27	#5	14'-2"	399
REINFORCING STEEL			LBS	2,570
CL "C" CONCRETE(HPC)(ABUT)			CY	13.0

(1) INCREASE AS REQUIRED TO MAINTAIN 3¾" FROM FINISHED GRADE.

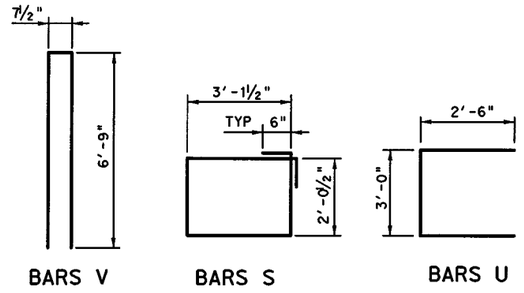

BARS V BARS S BARS U

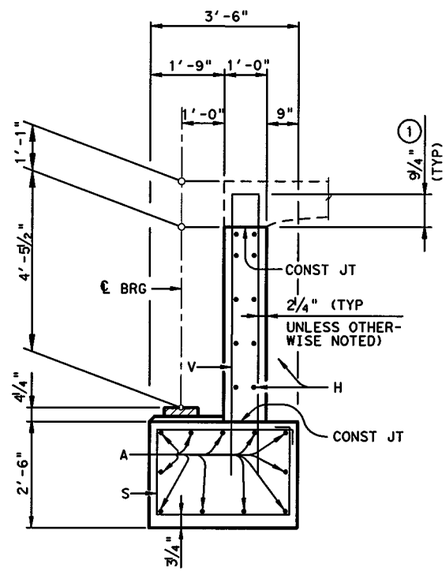

SECTION A-A

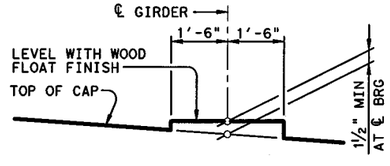

BEARING SEAT DETAIL

(BEARING SURFACE SHALL BE CLEAN AND FREE OF ALL LOOSE MATERIAL BEFORE PLACING BEARING PAD.)

THE FRONT AND BACK, BACKWALL FACES, SIDES, AND TOP, EXCEPT UNDER BEARING AREAS, SHALL BE TREATED WITH A "CLASS II, TYPE I PENETRATING CONCRETE SURFACE TREATMENT".

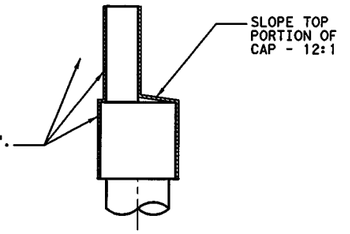

CONCRETE SURFACE TREATMENT DETAIL FOR ABUTMENT

7/28/12
STATE OF TEXAS
CORBETT L. FREEMAN
86913
LICENSED PROFESSIONAL ENGINEER

HL 93 LOADING

I. S. ENGINEERS, LLC
TBPE REG. # F-11657

Texas Department of Transportation
© 2012

IH 35W FROM NORTH TARRANT PKWY TO IH 820

ABUTMENT NO. 1

NB IH35W EXIT RAMP FROM MANAGED LANES

SCALE: NTS — SHEET 1 OF 1

DESIGN	FED.RD. DIV.NO.	FEDERAL AID PROJECT NO.		HIGHWAY NO.
ZS	6	(SEE TITLE SHEET)		IH 35W
GRAPHICS SPL	STATE	DISTRICT	COUNTY	SHEET NO.
CHECK CLF	TEXAS	FTW	TARRANT	1610
CHECK CLF	CONTROL	SECTION	JOB	
	0014	16	255, ETC.	

DRAWING DATE: 7/28/2012 FILENAME: S38BR#MLN-BB#AB#01.dgn

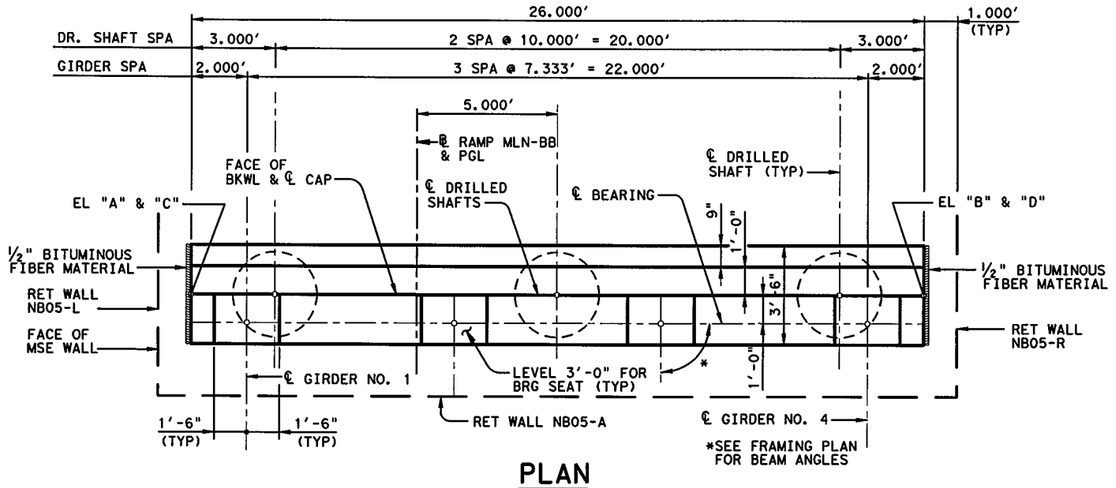

PLAN

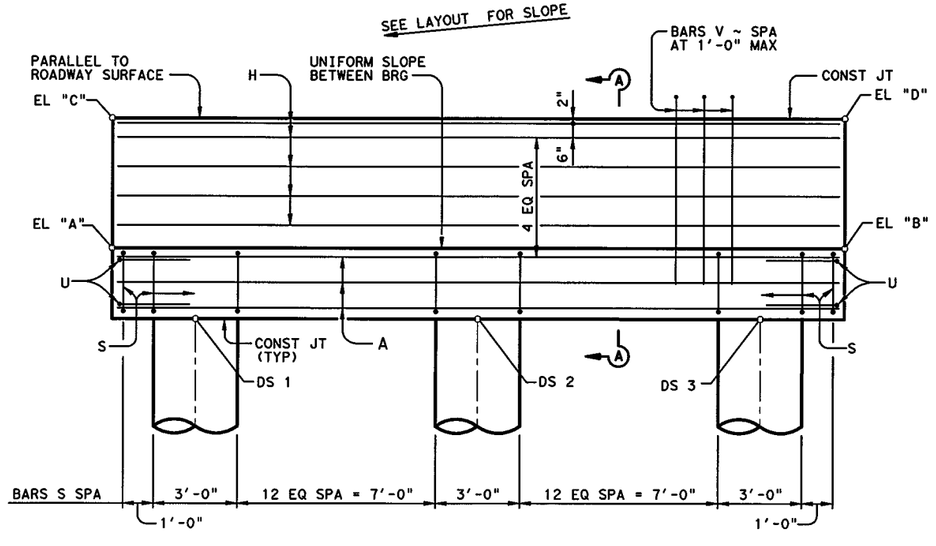

ELEVATION

TABLE OF ELEVATIONS				
CAP	"A"	"B"	"C"	"D"
	627.118	627.638	631.847	632.367
DRILL SHAFT	DS 1	DS 2	DS 3	
	624.678	624.878	625.078	
DS TIP	580.678	580.878	581.078	
AS-BUILT DS TIP				

GENERAL NOTES:

DESIGNED ACCORDING TO AASHTO LRFD SPECIFICATIONS, 5TH EDITION (2010).

CLASS"C"(HPC) CONCRETE STRENGTH F'C = 3,600 PSI.

ALL CAP AND WALL REINFORCING SHALL BE GRADE 60.

SEE FD STANDARD FOR ALL FOUNDATION DETAILS AND NOTES.

CALCULATED FOUNDATION LOADS:
CAP DRILLED SHAFTS = 180 TONS/D.S.

TABLE OF ESTIMATED QUANTITIES				
BAR	NO.	SIZE	LENGTH	WEIGHT
A	11	#11	25'-8"	1,500
H	10	#5	25'-8"	268
S	30	#5	11'-4"	355
U	4	#6	8'-0"	48
V	27	#5	14'-2"	399
REINFORCING STEEL			LBS	2,570
CL "C" CONCRETE(HPC)(ABUT)			CY	13.0

(1) INCREASE AS REQUIRED TO MAINTAIN 3 3/4" FROM FINISHED GRADE.

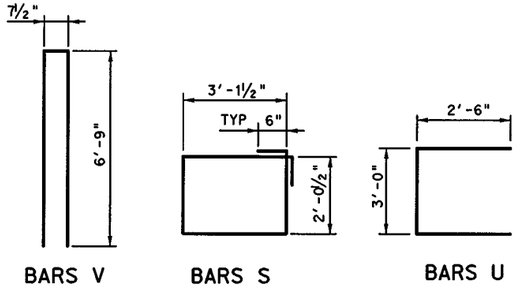

BARS V BARS S BARS U

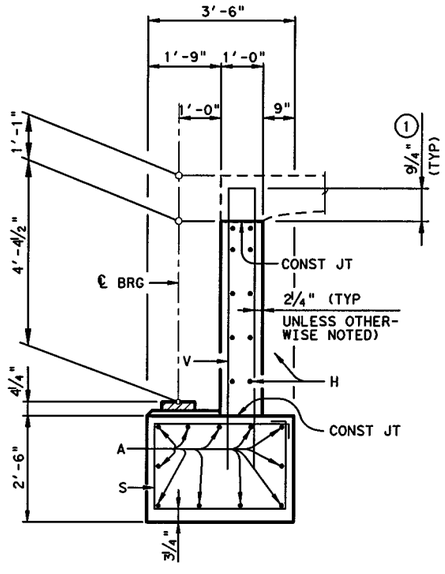

SECTION A-A

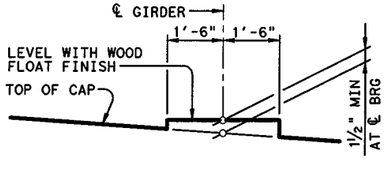

BEARING SEAT DETAIL

(BEARING SURFACE SHALL BE CLEAN AND FREE OF ALL LOOSE MATERIAL BEFORE PLACING BEARING PAD.)

THE FRONT AND BACK, BACKWALL FACES, SIDES, AND TOP, EXCEPT UNDER BEARING AREAS, SHALL BE TREATED WITH A "CLASS II, TYPE I PENETRATING CONCRETE SURFACE TREATMENT".

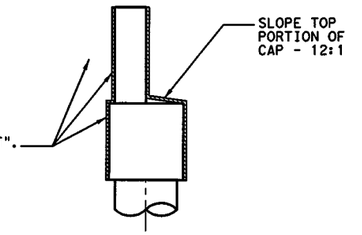

CONCRETE SURFACE TREATMENT DETAIL FOR ABUTMENT

7/2/12

STATE OF TEXAS
CORBETT L. FREEMAN
86913
LICENSED
PROFESSIONAL ENGINEER

HL 93 LOADING

I. S. ENGINEERS, LLC
TBPE REG. # F-11657

Texas Department of Transportation
© 2012

IH 35W FROM NORTH TARRANT PKWY TO IH 820

ABUTMENT NO. 11

NB IH35W EXIT RAMP FROM MANAGED LANES

SCALE: NTS — SHEET 1 OF 1

DESIGN	FED.RD. DIV.NO.	FEDERAL AID PROJECT NO.		HIGHWAY NO.
ZS	6	(SEE TITLE SHEET)		IH 35W
GRAPHICS SPL	STATE	DISTRICT	COUNTY	SHEET NO.
CHECK CLF	TEXAS	FTW	TARRANT	1611
CHECK CLF	CONTROL	SECTION	JOB	
	0014	16	255, ETC.	

DRAWING DATE: 7/28/2012 FILENAME: S3BBR*MLN-BB*AB*02.dgn

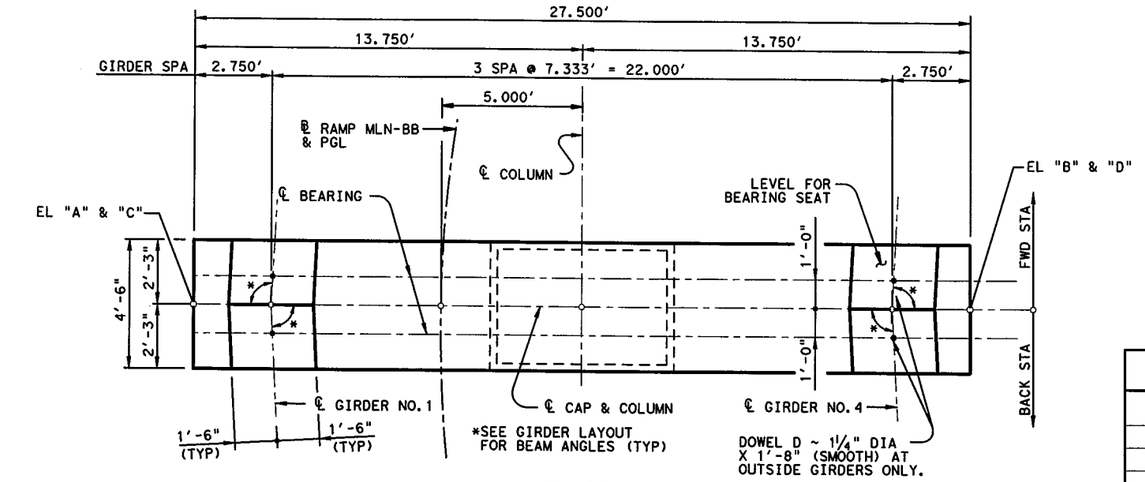

PLAN

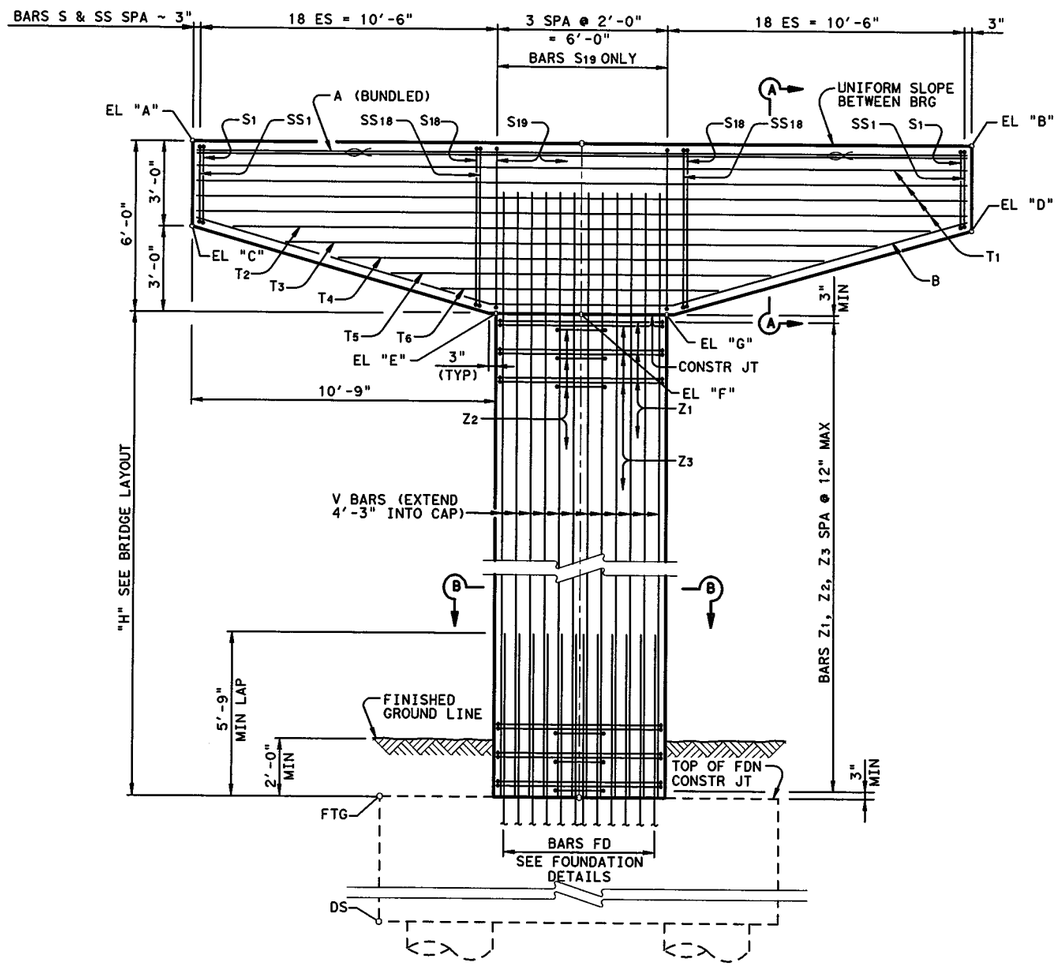

ELEVATION

GENERAL NOTES:

DESIGNED ACCORDING TO AASHTO LRFD SPECIFICATIONS, 5TH EDITION (2010).

CLASS "C" (HPC) CONCRETE STRENGTH F'C = 3,600 PSI.

ALL REINFORCING SHALL BE GRADE 60.

SEE FOUNDATION DETAILS FOR ALL FOUNDATION NOTES.

CALCULATED FOUNDATION LOAD: 362 TONS / D.S. (BENT 2)
321 TONS / D.S. (BENTS 3 & 4)

TABLE OF ELEVATIONS

BENT	"A"	"B"	"C"	"D"	"E"	"F"	"G"	FTG	TOP OF DS*	DS TIP	AS-BUILT DS TIP
2	645.601	646.151	642.601	643.151	639.816	639.876	639.936	626.876	620.876	604.876	
3	649.658	649.758	646.658	646.758	643.697	643.708	643.719	627.708	621.708	605.708	
4	653.759	652.692	650.759	649.692	647.342	647.226	647.109	623.226	617.226	605.226	

* TOP OF DRILLED SHAFT ELEVATIONS WERE ESTIMATED BASED ON GROUND ELEVATION INFORMATION AVAILABLE AT THE TIME OF DESIGN. CONTRACTOR SHALL CONFIRM THESE ELEVATIONS PRIOR TO DRILLING.

7/11/12
STATE OF TEXAS
CORBETT L. FREEMAN
86913
LICENSED PROFESSIONAL ENGINEER

HL 93 LOADING

I. S. ENGINEERS, LLC
TBPE REG. # F-11657

Texas Department of Transportation
© 2012

IH 35W FROM NORTH TARRANT PKWY TO IH 820

INTERIOR BENTS NO. 2 - 4
NB IH35W EXIT RAMP FROM MANAGED LANES

SCALE: NTS — SHEET 1 OF 2

DESIGN	FED. RD. DIV. NO.	FEDERAL AID PROJECT NO.		HIGHWAY NO.
CLF	6	(SEE TITLE SHEET)		IH 35W
GRAPHICS SPL	STATE	DISTRICT	COUNTY	SHEET NO.
CHECK SB	TEXAS	FTW	TARRANT	1612
CHECK CLF	CONTROL	SECTION	JOB	
	0014	16	255, ETC.	

FILENAME: S3BBR*MLN-BB*IB*01a.dgn
DRAWING DATE: 7/13/2012

③ TABLE OF COLUMN QUANTITIES

BENT	"H"	CL. "C" CONC. (HPC) (COL)	BARS V 34 ~ #10		BARS Z1 #4 x 19'-4"		BARS Z2 #4 x 11'-5"		BARS Z3 #4 x 6'-11"	
NO.	FT	CY	LENGTH	WT.	NO.	WT.	NO.	WT.	NO.	WT.
2	13	11.6	17'-3"	2,524	14	181	14	107	14	65
3	16	14.2	20'-3"	2,963	17	220	17	130	17	79
4	24	21.3	28'-3"	4,133	25	323	25	191	25	116

②④ TOTAL ESTIMATED QUANTITIES

REINF. STEEL	CL. "C" CONC. (HPC) (BENT)
LB	CY
8,093	33.9
8,608	36.5
9,979	43.6

TABLE OF CONSTANT QUANTITIES ②

BAR	NO.	SIZE	LENGTH	WEIGHT
A	18	#11	27'-2"	2,598
B	5	#8	28'-0"	374
D	4	1¼"Ø	1'-8"	28
E1 ⑤	16	#6	6'-8"	160
E2 ⑤	16	#6	5'-11"	142
S1-18 AVG	36	#5	17'-5"	654
S19	4	#5	20'-6"	86
SS1-18 AVG	36	#5	15'-5"	579
T1	8	#6	27'-2"	326
T2-6 AVG	10	#6	17'-11"	269
REINFORCING STEEL			LBS	5,216
CL"C" CONCRETE (HPC) (CAP)			CY	22.3

② QUANTITIES SHOWN ARE FOR ONE BENT ONLY.

③ ADJUST BARS V LENGTH BY 1 FT AND NUMBER OF BARS Z BY 1 FOR EACH LINEAR FOOT OF VARIATION IN "H" VALUE.

④ ADJUST REINFORCING STEEL TOTAL BY 173 LBS AND CLASS "C" CONCRETE TOTAL BY 0.889 CY FOR EACH LINEAR FOOT OF VARIATION IN "H" VALUE.

⑤ BENT 2 ONLY.

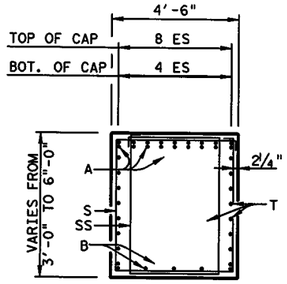

SECTION A-A

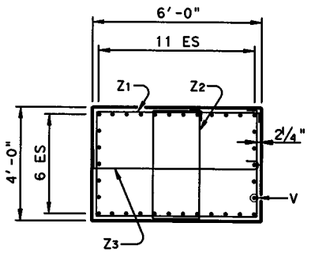

SECTION B-B

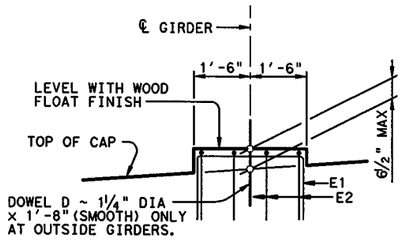

BENT 2 (FWD SPAN ONLY)

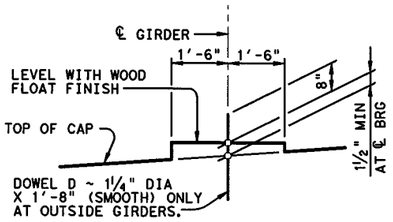

ALL OTHERS

THE TOP, SIDES, AND ENDS, EXCEPT UNDER BEARING AREAS, SHALL BE TREATED WITH A "CLASS II, TYPE I PENETRATING CONCRETE SURFACE TREATMENT"

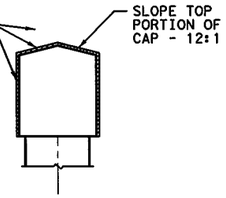

CONCRETE SURFACE TREATMENT DETAIL FOR INTERIOR BENT

BEARING SEAT DETAIL

(BEARING SURFACE SHALL BE CLEAN AND FREE OF ALL LOOSE MATERIAL BEFORE PLACING BEARING PAD.)

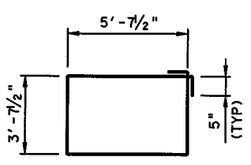

BARS Z1

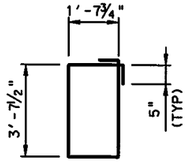

BARS Z2

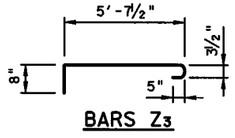

BARS Z3

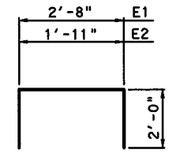

BARS E

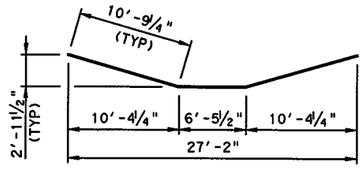

BARS B

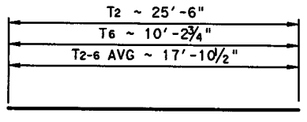

VARIABLE BARS T

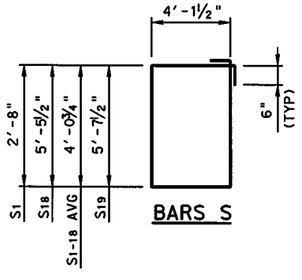

BARS S

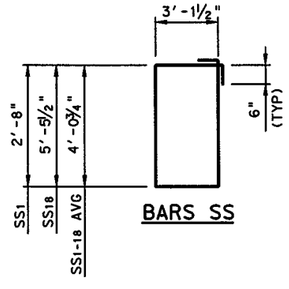

BARS SS

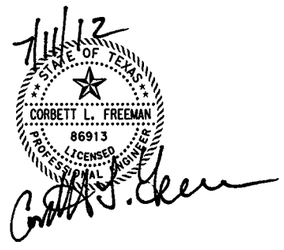

HL 93 LOADING

I. S. ENGINEERS, LLC
TBPE REG. # F-11657

Texas Department of Transportation
© 2012

IH 35W FROM NORTH TARRANT PKWY TO IH 820

INTERIOR BENTS NO. 2 - 4
NB IH35W EXIT RAMP FROM MANAGED LANES

SCALE: NTS — SHEET 2 OF 2

DESIGN	FED. RD. DIV. NO.	FEDERAL AID PROJECT NO.		HIGHWAY NO.
CLF	6	(SEE TITLE SHEET)		IH 35W
GRAPHICS SPL	STATE	DISTRICT	COUNTY	SHEET NO.
CHECK SB	TEXAS	FTW	TARRANT	1613
CHECK CLF	CONTROL	SECTION	JOB	
	0014	16	255, ETC.	

FILENAME: S3BBR*MLN-BB*IB*01b.dgn
DRAWING DATE: 7/13/2012

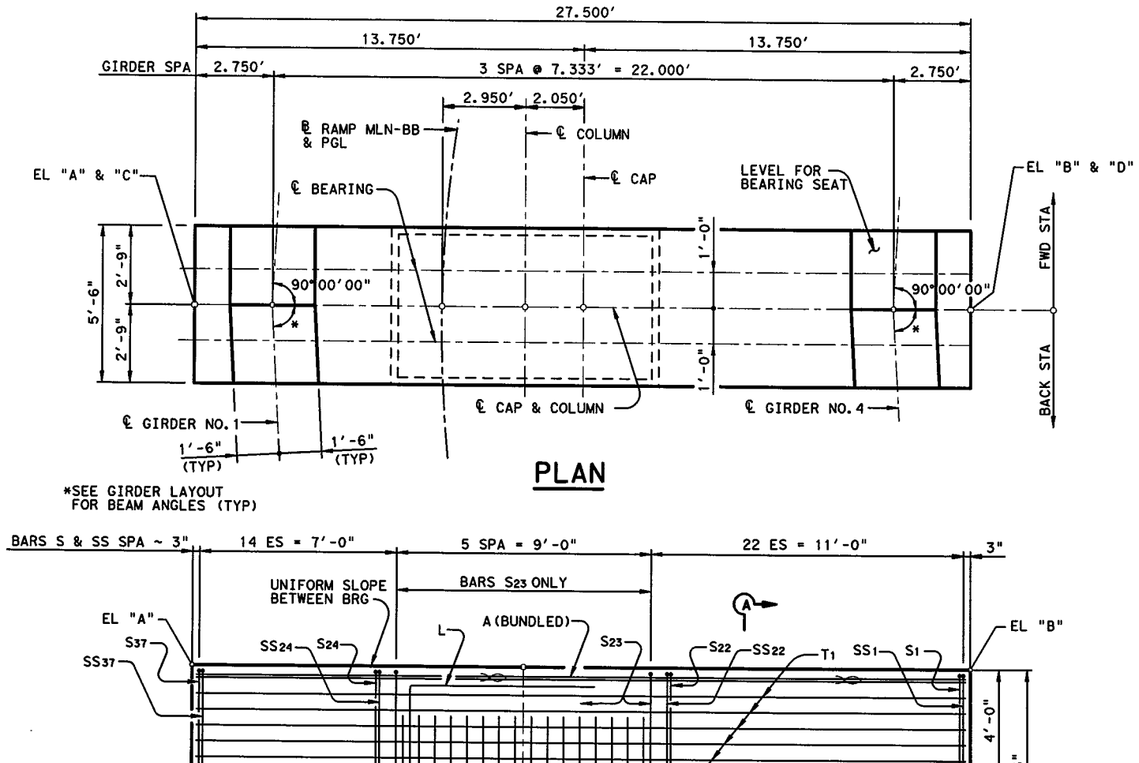

PLAN

*SEE GIRDER LAYOUT FOR BEAM ANGLES (TYP)

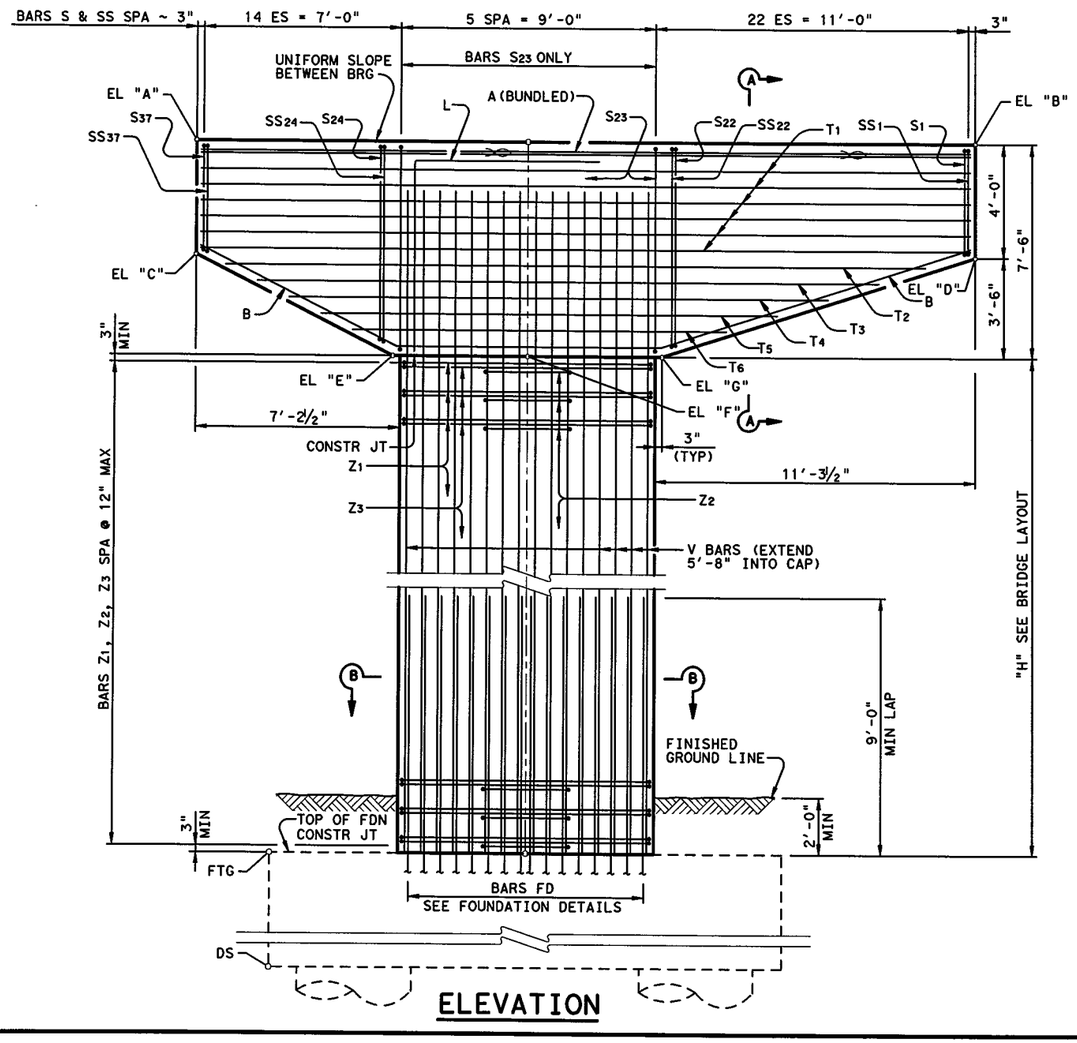

ELEVATION

GENERAL NOTES:

DESIGNED ACCORDING TO AASHTO LRFD SPECIFICATIONS, 5TH EDITION (2010).

CLASS "C" (HPC) CONCRETE STRENGTH F'C = 3,600 PSI.

ALL REINFORCING SHALL BE GRADE 60.

SEE FOUNDATION DETAILS FOR ALL FOUNDATION NOTES.

CALCULATED FOUNDATION LOAD: 560 TONS / D.S.

TABLE OF ELEVATIONS

"A"	"B"	"C"	"D"	"E"	"F"	"G"	FTG	TOP OF DS*	DS TIP	AS-BUILT DS TIP
655.846	654.691	651.846	650.691	648.043	647.854	647.665	617.854	611.854	596.854	

* TOP OF DRILLED SHAFT ELEVATIONS WERE ESTIMATED BASED ON GROUND ELEVATION INFORMATION AVAILABLE AT THE TIME OF DESIGN. CONTRACTOR SHALL CONFIRM THESE ELEVATIONS PRIOR TO DRILLING.

7/11/12

STATE OF TEXAS
CORBETT L. FREEMAN
86913
LICENSED PROFESSIONAL ENGINEER

HL 93 LOADING

I. S. ENGINEERS, LLC
TBPE REG. # F-11657

Texas Department of Transportation
© 2012

IH 35W FROM NORTH TARRANT PKWY TO IH 820

INTERIOR BENT NO. 5
NB IH35W EXIT RAMP FROM MANAGED LANES

SCALE: NTS — SHEET 1 OF 2

DESIGN	FED.RD. DIV.NO.	FEDERAL AID PROJECT NO.		HIGHWAY NO.
CLF	6	(SEE TITLE SHEET)		IH 35W
GRAPHICS AXD	STATE	DISTRICT	COUNTY	SHEET NO.
CHECK SB	TEXAS	FTW	TARRANT	1614
CHECK CLF	CONTROL	SECTION	JOB	
	0014	16	255, ETC.	

DRAWING DATE: 7/13/2012 FILENAME: S38BR*MLN-BB*1B*02a.dgn

③ TABLE OF COLUMN QUANTITIES

BENT	"H"	CL. "C" CONC. (MASS) (HPC) (COL)	BARS V 52 ~ #10		BARS Z1 #4 x 27'-4"		BARS Z2 #4 x 15'-4"		BARS Z3 #4 x 9'-11"	
NO.	FT	CY	LENGTH	WT.	NO.	WT.	NO.	WT.	NO.	WT.
5	30	50.0	35'-8"	7,981	31	566	31	318	31	205

②④ TOTAL ESTIMATED QUANTITIES

REINF. STEEL	CL. "C" CONC (MASS) (HPC) (COL)	CL. "C" CONC (MASS) (HPC) (CAP)
LB	CY	CY
16,776	50.0	36.2

TABLE OF CONSTANT QUANTITIES ②

BAR	NO.	SIZE	LENGTH	WEIGHT
A	20	#11	27'-2"	2,887
B	6	#8	28'-7"	458
E1	16	#6	6'-8"	160
E2	16	#6	6'-5"	154
L	10	#11	13'-0"	691
S1-22 AVG	22	#6	22'-11"	757
S23	6	#6	26'-6"	239
S24-37 AVG	14	#6	22'-3"	468
SS1-22 AVG	22	#6	20'-11"	691
SS24-37 AVG	14	#6	20'-3"	426
T1	12	#6	27'-2"	490
T2-6 AVG	10	#6	18'-11"	285
REINFORCING STEEL			LBS	7,706
CL "C" CONC (MASS) (HPC) (CAP)			CY	36.2

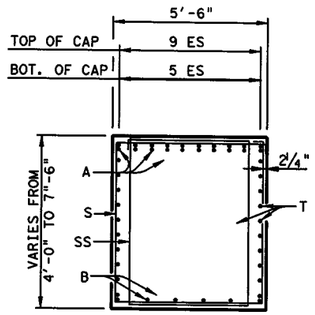

SECTION A-A

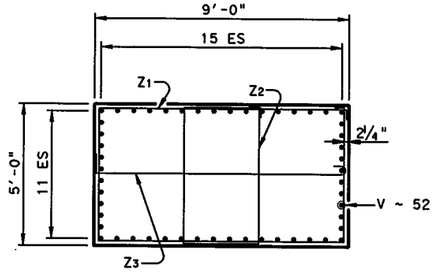

SECTION B-B

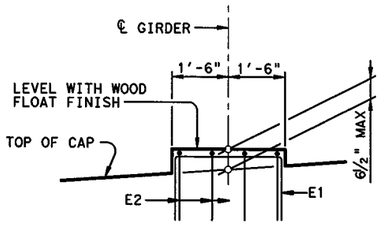

BACK SPAN

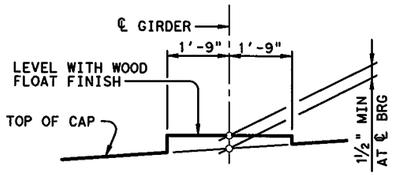

FWD SPAN

THE TOP, SIDES, AND ENDS, EXCEPT UNDER BEARING AREAS, SHALL BE TREATED WITH A "CLASS II, TYPE I PENETRATING CONCRETE SURFACE TREATMENT"

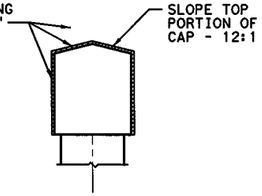

CONCRETE SURFACE TREATMENT DETAIL FOR INTERIOR BENT

② QUANTITIES SHOWN ARE FOR ONE BENT ONLY.

③ ADJUST BARS V LENGTH BY 1 FT AND NUMBER OF BARS Z BY 1 FOR EACH LINEAR FOOT OF VARIATION IN "H" VALUE.

④ ADJUST REINFORCING STEEL TOTAL BY 260 LBS AND CLASS "C" CONCRETE TOTAL BY 1.667 CY FOR EACH LINEAR FOOT OF VARIATION IN "H" VALUE.

BEARING SEAT DETAIL

(BEARING SURFACE SHALL BE CLEAN AND FREE OF ALL LOOSE MATERIAL BEFORE PLACING BEARING PAD.)

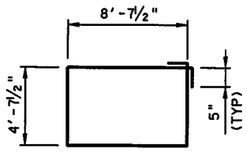

BARS Z1

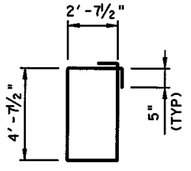

BARS Z2

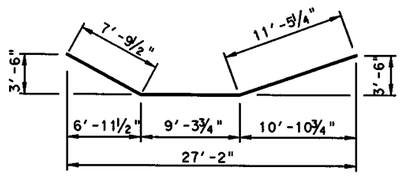

BARS B

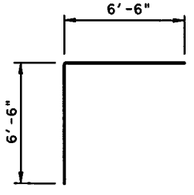

BARS L

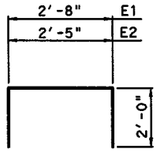

BARS E

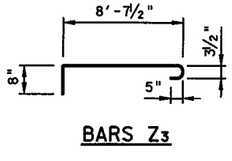

BARS Z3

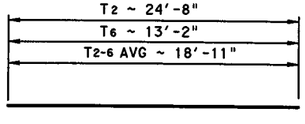

VARIABLE BARS T

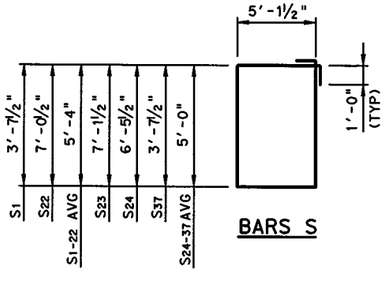

BARS S

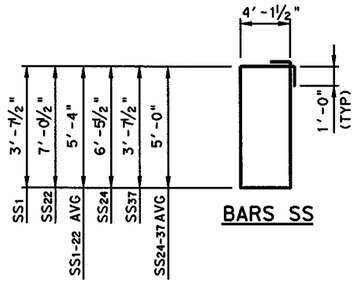

BARS SS

HL 93 LOADING

7/11/12

STATE OF TEXAS
CORBETT L. FREEMAN
86913
LICENSED PROFESSIONAL ENGINEER

I. S. ENGINEERS, LLC
TBPE REG. # F-11657

Texas Department of Transportation

© 2012

IH 35W FROM NORTH TARRANT PKWY TO IH 820

INTERIOR BENT NO. 5
NB IH35W EXIT RAMP
FROM MANAGED LANES

SCALE: NTS — SHEET 2 OF 2

DESIGN	FED.RD. DIV.NO.	FEDERAL AID PROJECT NO.		HIGHWAY NO.
CLF	6	(SEE TITLE SHEET)		IH 35W
GRAPHICS AXD	STATE	DISTRICT	COUNTY	SHEET NO.
CHECK SB	TEXAS	FTW	TARRANT	1615
CHECK CLF	CONTROL	SECTION	JOB	
	0014	16	255, ETC.	

DRAWING DATE: 7/13/2012 FILENAME: S3BBR*MLN-BB*IB*02b.dgn

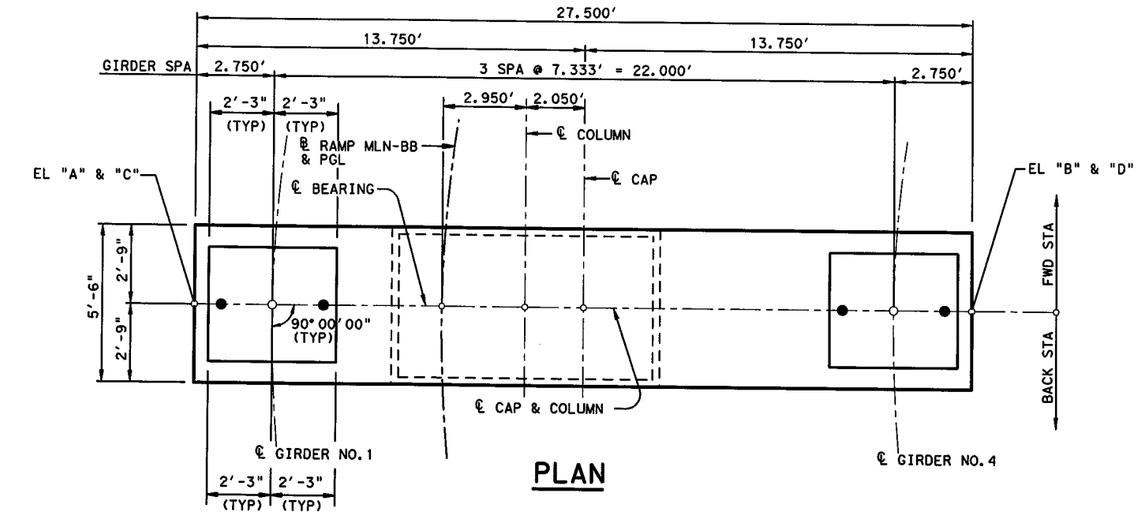

PLAN

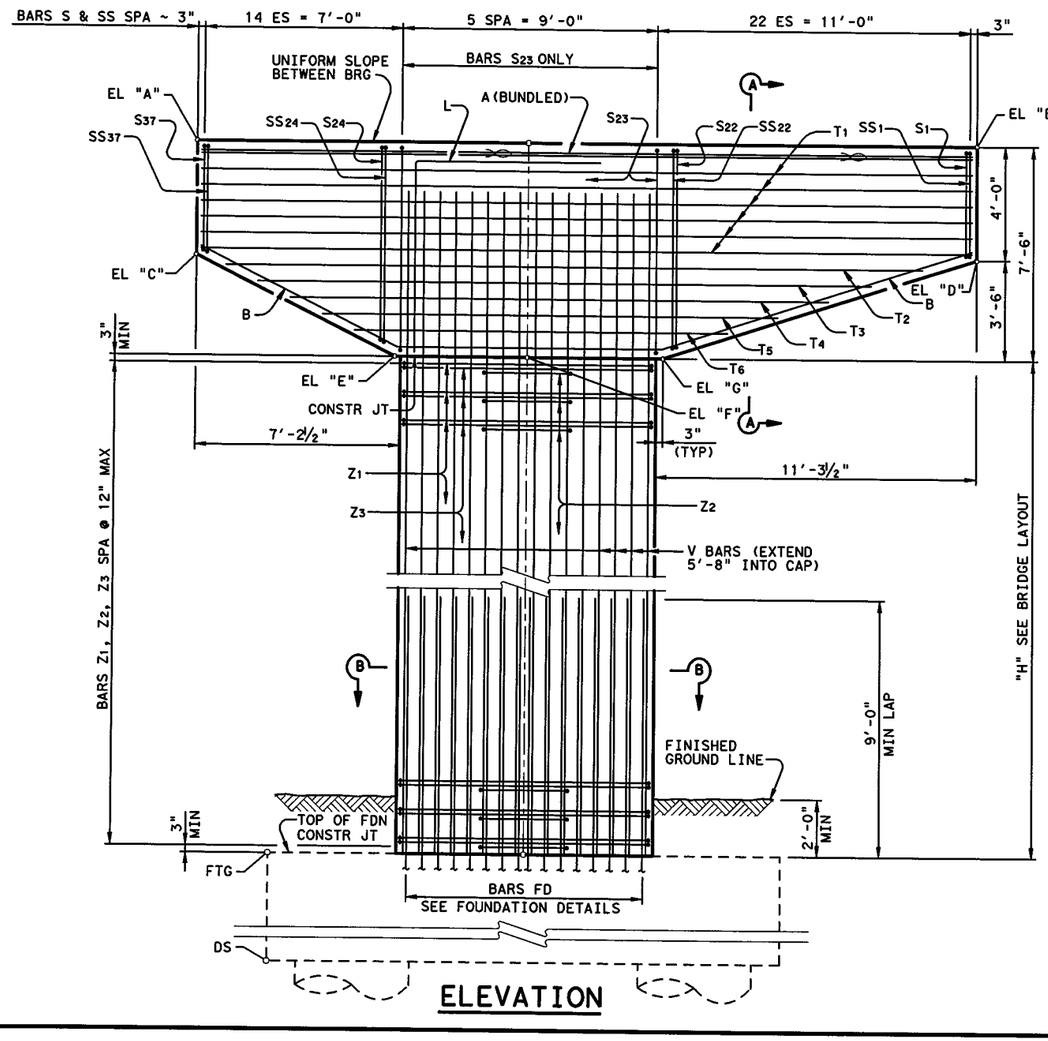

ELEVATION

GENERAL NOTES:

DESIGNED ACCORDING TO AASHTO LRFD SPECIFICATIONS, 5TH EDITION (2010).

CLASS "C" (HPC) CONCRETE STRENGTH F'C = 3,600 PSI.

ALL REINFORCING SHALL BE GRADE 60.

SEE FOUNDATION DETAILS FOR ALL FOUNDATION NOTES.

CALCULATED FOUNDATION LOAD: 560 TONS / D.S.

TABLE OF ELEVATIONS

"A"	"B"	"C"	"D"	"E"	"F"	"G"	FTG	TOP OF DS*	DS TIP	AS-BUILT DS TIP
654.623	653.494	650.623	649.494	646.827	646.643	646.458	611.643	605.643	590.643	

* TOP OF DRILLED SHAFT ELEVATIONS WERE ESTIMATED BASED ON GROUND ELEVATION INFORMATION AVAILABLE AT THE TIME OF DESIGN. CONTRACTOR SHALL CONFIRM THESE ELEVATIONS PRIOR TO DRILLING.

7/11/12

STATE OF TEXAS
CORBETT L. FREEMAN
86913
LICENSED PROFESSIONAL ENGINEER

HL 93 LOADING

I. S. ENGINEERS, LLC
TBPE REG. # F-11657

Texas Department of Transportation
© 2012

IH 35W FROM NORTH TARRANT PKWY TO IH 820

INTERIOR BENT NO. 6
NB IH35W EXIT RAMP FROM MANAGED LANES

SCALE: NTS — SHEET 1 OF 2

DESIGN	FED.RD. DIV.NO.	FEDERAL AID PROJECT NO.		HIGHWAY NO.
CLF	6	(SEE TITLE SHEET)		IH 35W
GRAPHICS	STATE	DISTRICT	COUNTY	SHEET NO.
AXD	TEXAS	FTW	TARRANT	
CHECK	CONTROL	SECTION	JOB	1616
SB	0014	16	255, ETC.	
CHECK				
CLF				

DRAWING DATE: 7/13/2012 FILENAME: S3BBR*MLN-BB*IB*03a.dgn

③ TABLE OF COLUMN QUANTITIES

BENT	"H"	CL. "C" CONC. (MASS) (HPC) (COL)	BARS V 52 ~ #10		BARS Z1 #4 x 27'-4"		BARS Z2 #4 x 15'-4"		BARS Z3 #4 x 9'-11"	
NO.	FT	CY	LENGTH	WT.	NO.	WT.	NO.	WT.	NO.	WT.
6	35	58.3	40'-8"	9,099	36	657	36	369	36	238

②④ TOTAL ESTIMATED QUANTITIES

REINF. STEEL	CL. "C" CONC (MASS) (HPC) (COL)	CL. "C" CONC (MASS) (HPC) (CAP)
LB	CY	CY
19,427	58.3	35.6

TABLE OF CONSTANT QUANTITIES ②

BAR	NO.	SIZE	LENGTH	WEIGHT
A	28	#11	27'-2"	4,041
B	6	#8	28'-7"	458
E1	16	#6	8'-2"	196
E2	16	#6	7'-8"	184
L	12	#11	13'-0"	829
S1-22 AVG	22	#6	22'-11"	757
S23	6	#6	26'-6"	239
S24-37 AVG	14	#6	22'-3"	468
SS1-22 AVG	22	#6	20'-11"	691
SS24-37 AVG	14	#6	20'-3"	426
T1	12	#6	27'-2"	490
T2-6 AVG	10	#6	18'-11"	285
REINFORCING STEEL			LBS	9,064
CL "C" CONC (MASS) (HPC) (CAP)			CY	35.6

② QUANTITIES SHOWN ARE FOR ONE BENT ONLY.

③ ADJUST BARS V LENGTH BY 1 FT AND NUMBER OF BARS Z BY 1 FOR EACH LINEAR FOOT OF VARIATION IN "H" VALUE.

④ ADJUST REINFORCING STEEL TOTAL BY 260 LBS AND CLASS "C" CONCRETE TOTAL BY 1.667 CY FOR EACH LINEAR FOOT OF VARIATION IN "H" VALUE.

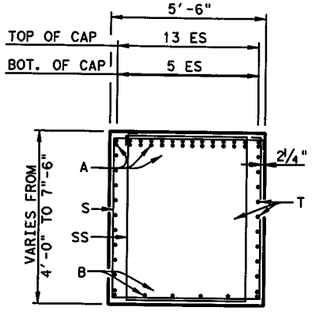

SECTION A-A

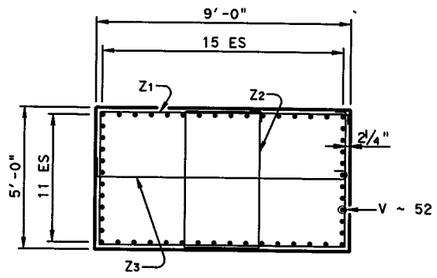

SECTION B-B

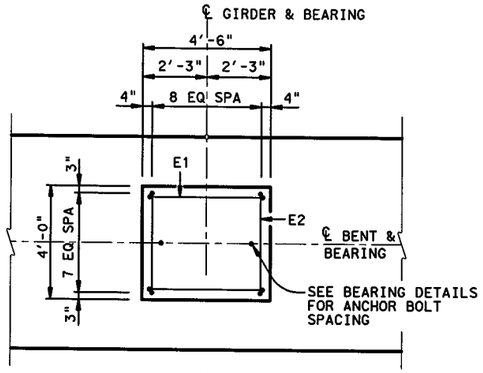

PLAN

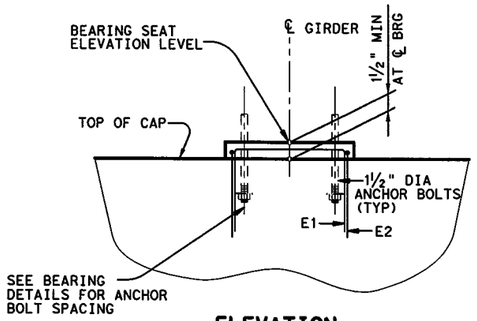

ELEVATION

BEARING SEAT ELEVATION

(BEARING SURFACE MUST BE CLEAN AND FREE OF ALL LOOSE MATERIAL BEFORE PLACING BEARING.)

THE TOP, SIDES, AND ENDS, EXCEPT UNDER BEARING AREAS, SHALL BE TREATED WITH A "CLASS II, TYPE I PENETRATING CONCRETE SURFACE TREATMENT"

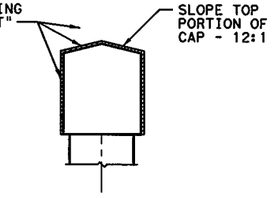

CONCRETE SURFACE TREATMENT DETAIL FOR INTERIOR BENT

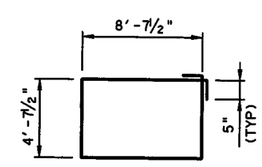

BARS Z1

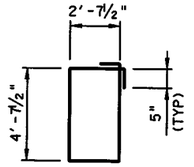

BARS Z2

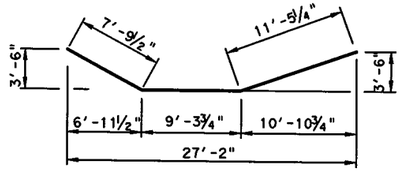

BARS B

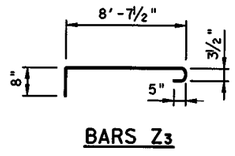

BARS Z3

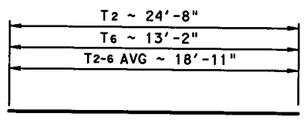

VARIABLE BARS T

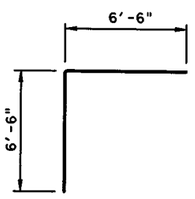

BARS L

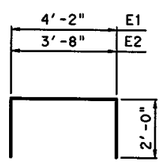

BARS E

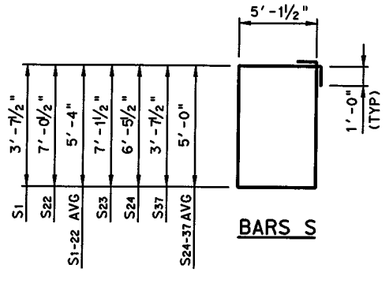

BARS S

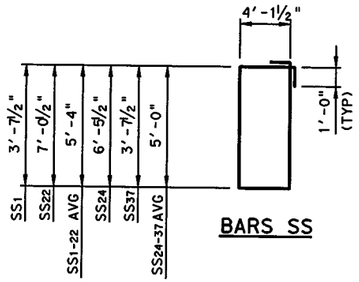

BARS SS

7/11/12
STATE OF TEXAS
CORBETT L. FREEMAN
86913
LICENSED PROFESSIONAL ENGINEER

HL 93 LOADING

I. S. ENGINEERS, LLC
TBPE REG. # F-11657

Texas Department of Transportation
© 2012

IH 35W FROM NORTH TARRANT PKWY TO IH 820

INTERIOR BENT NO. 6

NB IH35W EXIT RAMP FROM MANAGED LANES

SCALE: NTS — SHEET 2 OF 2

DESIGN	FED.RD. DIV.NO.	FEDERAL AID PROJECT NO.		HIGHWAY NO.
CLF	6	(SEE TITLE SHEET)		IH 35W
GRAPHICS AXD	STATE	DISTRICT	COUNTY	SHEET NO.
CHECK SB	TEXAS	FTW	TARRANT	1617
CHECK CLF	CONTROL	SECTION	JOB	
	0014	16	255, ETC.	

DRAWING DATE: 7/13/2012 FILENAME: S3BBR*MLN-BB*IB*03b.dgn

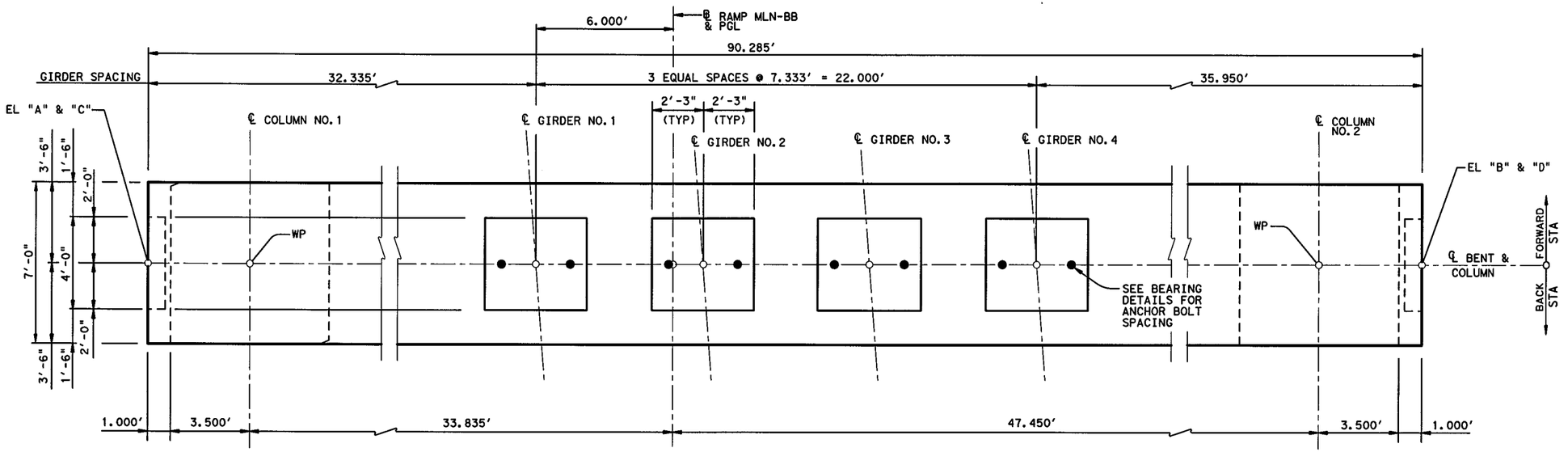

PLAN

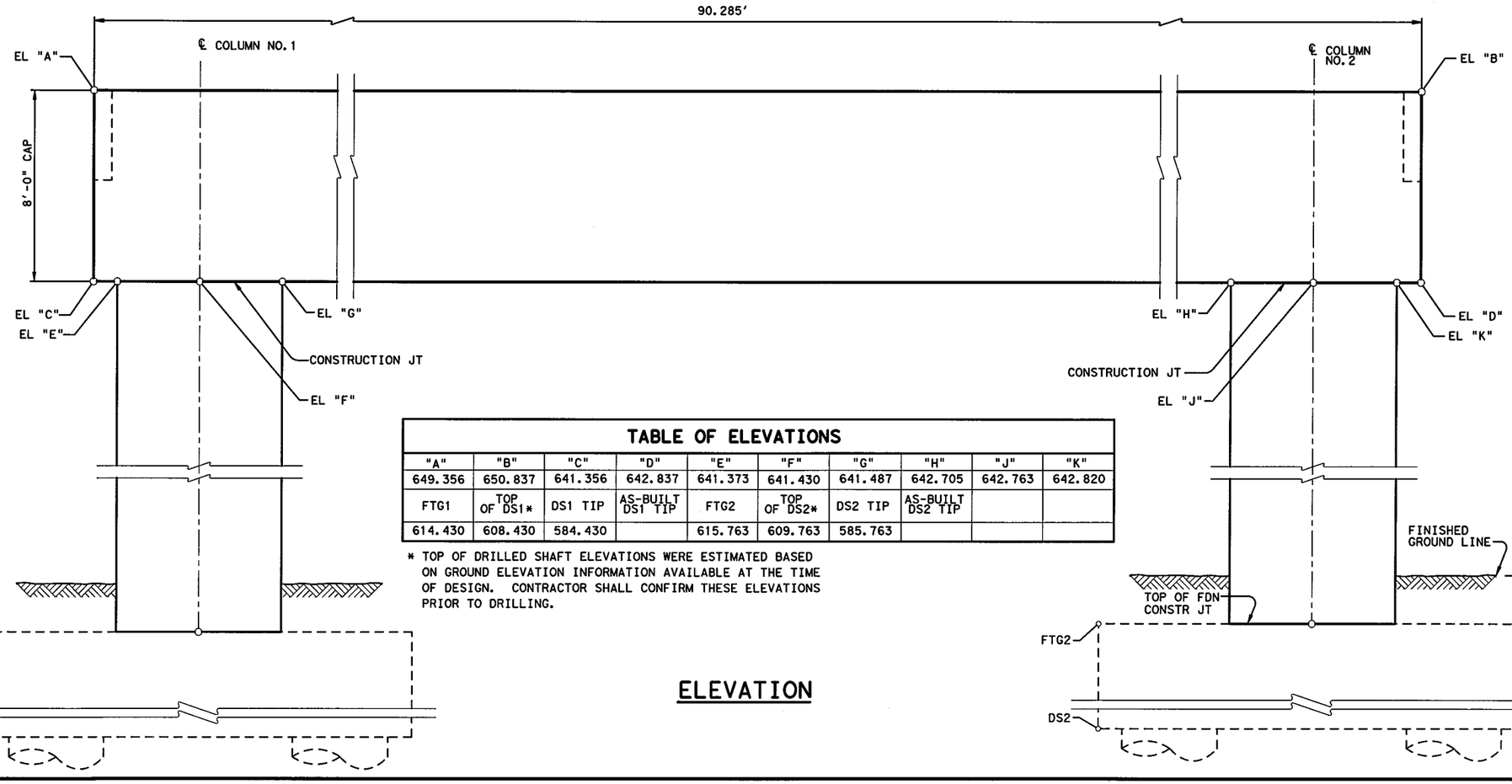

ELEVATION

TABLE OF ELEVATIONS

"A"	"B"	"C"	"D"	"E"	"F"	"G"	"H"	"J"	"K"
649.356	650.837	641.356	642.837	641.373	641.430	641.487	642.705	642.763	642.820
FTG1	TOP OF DS1*	DS1 TIP	AS-BUILT DS1 TIP	FTG2	TOP OF DS2*	DS2 TIP	AS-BUILT DS2 TIP		
614.430	608.430	584.430		615.763	609.763	585.763			

* TOP OF DRILLED SHAFT ELEVATIONS WERE ESTIMATED BASED ON GROUND ELEVATION INFORMATION AVAILABLE AT THE TIME OF DESIGN. CONTRACTOR SHALL CONFIRM THESE ELEVATIONS PRIOR TO DRILLING.

7/26/12
STATE OF TEXAS
CORBETT L. FREEMAN
86913
LICENSED PROFESSIONAL ENGINEER

HL 93 LOADING

I. S. ENGINEERS, LLC
TBPE REG. # F-11657

Texas Department of Transportation
© 2012

IH 35W FROM NORTH TARRANT PKWY TO IH 820

INTERIOR BENT NO. 7

NB IH35W EXIT RAMP FROM MANAGED LANES

SCALE: NTS — SHEET 1 OF 5

DESIGN	FED. RD. DIV. NO.	FEDERAL AID PROJECT NO.		HIGHWAY NO.
CLF	6	(SEE TITLE SHEET)		IH 35W
GRAPHICS AXD	STATE	DISTRICT	COUNTY	SHEET NO.
CHECK SB	TEXAS	FTW	TARRANT	
CHECK CLF	CONTROL	SECTION	JOB	1618
	0014	16	255, ETC.	

FILENAME: S3BBR*MLN-BB*IB*04.dgn
DRAWING DATE: 7/28/2012

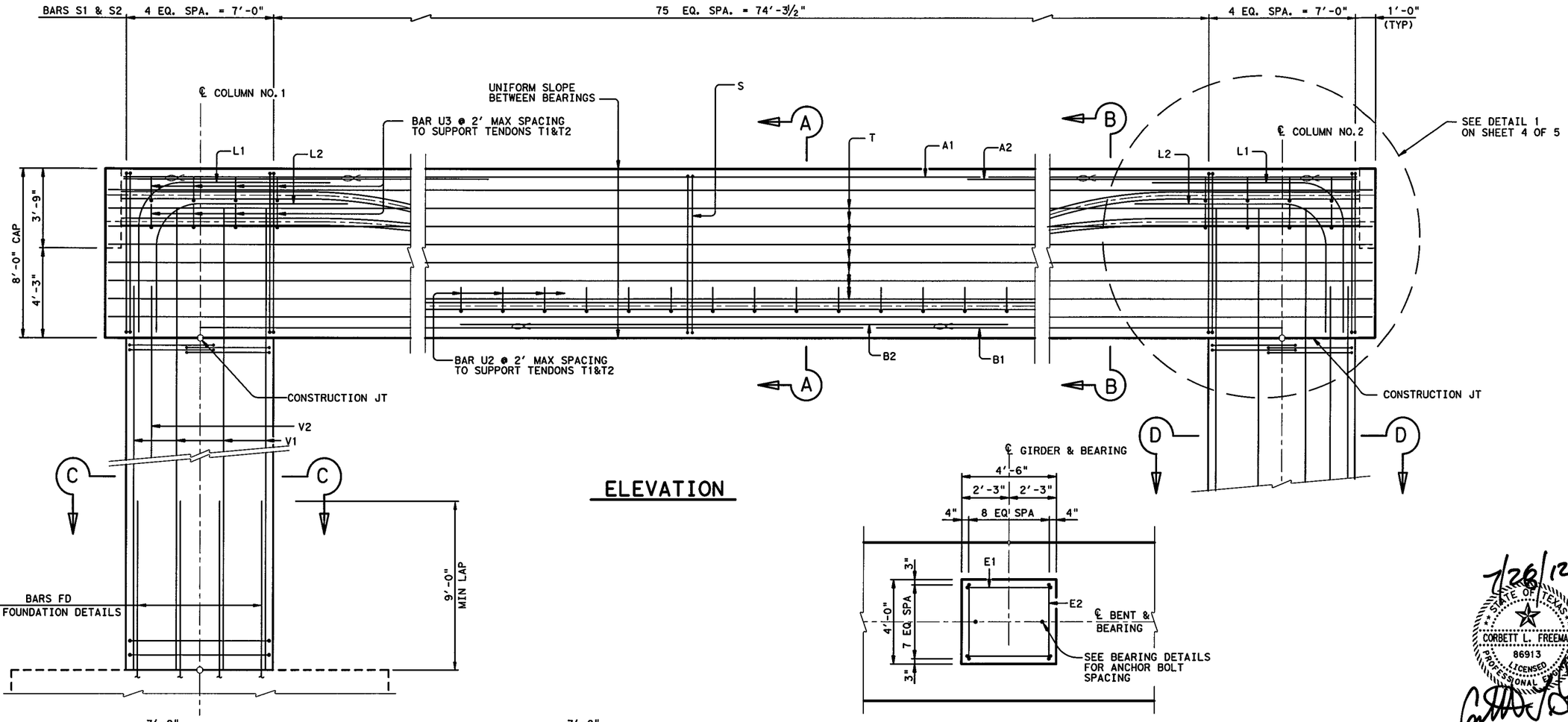

ELEVATION

PLAN

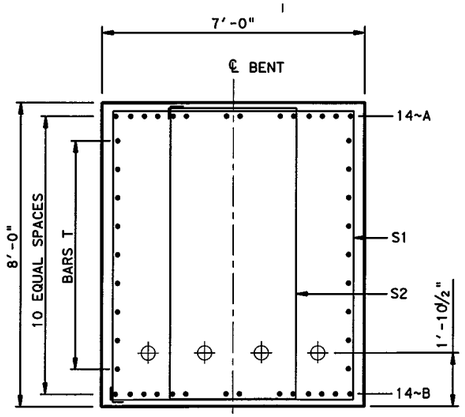

SECTION A-A

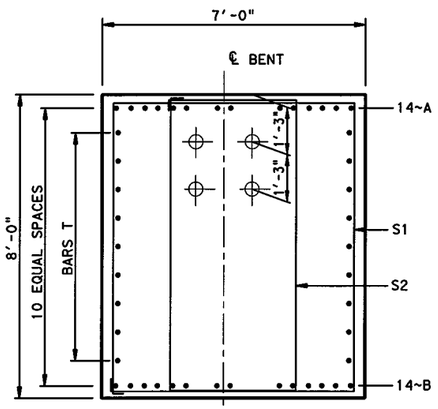

SECTION B-B

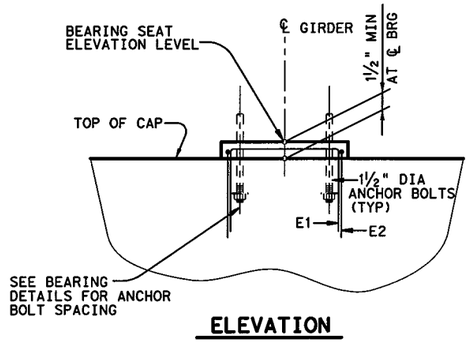

ELEVATION

BEARING SEAT ELEVATION

(BEARING SURFACE MUST BE CLEAN AND FREE OF ALL LOOSE MATERIAL BEFORE PLACING BEARING.)

7/26/12

STATE OF TEXAS
CORBETT L. FREEMAN
86913
LICENSED
PROFESSIONAL ENGINEER

HL 93 LOADING

I. S. ENGINEERS, LLC
TBPE REG. # F-11657

Texas Department of Transportation
© 2012

IH 35W FROM NORTH TARRANT PKWY TO IH 820

INTERIOR BENT NO. 7
NB IH35W EXIT RAMP
FROM MANAGED LANES

SCALE: NTS — SHEET 2 OF 5

DESIGN	FED.RD. DIV. NO.	FEDERAL AID PROJECT NO.		HIGHWAY NO.
CLF	6	(SEE TITLE SHEET)		IH 35W
GRAPHICS AXD	STATE	DISTRICT	COUNTY	SHEET NO.
CHECK SB	TEXAS	FTW	TARRANT	
CHECK CLF	CONTROL	SECTION	JOB	1619
	0014	16	255, ETC.	

DRAWING DATE: 7/28/2012 FILENAME: S3BBR*MLN-BB*IB*05.dgn

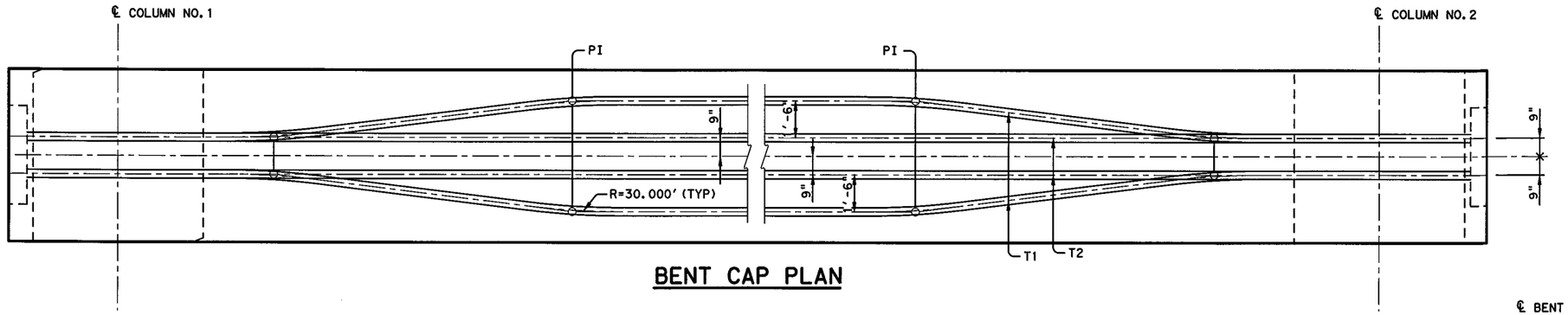

BENT CAP PLAN

CONSTRUCTION/STRESSING:

1. AFTER CAP HAS REACHED 5000 PSI, STRESS TENDONS FROM LEFT END TO MAX JACKING STRESS.

2. AFTER STRESSING, GROUT TENDONS IN ACCORDANCE WITH GROUT AND P.T. SUPPLIER'S RECOMMENDATIONS.

3. GIRDERS MAY BE ERECTED AFTER GROUT IN DUCTS HAS REACHED A COMPRESSIVE STRENGTH EQUAL TO DESIGN STRENGTH. HOWEVER, GROUT CURING TIME MAY BE NO LESS THAN 3 DAYS.

4. AFTER CAP HAS REACHED 7500 PSI, PLACE FORMS FOR BRIDGE DECK.

POST-TENSIONING NOTES:

FURNISH AND INSTALL ALL POST-TENSIONING HARDWARE, COMPONENTS, STRANDS AND GROUT IN ACCORDANCE WITH ITEM 426, "PRESTRESSING".

SUPPLY PLASTIC POST-TENSIONING DUCTS. SECURELY SUPPORT AT 2'-0" MAXIMUM INTERVALS TO INSURE THAT PROPER ALIGNMENT IS MAINTAINED DURING CONCRETE PLACEMENT.

ADJUST REINFORCING INTERFERING WITH THE POST-TENSIONING TENDON ALIGNMENT AS DIRECTED BY THE ENGINEER. REPLACE ANY CUT REINFORCING STEEL AS CLOSE AS POSSIBLE TO ITS PLAN LOCATION.

TENDONS ARE 24 x 0.6"DIA STRAND TENDONS (LO-RELAXTION STRANDS). PROVIDE THE POST-TENSIONING FORCE SPECIFIED ON THE PLANS AT THE INDICATED CRITICAL SECTION. THE FORCE SPECIFIED IS AFTER ALL LOSSES HAVE BEEN ACCOUNTED FOR.

FRICTION LOSS IS BASED ON U = 0.23. K = 0.0002 AND ANCHOR SET = 3/8". LOSSES OTHER THAN ANCHORING = 16.45 KSI.

ASSUMED ECCENTRICITY BETWEEN ℄ DUCT AND CG TENDON = 0.50"

CALCULATED PRESTRESSING (GROUTED) ~ BASED ON FINAL TOTAL POST-TENSIONING FORCE REQUIRED AFTER ALL LOSSES. (REQUIRED FINAL FORCE IN TENDONS x AVERAGE LENGTH ~ (3188K x 89.29')/1000 = 285 MKF).

SUBMIT DESIGN CALCULATIONS AND POST-TENSIONING DETAILS IN ACCORDANCE WITH ITEM 426.4.

THE CONTRACTOR AND P.T. SUPPLIER ARE RESPONSIBLE FOR PROVIDING SUPPLEMENTARY REINFORCING (SPIRALS) TO RESIST STRESSES IN THE AREA IMMEDIATELY SURROUNDING THE P.T. ANCHORS.

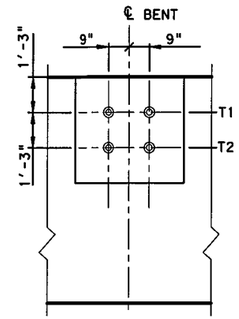

SECTION G-G

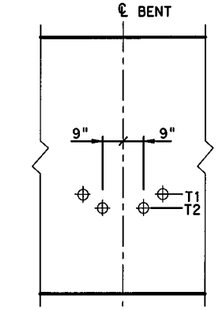

SECTION H-H

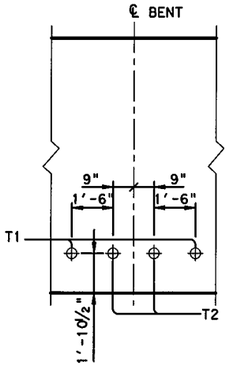

SECTION I-I

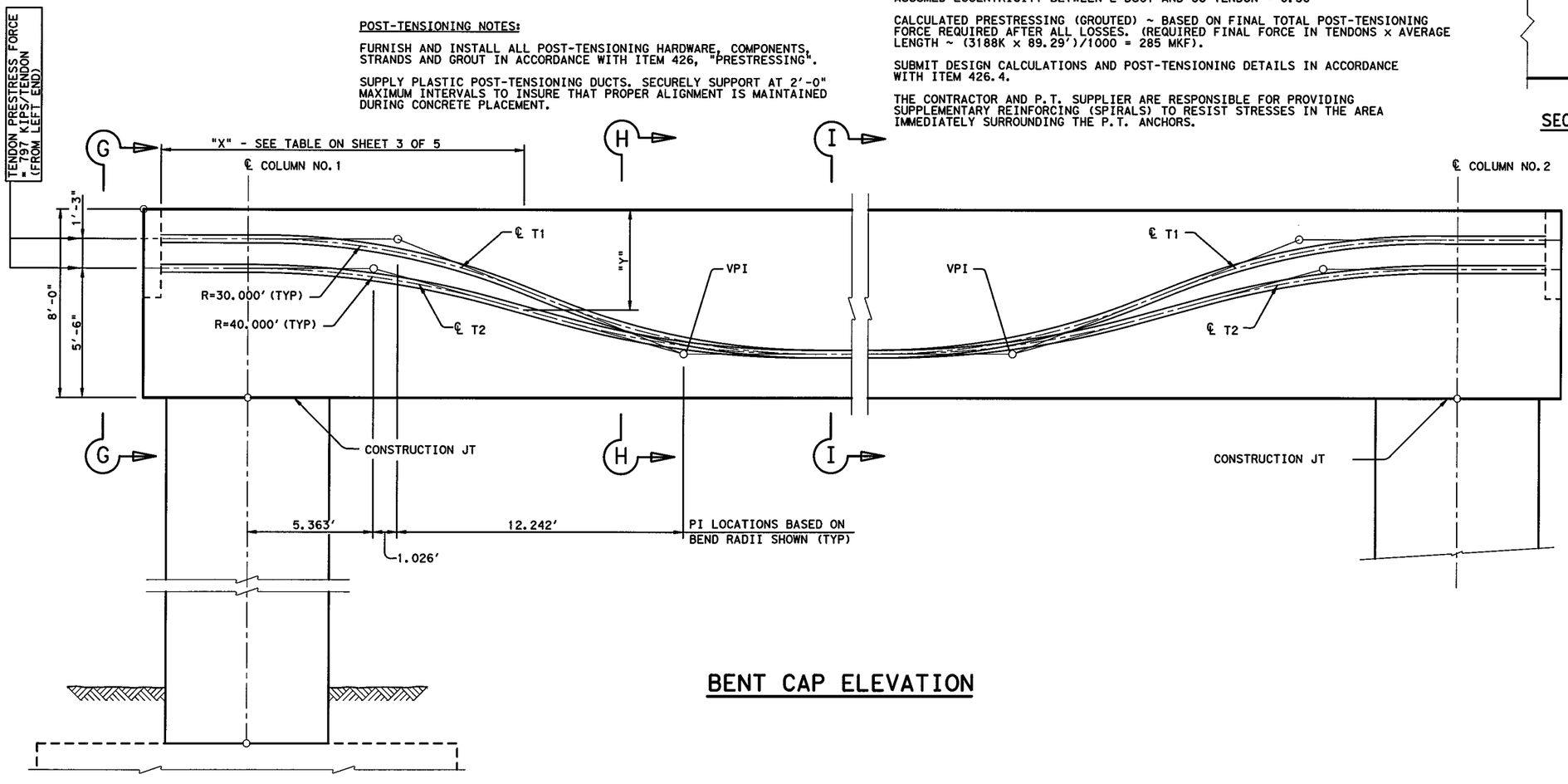

BENT CAP ELEVATION

1/28/12

STATE OF TEXAS
CORBETT L. FREEMAN
86913
LICENSED PROFESSIONAL ENGINEER

HL 93 LOADING

I. S. ENGINEERS, LLC
TBPE REG. # F-11657

Texas Department of Transportation
© 2012

IH 35W FROM NORTH TARRANT PKWY TO IH 820

INTERIOR BENT NO. 7
NB IH35W EXIT RAMP
FROM MANAGED LANES

SCALE: NTS — SHEET 3 OF 5

DESIGN	FED. RD. DIV. NO.	FEDERAL AID PROJECT NO.		HIGHWAY NO.
CLF	6	(SEE TITLE SHEET)		IH 35W
GRAPHICS AXD	STATE	DISTRICT	COUNTY	SHEET NO.
CHECK SB	TEXAS	FTW	TARRANT	1620
CHECK CLF	CONTROL	SECTION	JOB	
	0014	16	255, ETC.	

FILENAME: S3BBR*MLN-BB*IB*06.dgn
DRAWING DATE: 7/28/2012

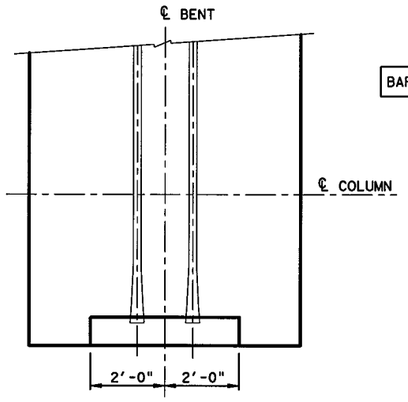

TOP VIEW

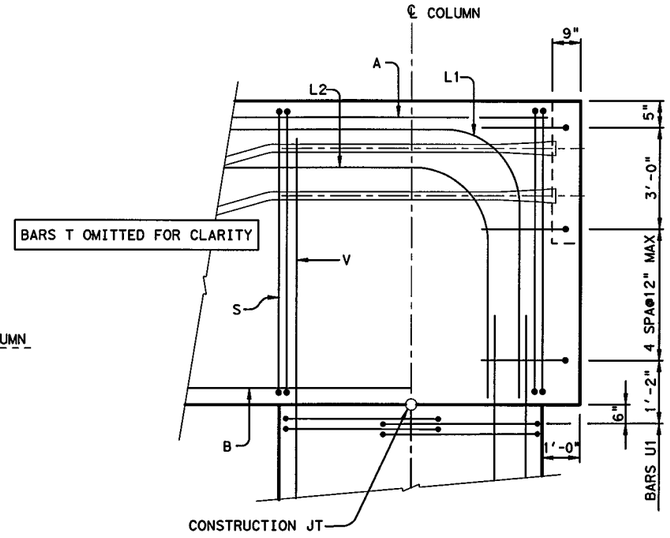

DETAIL 1

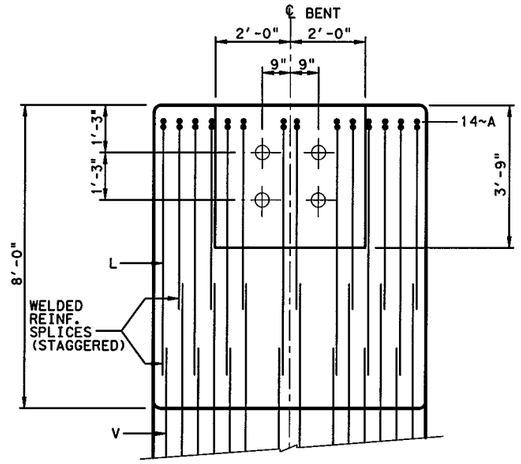

END VIEW

SECTION THRU P/T DUCTS

TABLE OF TENDON PROFILES			
"X" (FT)	"Y" (FT) T1	"Y" (FT) T2	"Z" (FT)
0.000	1.250	2.500	0.750
3.750	1.250	2.500	0.750
7.250	1.387	2.653	0.750
9.250	1.647	2.880	0.765
11.250	2.046	3.209	0.886
13.250	2.590	3.629	1.132
15.250	3.285	4.176	1.377
17.250	4.082	4.724	1.623
19.250	4.779	5.213	1.868
21.250	5.325	5.595	2.104
23.250	5.725	5.872	2.235
25.250	5.986	6.047	2.250
27.250	6.112	6.122	2.250
29.250	6.125	6.125	2.250
59.535	6.125	6.125	2.250
61.535	6.112	6.122	2.250
63.535	5.986	6.047	2.250
65.535	5.725	5.872	2.235
67.535	5.325	5.595	2.104
69.535	4.779	5.213	1.868
71.535	4.082	4.724	1.623
73.535	3.285	4.176	1.377
75.535	2.590	3.629	1.132
77.535	2.046	3.209	0.886
79.535	1.647	2.880	0.765
81.535	1.387	2.653	0.750
85.035	1.250	2.500	0.750
88.785	1.250	2.500	0.750

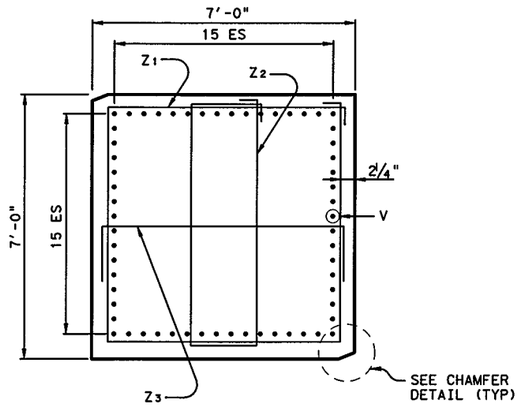

SECTION C-C

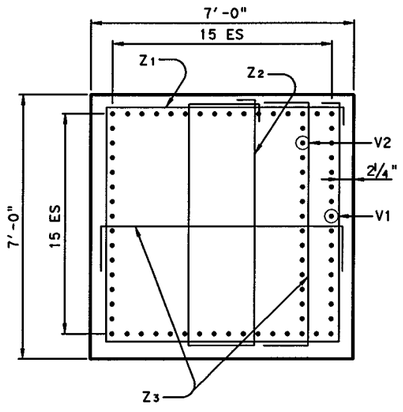

SECTION D-D

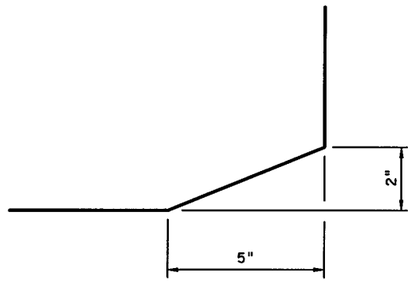

CHAMFER DETAIL

N.T.S.

NOTE: CHAMFER LEFT COLUMN AS SHOWN ADJACENT TO PROPOSED SINGLE SLOPE TRAFFIC RAIL.

7/28/12

STATE OF TEXAS
CORBETT L. FREEMAN
86913
LICENSED
PROFESSIONAL ENGINEER

HL 93 LOADING

I. S. ENGINEERS, LLC
TBPE REG. # F-11657

Texas Department of Transportation
© 2012

IH 35W FROM NORTH TARRANT PKWY TO IH 820

INTERIOR BENT NO. 7

NB IH35W EXIT RAMP
FROM MANAGED LANES

SCALE: NTS — SHEET 4 OF 5

DESIGN	FED.RD. DIV.NO.	FEDERAL AID PROJECT NO.		HIGHWAY NO.
CLF	6	(SEE TITLE SHEET)		IH 35W
GRAPHICS AXD	STATE	DISTRICT	COUNTY	SHEET NO.
CHECK SB	TEXAS	FTW	TARRANT	1621
CHECK CLF	CONTROL	SECTION	JOB	
	0014	16	255, ETC.	

DRAWING DATE: 7/28/2012 FILENAME: S38BR*MLN-BB*1B*07.dgn

① TABLE OF VARIABLE QUANTITIES

BENT	"H"	CL. "C" CONC. (MASS) (HPC) (COL)	BARS V1 60 ~ #14		BARS V2 #14 x 15'-0"		BARS Z1 #4 x 23'-3"		BARS Z2 #4 x 15'-1"		BARS Z3 #4 x 8'-2"		TOTAL EST. QUANT. REINF. STEEL	CL. "C" CONC. (MASS) (HPC) (COL)	CL. "F" CONC. (MASS) (HPC) (CAP)
NO.	FT	CY	LENGTH	WT.	NO.	WT.	NO.	WT.	NO.	WT.	NO.	WT.	LB	CY	CY
7(L)	27	49.0	29'-10"	13,693	12	1,377	28	435	28	282	42	229	63,321	98.0	187.6
7(R)	27	49.0	29'-10"	13,693	12	1,377	28	435	28	282	42	229			

① QUANTITIES SHOWN ARE FOR ONE COLUMN ONLY.

TABLE OF CONSTANT QUANTITIES

BAR	NO.	SIZE	LENGTH	WEIGHT
A ***	14	#11	97'-4"	7,240
B ***	14	#11	89'-11"	6,688
E1	32	#6	8'-10"	425
E2	36	#6	8'-6"	460
L1*	28	#14	16'-0"	3,427
L2*	28	#14	15'-0"	3,213
S1	84	#6	30'-6"	3,848
S2	84	#6	24'-0"	3,028
T **	18	#6	92'-0"	2,487
U1	12	#6	8'-6"	153
U2	19	#6	6'-8"	190
U3	16	#6	5'-5"	130
REINFORCING STEEL			LB	31,289
CL"F" CONC(MASS) (HPC) (CAP)			CY	187.6
CL"C" CONC(MASS) (HPC) (COL)			CY	98.0
PRESTRESS (GROUT)			MKF	274

* INCLUDES ONE WELDED SPLICE
** INCLUDES ONE 2'-1" LAP SPLICE
*** INCLUDES ONE 8'-11" LAP SPLICE

GENERAL NOTES:

DESIGNED ACCORDING TO AASHTO LRFD SPECIFICATIONS, 5TH EDITION (2010).

CLASS "F" (HPC) CONCRETE STRENGTH F'C = 7,500 PSI.

CLASS "C" (HPC) CONCRETE STRENGTH F'C = 3,600 PSI.

ALL REINFORCING STEEL SHALL BE GRADE 60.

SEE SHEET 3 OF 5 FOR POST-TENSIONING DETAILS, NOTES, AND PROCEDURES.

SEE FOUNDATION DETAILS FOR ALL FOUNDATION NOTES.

CALCULATED FOUNDATION LOAD: 474 TONS/D.S.

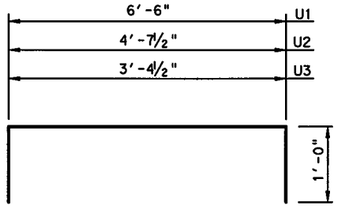

BARS U1, U2 & U3

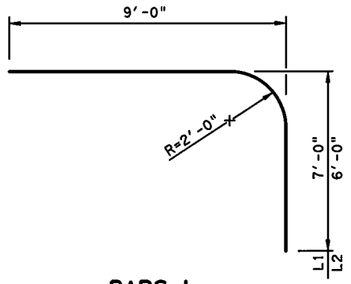

BARS L

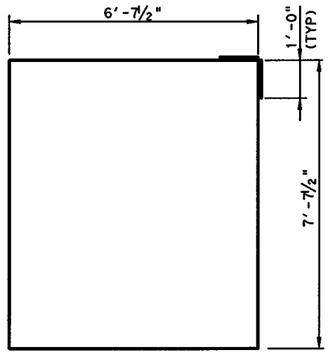

BARS S1

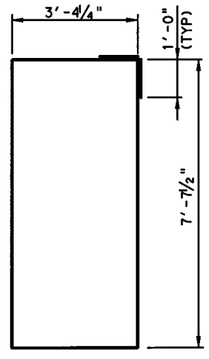

BARS S2

THE TOP, SIDES, AND ENDS, EXCEPT UNDER BEARING AREAS, SHALL BE TREATED WITH A "CLASS II, TYPE I PENETRATING CONCRETE SURFACE TREATMENT"

SLOPE TOP PORTION OF CAP - 12:1

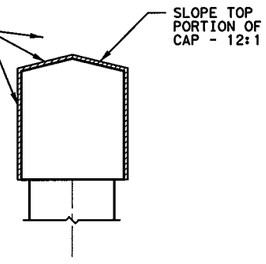

CONCRETE SURFACE TREATMENT DETAIL FOR INTERIOR BENT

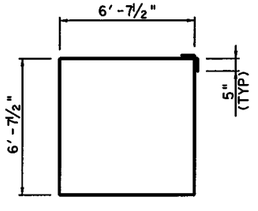

BARS Z_1

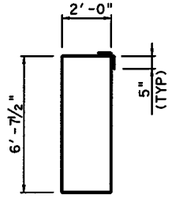

BARS Z_2

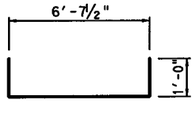

BARS Z_3

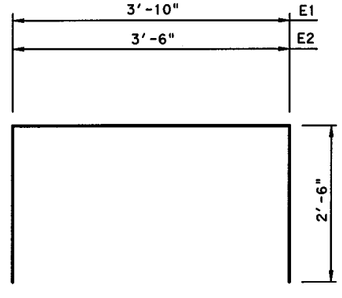

BARS E1 & E2

7/26/12

STATE OF TEXAS
CORBETT L. FREEMAN
86913
LICENSED
PROFESSIONAL ENGINEER

HL 93 LOADING

I. S. ENGINEERS, LLC
TBPE REG. # F-11657

Texas Department of Transportation
© 2012

IH 35W FROM NORTH TARRANT PKWY TO IH 820

INTERIOR BENT NO. 7
NB IH35W EXIT RAMP
FROM MANAGED LANES

SCALE: NTS — SHEET 5 OF 5

DESIGN	FED. RD. DIV. NO.	FEDERAL AID PROJECT NO.		HIGHWAY NO.
CLF	6	(SEE TITLE SHEET)		IH 35W
GRAPHICS AXD	STATE	DISTRICT	COUNTY	SHEET NO.
CHECK SB	TEXAS	FTW	TARRANT	1622
CHECK CLF	CONTROL	SECTION	JOB	
	0014	16	255, ETC.	

FILENAME: S3BBR*MLN-BB*IB*08.dgn
DRAWING DATE: 7/28/2012

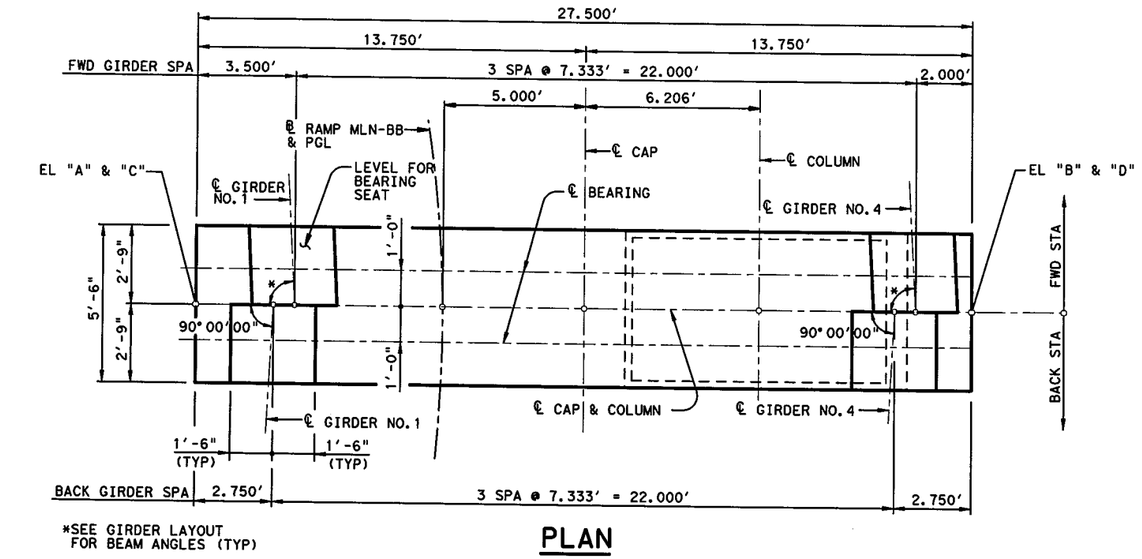

PLAN

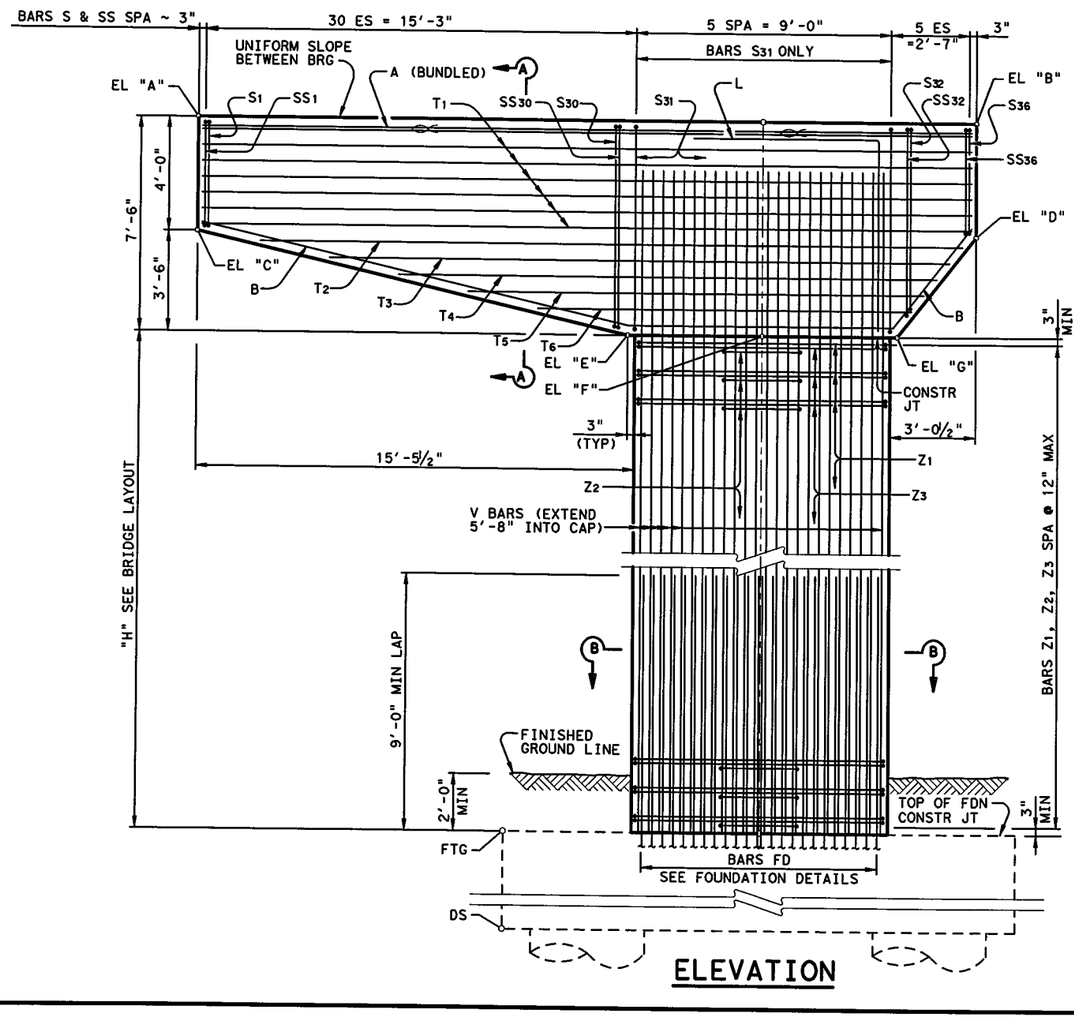

ELEVATION

GENERAL NOTES:

DESIGNED ACCORDING TO AASHTO LRFD SPECIFICATIONS, 5TH EDITION (2010).

CLASS "C" (HPC) CONCRETE STRENGTH F'C = 3,600 PSI.

ALL REINFORCING SHALL BE GRADE 60.

SEE FOUNDATION DETAILS FOR ALL FOUNDATION NOTES.

CALCULATED FOUNDATION LOAD: 586 TONS / D.S.

TABLE OF ELEVATIONS

"A"	"B"	"C"	"D"	"E"	"F"	"G"	FTG	TOP OF DS*	DS TIP	AS-BUILT DS TIP
643.985	645.332	639.985	641.332	637.242	637.462	637.683	614.462	608.462	576.462	

* TOP OF DRILLED SHAFT ELEVATIONS WERE ESTIMATED BASED ON GROUND ELEVATION INFORMATION AVAILABLE AT THE TIME OF DESIGN. CONTRACTOR SHALL CONFIRM THESE ELEVATIONS PRIOR TO DRILLING.

7/11/12
STATE OF TEXAS
CORBETT L. FREEMAN
86913
LICENSED PROFESSIONAL ENGINEER

HL 93 LOADING

I. S. ENGINEERS, LLC
TBPE REG. # F-11657

Texas Department of Transportation
© 2012

IH 35W FROM NORTH TARRANT PKWY TO IH 820

INTERIOR BENT NO. 8
NB IH35W EXIT RAMP
FROM MANAGED LANES

SCALE: NTS — SHEET 1 OF 2

DESIGN	FED. RD. DIV. NO.	FEDERAL AID PROJECT NO.		HIGHWAY NO.
CLF	6	(SEE TITLE SHEET)		IH 35W
GRAPHICS AXD	STATE	DISTRICT	COUNTY	SHEET NO.
CHECK SB	TEXAS	FTW	TARRANT	
CHECK CLF	CONTROL	SECTION	JOB	1623
	0014	16	255, ETC.	

DRAWING DATE: 7/13/2012 FILENAME: S3BBR*MLN-BB*IB*09a.dgn

③ TABLE OF COLUMN QUANTITIES

BENT	"H"	CL. "C" CONC. (MASS) (HPC) (COL)	BARS V 76 ~ #11		BARS Z1 #4 x 27'-4"		BARS Z2 #4 x 15'-7"		BARS Z3 #4 x 9'-11"	
NO.	FT	CY	LENGTH	WT.	NO.	WT.	NO.	WT.	NO.	WT.
8	23	38.3	28'-8"	11,575	24	438	24	250	24	159

②④ TOTAL ESTIMATED QUANTITIES

REINF. STEEL	CL. "C" CONC (MASS) (HPC) (COL)	CL. "C" CONC (MASS) (HPC) (CAP)
LB	CY	CY
21,522	38.3	36.2

TABLE OF CONSTANT QUANTITIES ②

BAR	NO.	SIZE	LENGTH	WEIGHT
A	28	#11	27'-2"	4,041
B	6	#8	29'-3"	469
E1	16	#6	6'-8"	160
E2	16	#6	6'-5"	154
L	14	#11	13'-0"	967
S1-30 AVG	30	#6	22'-11"	1,033
S31	6	#6	26'-6"	239
S32-36 AVG	5	#6	22'-3"	167
SS1-30 AVG	30	#6	20'-11"	943
SS32-36 AVG	5	#6	20'-3"	152
T1	12	#6	27'-2"	490
T2-6 AVG	10	#6	19'-0"	285
REINFORCING STEEL			LBS	9,100
CL "C" CONC (MASS) (HPC) (CAP)			CY	36.2

② QUANTITIES SHOWN ARE FOR ONE BENT ONLY.

③ ADJUST BARS V LENGTH BY 1 FT AND NUMBER OF BARS Z BY 1 FOR EACH LINEAR FOOT OF VARIATION IN "H" VALUE.

④ ADJUST REINFORCING STEEL TOTAL BY 441 LBS AND CLASS "C" CONCRETE TOTAL BY 1.667 CY FOR EACH LINEAR FOOT OF VARIATION IN "H" VALUE.

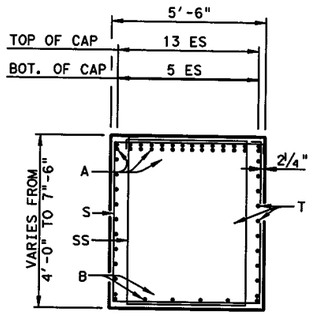

SECTION A-A

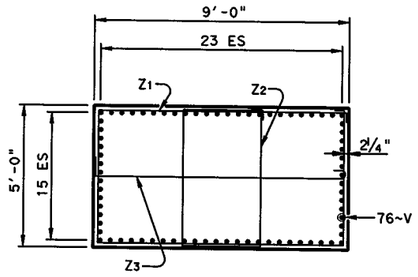

SECTION B-B

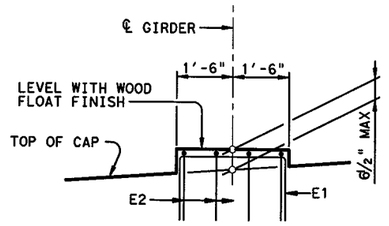

FWD SPAN

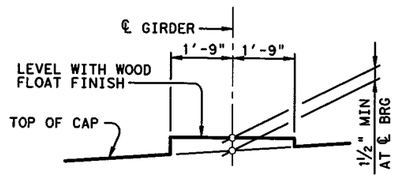

BACK SPAN

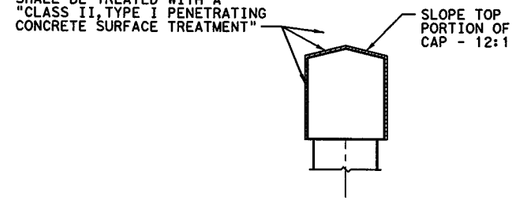

CONCRETE SURFACE TREATMENT DETAIL FOR INTERIOR BENT

BEARING SEAT DETAIL

(BEARING SURFACE SHALL BE CLEAN AND FREE OF ALL LOOSE MATERIAL BEFORE PLACING BEARING PAD.)

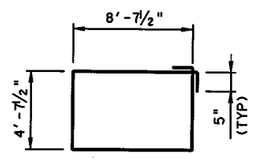

BARS Z1

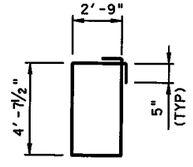

BARS Z2

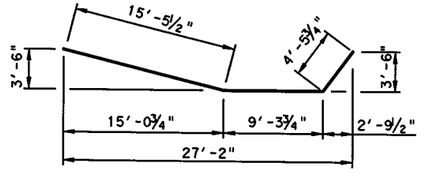

BARS B

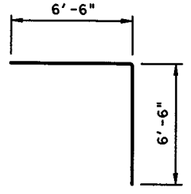

BARS L

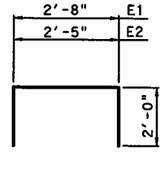

BARS E

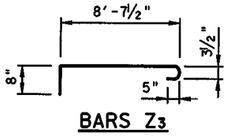

BARS Z3

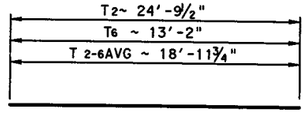

VARIABLE BARS T

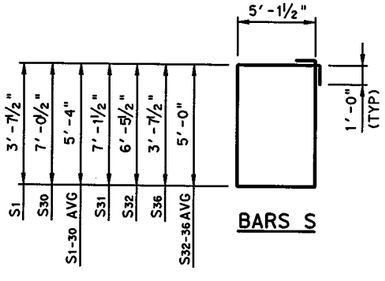

BARS S

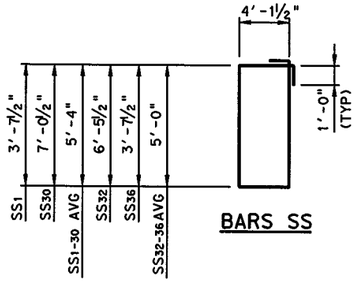

BARS SS

7/11/12
STATE OF TEXAS
CORBETT L. FREEMAN
86913
LICENSED PROFESSIONAL ENGINEER

HL 93 LOADING

I. S. ENGINEERS, LLC
TBPE REG. # F-11657

Texas Department of Transportation
© 2012

IH 35W FROM NORTH TARRANT PKWY TO IH 820

INTERIOR BENT NO. 8

NB IH35W EXIT RAMP FROM MANAGED LANES

SCALE: NTS — SHEET 2 OF 2

DESIGN	FED.RD. DIV.NO.	FEDERAL AID PROJECT NO.		HIGHWAY NO.
CLF	6	(SEE TITLE SHEET)		IH 35W
GRAPHICS AXD	STATE	DISTRICT	COUNTY	SHEET NO.
CHECK SB	TEXAS	FTW	TARRANT	1624
CHECK CLF	CONTROL 0014	SECTION 16	JOB 255, ETC.	

FILENAME: S3BBR*MLN-BB*IB#09b.dgn

DRAWING DATE: 7/13/2012

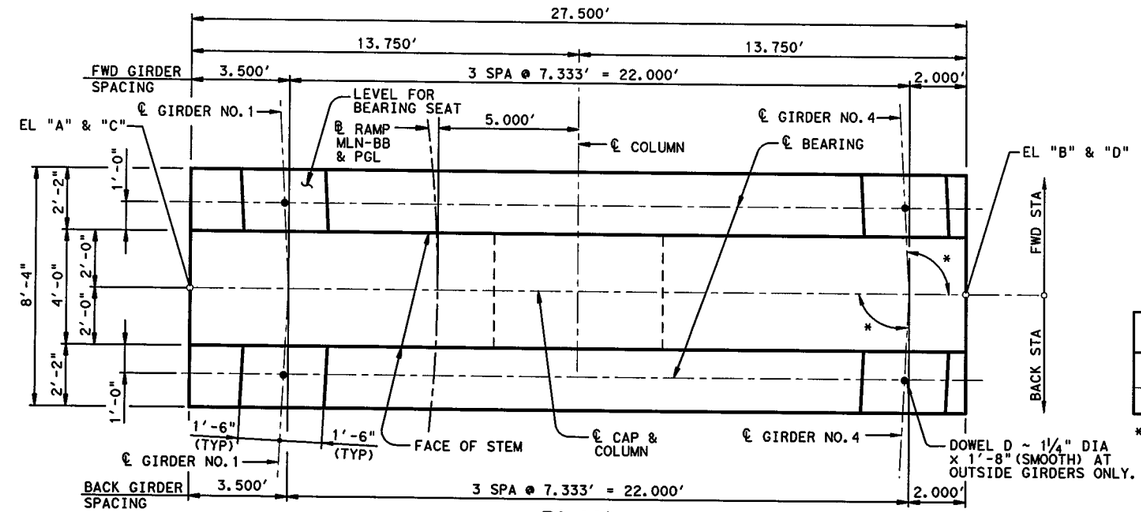

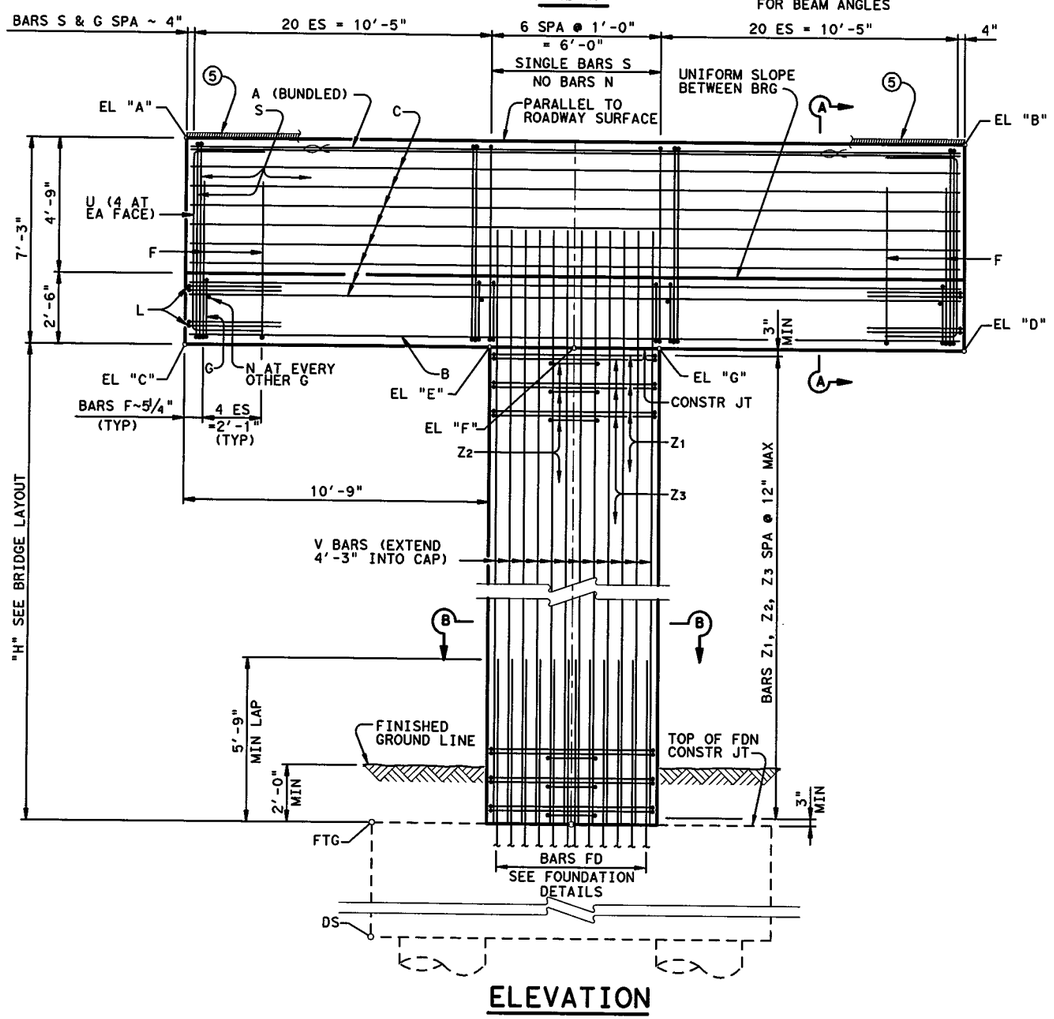

ELEVATION

GENERAL NOTES:

DESIGNED ACCORDING TO AASHTO LRFD SPECIFICATIONS, 5TH EDITION (2010).

CLASS "C" (HPC) CONCRETE STRENGTH F'C = 3,600 PSI.

ALL REINFORCING SHALL BE GRADE 60.

SEE FOUNDATION DETAILS FOR ALL FOUNDATION NOTES.

CALCULATED FOUNDATION LOAD: 355 TONS / D.S.

TABLE OF ELEVATIONS

"A"	"B"	"C"	"D"	"E"	"F"	"G"	FTG	TOP OF DS*	DS TIP	AS-BUILT DS TIP
643.031	644.381	635.781	637.131	636.308	636.456	636.603	614.456	608.456	578.456	

* TOP OF DRILLED SHAFT ELEVATIONS WERE ESTIMATED BASED ON GROUND ELEVATION INFORMATION AVAILABLE AT THE TIME OF DESIGN. CONTRACTOR SHALL CONFIRM THESE ELEVATIONS PRIOR TO DRILLING.

7/11/12

STATE OF TEXAS
CORBETT L. FREEMAN
86913
LICENSED PROFESSIONAL ENGINEER

HL 93 LOADING

I. S. ENGINEERS, LLC
TBPE REG. # F-11657

Texas Department of Transportation
© 2012

IH 35W FROM NORTH TARRANT PKWY TO IH 820

INTERIOR BENT NO. 9
NB IH35W EXIT RAMP FROM MANAGED LANES

SCALE: NTS — SHEET 1 OF 2

DESIGN	FED.RD. DIV.NO.	FEDERAL AID PROJECT NO.		HIGHWAY NO.
CLF	6	(SEE TITLE SHEET)		IH 35W
GRAPHICS: SPL	STATE	DISTRICT	COUNTY	SHEET NO.
CHECK: SB	TEXAS	FTW	TARRANT	1625
CHECK: CLF	CONTROL	SECTION	JOB	
	0014	16	255, ETC.	

DRAWING DATE: 7/13/2012 FILENAME: S3BBR*MLN-BB*IB*10a.dgn

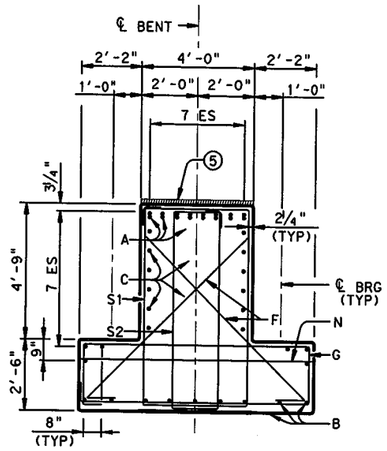

SECTION A-A

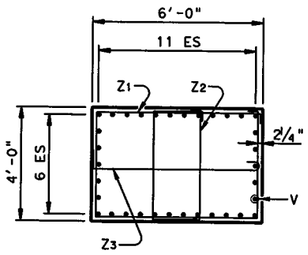

SECTION B-B

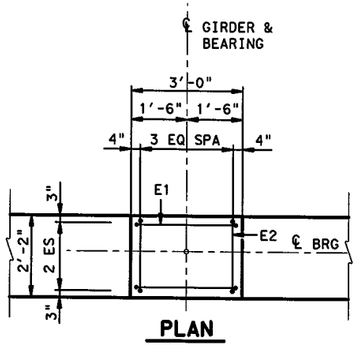

PLAN

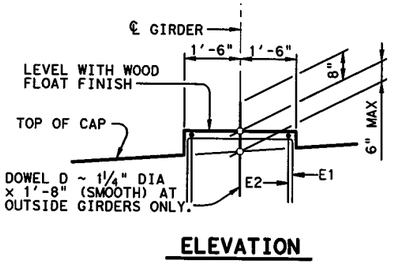

ELEVATION

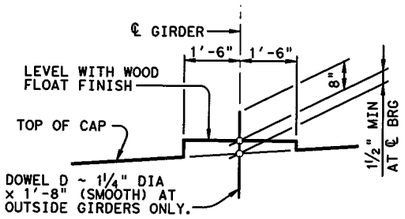

BEARING SEAT DETAIL - FWD SPAN

(BEARING SURFACE SHALL BE CLEAN AND FREE OF ALL LOOSE MATERIAL BEFORE PLACING BEARING PAD.)

BEARING SEAT DETAIL - BACK SPAN

(BEARING SURFACE SHALL BE CLEAN AND FREE OF ALL LOOSE MATERIAL BEFORE PLACING BEARING PAD.)

③ TABLE OF COLUMN QUANTITIES

BENT	"H"	CL. "C" CONC. (HPC) (COL)	BARS V 34 ~ #10		BARS Z1 #4 x 19'-4"		BARS Z2 #4 x 11'-5"		BARS Z3 #4 x 6'-11"	
NO.	FT	CY	LENGTH	WT.	NO.	WT.	NO.	WT.	NO.	WT.
9	22	19.6	26'-3"	3,840	23	297	23	175	23	106

②④ TOTAL ESTIMATED QUANTITIES

REINF. STEEL	CL. "C" CONC. (HPC) (BENT)
LB	CY
12,828	60.8

TABLE OF CONSTANT QUANTITIES ②

BAR	No.	SIZE	LENGTH	WEIGHT
A	16	#11	27'-2"	2,309
B	9	#8	27'-2"	653
C	18	#7	27'-2"	1,000
D	4	1¼" Ø	1'-8"	28
E1	12	#6	6'-8"	120
E2	16	#6	5'-10"	140
F	20	#5	8'-11"	186
G	47	#6	22'-2"	1,565
L	8	#6	13'-1"	157
N	20	#6	8'-0"	240
S1	47	#5	22'-0"	1,078
S2	40	#5	19'-1"	796
U	8	#6	11'-6"	138
REINFORCING STEEL			LBS	8,410
CL"C" CONCRETE (HPC) (CAP)			CY	41.2

THE FRONT AND BACK, STEM FACES, SIDES, AND TOP, EXCEPT UNDER BEARING AREAS, SHALL BE TREATED WITH A "CLASS II, TYPE I PENETRATING CONCRETE SURFACE TREATMENT".

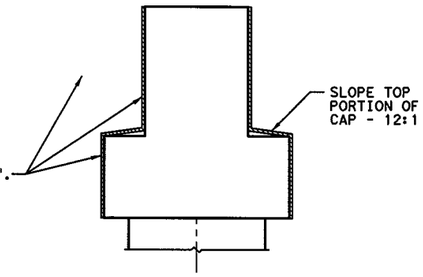

CONCRETE SURFACE TREATMENT DETAIL FOR INV.-TEE BENT

② QUANTITIES SHOWN ARE FOR ONE BENT ONLY.

③ ADJUST BARS V LENGTH BY 1 FT AND NUMBER OF BARS Z BY 1 FOR EACH LINEAR FOOT OF VARIATION IN "H" VALUE.

④ ADJUST REINFORCING STEEL TOTAL BY 173 LBS AND CLASS "C" CONCRETE TOTAL BY 0.889 CY FOR EACH LINEAR FOOT OF VARIATION IN "H" VALUE.

⑤ ½" PREFORMED BITUMINOUS FIBER MATERIAL TO BE USED ON TOP OF STEM.

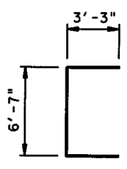

BARS L

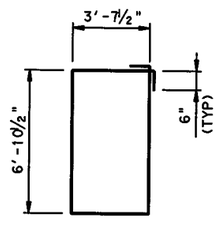

BARS S1

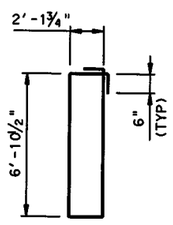

BARS S2

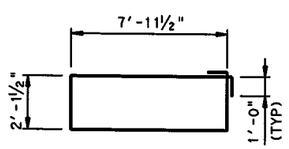

BARS G

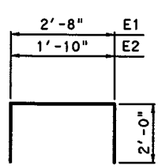

BARS E

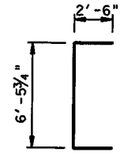

BARS U

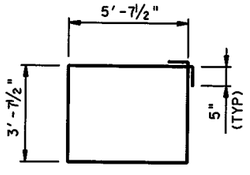

BARS Z1

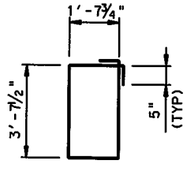

BARS Z2

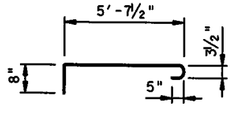

BARS Z3

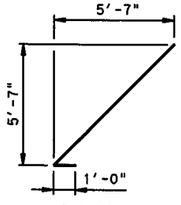

BARS F

7/11/12

STATE OF TEXAS
CORBETT L. FREEMAN
86913
LICENSED PROFESSIONAL ENGINEER

HL 93 LOADING

I. S. ENGINEERS, LLC
TBPE REG. # F-11657

Texas Department of Transportation
© 2012

IH 35W FROM NORTH TARRANT PKWY TO IH 820

INTERIOR BENT NO. 9
NB IH35W EXIT RAMP FROM MANAGED LANES

SCALE: NTS — SHEET 2 OF 2

DESIGN	FED.RD. DIV.NO.	FEDERAL AID PROJECT NO.		HIGHWAY NO.
CLF	6	(SEE TITLE SHEET)		IH 35W
GRAPHICS SPL	STATE	DISTRICT	COUNTY	SHEET NO.
CHECK SB	TEXAS	FTW	TARRANT	1626
CHECK CLF	CONTROL	SECTION	JOB	
	0014	16	255, ETC.	

FILENAME: S3BBR*MLN-BB*IB*10b.dgn
DRAWING DATE: 7/13/2012

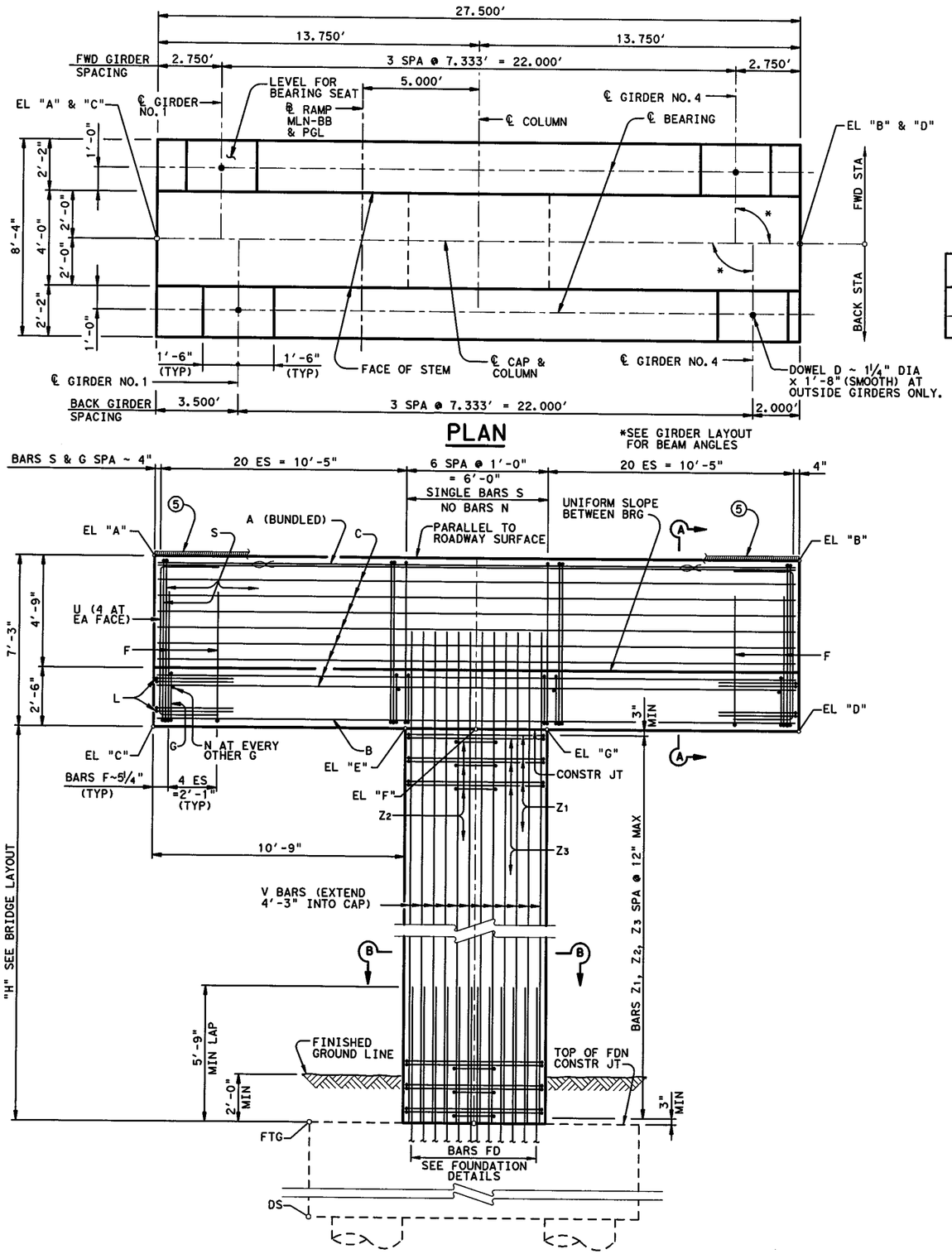

GENERAL NOTES:

DESIGNED ACCORDING TO AASHTO LRFD SPECIFICATIONS, 5TH EDITION (2010).

CLASS "C" (HPC) CONCRETE STRENGTH F'C = 3,600 PSI.

ALL REINFORCING SHALL BE GRADE 60.

SEE FOUNDATION DETAILS FOR ALL FOUNDATION NOTES.

CALCULATED FOUNDATION LOAD: 355 TONS / D.S.

TABLE OF ELEVATIONS

"A"	"B"	"C"	"D"	"E"	"F"	"G"	FTG	TOP OF DS*	DS TIP	AS-BUILT DS TIP
637.267	638.187	630.017	630.937	630.377	630.477	630.577	613.477	607.477	578.477	

* TOP OF DRILLED SHAFT ELEVATIONS WERE ESTIMATED BASED ON GROUND ELEVATION INFORMATION AVAILABLE AT THE TIME OF DESIGN. CONTRACTOR SHALL CONFIRM THESE ELEVATIONS PRIOR TO DRILLING.

7/11/12

STATE OF TEXAS
CORBETT L. FREEMAN
86913
LICENSED
PROFESSIONAL ENGINEER

HL 93 LOADING

I. S. ENGINEERS, LLC
TBPE REG. # F-11657

Texas Department of Transportation
© 2012

IH 35W FROM NORTH TARRANT PKWY TO IH 820

INTERIOR BENT NO. 10
NB IH35W EXIT RAMP FROM MANAGED LANES

SCALE: NTS — SHEET 1 OF 2

DESIGN	FED.RD. DIV.NO.	FEDERAL AID PROJECT NO.		HIGHWAY NO.
CLF	6	(SEE TITLE SHEET)		IH 35W
GRAPHICS SPL	STATE	DISTRICT	COUNTY	SHEET NO.
CHECK SB	TEXAS	FTW	TARRANT	1627
CHECK CLF	CONTROL	SECTION	JOB	
	0014	16	255, ETC.	

FILENAME: S3BBR*MLN-BB*IB*11a.dgn

DRAWING DATE: 7/13/2012

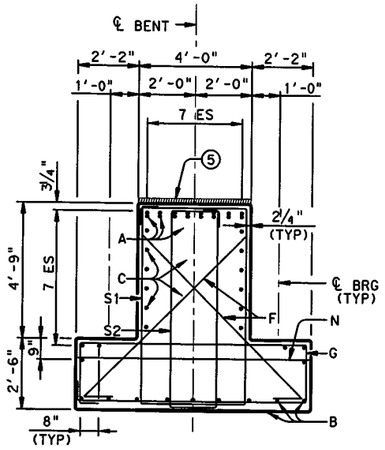

SECTION A-A

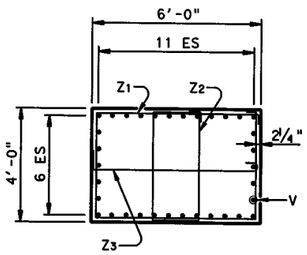

SECTION B-B

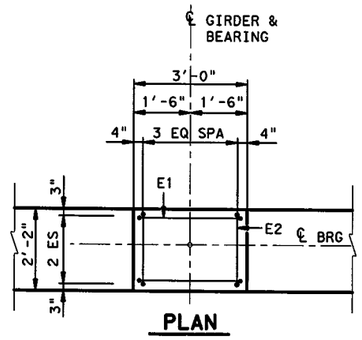

PLAN

THE FRONT AND BACK, STEM FACES, SIDES, AND TOP, EXCEPT UNDER BEARING AREAS, SHALL BE TREATED WITH A "CLASS II, TYPE I PENETRATING CONCRETE SURFACE TREATMENT".

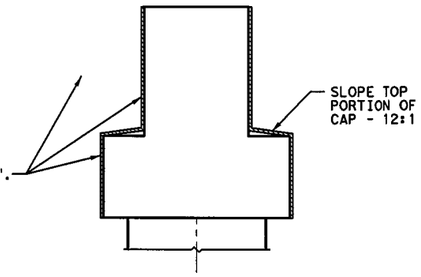

CONCRETE SURFACE TREATMENT DETAIL FOR INV.-TEE BENT

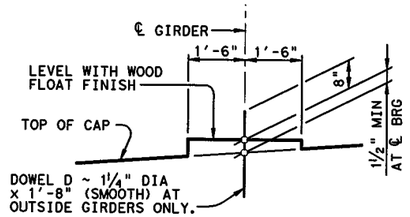

BEARING SEAT DETAIL - FWD SPAN

(BEARING SURFACE SHALL BE CLEAN AND FREE OF ALL LOOSE MATERIAL BEFORE PLACING BEARING PAD.)

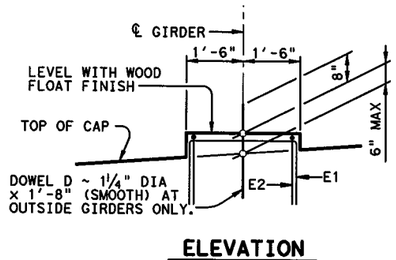

ELEVATION

BEARING SEAT DETAIL - BACK SPAN

(BEARING SURFACE SHALL BE CLEAN AND FREE OF ALL LOOSE MATERIAL BEFORE PLACING BEARING PAD.)

③ TABLE OF COLUMN QUANTITIES

BENT	"H"	CL. "C" CONC. (HPC) (COL)	BARS V 34 ~ #10		BARS Z1 #4 x 19'-4"		BARS Z2 #4 x 11'-5"		BARS Z3 #4 x 6'-11"	
NO.	FT	CY	LENGTH	WT.	NO.	WT.	NO.	WT.	NO.	WT.
10	17	15.1	21'-3"	3,109	18	232	18	137	18	83

②④ TOTAL ESTIMATED QUANTITIES

REINF. STEEL	CL. "C" CONC. (HPC) (BENT)
LB	CY
11,971	56.3

TABLE OF CONSTANT QUANTITIES ②

BAR	No.	SIZE	LENGTH	WEIGHT
A	16	#11	27'-2"	2,309
B	9	#8	27'-2"	653
C	18	#7	27'-2"	1,000
D	4	1 1/4" ∅	1'-8"	28
E1	12	#6	6'-8"	120
E2	16	#6	5'-10"	140
F	20	#5	8'-11"	186
G	47	#6	22'-2"	1,565
L	8	#6	13'-1"	157
N	20	#6	8'-0"	240
S1	47	#5	22'-0"	1,078
S2	40	#5	19'-1"	796
U	8	#6	11'-6"	138
REINFORCING STEEL			LBS	8,410
CL"C" CONCRETE (HPC)(CAP)			CY	41.2

② QUANTITIES SHOWN ARE FOR ONE BENT ONLY.

③ ADJUST BARS V LENGTH BY 1 FT AND NUMBER OF BARS Z BY 1 FOR EACH LINEAR FOOT OF VARIATION IN "H" VALUE.

④ ADJUST REINFORCING STEEL TOTAL BY 173 LBS AND CLASS "C" CONCRETE TOTAL BY 0.889 CY FOR EACH LINEAR FOOT OF VARIATION IN "H" VALUE.

⑤ 1/2" PREFORMED BITUMINOUS FIBER MATERIAL TO BE USED ON TOP OF STEM.

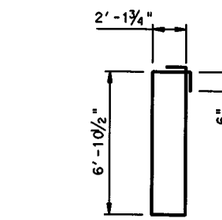

BARS L

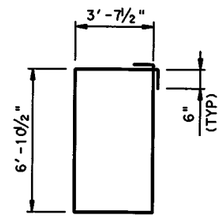

BARS S1

BARS S2

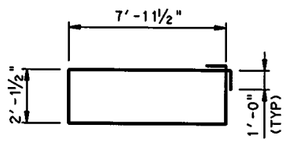

BARS G

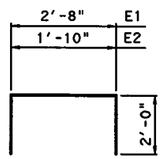

BARS E

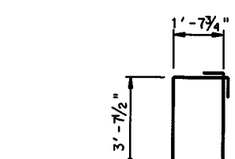

BARS U

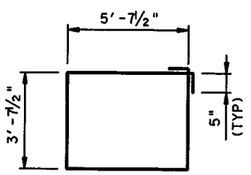

BARS Z1

BARS Z2

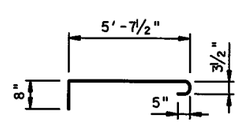

BARS Z3

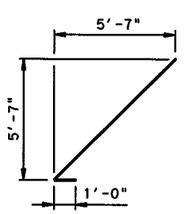

BARS F

HL 93 LOADING

7/11/12
STATE OF TEXAS
CORBETT L. FREEMAN
86913
LICENSED PROFESSIONAL ENGINEER

I. S. ENGINEERS, LLC
TBPE REG. # F-11657

Texas Department of Transportation
© 2012

IH 35W FROM NORTH TARRANT PKWY TO IH 820

INTERIOR BENT NO. 10
NB IH35W EXIT RAMP
FROM MANAGED LANES

SCALE: NTS — SHEET 2 OF 2

DESIGN	FED.RD. DIV.NO.	FEDERAL AID PROJECT NO.		HIGHWAY NO.
CLF	6	(SEE TITLE SHEET)		IH 35W
GRAPHICS SPL	STATE	DISTRICT	COUNTY	SHEET NO.
CHECK SB	TEXAS	FTW	TARRANT	
CHECK CLF	CONTROL	SECTION	JOB	1628
	0014	16	255, ETC.	

FILENAME: S3BBR*MLN-BB*IB*11b.dgn
DRAWING DATE: 7/13/2012

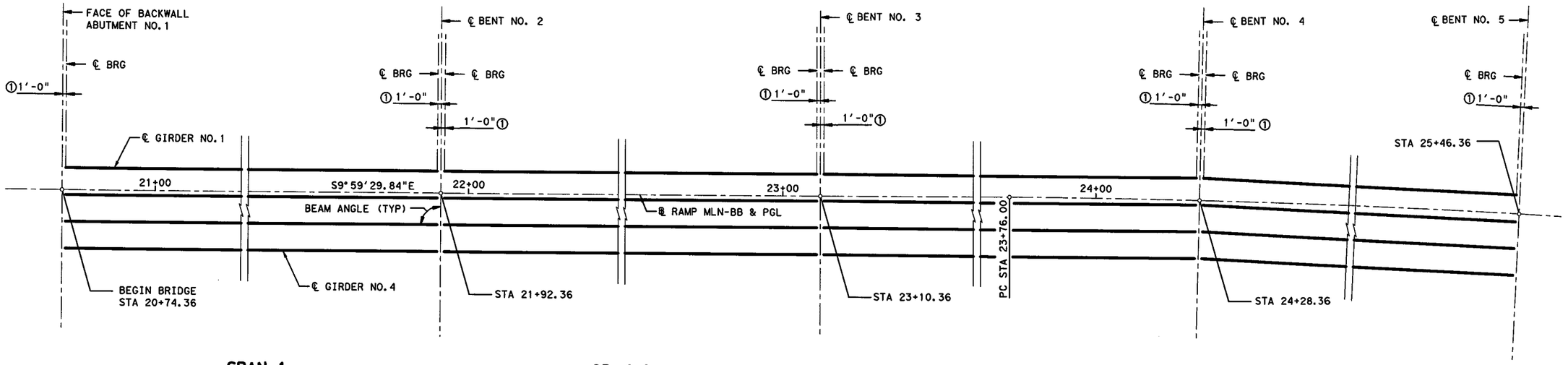

SPAN 1
(TX54 GIRDERS)

SPAN 2
(TX54 GIRDERS)

SPAN 3
(TX54 GIRDERS)

SPAN 4
(TX54 GIRDERS)

BENT REPORT

BENT NO. 1 (S 80 0 30.16 W)
DISTANCE BETWEEN STATION LINE AND BEAM 1 6.000 L

			BEAM SPAC. (C.L. BENT)	BEAM ANGLE D	M	S
SPAN 1	BEAM	1	0.000	90	0	0
	BEAM	2	7.333	90	0	0
	BEAM	3	7.333	90	0	0
	BEAM	4	7.333	90	0	0
	TOTAL		22.000			

BENT NO. 2 (S 80 0 30.16 W)
DISTANCE BETWEEN STATION LINE AND BEAM 1 6.000 L

			BEAM SPAC. (C.L. BENT)	BEAM ANGLE D	M	S
SPAN 1	BEAM	1	0.000	90	0	0
	BEAM	2	7.333	90	0	0
	BEAM	3	7.333	90	0	0
	BEAM	4	7.333	90	0	0
	TOTAL		22.000			
SPAN 2	BEAM	1	0.000	90	0	0
	BEAM	2	7.333	90	0	0
	BEAM	3	7.333	90	0	0
	BEAM	4	7.333	90	0	0
	TOTAL		22.000			

BENT NO. 3 (S 80 0 30.16 W)
DISTANCE BETWEEN STATION LINE AND BEAM 1 6.000 L

			BEAM SPAC. (C.L. BENT)	BEAM ANGLE D	M	S
SPAN 2	BEAM	1	0.000	90	0	0
	BEAM	2	7.333	90	0	0
	BEAM	3	7.333	90	0	0
	BEAM	4	7.333	90	0	0
	TOTAL		22.000			
SPAN 3	BEAM	1	0.000	89	40	56
	BEAM	2	7.333	89	40	59
	BEAM	3	7.333	89	41	1
	BEAM	4	7.333	89	41	3
	TOTAL		22.000			

BENT NO. 4 (S 81 26 13.59 W)
DISTANCE BETWEEN STATION LINE AND BEAM 1 6.000 L

			BEAM SPAC. (C.L. BENT)	BEAM ANGLE D	M	S
SPAN 3	BEAM	1	0.000	88	53	19
	BEAM	2	7.333	88	53	17
	BEAM	3	7.333	88	53	15
	BEAM	4	7.333	88	53	12
	TOTAL		22.000			
SPAN 4	BEAM	1	0.000	88	23	24
	BEAM	2	7.333	88	23	24
	BEAM	3	7.333	88	23	24
	BEAM	4	7.333	88	23	24
	TOTAL		22.000			

BENT NO. 5 (S 84 39 23.71 W)
DISTANCE BETWEEN STATION LINE AND BEAM 1 6.000 L

			BEAM SPAC. (C.L. BENT)	BEAM ANGLE D	M	S
SPAN 4	BEAM	1	0.000	88	23	24
	BEAM	2	7.333	88	23	24
	BEAM	3	7.333	88	23	24
	BEAM	4	7.333	88	23	24
	TOTAL		22.000			

BEAM REPORT

BEAM REPORT, SPAN 1

	HORIZONTAL DISTANCE C-C BENT	C-C BRG.	TRUE DISTANCE BOT. BM. FLG. ②	
BEAM 1	118.000	116.000	117.54	0.0254
BEAM 2	118.000	116.000	117.54	0.0254
BEAM 3	118.000	116.000	117.54	0.0254
BEAM 4	118.000	116.000	117.54	0.0254

BEAM REPORT, SPAN 2

	HORIZONTAL DISTANCE C-C BENT	C-C BRG.	TRUE DISTANCE BOT. BM. FLG. ②	
BEAM 1	118.000	116.000	117.57	0.0333
BEAM 2	118.000	116.000	117.56	0.0323
BEAM 3	118.000	116.000	117.56	0.0313
BEAM 4	118.000	116.000	117.55	0.0302

BEAM REPORT, SPAN 3

	HORIZONTAL DISTANCE C-C BENT	C-C BRG.	TRUE DISTANCE BOT. BM. FLG. ②	
BEAM 1	118.146	116.146	117.71	0.0337
BEAM 2	117.963	115.963	117.52	0.0311
BEAM 3	117.780	115.780	117.33	0.0285
BEAM 4	117.597	115.597	117.14	0.0259

BEAM REPORT, SPAN 4

	HORIZONTAL DISTANCE C-C BENT	C-C BRG.	TRUE DISTANCE BOT. BM. FLG. ②	
BEAM 1	118.322	116.321	117.85	0.0205
BEAM 2	117.910	115.909	117.43	0.0204
BEAM 3	117.498	115.497	117.02	0.0203
BEAM 4	117.086	115.085	116.61	0.0203

① SEE IGEB STANDARD FOR ORIENTATION OF DIMENSION.

② GIRDER LENGTHS SHOWN ARE BOTTOM OF GIRDER FLANGE LENGTHS WITH ADJUSTMENTS MADE FOR BEAM SLOPE.

7/13/12
STATE OF TEXAS
CORBETT L. FREEMAN
86913
LICENSED
PROFESSIONAL ENGINEER

HL 93 LOADING

I. S. ENGINEERS, LLC
TBPE REG. # F-11657

Texas Department of Transportation
© 2012

IH 35W FROM NORTH TARRANT PKWY TO IH 820

GIRDER LAYOUT (SPANS 1-4)

NB IH35W EXIT RAMP FROM MANAGED LANES

SCALE: 1" = 30' SHEET 1 OF 2

DESIGN	FED.RD. DIV.NO.	FEDERAL AID PROJECT NO.		HIGHWAY NO.
CLF	6	(SEE TITLE SHEET)		IH 35W
GRAPHICS SPL	STATE	DISTRICT	COUNTY	SHEET NO.
CHECK SB	TEXAS	FTW	TARRANT	
CHECK CLF	CONTROL	SECTION	JOB	1629
	0014	16	255, ETC.	

DRAWING DATE: 7/13/2012 FILENAME: S3BBRMLN-BB#GF#01.dgn

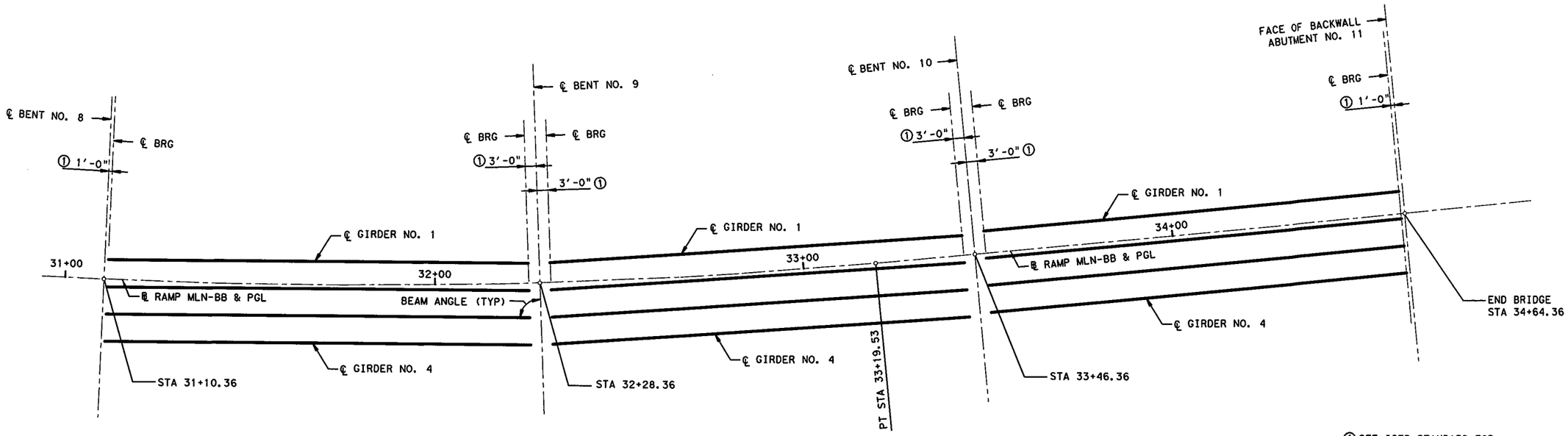

SPAN 8
(TX54 GIRDERS)

SPAN 9
(TX54 GIRDERS)

SPAN 10
(TX54 GIRDERS)

① SEE IGEB STANDARD FOR ORIENTATION OF DIMENSION.

② GIRDER LENGTHS SHOWN ARE BOTTOM OF GIRDER FLANGE LENGTHS WITH ADJUSTMENTS MADE FOR BEAM SLOPE.

BENT REPORT

BENT NO. 8 (S 86 52 38.65 W)
DISTANCE BETWEEN STATION LINE AND BEAM 1 5.250 L

			BEAM SPAC. (C.L. BENT)	BEAM ANGLE D M S
SPAN 8	BEAM	1	0.000	87 53 13
	BEAM	2	7.333	87 53 13
	BEAM	3	7.333	87 53 13
	BEAM	4	7.333	87 53 13
	TOTAL		22.000	

BENT NO. 9 (S 82 39 6.62 W)
DISTANCE BETWEEN STATION LINE AND BEAM 1 5.250 L

			BEAM SPAC. (C.L. BENT)	BEAM ANGLE D M S
SPAN 8	BEAM	1	0.000	87 53 13
	BEAM	2	7.333	87 53 13
	BEAM	3	7.333	87 53 13
	BEAM	4	7.333	87 53 13
	TOTAL		22.000	
SPAN 9	BEAM	1	0.000	87 59 43
	BEAM	2	7.333	87 59 48
	BEAM	3	7.333	87 59 53
	BEAM	4	7.333	87 59 57
	TOTAL		22.000	

BENT NO. 10 (S 79 23 13.68 W)
DISTANCE BETWEEN STATION LINE AND BEAM 1 5.250 L

			BEAM SPAC. (C.L. BENT)	BEAM ANGLE D M S
SPAN 9	BEAM	1	0.000	88 44 23
	BEAM	2	7.333	88 44 18
	BEAM	3	7.333	88 44 13
	BEAM	4	7.333	88 44 9
	TOTAL		22.000	

BENT NO. 10 (S 79 23 13.68 W)
DISTANCE BETWEEN STATION LINE AND BEAM 1 6.000 L

			BEAM SPAC. (C.L. BENT)	BEAM ANGLE D M S
SPAN 10	BEAM	1	0.000	90 0 0
	BEAM	2	7.333	90 0 0
	BEAM	3	7.333	90 0 0
	BEAM	4	7.333	90 0 0
	TOTAL		22.000	

BENT NO. 11 (S 79 23 13.68 W)
DISTANCE BETWEEN STATION LINE AND BEAM 1 6.000 L

			BEAM SPAC. (C.L. BENT)	BEAM ANGLE D M S
SPAN 10	BEAM	1	0.000	90 0 0
	BEAM	2	7.333	90 0 0
	BEAM	3	7.333	90 0 0
	BEAM	4	7.333	90 0 0
	TOTAL		22.000	

BEAM REPORT

BEAM REPORT, SPAN 8

		HORIZONTAL DISTANCE C-C BENT	C-C BRG.	TRUE DISTANCE ② BOT. BM. FLG.	
BEAM	1	117.586	113.583	115.23	-0.0502
BEAM	2	118.127	114.124	115.77	-0.0500
BEAM	3	118.668	114.665	116.31	-0.0498
BEAM	4	119.208	115.206	116.85	-0.0495

BEAM REPORT, SPAN 9

		HORIZONTAL DISTANCE C-C BENT	C-C BRG.	TRUE DISTANCE ② BOT. BM. FLG.	
BEAM	1	117.680	111.678	113.32	-0.0494
BEAM	2	118.098	112.095	113.74	-0.0502
BEAM	3	118.516	112.513	114.16	-0.0510
BEAM	4	118.934	112.931	114.58	-0.0517

BEAM REPORT, SPAN 10

		HORIZONTAL DISTANCE C-C BENT	C-C BRG.	TRUE DISTANCE ② BOT. BM. FLG.	
BEAM	1	118.000	114.000	115.64	-0.0493
BEAM	2	118.000	114.000	115.65	-0.0502
BEAM	3	118.000	114.000	115.65	-0.0510
BEAM	4	118.000	114.000	115.66	-0.0519

7/11/12
STATE OF TEXAS
CORBETT L. FREEMAN
86913
LICENSED
PROFESSIONAL ENGINEER

HL 93 LOADING

I. S. ENGINEERS, LLC
TBPE REG. # F-11657

Texas Department of Transportation
© 2012

IH 35W FROM NORTH TARRANT PKWY TO IH 820

GIRDER LAYOUT
(SPANS 8, 9 & 10)
NB IH35W EXIT RAMP
FROM MANAGED LANES

SCALE: 1" = 30' SHEET 2 OF 2

DESIGN	FED.RD. DIV.NO.	FEDERAL AID PROJECT NO.		HIGHWAY NO.
CLF	6	(SEE TITLE SHEET)		IH 35W
GRAPHICS SPL	STATE	DISTRICT	COUNTY	SHEET NO.
CHECK SB	TEXAS	FTW	TARRANT	1630
CHECK CLF	CONTROL	SECTION	JOB	
	0014	16	255, ETC.	

DRAWING DATE: 7/13/2012 FILENAME: S3BBR*MLN-BB*GF*02.dgn

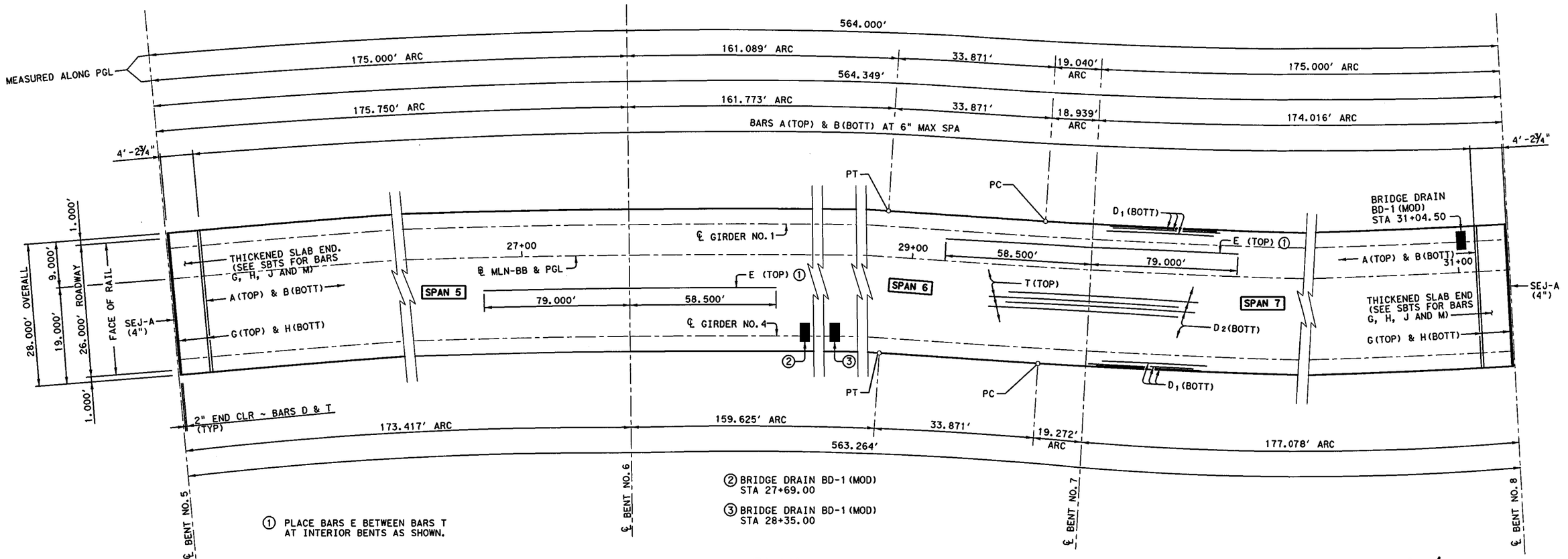

PLAN

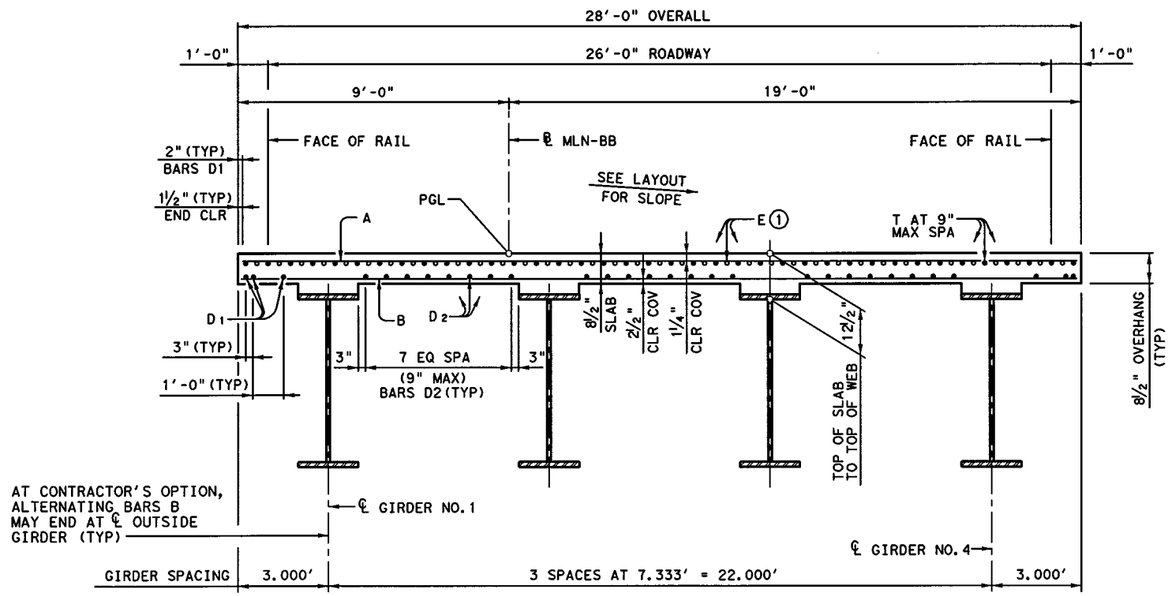

TYPICAL TRANSVERSE SECTION

GENERAL NOTES:

1. DESIGNED ACCORDING TO AASHTO LRFD BRIDGE DESIGN SPECIFICATION, 5TH EDITION (2010).
2. SEE STANDARD SBTS FOR THICKENED SLAB END DETAILS AND QUANTITY ADJUSTMENTS.
3. PRESTRESSED CONCRETE PANELS (PCP) SHALL NOT BE PERMITTED.
4. SEE PMDF STANDARD FOR OPTIONAL STAY IN PLACE FORMING DETAILS.
5. SEE STANDARD SGMD FOR MISCELLANEOUS DETAILS.
6. SEE STANDARD SGEB FOR BEARING DETAILS.
7. ALL REINFORCING STEEL SHALL BE GRADE 60 AND EPOXY COATED.
8. CLASS "S"(HPC) CONCRETE STRENGTH F'C = 4,000 PSI.
9. BAR LAPS, WHERE REQUIRED, SHALL BE AS FOLLOWS:
   EPOXY COATED ~ #4 = 2'-1"
   #5 = 2'-7"

1/28/12

STATE OF TEXAS
CORBETT L. FREEMAN
86913
LICENSED
PROFESSIONAL ENGINEER

HL 93 LOADING

I. S. ENGINEERS, LLC
TBPE REG. # F-11657

Texas Department of Transportation
© 2012

IH 35W FROM NORTH TARRANT PKWY TO IH 820

564.00'
PLATE GIRDER UNIT
NB IH35W EXIT RAMP
FROM MANAGED LANES

SCALE: NTS — SHEET 1 OF 7

DESIGN	FED.RD. DIV.NO.	FEDERAL AID PROJECT NO.		HIGHWAY NO.
CLF	6	(SEE TITLE SHEET)		IH 35W
GRAPHICS	STATE	DISTRICT	COUNTY	SHEET NO.
AXD	TEXAS	FTW	TARRANT	
CHECK	CONTROL	SECTION	JOB	1631
KT	0014	16	255, ETC.	
CHECK				
CLF				

DRAWING DATE: 7/28/2012 FILENAME: S3BBR*MLN-BB*SG*01.dgn

TYPE OF CROSS-FRAMES MEMBER SIZES ③

MEMBER	TYPE "XF2" END CROSS-FRAMES	TYPE "XF2" INTERIOR CROSS-FRAMES
TOP CHORD	5" x 5" x ½"	5" x 5" x ½"
BOTTOM CHORD	5" x 5" x ½"	5" x 5" x ½"
DIAGONALS	5" x 5" x ½"	5" x 5" x ½"

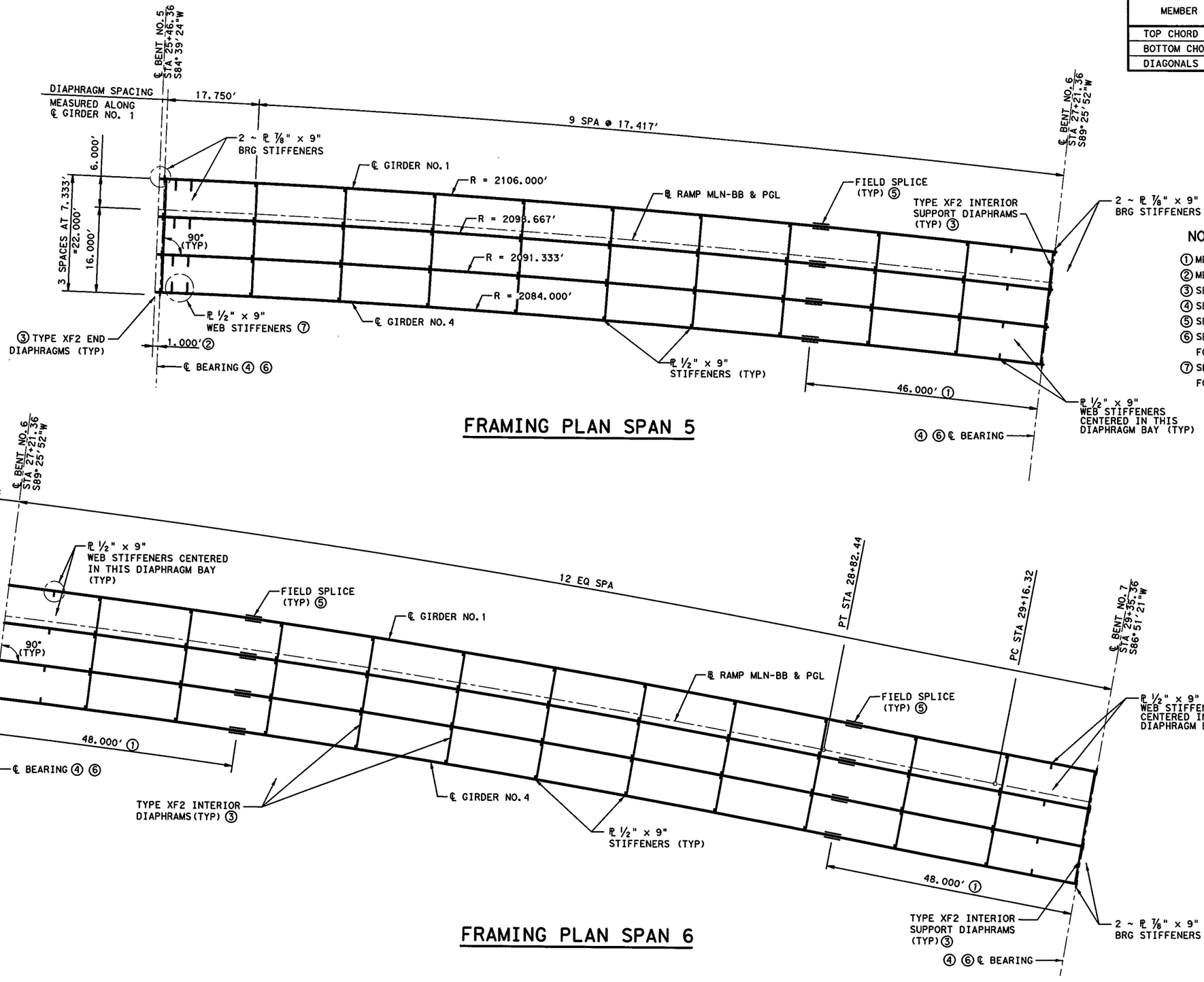

FRAMING PLAN SPAN 5

FRAMING PLAN SPAN 6

NOTES:

① MEASURED ALONG ℙ RAMP MLN-BB.
② MEASURED PERPENDICULAR TO ℄ BENT.
③ SEE SGMD STANDARDS FOR ADDITIONAL DETAILS.
④ SEE SGEB STANDARDS FOR BEARING DETAILS.
⑤ SEE BOLTED FIELD SPLICE DETAILS ON SHEETS 6 OF 7.
⑥ SEE GIRDER ELEVATIONS ON SHEETS 4 AND 5 OF 7 FOR BEARING TYPES.
⑦ SEE GIRDER ELEVATIONS ON SHEETS 4 AND 5 OF 7 FOR LOCATION OF WEB STIFFENERS ON DAPPED END.

7/11/12
STATE OF TEXAS
CORBETT L. FREEMAN
86913
LICENSED
PROFESSIONAL ENGINEER

HL 93 LOADING

I. S. ENGINEERS, LLC
TBPE REG. # F-11657

Texas Department of Transportation
© 2012

IH 35W FROM NORTH TARRANT PKWY TO IH 820
564.00'
PLATE GIRDER UNIT
NB IH35W EXIT RAMP
FROM MANAGED LANES

SCALE: 1" = 20'
SHEET 2 OF 7

DESIGN	FED.RD. DIV.NO.	FEDERAL AID PROJECT NO.		HIGHWAY NO.
KT	6	(SEE TITLE SHEET)		IH 35W
GRAPHICS SPL	STATE	DISTRICT	COUNTY	SHEET NO.
CHECK CLF	TEXAS	FTW	TARRANT	1632
CHECK KT	CONTROL	SECTION	JOB	
	0014	16	255, ETC.	

DRAWING DATE: 7/13/2012 FILENAME: S38BR*MLN-BB*SG*02.dgn

NOTES:
SEE SHEET 2 OF 7.

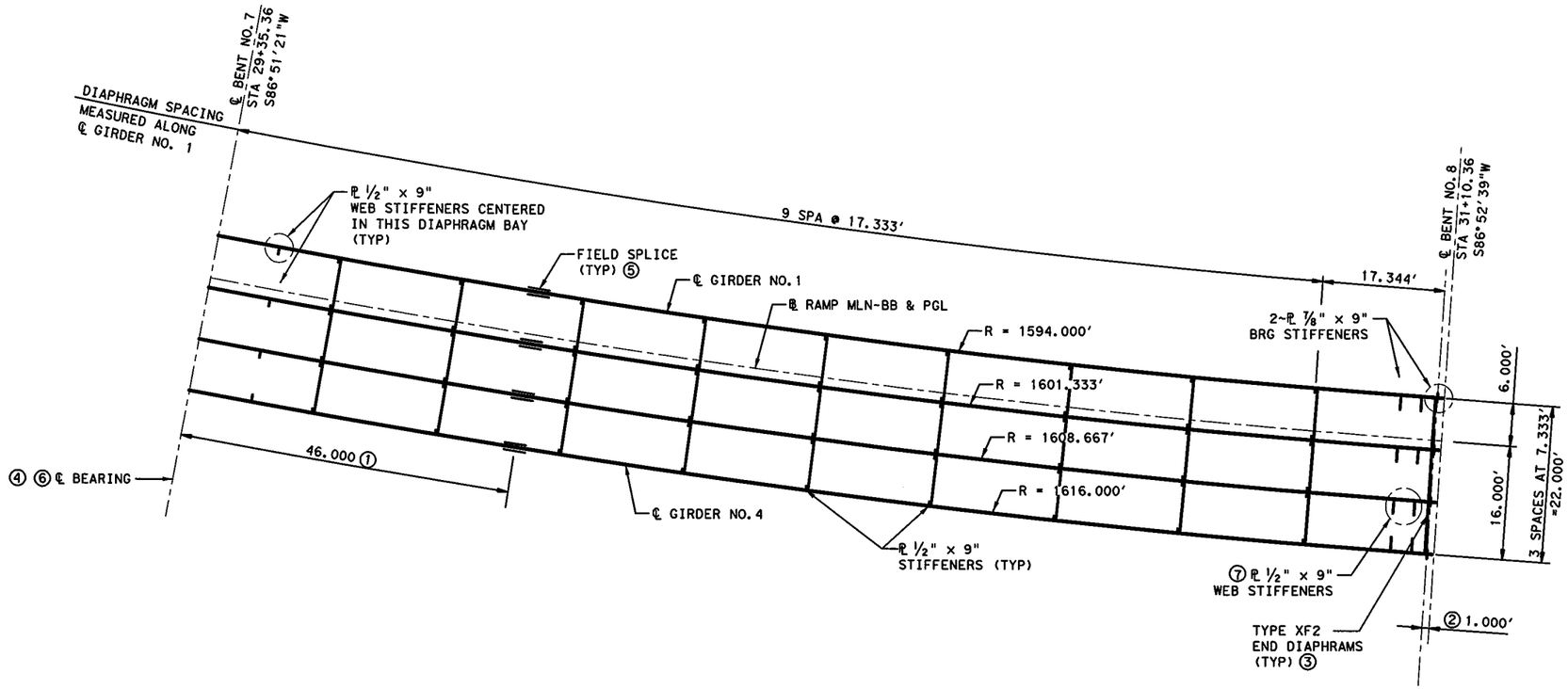

FRAMING PLAN SPAN 7

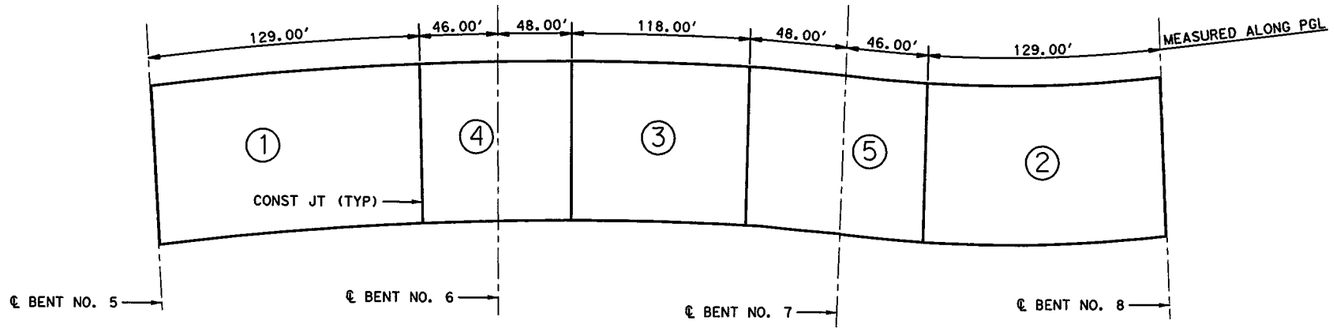

CONCRETE PLACEMENT SEQUENCE

CONTINUOUS PLACEMENT WILL NOT BE PERMITTED

7/11/12

STATE OF TEXAS
CORBETT L. FREEMAN
86913
LICENSED
PROFESSIONAL ENGINEER

HL 93 LOADING

I. S. ENGINEERS, LLC
TBPE REG. # F-11657

Texas Department of Transportation
© 2012

IH 35W FROM NORTH TARRANT PKWY TO IH 820
564.00'
PLATE GIRDER UNIT
NB IH35W EXIT RAMP
FROM MANAGED LANES

SCALE: 1" = 20'
SHEET 3 OF 7

DESIGN	FED.RD. DIV.NO.	FEDERAL AID PROJECT NO.		HIGHWAY NO.
KT	6	(SEE TITLE SHEET)		IH 35W
GRAPHICS	STATE	DISTRICT	COUNTY	SHEET NO.
SPL	TEXAS	FTW	TARRANT	
CHECK	CONTROL	SECTION	JOB	1633
CLF	0014	16	255, ETC.	
CHECK				
KT				

FILENAME: S3BBR#MLN-BB#SG#03.dgn
DRAWING DATE: 7/13/2012

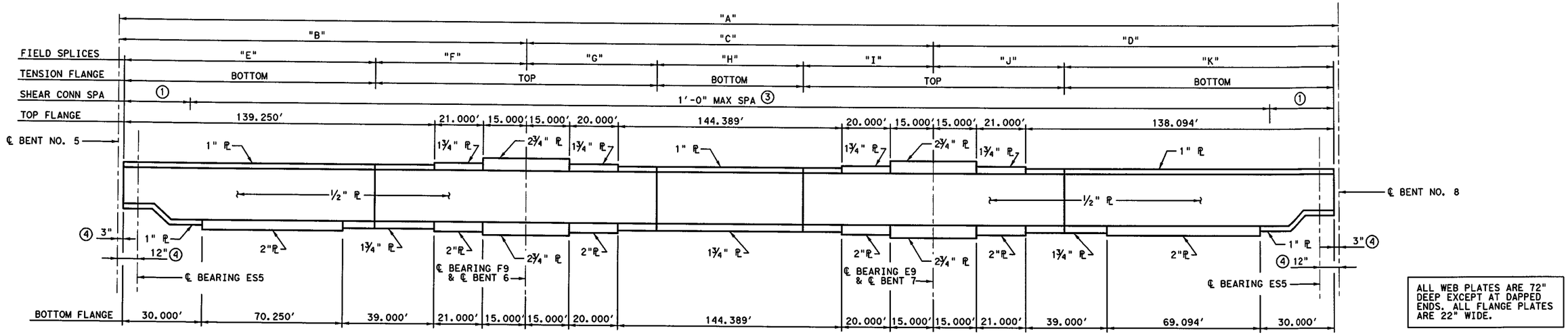

① 4 SPA = 2'-0"
② 6 SPA = 6'-0"
③ NOTE: OMISSION OF STUDS AT OPTIONAL BOLTED SPLICES.
④ MEASURED PERPENDICULAR TO ℄ BENT.

ALL WEB PLATES ARE 72" DEEP EXCEPT AT DAPPED ENDS. ALL FLANGE PLATES ARE 22" WIDE.

ELEVATION ~ GIRDER NO. 1

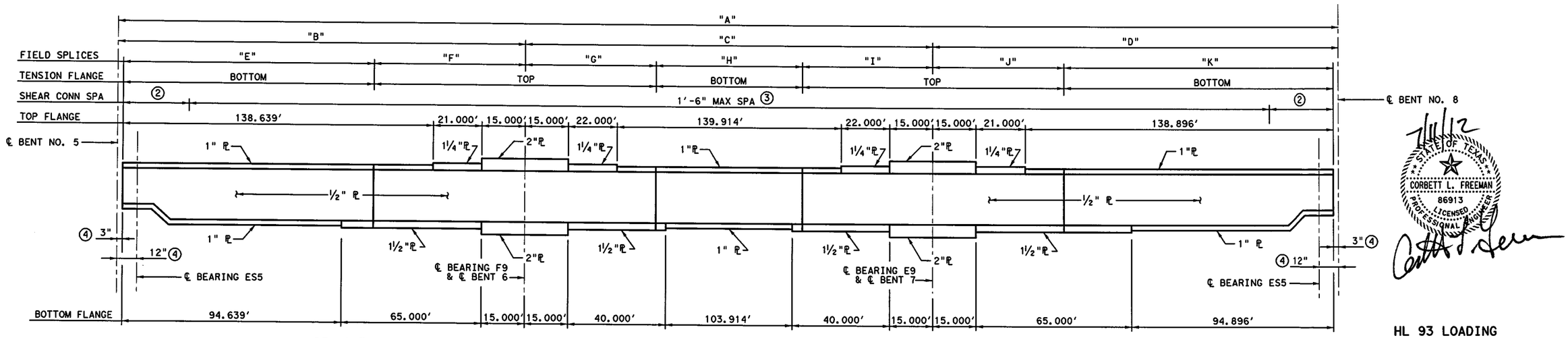

ELEVATION ~ GIRDER NO. 2

TABLE OF GIRDER DIMENSIONS

GIRDER NO.	"A"	"B"	"C"	"D"	"E"	"F"	"G"	"H"	"I"	"J"	"K"
1	564.233'	175.500'	214.389'	174.344'	129.119'	46.131'	48.137'	118.323'	47.929'	45.828'	128.266'
2	563.948'	174.889'	213.913'	175.146'	128.668'	45.971'	47.970'	117.928'	48.016'	46.038'	128.858'
3	563.664'	174.278'	213.438'	175.948'	128.218'	45.810'	47.802'	117.533'	48.103'	46.249'	129.449'
4	563.380'	173.667'	212.963'	176.750'	127.767'	45.650'	47.634'	117.138'	48.191'	46.460'	130.040'

7/11/12
STATE OF TEXAS
CORBETT L. FREEMAN
86913
LICENSED
PROFESSIONAL ENGINEER

HL 93 LOADING

I. S. ENGINEERS, LLC
TBPE REG. # F-11657

Texas Department of Transportation
© 2012

IH 35W FROM NORTH TARRANT PKWY TO IH 820
564.00'
PLATE GIRDER UNIT
NB IH35W EXIT RAMP
FROM MANAGED LANES

SCALE: NTS
SHEET 4 OF 7

DESIGN	FED.RD. DIV.NO.	FEDERAL AID PROJECT NO.		HIGHWAY NO.
KT	6	(SEE TITLE SHEET)		IH 35W
GRAPHICS SPL	STATE	DISTRICT	COUNTY	SHEET NO.
CHECK CLF	TEXAS	FTW	TARRANT	
CHECK KT	CONTROL	SECTION	JOB	1634
	0014	16	255, ETC.	

FILENAME: S3BBR*MLN-BB*SG*04.dgn
DRAWING DATE: 7/13/2012

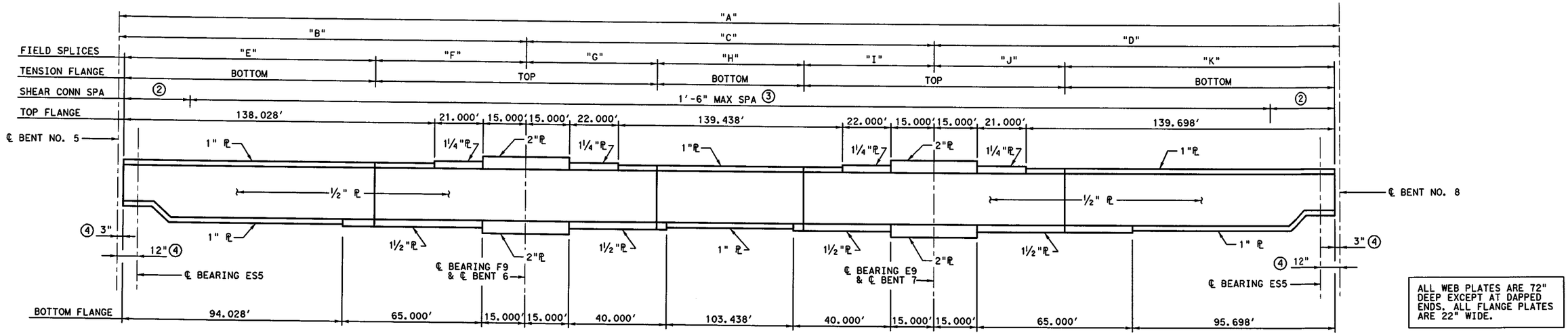

ALL WEB PLATES ARE 72" DEEP EXCEPT AT DAPPED ENDS. ALL FLANGE PLATES ARE 22" WIDE.

① 4 SPA = 2'-0"
② 6 SPA = 2'-0"
③ NOTE: OMISSION OF STUDS AT OPTIONAL BOLTED SPLICES.
④ MEASURED PERPENDICULAR TO ℄ BENT.

ELEVATION ~ GIRDER NO. 3

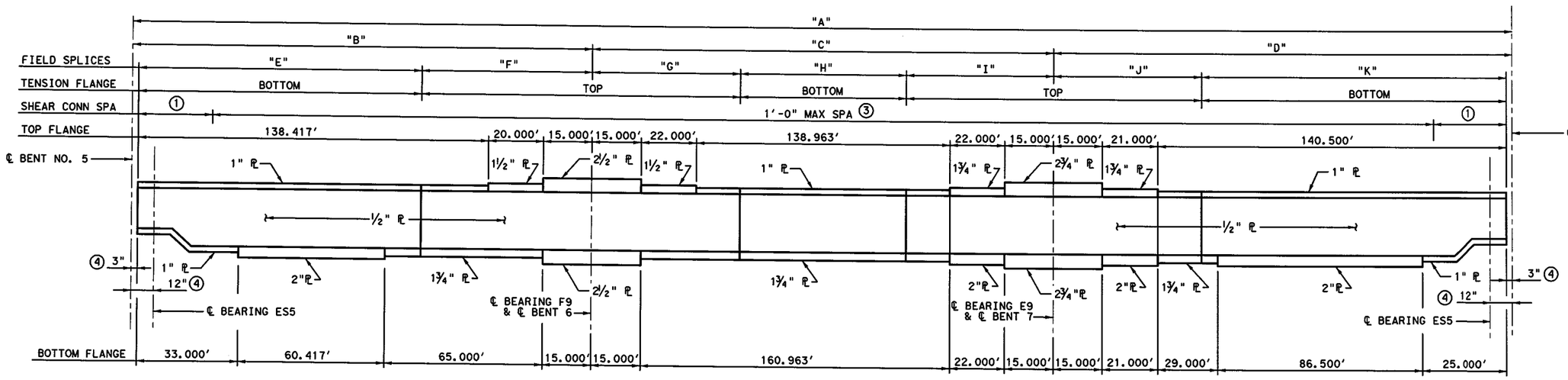

ELEVATION ~ GIRDER NO. 4

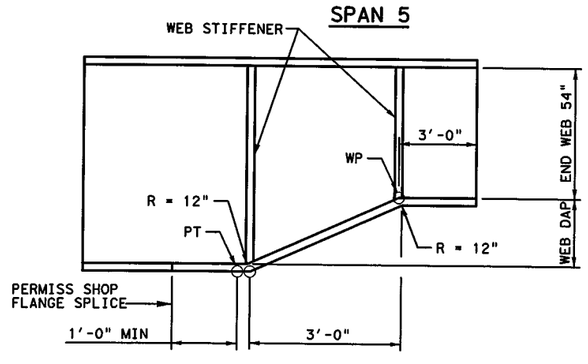

DAPPED END DETAIL

HL 93 LOADING

I. S. ENGINEERS, LLC
TBPE REG. # F-11657

Texas Department of Transportation
© 2012

IH 35W FROM NORTH TARRANT PKWY TO IH 820
564.00'
PLATE GIRDER UNIT
NB IH35W EXIT RAMP
FROM MANAGED LANES

SCALE: NTS — SHEET 5 OF 7

DESIGN	FED.RD. DIV.NO.	FEDERAL AID PROJECT NO.		HIGHWAY NO.
KT	6	(SEE TITLE SHEET)		IH 35W
GRAPHICS AXD	STATE	DISTRICT	COUNTY	SHEET NO.
CHECK CLF	TEXAS	FTW	TARRANT	
CHECK KT	CONTROL	SECTION	JOB	1635
	0014	16	255, ETC.	

STATE OF TEXAS
CORBETT L. FREEMAN
86913
LICENSED
PROFESSIONAL ENGINEER

DRAWING DATE: 7/13/2012 FILENAME: S3BBR*MLN-BB*SG*05.dgn

GIRDER	A	WEIGHT (LBS)
1	1¼"	1,415
2	1"	1,285
3	1"	1,285
4	1¼"	1,415

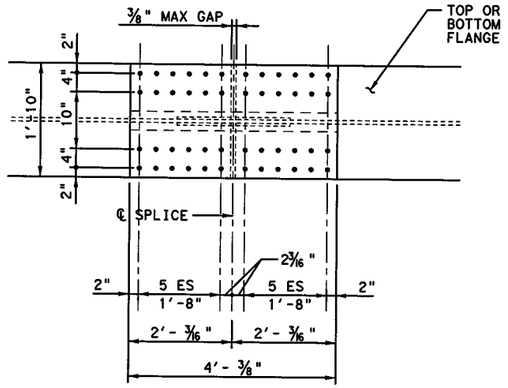

PLAN

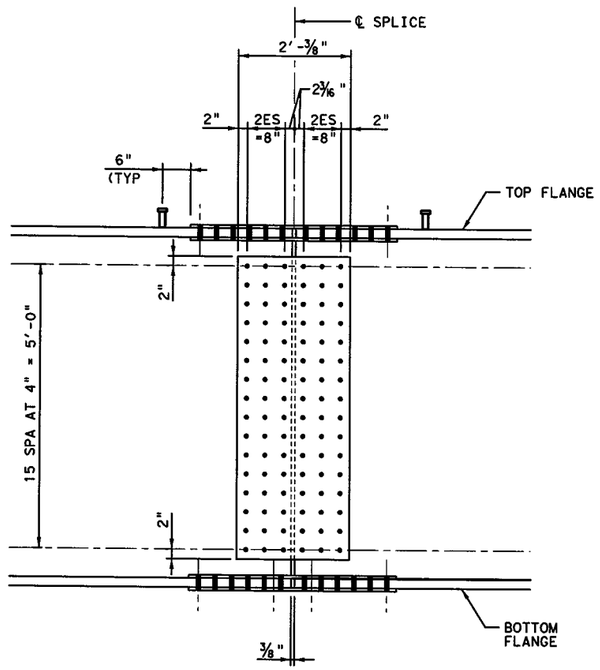

ELEVATION

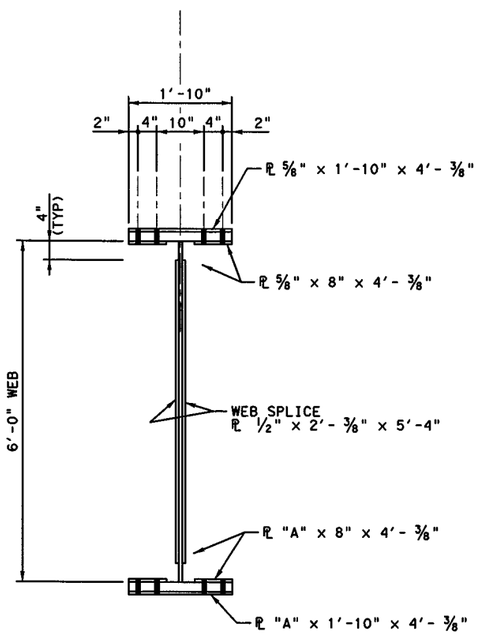

SECTION

BOLTED FIELD SPLICE NOTES:

1. ALL BOLTS SHALL BE 1" DIA A325 TY 1 WITH ONE HARDENED WASHER EACH AND SHALL BE TIGHTENED IN ACCORDANCE WITH ITEM 447. ALL HOLES SHALL BE 1 1⁄16" DIA.
2. ALL SPLICE PLATES SHALL CONFORM TO A709 GRADE 50.
3. ALL SPLICE PLATES ARE CLASSIFIED AS TENSION COMPONENTS AND SHALL CONFORM TO ITEM 442.2.A.1.
4. BOLTS SHALL BE INSTALLED WITH HEADS ON FASCIA SIDE OF WEB FOR GIRDERS NO. 1 AND NO. 4. BOTTOM FLANGE SPLICE BOLTS SHALL BE INSTALLED WITH HEADS FACING DOWN.
5. STRUCTURAL STEEL PAY WEIGHT SHALL BE BASED ON WELDED FIELD SPLICES REGARDLESS OF SPLICE TYPE CHOSEN.
6. CLASS A SURFACE CONDITION WAS ASSUMED IN DESIGN OF FIELD SPLICES (SLIP COEFFICIENT OF 0.33).
7. PREPARE FAYING SURFACES AS PER ITEMS 441, 446, AND 447. ENSURE THE REQUIRED FINISH EXISTS AT THE TIME OF BOLTING. DO NOT WIRE BRUSH UNPAINTED FAYING SURFACES.

7/11/12

STATE OF TEXAS
CORBETT L. FREEMAN
86913
LICENSED
PROFESSIONAL ENGINEER

OPTIONAL BOLTED FIELD SPLICE

HL 93 LOADING

I. S. ENGINEERS, LLC
TBPE REG. # F-11657

Texas Department of Transportation
© 2012

IH 35W FROM NORTH TARRANT PKWY TO IH 820
564.00'
PLATE GIRDER UNIT
NB IH35W EXIT RAMP
FROM MANAGED LANES

SCALE: NTS — SHEET 6 OF 7

DESIGN	FED.RD. DIV.NO.	FEDERAL AID PROJECT NO.		HIGHWAY NO.
KT	6	(SEE TITLE SHEET)		IH 35W
GRAPHICS AXD	STATE	DISTRICT	COUNTY	SHEET NO.
CHECK CLF	TEXAS	FTW	TARRANT	
CHECK KT	CONTROL 0014	SECTION 16	JOB 255, ETC.	1636

FILENAME: S3BBR#ML N-BB#SG#06. dgn
DRAWING DATE: 7/13/2012

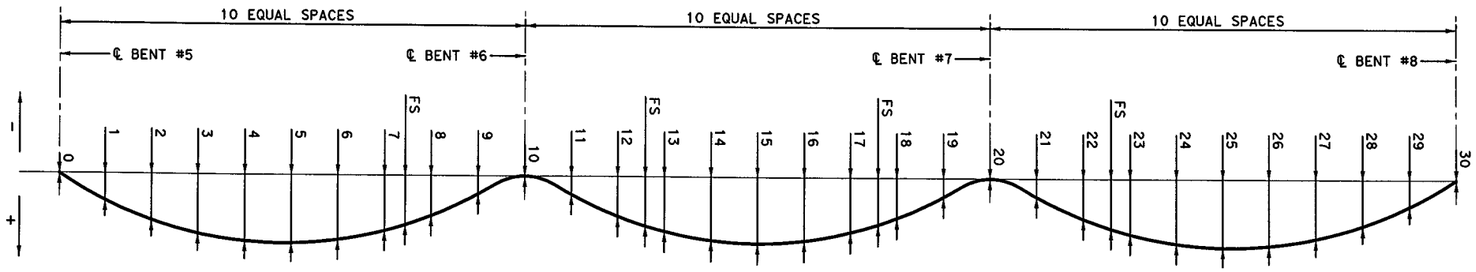

DEAD LOAD DEFLECTION DIAGRAM

FS = FIELD SPLICE

FS = FIELD SPLICE

TABLE OF DEAD LOAD DEFLECTIONS

DUE TO CAST-IN-PLACE CONCRETE (FT)

	LOCATION	GIRDER NO. 1	2	3	4
SPAN NO. 5	℄ BRG	0.000′	0.000′	0.000′	0.000′
	1	0.095′	0.089′	0.084′	0.080′
	2	0.171′	0.163′	0.154′	0.145′
	3	0.221′	0.211′	0.199′	0.187′
	4	0.240′	0.229′	0.217′	0.204′
	5	0.226′	0.216′	0.206′	0.194′
	6	0.186′	0.178′	0.170′	0.162′
	7	0.128′	0.124′	0.119′	0.114′
	FS	0.105′	0.103′	0.099′	0.095′
	8	0.067′	0.066′	0.064′	0.062′
	9	0.020′	0.020′	0.020′	0.019′
	℄ BRG	0.000′	0.000′	0.000′	0.000′
SPAN NO. 6	11	0.018′	0.017′	0.016′	0.014′
	12	0.073′	0.069′	0.065′	0.060′
	FS	0.089′	0.084′	0.079′	0.072′
	13	0.142′	0.133′	0.124′	0.113′
	14	0.197′	0.183′	0.168′	0.152′
	15	0.220′	0.202′	0.183′	0.163′
	16	0.209′	0.184′	0.164′	0.143′
	17	0.154′	0.136′	0.117′	0.098′
	FS	0.101′	0.088′	0.073′	0.057′
	18	0.085′	0.072′	0.058′	0.043′
	19	0.026′	0.019′	0.012′	0.004′
	℄ BRG	0.000′	0.000′	0.000′	0.000′
SPAN NO. 7	21	0.011′	0.018′	0.025′	0.031′
	22	0.075′	0.060′	0.075′	0.088′
	FS	0.045′	0.095′	0.114′	0.131′
	23	0.093′	0.114′	0.136′	0.156′
	24	0.138′	0.165′	0.192′	0.219′
	25	0.171′	0.202′	0.232′	0.262′
	26	0.182′	0.214′	0.244′	0.273′
	27	0.169′	0.197′	0.224′	0.250′
	28	0.132′	0.152′	0.172′	0.192′
	29	0.073′	0.083′	0.094′	0.106′
	℄ BRG	0.000′	0.000′	0.000′	0.000′

TOTAL INCLUDING STEEL (FT)

	LOCATION	GIRDER NO. 1	2	3	4
SPAN NO. 5	℄ BRG	0.000′	0.000′	0.000′	0.000′
	1	0.146′	0.137′	0.129′	0.123′
	2	0.264′	0.250′	0.236′	0.222′
	3	0.341′	0.324′	0.307′	0.287′
	4	0.370′	0.353′	0.334′	0.313′
	5	0.350′	0.334′	0.317′	0.299′
	6	0.288′	0.275′	0.263′	0.250′
	7	0.199′	0.192′	0.184′	0.176′
	FS	0.165′	0.160′	0.154′	0.147′
	8	0.105′	0.103′	0.100′	0.096′
	9	0.032′	0.032′	0.032′	0.030′
	℄ BRG	0.000′	0.000′	0.000′	0.000′
SPAN NO. 6	11	0.027′	0.026′	0.024′	0.022′
	12	0.112′	0.106′	0.100′	0.092′
	FS	0.137′	0.130′	0.121′	0.111′
	13	0.218′	0.204′	0.189′	0.174′
	14	0.302′	0.280′	0.257′	0.233′
	15	0.337′	0.309′	0.280′	0.250′
	16	0.321′	0.282′	0.251′	0.219′
	17	0.236′	0.208′	0.180′	0.151′
	FS	0.156′	0.135′	0.112′	0.088′
	18	0.131′	0.111′	0.090′	0.067′
	19	0.040′	0.029′	0.018′	0.006′
	℄ BRG	0.000′	0.000′	0.000′	0.000′
SPAN NO. 7	21	0.017′	0.028′	0.039′	0.049′
	22	0.118′	0.095′	0.116′	0.137′
	FS	0.072′	0.148′	0.177′	0.204′
	23	0.145′	0.178′	0.211′	0.243′
	24	0.215′	0.256′	0.298′	0.339′
	25	0.264′	0.312′	0.358′	0.404′
	26	0.282′	0.330′	0.376′	0.422′
	27	0.261′	0.304′	0.345′	0.385′
	28	0.203′	0.234′	0.265′	0.295′
	29	0.113′	0.128′	0.145′	0.162′
	℄ BRG	0.000′	0.000′	0.000′	0.000′

CAMBER DIAGRAM TABLE

"Y" VALUES IN FEET

	LOCATION	GIRDER NO. 1	2	3	4
SPAN NO. 5	℄ BRG	0.000′	0.000′	0.000′	0.000′
	1	0.364′	0.355′	0.348′	0.341′
	2	0.664′	0.650′	0.636′	0.622′
	3	0.887′	0.870′	0.852′	0.833′
	4	1.026′	1.008′	0.989′	0.969′
	5	1.079′	1.063′	1.046′	1.028′
	6	1.055′	1.042′	1.029′	1.017′
	7	0.967′	0.960′	0.953′	0.944′
	FS	0.924′	0.919′	0.914′	0.907′
	8	0.839′	0.837′	0.834′	0.829′
	9	0.695′	0.695′	0.694′	0.693′
	℄ BRG	0.556′	0.556′	0.556′	0.556′
SPAN NO. 6	11	0.403′	0.402′	0.401′	0.398′
	12	0.254′	0.249′	0.242′	0.234′
	FS	0.215′	0.207′	0.198′	0.189′
	13	0.042′	0.066′	0.089′	0.112′
	14	-0.261′	-0.189′	-0.118′	-0.048′
	15	-0.668′	-0.546′	-0.425′	-0.304′
	16	-1.179′	-1.012′	-0.836′	-0.662′
	17	-1.813′	-1.579′	-1.345′	-1.112′
	FS	-2.345′	-2.062′	-1.780′	-1.500′
	18	-2.522′	-2.224′	-1.927′	-1.632′
	19	-3.270′	-2.907′	-2.544′	-2.182′
	℄ BRG	-4.022′	-3.592′	-3.161′	-2.731′
SPAN NO. 7	21	-4.770′	-4.273′	-3.776′	-3.280′
	22	-5.489′	-4.970′	-4.406′	-3.844′
	FS	-5.662′	-5.036′	-4.456′	-3.878′
	23	-6.336′	-5.704′	-5.073′	-4.443′
	24	-7.193′	-6.497′	-5.802′	-5.106′
	25	-8.090′	-7.375′	-6.661′	-5.948′
	26	-9.062′	-8.347′	-7.633′	-6.920′
	27	-10.126′	-9.416′	-8.708′	-8.000′
	28	-11.254′	-10.556′	-9.857′	-9.160′
	29	-12.414′	-11.731′	-11.048′	-10.363′
	℄ BRG	-11.647′	-10.980′	-10.312′	-9.645′

BAR TABLE

BAR	SIZE
A	#5
B	#5
D	#5
E	#6
G	#5
H	#5
J	#5
M	#5
T	#4

TABLE OF ESTIMATED QUANTITIES

SPAN	REINFORCED CONCRETE SLAB	REINFORCING STEEL ①	CLASS "S" CONCRETE	STRUCTURAL STEEL (PL GIRDER)
NO.	SF	LB	CY	LB
5	4,888	34,218	136.8	
6	5,983	41,880	166.7	
7	4,916	34,407	137.5	
TOTAL	15,787	110,505	441.0	831,700

① REINFORCING STEEL WEIGHT IS CALCULATED USING AN APPROXIMATE FACTOR OF 7.0 LBS PER SQ FT.

GIRDER SLOPE TABLE (FT/FT)

LOCATION	GIRDER NO. 1	2	3	4
℄ BRG BENT NO. 5	0.010	0.014	0.023	0.000
℄ BRG BENT NO. 6	-0.007	-0.007	-0.007	-0.007
℄ BRG BENT NO. 7	-0.035	-0.032	-0.029	-0.026
℄ BRG BENT NO. 8	-0.081	-0.046	-0.065	-0.050

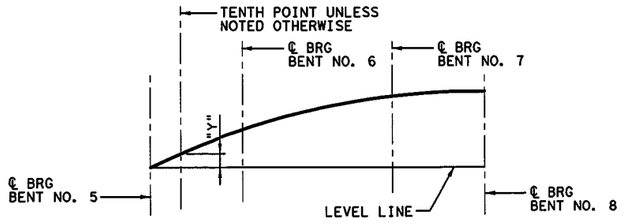

WEB CAMBER DIAGRAM

WEBS MAY BE CUT ON STRAIGHT LINES BETWEEN ORDINATES SHOWN OR TO A SMOOTH CURVE AT THE FABRICATOR' OPTION. ORDINATES SHOWN INCLUDE TOTAL DEAD LOAD DEFLECTION AND VERTICAL CURVE CORRECTIONS.

7/11/12

STATE OF TEXAS
CORBETT L. FREEMAN
86913
LICENSED
PROFESSIONAL ENGINEER

HL 93 LOADING

PLATE GIRDER FABRICATION NOTES:

1. ALL STRUCTURAL STEEL INCLUDING STIFFENERS AND DIAPHRAGMS SHALL CONFORM TO ASTM A709 GR. 50 AND SHALL BE PAID FOR AT THE UNIT PRICE BID FOR STRUCTURAL STEEL (PLATE GIRDER). ALL STRUCTURAL STEEL SHALL BE PAINTED. PAINT SYSTEM FOR STEEL GIRDERS SHALL BE PROTECTION SYSTEM II. THIS SYSTEM SHALL CONFORM TO TXDOT STANDARD SPECIFICATION ITEM 446.
2. GIRDER TENSION FLANGES AND WEBS ARE CLASSIFIED AS TENSION COMPONENTS AND SHALL CONFROM TO ITEM 442.2.A.1.
3. ALL DIMENSIONS SHOWN IN GIRDER ELEVATIONS ARE HORIZONTAL ARCH DIMENSIONS.
4. EXCEPT AT CHANGES IN SECTION, SHOP OR FIELD FLANGE AND WEB SPLICES IN PLATE GIRDERS MAY BE LOCATED AS DESIRABLE TO OPTIMIZE PLATE LENGTHS AND ERECTION PROCEDURES, EXCEPT THAT SPLICES WILL NOT BE ALLOWED WHERE A 40FT OR LESS UNSPLICED LENGTH WOULD SUFFICE; NEITHER WILL TENSION FLANGE SPLICES BE ALLOWED WITHIN 0.05S EITHER SIDE OF INTERIOR BEARINGS, WITHIN 0.10S EITHER SIDE OF THE CENTERLINES OF INTERIOR SPANS, NOR WITHIN THE RANGE BETWEEN 0.30S AND 0.50S FROM THE END BEARINGS (S = LENGTH C.C. BEARING OF SPAN IN WHICH THE SPLICE IS MADE).
5. SHOP FLANGE AND WEB SPLICES SHALL BE MADE BY FULL PENETRATION GROOVE WELDS IN ACCORDANCE WITH THE ITEM "STEEL STRUCTURES".

I. S. ENGINEERS, LLC
TBPE REG. # F-11657

Texas Department of Transportation
© 2012

IH 35W FROM NORTH TARRANT PKWY TO IH 820
564.00′
PLATE GIRDER UNIT
NB IH35W EXIT RAMP
FROM MANAGED LANES

SCALE: NTS — SHEET 7 OF 7

DESIGN	FED. RD. DIV. NO.	FEDERAL AID PROJECT NO.		HIGHWAY NO.
KT	6	(SEE TITLE SHEET)		IH 35W
GRAPHICS: CLF	STATE	DISTRICT	COUNTY	SHEET NO.
CHECK: KT	TEXAS	FTW	TARRANT	1637
CHECK: CLF	CONTROL	SECTION	JOB	
	0014	16	255, ETC.	

FILENAME: S3BBR*MLN-BB*SG*07.dgn
DRAWING DATE: 7/13/2012

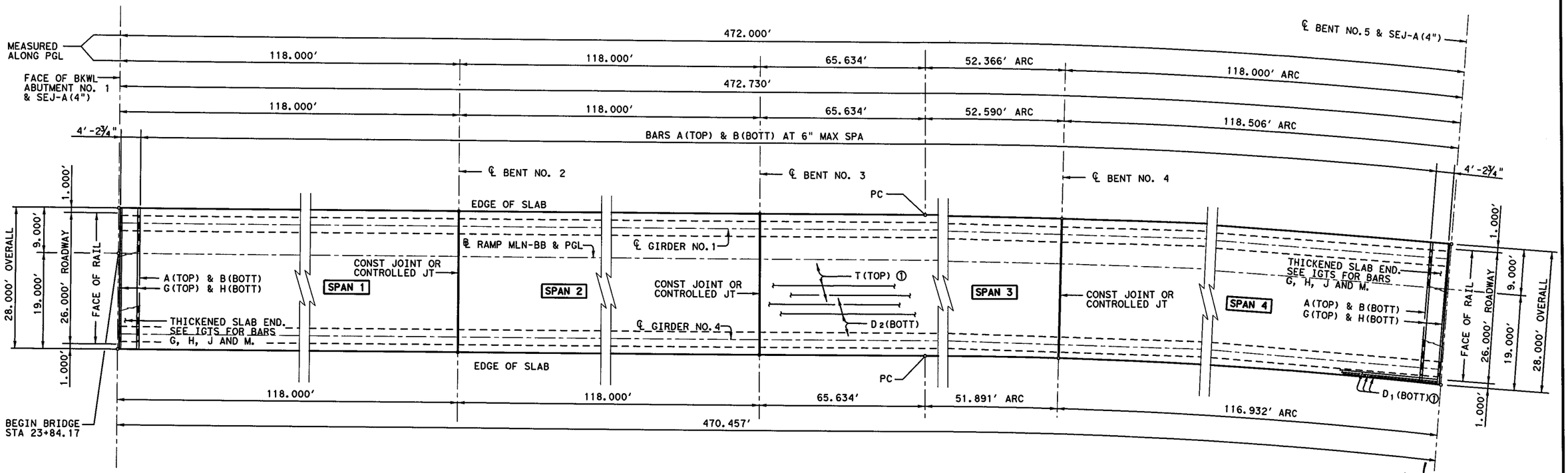

① 2" END COVER ON BARS D1 AND T

PLAN

HL 93 LOADING

I. S. ENGINEERS, LLC
TBPE REG. # F-11657

Texas Department of Transportation
© 2012

IH 35W FROM NORTH TARRANT PKWY TO IH 820

472.00' PRESTRESSED CONCRETE I-GIRDER UNIT

NB IH35W EXIT RAMP FROM MANAGED LANES

SCALE: NTS

SHEET 1 OF 2

DESIGN	FED.RD. DIV.NO.	FEDERAL AID PROJECT NO.		HIGHWAY NO.
CLF	6	(SEE TITLE SHEET)		IH 35W
GRAPHICS AXD	STATE	DISTRICT	COUNTY	SHEET NO.
CHECK SB	TEXAS	FTW	TARRANT	
CHECK CLF	CONTROL	SECTION	JOB	1638
	0014	16	255, ETC.	

7/11/12

STATE OF TEXAS
CORBETT L. FREEMAN
86913
LICENSED
PROFESSIONAL ENGINEER

DRAWING DATE: 7/13/2012 FILENAME: S38BR*MLN-BB*PB*01.dgn

TYPE Tx54 GIRDERS

SPAN NO.	GIRDER NO.	"A" FT	"B" FT
1	ALL	0.124	0.176
2	ALL	0.124	0.176
3	ALL	0.124	0.176
4	ALL	0.124	0.176

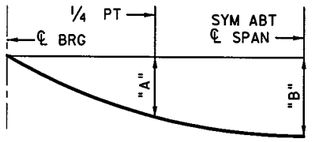

DEAD LOAD DEFLECTION DIAGRAM

CALCULATED DEFLECTIONS SHOWN ARE DUE TO THE CONCRETE SLAB ON INTERIOR GIRDERS ONLY (EC = 5000 KSI). ADJUST VALUES AS REQUIRED FOR EXTERIOR GIRDERS AND IF OPTIONAL SLAB FORMING IS USED. THESE VALUES MAY REQUIRE FIELD VERIFICATION.

TABLE OF SECTION DEPTHS

SPAN NO.	GIRDER NO.	"X" AT ℄ BRG	"Y" AT ℄ BRG	"Z" AT ℄ SPAN ②
1	ALL	12½"	5'-6½"	9⅜"
2	1	11½"	5'-5½"	9⅞"
2	2-4	11½"	5'-5½"	11½"
3	1-3	11½"	5'-5½"	11⅛"
3	4	11½"	5'-5½"	10⅞"
4	1-3	11½"	5'-5½"	12⅛"
4	4	11½"	5'-5½"	11½"

② THEORETICAL DIMENSION

BAR TABLE

BAR	SIZE
A	#5
B	#5
D	#5
G	#5
H	#5
J	#5
M	#5
T	#4

TABLE OF ESTIMATED QUANTITIES

SPAN	REINF CONCRETE SLAB	PRESTR CONC I-GIRDERS (Tx54) ④	CLASS "S" CONCRETE	TOTAL REINF STEEL ③
NO.	SF	LF	CY	LB
1	3,304	470.16	96.0	21,476
2	3,304	470.24	95.4	21,476
3	3,301	469.70	95.3	21,453
4	3,296	468.91	95.8	21,425
TOTAL	13,205	1,879.01	382.5	85,830

③ REINFORCING STEEL WEIGHT IS CALCULATED USING AN APPROXIMATE FACTOR OF 6.5 LBS/SF.
④ LENGTHS SHOWN ARE BOTTOM OF GIRDER FLANGE LENGTHS WITH ADJUSTMENTS MADE FOR BEAM SLOPE. SEE GIRDER LAYOUT FOR GIRDER LENGTHS.

GENERAL NOTES:

1. DESIGNED ACCORDING TO AASHTO LRFD BRIDGE DESIGN SPECIFICATION, 5TH EDITION (2010).
2. SEE PCP OR PMDF STANDARDS FOR DETAILS AND QUANTITY ADJUSTMENTS IF EITHER OF THESE OPTION ARE USED.
3. SEE IGTS STANDARD FOR THICKENED SLAB END DETAILS.
4. ALL REINFORCING STEEL SHALL BE GRADE 60 AND EPOXY COATED.
5. CLASS "S" (HPC) CONCRETE STRENGTH F'C = 4,000 PSI.
6. BAR LAPS, WHERE REQUIRED, WILL BE AS FOLLOWS: EPOXY COATED #4 = 2'-1"
   #5 = 2'-7"

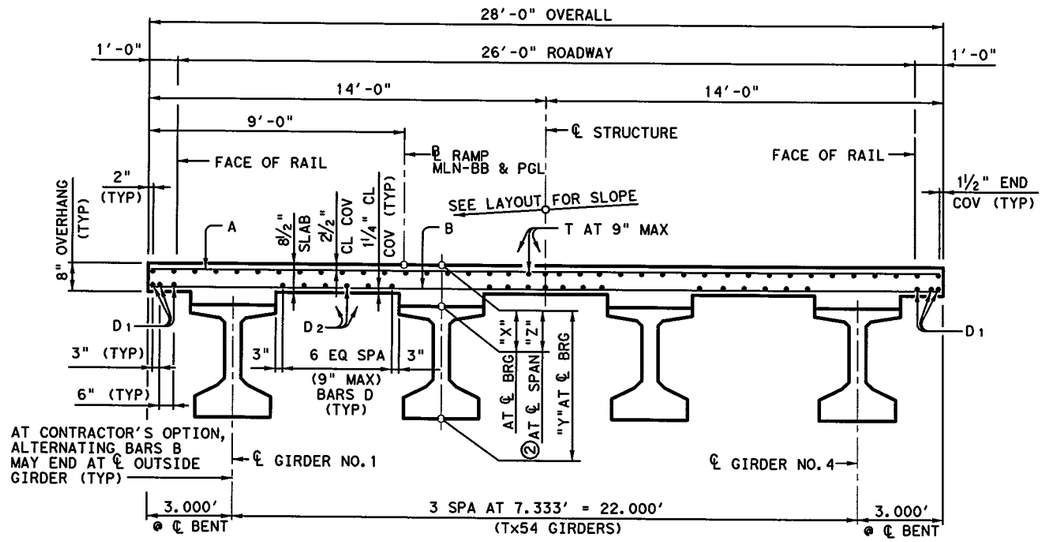

TYPICAL TRANSVERSE SECTION

7/11/12
STATE OF TEXAS
CORBETT L. FREEMAN
86913
LICENSED
PROFESSIONAL ENGINEER

HL 93 LOADING

I. S. ENGINEERS, LLC
TBPE REG. # F-11657

Texas Department of Transportation
© 2012

IH 35W FROM NORTH TARRANT PKWY TO IH 820

472.00' PRESTRESSED CONCRETE I-GIRDER UNIT
NB IH35W EXIT RAMP FROM MANAGED LANES

SCALE: NTS — SHEET 2 OF 2

DESIGN	FED.RD. DIV.NO.	FEDERAL AID PROJECT NO.		HIGHWAY NO.
CLF	6	(SEE TITLE SHEET)		IH 35W
GRAPHICS AXD	STATE	DISTRICT	COUNTY	SHEET NO.
CHECK SB	TEXAS	FTW	TARRANT	
CHECK CLF	CONTROL 0014	SECTION 16	JOB 255, ETC.	1639

FILENAME: S3BBR*MLN-BB*PB*02.dgn
DRAWING DATE: 7/13/2012

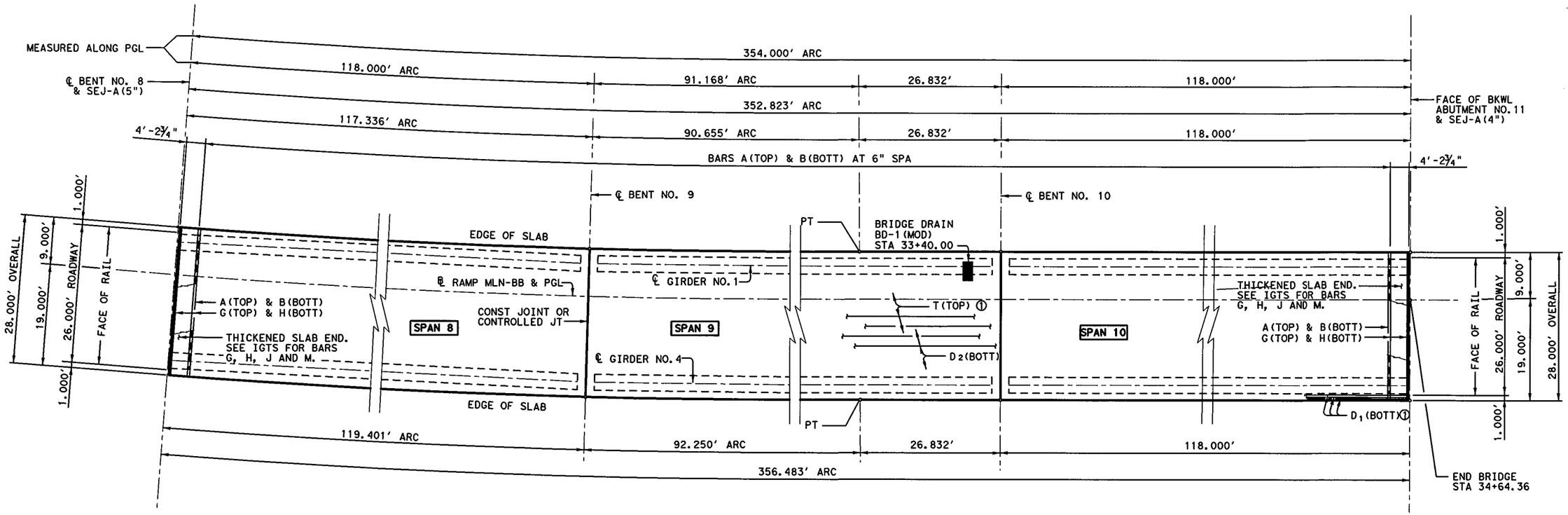

① 2" END COVER ON BARS D1 AND T

PLAN

7/28/12

STATE OF TEXAS
CORBETT L. FREEMAN
86913
LICENSED
PROFESSIONAL ENGINEER

HL 93 LOADING

I. S. ENGINEERS, LLC
TBPE REG. # F-11657

Texas Department of Transportation
© 2012

IH 35W FROM NORTH TARRANT PKWY TO IH 820

354.00' PRESTRESSED CONCRETE I-GIRDER UNIT

NB IH35W EXIT RAMP FROM MANAGED LANES

SCALE: NTS

SHEET 1 OF 2

DESIGN	FED.RD. DIV.NO.	FEDERAL AID PROJECT NO.		HIGHWAY NO.
CLF	6	(SEE TITLE SHEET)		IH 35W
GRAPHICS AXD	STATE	DISTRICT	COUNTY	SHEET NO.
CHECK SB	TEXAS	FTW	TARRANT	1640
CHECK CLF	CONTROL	SECTION	JOB	
	0014	16	255, ETC.	

DRAWING DATE: 7/28/2012 FILENAME: S3BBR*MLN-BB*PB*03.dgn

TYPE Tx54 GIRDERS

SPAN NO.	GIRDER NO.	"A" FT	"B" FT
8	ALL	0.120	0.170
9	ALL	0.111	0.157
10	ALL	0.116	0.165

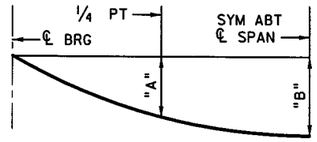

DEAD LOAD DEFLECTION DIAGRAM

CALCULATED DEFLECTIONS SHOWN ARE DUE TO THE CONCRETE SLAB ON INTERIOR GIRDERS ONLY (EC = 5000 KSI). ADJUST VALUES AS REQUIRED FOR EXTERIOR GIRDERS AND IF OPTIONAL SLAB FORMING IS USED. THESE VALUES MAY REQUIRE FIELD VERIFICATION.

TABLE OF SECTION DEPTHS

SPAN NO.	GIRDER NO.	"X" AT ℄ BRG	"Y" AT ℄ BRG	"Z" AT ℄ SPAN ②
8	ALL	11½"	5'-5½"	9¼"
9	1	11½"	5'-5½"	9⅛"
9	2,3	11½"	5'-5½"	9⅞"
9	4	11½"	5'-5½"	10⅝"
10	1	11½"	5'-5½"	10⅞"
10	2,3	11½"	5'-5½"	10⅛"
10	4	11½"	5'-5½"	9½"

② THEORETICAL DIMENSION

BAR TABLE

BAR	SIZE
A	#5
B	#5
D	#5
G	#5
H	#5
J	#5
M	#5
T	#4

TABLE OF ESTIMATED QUANTITIES

SPAN	REINF CONCRETE SLAB	PRESTR CONC I-GIRDERS (Tx54) ④	CLASS "S" CONCRETE	TOTAL REINF STEEL ③
NO.	SF	LF	CY	LB
8	3,305	464.16	95.9	21,483
9	3,303	455.80	95.1	21,471
10	3,304	462.60	95.9	21,476
TOTAL	9,912	1,382.56	286.9	64,430

③ REINFORCING STEEL WEIGHT IS CALCULATED USING AN APPROXIMATE FACTOR OF 6.5 LBS/SF.
④ LENGTHS SHOWN ARE BOTTOM OF GIRDER FLANGE LENGTHS WITH ADJUSTMENTS MADE FOR BEAM SLOPE. SEE GIRDER LAYOUT FOR GIRDER LENGTHS.

GENERAL NOTES:

1. DESIGNED ACCORDING TO AASHTO LRFD BRIDGE DESIGN SPECIFICATION, 5TH EDITION (2010).
2. SEE PCP OR PMDF STANDARDS FOR DETAILS AND QUANTITY ADJUSTMENTS IF EITHER OF THESE OPTION ARE USED.
3. SEE IGTS STANDARD FOR THICKENED SLAB END DETAILS.
4. ALL REINFORCING STEEL SHALL BE GRADE 60 AND EPOXY COATED.
5. CLASS "S"(HPC) CONCRETE STRENGTH F'C = 4,000 PSI.
6. BAR LAPS, WHERE REQUIRED, WILL BE AS FOLLOWS: EPOXY COATED #4 = 2'-1" #5 = 2'-7"

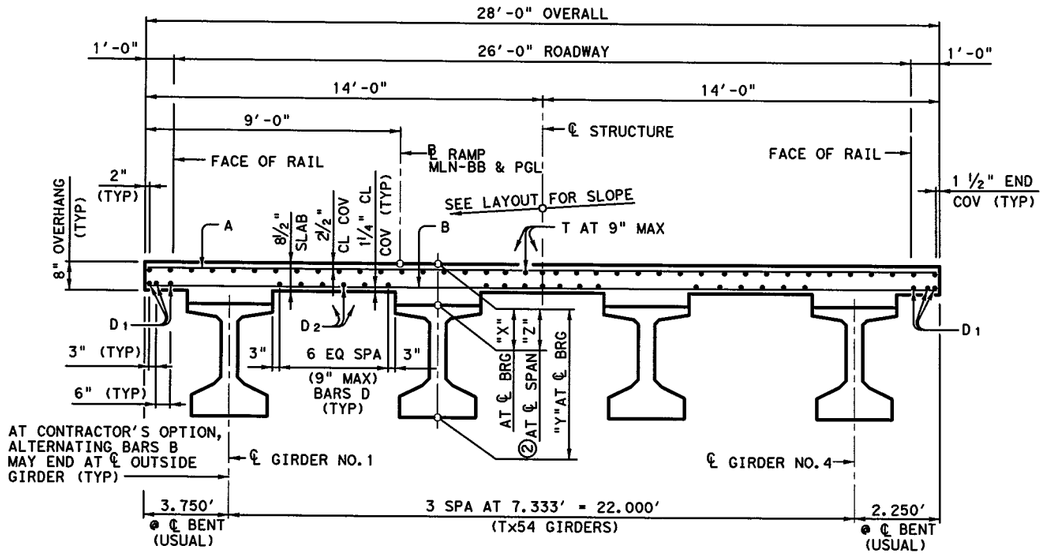

TYPICAL TRANSVERSE SECTION

7/11/12
STATE OF TEXAS
CORBETT L. FREEMAN
86913
LICENSED
PROFESSIONAL ENGINEER

HL 93 LOADING

I. S. ENGINEERS, LLC
TBPE REG. # F-11657

Texas Department of Transportation
© 2012

IH 35W FROM NORTH TARRANT PKWY TO IH 820

354.00' PRESTRESSED CONCRETE I-GIRDER UNIT

NB IH35W EXIT RAMP FROM MANAGED LANES

SCALE: NTS — SHEET 2 OF 2

DESIGN	FED.RD. DIV.NO.	FEDERAL AID PROJECT NO.		HIGHWAY NO.
CLF	6	(SEE TITLE SHEET)		IH 35W
GRAPHICS AXD	STATE	DISTRICT	COUNTY	SHEET NO.
CHECK SB	TEXAS	FTW	TARRANT	
CHECK CLF	CONTROL	SECTION	JOB	1641
	0014	16	255, ETC.	

DRAWING DATE: 7/13/2012 FILENAME: S3BBR*MLN-BB*PB*04.dgn

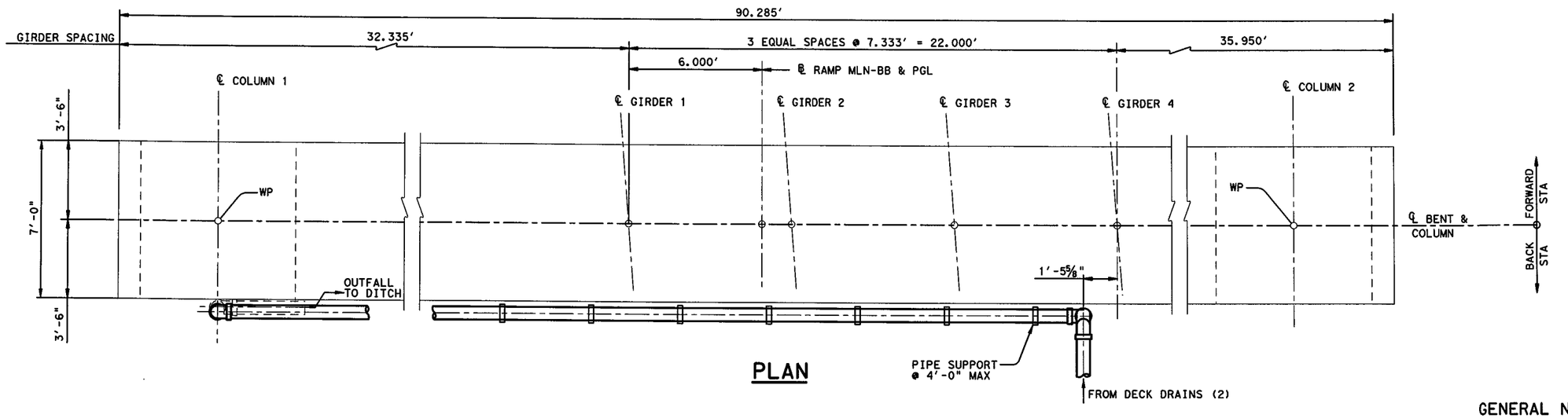

PLAN

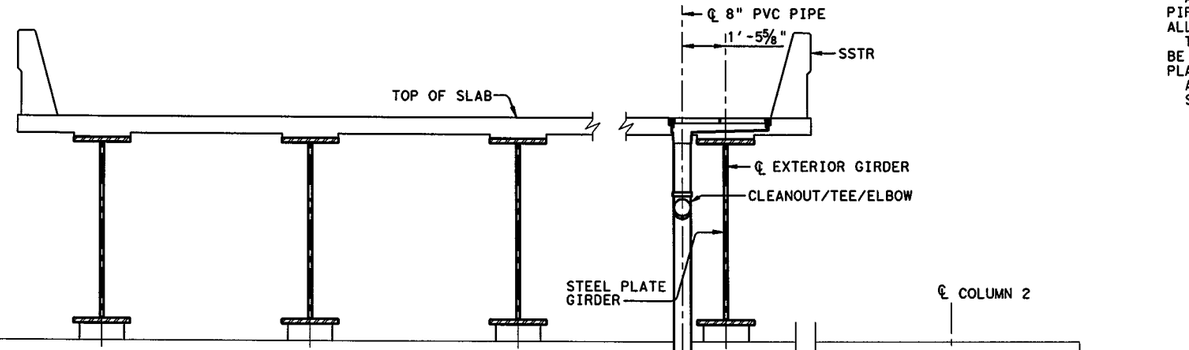

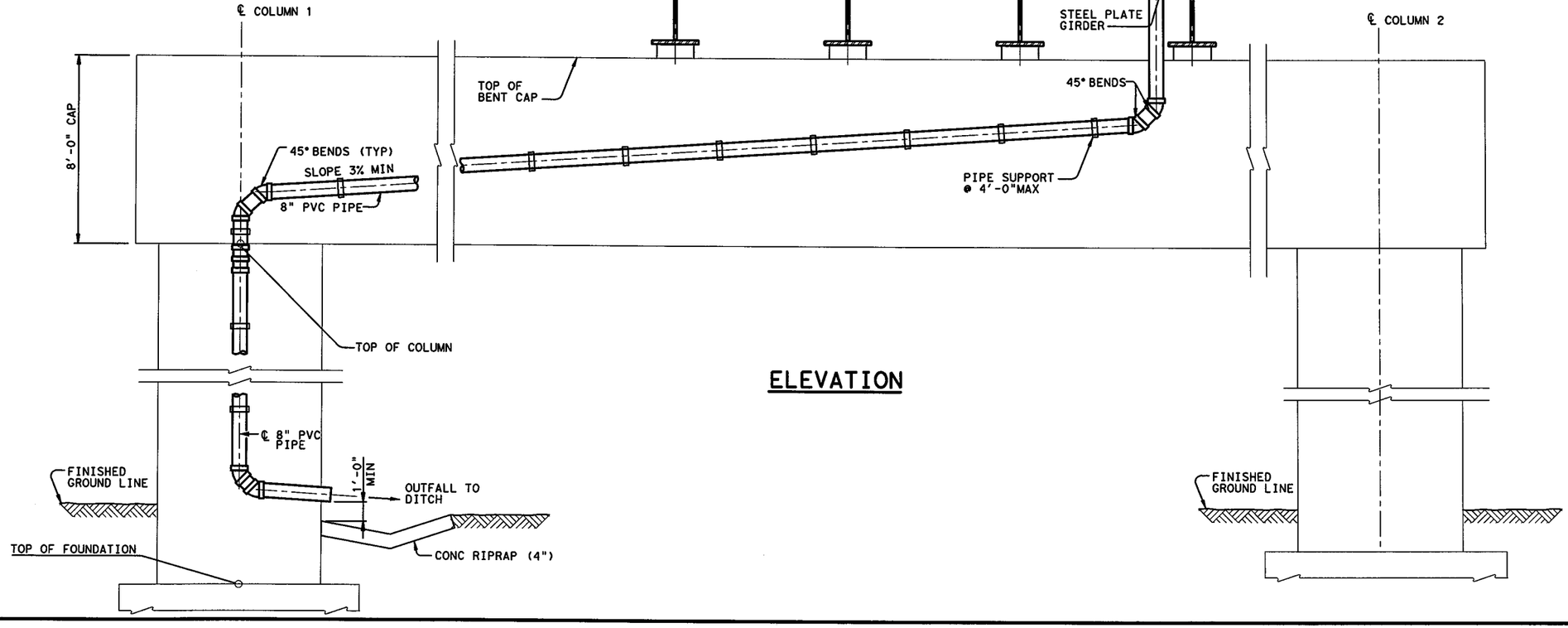

ELEVATION

GENERAL NOTES:

A TEMPORARY PLUG WILL BE PLACED IN ANY OPEN PIPES AND SHALL REMAIN UNTIL GRATE INLET AND ALL PIPING ARE INSTALLED.

THE ENTIRE DRAIN SYSTEM FOR EACH SPAN SHALL BE FULLY CONNECTED AND OPERATIONAL PRIOR TO PLACEMENT OF RAILS ON SPANS.

ALL PIPE BENDS SHALL BE 45° MAXIMUM.

SEE BD-1(MOD) SHEETS FOR DETAILS NOT SHOWN.

7/11/12

STATE OF TEXAS
CORBETT L. FREEMAN
86913
LICENSED
PROFESSIONAL ENGINEER

HL 93 LOADING

I. S. ENGINEERS, LLC
TBPE REG. # F-11657

Texas Department of Transportation
© 2012

IH 35W FROM NORTH TARRANT PKWY TO IH 820

BRIDGE DRAIN DETAILS
NB IH35W EXIT RAMP
FROM MANAGED LANES

SCALE: NTS — SHEET 1 OF 2

DESIGN	FED.RD. DIV.NO.	FEDERAL AID PROJECT NO.		HIGHWAY NO.
CLF	6	(SEE TITLE SHEET)		IH 35W
GRAPHICS AXD	STATE	DISTRICT	COUNTY	SHEET NO.
CHECK BV	TEXAS	FTW	TARRANT	1642
CHECK CLF	CONTROL	SECTION	JOB	
	0014	16	255, ETC.	

FILENAME: S38BR*MLN-BB*DR*01.dgn

DRAWING DATE: 7/13/2012

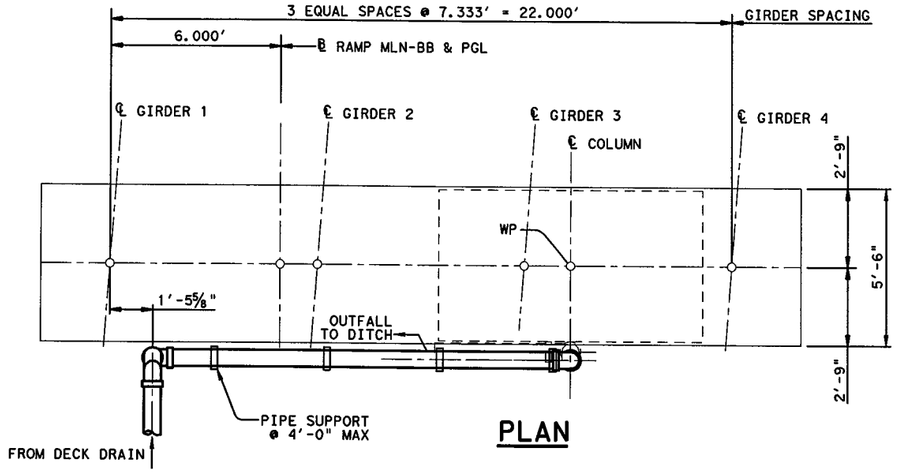

PLAN

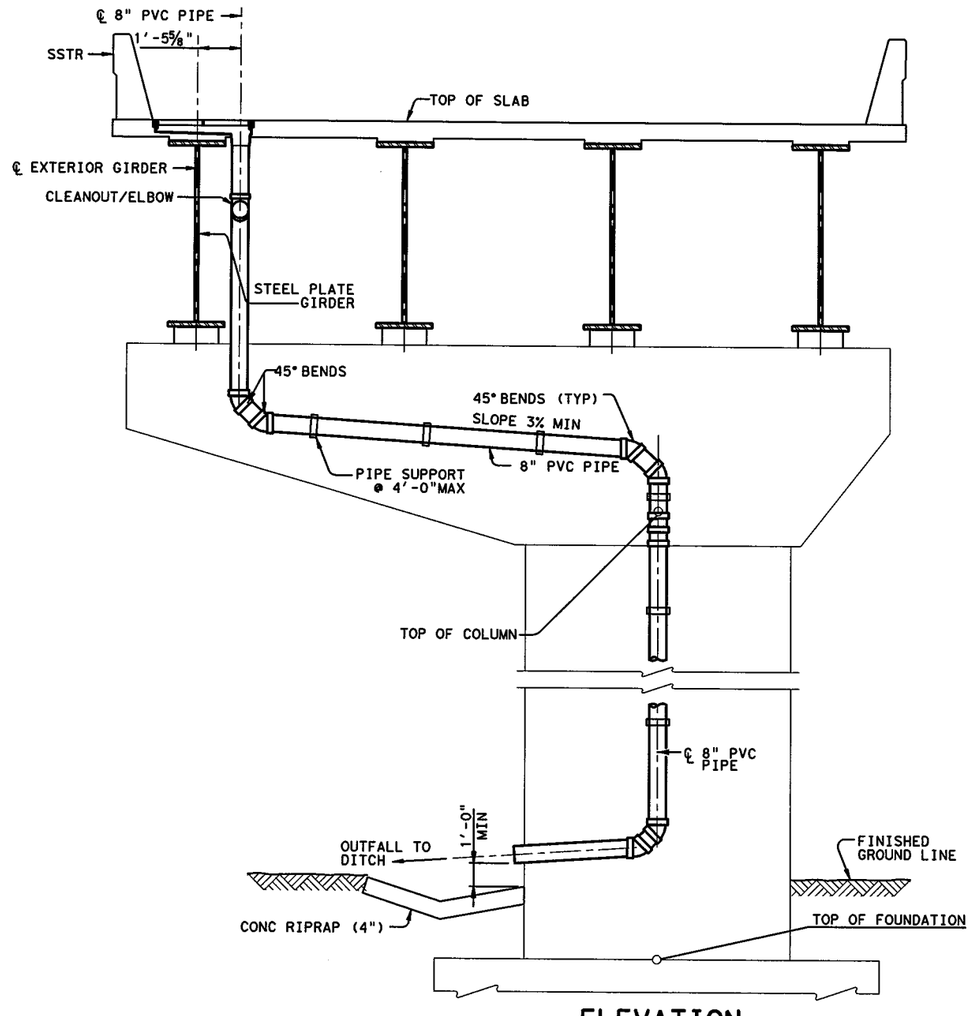

ELEVATION

GENERAL NOTES:

A TEMPORARY PLUG WILL BE PLACED IN ANY OPEN PIPES AND SHALL REMAIN UNTIL GRATE INLET AND ALL PIPING ARE INSTALLED.

THE ENTIRE DRAIN SYSTEM FOR EACH SPAN SHALL BE FULLY CONNECTED AND OPERATIONAL PRIOR TO PLACEMENT OF RAILS ON SPANS.

ALL PIPE BENDS SHALL BE 45° MAXIMUM.

SEE BD-1(MOD) SHEETS FOR DETAILS NOT SHOWN.

7/13/12

STATE OF TEXAS
CORBETT L. FREEMAN
86913
LICENSED PROFESSIONAL ENGINEER

HL 93 LOADING

I. S. ENGINEERS, LLC
TBPE REG. # F-11657

Texas Department of Transportation
© 2012

IH 35W FROM NORTH TARRANT PKWY TO IH 820

BRIDGE DRAIN DETAILS
NB IH35W EXIT RAMP
FROM MANAGED LANES

SCALE: NTS — SHEET 2 OF 3

DESIGN	FED.RD. DIV.NO.	FEDERAL AID PROJECT NO.		HIGHWAY NO.
CLF	6	(SEE TITLE SHEET)		IH 35W
GRAPHICS AXD	STATE	DISTRICT	COUNTY	SHEET NO.
CHECK BV	TEXAS	FTW	TARRANT	1643
CHECK CLF	CONTROL	SECTION	JOB	
	0014	16	255, ETC.	

DRAWING DATE: 7/13/2012 FILENAME: S3BBR*MLN-BB*DR*02.dgn

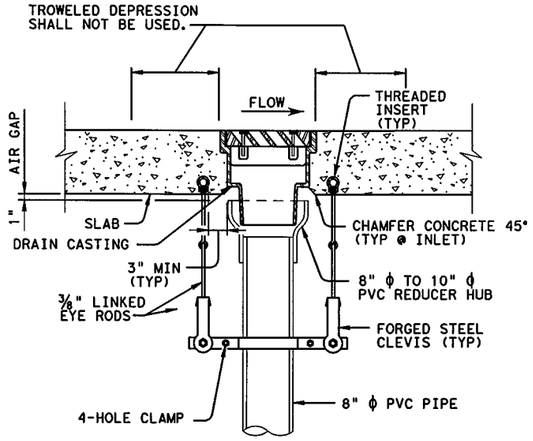

HOOK-UP TO INLET W/VERTICAL PIPE SUPPORT

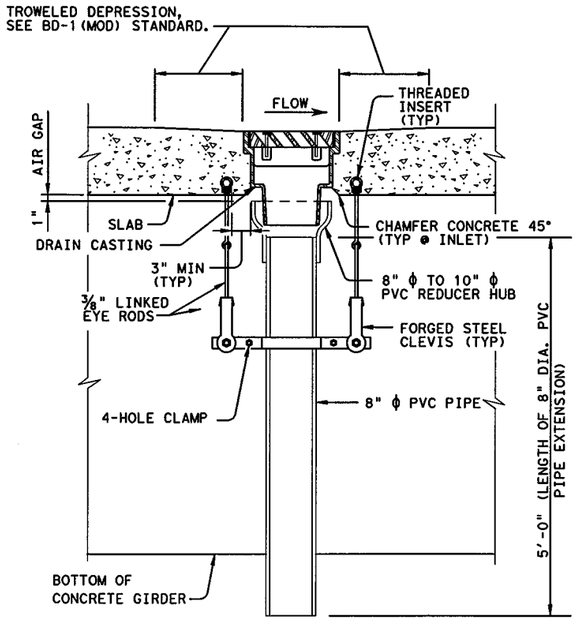

HOOK-UP TO INLET (BENT 10) W/VERTICAL PIPE SUPPORT

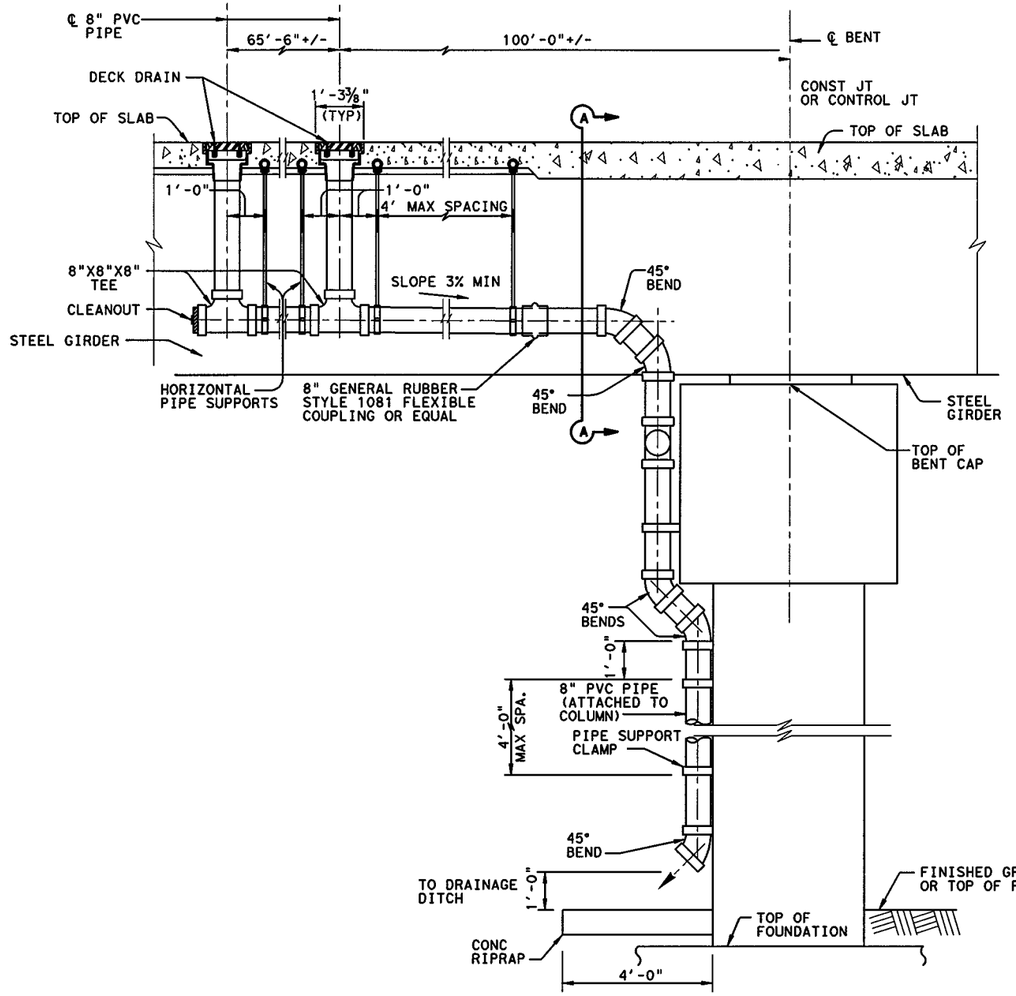

DRAIN PIPING (SHOWING TWO DRAINS) - EXTERNAL ATTACHMENT

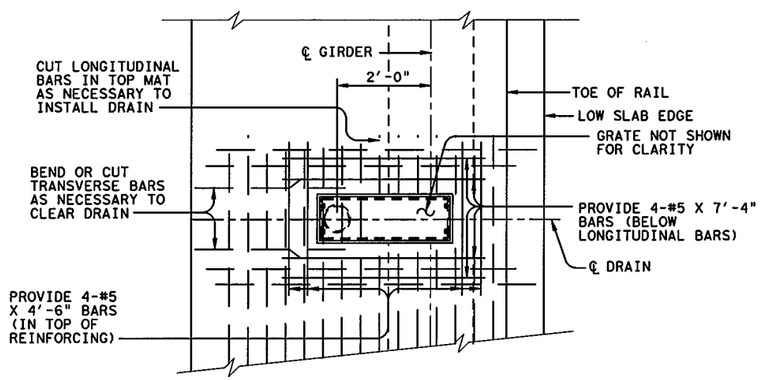

TYPICAL PLAN SHOWING SLAB REINFORCING (CONC. GIRDER)

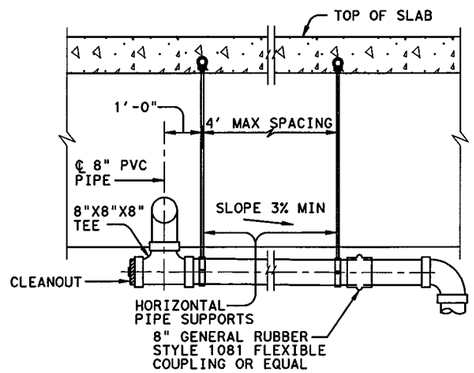

SECTION A-A

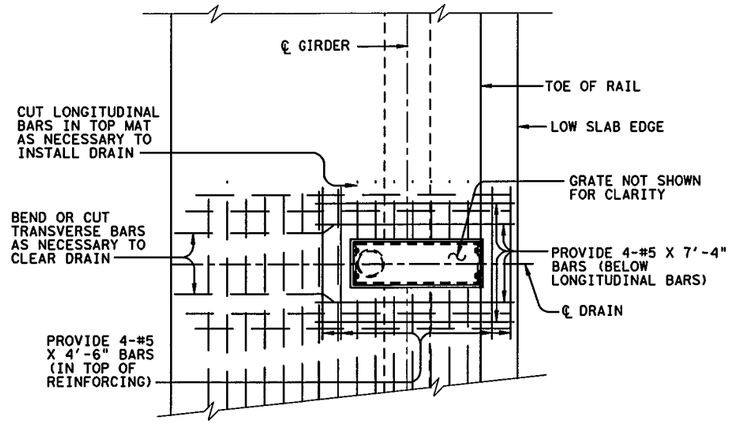

TYPICAL PLAN SHOWING SLAB REINFORCING (STEEL GIRDER)

NOTES:

1. FOR GENERAL NOTES SEE SHEET 1 OF 3.

7/28/12
STATE OF TEXAS
CORBETT L. FREEMAN
86913
LICENSED
PROFESSIONAL ENGINEER

HL 93 LOADING

I. S. ENGINEERS, LLC
TBPE REG. # F-11657

Texas Department of Transportation
© 2012

IH 35W FROM NORTH TARRANT PKWY TO IH 820

BRIDGE DRAIN DETAILS
NB IH35W EXIT RAMP
FROM MANAGED LANES

SCALE: NTS — SHEET 3 OF 3

DESIGN	FED.RD. DIV.NO.	FEDERAL AID PROJECT NO.		HIGHWAY NO.
CLF	6	(SEE TITLE SHEET)		IH 35W
GRAPHICS AXD	STATE	DISTRICT	COUNTY	SHEET NO.
CHECK BV	TEXAS	FTW	TARRANT	1644
CHECK CLF	CONTROL	SECTION	JOB	
	0014	16	255, ETC.	

FILENAME: S3BBR*MLN-BB*DR*03.dgn
DRAWING DATE: 7/28/2012

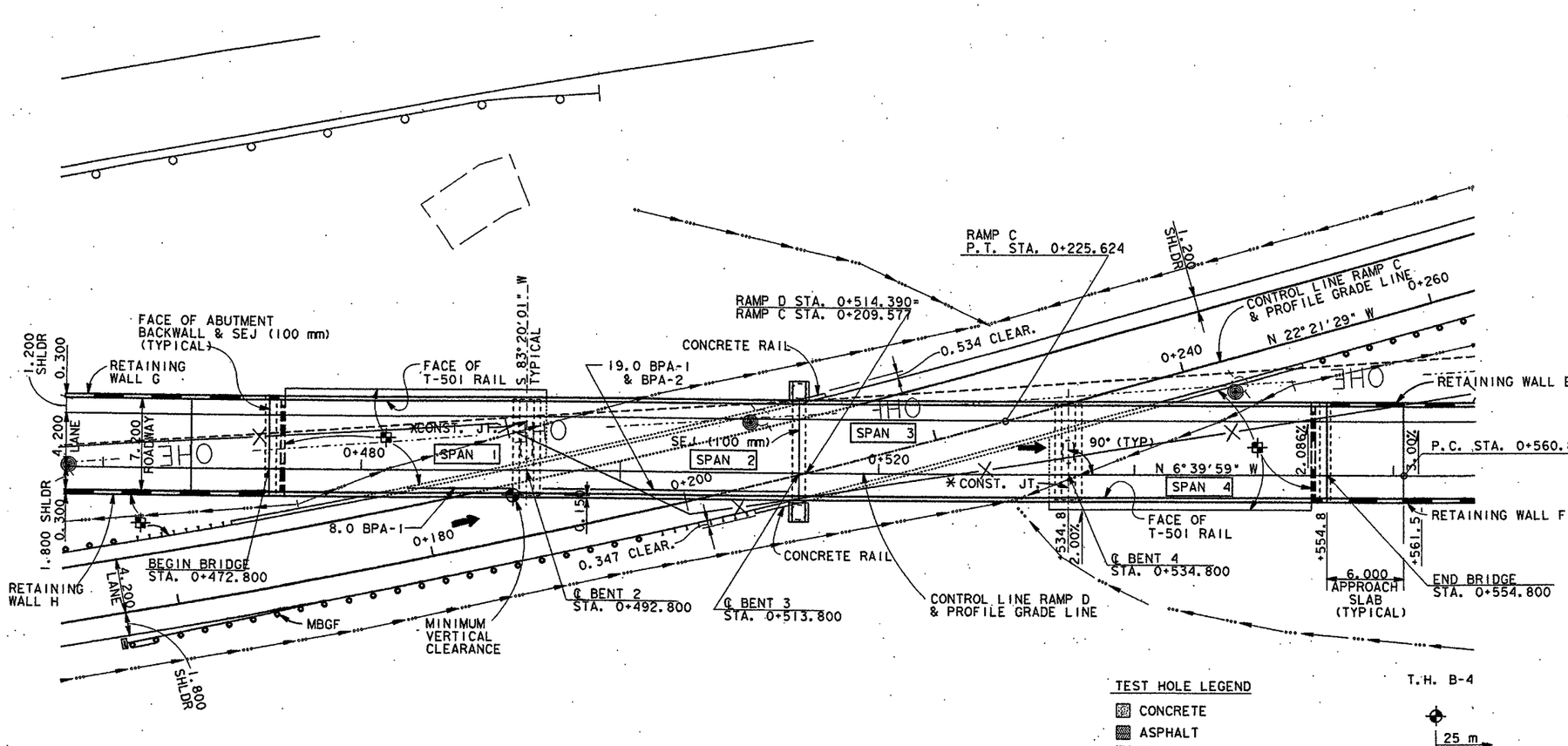

SCALE IN METERS
0 2 5 10m
SCALE: 1:200

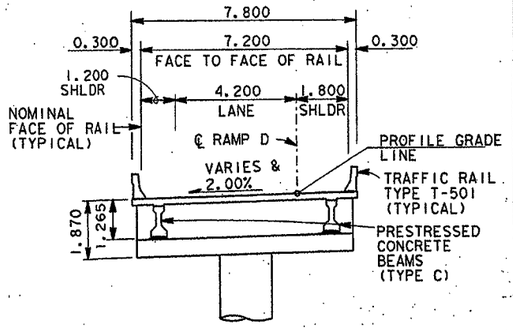

TYPICAL TRANSVERSE SECTION

SCALE= 1 : 100

SCALE IN METERS
0 1 2 4 6m
SCALE: 1:100

RAMP C HORIZONTAL CURVE DATA	RAMP D HORIZONTAL CURVE DATA
P.I. = 0+113.787	P.I. = 0+586.618
Δ = 18° 21' 27" LT.	Δ = 3° 41' 26" LT.
L = 225.624	L = 51.530
R = 704.200	R = 800.000
T = 113.787	T = 25.774

✠ LIMIT OF BRIDGE RIPRAP

* BEAM END TREATMENT REQUIRED AT INTERIOR BENTS (SEE "MISC. BRIDGE DETAILS" STANDARD SHT.)

S - SLOTTED ALIGNMENT DEVICE IN SLAB

DESIGN SPEED = 80 KM/H
NEW BRIDGE
NBI #02-220-0-0014-16-465
PSN # 0014-16-465

RAMP C VERTICAL CURVE DATA	RAMP D VERTICAL CURVE DATA
-2.611%	+2.900%
P.I. = 0+225.000	P.I. = 0+490.000
ELEV. = 187.060	ELEV. = 196.680
+2.600%	-1.800%
V.C. = 130.000	V.C. = 280.000
M = +0.724	M = -1.645

TEST HOLE LEGEND
- CONCRETE
- ASPHALT
- FILL
- CLAY
- SHALE
- LIMESTONE
- LIMESTONE WITH CLAY
- LIMESTONE WITH SHALE

T.H. B-4

✠ 25 m

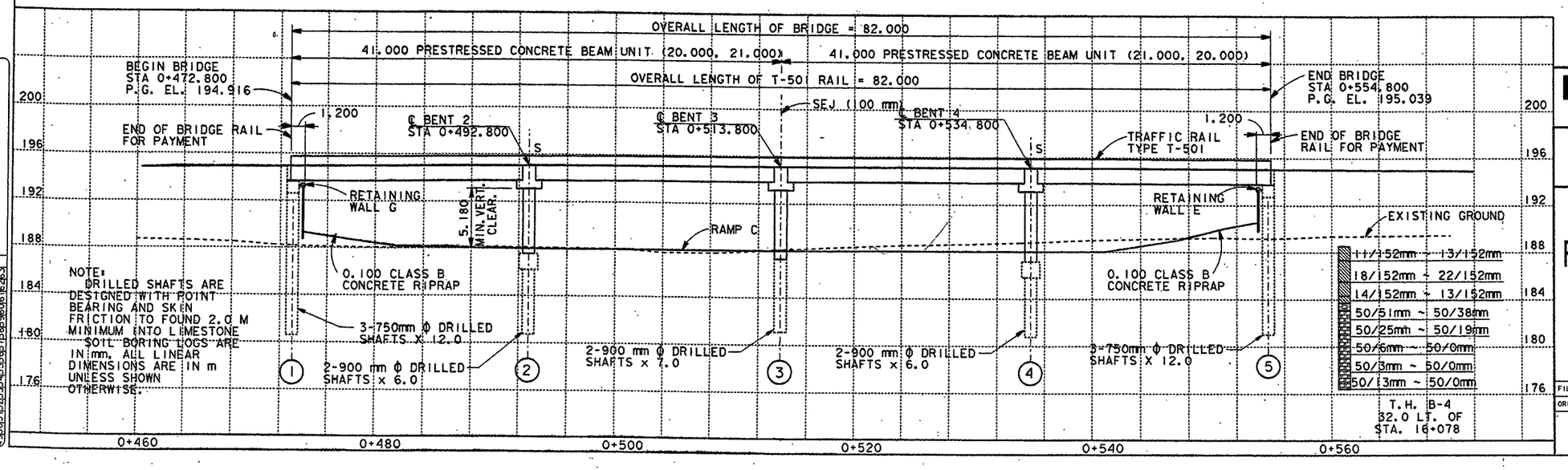

NOTE:
DRILLED SHAFTS ARE DESIGNED WITH POINT BEARING AND SKIN FRICTION TO FOUND 2.0 M MINIMUM INTO LIMESTONE
SOIL BORING LOGS ARE IN mm, ALL LINEAR DIMENSIONS ARE IN m UNLESS SHOWN OTHERWISE.

T.H. B-4
32.0 LT. OF STA. 16+078

MS18 LOADING

STATE OF TEXAS
DANIEL J.C. COPPS III
64481
REGISTERED PROFESSIONAL ENGINEER
DATE

The seal appearing on this document was authorized by Daniel J.C. Copps III, P.E. 64481, on August 8, 1997

Brown & Root, Inc.
Houston, Texas

Turner Collie & Braden Inc.
ENGINEERS • PLANNERS • PROJECT MANAGERS

Texas Department of Transportation
Design Division (Bridge)

For Contractors Information Only

BRIDGE LAYOUT

RAMP D OVER RAMP C

FILE: D73L0A02.DGN	DN: TCB	CK: BR	DW: TCB	CK: BR	
ORIG DATE:	DIST	FED REG	FEDERAL AID PROJECT		SHEET
REVISIONS	02	6	DPI 0101 (001)		1645
	COUNTY		CONTROL	SECT	JOB	HIGHWAY
	TARRANT		0014	16	211	IH-35W

LEVELS DISPLAYED
1 2 3 4 5 6 7 8 9 10 11 12 13 14 15 16
17 18 19 20 21 22 23 24 25 26 27 28 29 30 31 32
33 34 35 36 37 38 39 40 41 42 43 44 45 46 47 48
49 50 51 52 53 54 55 56 57 58 59 60 61 62 63

ACC:
1 2 3 4 5 6 7 8

SUMMARY OF ESTIMATED QUANTITIES

BID ITEM	420 2256	429 2007	429 2008	429 2010	438 2002	438 2002	454 2001
BID ITEM DESCRIPTION / BRIDGE ELEMENT	CL S CONC (HPC) (APPR SLAB)	CNC STR REP (HORIZ)	CNC STR REP (VERT)	CNC STR REP (BRDG DECK) (FULL DEPTH)	CLEAN AND SEAL EXIST JOINTS	CLEAN AND SEAL CRACKS	SEALED EXPANSION JOINT (4 IN) (SEJ-A)
	CY	SF	SF	SF	LF	LF	LF
2 - ABUTMENTS	19	15	10	24	24	20	24
3 - BENTS		5	5		24	20	
2 - CONCRETE BEAM UNITS			5			20	
TOTALS	19	20	20	24	48	60	24

REHABILITATION OF THE BRIDGE WILL INCLUDE THE FOLLOWING:

1. REPLACE EXISTING JOINT AT ABUTMENT 5 IN ACCORDANCE WITH THE DETAIL BELOW.
1. DECK - CLEAN OUT DEBRIS AND SAND FROM THE EXISTING JOINTS TO REMAIN AND REPAIR VARIOUS VERTICAL CRACKS IN THE RAILS IN ACCORDANCE WITH ITEMS 429 AND 438.
2. ABUTMENTS - REPAIR CRACKS AT THE BACK-WALLS AND CAPS IN ACCORDANCE WITH ITEMS 429 AND 438.
3. INTERIOR BENTS - REPAIR THE CRACKS AT THE BENT CAPS AND COLUMNS IN ACCORDANCE WITH ITEMS 429 AND 438.

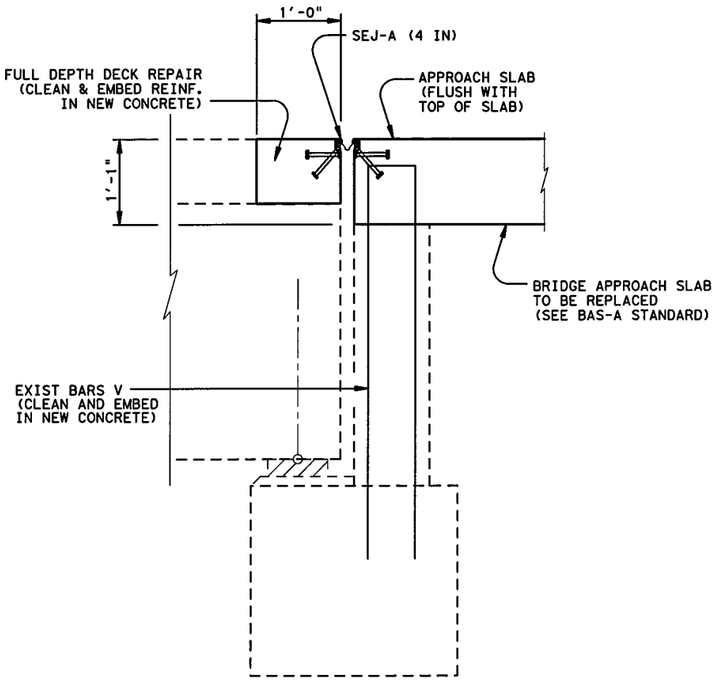

EXISTING ABUTMENT DETAIL

8/24/12

STATE OF TEXAS
CORBETT L. FREEMAN
86913
LICENSED
PROFESSIONAL ENGINEER

I. S. ENGINEERS, LLC
TBPE REG. # F-11657

Texas Department of Transportation
© 2012

IH 35W FROM NORTH TARRANT PKWY TO IH 820

ESTIMATED QUANTITIES

RAMP D (35N-BB)
OVER RAMP C (WCB-35N)

SCALE: NTS — SHEET 1 OF 1

DESIGN	FED.RD. DIV.NO.	FEDERAL AID PROJECT NO.		HIGHWAY NO.
CLF	6	(SEE TITLE SHEET)		IH 35W
GRAPHICS AXD	STATE	DISTRICT	COUNTY	SHEET NO.
CHECK ZS	TEXAS	FTW	TARRANT	1646
CHECK CLF	CONTROL 0014	SECTION 16	JOB 255, ETC.	

DRAWING DATE: 8/24/2012 FILENAME: S3BBR*35N-BB*EQ*02.dgn

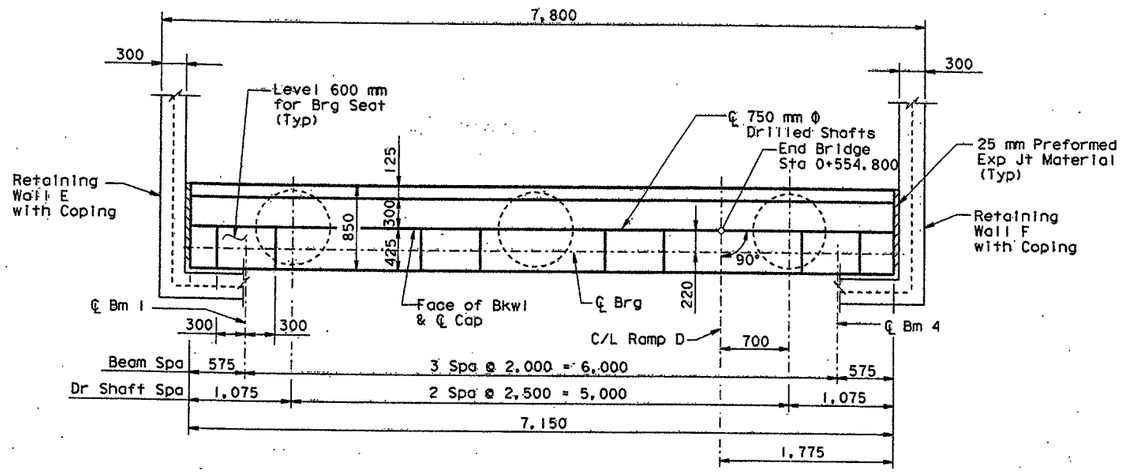

PLAN

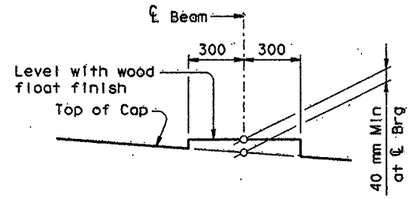

BEARING SEAT DETAIL

(Bearing surface shall be clean and free of all loose material before placing bearing pad.)

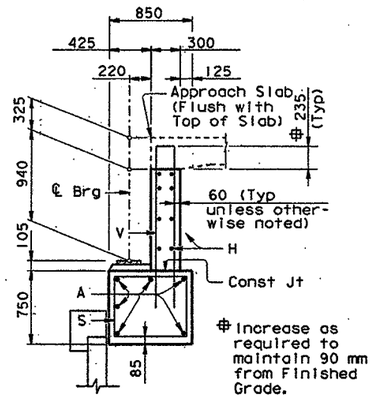

SECTION A-A

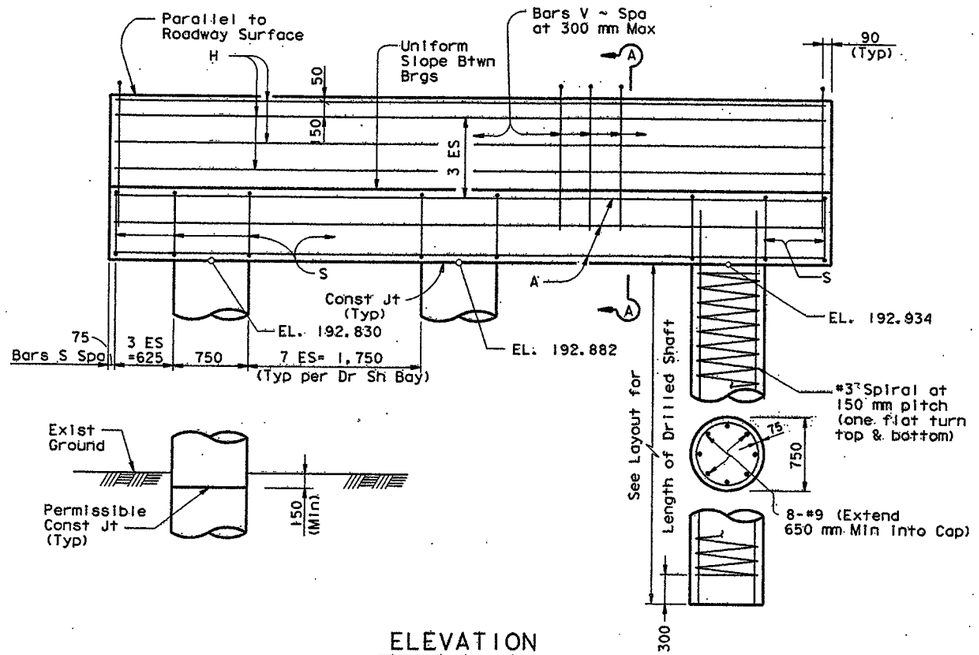

ELEVATION

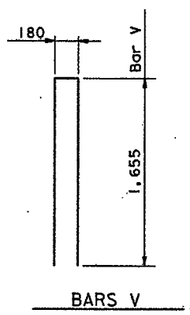

BARS V

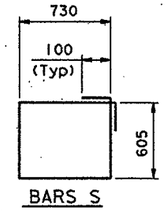

BARS S

NOTE:
All Reinforcing Steel in Drill Shafts included in price bid for Drilled Shaft

TABLE OF ESTIMATED QUANTITIES

Bar	No.	Size	Length	Mass
A	6	#11	7,050	3355
H	8	# 5	7,050	88
S	24	# 4	2,870	69
V	25	# 5	3,490	136
Reinforcing Steel			kg	628
Class "C" Concrete			m^3	6.8
Epoxy Water Proofing			m^2	11.1

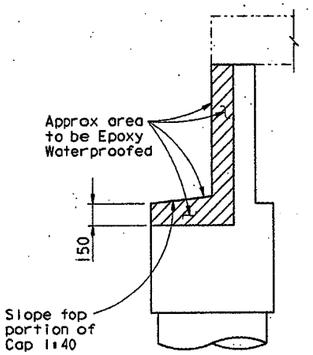

WATERPROOFING DETAIL

The front, top & ends of cap and face of backwall shall be epoxy waterproofed (except bearing seat buildups) as per Item, Surface Finish for Concrete.

GENERAL NOTES:

Designed according to AASHTO 1996 Standard and Interim Specifications.

All cap and wall reinforcing steel shall be Grade 420.

Drilled shaft reinforcing steel may be Grade 300.

Calculated Foundation Loads~
Cap Drilled Shafts = 700 kn /Drilled Shaft

Oversized Drilled Shafts may be used to accommodate existing equipment.

All dimensions in mm (millimeters) unless otherwise specified.

MS18 LOADING

The seal appearing on this document was authorized by Raymond Charles Barker, P.E. 44988, on August 8, 1997

Brown & Root
Houston, Texas

Texas Department of Transportation
Design Division (Bridge)

ABUTMENT NO. 5

For Contractors Information Only

RAMP D OVER RAMP C

FILE: D73DTA07.DGN	DN: LAH	CK: RCB	DW: OMA	CK: LAH
ORIG DATE:	DIST	FED REG	FEDERAL AID PROJECT #	SHEET
REVISIONS	02	6	DPI 0701 (001)	1647
	COUNTY		CONTROL SECT JOB	HIGHWAY
	TARRANT		0014 16 211	IH-35W

LEVELS DISPLAYED ACC:
1 2 3 4 5 6 7 8 9 10 11 12 13 14 15 16
17 18 19 20 21 22 23 24 25 26 27 28 29 30 31 32
33 34 35 36 37 38 39 40 41 42 43 44 45 46 47 48
49 50 51 52 53 54 55 56 57 58 59 60 61 62 63

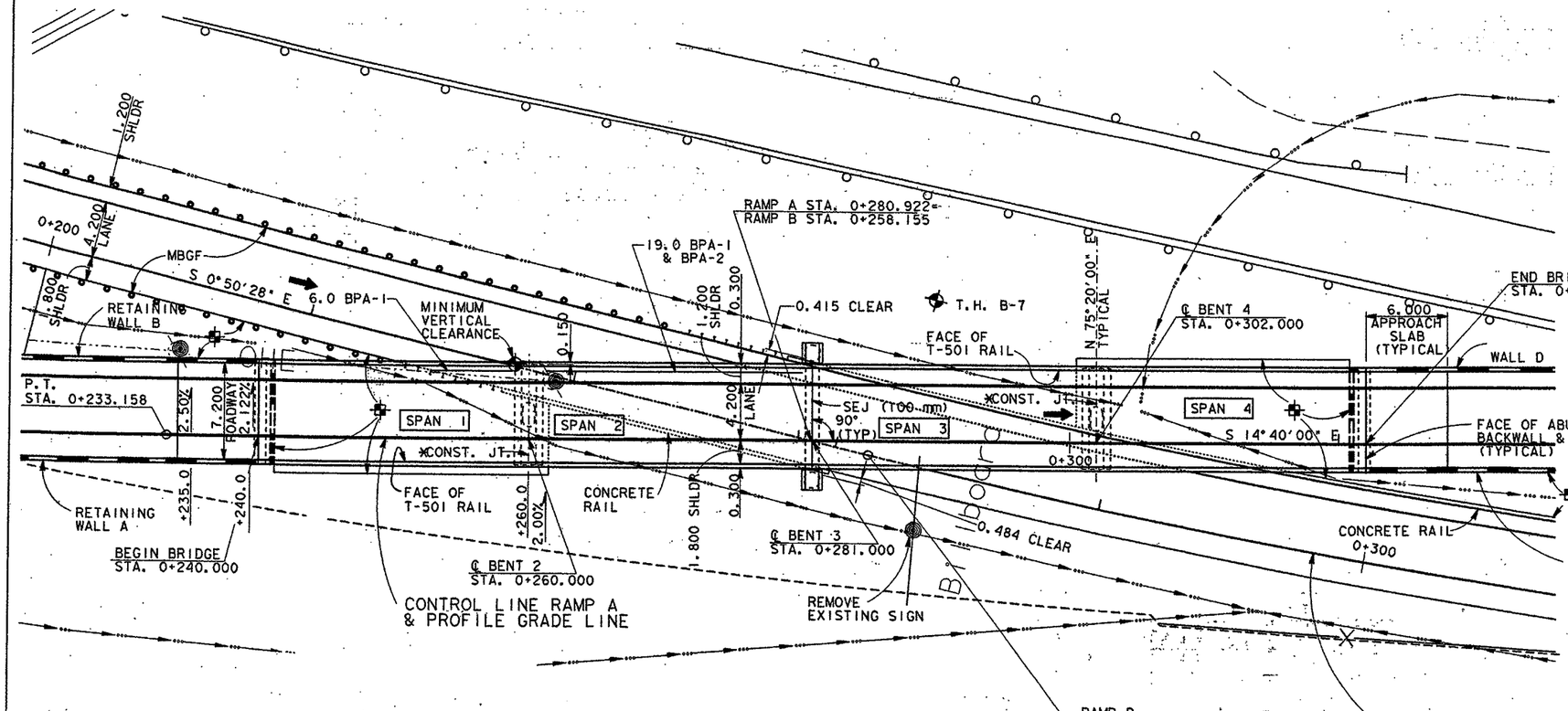

SCALE IN METERS
0 2 5 10m
SCALE: 1:200

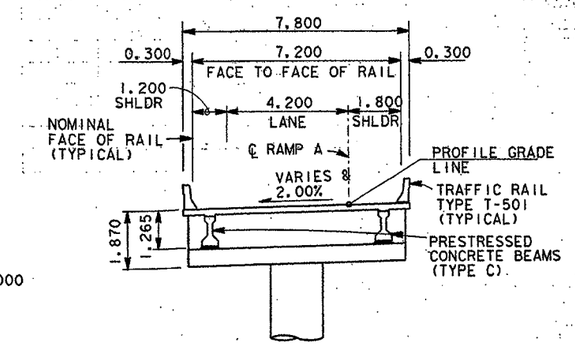

TYPICAL TRANSVERSE SECTION

SCALE= 1 : 100

SCALE IN METERS
0 1 2 4 6m
SCALE: 1:100

TEST HOLE LEGEND

- CONCRETE
- ASPHALT
- FILL
- CLAY
- SHALE
- LIMESTONE
- LIMESTONE WITH CLAY
- LIMESTONE WITH SHALE

LIMIT OF BRIDGE RIPRAP

BEAM END TREATMENT REQUIRED
* AT INTERIOR BENTS (SEE "MISC. BRIDGE DETAILS" STANDARD SHT.)

S - SLOTTED ALIGNMENT DEVICE IN SLAB

DESIGN SPEED = 80 KM/H
NEW BRIDGE
NBI #02-220-0-0014-16-464
PSN #0014-16-464

RAMP B
HORIZONTAL CURVE DATA
P.I. = 0+306.239
△ = 8°20'37" LT
L = 87.374
R = 600.000
T = 43.764

STATE OF TEXAS
DANIEL J.C. COPPS III
64481
PROFESSIONAL ENGINEER
The seal appearing on this document was authorized by Daniel J.C. Copps III, P.E. 64481, on August 8, 1997

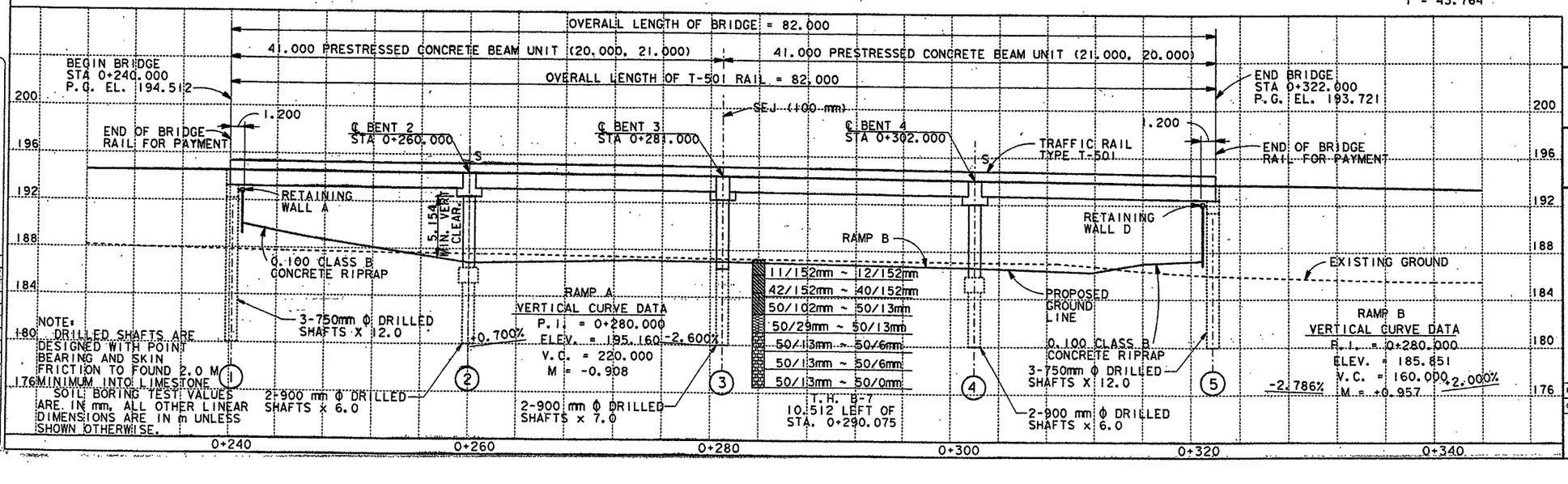

MS18 LOADING

Brown & Root, Inc.
Houston, Texas

Turner Collie & Braden Inc.
ENGINEERS• PLANNERS• PROJECT MANAGERS

Texas Department of Transportation
Design Division (Bridge)

For Contractors Information Only

BRIDGE LAYOUT

RAMP A OVER RAMP B

LEVELS DISPLAYED
ACC:

1	2	3	4	5	6	7	8	9	10	11	12	31	41	51	61	
17	18	19	20	21	22	23	24	25	26	27	28	29	30	31	52	
33	34	35	36	37	38	39	40	41	42	43	44	45	46	47	48	
49	50	51	52	53	54	55	56	57	58	59	60	61	62	63		

FILE: D73LOA01.DGN		DN: TCB	CK: BR	DW: TCB		CK: BR	
ORIG DATE:		DIST	FED REG	FEDERAL AID PROJECT #			SHEET
REVISIONS		02	6	DPI 0101 (601)			1648
		COUNTY		CONTROL	SECT	JOB	HIGHWAY
		TARRANT		0014	16	211	IH-35W

SUMMARY OF ESTIMATED QUANTITIES

BID ITEM	420 2256	429 2007	429 2008	429 2010	438 2002	438 2006	454 2001	780 2001
BID ITEM DESCRIPTION / BRIDGE ELEMENT	CL S CONC (HPC) (APPR SLAB)	CNC STR REP (HORIZ)	CNC STR REP (VERT)	CNC STR REP (BRDG DECK) (FULL DEPTH)	CLEAN AND SEAL EXIST JOINTS	CLEAN AND SEAL CRACKS	SEALED EXPANSION JOINT (4 IN) (SEJ-A)	EPOXY INJECTION (TY IX)
	CY	SF	SF	SF	LF	LF	LF	LF
2 - ABUTMENTS	19	15	10	24	24	20	24	
3 - BENTS		5	5		24	20		
2 - CONCRETE BEAM UNITS			5			20		302
TOTALS	19	20	20	24	48	60	24	302

REHABILITATION OF THE BRIDGE WILL INCLUDE THE FOLLOWING:

1. REPLACE EXISTING JOINT AT ABUTMENT 5 IN ACCORDANCE WITH THE DETAIL BELOW.
2. DECK - CLEAN OUT DEBRIS AND SAND FROM THE EXISTING JOINTS TO REMAIN AND REPAIR VARIOUS VERTICAL CRACKS IN THE RAILS IN ACCORDANCE WITH ITEMS 429 AND 438.
3. ABUTMENTS - REPAIR CRACKS AT THE BACK-WALLS AND CAPS IN ACCORDANCE WITH ITEMS 429 AND 438.
4. INTERIOR BENTS - REPAIR THE CRACKS AT THE BENT CAPS AND COLUMNS IN ACCORDANCE WITH ITEMS 429 AND 438.
5. EPOXY INJECTION SHALL BE MADE TO CRACKS IN THE EXISTING BRIDGE RAIL AS DIRECTED BY THE ENGINEER.

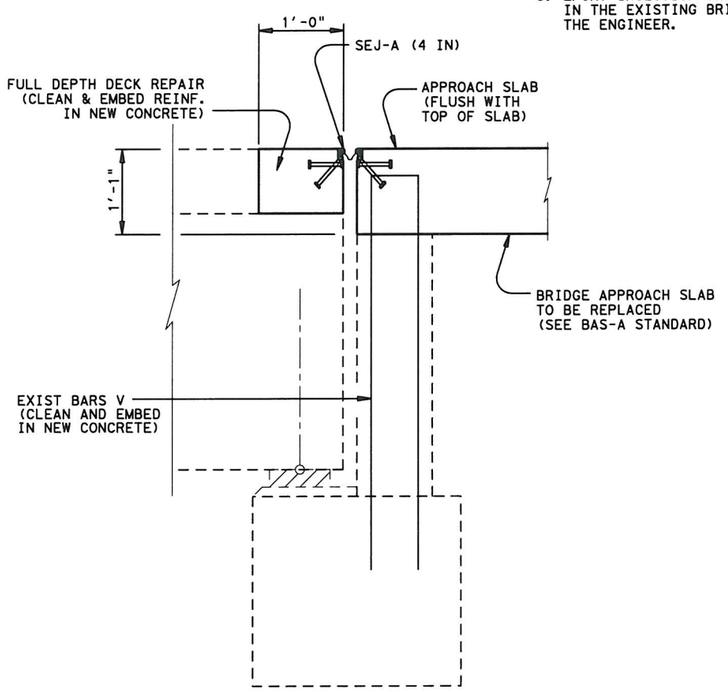

EXISTING ABUTMENT DETAIL

8/30/12

STATE OF TEXAS
CORBETT L. FREEMAN
86913
LICENSED
PROFESSIONAL ENGINEER

I. S. ENGINEERS, LLC
TBPE REG. # F-11657

Texas Department of Transportation
© 2012

IH 35W FROM NORTH TARRANT PKWY TO IH 820

ESTIMATED QUANTITIES

RAMP A (BB-35S)
OVER RAMP B (35S-WCB)

SCALE: NTS — SHEET 1 OF 1

DESIGN	FED.RD. DIV.NO.	FEDERAL AID PROJECT NO.		HIGHWAY NO.
CLF	6	(SEE TITLE SHEET)		IH 35W
GRAPHICS AXD	STATE	DISTRICT	COUNTY	SHEET NO.
CHECK ZS	TEXAS	FTW	TARRANT	1649
CHECK CLF	CONTROL	SECTION	JOB	
	0014	16	255, ETC.	

FILENAME: S3BBR*BB-35S*EQ*02.dgn
DRAWING DATE: 8/30/2012

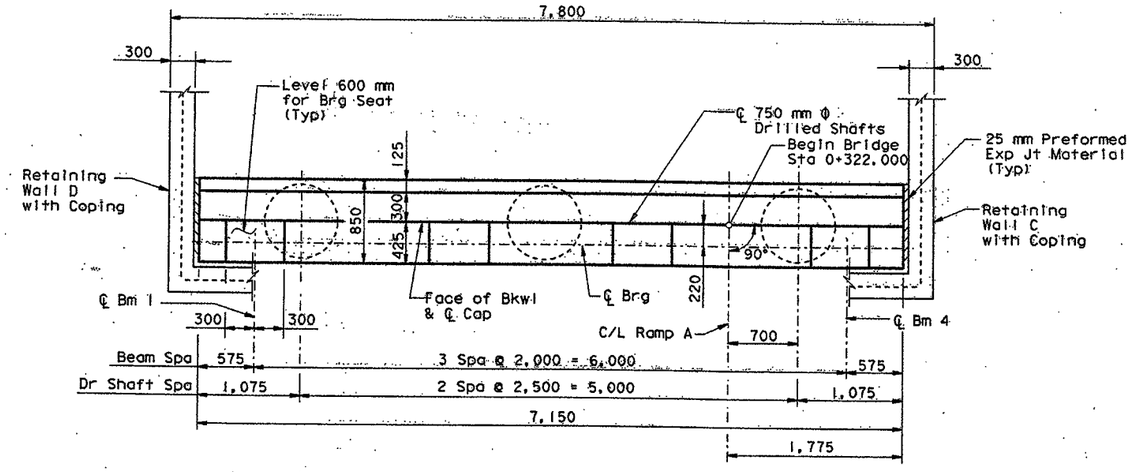

PLAN

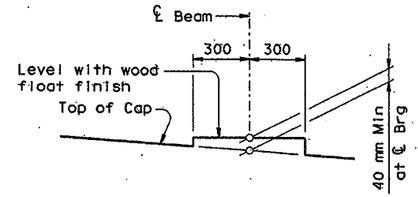

BEARING SEAT DETAIL

(Bearing surface shall be clean and free of all loose material before placing bearing pad.)

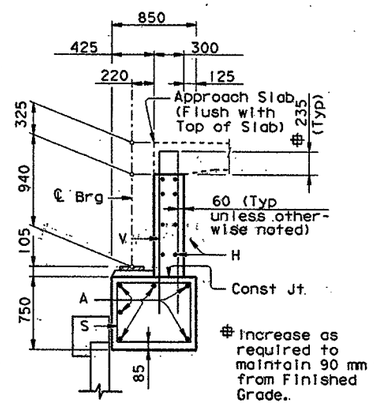

SECTION A-A

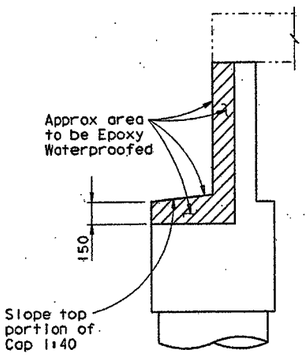

WATERPROOFING DETAIL

The front, top & ends of cap and face of backwall shall be epoxy waterproofed (except bearing seat buildups) as per item, Surface Finish for Concrete.

GENERAL NOTES:

Designed according to AASHTO 1996 Standard and Interim Specifications.

All cap and wall reinforcing steel shall be Grade 420.

Drilled shaft reinforcing steel may be Grade 300.

Calculated Foundation Loads~
Cap Drilled Shafts = 700 kn /Drilled Shaft

Oversized Drilled Shafts may be used to accommodate existing equipment.

All dimensions in mm (millimeters) unless otherwise specified.

MS18 LOADING

TABLE OF ESTIMATED QUANTITIES				
Bar	No.	Size	Length	Mass
A	6	#11	7,050	335
H	8	# 5	7,050	88
S	24	# 4	2,870	69
V	25	# 5	3,490	136
Reinforcing Steel			Kg	628
Class "C" Concrete			m^3	6.8
Epoxy Water Proofing			m^2	11.1

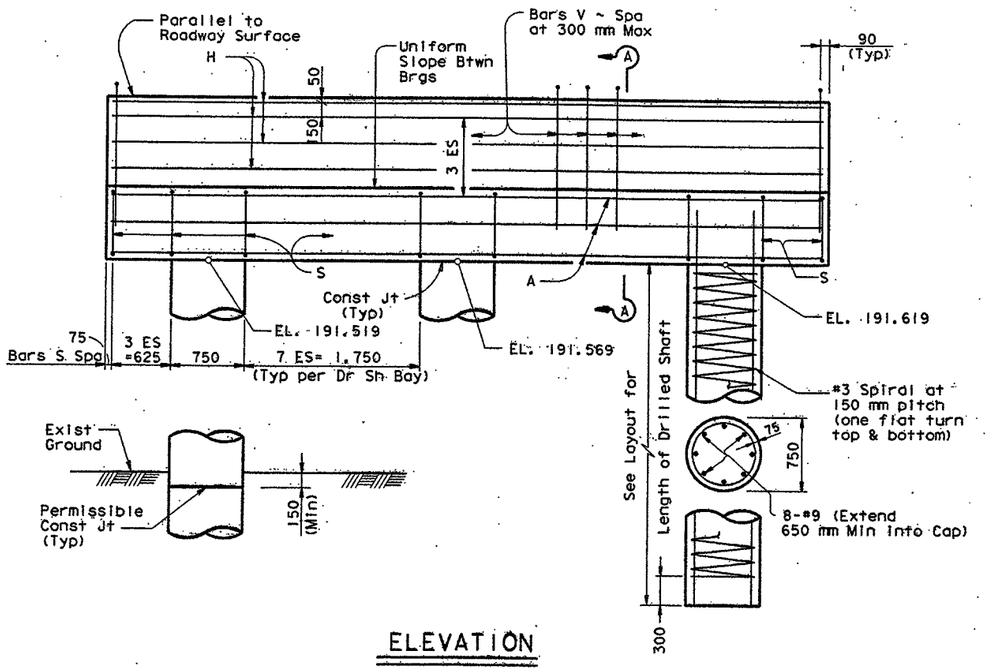

ELEVATION

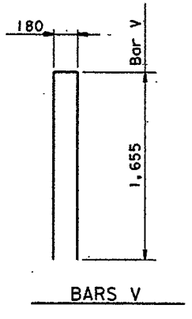

BARS V

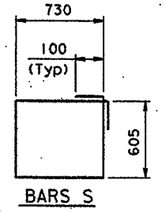

BARS S

NOTE:
All Reinforcing Steel in Drill Shafts Included in price bid for Drilled Shaft

STATE OF TEXAS
RAYMOND CHARLES BARKER
44988
REGISTERED PROFESSIONAL ENGINEER

The seal appearing on this document was authorized by Raymond Charles Barker, P.E. 44988, on August 8, 1997

Brown & Root
Houston, Texas

Texas Department of Transportation
Design Division (Bridge)

ABUTMENT NO. 5

For Contractors Information Only

RAMP A OVER RAMP B

FILE: D730TA15.DGN	DN: LAH	CK: RCB	DW: OMA	CK: LAH
ORIG DATE:	DIST	FED REG	FEDERAL AID PROJECT #	SHEET
REVISIONS	02	6	DPI. 0101 (001)	1650
	COUNTY		CONTROL	SECT	JOB	HIGHWAY
	TARRANT		0014	16	218	IH-35W

LEVELS DISPLAYED
1 2 3 4 5 6 7 8 9 10 11 12 13 14 15 16
17 18 19 20 21 22 23 24 25 26 27 28 29 30 31 32
33 34 35 36 37 38 39 40 41 42 43 44 45 46 47 48
49 50 51 52 53 54 55 56 57 58 59 60 61 62 63 64
ACC:

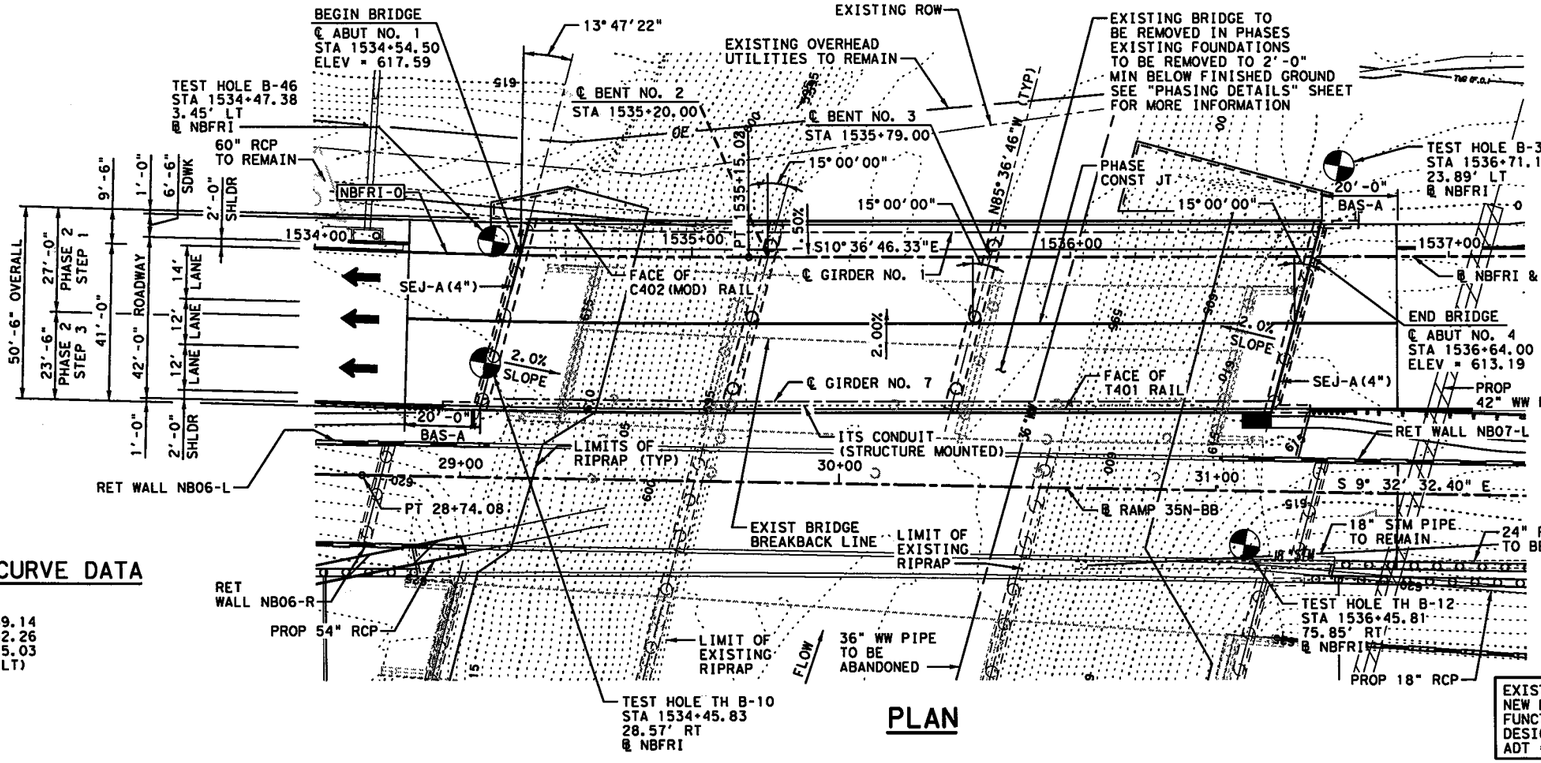

PLAN

HORIZONTAL CURVE DATA

NBFRI-0

PC STATION = 1531+89.14
PI STATION = 1533+52.26
PT STATION = 1535+15.03
Δ = 6° 31' 03.47" (LT)
D = 2° 00' 00.00"
T = 163.12'
L = 325.88'
R = 2,864.79'

GENERAL NOTES:

1. DESIGNED ACCORDING TO AASHTO LRFD BRIDGE DESIGN SPECIFICATIONS, 5TH EDITION (2010).
2. ALL DIMENSIONS ARE EITHER HORIZONTAL OR VERTICAL AND MUST BE CORRECTED FOR GRADE, CROWN, AND/OR SUPERELEVATION.
3. "D" DENOTES BENTS WITH DOWEL BARS "D" AND SLOTTED HOLES AT THE ENDS OF EXTERIOR GIRDERS ONLY.
4. SEE "BORING LOGS - BRIDGE" SHEETS FOR GEOTECHNICAL INFORMATION. FOR DRILLING LOG INFORMATION RELATED TO TH B-10 AND TH B-12 REFERENCE DESIGN PLANS FOR CSJ 0041-16-211 DATED FEB 1995.
5. CONTRACTOR TO VERIFY LOCATION OF ALL UTILITIES PRIOR TO EXCAVATION.
6. THE "H" VALUES SHOWN ARE ESTIMATED COLUMN HEIGHTS. CONTRACTOR IS RESPONSIBLE FOR CALCULATING ACTUAL COLUMN HEIGHTS BASED ON FIELD CONDITIONS.
7. CONTRACTOR TO VERIFY ALL ELEVATIONS AND DIMENSIONS TO EXISTING STRUCTURES IN THE FIELD PRIOR TO COMMENCING WORK OR ORDERING MATERIALS.
8. FOR TYPICAL SECTIONS SEE "PHASING DETAILS" SHEET.
9. SEE ROADWAY PLANS FOR EXISTING RIPRAP REMOVAL. EXISTING REINFORCING IN RIPRAP SHALL REMAIN AND LAP WITH NEW REINFORCING (IF REQUIRED). SEE CRR STANDARD FOR RIPRAP REINFORCING.
10. ALLOWANCE FOR FUTURE RESURFACING: 23.3 PSF.

EXIST NBI NUMBER: 02-220-0-0014-16-460
NEW NBI NUMBER: 02-220-0-0014-16-540
FUNCTIONAL CLASS = MINOR COLLECTOR
DESIGN SPEED = 40 MPH
ADT = 24,500 (2030)

HL 93 LOADING

HYDRAULIC DATA (10 YEAR DESIGN)

Q10 = 10,846 CFS Q100 = 21,003 CFS
HW10 = 604.83' HW100 = 611.01'
V10 = 6.70 FPS V100 = 8.45 FPS

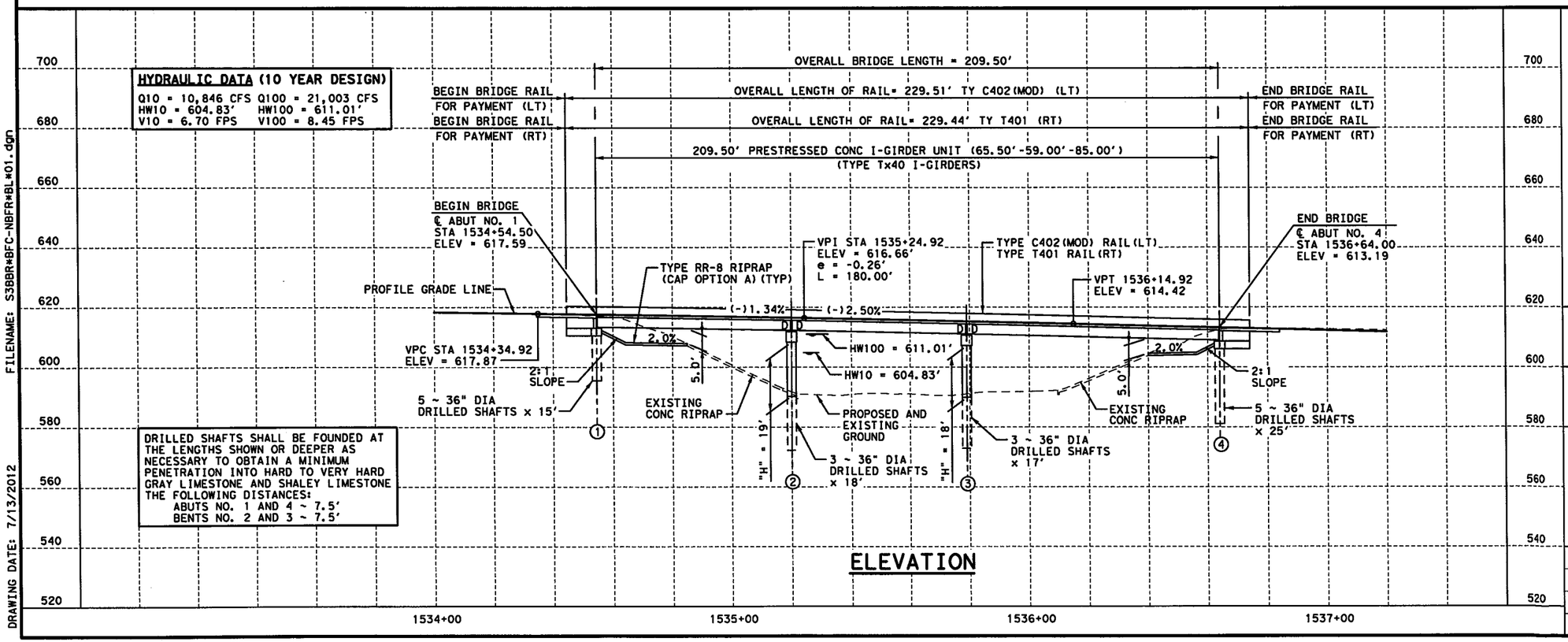

ELEVATION

DRILLED SHAFTS SHALL BE FOUNDED AT THE LENGTHS SHOWN OR DEEPER AS NECESSARY TO OBTAIN A MINIMUM PENETRATION INTO HARD TO VERY HARD GRAY LIMESTONE AND SHALEY LIMESTONE THE FOLLOWING DISTANCES:
ABUTS NO. 1 AND 4 ~ 7.5'
BENTS NO. 2 AND 3 ~ 7.5'

STATE OF TEXAS
TIMOTHY J. ROSS
98465
LICENSED
PROFESSIONAL ENGINEER
7/6/12

P.E. Structural Consultants, Inc.
www.PEStructural.com
TBPE Firm No. F-1475

Texas Department of Transportation
© 2012

IH 35W FROM NORTH TARRANT PKWY TO IH 820

BRIDGE LAYOUT
NB FRONTAGE RD
OVER BIG FOSSIL CK

SCALE: 1" = 40' SHEET 1 OF 1

DESIGN	FED.RD. DIV.NO.	FEDERAL AID PROJECT NO.		HIGHWAY NO.
TJR	6	(SEE TITLE SHEET)		IH 35W
GRAPHICS	STATE	DISTRICT	COUNTY	SHEET NO.
TLS	TEXAS	FTW	TARRANT	1651
CHECK NRR	CONTROL	SECTION	JOB	
CHECK AB	0014	16	255, ETC.	

FILENAME: S3BBR#BFC-NBFR#BL#01.dgn
DRAWING DATE: 7/13/2012

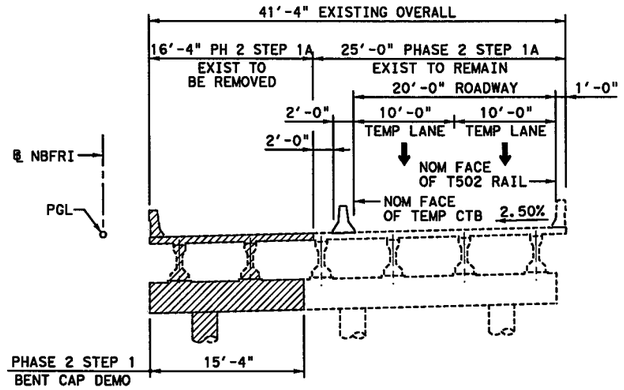

EXISTING TYPICAL SECTION W/ PHASE 2 STEP 1A CONST

(NTS)

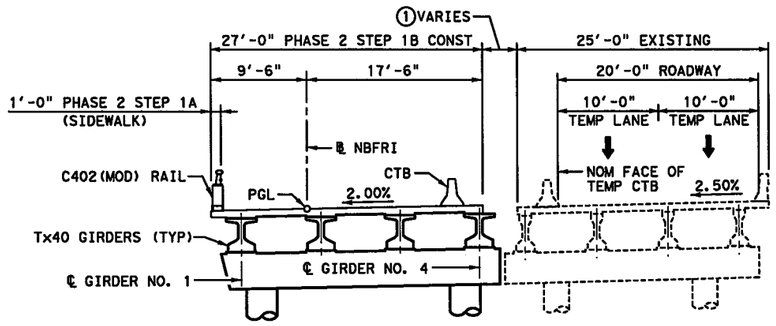

① 1'-5" MIN ~ 6'-9" MAX

PHASE 2 STEP 1B CONSTRUCTION TYPICAL SECTION

(NTS)

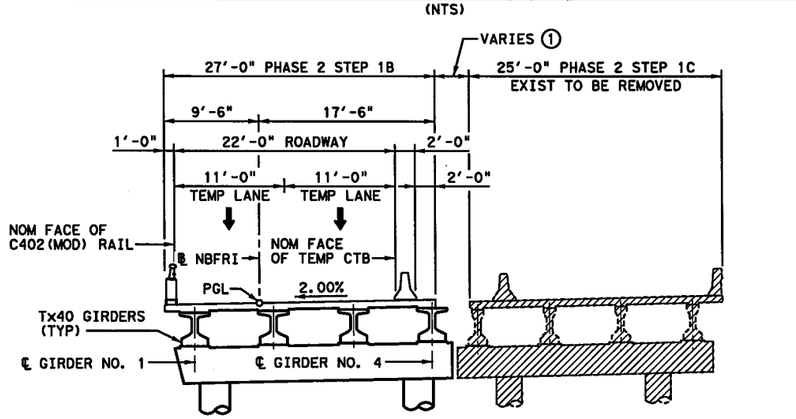

PHASE 2 STEP 1C CONSTRUCTION TYPICAL SECTION

(NTS)

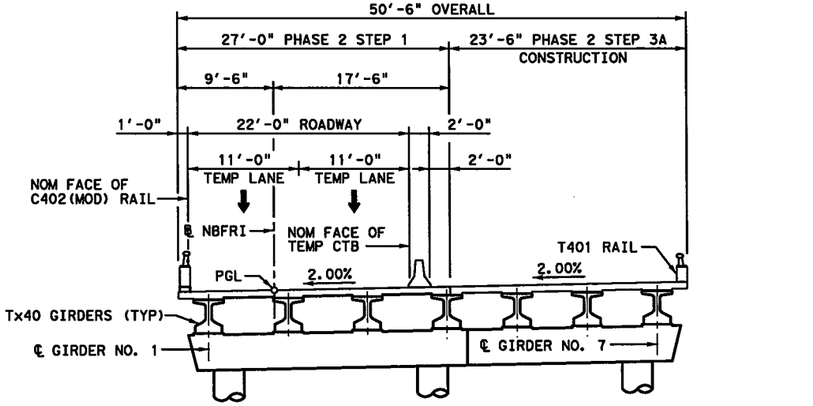

PHASE 2 STEP 3A CONSTRUCTION TYPICAL SECTION

(NTS)

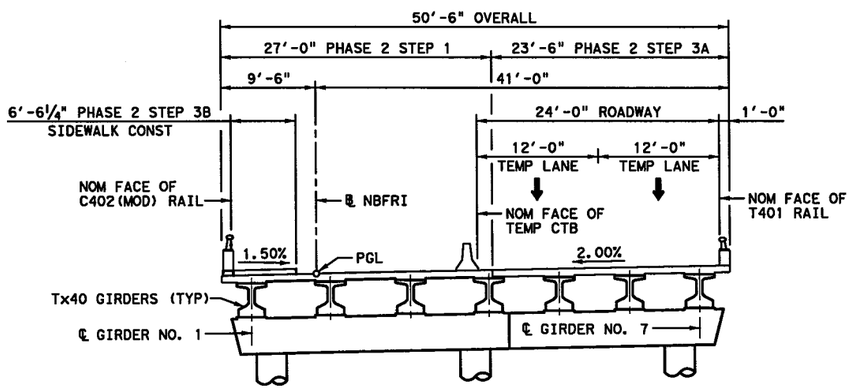

PHASE 2 STEP 3B CONSTRUCTION TYPICAL SECTION

(NTS)

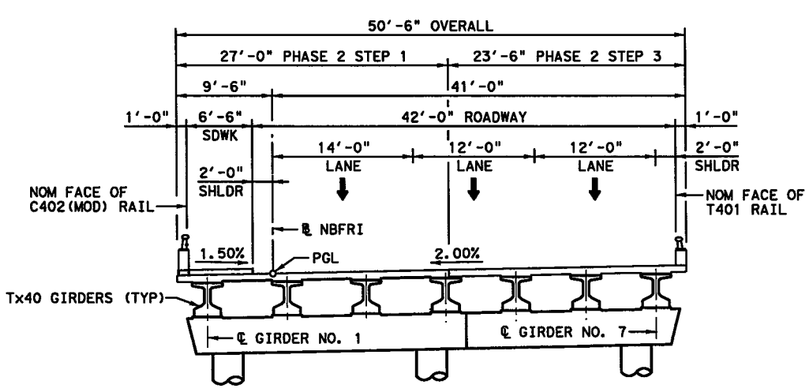

COMPLETED TYPICAL SECTION

(NTS)

HL 93 LOADING

PESC
P.E. Structural Consultants, Inc.
www.PEStructural.com
TBPE Firm No. F-1475

Texas Department of Transportation

© 2012

IH 35W FROM NORTH TARRANT PKWY TO IH 820

PHASING DETAILS

NB FRONTAGE RD
OVER BIG FOSSIL CK

SCALE: NTS — SHEET 1 OF 1

DESIGN	FED. RD. DIV. NO.	FEDERAL AID PROJECT NO.		HIGHWAY NO.
TJR	6	(SEE TITLE SHEET)		IH 35W
GRAPHICS	STATE	DISTRICT	COUNTY	SHEET NO.
TLS	TEXAS	FTW	TARRANT	
CHECK	CONTROL	SECTION	JOB	1652
NRR	0014	16	255, ETC.	
CHECK				
AB				

STATE OF TEXAS
TIMOTHY J. ROSS
98465
LICENSED
PROFESSIONAL ENGINEER
7/6/12

FILENAME: S38BR*BFC-NBFR*PD#01.dgn
DRAWING DATE: 7/13/2012

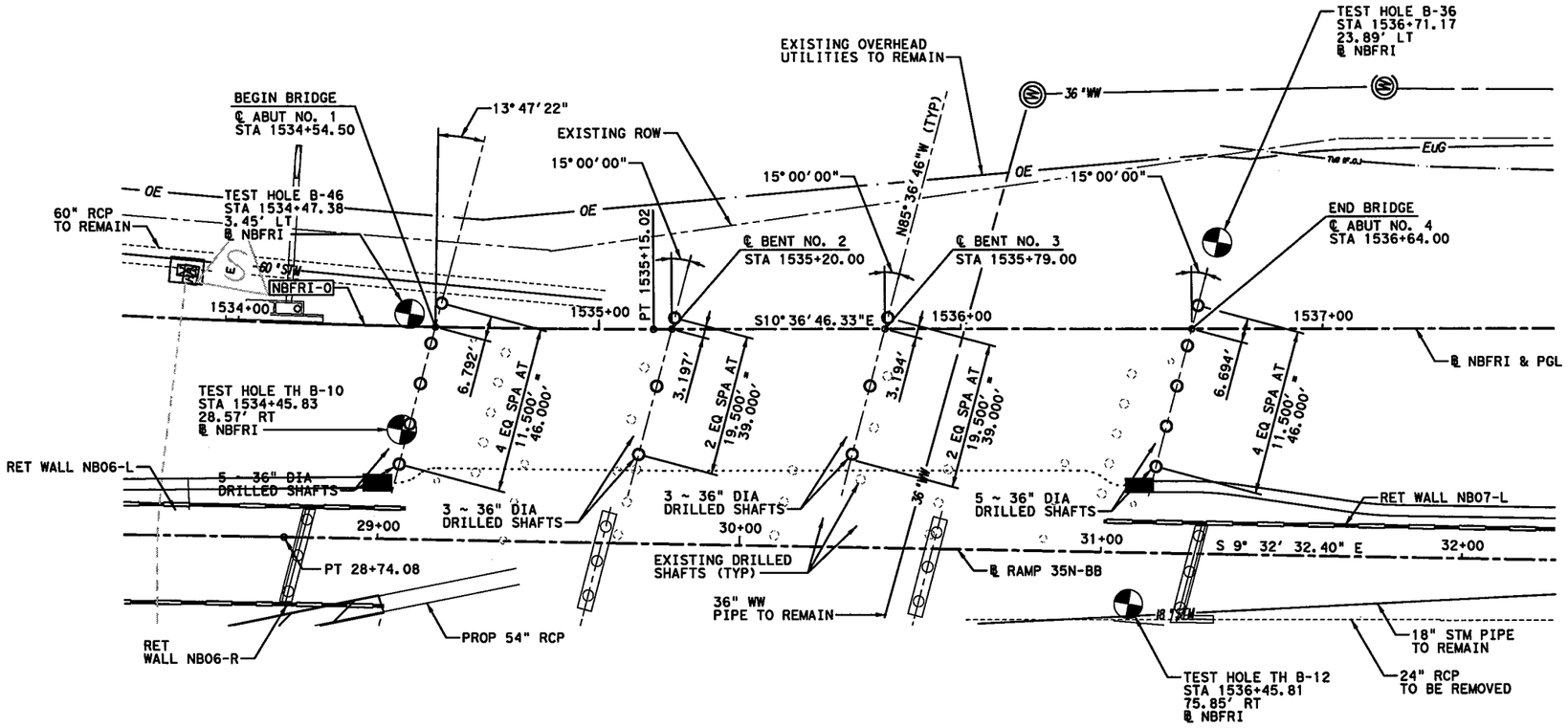

0' 20' 40'

SCALE IN FEET

GENERAL NOTES:

1. FOR ANY TEMPORARY SHORING REQUIRED AT INTERIOR BENT LOCATIONS, FOLLOW TXDOT STANDARD SPECIFICATION ITEM 403.
2. SEE "BORING LOGS - BRIDGE" SHEETS FOR GEOTECHNICAL INFORMATION. FOR DRILLING LOG INFORMATION RELATED TO TH B-10 AND TH B-12 REFERENCE DESIGN PLANS FOR CSJ 0041-16-211 DATED FEB 1995.
3. DENOTES TEST HOLE LOCATION.
4. CONTRACTOR TO VERIFY LOCATION OF ALL UTILITIES PRIOR TO EXCAVATION.

STATE OF TEXAS
TIMOTHY J. ROSS
98465
LICENSED
PROFESSIONAL ENGINEER
7/6/12

PLAN

HL 93 LOADING

PESC P.E. Structural Consultants, Inc.
www.PEStructural.com
TBPE Firm No. F-1475

Texas Department of Transportation
© 2012

IH 35W FROM NORTH TARRANT PKWY TO IH 820

FOUNDATION LAYOUT

NB FRONTAGE RD

OVER BIG FOSSIL CK

SCALE: 1" = 40' SHEET 1 OF 1

DESIGN	FED.RD. DIV.NO.	FEDERAL AID PROJECT NO.		HIGHWAY NO.
TJR	6	(SEE TITLE SHEET)		IH 35W
GRAPHICS	STATE	DISTRICT	COUNTY	SHEET NO.
TLS	TEXAS	FTW	TARRANT	1653
CHECK	CONTROL	SECTION	JOB	
NRR	0014	16	255, ETC.	
CHECK				
AB				

DRAWING DATE: 7/13/2012 FILENAME: S38BR*BFC-NBFR*FL*01.dgn

SUMMARY OF ESTIMATED QUANTITIES

	BID ITEM	104 2009	416 2004	420 2041	420 2042	420 2256	420 2292	422 2003	425 2066	428 2002	432 2002	442 2048	450 2635	450 2636	454 2001
	BID ITEM DESCRIPTION / BRIDGE ELEMENT	REMOVING CONC (RIPRAP)	DRILL SHAFT (36 IN)	CL C CONC (HPC) (ABUT)	CL C CONC (HPC) (BENT)	CL S CONC (HPC) (APPR SLAB)	CL S CONC (HPC) (BRIDGE SDWLK)	REINF CONC SLAB (HPC) (CL S)	PRESTR CONC GIRDER (TX40)	CONC SURF TREAT (CLASS II)	RIPRAP (CONC) (5 IN)	STRUCTURAL STEEL (MISC NON - BRIDGE)	RAIL TY C402 (MOD) (HPC)	RAIL (TY T401) (HPC)	SEALED EXPANSION JOINT (4 IN) (SEJ-A)
		SY	LF	CY	CY	CY	CY	SF	LF	SY	CY	LB	LF	LF	LF
PHASE 2 STEP 1	2 - ABUTMENTS	346	120	33.8		54				132	48				
	2 - INTERIOR BENTS		70		45.7					60					
	1 - 209.500' PRESTRESSED CONCRETE I-GIRDER UNIT (SPANS 1-3)						5.7	5,656	832.09	668			229.5		55
	PHASE 2 STEP 1 TOTAL	346	190	33.8	45.7	54	5.7	5,656	832.09	860	48	0	229.5	0.0	55
PHASE 2 STEP 3A	2 - ABUTMENTS	187	80	27.3		47				108	26				
	2 - INTERIOR BENTS		35		29.2					38					
	1 - 209.500' PRESTRESSED CONCRETE I-GIRDER UNIT (SPANS 1-3)							4,922	623.94	555				229.4	47
	PHASE 2 STEP 3A TOTAL	187	115	27.3	29.2	47	0.0	4,922	623.94	701	26	0	0.0	229.4	47
PHASE 2 STEP 3B	2 - ABUTMENTS														
	2 - INTERIOR BENTS														
	1 - 209.500' PRESTRESSED CONCRETE I-GIRDER UNIT (SPANS 1-3)						31.1			175		174			
	PHASE 2 STEP 3B TOTAL	0	0	0.0	0.0	0	31.1	0	0.00	175	0	174	0.0	0.0	0
	TOTALS	533	305	61.1	74.9	101	36.8	10,578	1,456.03	1,736	74	174	229.5	229.4	102

BEARING SEAT ELEVATIONS

	BEAM 1	BEAM 2	BEAM 3	BEAM 4	BEAM 5	BEAM 6	BEAM 7
BENT 1 (FWD)	612.945	613.132	613.318	613.503	613.666	613.829	613.992
BENT 2 (BK)	611.871	612.068	612.266	612.463	612.635	612.808	612.980
(FWD)	611.874	612.072	612.270	612.467	612.641	612.814	612.986
BENT 3 (BK)	610.684	610.889	611.095	611.300	611.480	611.660	611.840
(FWD)	610.493	610.698	610.904	611.109	611.290	611.470	611.650
BENT 4 (BK)	608.456	608.667	608.877	609.088	609.273	609.459	609.644

STATE OF TEXAS
TIMOTHY J. ROSS
98465
LICENSED
PROFESSIONAL ENGINEER

Timothy J Ross
8/29/12

HL 93 LOADING

PESC P.E. Structural Consultants, Inc.
www.PEStructural.com
TBPE Firm No. F-1475

Texas Department of Transportation
© 2012

IH 35W FROM NORTH TARRANT PKWY TO IH 820

EST. QUANTITIES AND BEARING SEAT ELEV.

NB FRONTAGE RD

OVER BIG FOSSIL CK

SCALE: NTS SHEET 1 OF 1

DESIGN	FED.RD. DIV.NO.	FEDERAL AID PROJECT NO.		HIGHWAY NO.
TJR	6	(SEE TITLE SHEET)		IH 35W
GRAPHICS	STATE	DISTRICT	COUNTY	SHEET NO.
TLS	TEXAS	FTW	TARRANT	
CHECK	CONTROL	SECTION	JOB	1654
NRR				
CHECK	0014	16	255, ETC.	
AB				

DRAWING DATE: 7/13/2012 FILENAME: S3BBR*BFC-NBFR*EQ*01.DGN

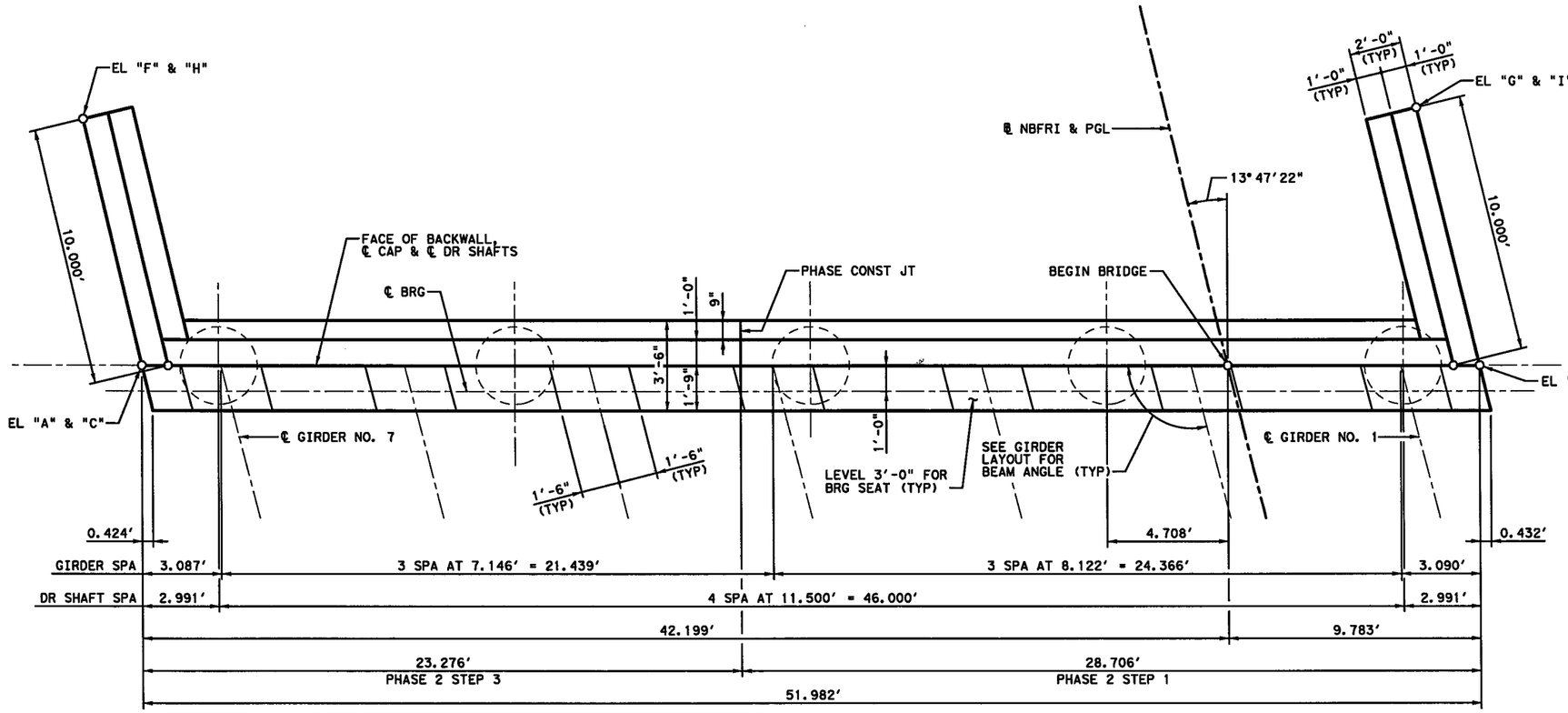

PLAN

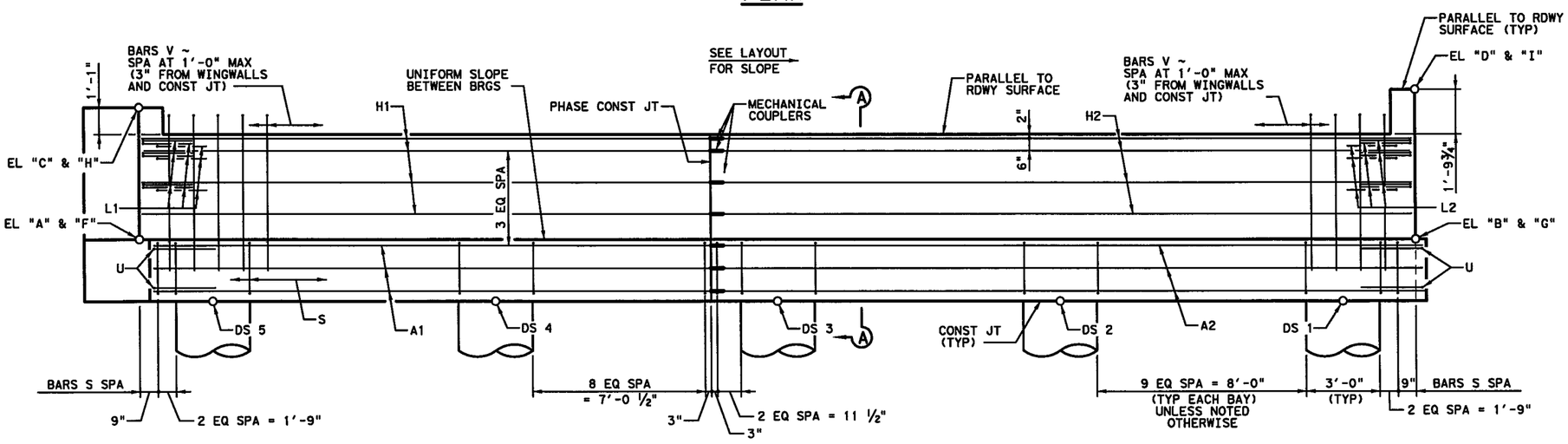

ELEVATION

TABLE OF ELEVATIONS					
CAP	"A"	"B"	"C"	"D"	---
	613.943	612.755	618.556	618.098	---
WINGWALLS	"F"	"G"	"H"	"I"	---
	614.075	612.904	618.688	618.247	---
TOP OF DS	DS 1	DS 2	DS 3	DS 4	DS 5
	610.323	610.586	610.849	611.111	611.374
SHAFT TIP	595.323	595.586	595.849	596.111	596.374
AS-BUILT SHAFT TIP					

GENERAL NOTES:

1. DESIGNED ACCORDING TO AASHTO LRFD BRIDGE DESIGN SPECIFICATIONS, 5TH EDITION (2010).
2. CLASS "C" (HPC) CONCRETE STRENGTH F'C = 3,600 PSI.
3. ALL CAP AND WALL REINFORCING SHALL BE GRADE 60.
4. SEE FD STANDARD FOR ALL FOUNDATION DETAILS AND NOTES.
5. SEE RAIL STANDARD FOR RAIL ANCHORAGE IN WINGWALLS.
6. CALCULATED FOUNDATION LOADS: CAP DRILLED SHAFTS = 85 TONS / D.S.

STATE OF TEXAS
TIMOTHY J. ROSS
98465
LICENSED
PROFESSIONAL ENGINEER
7/6/12

HL 93 LOADING

PESC
P.E. Structural Consultants, Inc.
www.PEStructural.com
TBPE Firm No. F-1475

Texas Department of Transportation
© 2012

IH 35W FROM NORTH TARRANT PKWY TO IH 820

ABUTMENT NO. 1

NB FRONTAGE RD

OVER BIG FOSSIL CK

SCALE: NTS — SHEET 1 OF 2

DESIGN	FED.RD. DIV.NO.	FEDERAL AID PROJECT NO.		HIGHWAY NO.
TJR	6	(SEE TITLE SHEET)		IH 35W
GRAPHICS	STATE	DISTRICT	COUNTY	SHEET NO.
TLS	TEXAS	FTW	TARRANT	
CHECK	CONTROL	SECTION	JOB	1655
NRR	0014	16	255, ETC.	
CHECK				
AB				

FILENAME: S3BBR*BFC-NBFR*AB*01.dgn
DRAWING DATE: 7/13/2012

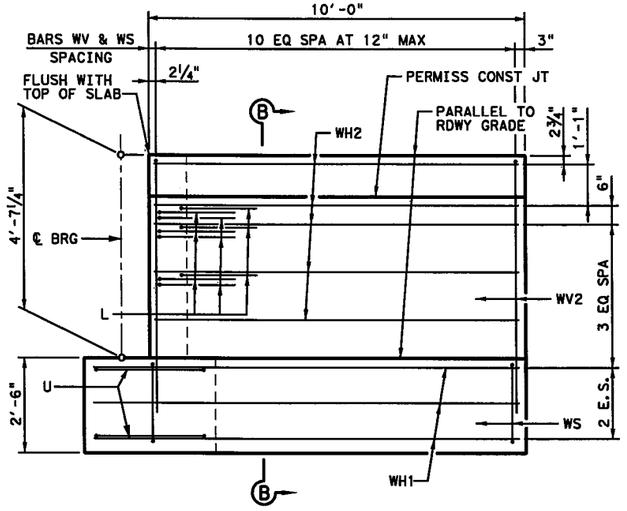

PHASE 2 STEP 3 WINGWALL ELEVATION

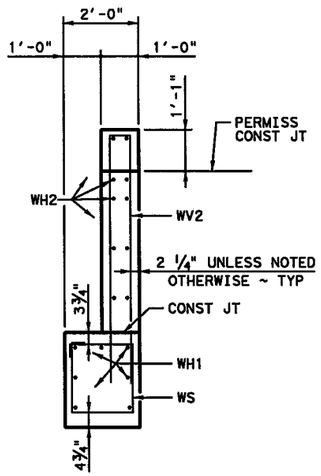

SECTION B-B

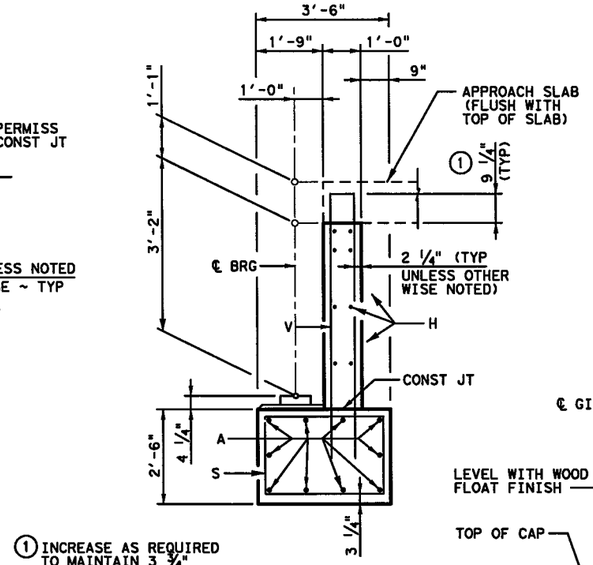

① INCREASE AS REQUIRED TO MAINTAIN 3 ¾" FROM FINISHED GRADE.

SECTION A-A

TABLE OF ESTIMATED QUANTITIES ~ PH 2 STEP 1				
BAR	NO.	SIZE	LENGTH	WEIGHT
A2	10	#11	28'-2"	1,496
H2	8	#6	28'-6"	342
L2	9	#6	4'-0"	54
S	24	#5	11'-4"	284
U	2	#6	8'-1"	24
V	28	#5	11'-9"	343
WH1	7	#6	11'-5"	120
WH2	12	#6	9'-8"	174
WS	11	#4	7'-8"	56
WV1	11	#5	13'-5"	154
REINFORCING STEEL			LB	3,047
CL C CONC (HPC) (ABUT)			CY	16.5

TABLE OF ESTIMATED QUANTITIES ~ PH 2 STEP 3				
BAR	NO.	SIZE	LENGTH	WEIGHT
A1	10	#11	23'-9"	1,262
H1	8	#6	23'-1"	277
L1	9	#6	4'-0"	54
S	20	#5	11'-4"	236
U	2	#6	8'-1"	24
V	23	#5	11'-9"	282
WH1	7	#6	11'-5"	120
WH2	10	#6	9'-8"	145
WS	11	#4	7'-8"	56
WV2	11	#5	11'-11"	137
REINFORCING STEEL			LB	2,593
CL C CONC (HPC) (ABUT)			CY	13.8

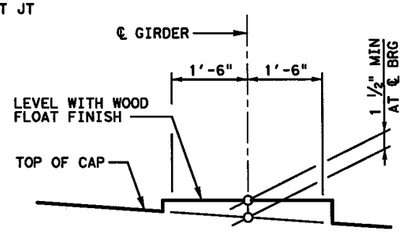

BEARING SEAT DETAIL

(BEARING SURFACE SHALL BE CLEAN AND FREE OF ALL LOOSE MATERIAL BEFORE PLACING BEARING PAD)

THE FRONT AND BACK, BACKWALL FACES, SIDES, AND TOP, EXCEPT UNDER BEARING AREAS, SHALL BE TREATED WITH A "CLASS II, TYPE I PENETRATING CONCRETE SURFACE TREATMENT".

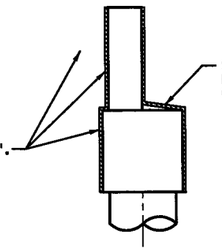

CONCRETE SURFACE TREATMENT DETAIL FOR ABUTMENT

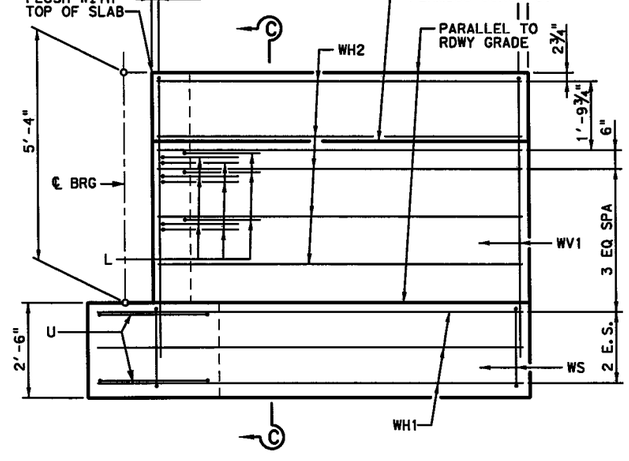

PHASE 2 STEP 1 WINGWALL ELEVATION

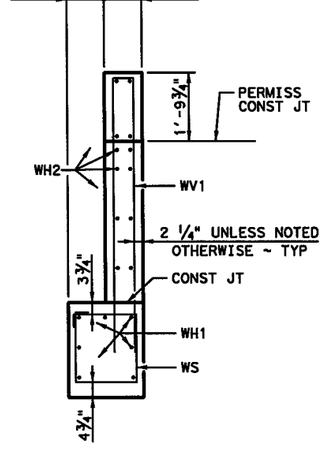

SECTION C-C

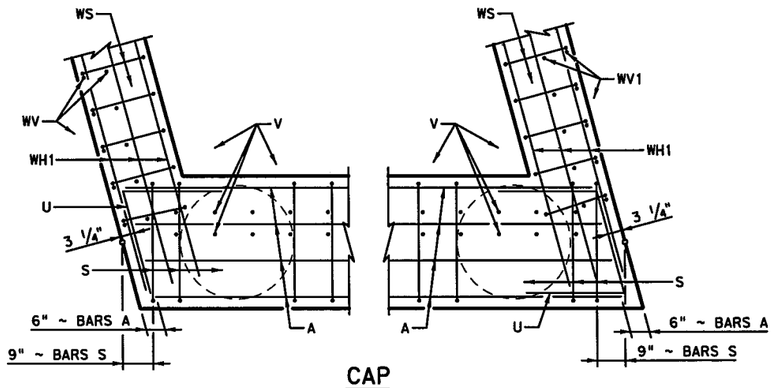

CAP

HL 93 LOADING

P.E. Structural Consultants, Inc.
www.PEStructural.com
TBPE Firm No. F-1475

Texas Department of Transportation
© 2012

IH 35W FROM NORTH TARRANT PKWY TO IH 820

ABUTMENT NO. 1
NB FRONTAGE RD
OVER BIG FOSSIL CK

SCALE: NTS — SHEET 2 OF 2

DESIGN	FED.RD. DIV.NO.	FEDERAL AID PROJECT NO.		HIGHWAY NO.
TJR	6	(SEE TITLE SHEET)		IH 35W
GRAPHICS	STATE	DISTRICT	COUNTY	SHEET NO.
TLS	TEXAS	FTW	TARRANT	1656
CHECK	CONTROL	SECTION	JOB	
NRR	0014	16	255, ETC.	
CHECK				
AB				

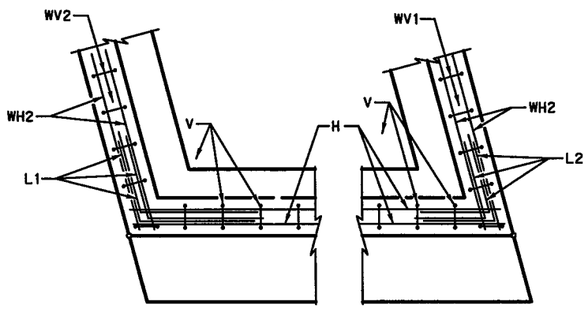

BACKWALL

CORNER DETAILS

WINGWALL DETAILS

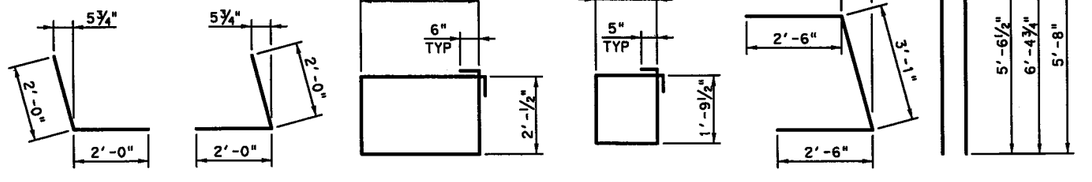

BARS L1 BARS L2 BARS S BARS WS BARS U BARS V & WV

DRAWING DATE: 7/13/2012 FILENAME: S3BBR#BFC-NBFR#AB#02.dgn

TABLE OF ELEVATIONS					
CAP	"A"	"B"	"C"	"D"	---
	609.550	608.202	614.283	613.665	---
WINGWALLS	"F"	"G"	"H"	"I"	---
	609.294	607.959	614.027	613.422	---
TOP OF DS	DS 1	DS 2	DS 3	DS 4	DS 5
	605.782	606.078	606.375	606.672	606.968
SHAFT TIP	580.782	581.078	581.375	581.672	581.968
AS-BUILT SHAFT TIP					

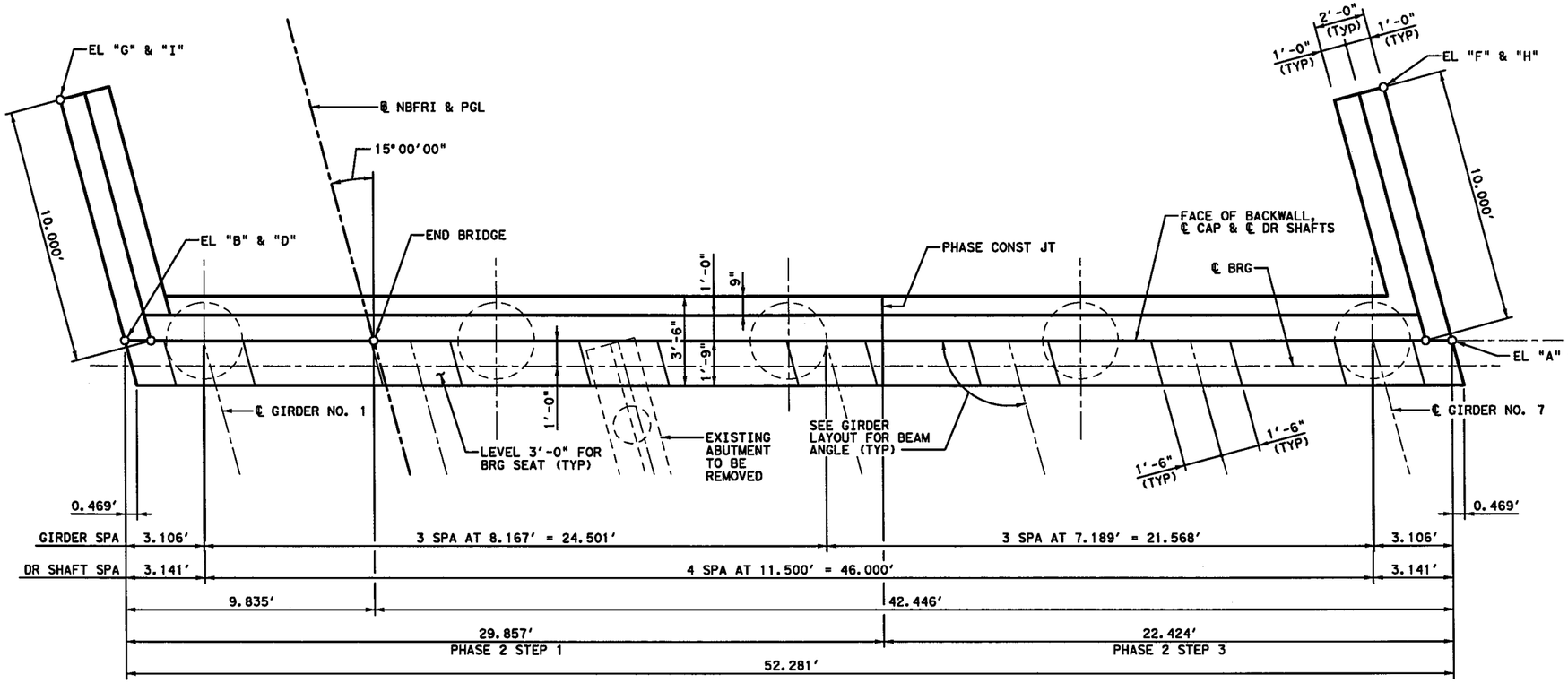

PLAN

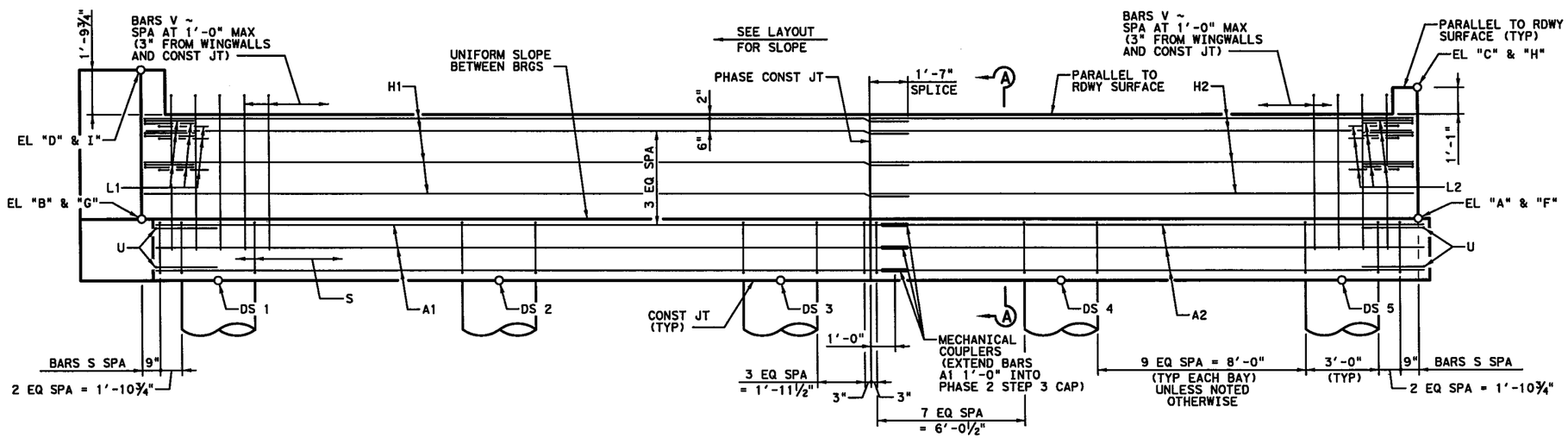

ELEVATION

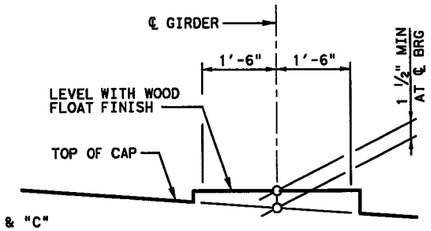

BEARING SEAT DETAIL

(BEARING SURFACE SHALL BE CLEAN AND FREE OF ALL LOOSE MATERIAL BEFORE PLACING BEARING PAD)

GENERAL NOTES:

1. DESIGNED ACCORDING TO AASHTO LRFD BRIDGE DESIGN SPECIFICATIONS, 5TH EDITION (2010).
2. CLASS "C" (HPC) CONCRETE STRENGTH F'C = 3,600 PSI.
3. ALL CAP AND WALL REINFORCING SHALL BE GRADE 60.
4. SEE FD STANDARD FOR ALL FOUNDATION DETAILS AND NOTES.
5. SEE RAIL STANDARD FOR RAIL ANCHORAGE IN WINGWALLS.
6. CALCULATED FOUNDATION LOADS: CAP DRILLED SHAFTS = 100 TONS / D.S.

STATE OF TEXAS
TIMOTHY J. ROSS
98465
LICENSED
PROFESSIONAL ENGINEER
7/6/12

HL 93 LOADING

PESC P.E. Structural Consultants, Inc.
www.PEStructural.com
TBPE Firm No. F-1475

Texas Department of Transportation
© 2012

IH 35W FROM NORTH TARRANT PKWY TO IH 820

ABUTMENT NO. 4

NB FRONTAGE RD
OVER BIG FOSSIL CK

SCALE: NTS SHEET 1 OF 2

DESIGN	FED.RD. DIV.NO.	FEDERAL AID PROJECT NO.		HIGHWAY NO.
TJR	6	(SEE TITLE SHEET)		IH 35W
GRAPHICS TLS	STATE	DISTRICT	COUNTY	SHEET NO.
CHECK NRR	TEXAS	FTW	TARRANT	1657
CHECK AB	CONTROL	SECTION	JOB	
	0014	16	255, ETC.	

DRAWING DATE: 7/13/2012 FILENAME: S3BBR#BFC-NBFR#ABH03.dgn

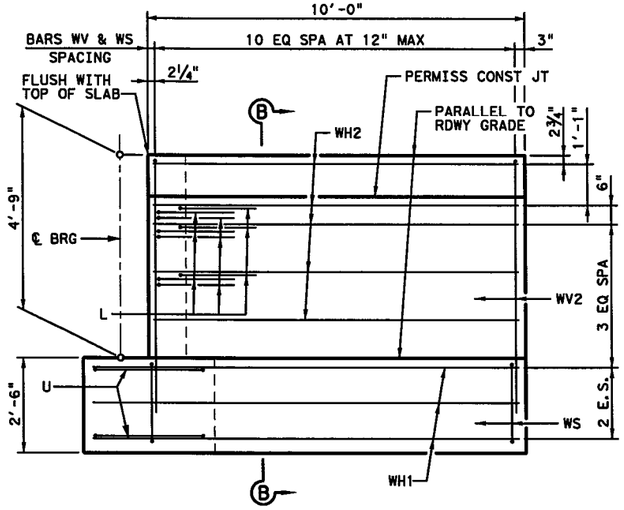

PHASE 2 STEP 3 WINGWALL ELEVATION

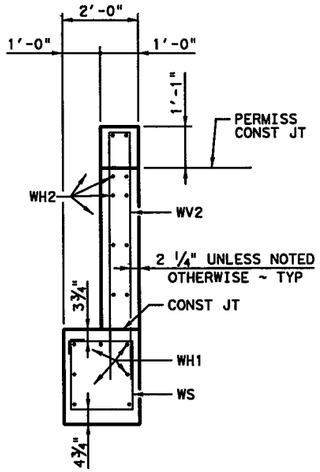

SECTION B-B

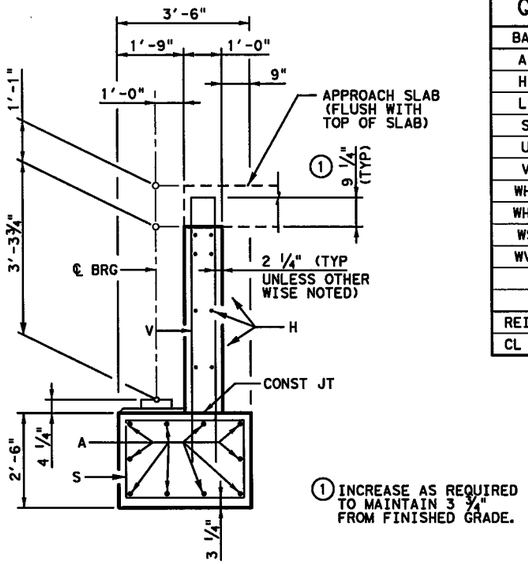

① INCREASE AS REQUIRED TO MAINTAIN 3 ¾" FROM FINISHED GRADE.

SECTION A-A

TABLE OF ESTIMATED QUANTITIES ~ PH 2 STEP 1

BAR	NO.	SIZE	LENGTH	WEIGHT
A1	10	#11	30'-5"	1,616
H1	8	#6	31'-3"	376
L1	9	#6	4'-0"	54
S	26	#5	11'-4"	307
U	2	#6	8'-1"	24
V	30	#5	12'-0"	375
WH1	7	#6	11'-5"	120
WH2	12	#6	9'-8"	174
WS	11	#4	7'-8"	56
WV1	11	#5	13'-9"	158
REINFORCING STEEL			LB	3,260
CL C CONC (HPC) (ABUT)			CY	17.3

TABLE OF ESTIMATED QUANTITIES ~ PH 2 STEP 3

BAR	NO.	SIZE	LENGTH	WEIGHT
A2	10	#11	21'-11"	1,164
H2	8	#6	22'-5"	269
L2	9	#6	4'-0"	54
S	20	#5	11'-4"	236
U	2	#6	8'-1"	24
V	23	#5	12'-0"	288
WH1	7	#6	11'-5"	120
WH2	10	#6	9'-8"	145
WS	11	#4	7'-8"	56
WV2	11	#5	12'-3"	141
REINFORCING STEEL			LB	2,497
CL C CONC (HPC) (ABUT)			CY	13.5

THE FRONT AND BACK, BACKWALL FACES, SIDES, AND TOP, EXCEPT UNDER BEARING AREAS, SHALL BE TREATED WITH A "CLASS II, TYPE I PENETRATING CONCRETE SURFACE TREATMENT".

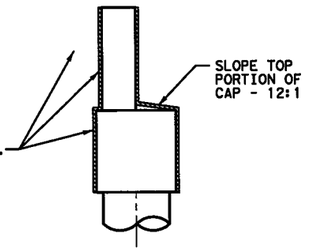

CONCRETE SURFACE TREATMENT DETAIL FOR ABUTMENT

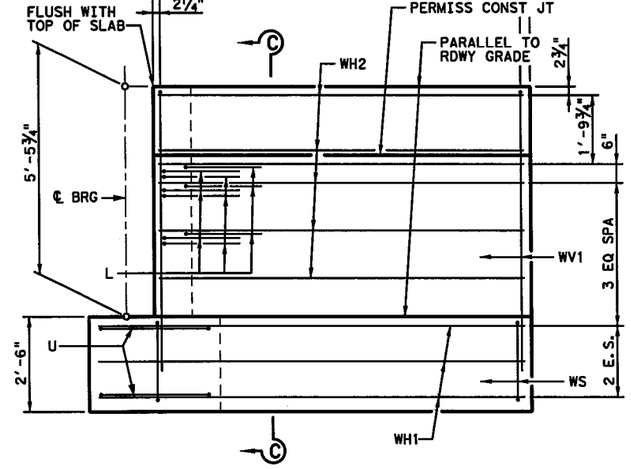

PHASE 2 STEP 1 WINGWALL ELEVATION

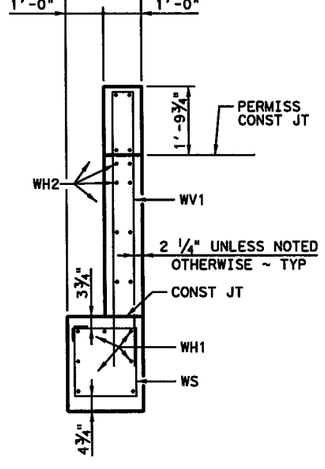

SECTION C-C

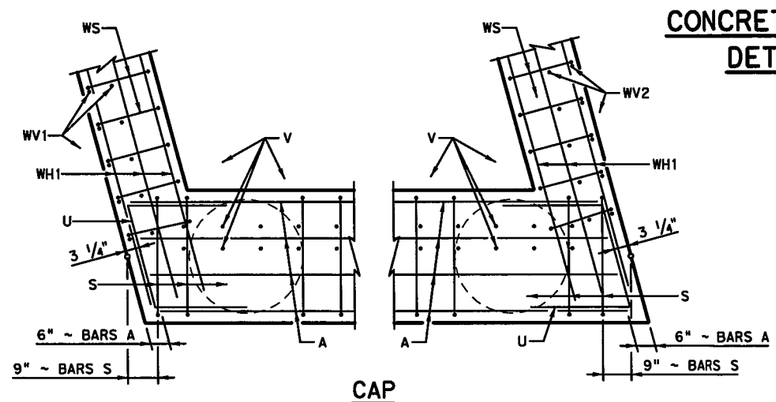

CAP

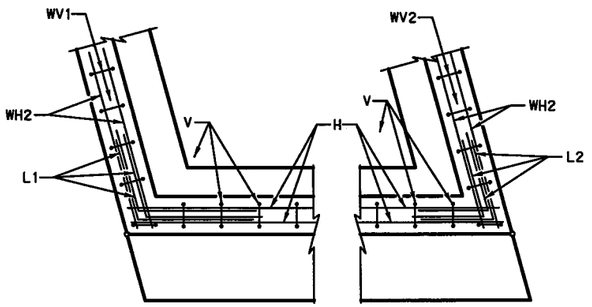

BACKWALL

WINGWALL DETAILS

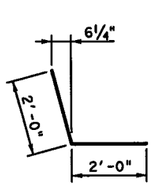

BARS L1

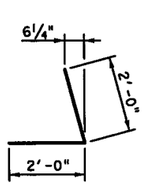

BARS L2

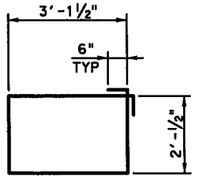

BARS S

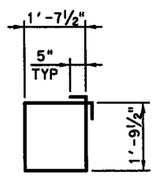

BARS WS

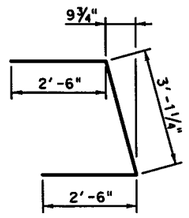

BARS U

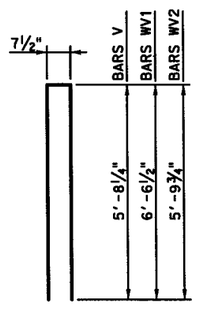

BARS V & WV

CORNER DETAILS

HL 93 LOADING

PESC P.E. Structural Consultants, Inc. www.PEStructural.com TBPE Firm No. F-1475

Texas Department of Transportation

© 2012

IH 35W FROM NORTH TARRANT PKWY TO IH 820

ABUTMENT NO. 4

NB FRONTAGE RD

OVER BIG FOSSIL CK

SCALE: NTS — SHEET 2 OF 2

DESIGN	FED.RD. DIV.NO.	FEDERAL AID PROJECT NO.		HIGHWAY NO.
TJR	6	(SEE TITLE SHEET)		IH 35W
GRAPHICS	STATE	DISTRICT	COUNTY	SHEET NO.
TLS	TEXAS	FTW	TARRANT	1658
CHECK	CONTROL	SECTION	JOB	
NRR	0014	16	255, ETC.	
CHECK				
AB				

STATE OF TEXAS — TIMOTHY J. ROSS — 98465 — LICENSED PROFESSIONAL ENGINEER — 7/6/12

FILENAME: S3BBR*BFC-NBFR*AB*04.dgn

DRAWING DATE: 7/13/2012

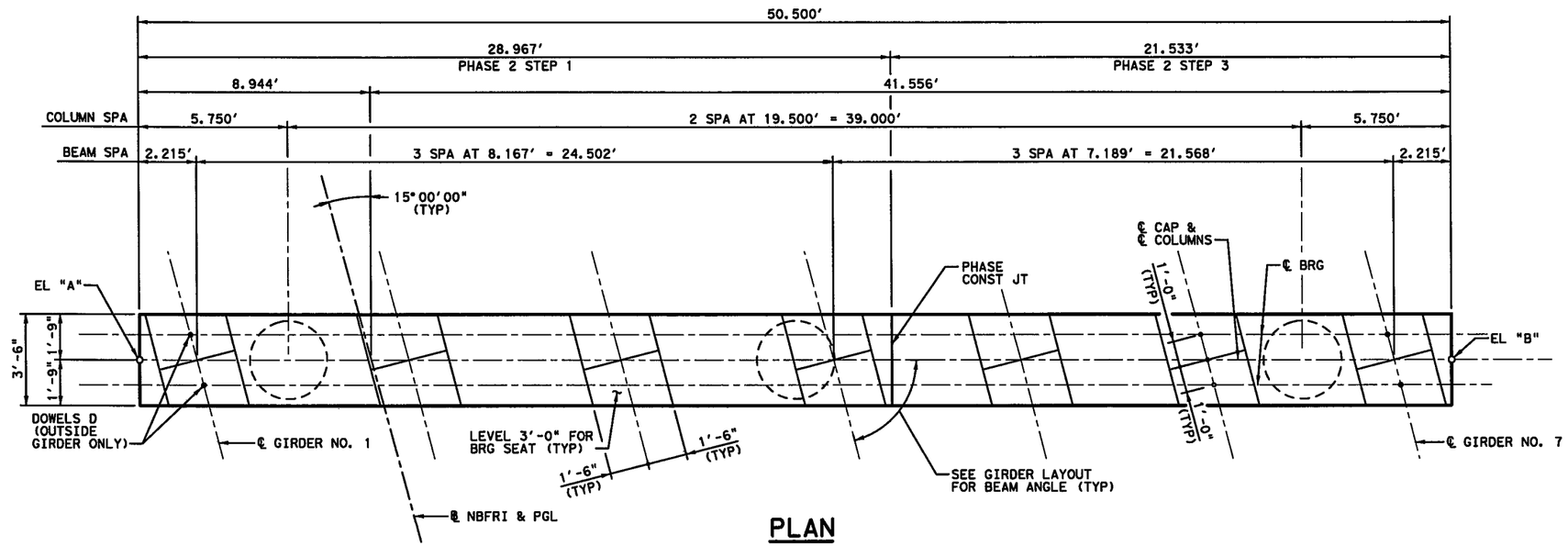

PLAN

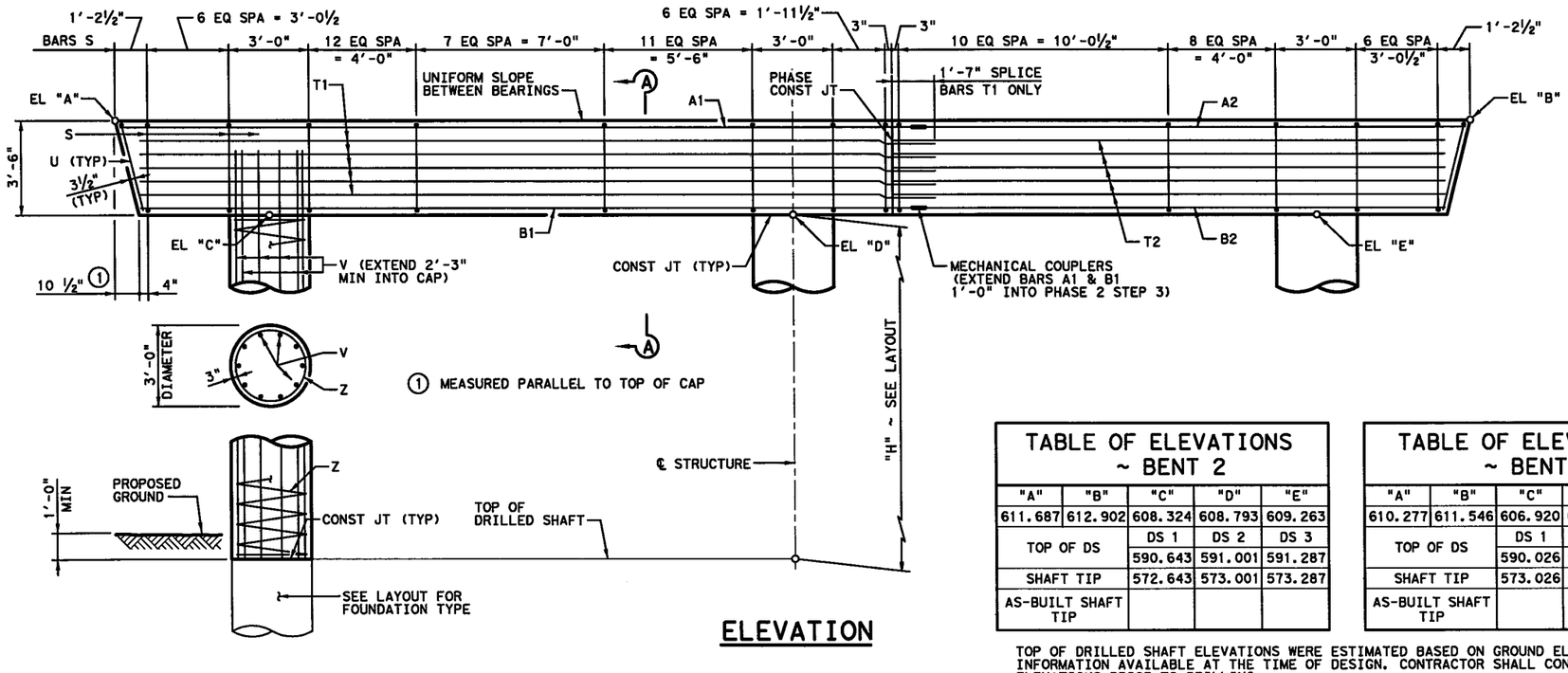

ELEVATION

GENERAL NOTES:

1. DESIGNED ACCORDING TO AASHTO LRFD BRIDGE DESIGN SPECIFICATIONS, 5TH EDITION (2010).
2. CLASS "C" (HPC) CONCRETE STRENGTH F'C = 3,600 PSI.
3. ALL CAP REINFORCING SHALL BE GRADE 60. COLUMN AND DRILLED SHAFT REINFORCING MAY BE GRADE 40.
4. SEE FD STANDARD FOR ALL FOUNDATION DETAILS AND NOTES.
5. CALCULATED FOUNDATION LOADS:
   BENT NO. 2 = 215 TONS / D.S.
   BENT NO. 3 = 245 TONS / D.S.

TABLE OF ELEVATIONS ~ BENT 2

"A"	"B"	"C"	"D"	"E"
611.687	612.902	608.324	608.793	609.263
TOP OF DS		DS 1	DS 2	DS 3
		590.643	591.001	591.287
SHAFT TIP		572.643	573.001	573.287
AS-BUILT SHAFT TIP				

TABLE OF ELEVATIONS ~ BENT 3

"A"	"B"	"C"	"D"	"E"
610.277	611.546	606.920	607.410	607.901
TOP OF DS		DS 1	DS 2	DS 3
		590.026	590.075	590.581
SHAFT TIP		573.026	573.075	573.581
AS-BUILT SHAFT TIP				

TOP OF DRILLED SHAFT ELEVATIONS WERE ESTIMATED BASED ON GROUND ELEVATION INFORMATION AVAILABLE AT THE TIME OF DESIGN. CONTRACTOR SHALL CONFIRM THESE ELEVATIONS PRIOR TO DRILLING.

STATE OF TEXAS
TIMOTHY J. ROSS
98465
LICENSED
PROFESSIONAL ENGINEER
7/6/12

HL 93 LOADING

PESC P.E. Structural Consultants, Inc.
www.PEStructural.com
TBPE Firm No. F-1475

Texas Department of Transportation
© 2012

IH 35W FROM NORTH TARRANT PKWY TO IH 820

INTERIOR BENT NO. 2 & 3

NB FRONTAGE RD

OVER BIG FOSSIL CK

SCALE: NTS — SHEET 1 OF 2

DESIGN	FED.RD. DIV.NO.	FEDERAL AID PROJECT NO.		HIGHWAY NO.
TJR	6	(SEE TITLE SHEET)		IH 35W
GRAPHICS	STATE	DISTRICT	COUNTY	SHEET NO.
TLS	TEXAS	FTW	TARRANT	
CHECK	CONTROL	SECTION	JOB	1659
NRR	0014	16	255, ETC.	
CHECK				
AB				

DRAWING DATE: 7/13/2012 FILENAME: S3BBR*BFC-NBFR*IB*01.dgn

TABLE OF ESTIMATED QUANTITIES ~ PHASE 2 STEP 1 ③

BENT	COLUMN HEIGHT "H"	BAR V 20 - #9		BAR Z 2 - #3 SPIRAL		TOTAL REINFORCING STEEL	CL C CONC (COLUMN) (HPC) (2 COLS)
NO.	(FT)	LENGTH	WEIGHT (LB)	LENGTH	WEIGHT (LB)	WEIGHT (LB)	(CY)
2	19	21' - 3"	1,445	314' - 9"	237	1,682	9.9
3	18	20' - 3"	1,377	299' - 0"	225	1,602	9.4

TOTAL ESTIMATED QUANTITIES ②④ ~ PHASE 2 STEP 1

BAR	NO.	SIZE	LENGTH	WEIGHT
A1	7	#11	29'-9"	1,106
B1	7	#11	29'-0"	1,079
D	2	1 1/4" D	1'-8"	14
E1	12	#4	5'-7" AVG	45
E2	16	#4	4'-4" AVG	46
S	45	#5	13'-6"	634
T1	10	#5	29'-4"	306
U	2	#5	9'-8"	20
REINFORCING STEEL			LB	3,250
CL C CONC (HPC) (CAP)			CY	13.1

TABLE OF ESTIMATED QUANTITIES ~ PHASE 2 STEP 3 ③

BENT	COLUMN HEIGHT "H"	BAR V 10 - #9		BAR Z 1 - #3 SPIRAL		TOTAL REINFORCING STEEL	CL C CONC (COLUMN) (HPC) (1 COLS)
NO.	(FT)	LENGTH	WEIGHT (LB)	LENGTH	WEIGHT (LB)	WEIGHT (LB)	(CY)
2	19	21' - 3"	723	314' - 9"	118	841	5.0
3	18	20' - 3"	689	299' - 0"	112	801	4.7

TOTAL ESTIMATED QUANTITIES ②⑤ ~ PHASE 2 STEP 3

BAR	NO.	SIZE	LENGTH	WEIGHT
A2	7	#11	21'-4"	793
B2	7	#11	20'-6"	762
D	2	1 1/4" D	1'-8"	14
E1	9	#4	5'-7" AVG	34
E2	12	#4	4'-4" AVG	35
S	26	#5	13'-6"	366
T2	10	#5	20'-6"	214
U	2	#5	9'-8"	20
REINFORCING STEEL			LB	2,238
CL C CONC (HPC) (CAP)			CY	9.7

② QUANTITIES SHOWN ARE FOR ONE BENT ONLY.

③ ADJUST BARS V LENGTH BY 1 FT AND BARS Z LENGTH BY 15.7398 FT FOR EACH LINEAR FOOT OF VARIATION IN "H" VALUE.

④ ADJUST REINFORCING STEEL TOTAL BY 80 LBS AND CLASS "C" CONCRETE TOTAL BY 0.5236 CY FOR EACH LINEAR FOOT OF VARIATION IN "H" VALUE.

⑤ ADJUST REINFORCING STEEL TOTAL BY 40 LBS AND CLASS "C" CONCRETE TOTAL BY 0.2618 CY FOR EACH LINEAR FOOT OF VARIATION IN "H" VALUE.

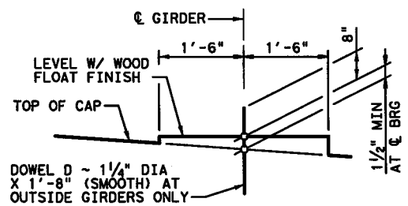

BEARING SEAT DETAIL

(HEIGHTS 3" OR LESS)

(BEARING SURFACE MUST BE CLEAN AND FREE OF ALL LOOSE MATERIAL BEFORE PLACING BEARING PAD.)

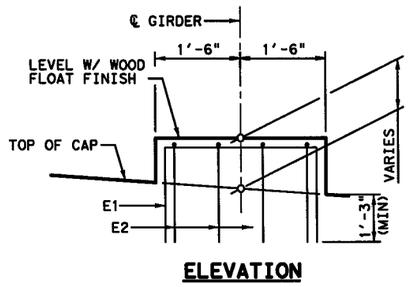

ELEVATION

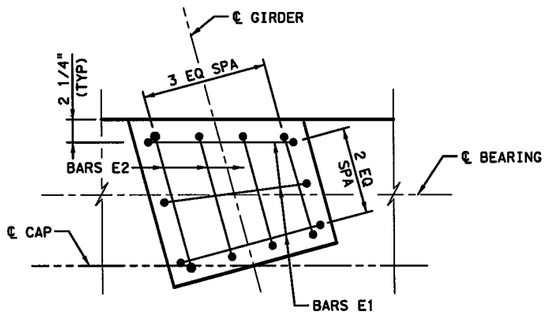

PLAN

BEARING SEAT DETAIL

(HEIGHTS OVER 3")

(BEARING SURFACE MUST BE CLEAN AND FREE OF ALL LOOSE MATERIAL BEFORE PLACING BEARING PAD.)

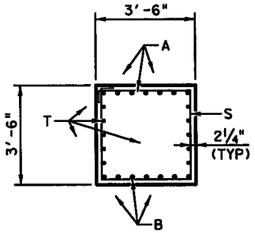

SECTION A-A

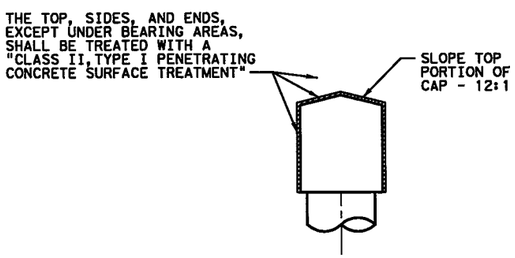

CONCRETE SURFACE TREATMENT DETAIL FOR INTERIOR BENT

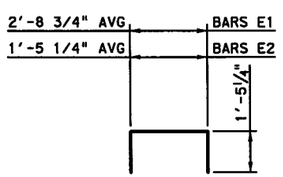

BARS E1 & E2

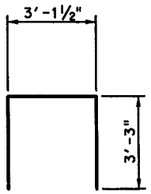

BARS U

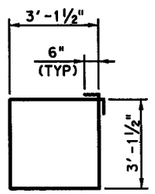

BARS S

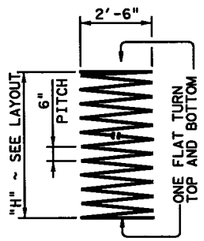

BARS Z

HL 93 LOADING

PESC P.E. Structural Consultants, Inc.
www.PEStructural.com
TBPE Firm No. F-1475

Texas Department of Transportation

© 2012

IH 35W FROM NORTH TARRANT PKWY TO IH 820

INTERIOR BENT NO. 2 & 3

NB FRONTAGE RD

OVER BIG FOSSIL CK

SCALE: NTS SHEET 2 OF 2

DESIGN	FED.RD. DIV.NO.	FEDERAL AID PROJECT NO.		HIGHWAY NO.
TJR	6	(SEE TITLE SHEET)		IH 35W
GRAPHICS TLS	STATE	DISTRICT	COUNTY	SHEET NO.
CHECK NRR	TEXAS	FTW	TARRANT	1660
CHECK AB	CONTROL	SECTION	JOB	
	0014	16	255, ETC.	

STATE OF TEXAS · TIMOTHY J. ROSS · 98465 · LICENSED PROFESSIONAL ENGINEER

7/6/12

FILENAME: S3BBR*BFC-NBFR*IB*02.dgn

DRAWING DATE: 7/13/2012

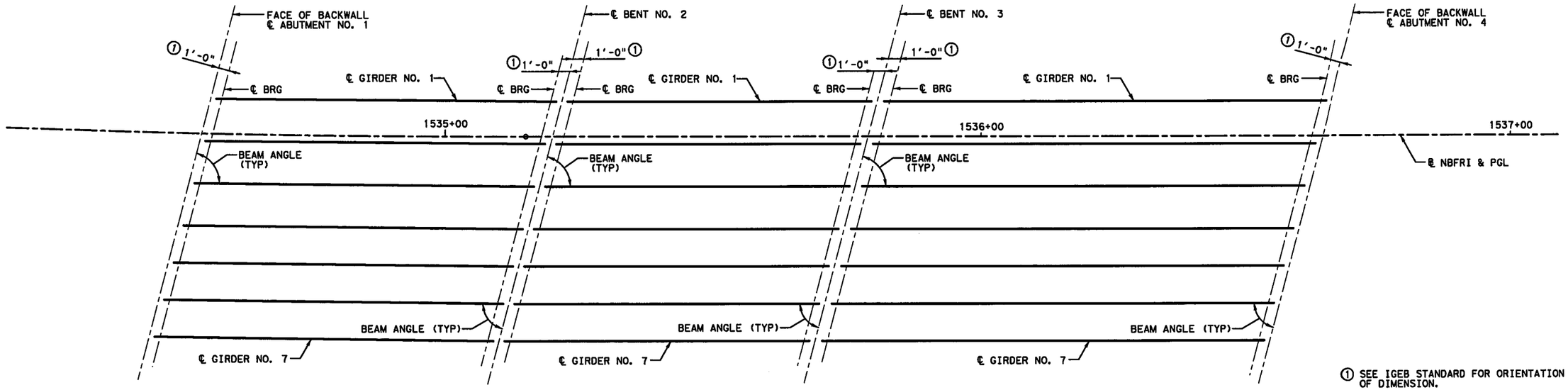

① SEE IGEB STANDARD FOR ORIENTATION OF DIMENSION.

② GIRDER LENGTHS SHOWN ARE BOTTOM GIRDER FLANGE LENGTHS WITH ADJUSTMENTS MADE FOR BEAM SLOPE.

BENT REPORT

BENT REPORT

BENT NO. 1 (S 85 36 46.33 E)
DISTANCE BETWEEN STATION LINE AND BEAM 1 6.693 L

		BEAM SPAC. (C.L. BENT)	BEAM ANGLE D M S
SPAN 1	BEAM 1	0.000	75 31 44
	BEAM 2	8.123	75 33 57
	BEAM 3	8.122	75 36 15
	BEAM 4	8.121	75 38 36
	BEAM 5	7.146	75 40 43
	BEAM 6	7.147	75 42 49
	BEAM 7	7.146	75 44 55
	TOTAL	45.806	

BENT NO. 2 (S 85 36 46.33 E)
DISTANCE BETWEEN STATION LINE AND BEAM 1 6.729 L

		BEAM SPAC. (C.L. BENT)	BEAM ANGLE D M S
SPAN 1	BEAM 1	0.000	75 31 44
	BEAM 2	8.167	75 33 57
	BEAM 3	8.167	75 36 15
	BEAM 4	8.167	75 38 36
	BEAM 5	7.188	75 40 43
	BEAM 6	7.188	75 42 49
	BEAM 7	7.187	75 44 55
	TOTAL	46.065	
SPAN 2	BEAM 1	0.000	75 0 0
	BEAM 2	8.167	75 0 0
	BEAM 3	8.167	75 0 0
	BEAM 4	8.167	75 0 0
	BEAM 5	7.188	75 0 1
	BEAM 6	7.188	75 0 6
	BEAM 7	7.187	75 0 16
	TOTAL	46.065	

BENT NO. 3 (S 85 36 46.33 E)
DISTANCE BETWEEN STATION LINE AND BEAM 1 6.729 L

		BEAM SPAC. (C.L. BENT)	BEAM ANGLE D M S
SPAN 2	BEAM 1	0.000	75 0 0
	BEAM 2	8.167	75 0 0
	BEAM 3	8.167	75 0 0
	BEAM 4	8.167	75 0 0
	BEAM 5	7.189	75 0 1
	BEAM 6	7.190	75 0 6
	BEAM 7	7.190	75 0 16
	TOTAL	46.070	
SPAN 3	BEAM 1	0.000	75 0 0
	BEAM 2	8.167	75 0 0
	BEAM 3	8.167	75 0 0
	BEAM 4	8.167	75 0 0
	BEAM 5	7.189	75 0 0
	BEAM 6	7.189	75 0 0
	BEAM 7	7.189	75 0 0
	TOTAL	46.070	

BENT NO. 4 (S 85 36 46.33 E)
DISTANCE BETWEEN STATION LINE AND BEAM 1 6.729 L

		BEAM SPAC. (C.L. BENT)	BEAM ANGLE D M S
SPAN 3	BEAM 1	0.000	74 69 0
	BEAM 2	8.167	74 69 0
	BEAM 3	8.167	74 69 0
	BEAM 4	8.167	74 69 0
	BEAM 5	7.189	74 69 0
	BEAM 6	7.189	74 69 0
	BEAM 7	7.189	74 69 0
	TOTAL	46.070	

BEAM REPORT

BEAM REPORT, SPAN 1

	HORIZONTAL DISTANCE C-C BENT	C-C BRG.	TRUE DISTANCE BOT. BM. FLG.②	BEAM SLOPE
BEAM 1	65.508	63.475	65.01	-0.0169
BEAM 2	65.497	63.464	65.00	-0.0168
BEAM 3	65.485	63.453	64.99	-0.0166
BEAM 4	65.474	63.442	64.97	-0.0164
BEAM 5	65.464	63.432	64.96	-0.0163
BEAM 6	65.453	63.422	64.95	-0.0161
BEAM 7	65.443	63.412	64.94	-0.0160

BEAM REPORT, SPAN 2

	HORIZONTAL DISTANCE C-C BENT	C-C BRG.	TRUE DISTANCE BOT. BM. FLG.②	BEAM SLOPE
BEAM 1	59.000	57.000	58.51	-0.0209
BEAM 2	59.000	57.000	58.51	-0.0208
BEAM 3	59.000	57.000	58.51	-0.0206
BEAM 4	59.000	57.000	58.51	-0.0205
BEAM 5	59.000	57.000	58.51	-0.0204
BEAM 6	58.999	56.999	58.51	-0.0202
BEAM 7	58.999	56.999	58.51	-0.0201

BEAM REPORT, SPAN 3

	HORIZONTAL DISTANCE C-C BENT	C-C BRG.	TRUE DISTANCE BOT. BM. FLG.②	BEAM SLOPE
BEAM 1	85.000	82.965	84.52	-0.0245
BEAM 2	85.000	82.965	84.52	-0.0245
BEAM 3	85.000	82.965	84.52	-0.0244
BEAM 4	85.000	82.965	84.52	-0.0244
BEAM 5	85.000	82.965	84.52	-0.0243
BEAM 6	85.000	82.965	84.52	-0.0242
BEAM 7	85.000	82.965	84.52	-0.0242

HL 93 LOADING

PESC
P.E. Structural Consultants, Inc.
www.PEStructural.com
TBPE Firm No. F-1475

Texas Department of Transportation
© 2012

IH 35W FROM NORTH TARRANT PKWY TO IH 820

GIRDER LAYOUT (SPANS 1-3)

NB FRONTAGE RD

OVER BIG FOSSIL CK

SCALE: NTS SHEET 1 OF 1

DESIGN	FED.RD. DIV.NO.	FEDERAL AID PROJECT NO.		HIGHWAY NO.
TJR	6	(SEE TITLE SHEET)		IH 35W
GRAPHICS TLS	STATE	DISTRICT	COUNTY	SHEET NO.
CHECK NRR	TEXAS	FTW	TARRANT	
CHECK AB	CONTROL	SECTION	JOB	1661
	0014	16	255, ETC.	

DRAWING DATE: 7/13/2012 FILENAME: S3BBR*BFC-NBFR*GF*01.dgn

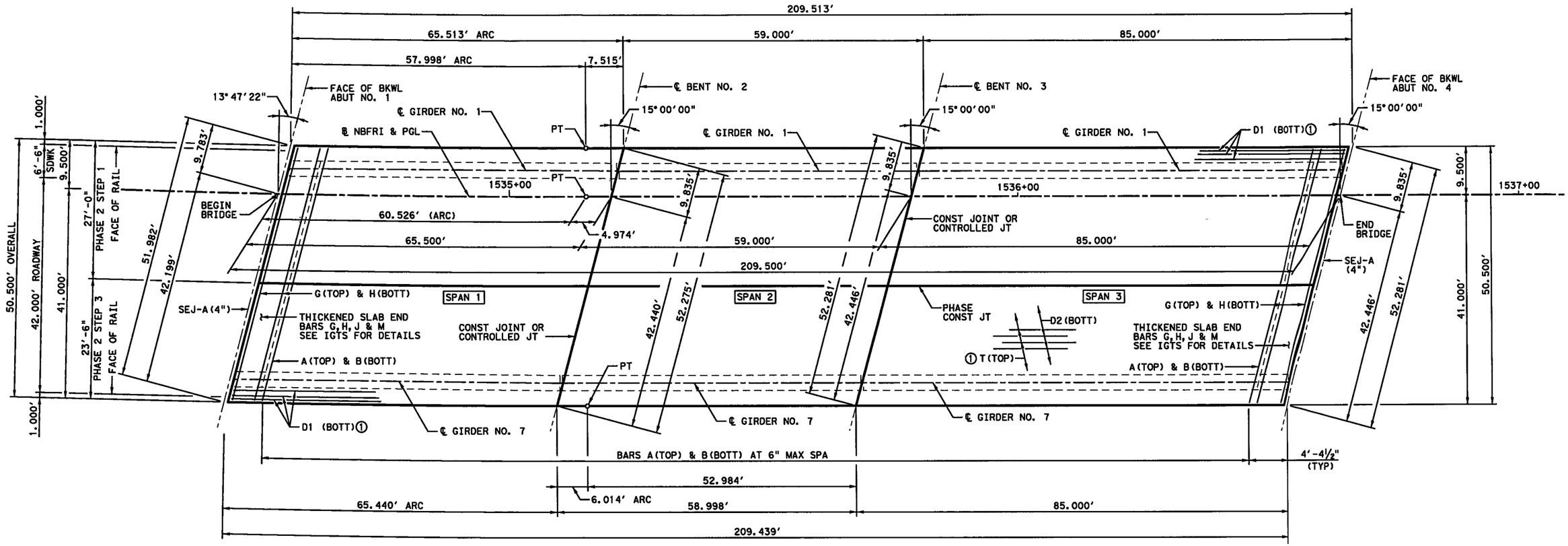

PLAN

① 2" END COVER ON BARS D1 AND T.

HL 93 LOADING

PESC P.E. Structural Consultants, Inc.
www.PEStructural.com
TBPE Firm No. F-1475

Texas Department of Transportation
© 2012

IH 35W FROM NORTH TARRANT PKWY TO IH 820

209.50' PRESTRESSED CONCRETE I-GIRDER UNIT

NB FRONTAGE RD
OVER BIG FOSSIL CK

SCALE: NTS — SHEET 1 OF 2

DESIGN	FED. RD. DIV. NO.	FEDERAL AID PROJECT NO.		HIGHWAY NO.
TJR	6	(SEE TITLE SHEET)		IH 35W
GRAPHICS	STATE	DISTRICT	COUNTY	SHEET NO.
TLS	TEXAS	FTW	TARRANT	
CHECK	CONTROL	SECTION	JOB	1662
NRR				
CHECK	0014	16	255, ETC.	
AB				

DRAWING DATE: 7/13/2012 FILENAME: S3BBR*BFC-NBFR*PB*01.dgn

TABLE OF ESTIMATED QUANTITIES PHASE 2 STEP 1

SPAN	REINF CONC SLAB	PRESTR CONC I-GIRDERS (TX40) ④	CL S CONC (HPC)	CL S CONC (HPC) (BRIDGE SDWLK)	REINFORCING STEEL ③
NO.	SF	LF	CY	CY	LB
1	1,768	259.97	50.2	1.8	11,493
2	1,593	234.04	44.8	1.6	10,355
3	2,295	338.08	67.0	2.3	14,918
TOTAL	5,656	832.09	162.0	5.7	36,766

③ REINFORCING STEEL WEIGHT IS CALCULATED USING AN APPROXIMATE FACTOR OF 6.5 LBS PER SQ FT FOR BRIDGE DECK AND 1.7 LBS PER SQ FT FOR SIDEWALK.

④ LENGTHS SHOWN ARE BOTTOM OF GIRDER FLANGE LENGTHS WITH ADJUSTMENTS MADE FOR BEAM SLOPE. SEE GIRDER LAYOUT FOR GIRDER LENGTHS.

TABLE OF ESTIMATED QUANTITIES PHASE 2 STEP 3A

SPAN	REINF CONC SLAB	PRESTR CONC I-GIRDERS (TX40) ④	CL S CONC (HPC)	REINFORCING STEEL ③
NO.	SF	LF	CY	LB
1	1,538	194.85	43.7	10,000
2	1,386	175.53	38.8	9,012
3	1,998	253.56	58.1	12,984
TOTAL	4,922	623.94	140.6	31,996

TABLE OF EST QTYS PHASE 2 STEP 3B

SPAN	CL S CONC (HPC) (SDWLK) ④	REINFORCING STEEL ③
NO.	CY	LB
1	9.7	727
2	8.7	654
3	12.6	943
TOTAL	31.1	2,324

SPAN NO.	GIRDER NO.	"A" FT	"B" FT
1	1, 5, 6	0.028	0.036
	2 & 3	0.032	0.041
	4	0.031	0.039
	7	0.028	0.035
2	1, 5, 6	0.019	0.024
	2 & 3	0.021	0.027
	4	0.020	0.025
	7	0.017	0.022
3	1	0.086	0.109
	2 & 3	0.097	0.123
	4	0.091	0.116
	5 & 6	0.087	0.110
	7	0.081	0.103

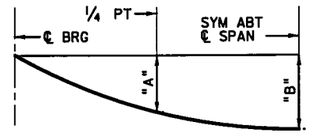

DEAD LOAD DEFLECTION DIAGRAM

CALCULATED DEFLECTIONS SHOWN ARE DUE TO THE CONCRETE SLAB ON INTERIOR GIRDERS ONLY (EC = 5000 KSI). ADJUST VALUES AS REQUIRED FOR EXTERIOR GIRDERS AND IF OPTIONAL SLAB FORMING IS USED. THESE VALUES MAY REQUIRE FIELD VERIFICATION.

TABLE OF SECTION DEPTHS

SPAN NO.	GIRDER NO.	"X" AT ℄ BRG	"Y" AT ℄ BRG	②"Z" AT ℄ SPAN
1	1	11"	4'-3"	9 5/8"
	2 & 3	11"	4'-3"	9 ½"
	4-6	11"	4'-3"	9 7/8"
	7	11"	4'-3"	10 ⅛"
2	1-3	10 ½"	4'-2 ½"	9 ½"
	4-6	10 ½"	4'-2 ½"	9 ¾"
	7	10 ½"	4'-2 ½"	9 5/8"
3	1 & 2	1'- ¾"	4'-4 ¾"	9 ½"
	3	1'- ¾"	4'-4 ¾"	9 5/8"
	4-6	1'- ¾"	4'-4 ¾"	10"
	7	1'- ¾"	4'-4 ¾"	10 ⅛"

② THEORETICAL DIMENSION

BAR TABLE

BAR	SIZE
A	#5
B	#5
D	#5
G	#5
H	#5
J	#5
M	#5
T	#4
U	#4

GENERAL NOTES:

1. DESIGNED ACCORDING TO AASHTO LRFD BRIDGE DESIGN SPECIFICATIONS, 5TH EDITION (2010).
2. CLASS "S"(HPC) CONCRETE STRENGTH F'C = 4,000 PSI.
3. ALL REINFORCING SHALL BE GRADE 60 AND EPOXY COATED.
4. SEE PCP OR PMDF STANDARDS FOR DETAILS AND QUANTITY ADJUSTMENTS IF EITHER OF THESE OPTIONS ARE USED.
5. SEE IGTS STANDARD FOR THICKENED SLAB END DETAILS.
6. SEE IGMS STANDARD FOR MISCELLANEOUS SLAB DETAILS.
7. SEE RAIL STANDARD FOR RAIL ANCHORAGE IN SLAB.
8. BAR LAPS, WHERE REQUIRED, TO BE AS FOLLOWS:
   #4 = 2'-1"
   #5 = 2'-7"
9. SEE ITS SHEETS FOR SUSPENDED CONDUIT INFORMATION AND DETAILS.
10. THE BEAM LOCATED UNDER THE PHASE CONSTR JT LINE WILL HAVE LESS DEAD LOAD DEFLECTION THAN THE OTHER BEAMS CONSTRUCTED AT THE SAME TIME. THIS BEAM WILL NOT DEFLECT ADDITIONALLY WHEN THE REMAINDER OF THE SLAB IS CAST. DUE TO COMPOSITE ACTION ON THE DECK SYSTEM. PRIOR TO COLUMN CONSTRUCTION, CONTRACTOR SHALL PROPOSE BEARING SEAT AND/OR COLUMN ELEVATIONS ADJUSTMENTS TO COMPENSATE FOR THIS ACTION, IF NECESSARY, MAINTAINING SPECIFIED DECK SECTION AND COVER OF DECK REINFORCEMENT. SUBMIT PROPOSAL TO ENGINEER FOR REVIEW AND ACCEPTANCE.

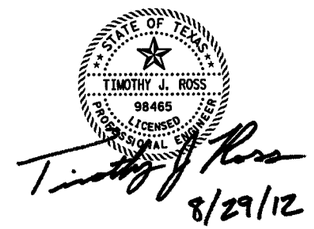

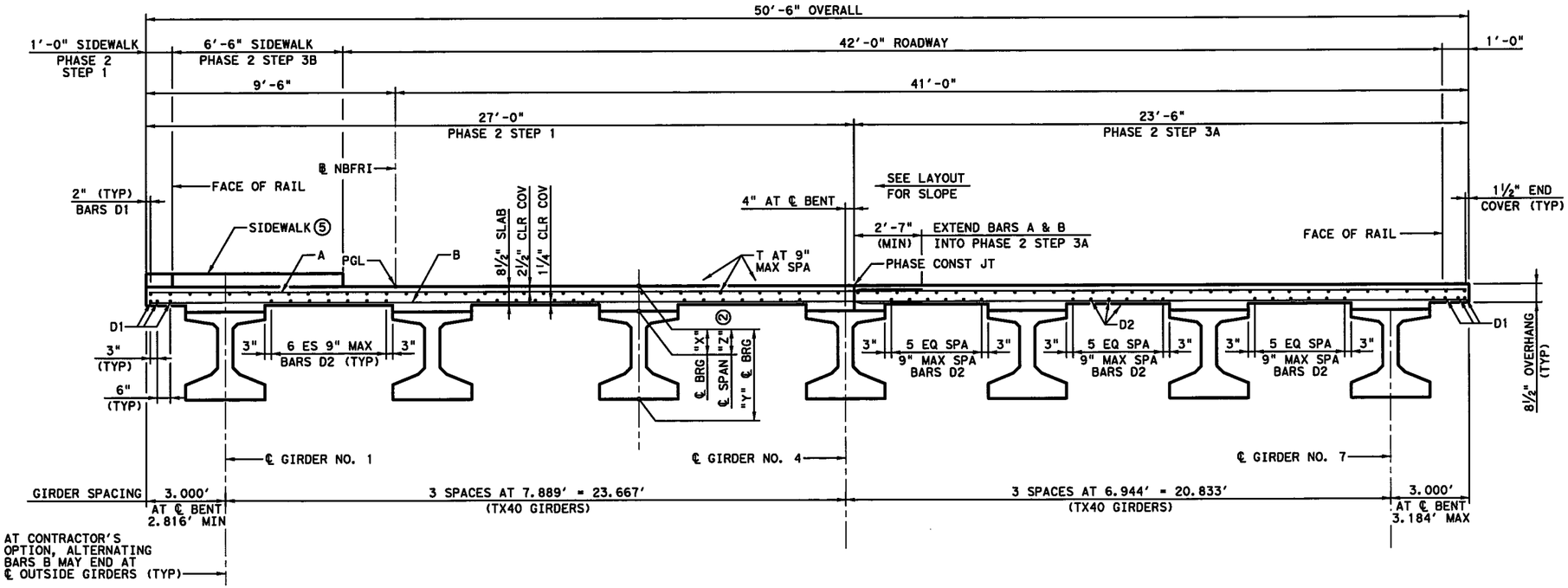

⑤ SEE BRSM (MOD) STANDARD FOR DETAILS & INFORMATION NOT SHOWN.

TYPICAL TRANSVERSE SECTION

HL 93 LOADING

P.E. Structural Consultants, Inc.
www.PEStructural.com
TBPE Firm No. F-1475

Texas Department of Transportation
© 2012

IH 35W FROM NORTH TARRANT PKWY TO IH 820

209.50' PRESTRESSED CONCRETE I-GIRDER UNIT

NB FRONTAGE RD

OVER BIG FOSSIL CK

SCALE: NTS — SHEET 2 OF 2

DESIGN	FED. RD. DIV. NO.	FEDERAL AID PROJECT NO.		HIGHWAY NO.
TJR	6	(SEE TITLE SHEET)		IH 35W
GRAPHICS: TLS	STATE	DISTRICT	COUNTY	SHEET NO.
CHECK: NRR	TEXAS	FTW	TARRANT	1663
CHECK: AB	CONTROL	SECTION	JOB	
	0014	16	255, ETC.	

FILENAME: S3BBR*BFC-NBFR*PB*02.dgn
DRAWING DATE: 7/13/2012

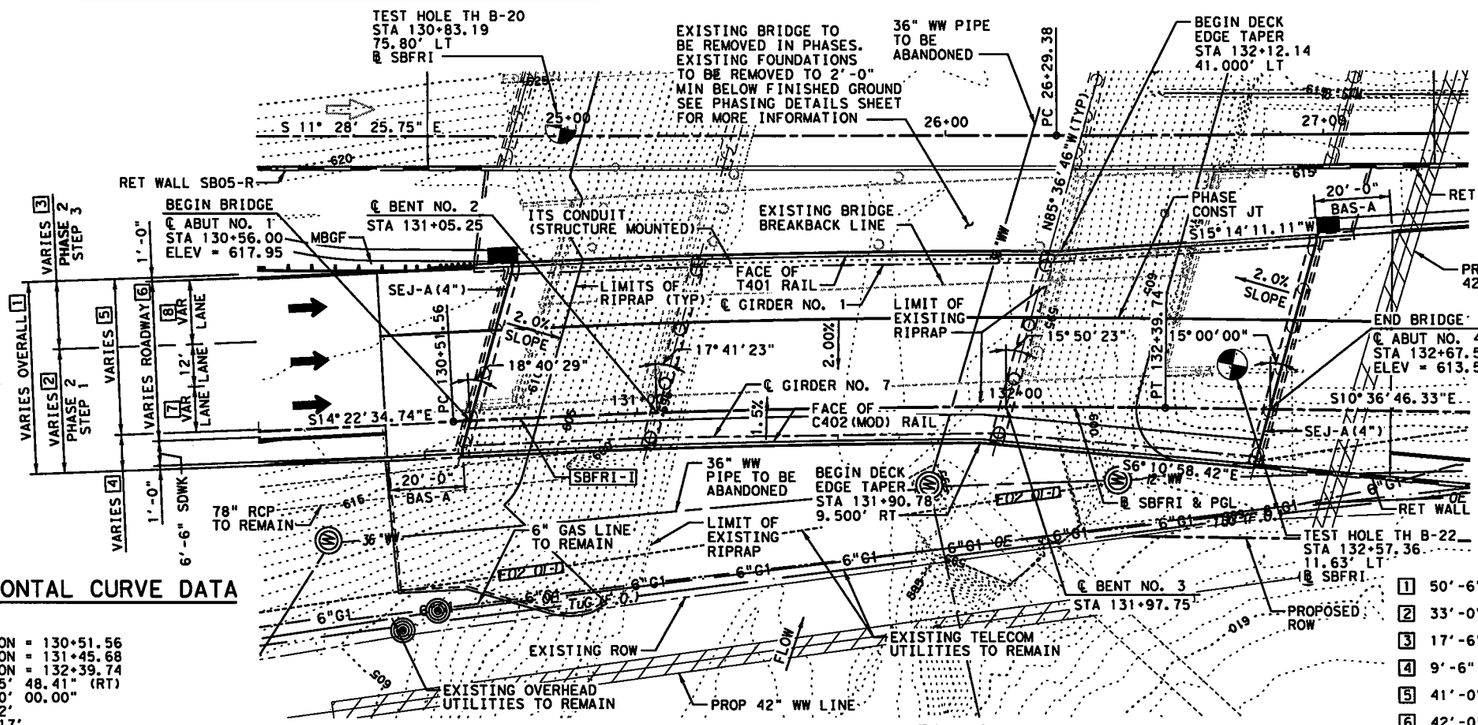

PLAN

HORIZONTAL CURVE DATA

SBFRI-I

PC STATION = 130+51.56
PI STATION = 131+45.68
PT STATION = 132+39.74
Δ = 3° 45' 48.41" (RT)
D = 2° 00' 00.00"
T = 94.12'
L = 188.17'
R = 2,864.79'

[1] 50'-6" MIN ~ 61'-10⅞" MAX
[2] 33'-0" MIN ~ 39'-0⅜" MAX
[3] 17'-6" MIN ~ 22'-10⅝" MAX
[4] 9'-6" MIN ~ 15'-6⅜" MAX
[5] 41'-0" MIN ~ 46'-4⅝" MAX
[6] 42'-0" MIN ~ 53'-6½" MAX
[7] 16'-0" MIN ~ 22'-1⅞" MAX
[8] 14'-0" MIN ~ 19'-4⅝" MAX

GENERAL NOTES:

1. DESIGNED ACCORDING TO AASHTO LRFD BRIDGE DESIGN SPECIFICATIONS, 5TH EDITION (2010).
2. ALL DIMENSIONS ARE EITHER HORIZONTAL OR VERTICAL AND MUST BE CORRECTED FOR GRADE, CROWN, AND/OR SUPERELEVATION.
3. "D" DENOTES BENTS WITH DOWEL BARS "D" AND SLOTTED HOLES AT THE ENDS OF EXTERIOR GIRDERS ONLY.
4. SEE "BORING LOGS - BRIDGE" SHEETS FOR GEOTECHNICAL INFORMATION. FOR DRILLING LOG INFORMATION RELATED TO TH B-20 AND TH B-22 REFERENCE DESIGN PLANS FOR CSJ 0041-16-211 DATED FEB 1995.
5. CONTRACTOR TO VERIFY LOCATION OF ALL UTILITIES PRIOR TO EXCAVATION.
6. THE "H" VALUES SHOWN ARE ESTIMATED COLUMN HEIGHTS. CONTRACTOR IS RESPONSIBLE FOR CALCULATING ACTUAL COLUMN HEIGHTS BASED ON FIELD CONDITIONS.
7. CONTRACTOR TO VERIFY ALL ELEVATIONS AND DIMENSIONS TO EXISTING STRUCTURES IN THE FIELD PRIOR TO COMMENCING WORK OR ORDERING MATERIALS.
8. FOR TYPICAL SECTIONS SEE "PHASING DETAILS" SHEET.
9. SEE ROADWAY PLANS FOR EXISTING RIPRAP REMOVAL. EXISTING REINFORCING IN RIPRAP SHALL REMAIN AND LAP WITH NEW REINFORCING (IF REQUIRED). SEE CRR STANDARD FOR RIPRAP REINFORCING.
10. ALLOWANCE FOR FUTURE RESURFACING: 23.3 PSF.

EXIST NBI NUMBER: 02-220-0-0014-16-461
NEW NBI NUMBER: 02-220-0-0014-16-541
FUNCTIONAL CLASS = MINOR COLLECTOR
DESIGN SPEED = 40 MPH
ADT = 29,000 (2030)

HL 93 LOADING

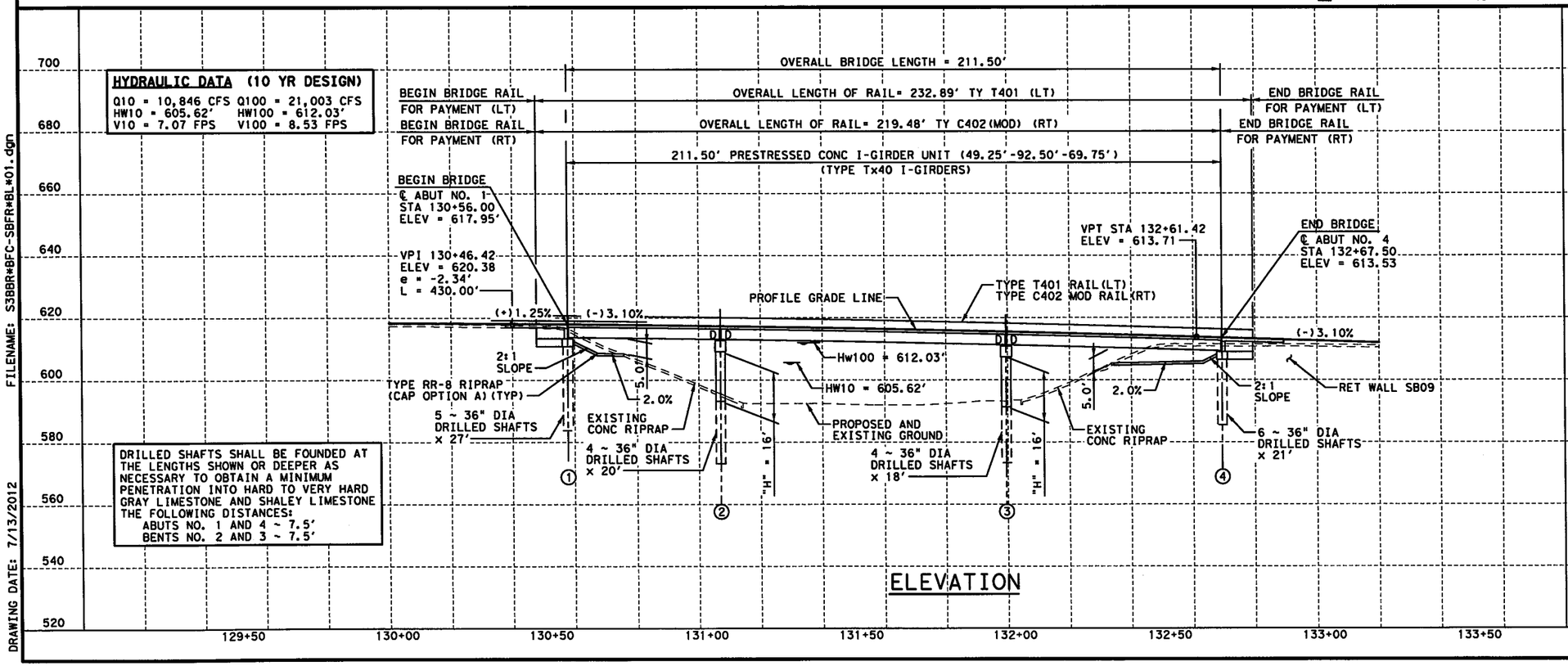

ELEVATION

FILENAME: S3BBR*BFC-SBFR*BL*01.dgn
DRAWING DATE: 7/13/2012

STATE OF TEXAS
TIMOTHY J. ROSS
98465
LICENSED
PROFESSIONAL ENGINEER
7/6/12

P.E. Structural Consultants, Inc.
www.PEStructural.com
TBPE Firm No. F-1475

Texas Department of Transportation
© 2012

IH 35W FROM NORTH TARRANT PKWY TO IH 820

BRIDGE LAYOUT

SB FRONTAGE RD

OVER BIG FOSSIL CK

SCALE: 1" = 40'

SHEET 1 OF 1

DESIGN	FED.RD. DIV.NO.	FEDERAL AID PROJECT NO.		HIGHWAY NO.
TJR	6	(SEE TITLE SHEET)		IH 35W
GRAPHICS	STATE	DISTRICT	COUNTY	SHEET NO.
TLS	TEXAS	FTW	TARRANT	
CHECK	CONTROL	SECTION	JOB	1664
NRR	0014	16	255, ETC.	
CHECK				
AB				

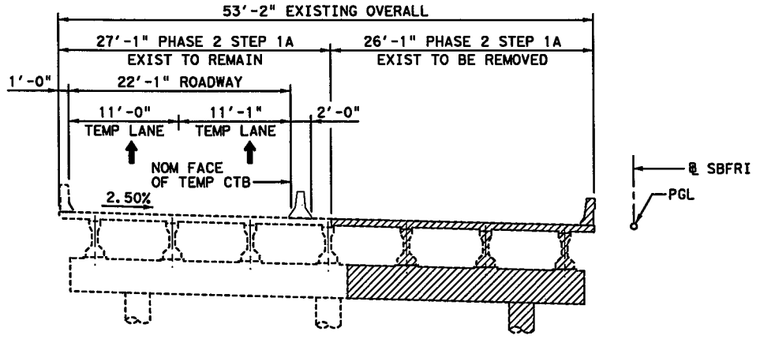

PHASE 2 STEP 1A CONSTRUCTION TYPICAL SECTION
(NTS)

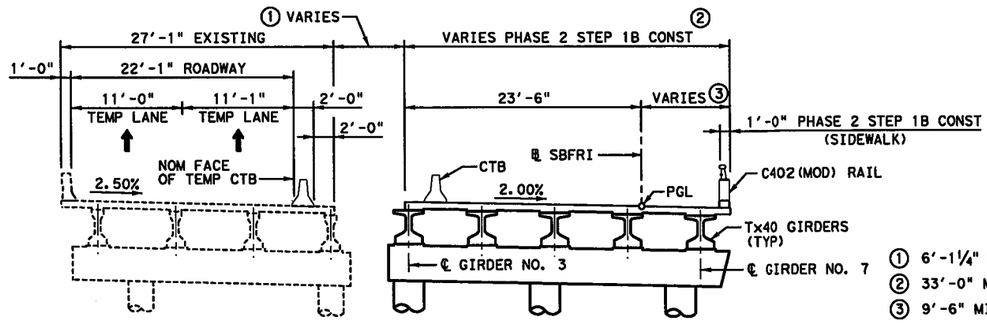

① 6'-1¼" MIN ~ 11'-5 ⅞" MAX
② 33'-0" MIN ~ 39'-0⅜" MAX
③ 9'-6" MIN ~ 15'-6⅜" MAX
④ 28'-0" MIN ~ 34'-0⅜" MAX
⑤ 16'-0" MIN ~ 22'-0⅜" MAX
⑥ 50'-6" MIN ~ 61'-10¼" MAX
⑦ 17'-6" MIN ~ 22'-10" MAX
⑧ 41'-0" MIN ~ 46'-4" MAX
⑨ 26'-0" MIN ~ 31'-4" MAX
⑩ 14'-0" MIN ~ 19'-4" MAX
⑪ 42'-0" MIN ~ 53'-5⅞" MAX
⑫ 16'-0" MIN ~ 22'-1⅞" MAX

PHASE 2 STEP 1B CONSTRUCTION TYPICAL SECTION
(NTS)

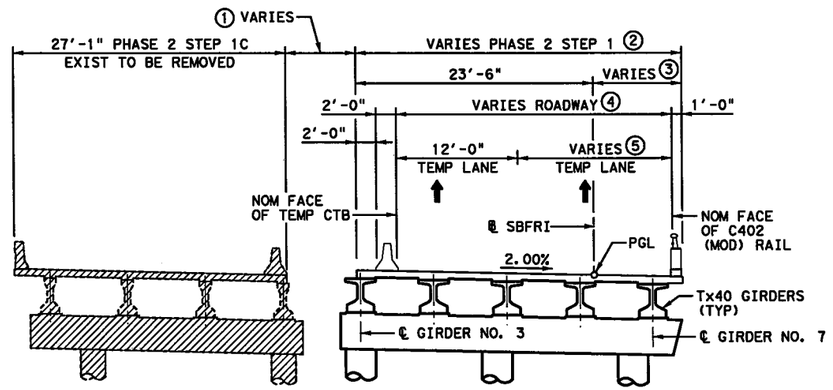

PHASE 2 STEP 1C CONSTRUCTION TYPICAL SECTION
(NTS)

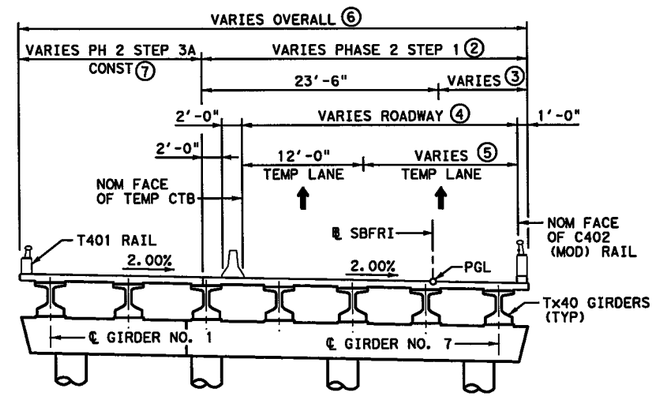

PHASE 2 STEP 3A CONSTRUCTION TYPICAL SECTION
(NTS)

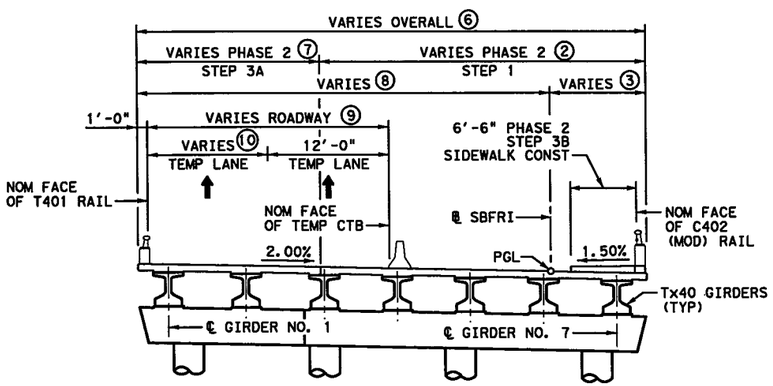

PHASE 2 STEP 3B CONSTRUCTION TYPICAL SECTION
(NTS)

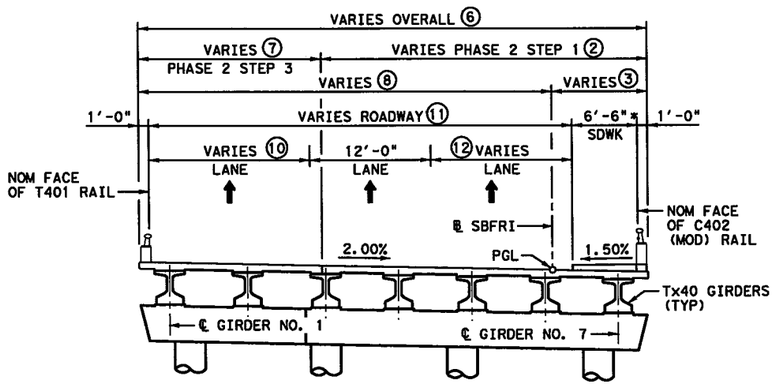

COMPLETED TYPICAL SECTION
(NTS)

* MEASURED PERPENDICULAR TO DECK EDGE

HL 93 LOADING

PESC P.E. Structural Consultants, Inc.
www.PEStructural.com
TBPE Firm No. F-1475

Texas Department of Transportation
© 2012

IH 35W FROM NORTH TARRANT PKWY TO IH 820

PHASING DETAILS

SB FRONTAGE RD
OVER BIG FOSSIL CK

SCALE: NTS — SHEET 1 OF 1

DESIGN	FED.RD. DIV.NO.	FEDERAL AID PROJECT NO.		HIGHWAY NO.
TJR	6	(SEE TITLE SHEET)		IH 35W
GRAPHICS	STATE	DISTRICT	COUNTY	SHEET NO.
TLS	TEXAS	FTW	TARRANT	
CHECK	CONTROL	SECTION	JOB	1665
NRR	0014	16	255, ETC.	
CHECK AB				

FILENAME: S3BBR*BFC-SBFR*PD*01.dgn
DRAWING DATE: 7/13/2012

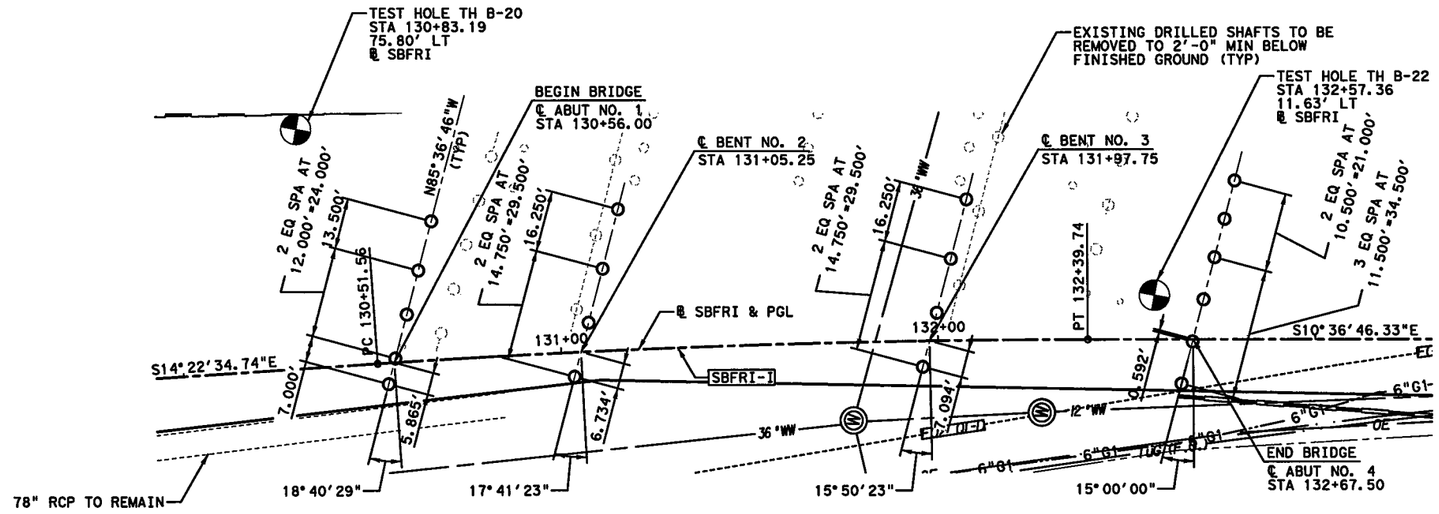

PLAN

0' 20' 40'

SCALE IN FEET

GENERAL NOTES:

1. FOR ANY TEMPORARY SHORING REQUIRED AT INTERIOR BENT LOCATIONS, FOLLOW TXDOT STANDARD SPECIFICATION ITEM 403.
2. SEE "BORING LOGS - BRIDGE" SHEETS FOR GEOTECHNICAL INFORMATION. FOR DRILLING LOG INFORMATION RELATED TO TH B-20 AND TH B-22 REFERENCE DESIGN PLANS FOR CSJ 0041-16-211 DATED FEB 1995.
3. ⊕ DENOTES TEST HOLE LOCATION.
4. CONTRACTOR TO VERIFY LOCATION OF ALL UTILITIES PRIOR TO EXCAVATION.

HORIZONTAL CURVE DATA

SBFRI-1

PC STATION = 130+51.56
PI STATION = 131+45.68
PT STATION = 132+39.74
Δ = 3° 45' 48.41" (RT)
D = 2° 00' 00.00"
T = 94.12'
L = 188.17'
R = 2,864.79'

STATE OF TEXAS
TIMOTHY J. ROSS
98465
LICENSED
PROFESSIONAL ENGINEER
7/6/12

HL 93 LOADING

PESC P.E. Structural Consultants, Inc.
www.PEStructural.com
TBPE Firm No. F-1475

Texas Department of Transportation
© 2012

IH 35W FROM NORTH TARRANT PKWY TO IH 820

FOUNDATION LAYOUT

SB FRONTAGE RD

OVER BIG FOSSIL CK

SCALE: 1" = 40' SHEET 1 OF 1

DESIGN	FED.RD. DIV.NO.	FEDERAL AID PROJECT NO.		HIGHWAY NO.
TJR	6	(SEE TITLE SHEET)		IH 35W
GRAPHICS	STATE	DISTRICT	COUNTY	SHEET NO.
TLS	TEXAS	FTW	TARRANT	1666
CHECK NRR	CONTROL	SECTION	JOB	
CHECK AB	0014	16	255, ETC.	

DRAWING DATE: 7/13/2012 FILENAME: S3BBR*BFC-SBFR*FL*01.dgn

SUMMARY OF ESTIMATED QUANTITIES

	BID ITEM	104 2009	416 2004	420 2041	420 2042	420 2256	420 2292	422 2003	425 2066	428 2002	432 2002	442 2048	450 2635	450 2636	454 2001
	BID ITEM DESCRIPTION / BRIDGE ELEMENT	REMOVING CONC (RIPRAP)	DRILL SHAFT (36 IN)	CL C CONC (HPC) (ABUT)	CL C CONC (HPC) (BENT)	CL S CONC (HPC) (APPR SLAB)	CL S CONC (HPC) (BRIDGE SDWLK)	REINF CONC SLAB (HPC) (CL S)	PRESTR CONC GIRDER (TX40)	CONC SURF TREAT (CLASS II)	RIPRAP (CONC) (5 IN)	STRUCTURAL STEEL (MISC NON - BRIDGE)	RAIL (TY C402) (MOD) (HPC)	RAIL (TY T401) (HPC)	SEALED EXPANSION JOINT (4 IN) (SEJ-A)
		SY	LF	CY	CY	CY	CY	SF	LF	SY	CY	LB	LF	LF	LF
PHASE 2 STEP 1	2 - ABUTMENTS	382	192	38.4		81				144	53				
	2 - INTERIOR BENTS		114		58.1					74					
	1 - 209.500' PRESTRESSED CONCRETE I-GIRDER UNIT (SPANS 1-3)						5.7	7,206	1046.15	839			219.5		73
	PHASE 2 STEP 1 TOTAL	382	306	38.4	58.1	81	5.7	7,206	1046.15	1,057	53	0	219.5	0.0	73
PHASE 2 STEP 3A	2 - ABUTMENTS	202	69	22.3		43				93	28				
	2 - INTERIOR BENTS		38		22.5					34					
	1 - 209.500' PRESTRESSED CONCRETE I-GIRDER UNIT (SPANS 1-3)							3,877	422.07	439				232.9	41
	PHASE 2 STEP 3A TOTAL	202	107	22.3	22.5	43	0.0	3,877	422.07	566	28	0	0.0	232.9	41
PHASE 2 STEP 3B	2 - ABUTMENTS														
	2 - INTERIOR BENTS														
	1 - 209.500' PRESTRESSED CONCRETE I-GIRDER UNIT (SPANS 1-3)						31.0			175		182			
	PHASE 2 STEP 3B TOTAL	0	0	0.0	0.0	0	31.0	0	0.00	175	0	182	0.0	0.0	0
	TOTALS	584	413	60.7	80.6	124	36.7	11,083	1,468.22	1,798	81	182	219.5	232.9	114

BEARING SEAT ELEVATIONS

	BEAM 1	BEAM 2	BEAM 3	BEAM 4	BEAM 5	BEAM 6	BEAM 7
BENT 1 (FWD)	614.121	614.000	613.880	613.758	613.637	613.514	613.392
BENT 2 (BK)	613.472	613.361	613.249	613.138	613.026	612.913	612.801
(FWD)	613.335	613.224	613.113	613.002	612.891	612.779	612.666
BENT 3 (BK)	611.460	611.363	611.265	611.168	611.071	610.973	610.875
(FWD)	611.452	611.355	611.257	611.160	611.062	610.964	610.866
BENT 4 (BK)	609.564	609.446	609.329	609.225	609.121	609.016	608.912

STATE OF TEXAS
TIMOTHY J. ROSS
98465
LICENSED
PROFESSIONAL ENGINEER

Timothy J Ross
8/29/12

HL 93 LOADING

PESC
P.E. Structural Consultants, Inc.
www.PEStructural.com
TBPE Firm No. F-1475

Texas Department of Transportation
© 2012

IH 35W FROM NORTH TARRANT PKWY TO IH 820

EST. QUANTITIES AND BEARING SEAT ELEV.

SB FRONTAGE RD

OVER BIG FOSSIL CK

SCALE: NTS

SHEET 1 OF 1

DESIGN	FED.RD. DIV.NO.	FEDERAL AID PROJECT NO.		HIGHWAY NO.
TJR	6	(SEE TITLE SHEET)		IH 35W
GRAPHICS	STATE	DISTRICT	COUNTY	SHEET NO.
TLS	TEXAS	FTW	TARRANT	
CHECK	CONTROL	SECTION	JOB	1667
NRR				
CHECK	0014	16	255, ETC.	
AB				

DRAWING DATE: 7/13/2012 FILENAME: S3BBR*BFC-SBFR*EQ*01.DGN

TABLE OF ELEVATIONS

CAP	"A"	"B"	"C"	"D"	---
	613.216	614.037	618.513	618.627	---
WINGWALLS	"F"	"G"	"H"	"I"	---
	613.310	614.146	618.607	618.736	---
TOP OF DS	DS 1	DS 2	DS 3	DS 4	DS 5
	611.468	611.258	611.072	610.886	610.777
SHAFT TIP	584.468	584.258	584.072	583.886	583.777
AS- BUILT SHAFT TIP					

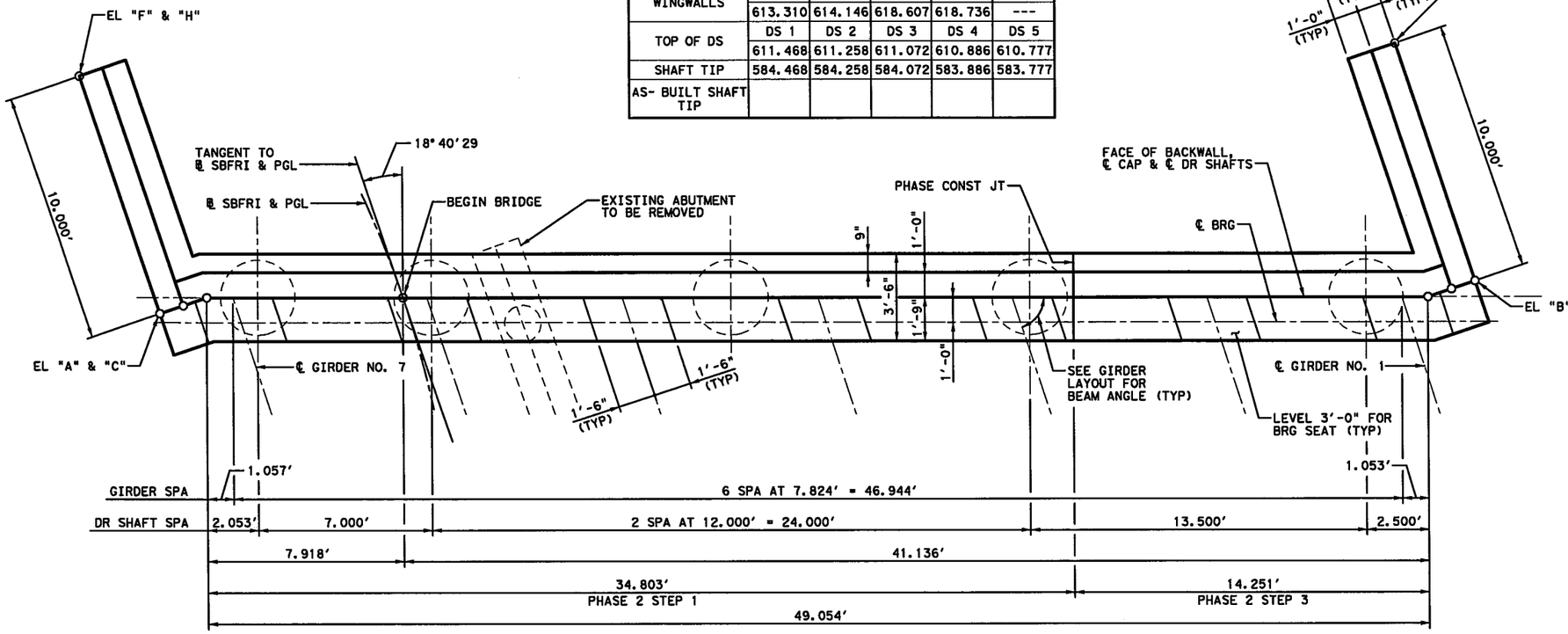

PLAN

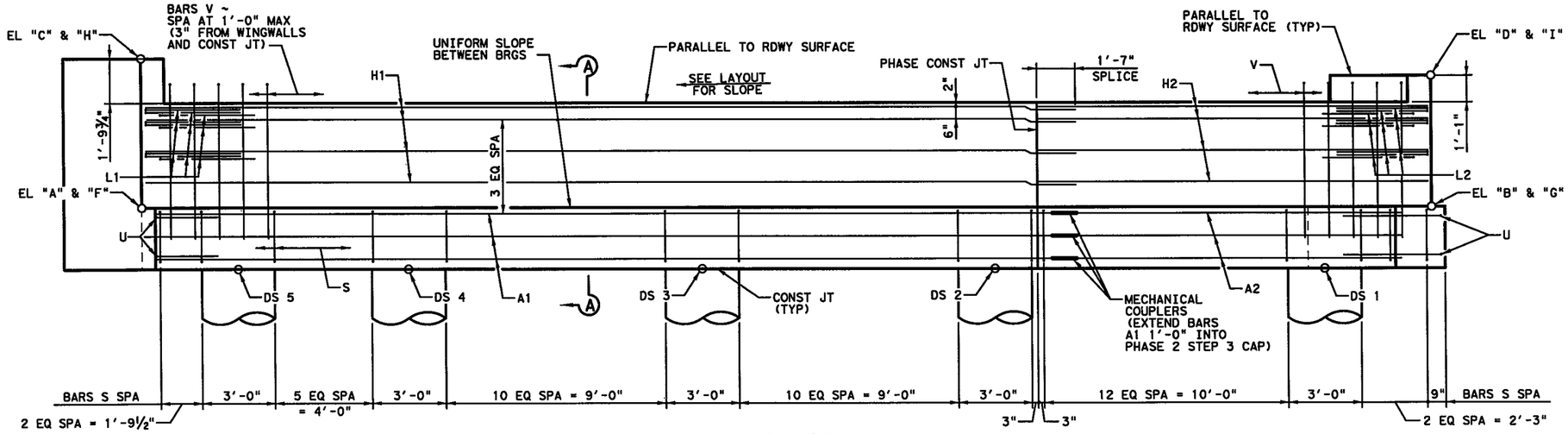

ELEVATION

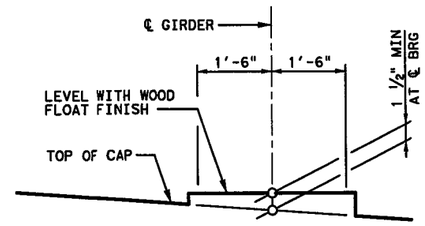

BEARING SEAT DETAIL

(BEARING SURFACE SHALL BE CLEAN AND FREE OF ALL LOOSE MATERIAL BEFORE PLACING BEARING PAD)

GENERAL NOTES:

1. DESIGNED ACCORDING TO AASHTO LRFD BRIDGE DESIGN SPECIFICATIONS, 5TH EDITION (2010).
2. CLASS "C" (HPC) CONCRETE STRENGTH F'C = 3,600 PSI.
3. ALL CAP AND WALL REINFORCING SHALL BE GRADE 60.
4. SEE FD STANDARD FOR ALL FOUNDATION DETAILS AND NOTES.
5. SEE RAIL STANDARD FOR RAIL ANCHORAGE IN WINGWALLS.
6. CALCULATED FOUNDATION LOADS:
   CAP DRILLED SHAFTS = 75 TONS / D.S.

HL 93 LOADING

P.E. Structural Consultants, Inc.
www.PEStructural.com
TBPE Firm No. F-1475

Texas Department of Transportation
© 2012

IH 35W FROM NORTH TARRANT PKWY TO IH 820

ABUTMENT NO. 1

SB FRONTAGE RD

OVER BIG FOSSIL CK

SCALE: NTS — SHEET 1 OF 2

DESIGN	FED. RD. DIV. NO.	FEDERAL AID PROJECT NO.		HIGHWAY NO.
TJR	6	(SEE TITLE SHEET)		IH 35W
GRAPHICS	STATE	DISTRICT	COUNTY	SHEET NO.
TLS	TEXAS	FTW	TARRANT	1668
CHECK NRR	CONTROL	SECTION	JOB	
CHECK AB	0014	16	255, ETC.	

FILENAME: S3BBR*BFC-SBFR*AB*01.dgn
DRAWING DATE: 7/13/2012

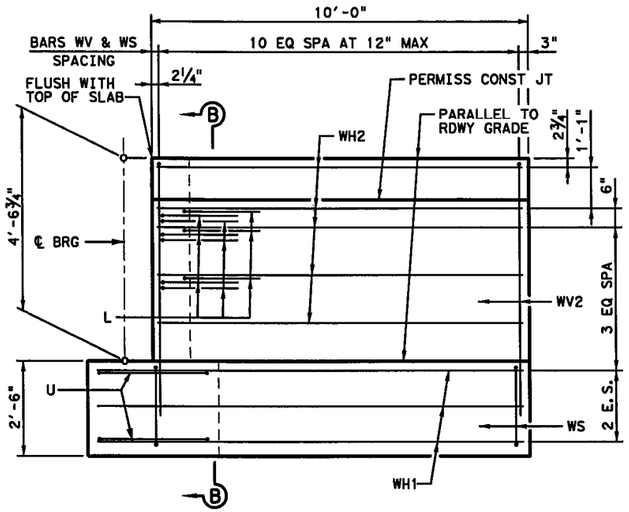

PHASE 2 STEP 3 WINGWALL ELEVATION

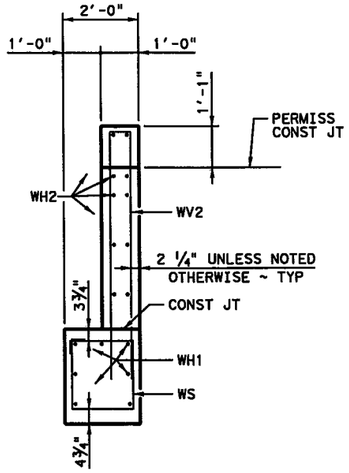

SECTION B-B

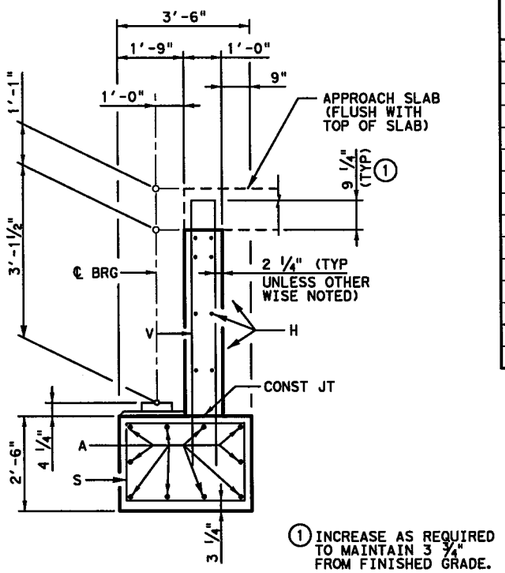

① INCREASE AS REQUIRED TO MAINTAIN 3 ¾" FROM FINISHED GRADE.

SECTION A-A

TABLE OF ESTIMATED QUANTITIES ~ PH 2 STEP 1

BAR	NO.	SIZE	LENGTH	WEIGHT
A1	10	#11	35'-10"	1,904
H1	8	#6	36'-5"	438
L1	9	#6	5'-11"	80
S	32	#5	11'-4"	378
U	2	#6	11'-7"	35
V	35	#5	11'-8"	426
WH1	7	#6	11'-5"	120
WH2	12	#6	9'-8"	174
WS	11	#4	7'-8"	56
WV1	11	#5	13'-4"	153
REINFORCING STEEL			LB	3,764
CL C CONC (HPC) (ABUT)			CY	19.5

TABLE OF ESTIMATED QUANTITIES ~ PH 2 STEP 3

BAR	NO.	SIZE	LENGTH	WEIGHT
A2	10	#11	13'-3"	704
H2	8	#6	14'-3"	171
L2	9	#6	5'-9"	78
S	16	#5	11'-4"	189
U	2	#6	11'-7"	35
V	16	#5	11'-8"	195
WH1	7	#6	11'-5"	120
WH2	10	#6	9'-8"	145
WS	11	#4	7'-8"	56
WV2	11	#5	11'-11"	137
REINFORCING STEEL			LB	1,830
CL C CONC (HPC) (ABUT)			CY	9.9

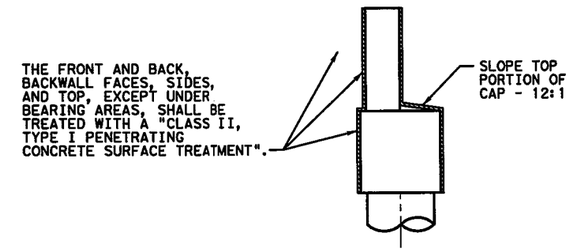

CONCRETE SURFACE TREATMENT DETAIL FOR ABUTMENT

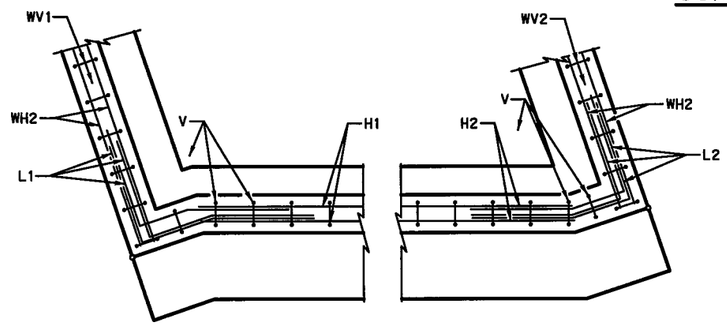

BACKWALL

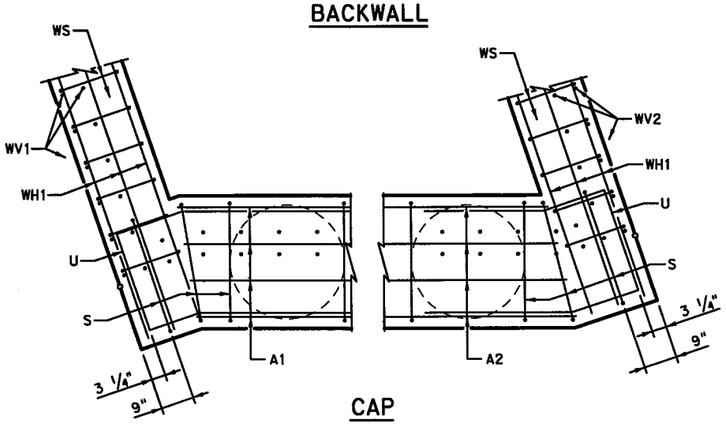

CAP

CORNER DETAILS

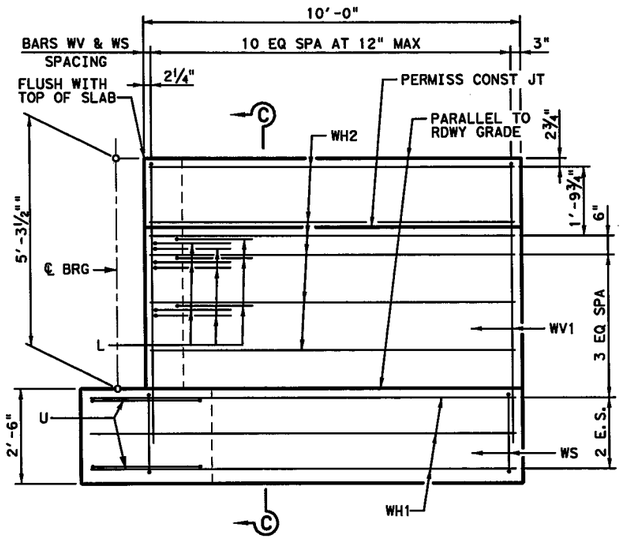

PHASE 2 STEP 1 WINGWALL ELEVATION

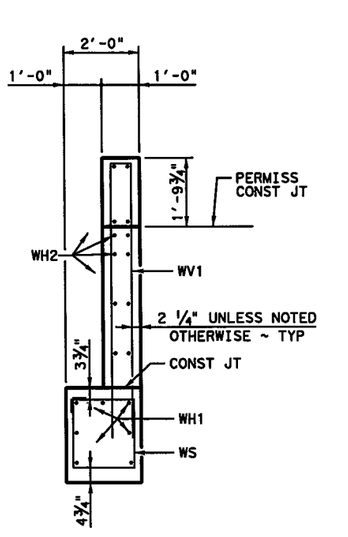

SECTION C-C

HL 93 LOADING

WINGWALL DETAILS

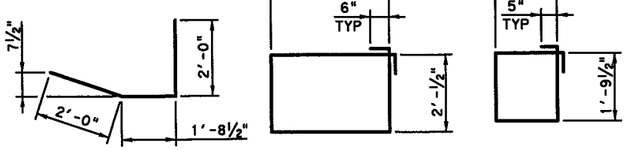

BARS L2 | BARS S | BARS WS | BARS U | BARS L1 | BARS V & WV

PESC
P.E. Structural Consultants, Inc.
www.PEStructural.com
TBPE Firm No. F-1475

Texas Department of Transportation

© 2012

IH 35W FROM NORTH TARRANT PKWY TO IH 820

ABUTMENT NO. 1

SB FRONTAGE RD

OVER BIG FOSSIL CK

SCALE: NTS

SHEET 2 OF 2

DESIGN	FED. RD. DIV. NO.	FEDERAL AID PROJECT NO.		HIGHWAY NO.
TJR	6	(SEE TITLE SHEET)		IH 35W
GRAPHICS TLS	STATE	DISTRICT	COUNTY	SHEET NO.
CHECK NRR	TEXAS	FTW	TARRANT	1669
CHECK AB	CONTROL	SECTION	JOB	
	0014	16	255, ETC.	

FILENAME: S3BBR*BFC-SBFR*AB*02.dgn

DRAWING DATE: 7/13/2012

TABLE OF ELEVATIONS

CAP	"A"	"B"	"C"	"D"	---	---
	608.765	609.475	612.273	614.089	---	---
WINGWALL	"F"	"G"	---	---	---	---
	609.183	613.796	---	---	---	---
TOP OF DS	DS 1	DS 2	DS 3	DS 4	DS 5	DS 6
	606.926	606.807	606.689	606.559	606.429	606.299
AS- BUILT SHAFT TIP	585.926	585.807	585.689	585.559	585.429	585.299

GENERAL NOTES:

1. DESIGNED ACCORDING TO AASHTO LRFD BRIDGE DESIGN SPECIFICATIONS, 5TH EDITION (2010).
2. CLASS "C" (HPC) CONCRETE STRENGTH F'C = 3,600 PSI.
3. ALL CAP AND WALL REINFORCING SHALL BE GRADE 60.
4. SEE FD STANDARD FOR ALL FOUNDATION DETAILS AND NOTES.
5. SEE RAIL STANDARD FOR RAIL ANCHORAGE IN WINGWALLS.
6. CALCULATED FOUNDATION LOADS:
   CAP DRILLED SHAFTS = 80 TONS / D.S.

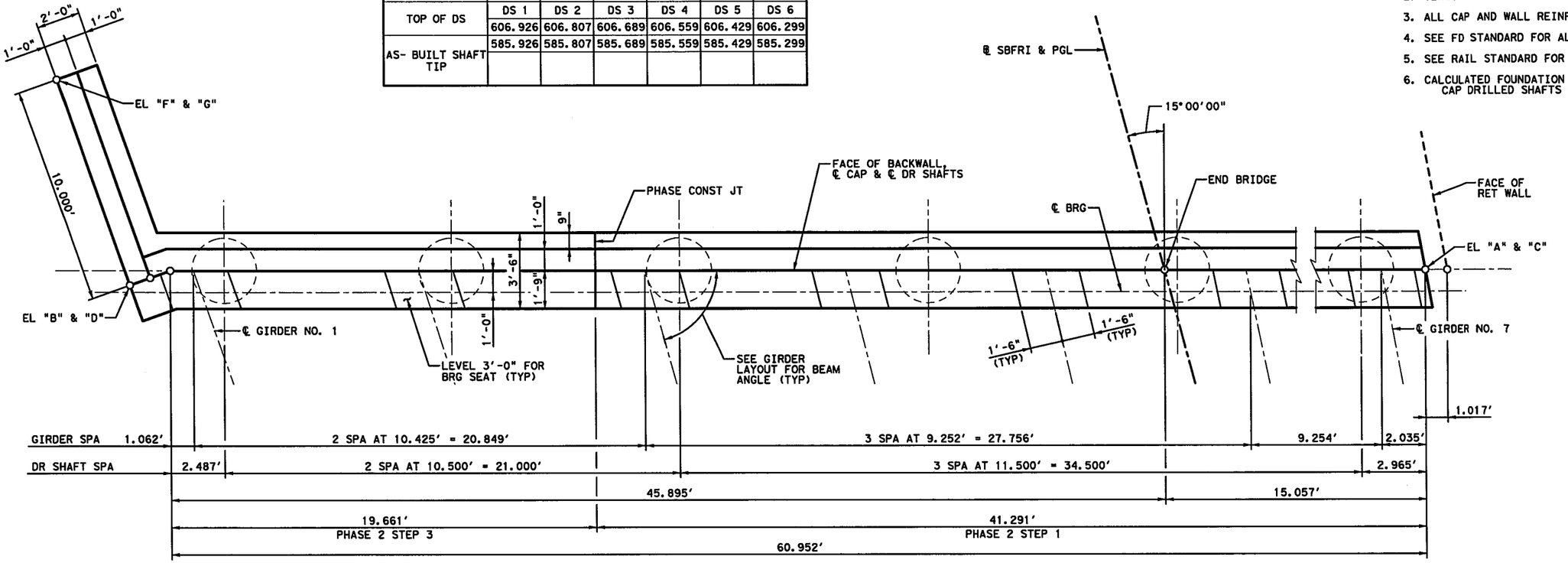

PLAN

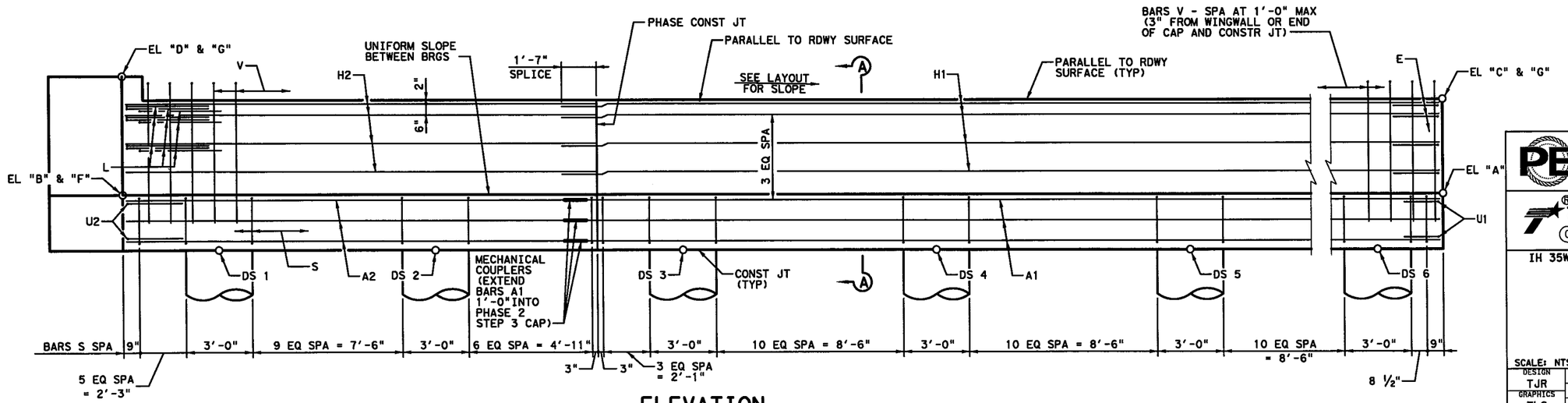

ELEVATION

STATE OF TEXAS
TIMOTHY J. ROSS
98465
LICENSED PROFESSIONAL ENGINEER
7/6/12

HL 93 LOADING

P.E. Structural Consultants, Inc.
www.PEStructural.com
TBPE Firm No. F-1475

Texas Department of Transportation
© 2012

IH 35W FROM NORTH TARRANT PKWY TO IH 820

ABUTMENT NO. 4

SB FRONTAGE RD
OVER BIG FOSSIL CK

SCALE: NTS SHEET 1 OF 2

DESIGN	FED.RD. DIV.NO.	FEDERAL AID PROJECT NO.		HIGHWAY NO.
TJR	6	(SEE TITLE SHEET)		IH 35W
GRAPHICS	STATE	DISTRICT	COUNTY	SHEET NO.
TLS	TEXAS	FTW	TARRANT	1670
CHECK	CONTROL	SECTION	JOB	
NRR	0014	16	255, ETC.	
CHECK				
AB				

FILENAME: S3BBR*BFC-SBFR*AB*03.dgn
DRAWING DATE: 7/13/2012

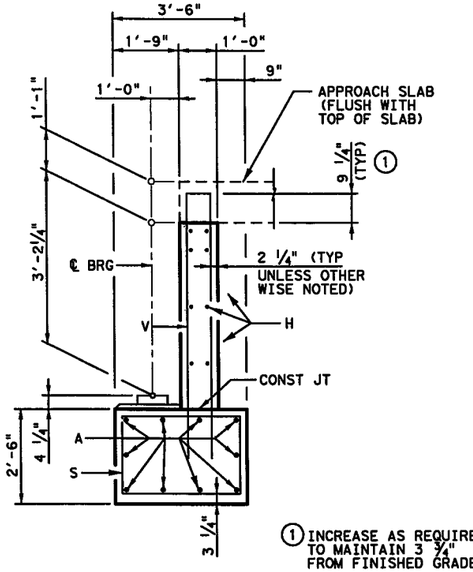

SECTION A-A

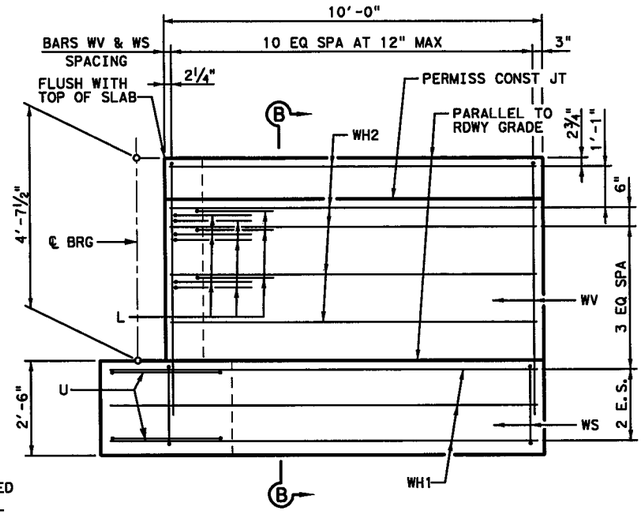

ELEVATION

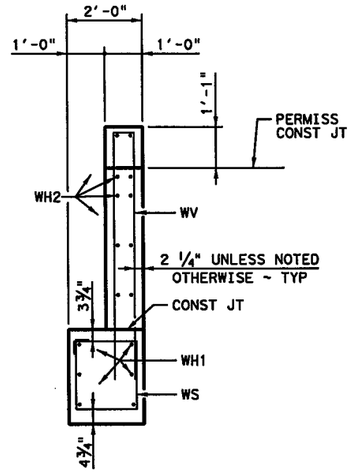

SECTION B-B

WINGWALL DETAILS

TABLE OF ESTIMATED QUANTITIES ~ PH 2 STEP 1				
BAR	NO.	SIZE	LENGTH	WEIGHT
A1	10	#11	41'-9"	2,218
H1	8	#6	42'-8"	513
E	4	#6	4'-8"	28
S	40	#5	11'-4"	473
U1	2	#6	8'-1"	24
V	42	#5	11'-11"	522
REINFORCING STEEL			LB	3,778
CL C CONC (HPC) (ABUT)			CY	18.9

TABLE OF ESTIMATED QUANTITIES ~ PH 2 STEP 3				
BAR	NO.	SIZE	LENGTH	WEIGHT
A2	10	#11	18'-8"	992
H2	8	#6	19'-8"	236
L	9	#6	5'-11"	80
S	23	#5	11'-4"	272
U2	2	#6	11'-7"	35
V	21	#5	11'-11"	261
WH1	7	#6	11'-5"	120
WH2	10	#6	9'-8"	145
WS	11	#4	7'-8"	56
WV	11	#5	12'-0"	138
REINFORCING STEEL			LB	2,335
CL C CONC (HPC) (ABUT)			CY	12.4

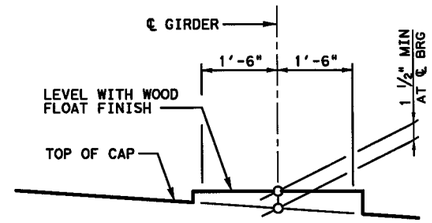

BEARING SEAT DETAIL

(BEARING SURFACE SHALL BE CLEAN AND FREE OF ALL LOOSE MATERIAL BEFORE PLACING BEARING PAD)

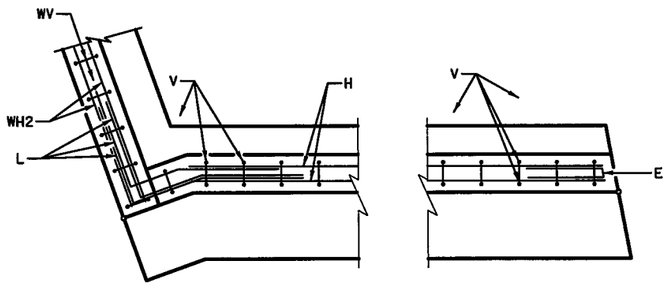

BACKWALL

THE FRONT AND BACK, BACKWALL FACES, SIDES, AND TOP, EXCEPT UNDER BEARING AREAS, SHALL BE TREATED WITH A "CLASS II, TYPE I PENETRATING CONCRETE SURFACE TREATMENT".

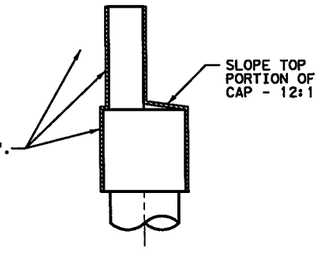

CONCRETE SURFACE TREATMENT DETAIL FOR ABUTMENT

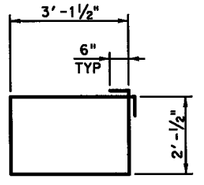

BARS S

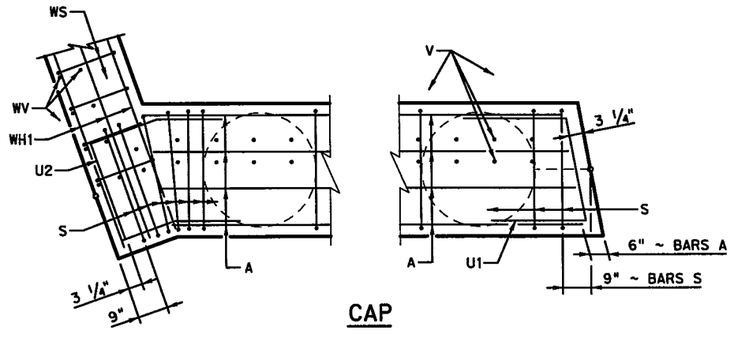

CAP

CORNER DETAILS

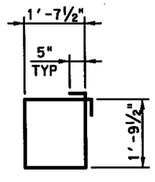

BARS WS

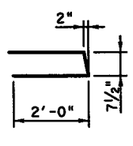

BARS E

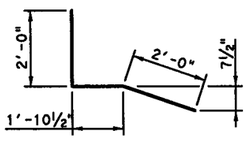

BARS L

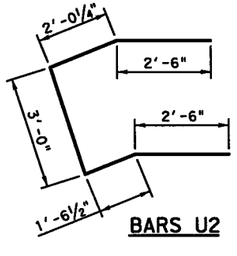

BARS U2

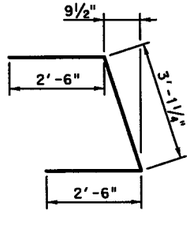

BARS U1

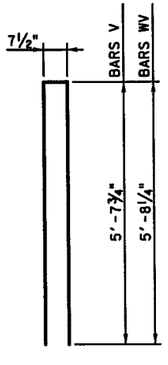

BARS V & WV

HL 93 LOADING

PESC
P.E. Structural Consultants, Inc.
www.PEStructural.com
TBPE Firm No. F-1475

Texas Department of Transportation
© 2012

IH 35W FROM NORTH TARRANT PKWY TO IH 820

ABUTMENT NO. 4

SB FRONTAGE RD

OVER BIG FOSSIL CK

SCALE: NTS

SHEET 2 OF 2

DESIGN	FED. RD. DIV. NO.	FEDERAL AID PROJECT NO.		HIGHWAY NO.
TJR	6	(SEE TITLE SHEET)		IH 35W
GRAPHICS	STATE	DISTRICT	COUNTY	SHEET NO.
TLS	TEXAS	FTW	TARRANT	
CHECK	CONTROL	SECTION	JOB	1671
NRR	0014	16	255, ETC.	
CHECK				
AB				

STATE OF TEXAS
TIMOTHY J. ROSS
98465
LICENSED
PROFESSIONAL ENGINEER
7/6/12

FILENAME: S3BBR*BFC-SBFR*AB*04.dgn
DRAWING DATE: 7/13/2012

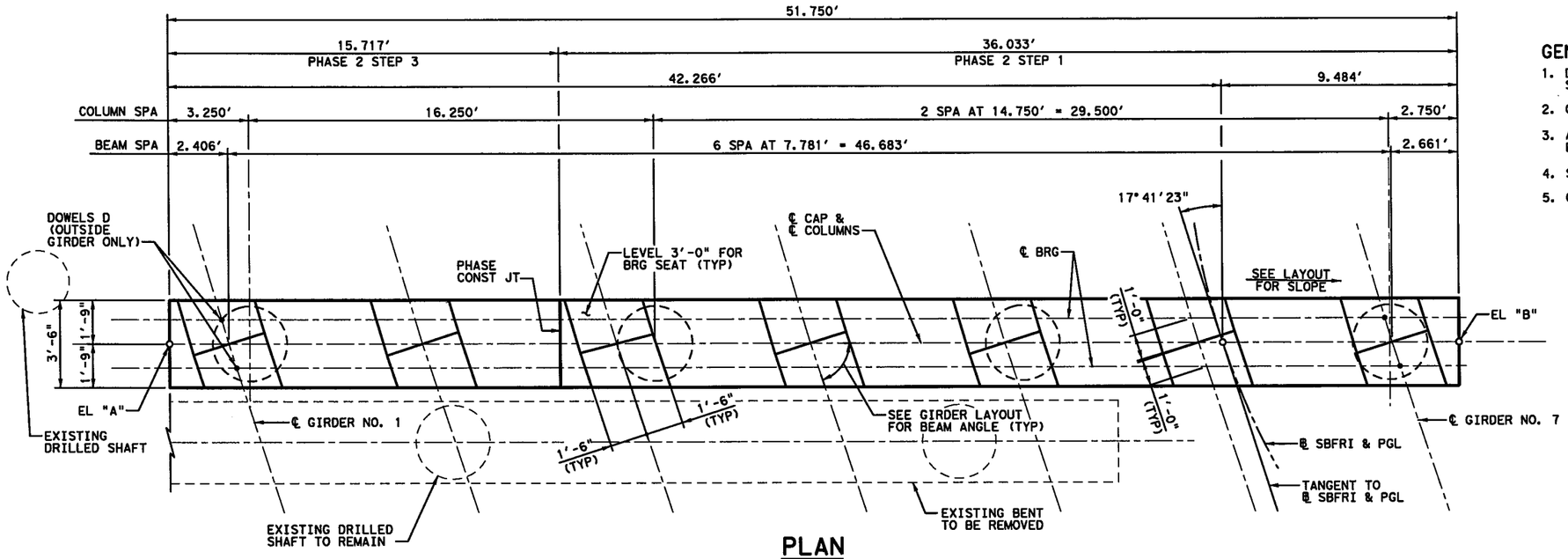

PLAN

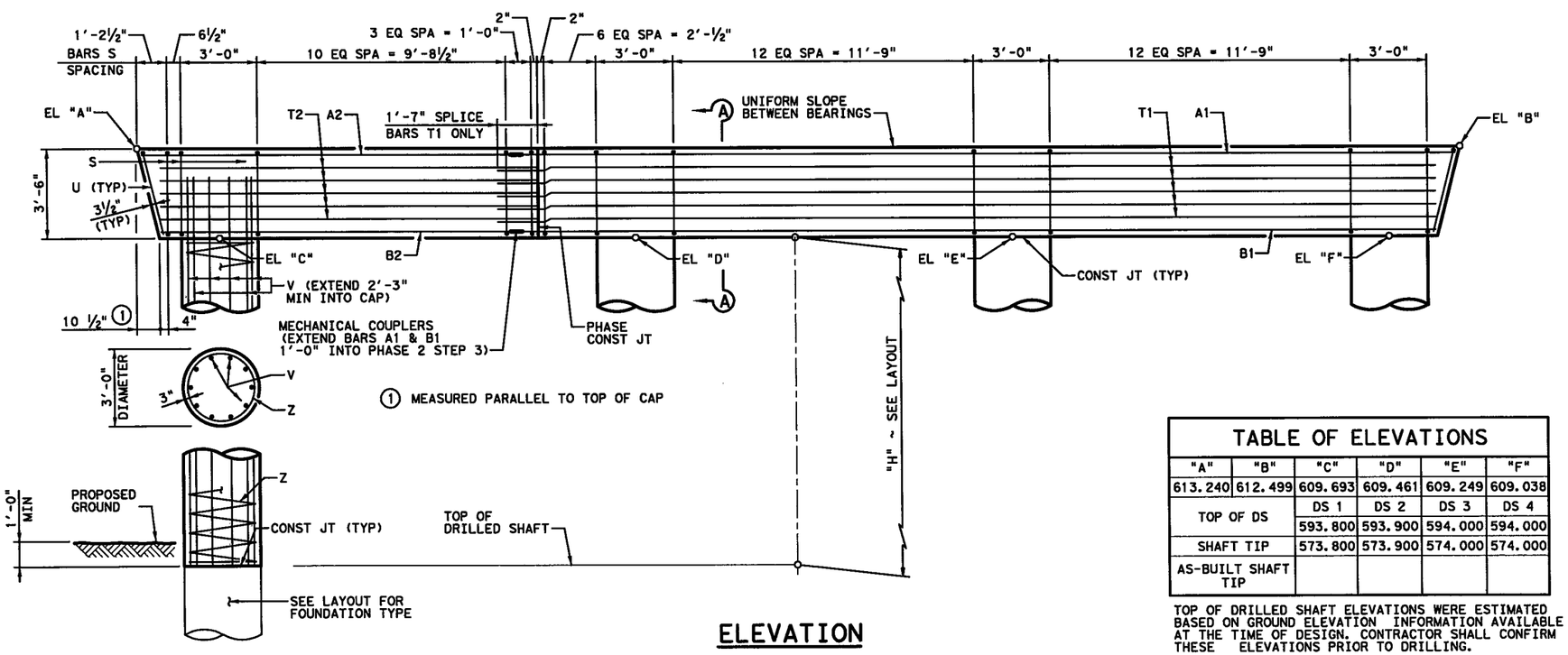

ELEVATION

TABLE OF ELEVATIONS						
"A"	"B"	"C"	"D"	"E"	"F"
613.240	612.499	609.693	609.461	609.249	609.038
TOP OF DS		DS 1	DS 2	DS 3	DS 4
		593.800	593.900	594.000	594.000
SHAFT TIP		573.800	573.900	574.000	574.000
AS-BUILT SHAFT TIP					

TOP OF DRILLED SHAFT ELEVATIONS WERE ESTIMATED BASED ON GROUND ELEVATION INFORMATION AVAILABLE AT THE TIME OF DESIGN. CONTRACTOR SHALL CONFIRM THESE ELEVATIONS PRIOR TO DRILLING.

GENERAL NOTES:

1. DESIGNED ACCORDING TO AASHTO LRFD BRIDGE DESIGN SPECIFICATIONS, 5TH EDITION (2010).
2. CLASS "C" (HPC) CONCRETE STRENGTH F'C = 3,600 PSI.
3. ALL CAP REINFORCING SHALL BE GRADE 60. COLUMN AND DRILLED SHAFT REINFORCING MAY BE GRADE 40.
4. SEE FD STANDARD FOR ALL FOUNDATION DETAILS AND NOTES.
5. CALCULATED FOUNDATION LOAD: 180 TONS / D.S.

STATE OF TEXAS
TIMOTHY J. ROSS
98465
LICENSED
PROFESSIONAL ENGINEER
7/6/12

HL 93 LOADING

PESC
P.E. Structural Consultants, Inc.
www.PEStructural.com
TBPE Firm No. F-1475

Texas Department of Transportation
© 2012

IH 35W FROM NORTH TARRANT PKWY TO IH 820

INTERIOR BENT NO. 2

SB FRONTAGE RD

OVER BIG FOSSIL CK

SCALE: NTS

SHEET 1 OF 2

DESIGN	FED. RD. DIV. NO.	FEDERAL AID PROJECT NO.		HIGHWAY NO.
TJR	6	(SEE TITLE SHEET)		IH 35W
GRAPHICS	STATE	DISTRICT	COUNTY	SHEET NO.
TLS	TEXAS	FTW	TARRANT	
CHECK	CONTROL	SECTION	JOB	1672
NRR	0014	16	255, ETC.	
CHECK				
AB				

FILENAME: S3BBR*BFC-SBFR*IB*01.dgn

DRAWING DATE: 7/13/2012

TABLE OF ESTIMATED QUANTITIES ~ PHASE 2 STEP 1 ②

BENT	COLUMN HEIGHT "H"	BAR V 30 - #9		BAR Z 3 - #3 SPIRAL		TOTAL REINFORCING STEEL	CL C CONC (COLUMN) (HPC) (3 COLS)
NO.	(FT)	LENGTH	WEIGHT (LB)	LENGTH	WEIGHT (LB)	WEIGHT (LB)	(CY)
2	16	18' - 3"	1,862	267' - 7"	302	2,164	12.6

TOTAL ESTIMATED QUANTITIES ③ ~ PHASE 2 STEP 1

TABLE OF ESTIMATED QUANTITIES ~ PHASE 2 STEP 3 ②

BENT	COLUMN HEIGHT "H"	BAR V 10 - #9		BAR Z 1 - #3 SPIRAL		TOTAL REINFORCING STEEL	CL C CONC (COLUMN) (HPC) (1 COLS)
NO.	(FT)	LENGTH	WEIGHT (LB)	LENGTH	WEIGHT (LB)	WEIGHT (LB)	(CY)
2	16	18' - 3"	621	267' - 7"	101	722	4.2

TOTAL ESTIMATED QUANTITIES ④ ~ PHASE 2 STEP 3

TABLE OF ESTIMATED QUANTITIES ~ PH 2 STEP 1

BAR	NO.	SIZE	LENGTH	WEIGHT
A1	5	#11	36'-9"	976
B1	6	#11	36'-0"	1,148
D	2	1 1/4" D	1'-8"	14
E1	15	#4	5'-6" AVG	55
E2	20	#4	4'-2" AVG	56
S	34	#5	13'-6"	479
T1	10	#5	36'-7"	382
U	1	#6	9'-8"	15
REINFORCING STEEL			LB	3,125
CL C CONC (HPC) (CAP)			CY	16.5

TABLE OF ESTIMATED QUANTITIES ~ PH 2 STEP 3

BAR	NO.	SIZE	LENGTH	WEIGHT
A2	5	#11	14'-6"	385
B2	6	#11	13'-9"	438
D	2	1 1/4" D	1'-8"	14
E1	6	#4	5'-6" AVG	22
E2	8	#4	4'-2" AVG	22
S	16	#5	13'-6"	225
T2	10	#5	14'-9"	154
U	1	#6	9'-8"	15
REINFORCING STEEL			LB	1,275
CL C CONC (HPC) (CAP)			CY	7.1

② ADJUST BARS V LENGTH BY 1 FT AND BARS Z LENGTH BY 15.74 FT FOR EACH LINEAR FOOT OF VARIATION IN "H" VALUE.

③ ADJUST REINFORCING STEEL TOTAL BY 120 LBS AND CLASS "C" CONCRETE TOTAL BY 0.7854 CY FOR EACH LINEAR FOOT OF VARIATION IN "H" VALUE.

④ ADJUST REINFORCING STEEL TOTAL BY 40 LBS AND CLASS "C" CONCRETE TOTAL BY 0.2618 CY FOR EACH LINEAR FOOT OF VARIATION IN "H" VALUE.

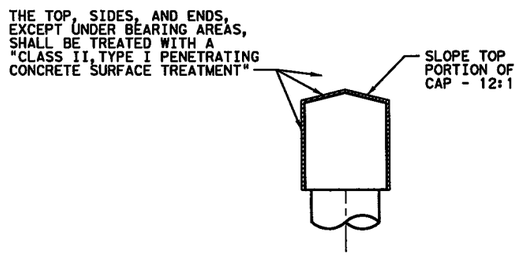

CONCRETE SURFACE TREATMENT DETAIL FOR INTERIOR BENT

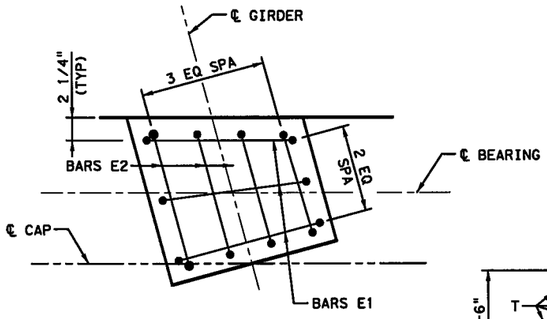

PLAN

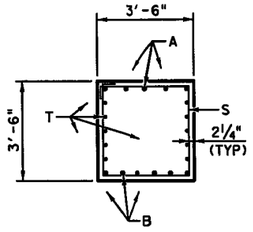

SECTION A-A

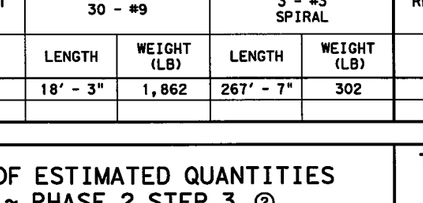

BEARING SEAT DETAIL
(HEIGHTS 3" OR LESS)

(BEARING SURFACE MUST BE CLEAN AND FREE OF ALL LOOSE MATERIAL BEFORE PLACING BEARING PAD.)

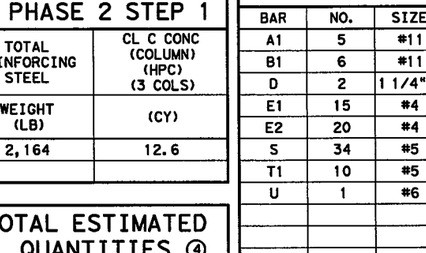

ELEVATION

BEARING SEAT DETAIL
(HEIGHTS OVER 3")

(BEARING SURFACE MUST BE CLEAN AND FREE OF ALL LOOSE MATERIAL BEFORE PLACING BEARING PAD.)

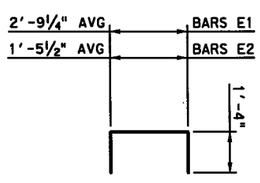

BARS E1 & E2

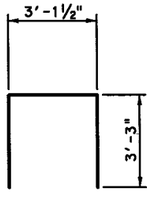

BARS U

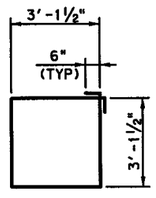

BARS S

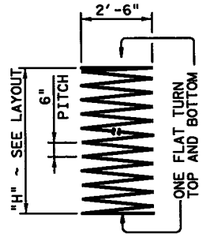

BARS Z

HL 93 LOADING

PESC P.E. Structural Consultants, Inc.
www.PEStructural.com
TBPE Firm No. F-1475

Texas Department of Transportation
© 2012

IH 35W FROM NORTH TARRANT PKWY TO IH 820

INTERIOR BENT NO. 2

SB FRONTAGE RD
OVER BIG FOSSIL CK

SCALE: NTS — SHEET 2 OF 2

DESIGN	FED. RD. DIV. NO.	FEDERAL AID PROJECT NO.		HIGHWAY NO.
TJR	6	(SEE TITLE SHEET)		IH 35W
GRAPHICS TLS	STATE	DISTRICT	COUNTY	SHEET NO.
CHECK NRR	TEXAS	FTW	TARRANT	1673
CHECK AB	CONTROL	SECTION	JOB	
	0014	16	255, ETC.	

FILENAME: S3BBR*BFC-SBFR*IB*02.dgn
DRAWING DATE: 7/13/2012

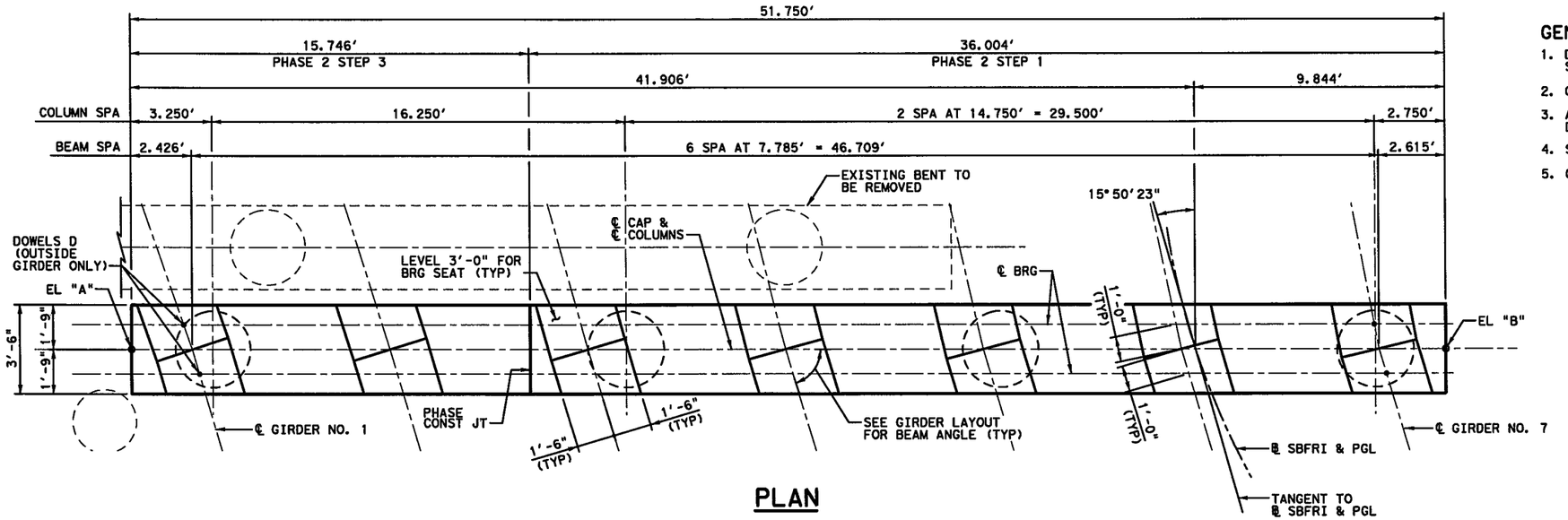

PLAN

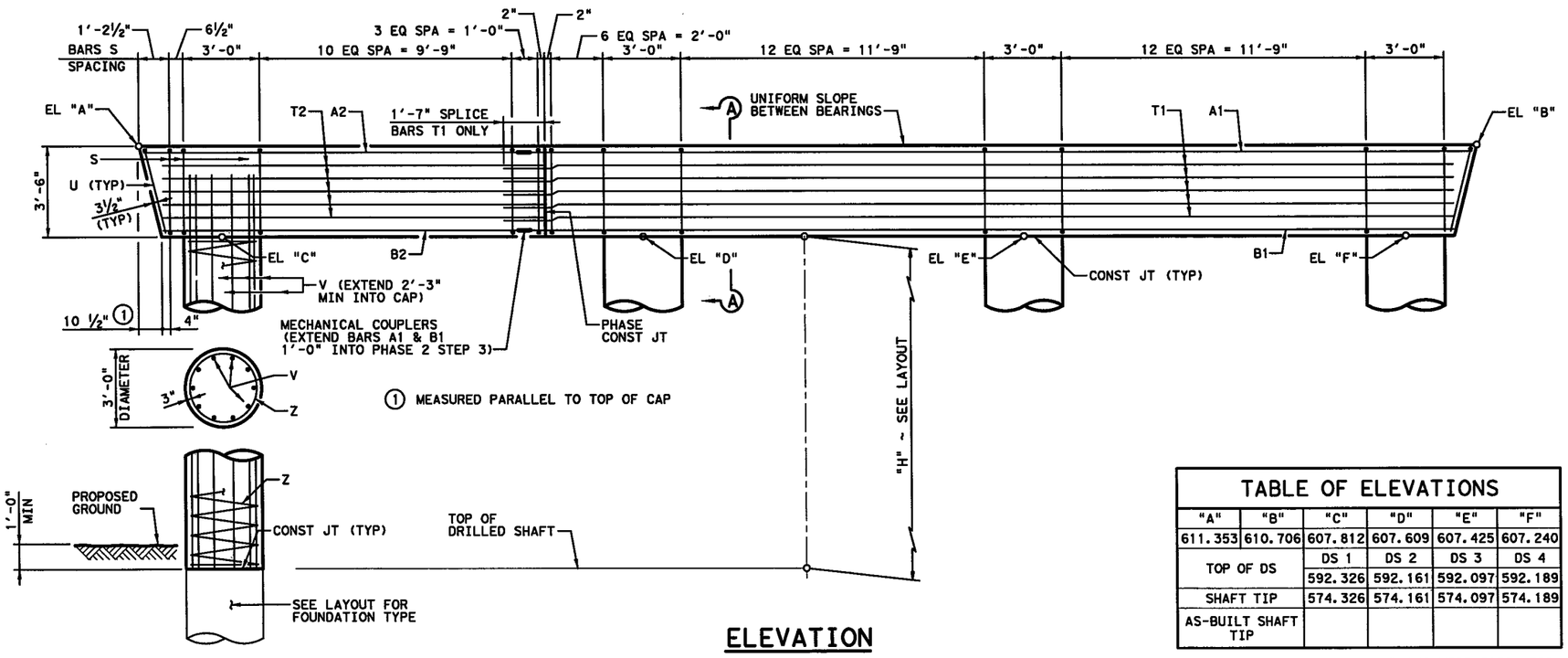

ELEVATION

TABLE OF ELEVATIONS						
"A"	"B"	"C"	"D"	"E"	"F"	
611.353	610.706	607.812	607.609	607.425	607.240	
TOP OF DS		DS 1	DS 2	DS 3	DS 4	
		592.326	592.161	592.097	592.189	
SHAFT TIP		574.326	574.161	574.097	574.189	
AS-BUILT SHAFT TIP						

TOP OF DRILLED SHAFT ELEVATIONS WERE ESTIMATED BASED ON GROUND ELEVATION INFORMATION AVAILABLE AT THE TIME OF DESIGN. CONTRACTOR SHALL CONFIRM THESE ELEVATIONS PRIOR TO DRILLING.

GENERAL NOTES:

1. DESIGNED ACCORDING TO AASHTO LRFD BRIDGE DESIGN SPECIFICATIONS, 5TH EDITION (2010).
2. CLASS "C" (HPC) CONCRETE STRENGTH F'C = 3,600 PSI.
3. ALL CAP REINFORCING SHALL BE GRADE 60. COLUMN AND DRILLED SHAFT REINFORCING MAY BE GRADE 40.
4. SEE FD STANDARD FOR ALL FOUNDATION DETAILS AND NOTES.
5. CALCULATED FOUNDATION LOAD: 210 TONS / D.S.

STATE OF TEXAS
TIMOTHY J. ROSS
98465
LICENSED
PROFESSIONAL ENGINEER
7/6/12

HL 93 LOADING

PESC
P.E. Structural Consultants, Inc.
www.PEStructural.com
TBPE Firm No. F-1475

Texas Department of Transportation
© 2012

IH 35W FROM NORTH TARRANT PKWY TO IH 820

INTERIOR BENT NO. 3
SB FRONTAGE RD
OVER BIG FOSSIL CK

SCALE: NTS — SHEET 1 OF 2

DESIGN	FED. RD. DIV. NO.	FEDERAL AID PROJECT NO.		HIGHWAY NO.
TJR	6	(SEE TITLE SHEET)		IH 35W
GRAPHICS	STATE	DISTRICT	COUNTY	SHEET NO.
TLS	TEXAS	FTW	TARRANT	1674
CHECK	CONTROL	SECTION	JOB	
NRR	0014	16	255, ETC.	
CHECK				
AB				

FILENAME: S3BBR*BFC-SBFR*IB*03.dgn
DRAWING DATE: 7/13/2012

TABLE OF ESTIMATED QUANTITIES ~ PHASE 2 STEP 1 ②

BENT	COLUMN HEIGHT "H"	BAR V 30 - #9		BAR Z 3 - #3 SPIRAL		TOTAL REINFORCING STEEL	CL C CONC (COLUMN) (HPC) (3 COLS)
NO.	(FT)	LENGTH	WEIGHT (LB)	LENGTH	WEIGHT (LB)	WEIGHT (LB)	(CY)
3	16	18' - 3"	1,862	267' - 7"	302	2,164	12.6

TOTAL ESTIMATED QUANTITIES ③ ~ PHASE 2 STEP 1

TOTAL REINFORCING STEEL	CL C CONC (COLUMN) (HPC) (3 COLS)
WEIGHT (LB)	(CY)
2,164	12.6

TABLE OF ESTIMATED QUANTITIES ~ PHASE 2 STEP 3 ②

BENT	COLUMN HEIGHT "H"	BAR V 10 - #9		BAR Z 1 - #3 SPIRAL		TOTAL REINFORCING STEEL	CL C CONC (COLUMN) (HPC) (1 COLS)
NO.	(FT)	LENGTH	WEIGHT (LB)	LENGTH	WEIGHT (LB)	WEIGHT (LB)	(CY)
3	16	18' - 3"	621	267' - 7"	101	722	4.2

TOTAL ESTIMATED QUANTITIES ④ ~ PHASE 2 STEP 3

TOTAL REINFORCING STEEL	CL C CONC (COLUMN) (HPC) (1 COLS)
WEIGHT (LB)	(CY)
722	4.2

TABLE OF ESTIMATED QUANTITIES ~ PH 2 STEP 1

BAR	NO.	SIZE	LENGTH	WEIGHT
A1	5	#11	36'-9"	976
B1	6	#11	36'-0"	1,148
D	2	1 1/4" D	1'-8"	14
S	34	#5	13'-6"	479
T1	10	#5	36'-7"	382
U	1	#6	9'-8"	15
REINFORCING STEEL			LB	3,014
CL C CONC (HPC) (CAP)			CY	16.4

TABLE OF ESTIMATED QUANTITIES ~ PH 2 STEP 3

BAR	NO.	SIZE	LENGTH	WEIGHT
A2	5	#11	14'-6"	385
B2	6	#11	13'-9"	438
D	2	1 1/4" D	1'-8"	14
S	16	#5	13'-6"	225
T2	10	#5	14'-9"	154
U	1	#6	9'-8"	15
REINFORCING STEEL			LB	1,231
CL C CONC (HPC) (CAP)			CY	7.0

② ADJUST BARS V LENGTH BY 1 FT AND BARS Z LENGTH BY 15.74 FT FOR EACH LINEAR FOOT OF VARIATION IN "H" VALUE.

③ ADJUST REINFORCING STEEL TOTAL BY 120 LBS AND CLASS "C" CONCRETE TOTAL BY 0.7854 CY FOR EACH LINEAR FOOT OF VARIATION IN "H" VALUE.

④ ADJUST REINFORCING STEEL TOTAL BY 40 LBS AND CLASS "C" CONCRETE TOTAL BY 0.2618 CY FOR EACH LINEAR FOOT OF VARIATION IN "H" VALUE.

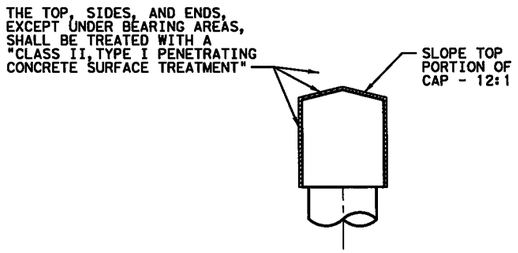

CONCRETE SURFACE TREATMENT DETAIL FOR INTERIOR BENT

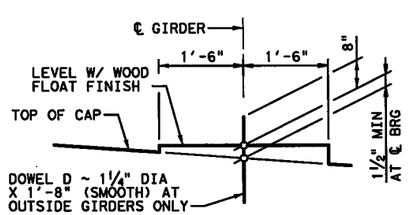

BEARING SEAT DETAIL

(BEARING SURFACE MUST BE CLEAN AND FREE OF ALL LOOSE MATERIAL BEFORE PLACING BEARING PAD.)

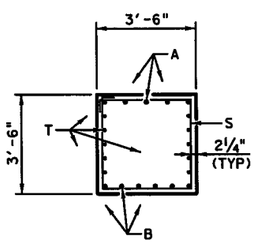

SECTION A-A

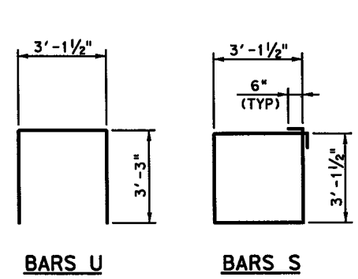

BARS U BARS S BARS Z

HL 93 LOADING

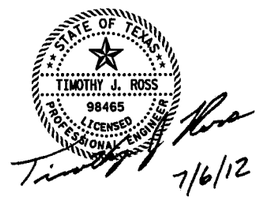

P.E. Structural Consultants, Inc.
www.PEStructural.com
TBPE Firm No. F-1475

Texas Department of Transportation
© 2012

IH 35W FROM NORTH TARRANT PKWY TO IH 820

INTERIOR BENT NO. 3

SB FRONTAGE RD

OVER BIG FOSSIL CK

SCALE: NTS SHEET 2 OF 2

DESIGN	FED.RD. DIV.NO.	FEDERAL AID PROJECT NO.		HIGHWAY NO.
TJR	6	(SEE TITLE SHEET)		IH 35W
GRAPHICS TLS	STATE	DISTRICT	COUNTY	SHEET NO.
CHECK NRR	TEXAS	FTW	TARRANT	1675
CHECK AB	CONTROL	SECTION	JOB	
	0014	16	255, ETC.	

DRAWING DATE: 7/13/2012 FILENAME: S3BBR#BFC-SBFR#1B#04.dgn

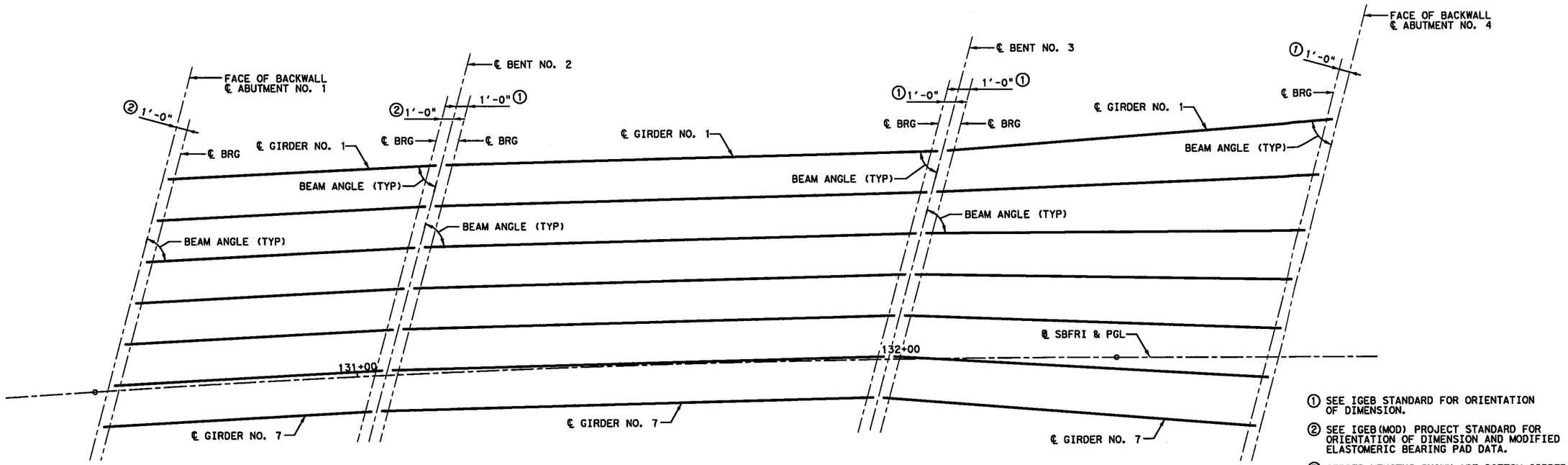

SPAN 1
(TX40 GIRDERS)

SPAN 2
(TX40 GIRDERS)

SPAN 3
(TX40 GIRDERS)

① SEE IGEB STANDARD FOR ORIENTATION OF DIMENSION.

② SEE IGEB(MOD) PROJECT STANDARD FOR ORIENTATION OF DIMENSION AND MODIFIED ELASTOMERIC BEARING PAD DATA.

③ GIRDER LENGTHS SHOWN ARE BOTTOM GIRDER FLANGE LENGTHS WITH ADJUSTMENTS MADE FOR BEAM SLOPE.

BENT REPORT

ABUT NO. 1 (S 85 36 46.33 E)
DISTANCE BETWEEN STATION LINE AND BEAM 1 40.082 L

			BEAM SPAC. (C.L. BENT)	BEAM ANGLE D	M	S
SPAN 1	BEAM	1	0.000	72	3	50
	BEAM	2	7.824	72	0	56
	BEAM	3	7.824	71	58	3
	BEAM	4	7.824	71	55	9
	BEAM	5	7.824	71	52	16
	BEAM	6	7.824	71	49	23
	BEAM	7	7.824	71	46	29
	TOTAL		46.944			

BENT NO. 2 (S 85 36 46.33 E)
DISTANCE BETWEEN STATION LINE AND BEAM 1 39.859 L

			BEAM SPAC. (C.L. BENT)	BEAM ANGLE D	M	S
SPAN 1	BEAM	1	0.000	72	3	50
	BEAM	2	7.780	72	0	56
	BEAM	3	7.780	71	58	3
	BEAM	4	7.780	71	55	9
	BEAM	5	7.780	71	52	16
	BEAM	6	7.780	71	49	23
	BEAM	7	7.780	71	46	29
	TOTAL		46.683			

BENT NO. 3 (S 85 36 46.33 E)
DISTANCE BETWEEN STATION LINE AND BEAM 1 39.479 L

			BEAM SPAC. (C.L. BENT)	BEAM ANGLE D	M	S
SPAN 2	BEAM	1	0.000	73	27	40
	BEAM	2	7.785	73	27	49
	BEAM	3	7.785	73	27	58
	BEAM	4	7.785	73	28	7
	BEAM	5	7.785	73	28	17
	BEAM	6	7.785	73	28	26
	BEAM	7	7.785	73	28	35
	TOTAL		46.709			

BENT NO. 3 (S 85 36 46.33 E)
DISTANCE BETWEEN STATION LINE AND BEAM 1 39.479 L

			BEAM SPAC. (C.L. BENT)	BEAM ANGLE D	M	S
SPAN 3	BEAM	1	0.000	70	35	36
	BEAM	2	7.785	72	37	1
	BEAM	3	7.785	74	41	11
	BEAM	4	7.785	75	51	16
	BEAM	5	7.785	77	2	4
	BEAM	6	7.785	78	13	33
	BEAM	7	7.785	79	25	47
	TOTAL		46.709			

BENT NO. 4 (S 85 36 46.33 E)
DISTANCE BETWEEN STATION LINE AND BEAM 1 44.835 L

			BEAM SPAC. (C.L. BENT)	BEAM ANGLE D	M	S
SPAN 3	BEAM	1	0.000	70	35	36
	BEAM	2	10.425	72	37	1
	BEAM	3	10.425	74	41	11
	BEAM	4	9.252	75	51	16
	BEAM	5	9.252	77	2	4
	BEAM	6	9.252	78	13	33
	BEAM	7	9.254	79	25	47
	TOTAL		57.858			

BEAM REPORT

BEAM REPORT, SPAN 1

	HORIZONTAL DISTANCE C-C BENT	C-C BRG.	TRUE DISTANCE BOT. BM. FLG. ③	BEAM SLOPE
BEAM 1	49.180	47.129	48.67	-0.0138
BEAM 2	49.194	47.142	48.69	-0.0136
BEAM 3	49.207	47.156	48.70	-0.0134
BEAM 4	49.221	47.169	48.71	-0.0132
BEAM 5	49.234	47.182	48.73	-0.0129
BEAM 6	49.248	47.195	48.74	-0.0127
BEAM 7	49.261	47.209	48.75	-0.0125

BEAM REPORT, SPAN 2

	HORIZONTAL DISTANCE C-C BENT	C-C BRG.	TRUE DISTANCE BOT. BM. FLG. ③	BEAM SLOPE
BEAM 1	92.387	90.387	91.91	-0.0207
BEAM 2	92.386	90.386	91.91	-0.0206
BEAM 3	92.385	90.385	91.90	-0.0204
BEAM 4	92.383	90.383	91.90	-0.0203
BEAM 5	92.382	90.382	91.90	-0.0201
BEAM 6	92.381	90.381	91.90	-0.0200
BEAM 7	92.380	90.380	91.90	-0.0198

BEAM REPORT, SPAN 3

	HORIZONTAL DISTANCE C-C BENT	C-C BRG.	TRUE DISTANCE BOT. BM. FLG. ③	BEAM SLOPE
BEAM 1	71.346	69.285	70.86	-0.0273
BEAM 2	70.513	68.465	70.03	-0.0279
BEAM 3	69.769	67.733	69.29	-0.0285
BEAM 4	69.396	67.365	68.92	-0.0287
BEAM 5	69.053	67.027	68.57	-0.0290
BEAM 6	68.738	66.717	68.26	-0.0292
BEAM 7	68.454	66.437	67.98	-0.0294

STATE OF TEXAS
TIMOTHY J. ROSS
98465
LICENSED
PROFESSIONAL ENGINEER
7/6/12

HL 93 LOADING

PESC P.E. Structural Consultants, Inc.
www.PEStructural.com
TBPE Firm No. F-1475

Texas Department of Transportation
© 2012

IH 35W FROM NORTH TARRANT PKWY TO IH 820

GIRDER LAYOUT (SPANS 1-3)

SB FRONTAGE RD
OVER BIG FOSSIL CK

SCALE: NTS — SHEET 1 OF 1

DESIGN	FED.RD. DIV.NO.	FEDERAL AID PROJECT NO.		HIGHWAY NO.
TJR	6	(SEE TITLE SHEET)		IH 35W
GRAPHICS TLS	STATE	DISTRICT	COUNTY	SHEET NO.
CHECK NRR	TEXAS	FTW	TARRANT	1676
CHECK AB	CONTROL	SECTION	JOB	
	0014	16	255, ETC.	

DRAWING DATE: 7/13/2012 FILENAME: S3BBR*BFC-SBFR*GF*01.dgn

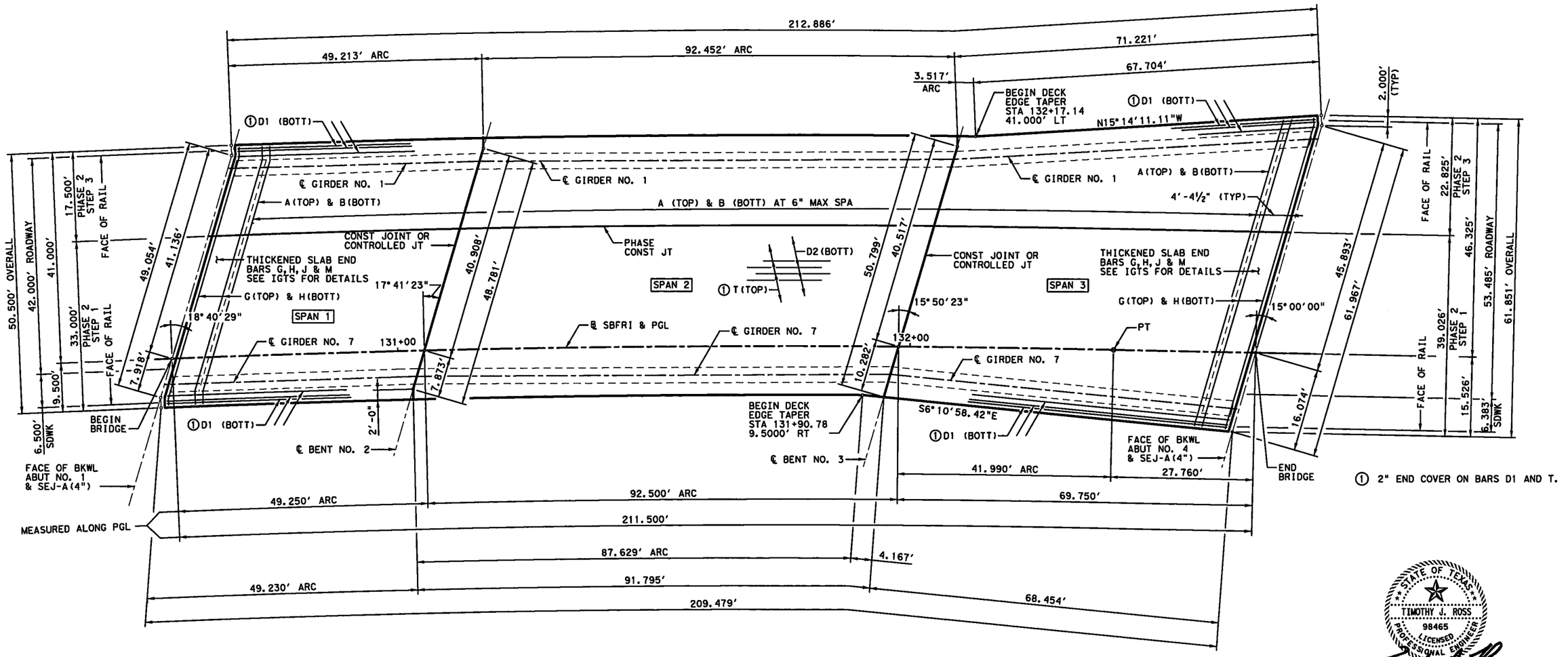

① 2" END COVER ON BARS D1 AND T.

PLAN

BAR TABLE	
BAR	SIZE
A	#5
B	#5
D	#5
G	#5
H	#5
J	#5
M	#5
T	#4
U	#4

GENERAL NOTES:

1. DESIGNED ACCORDING TO AASHTO LRFD BRIDGE DESIGN SPECIFICATIONS, 5TH EDITION (2010).
2. CLASS "S" (HPC) CONCRETE STRENGTH F'C = 4,000 PSI.
3. ALL REINFORCING SHALL BE GRADE 60 AND EPOXY COATED.
4. SEE PCP OR PMDF STANDARDS FOR DETAILS AND QUANTITY ADJUSTMENTS IF EITHER OF THESE OPTIONS ARE USED.
5. SEE IGTS STANDARD FOR THICKENED SLAB END DETAILS.
6. SEE IGMS STANDARD FOR MISCELLANEOUS SLAB DETAILS.
7. SEE RAIL STANDARD FOR RAIL ANCHORAGE IN SLAB.
8. BAR LAPS, WHERE REQUIRED, TO BE AS FOLLOWS:
   #4 = 2'-1"
   #5 = 2'-7"
9. SEE ITS SHEETS FOR SUSPENDED CONDUIT INFORMATION AND DETAILS.
10. THE BEAM LOCATED UNDER THE PHASE CONSTR JT LINE WILL HAVE LESS DEAD LOAD DEFLECTION THAN THE OTHER BEAMS CONSTRUCTED AT THE SAME TIME. THIS BEAM WILL NOT DEFLECT ADDITIONALLY WHEN THE REMAINDER OF THE SLAB IS CAST, DUE TO COMPOSITE ACTION ON THE DECK SYSTEM. PRIOR TO COLUMN CONSTRUCTION, CONTRACTOR SHALL PROPOSE BEARING SEAT AND/OR COLUMN ELEVATIONS ADJUSTMENTS TO COMPENSATE FOR THIS ACTION, IF NECESSARY, MAINTAINING SPECIFIED DECK SECTION AND COVER OF DECK REINFORCEMENT. SUBMIT PROPOSAL TO ENGINEER FOR REVIEW AND ACCEPTANCE.

STATE OF TEXAS
TIMOTHY J. ROSS
98465
LICENSED PROFESSIONAL ENGINEER

Timothy J. Ross
8/29/12

HL 93 LOADING

PESC
P.E. Structural Consultants, Inc.
www.PEStructural.com
TBPE Firm No. F-1475

Texas Department of Transportation
© 2012

IH 35W FROM NORTH TARRANT PKWY TO IH 820

211.50' PRESTRESSED CONCRETE I-GIRDER UNIT

SB FRONTAGE RD
OVER BIG FOSSIL CK

SCALE: NTS — SHEET 1 OF 2

DESIGN	FED. RD. DIV. NO.	FEDERAL AID PROJECT NO.		HIGHWAY NO.
TJR	6	(SEE TITLE SHEET)		IH 35W
GRAPHICS: TLS	STATE	DISTRICT	COUNTY	SHEET NO.
CHECK: NRR	TEXAS	FTW	TARRANT	1677
CHECK: AB	CONTROL	SECTION	JOB	
	0014	16	255, ETC.	

DRAWING DATE: 7/13/2012
FILENAME: S3BBR*BFC-SBFR*PB*01.dgn

TABLE OF ESTIMATED QUANTITIES PHASE 2 STEP 1

SPAN	REINF CONC SLAB	PRESTR CONC I-GIRDERS (TX40) ④	CL S CONC (HPC)	CL S CONC (HPC) (BRIDGE SDWLK) ③	REINFORCING STEEL
NO.	SF	LF	CY	CY	LB
1	1,624	243.63	46.5	1.3	10,557
2	3,051	459.50	87.6	2.5	19,832
3	2,531	343.02	71.5	1.9	16,451
TOTAL	7,206	1,046.15	205.6	5.7	46,840

TABLE OF ESTIMATED QUANTITIES PHASE 2 STEP 3A

SPAN	REINF CONC SLAB	PRESTR CONC I-GIRDERS (TX40) ④	CL S CONC (HPC)	REINFORCING STEEL ③
NO.	SF	LF	CY	LB
1	861	97.36	24.2	5,600
2	1,618	183.82	45.5	10,517
3	1,397	140.89	38.9	9,084
TOTAL	3,877	422.07	108.6	25,201

TABLE OF EST QTYS PHASE 2 STEP 3B

SPAN	CL S CONC (HPC) (SDWLK) ④	REINFORCING STEEL ③
NO.	CY	LB
1	7.3	543
2	13.7	1,022
3	10.1	757
TOTAL	31.0	2,322

TABLE OF SECTION DEPTHS

SPAN NO.	GIRDER NO.	"X" AT ℄ BRG	"Y" AT ℄ BRG	②"Z" AT ℄ SPAN
1	1-4, 7	10 1/2"	4'-2 1/2"	10 1/8"
	5-6	10 1/2"	4'-2 1/2"	10"
2	1	11 3/4"	4'-3 3/4"	9 1/2"
	2-6	11 3/4"	4'-3 3/4"	9 5/8"
	7	11 3/4"	4'-3 3/4"	9 3/8"
3	1 & 4	11 1/4"	4'-3 1/4"	9 3/4"
	2 & 3	11 1/4"	4'-3 1/4"	9 1/2"
	5 & 6	11 1/4"	4'-3 1/4"	9 3/8"
	7	11 1/4"	4'-3 1/4"	9 1/8"

SPAN NO.	GIRDER NO.	"A" FT	"B" FT
1	1 & 7	0.009	0.011
	2-6	0.009	0.012
2	1	0.119	0.151
	2-6	0.126	0.160
	7	0.106	0.135
3	1	0.043	0.054
	2	0.048	0.061
	3	0.045	0.057
	4	0.043	0.054
	5	0.043	0.054
	6	0.042	0.053
	7	0.035	0.045

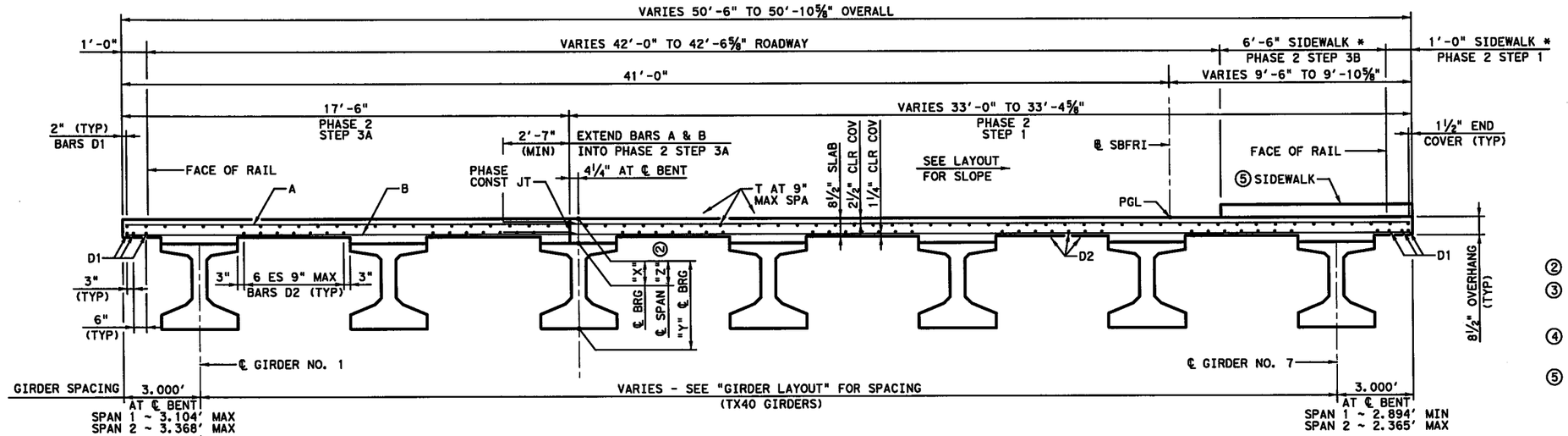

TYPICAL TRANSVERSE SECTION

(SPANS 1 & 2)

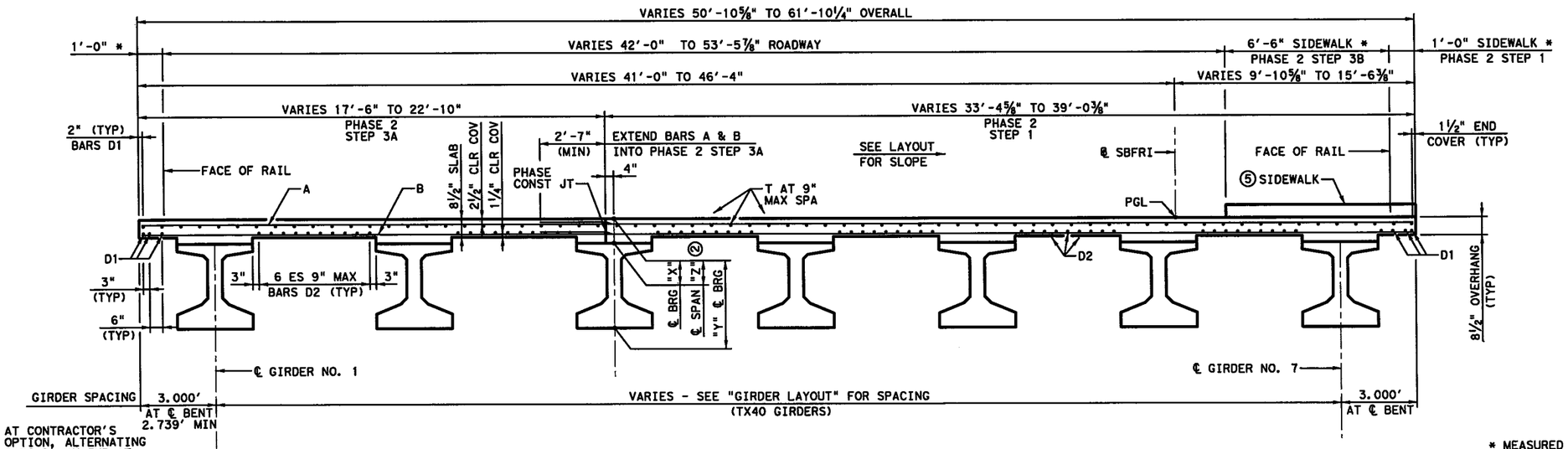

TYPICAL TRANSVERSE SECTION

(SPAN 3)

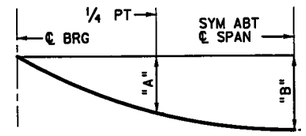

DEAD LOAD DEFLECTION DIAGRAM

CALCULATED DEFLECTIONS SHOWN ARE DUE TO THE CONCRETE SLAB ON INTERIOR GIRDERS ONLY (EC = 5000 KSI). ADJUST VALUES AS REQUIRED FOR EXTERIOR GIRDERS AND IF OPTIONAL SLAB FORMING IS USED. THESE VALUES MAY REQUIRE FIELD VERIFICATION.

② THEORETICAL DIMENSION

③ REINFORCING STEEL WEIGHT IS CALCULATED USING AN APPROXIMATE FACTOR OF 6.5 LBS PER SQ FT FOR BRIDGE DECK AND 1.7 LBS PER SQ FT FOR SIDEWALK.

④ LENGTHS SHOWN ARE BOTTOM OF GIRDER FLANGE LENGTHS WITH ADJUSTMENTS MADE FOR BEAM SLOPE. SEE GIRDER LAYOUT FOR GIRDER LENGTHS.

⑤ SEE BRSM(MOD) STANDARD FOR DETAILS & INFORMATION NOT SHOWN.

* MEASURED PERPENDICULAR TO DECK EDGE

STATE OF TEXAS
TIMOTHY J. ROSS
98465
LICENSED
PROFESSIONAL ENGINEER
7/6/12

HL 93 LOADING

PESC P.E. Structural Consultants, Inc.
www.PEStructural.com
TBPE Firm No. F-1475

Texas Department of Transportation
© 2012

IH 35W FROM NORTH TARRANT PKWY TO IH 820

211.50' PRESTRESSED CONCRETE I-GIRDER UNIT

SB FRONTAGE RD OVER BIG FOSSIL CK

SCALE: NTS — SHEET 2 OF 2

DESIGN	FED.RD. DIV.NO.	FEDERAL AID PROJECT NO.		HIGHWAY NO.
TJR	6	(SEE TITLE SHEET)		IH 35W
GRAPHICS	STATE	DISTRICT	COUNTY	SHEET NO.
TLS	TEXAS	FTW	TARRANT	
CHECK	CONTROL	SECTION	JOB	1678
NRR	0014	16	255, ETC.	
CHECK				
AB				

FILENAME: S3BBR*BFC-SBFR*PB*02.dgn
DRAWING DATE: 7/13/2012

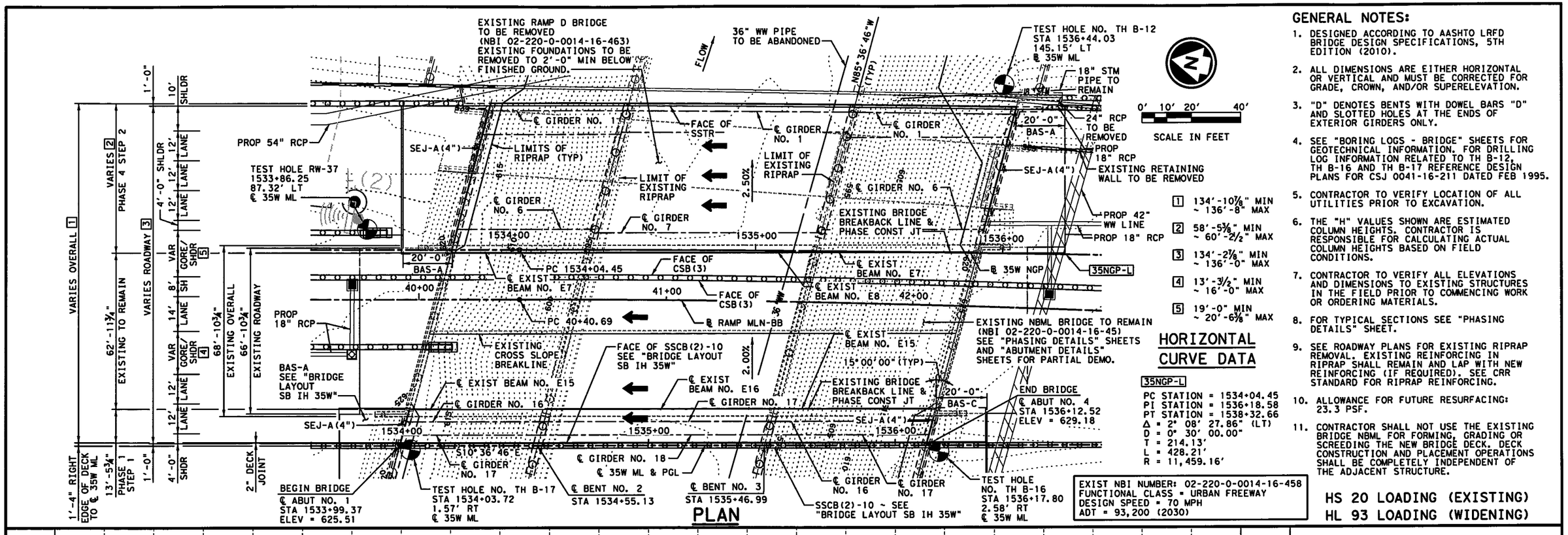

GENERAL NOTES:

1. DESIGNED ACCORDING TO AASHTO LRFD BRIDGE DESIGN SPECIFICATIONS, 5TH EDITION (2010).
2. ALL DIMENSIONS ARE EITHER HORIZONTAL OR VERTICAL AND MUST BE CORRECTED FOR GRADE, CROWN, AND/OR SUPERELEVATION.
3. "D" DENOTES BENTS WITH DOWEL BARS "D" AND SLOTTED HOLES AT THE ENDS OF EXTERIOR GIRDERS ONLY.
4. SEE "BORING LOGS - BRIDGE" SHEETS FOR GEOTECHNICAL INFORMATION. FOR DRILLING LOG INFORMATION RELATED TO TH B-12, TH B-16 AND TH B-17 REFERENCE DESIGN PLANS FOR CSJ 0041-16-211 DATED FEB 1995.
5. CONTRACTOR TO VERIFY LOCATION OF ALL UTILITIES PRIOR TO EXCAVATION.
6. THE "H" VALUES SHOWN ARE ESTIMATED COLUMN HEIGHTS. CONTRACTOR IS RESPONSIBLE FOR CALCULATING ACTUAL COLUMN HEIGHTS BASED ON FIELD CONDITIONS.
7. CONTRACTOR TO VERIFY ALL ELEVATIONS AND DIMENSIONS TO EXISTING STRUCTURES IN THE FIELD PRIOR TO COMMENCING WORK OR ORDERING MATERIALS.
8. FOR TYPICAL SECTIONS SEE "PHASING DETAILS" SHEET.
9. SEE ROADWAY PLANS FOR EXISTING RIPRAP REMOVAL. EXISTING REINFORCING IN RIPRAP SHALL REMAIN AND LAP WITH NEW REINFORCING (IF REQUIRED). SEE CRR STANDARD FOR RIPRAP REINFORCING.
10. ALLOWANCE FOR FUTURE RESURFACING: 23.3 PSF.
11. CONTRACTOR SHALL NOT USE THE EXISTING BRIDGE NBML FOR FORMING, GRADING OR SCREEDING THE NEW BRIDGE DECK. DECK CONSTRUCTION AND PLACEMENT OPERATIONS SHALL BE COMPLETELY INDEPENDENT OF THE ADJACENT STRUCTURE.

1 134'-10⅞" MIN ~ 136'-8" MAX
2 58'-5⅜" MIN ~ 60'-2½" MAX
3 134'-2⅞" MIN ~ 136'-0" MAX
4 13'-3½" MIN ~ 16'-0" MAX
5 19'-0" MIN ~ 20'-6⅜" MAX

HORIZONTAL CURVE DATA

35NGP-L
PC STATION = 1534+04.45
PI STATION = 1536+18.58
PT STATION = 1538+32.66
Δ = 2° 08' 27.86" (LT)
D = 0° 30' 00.00"
T = 214.13'
L = 428.21'
R = 11,459.16'

EXIST NBI NUMBER: 02-220-0-0014-16-458
FUNCTIONAL CLASS = URBAN FREEWAY
DESIGN SPEED = 70 MPH
ADT = 93,200 (2030)

HS 20 LOADING (EXISTING)
HL 93 LOADING (WIDENING)

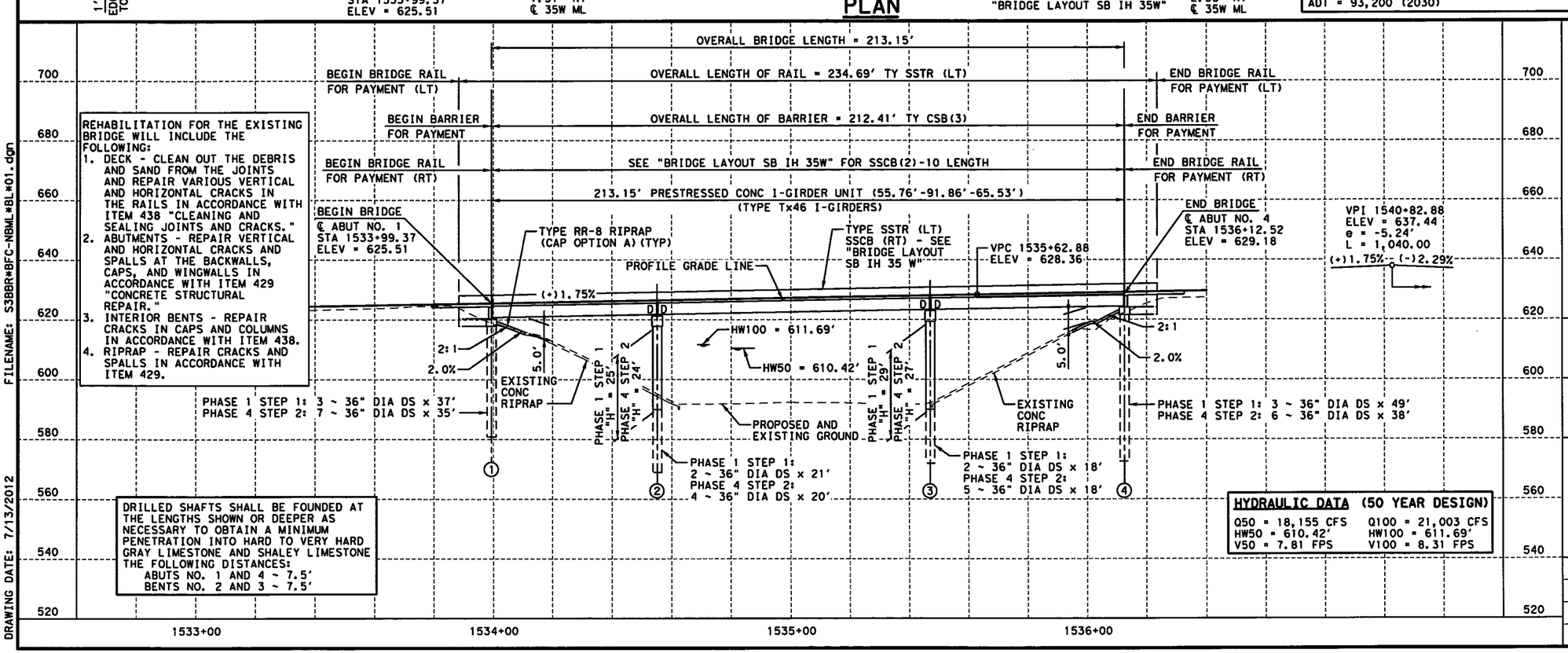

REHABILITATION FOR THE EXISTING BRIDGE WILL INCLUDE THE FOLLOWING:
1. DECK - CLEAN OUT THE DEBRIS AND SAND FROM THE JOINTS AND REPAIR VARIOUS VERTICAL AND HORIZONTAL CRACKS IN THE RAILS IN ACCORDANCE WITH ITEM 438 "CLEANING AND SEALING JOINTS AND CRACKS."
2. ABUTMENTS - REPAIR VERTICAL AND HORIZONTAL CRACKS AND SPALLS AT THE BACKWALLS, CAPS, AND WINGWALLS IN ACCORDANCE WITH ITEM 429 "CONCRETE STRUCTURAL REPAIR."
3. INTERIOR BENTS - REPAIR CRACKS IN CAPS AND COLUMNS IN ACCORDANCE WITH ITEM 438.
4. RIPRAP - REPAIR CRACKS AND SPALLS IN ACCORDANCE WITH ITEM 429.

DRILLED SHAFTS SHALL BE FOUNDED AT THE LENGTHS SHOWN OR DEEPER AS NECESSARY TO OBTAIN A MINIMUM PENETRATION INTO HARD TO VERY HARD GRAY LIMESTONE AND SHALEY LIMESTONE THE FOLLOWING DISTANCES:
ABUTS NO. 1 AND 4 ~ 7.5'
BENTS NO. 2 AND 3 ~ 7.5'

HYDRAULIC DATA (50 YEAR DESIGN)

Q50 = 18,155 CFS	Q100 = 21,003 CFS
HW50 = 610.42'	HW100 = 611.69'
V50 = 7.81 FPS	V100 = 8.31 FPS

STATE OF TEXAS
TIMOTHY J. ROSS
98465
LICENSED
PROFESSIONAL ENGINEER
8/29/12

P.E. Structural Consultants, Inc.
www.PEStructural.com
TBPE Firm No. F-1475

Texas Department of Transportation
© 2012

IH 35W FROM NORTH TARRANT PKWY TO IH 820

BRIDGE LAYOUT
NB IH 35W
OVER BIG FOSSIL CK

SCALE: 1" = 40' SHEET 1 OF 1

DESIGN	FED. RD. DIV. NO.	FEDERAL AID PROJECT NO.		HIGHWAY NO.
TJR	6	(SEE TITLE SHEET)		IH 35W
GRAPHICS TLS	STATE	DISTRICT	COUNTY	SHEET NO.
CHECK NRR	TEXAS	FTW	TARRANT	1679
CHECK AB	CONTROL 0014	SECTION 16	JOB 255, ETC.	

FILENAME: S3BBR*BFC-NBML*BL*01.dgn
DRAWING DATE: 7/13/2012

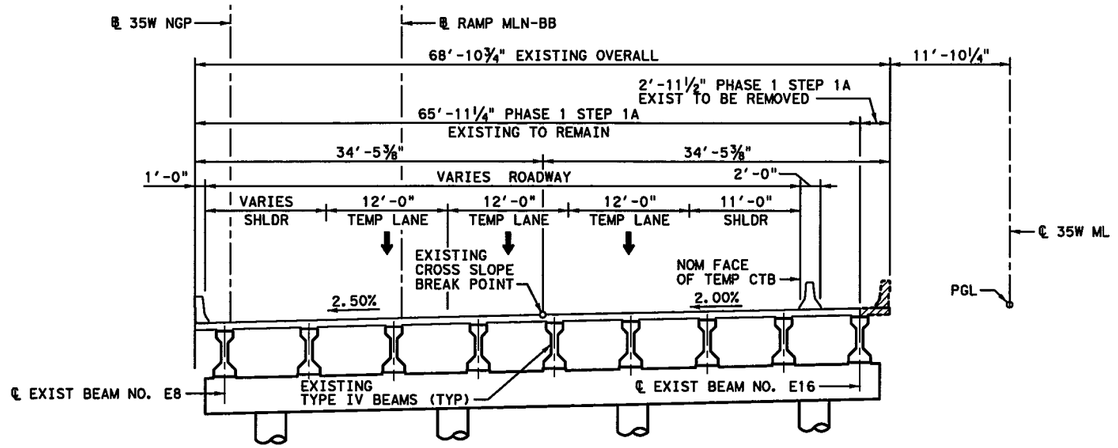

PHASE 1 STEP 1A CONSTRUCTION TYPICAL SECTION

(NTS)

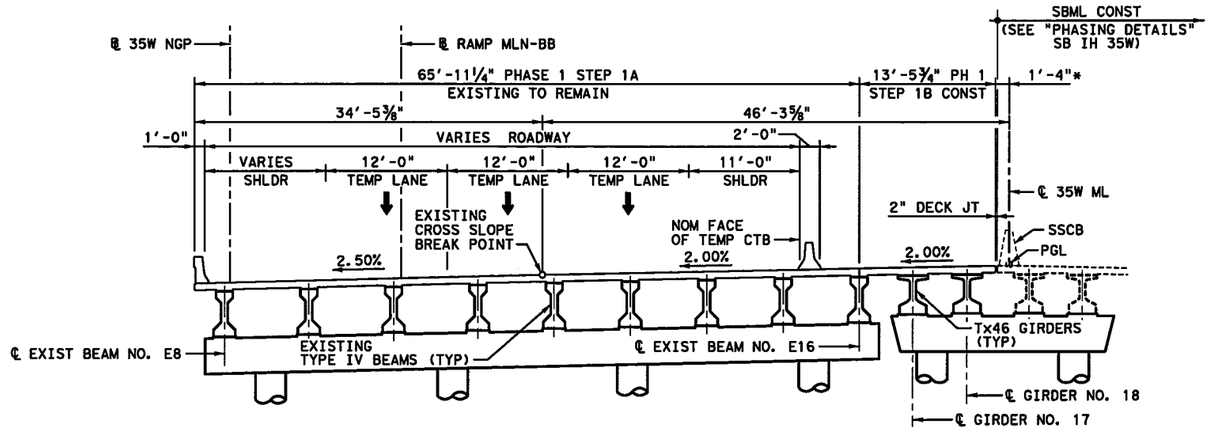

PHASE 1 STEP 1B CONSTRUCTION TYPICAL SECTION

(NTS)

* RIGHT EDGE OF DECK TO ℄ 35W ML

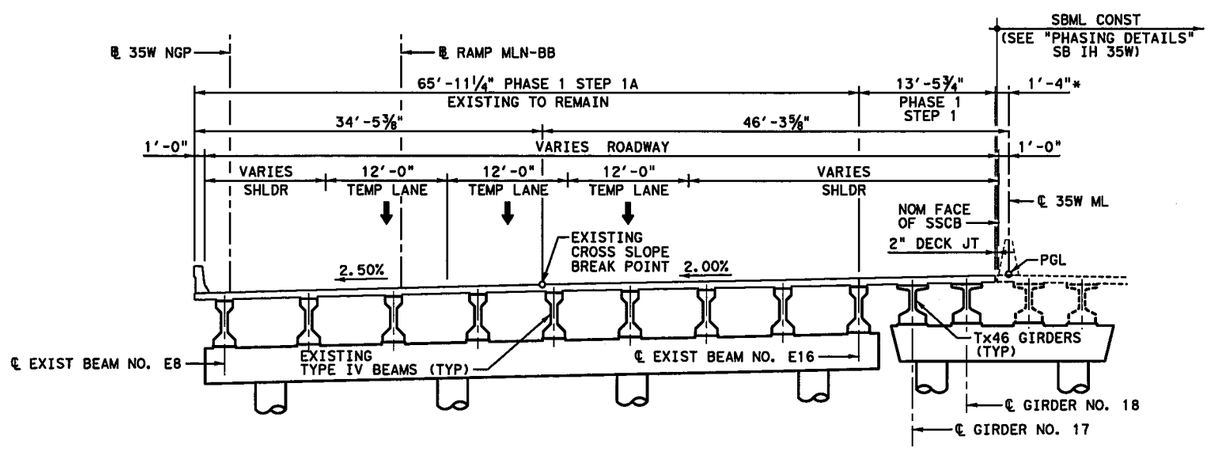

COMPLETED PHASE 1 STEP 1 TYPICAL SECTION

(NTS)

NOTE: DIMENSIONS ARE TAKEN FROM EXISTING AS-BUILT PLANS. SECTION SHOWS SPAN 2 BEAMS.

STATE OF TEXAS
TIMOTHY J. ROSS
98465
LICENSED
PROFESSIONAL ENGINEER

8/29/12

HS 20 LOADING (EXISTING)
HL 93 LOADING (WIDENING)

PESC
P.E. Structural Consultants, Inc.
www.PEStructural.com
TBPE Firm No. F-1475

Texas Department of Transportation
© 2012

IH 35W FROM NORTH TARRANT PKWY TO IH 820

PHASING DETAILS
NB IH 35W
OVER BIG FOSSIL CK

SCALE: NTS — SHEET 1 OF 2

DESIGN	FED.RD. DIV.NO.	FEDERAL AID PROJECT NO.		HIGHWAY NO.
TJR	6	(SEE TITLE SHEET)		IH 35W
GRAPHICS	STATE	DISTRICT	COUNTY	SHEET NO.
TLS	TEXAS	FTW	TARRANT	
CHECK	CONTROL	SECTION	JOB	1680
NRR	0014	16	255, ETC.	
CHECK				
AB				

DRAWING DATE: 7/13/2012 FILENAME: S3BBR*BFC-NBML*PD*01.dgn

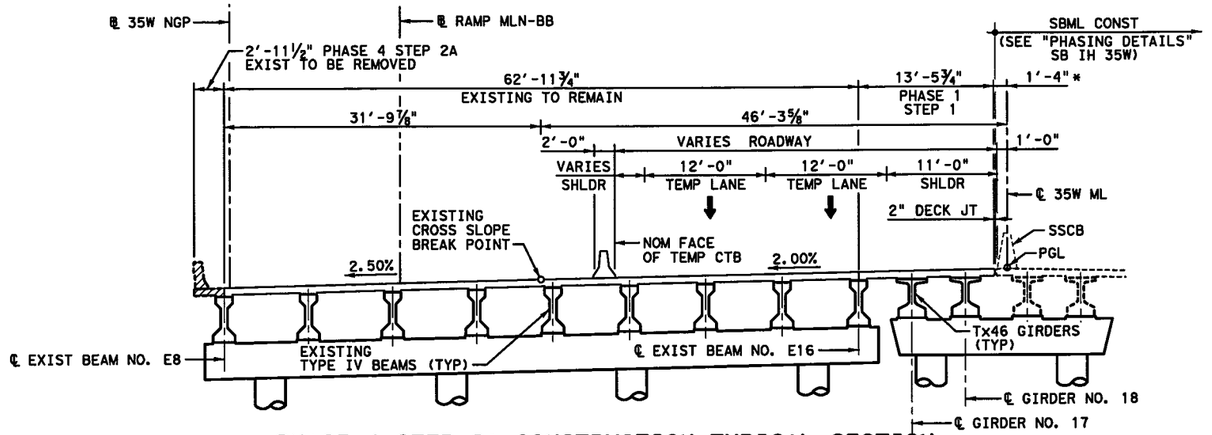

PHASE 4 STEP 2A CONSTRUCTION TYPICAL SECTION

(NTS)

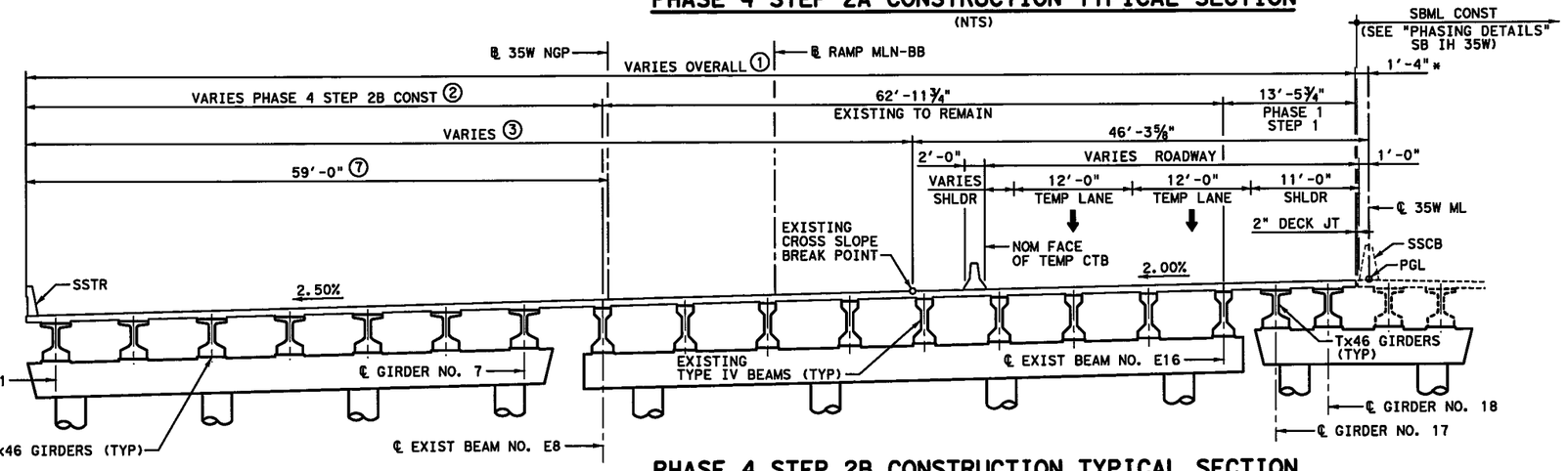

PHASE 4 STEP 2B CONSTRUCTION TYPICAL SECTION

(NTS)

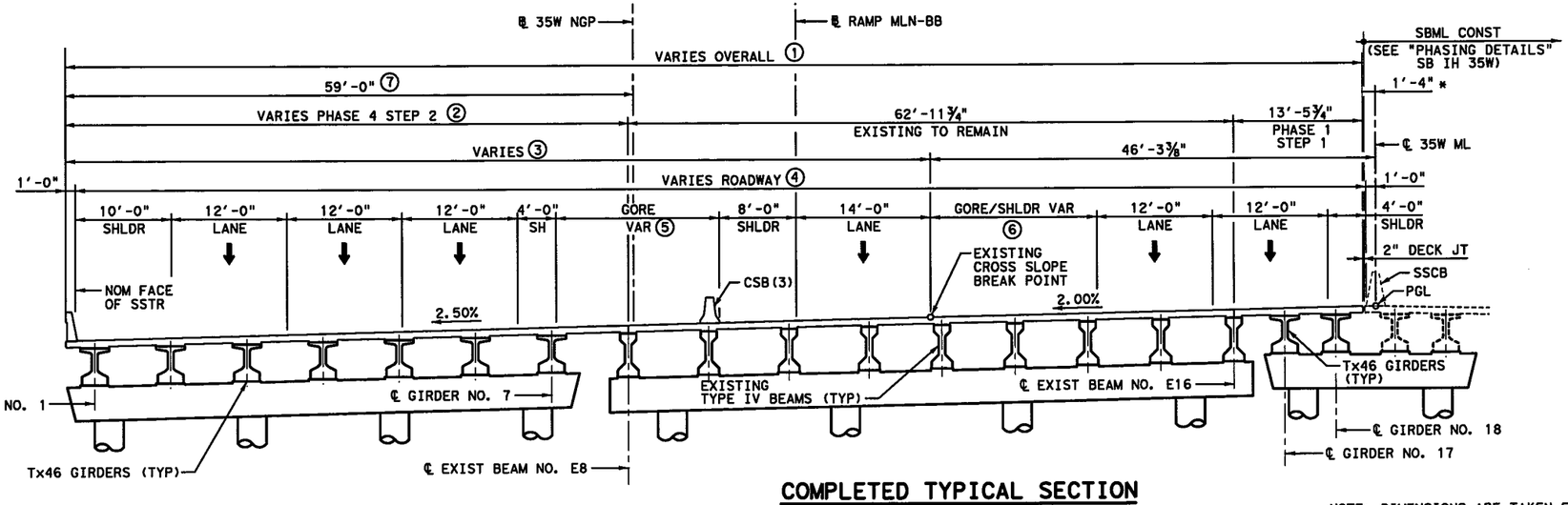

COMPLETED TYPICAL SECTION

(NTS)

NOTE: DIMENSIONS ARE TAKEN FROM EXISTING AS-BUILT PLANS. SECTION SHOWS SPAN 2 BEAMS.

① 134'-10⅞" MIN ~ 136'-8" MAX
② 58'-5⅜" MIN ~ 60'-2½" MAX
③ 89'-11¼" MIN ~ 91'-8⅜" MAX
④ 134'-2⅞" MIN ~ 136'-0" MAX
⑤ 19'-0" MIN ~ 20'-6⅜" MAX
⑥ 13'-3½" MIN ~ 16'-0" MAX
⑦ MEASURED RADIALLY FROM ℄ 35W NGP

* RIGHT EDGE OF DECK TO ℄ IH 35W ML

STATE OF TEXAS
TIMOTHY J. ROSS
98465
LICENSED PROFESSIONAL ENGINEER
8/29/12

HS 20 LOADING (EXISTING)
HL 93 LOADING (WIDENING)

PESC
P.E. Structural Consultants, Inc.
www.PEStructural.com
TBPE Firm No. F-1475

Texas Department of Transportation
© 2012

IH 35W FROM NORTH TARRANT PKWY TO IH 820

PHASING DETAILS

NB IH 35W

OVER BIG FOSSIL CK

SCALE: NTS — SHEET 2 OF 2

DESIGN	FED.RD. DIV.NO.	FEDERAL AID PROJECT NO.		HIGHWAY NO.
TJR	6	(SEE TITLE SHEET)		IH 35W
GRAPHICS	STATE	DISTRICT	COUNTY	SHEET NO.
TLS	TEXAS	FTW	TARRANT	1681
CHECK	CONTROL	SECTION	JOB	
NRR	0014	16	255, ETC.	
CHECK				
AB				

FILENAME: S3BBR*BFC-NBML*PD*02.dgn
DRAWING DATE: 7/13/2012

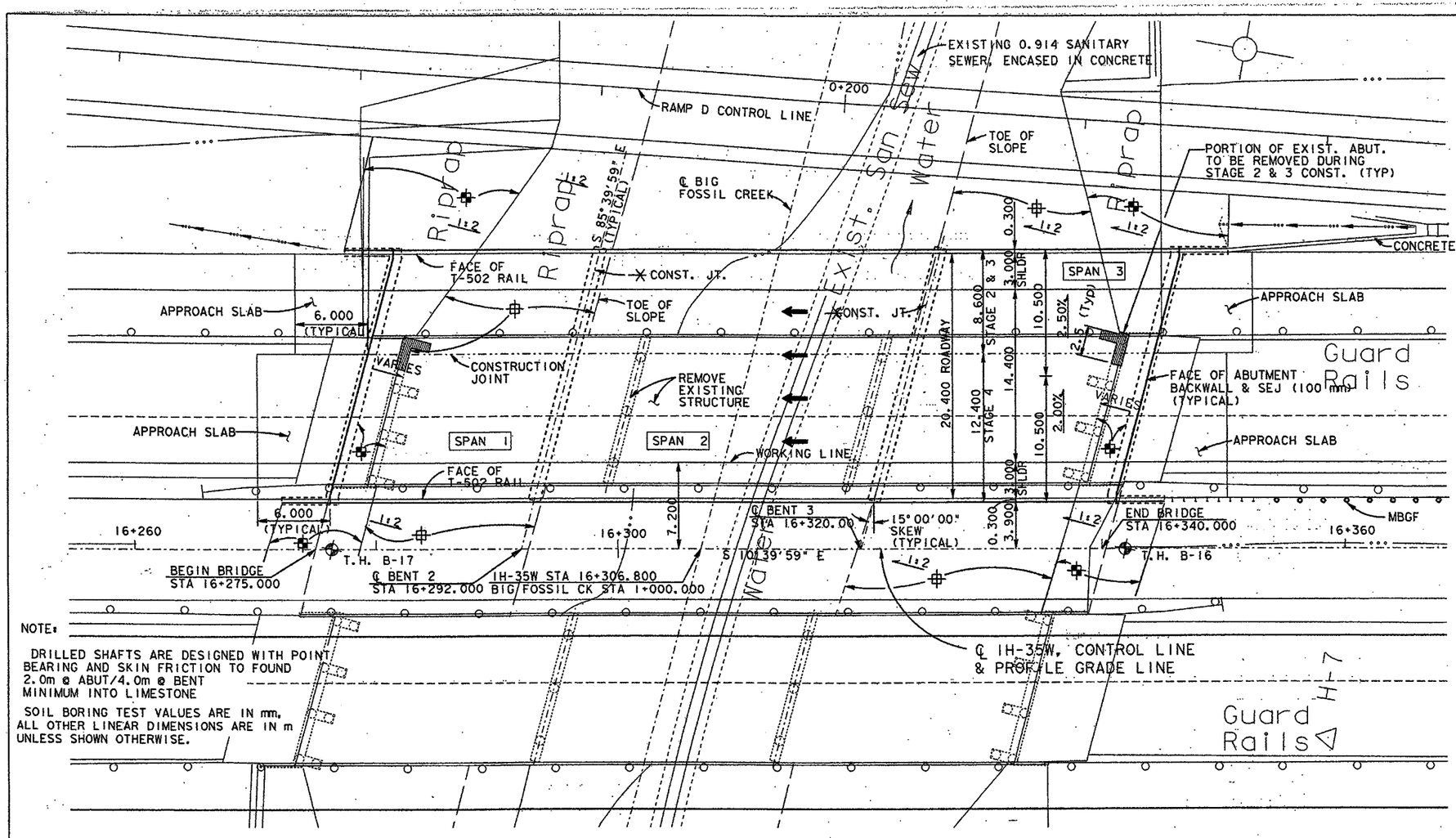

NOTE:

DRILLED SHAFTS ARE DESIGNED WITH POINT BEARING AND SKIN FRICTION TO FOUND 2.0m @ ABUT/4.0m @ BENT MINIMUM INTO LIMESTONE

SOIL BORING TEST VALUES ARE IN mm, ALL OTHER LINEAR DIMENSIONS ARE IN m UNLESS SHOWN OTHERWISE.

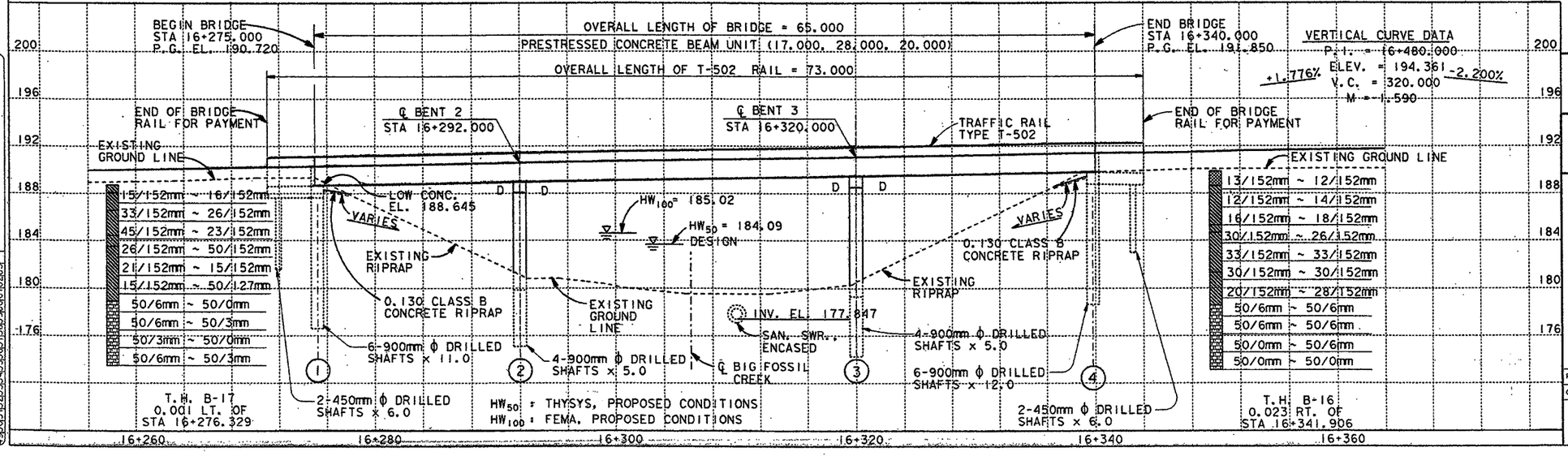

LEVELS DISPLAYED

ACC:	1	2	3	4	5	6	7	8	9	10	11	12	13	14	15	16
1	12	23	34	45	56	67	78	89	910	1011	1112	1213	1314	1415	1516	1617
2	13	24	35	46	57	68	79	810	911	1012	1113	1214	1315	1416	1517	1618
3	14	25	36	47	58	69	710	811	912	1013	1114	1215	1316	1417	1518	1619
4	15	26	37	48	59	610	711	812	913	1014	1115	1216	1317	1418	1519	1620
5	16	27	38	49	510	611	712	813	914	1015	1116	1217	1318	1419	1520	1621

SCALE IN METERS
0 2 5 10m
SCALE: 1:200

TEST HOLE LEGEND

- CONCRETE
- ASPHALT
- FILL
- CLAY
- SHALE
- LIMESTONE
- LIMESTONE WITH CLAY
- LIMESTONE WITH SHALE

BEAM END TREATMENT REQUIRED AT INTERIOR BENTS (SEE "MISC. BRIDGE DETAILS" STANDARD SHT.)

LIMIT OF EXISTING RIPRAP TO REMAIN

LIMIT OF BRIDGE RIPRAP FOR PAYMENT

DESIGN SPEED = 110 KM/H
REPLACEMENT BRIDGE
NBI # 02-220-0-0014-16-458
PSN # 0014-16-458

STATE OF TEXAS
DANIEL J.C. COPPS III
64481
REGISTERED PROFESSIONAL ENGINEER

The seal appearing on this document was authorized by Daniel J.C. Copps III, P.E. 64481, on August 8, 1997

FOR CONTRACTOR INFORMATION ONLY

MS18 LOADING

SHEET 1 OF 2

Brown & Root, Inc.
Houston, Texas

Turner Collie & Braden Inc.
ENGINEERS• PLANNERS• PROJECT MANAGERS

Texas Department of Transportation
Design Division (Bridge)

BRIDGE LAYOUT

BIG FOSSIL CREEK BRIDGE
NORTHBOUND MAINLANES

FILE: D7ILOA04.DGN	DN: TCB	CK: BR	DW: TCB	CK: BR
ORIG DATE:	DIST	FED REG	FEDERAL AID PROJECT #	SHEET
REVISIONS	02	6	DPI 0140-(001)	1682
	COUNTY	CONTROL	SECT	JOB	HIGHWAY
	TARRANT	0014	16	211	IH-35W

STAGE 1 INVOLVES NO BRIDGE CONSTRUCTION. TRAFFIC LOCATION SHIFTS FROM EXISTING LOCATION TO ACCOMMODATE REPLACEMENT OF ASPHALT ROADWAY INSIDE SHOULDER. SEE ROADWAY CONSTRUCTION STAGING DRAWINGS.

STAGE 1

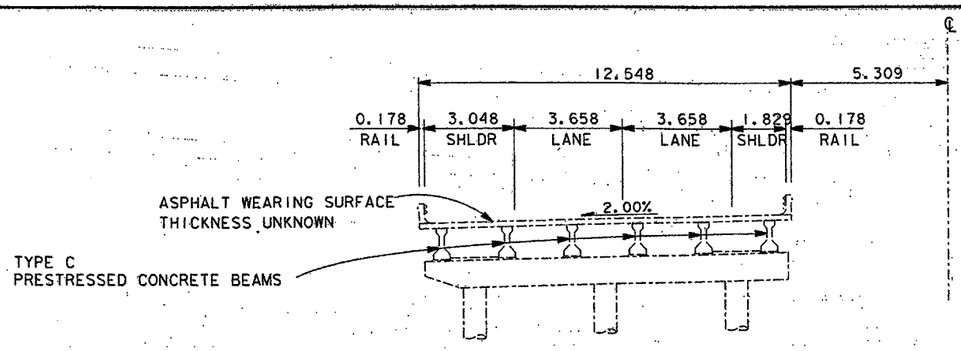

EXISTING STRUCTURE

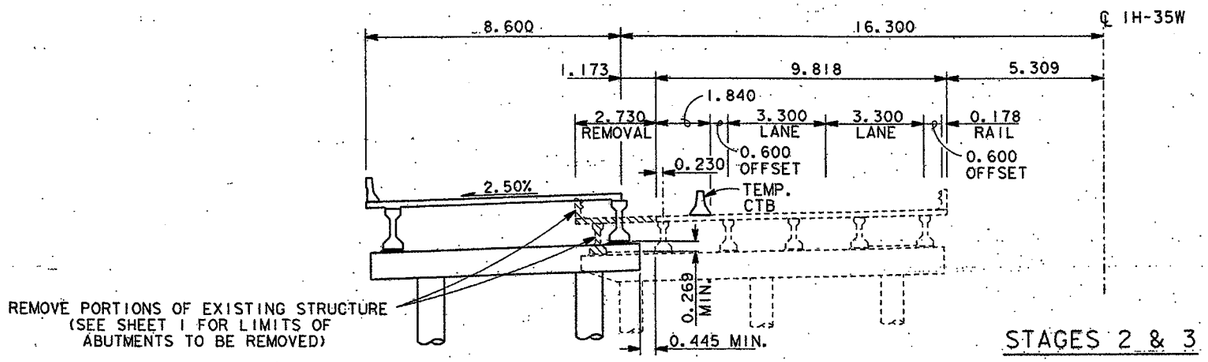

STAGES 2 & 3

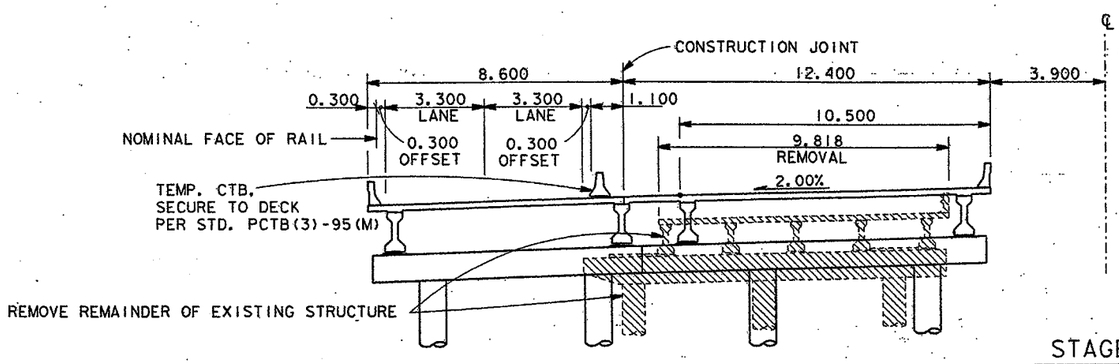

STAGE 4

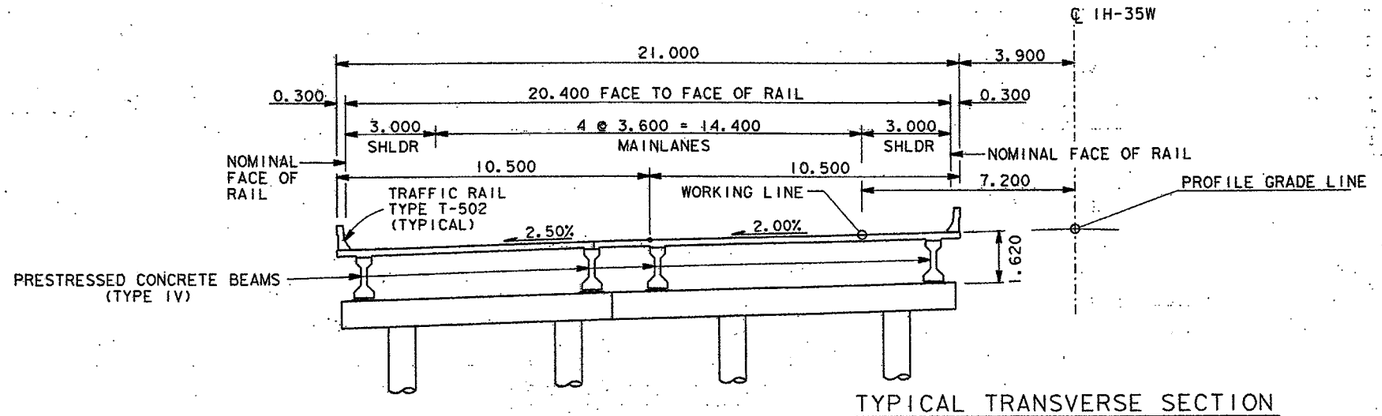

TYPICAL TRANSVERSE SECTION

NOTE:
ALL LINEAR DIMENSIONS ARE IN METERS UNLESS SHOWN OTHERWISE.

SCALE IN METERS
0 1 2 4 6m
SCALE: 1:100

STATE OF TEXAS
DANIEL J.C. COPPS III
64481
PROFESSIONAL ENGINEER

The seal appearing on this document was authorized by Daniel J.C. Copps III, P.E. 64481, on August 8, 1997

FOR CONTRACTOR INFORMATION ONLY

MS18 LOADING

SHEET 2 OF 2

Brown & Root, Inc.
Houston, Texas

Turner Collie & Braden Inc.
ENGINEERS PLANNERS PROJECT MANAGERS

Texas Department of Transportation
Design Division (Bridge)

BRIDGE LAYOUT

BIG FOSSIL CREEK BRIDGE NORTHBOUND MAINLANES

FILE: D71LOA05.DGN	DN: TCB	CK: BR	DW: TCB	CK: BR
ORIG DATE:	DIST	FED REG	FEDERAL AID PROJECT #	SHEET
REVISIONS	02	6	DPI 0101 (001)	1683
	COUNTY		CONTROL	SECT	JOB	HIGHWAY
	TARRANT		0014	16	211	IH-35W

52

LEVELS DISPLAYED
1 2 3 4 5 6 7 8 9 10 11 12 31 41 51 61 ACC:
7 18 19 20 21 22 23 24 25 26 27 28 29 30 31 32
33 34 35 36 37 38 39 40 41 42 43 44 45 46 47 48
49 50 51 52 53 54 55 56 57 58 59 60 61 62 63

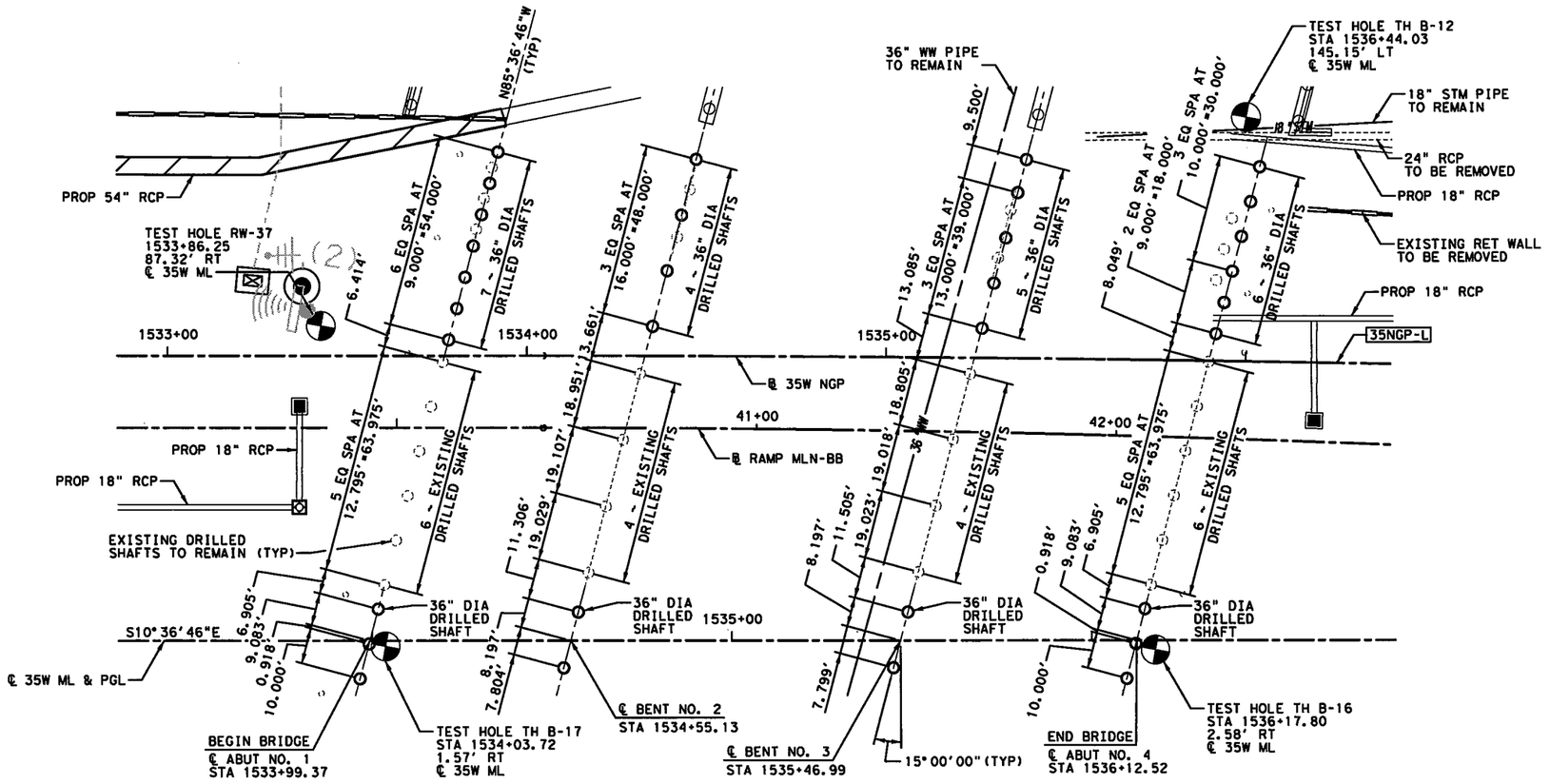

PLAN

0' 20' 40'

SCALE IN FEET

GENERAL NOTES:

1. FOR ANY TEMPORARY SHORING REQUIRED AT INTERIOR BENT LOCATIONS, FOLLOW TXDOT STANDARD SPECIFICATION ITEM 403.
2. SEE "BORING LOGS - BRIDGE" SHEETS FOR GEOTECHNICAL INFORMATION. FOR DRILLING LOG INFORMATION RELATED TO TH B-12, TH B-16 AND TH B-17 REFERENCE DESIGN PLANS FOR CSJ 0041-16-211 DATED FEB 1995.
3. ◓ DENOTES TEST HOLE LOCATION.
4. CONTRACTOR TO VERIFY LOCATION OF ALL UTILITIES PRIOR TO EXCAVATION.

HORIZONTAL CURVE DATA

35NGP-L

PC STATION = 1534+04.45
PI STATION = 1536+18.58
PT STATION = 1538+32.66
Δ = 2° 08' 27.86" (LT)
D = 0° 30' 00.00"
T = 214.13'
L = 428.21'
R = 11,459.16'

STATE OF TEXAS
TIMOTHY J. ROSS
98465
LICENSED
PROFESSIONAL ENGINEER
7/6/12

HS 20 LOADING (EXISTING)
HL 93 LOADING (WIDENING)

PESC P.E. Structural Consultants, Inc.
www.PEStructural.com
TBPE Firm No. F-1475

Texas Department of Transportation
© 2012

IH 35W FROM NORTH TARRANT PKWY TO IH 820

FOUNDATION LAYOUT

NB IH 35W

OVER BIG FOSSIL CK

SCALE: 1" = 40' SHEET 1 OF 1

DESIGN	FED.RD. DIV.NO.	FEDERAL AID PROJECT NO.		HIGHWAY NO.
TJR	6	(SEE TITLE SHEET)		IH 35W
GRAPHICS	STATE	DISTRICT	COUNTY	SHEET NO.
TLS	TEXAS	FTW	TARRANT	1684
CHECK	CONTROL	SECTION	JOB	
NRR	0014	16	255, ETC.	
CHECK				
AB				

DRAWING DATE: 7/13/2012 FILENAME: S3BBR*BFC-NBML*FL*01.dgn

SUMMARY OF ESTIMATED QUANTITIES

	BID ITEM	104 2009	416 2004	420 2042	422 2008	425 2067	428 2002	429 2007	429 2008	430 2126	430 2232	432 2002	438 2002	438 2006	450 2102
	BID ITEM DESCRIPTION	REMOVING CONC (RIPRAP)	DRILL SHAFT	CL C CONC (HPC)	REINF CONC SLAB (EXT SLAB) (HPC) (CL S)	PRESTR CONC GIRDER (TX46)	CONC SURF TREAT (CLASS II)	CNC STR REP (HORIZONTAL)	CNC STR REP (VERTICAL OR OVERHEAD)	CL C CONC FOR EXT STR (HPC)	CL S CONC FOR EXT STR (HPC)	RIPRAP (CONC)	CLEAN AND SEAL EXIST JOINTS	CLEAN AND SEAL CRACKS	RAIL (TYPE SSTR) (HPC)
	BRIDGE ELEMENT		(36 IN)	(BENT)						(ABUT)	(APPR SLAB)	(5 IN)			
		SY	LF	CY	SF	LF	SY	SF	SF	CY	CY	CY	LF	LF	LF
PHASE 1 STEP 1	2 - ABUTMENTS	36	258				90	5	22	25.2	71	5		14	
	2 - INTERIOR BENTS		78	50.0			50		34					9	
	1 - 213.150' PRESTRESSED CONCRETE I-GIRDER UNIT (SPANS 1-3)				2,873	423.32	404						72		
	PHASE 1 STEP 1 TOTAL	36	336	50.0	2,873	423.32	544	5	56	25.2	71	5	72	23	0.0
PHASE 4 STEP 2	2 - ABUTMENTS	115	473				243	5	22	62.6	131	16		14	
	2 - INTERIOR BENTS		170	110.8			117		34					9	
	1 - 213.150' PRESTRESSED CONCRETE I-GIRDER UNIT (SPANS 1-3)				12,706	1,360.88	1,503						72		234.7
	PHASE 4 STEP 2 TOTAL	115	643	110.8	12,706	1,360.88	1,863	5	56	62.6	131	16	72	23	234.7
	TOTALS	151	979	160.8	15,579	1,784.20	2,407	10	112	87.8	202	21	144	46	234.7

SUMMARY OF ESTIMATED QUANTITIES

	BID ITEM	454 2001	514 2065	545 2001
	BID ITEM DESCRIPTION	SEALED EXPANSION JOINT (4 IN) (SEJ-A)	PRM CON TRF BAR (SAFETY SH) (TY 1) (HPC)	CRASH CUSH ATTEN (INSTL)
	BRIDGE ELEMENT			
		LF	LF	EA
PHASE 1 STEP 1	2 - ABUTMENTS	30		
	2 - INTERIOR BENTS			
	1 - 213.150' PRESTRESSED CONCRETE I-GIRDER UNIT (SPANS 1-3)			
	PHASE 1 STEP 1 TOTAL	30	0	0
PHASE 4 STEP 2	2 - ABUTMENTS	122		1
	2 - INTERIOR BENTS			
	1 - 213.150' PRESTRESSED CONCRETE I-GIRDER UNIT (SPANS 1-3)		213	
	PHASE 4 STEP 2 TOTAL	122	213	1
	TOTALS	152	213	1

BEARING SEAT ELEVATIONS

BENT 1 (FWD)		BEAM 1	BEAM 2	BEAM 3	BEAM 4	BEAM 5	BEAM 6	BEAM 7	BEAM 8
		618.076	618.271	618.465	618.658	618.852	619.045	619.239	619.408
		BEAM 9	BEAM 10	BEAM 11	BEAM 12	BEAM 13	BEAM 14	BEAM 15	BEAM 16
		619.578	619.748	619.896	620.013	620.129	620.245	620.361	620.441
		BEAM 17							
		620.522							
BENT 2	(BK)	BEAM 1	BEAM 2	BEAM 3	BEAM 4	BEAM 5	BEAM 6	BEAM 7	BEAM 8
	(FWD)	619.016	619.209	619.403	619.596	619.790	619.983	620.177	620.346
		618.884	619.062	619.226	619.390	619.553	619.717	619.881	620.045
	(BK)	BEAM 9	BEAM 10	BEAM 11	BEAM 12	BEAM 13	BEAM 14	BEAM 15	BEAM 16
	(FWD)	620.516	620.686	620.834	620.950	621.067	621.183	621.299	621.379
		620.215	620.384	620.554	620.703	620.819	620.935	621.051	621.167
	(BK)	BEAM 17	BEAM 18						
	(FWD)	621.460	621.328						
		621.248							
BENT 3	(BK)	BEAM 1	BEAM 2	BEAM 3	BEAM 4	BEAM 5	BEAM 6	BEAM 7	BEAM 8
	(FWD)	620.460	620.625	620.790	620.955	621.120	621.285	621.449	621.613
		620.660	620.869	621.059	621.248	621.437	621.626	621.814	621.985
	(BK)	BEAM 9	BEAM 10	BEAM 11	BEAM 12	BEAM 13	BEAM 14	BEAM 15	BEAM 16
	(FWD)	621.783	621.953	622.123	622.271	622.387	622.504	622.620	622.736
		622.155	622.325	622.473	622.589	622.705	622.821	622.938	623.018
	(BK)	BEAM 17	BEAM 18						
	(FWD)	622.816	622.897						
		623.098							
BENT 4	(BK)	BEAM 1	BEAM 2	BEAM 3	BEAM 4	BEAM 5	BEAM 6	BEAM 7	BEAM 8
		621.658	621.854	622.050	622.245	622.441	622.636	622.830	623.006
		BEAM 9	BEAM 10	BEAM 11	BEAM 12	BEAM 13	BEAM 14	BEAM 15	BEAM 16
		623.181	623.357	623.510	623.631	623.752	623.872	623.992	624.076
		BEAM 17							
		624.159							

STATE OF TEXAS
TIMOTHY J. ROSS
98465
LICENSED
PROFESSIONAL ENGINEER

Timothy J. Ross
8/29/12

HS 20 LOADING (EXISTING)
HL 93 LOADING (WIDENING)

PESC
P.E. Structural Consultants, Inc.
www.PEStructural.com
TBPE Firm No. F-1475

Texas Department of Transportation
© 2012

IH 35W FROM NORTH TARRANT PKWY TO IH 820

EST. QUANTITIES AND BEARING SEAT ELEV.

NB IH 35W

OVER BIG FOSSIL CK

SCALE: NTS — SHEET 1 OF 1

DESIGN	FED.RD. DIV.NO.	FEDERAL AID PROJECT NO.		HIGHWAY NO.
TJR	6	(SEE TITLE SHEET)		IH 35W
GRAPHICS TLS	STATE	DISTRICT	COUNTY	SHEET NO.
CHECK NRR	TEXAS	FTW	TARRANT	1685
CHECK AB	CONTROL	SECTION	JOB	
	0014	16	255, ETC.	

FILENAME: S3BBR*BFC-NBML*EQ*01.DGN
DRAWING DATE: 7/13/2012

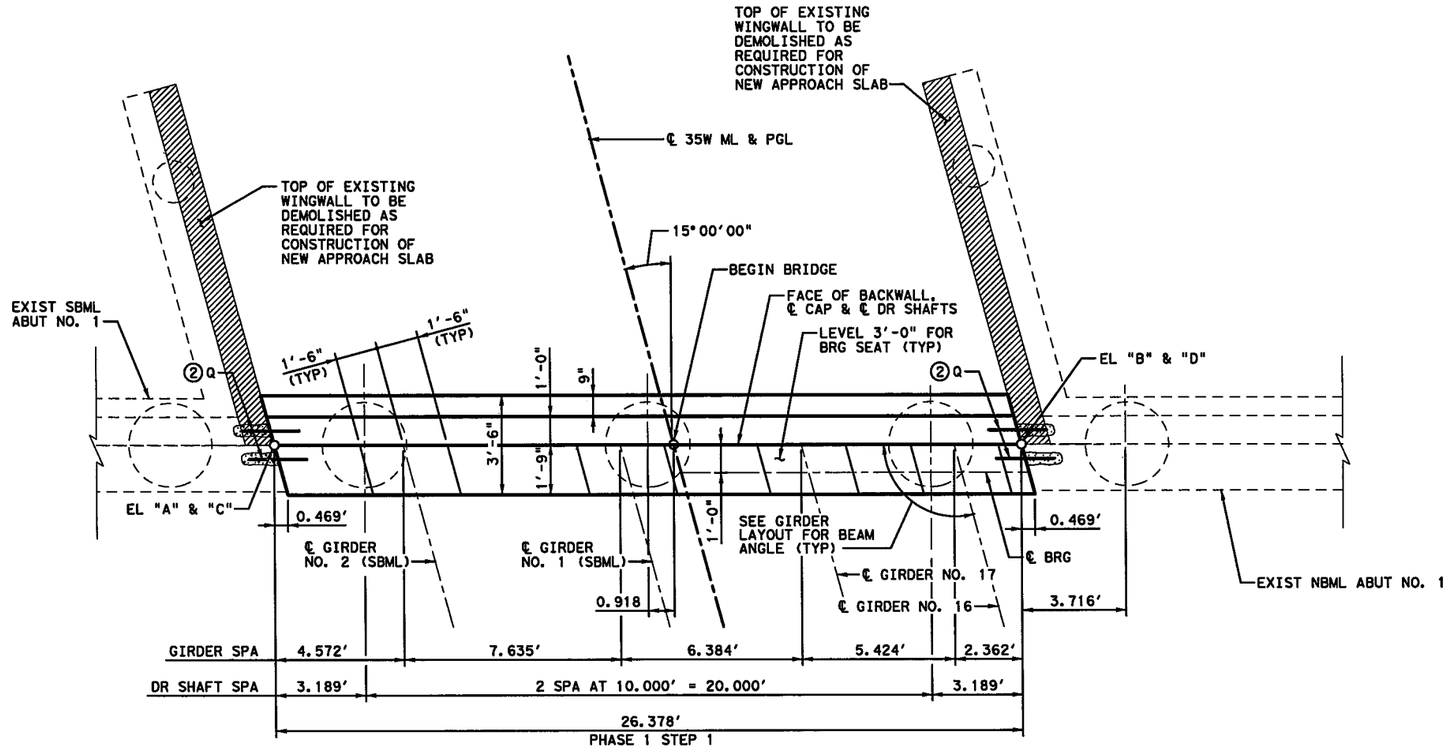

PLAN
(PHASE 1 STEP 1) ①

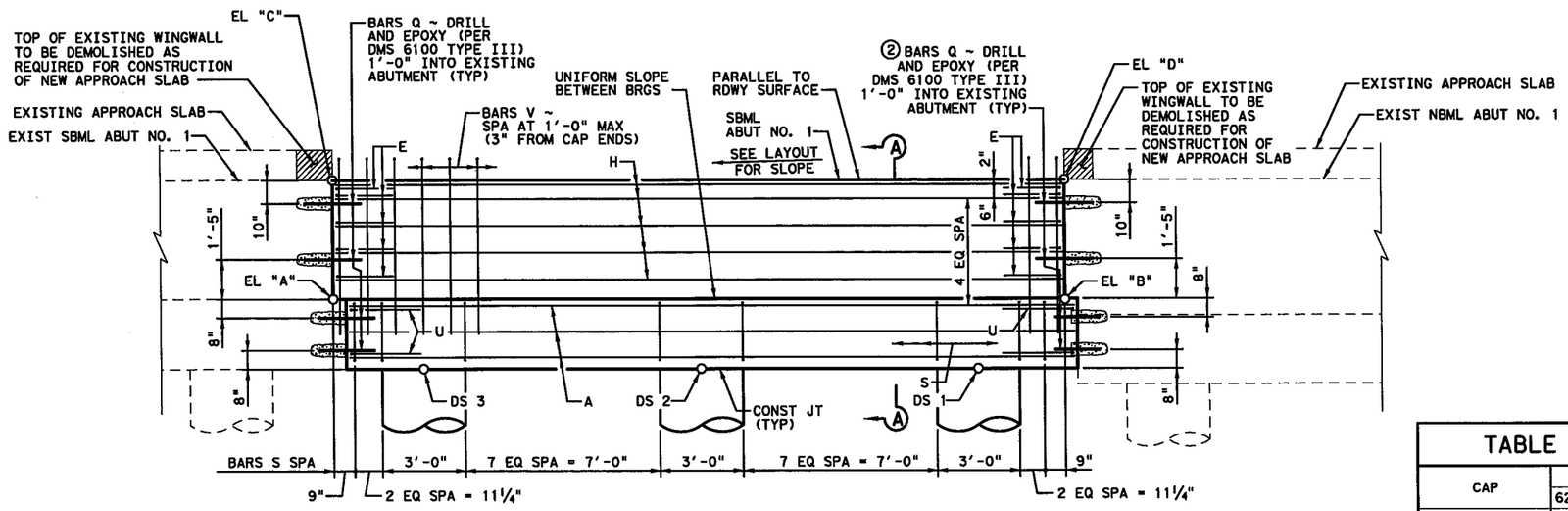

ELEVATION
(PHASE 1 STEP 1)

TABLE OF ELEVATIONS				
CAP	"A"	"B"	"C"	"D"
	620.216	620.325	624.087	624.242
TOP OF DS	DS 1	DS 2	DS 3	---
	617.811	617.770	617.729	---
SHAFT TIP	580.811	580.770	580.729	---
AS- BUILT SHAFT TIP				---

GENERAL NOTES:

1. DESIGNED ACCORDING TO AASHTO LRFD BRIDGE DESIGN SPECIFICATIONS, 5TH EDITION (2010).
2. CLASS "C" (HPC) CONCRETE STRENGTH F'C = 3,600 PSI.
3. ALL CAP AND WALL REINFORCING SHALL BE GRADE 60.
4. SEE FD STANDARD FOR ALL FOUNDATION DETAILS AND NOTES.
5. CALCULATED FOUNDATION LOADS:
   CAP DRILLED SHAFTS = PHASE 1: 75 TONS / D.S.
   CAP DRILLED SHAFTS = PHASE 3: 55 TONS / D.S.

① ALL DIMENSIONS TO EXISTING STRUCTURE SHALL BE VERIFIED IN THE FIELD.

② SEE CORNER DETAILS, SHEET 3 OF 3, FOR ADDITIONAL INFORMATION.

STATE OF TEXAS
TIMOTHY J. ROSS
98465
LICENSED
PROFESSIONAL ENGINEER
7/6/12

HS 20 LOADING (EXISTING)
HL 93 LOADING (WIDENING)

PESC P.E. Structural Consultants, Inc.
www.PEStructural.com
TBPE Firm No. F-1475

Texas Department of Transportation
© 2012

IH 35W FROM NORTH TARRANT PKWY TO IH 820

ABUTMENT NO. 1
NB IH 35W
OVER BIG FOSSIL CK

SCALE: NTS — SHEET 1 OF 3

DESIGN	FED. RD. DIV. NO.	FEDERAL AID PROJECT NO.		HIGHWAY NO.
TJR	6	(SEE TITLE SHEET)		IH 35W
GRAPHICS	STATE	DISTRICT	COUNTY	SHEET NO.
TLS	TEXAS	FTW	TARRANT	
CHECK	CONTROL	SECTION	JOB	1686
NRR	0014	16	255, ETC.	
CHECK				
AB				

FILENAME: S3BBR*BFC-NBML*AB*01.dgn
DRAWING DATE: 7/13/2012

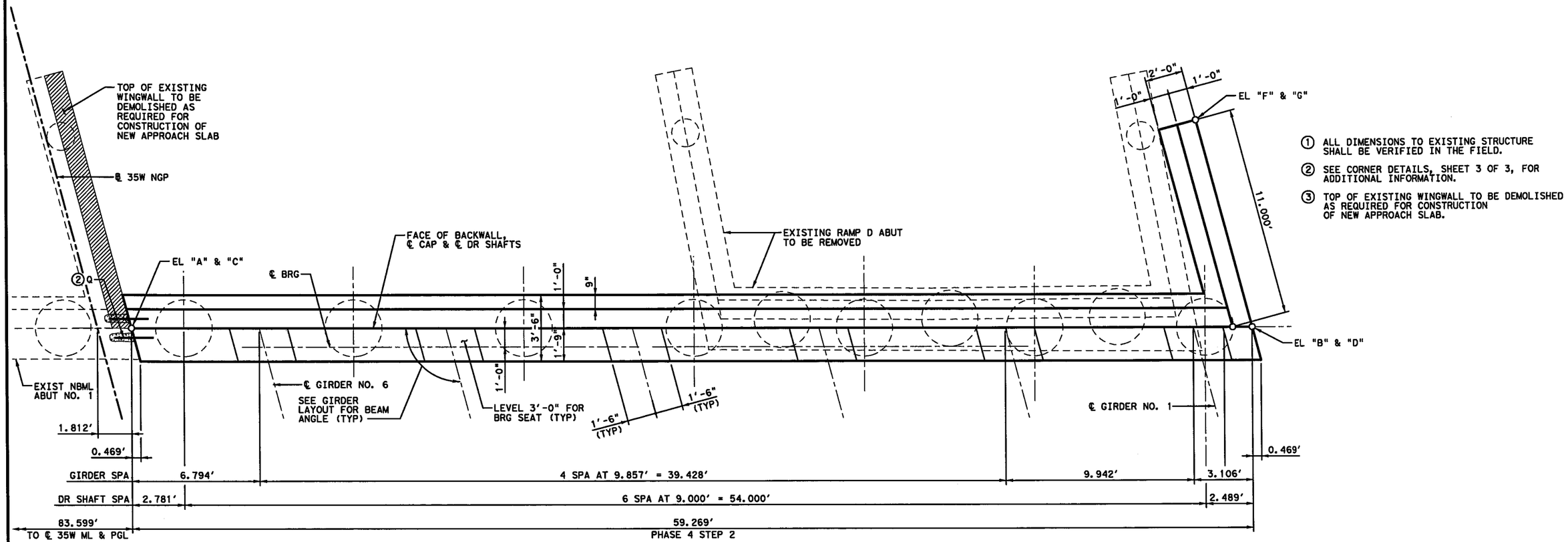

① ALL DIMENSIONS TO EXISTING STRUCTURE SHALL BE VERIFIED IN THE FIELD.

② SEE CORNER DETAILS, SHEET 3 OF 3, FOR ADDITIONAL INFORMATION.

③ TOP OF EXISTING WINGWALL TO BE DEMOLISHED AS REQUIRED FOR CONSTRUCTION OF NEW APPROACH SLAB.

PLAN
(PHASE 4 STEP 2) ①

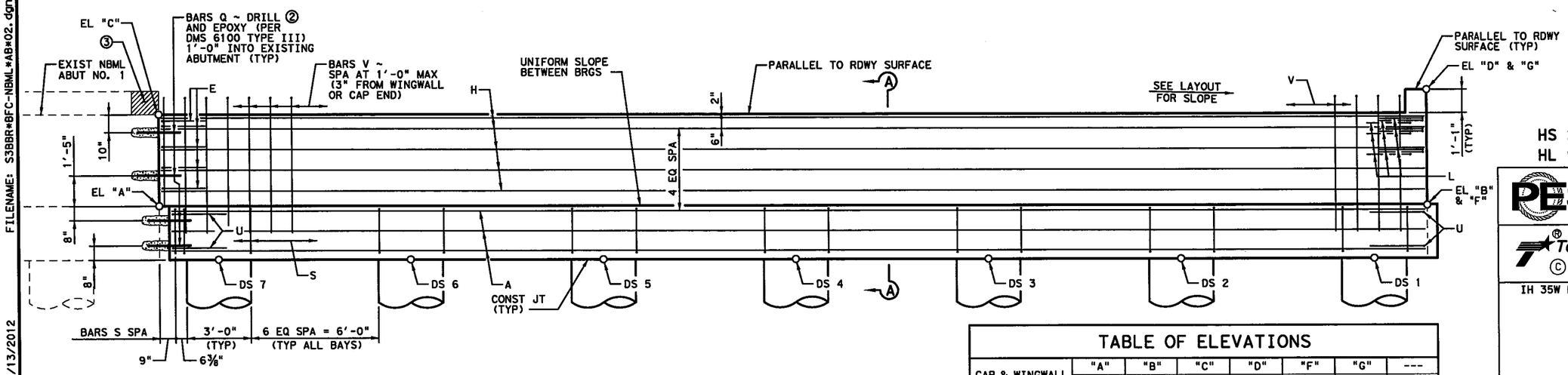

ELEVATION
(PHASE 4 STEP 2)

TABLE OF ELEVATIONS

CAP & WINGWALL	"A"	"B"	"C"	"D"	"F"	"G"	---
	619.059	617.895	623.014	622.934	617.698	622.738	---
TOP OF DS	DS 1	DS 2	DS 3	DS 4	DS 5	DS 6	DS 7
	615.444	615.620	615.797	615.974	616.150	616.327	616.503
SHAFT TIP	580.444	580.620	580.797	580.974	581.150	581.327	581.503
AS- BUILT SHAFT TIP							

STATE OF TEXAS
TIMOTHY J. ROSS
98465
LICENSED
PROFESSIONAL ENGINEER
7/6/12

HS 20 LOADING (EXISTING)
HL 93 LOADING (WIDENING)

PESC
P.E. Structural Consultants, Inc.
www.PEStructural.com
TBPE Firm No. F-1475

Texas Department of Transportation
© 2012

IH 35W FROM NORTH TARRANT PKWY TO IH 820

ABUTMENT NO. 1
NB IH 35W
OVER BIG FOSSIL CK

SCALE: NTS — SHEET 2 OF 3

DESIGN	FED.RD. DIV.NO.	FEDERAL AID PROJECT NO.		HIGHWAY NO.
TJR	6	(SEE TITLE SHEET)		IH 35W
GRAPHICS TLS	STATE	DISTRICT	COUNTY	SHEET NO.
CHECK NRR	TEXAS	FTW	TARRANT	1687
CHECK AB	CONTROL	SECTION	JOB	
	0014	16	255, ETC.	

FILENAME: S38BR*BFC-NBML*AB*02.dgn
DRAWING DATE: 7/13/2012

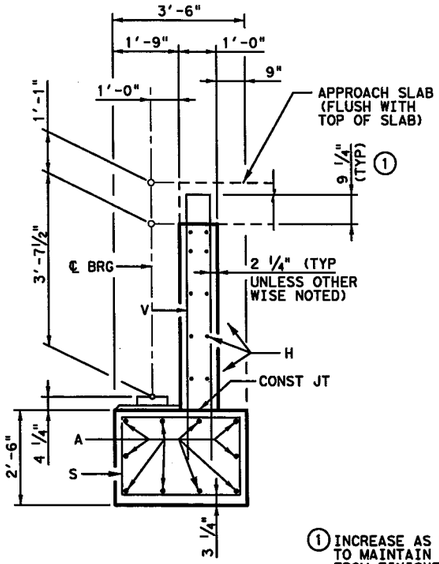

SECTION A-A

① INCREASE AS REQUIRED TO MAINTAIN 3 3/4" FROM FINISHED GRADE.

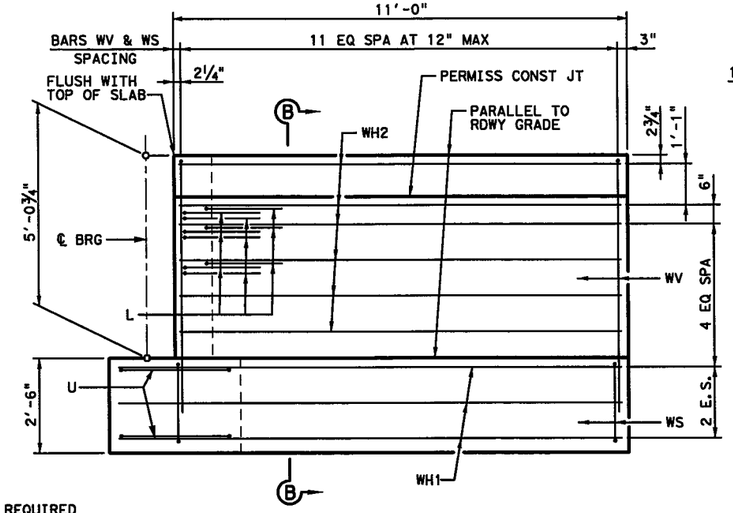

ELEVATION

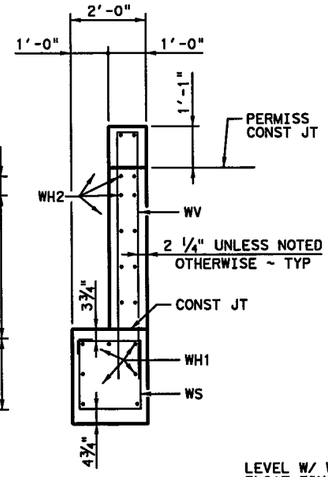

SECTION B-B

TABLE OF ESTIMATED QUANTITIES ~ PH 1 STEP 1

BAR	NO.	SIZE	LENGTH	WEIGHT
A	10	#11	25'-5"	1,350
H	10	#6	26'-1"	392
E	10	#6	4'-8"	70
E1	3	#4	5'-5"	11
E2	4	#4	4'-1"	11
Q	12	#5	2'-0"	25
S	22	#5	11'-4"	260
U	4	#6	8'-1"	49
V	27	#5	12'-8"	357
REINFORCING STEEL			LB	2,525
CL C CONC (HPC) (ABUT)			CY	12.6

TABLE OF ESTIMATED QUANTITIES ~ PH 4 STEP 2

BAR	NO.	SIZE	LENGTH	WEIGHT
A	10	#11	58'-3"	3,095
H	10	#6	58'-11"	885
E	5	#6	4'-8"	35
L	9	#6	4'-0"	54
Q	6	#5	2'-0"	13
S	45	#5	11'-4"	532
U	2	#6	8'-1"	24
V	59	#5	12'-8"	779
WH1	7	#6	12'-5"	131
WH2	12	#6	10'-8"	192
WS	12	#4	7'-8"	61
WV	12	#5	12'-11"	162
REINFORCING STEEL			LB	5,963
CL C CONC (HPC) (ABUT)			CY	31.7

WINGWALL DETAILS

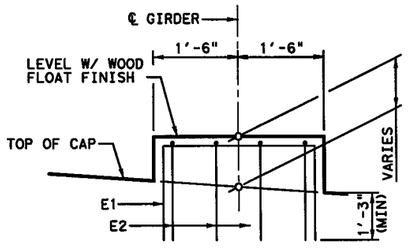

ELEVATION

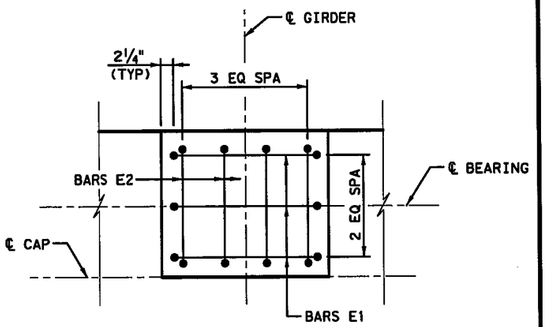

PLAN

BEARING SEAT DETAIL

(HEIGHTS OVER 3")

(BEARING SURFACE MUST BE CLEAN AND FREE OF ALL LOOSE MATERIAL BEFORE PLACING BEARING PAD.)

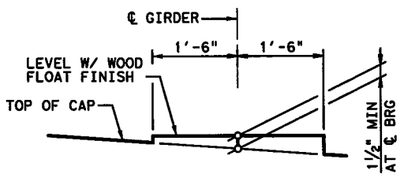

BEARING SEAT DETAIL

(HEIGHTS 3" OR LESS)

(BEARING SURFACE MUST BE CLEAN AND FREE OF ALL LOOSE MATERIAL BEFORE PLACING BEARING PAD.)

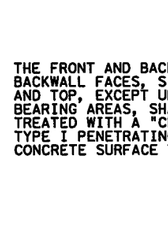

BACKWALL

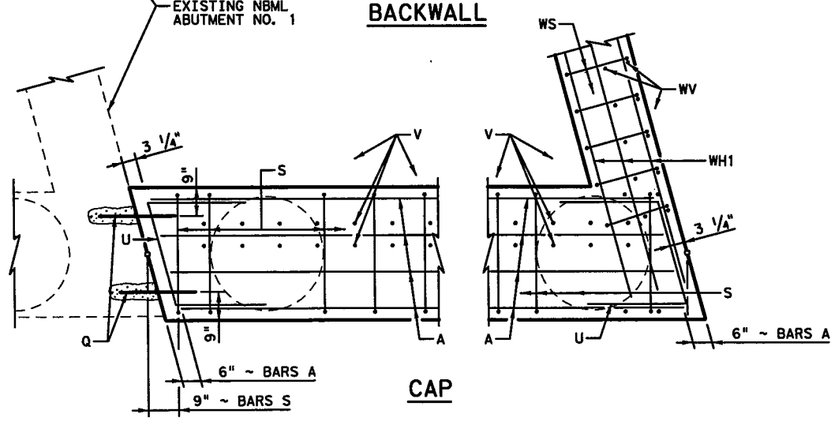

CAP

CORNER DETAILS

(PHASE 4 STEP 2 SHOWN, PHASE 1 STEP 2 SIMILAR)

THE FRONT AND BACK, BACKWALL FACES, SIDES, AND TOP, EXCEPT UNDER BEARING AREAS, SHALL BE TREATED WITH A "CLASS II, TYPE I PENETRATING CONCRETE SURFACE TREATMENT".

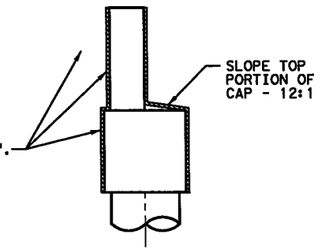

CONCRETE SURFACE TREATMENT DETAIL FOR ABUTMENT

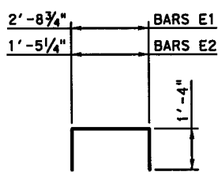

BARS E1 & E2

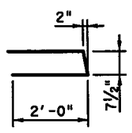

BARS E

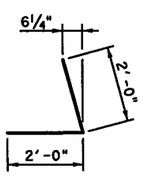

BARS L

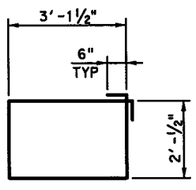

BARS S

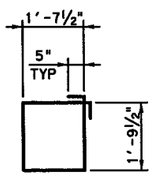

BARS WS

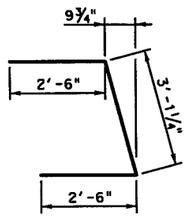

BARS U

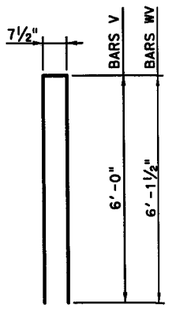

BARS V & WV

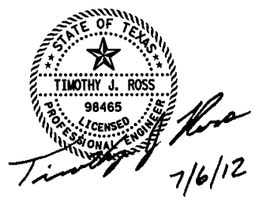

HS 20 LOADING (EXISTING)
HL 93 LOADING (WIDENING)

PESC P.E. Structural Consultants, Inc.
www.PEStructural.com
TBPE Firm No. F-1475

Texas Department of Transportation
© 2012

IH 35W FROM NORTH TARRANT PKWY TO IH 820

ABUTMENT NO. 1

NB IH 35W

OVER BIG FOSSIL CK

SCALE: NTS — SHEET 3 OF 3

DESIGN	FED. RD. DIV. NO.	FEDERAL AID PROJECT NO.		HIGHWAY NO.
TJR	6	(SEE TITLE SHEET)		IH 35W
GRAPHICS	STATE	DISTRICT	COUNTY	SHEET NO.
TLS	TEXAS	FTW	TARRANT	
CHECK	CONTROL	SECTION	JOB	1688
NRR	0014	16	255, ETC.	
CHECK				
AB				

DRAWING DATE: 7/13/2012 FILENAME: S3BBR*BFC-NBML*AB*03.dgn

① ALL DIMENSIONS TO EXISTING STRUCTURE SHALL BE VERIFIED IN THE FIELD.

② SEE CORNER DETAILS, SHEET 3 OF 3, FOR ADDITIONAL INFORMATION.

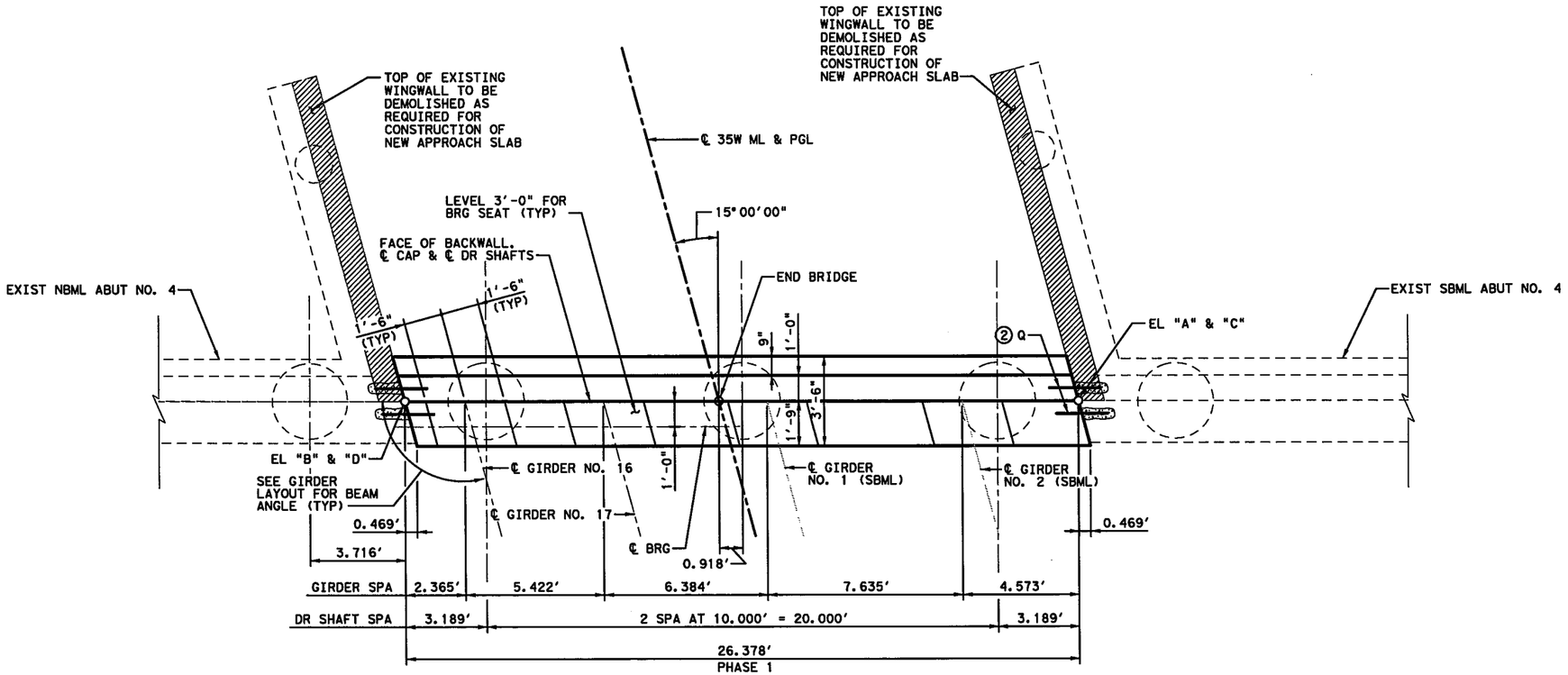

PLAN
(PHASE 1 STEP 1) ①

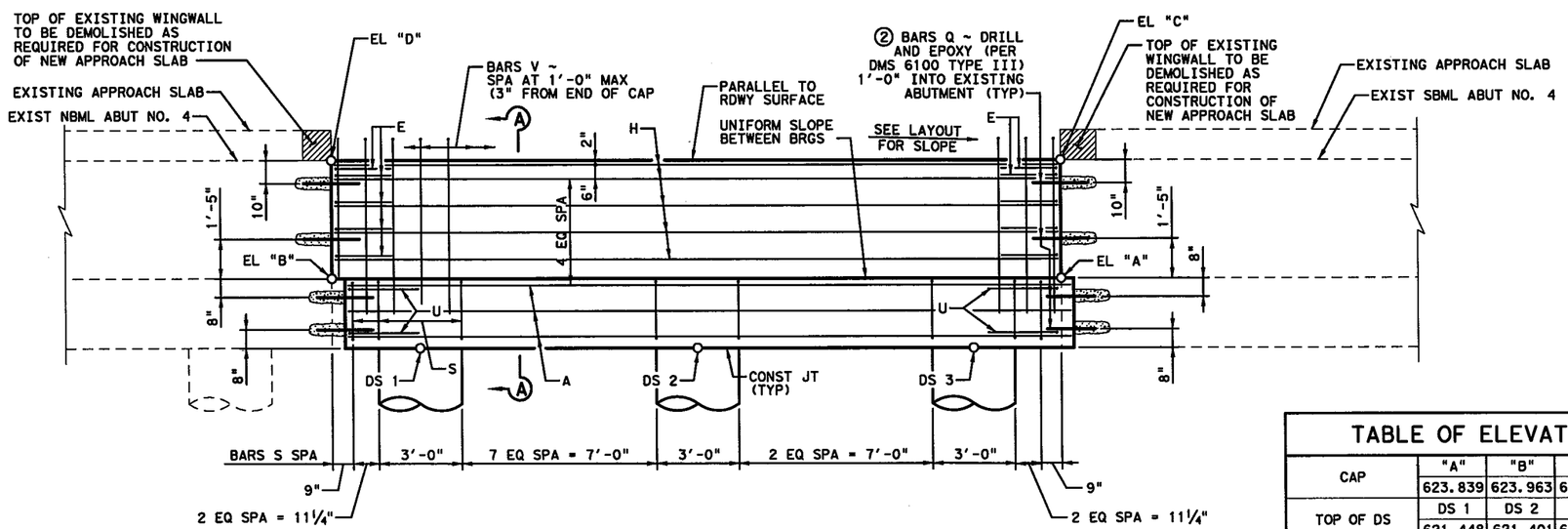

ELEVATION
(PHASE 1 STEP 1)

TABLE OF ELEVATIONS

CAP	"A"	"B"	"C"	"D"
	623.839	623.963	627.768	627.910
TOP OF DS	DS 1	DS 2	DS 3	---
	621.448	621.401	621.354	---
SHAFT TIP	572.448	572.401	572.354	---
AS- BUILT SHAFT TIP				---

STATE OF TEXAS
TIMOTHY J. ROSS
98465
LICENSED
PROFESSIONAL ENGINEER
7/6/12

HS 20 LOADING (EXISTING)
HL 93 LOADING (WIDENING)

PESC P.E. Structural Consultants, Inc.
www.PEStructural.com
TBPE Firm No. F-1475

Texas Department of Transportation
© 2012

IH 35W FROM NORTH TARRANT PKWY TO IH 820

ABUTMENT NO. 4

NB IH 35W

OVER BIG FOSSIL CK

SCALE: NTS — SHEET 1 OF 3

DESIGN	FED.RD. DIV.NO.	FEDERAL AID PROJECT NO.		HIGHWAY NO.
TJR	6	(SEE TITLE SHEET)		IH 35W
GRAPHICS TLS	STATE	DISTRICT	COUNTY	SHEET NO.
CHECK NRR	TEXAS	FTW	TARRANT	1689
CHECK AB	CONTROL	SECTION	JOB	
	0014	16	255, ETC.	

FILENAME: S3BBR*BFC-NBML*AB*04.dgn

DRAWING DATE: 7/13/2012

GENERAL NOTES:

1. DESIGNED ACCORDING TO AASHTO LRFD BRIDGE DESIGN SPECIFICATIONS, 5TH EDITION (2010).
2. CLASS "C" (HPC) CONCRETE STRENGTH F'C = 3,600 PSI.
3. ALL CAP AND WALL REINFORCING SHALL BE GRADE 60.
4. SEE FD STANDARD FOR ALL FOUNDATION DETAILS AND NOTES.
5. SEE RAIL STANDARD FOR RAIL ANCHORAGE IN WINGWALLS.
6. CALCULATED FOUNDATION LOADS:
   CAP DRILLED SHAFTS = PHASE 1: 85 TONS / D.S.
   CAP DRILLED SHAFTS = PHASE 3: 70 TONS / D.S.

① ALL DIMENSIONS TO EXISTING STRUCTURE SHALL BE VERIFIED IN THE FIELD.

② SEE CORNER DETAILS, SHEET 3 OF 3, FOR ADDITIONAL INFORMATION.

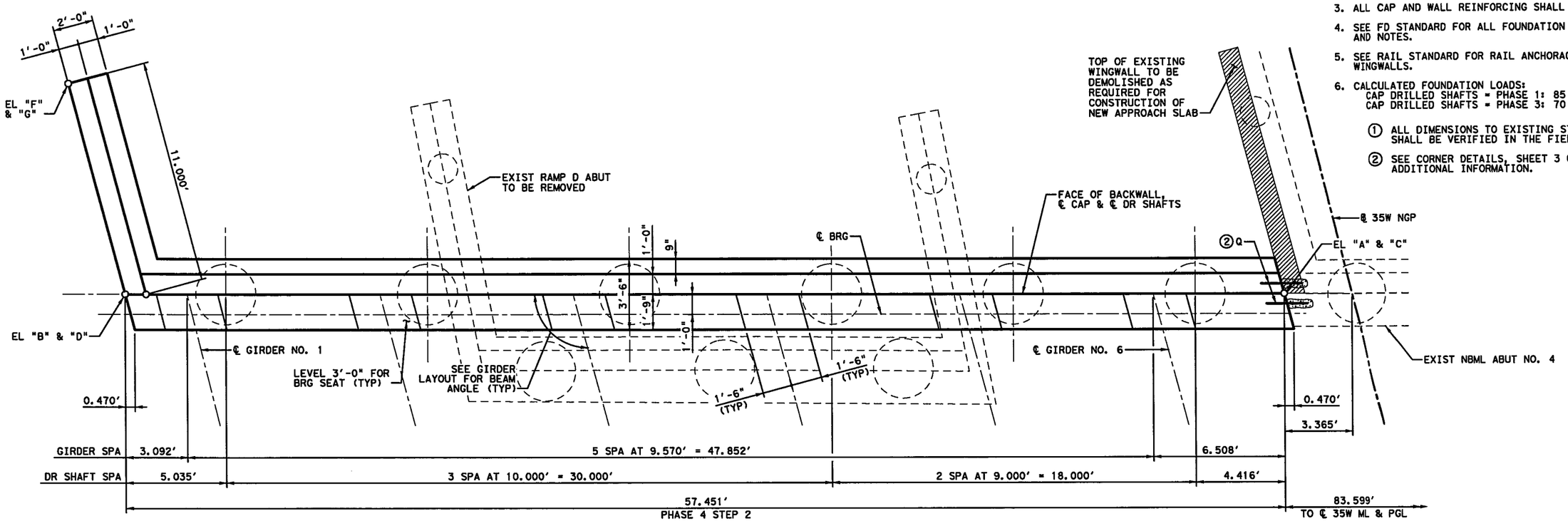

PLAN
(PHASE 4 STEP 2) ①

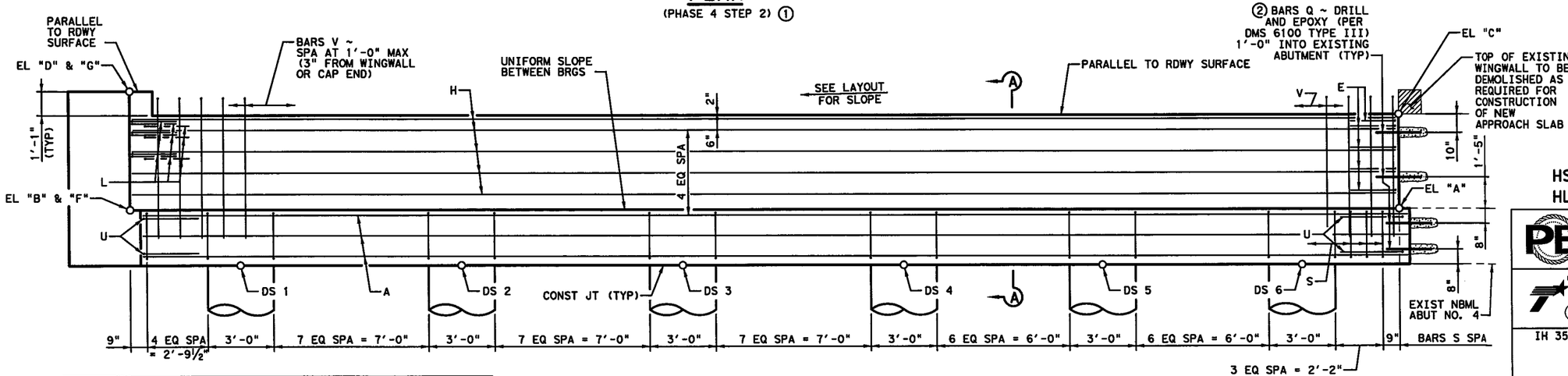

ELEVATION
(PHASE 4 STEP 2)

TABLE OF ELEVATIONS						
CAP & WINGWALL	"A"	"B"	"C"	"D"	"F"	"G"
	622.638	621.465	626.637	626.548	621.614	626.697
TOP OF DS	DS 1	DS 2	DS 3	DS 4	DS 5	DS 6
	619.067	619.271	619.476	619.680	619.864	620.048
SHAFT TIP	581.067	581.271	583.067	581.680	581.864	582.048
AS- BUILT SHAFT TIP						

STATE OF TEXAS
TIMOTHY J. ROSS
98465
LICENSED PROFESSIONAL ENGINEER
7/6/12

HS 20 LOADING (EXISTING)
HL 93 LOADING (WIDENING)

PESC P.E. Structural Consultants, Inc.
www.PEStructural.com
TBPE Firm No. F-1475

Texas Department of Transportation
© 2012

IH 35W FROM NORTH TARRANT PKWY TO IH 820

ABUTMENT NO. 4

NB IH 35W

OVER BIG FOSSIL CK

SCALE: NTS — SHEET 2 OF 3

DESIGN	FED. RD. DIV. NO.	FEDERAL AID PROJECT NO.		HIGHWAY NO.
TJR	6	(SEE TITLE SHEET)		IH 35W
GRAPHICS	STATE	DISTRICT	COUNTY	SHEET NO.
TLS	TEXAS	FTW	TARRANT	1690
CHECK	CONTROL	SECTION	JOB	
NRR	0014	16	255, ETC.	
CHECK				
AB				

FILENAME: S3BBR*BFC-NBML*AB*05.dgn
DRAWING DATE: 7/13/2012

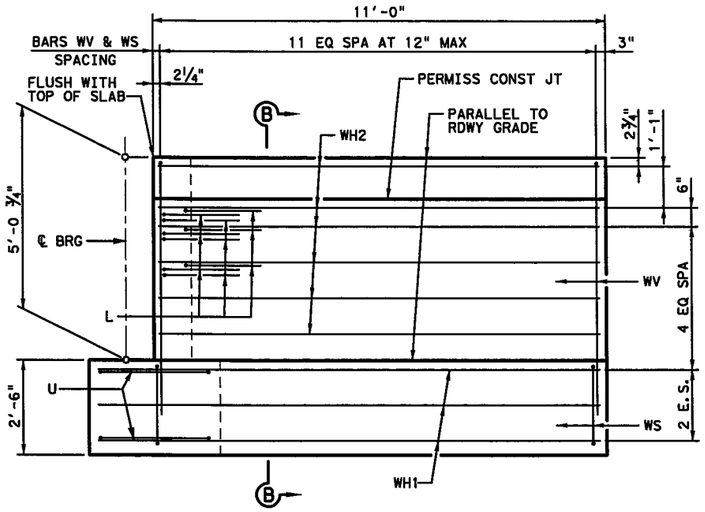

ELEVATION

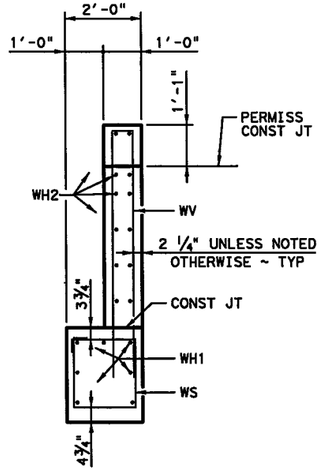

SECTION B-B

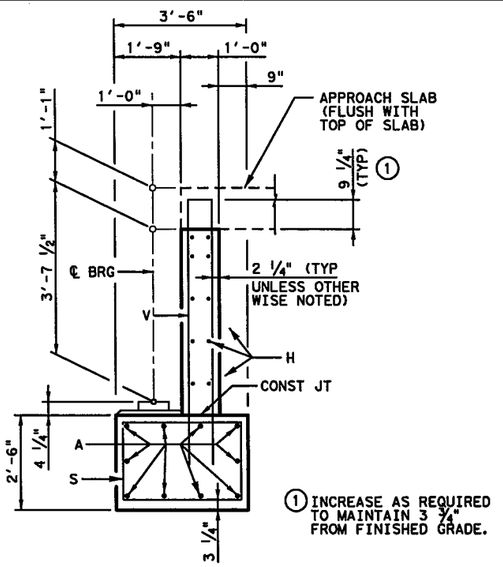

① INCREASE AS REQUIRED TO MAINTAIN 3 ¾" FROM FINISHED GRADE.

SECTION A-A

TABLE OF ESTIMATED QUANTITIES ~ PH 1 STEP 1

BAR	NO.	SIZE	LENGTH	WEIGHT
A	10	#11	25'-5"	1,350
H	10	#6	26'-1"	392
E	10	#6	4'-8"	70
E1	3	#4	5'-5"	11
E2	4	#4	4'-1"	11
Q	12	#5	2'-0"	25
S	22	#5	11'-4"	260
U	4	#6	8'-1"	49
V	27	#5	12'-8"	357
REINFORCING STEEL			LB	2,525
CL C CONC (HPC) (ABUT)			CY	12.6

TABLE OF ESTIMATED QUANTITIES ~ PH 4 STEP 2

BAR	NO.	SIZE	LENGTH	WEIGHT
A	10	#11	56'-5"	2,997
H	10	#6	57'-1"	857
E	5	#6	4'-8"	35
L	9	#6	4'-0"	54
Q	6	#5	2'-0"	13
S	47	#5	11'-4"	556
U	2	#6	8'-1"	24
V	57	#5	12'-8"	753
WH1	7	#6	12'-5"	131
WH2	12	#6	10'-8"	192
WS	12	#4	7'-8"	61
WV	12	#5	12'-11"	162
REINFORCING STEEL			LB	5,835
CL C CONC (HPC) (ABUT)			CY	30.9

WINGWALL DETAILS

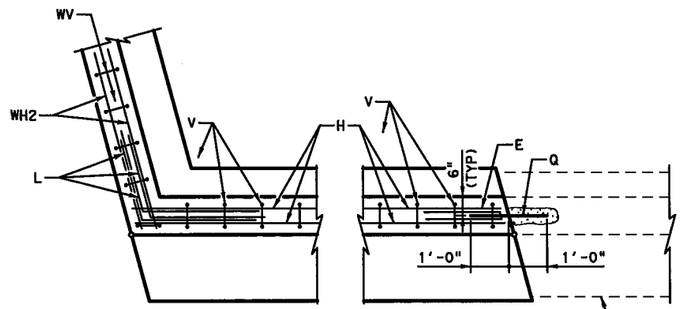

BACKWALL

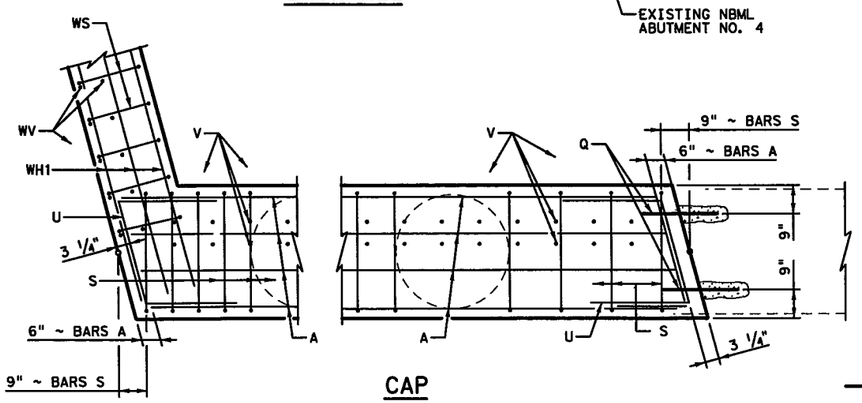

CAP

CORNER DETAILS

(PHASE 4 STEP 2 SHOWN, PHASE 1 STEP 1 SIMILAR)

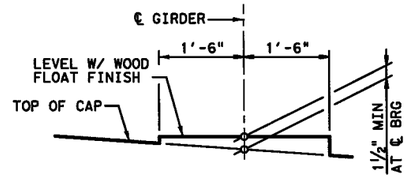

BEARING SEAT DETAIL

(HEIGHTS 3" OR LESS)

(BEARING SURFACE MUST BE CLEAN AND FREE OF ALL LOOSE MATERIAL BEFORE PLACING BEARING PAD.)

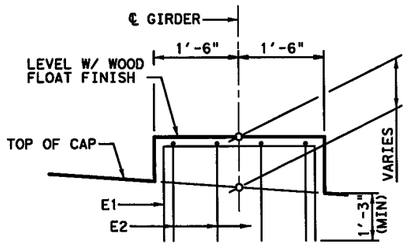

ELEVATION

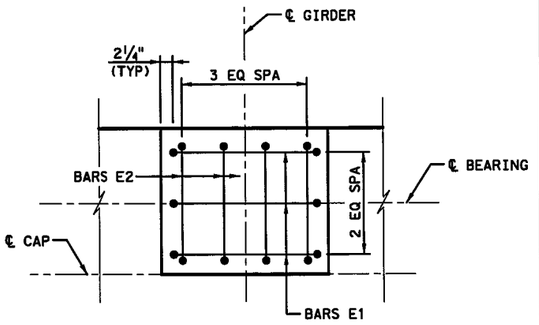

PLAN

BEARING SEAT DETAIL

(HEIGHTS OVER 3")

(BEARING SURFACE MUST BE CLEAN AND FREE OF ALL LOOSE MATERIAL BEFORE PLACING BEARING PAD.)

THE FRONT AND BACK, BACKWALL FACES, SIDES, AND TOP, EXCEPT UNDER BEARING AREAS, SHALL BE TREATED WITH A "CLASS II, TYPE I PENETRATING CONCRETE SURFACE TREATMENT".

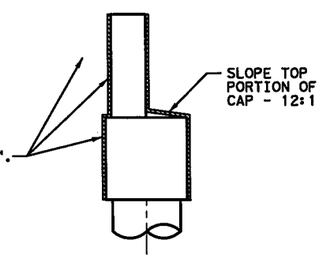

CONCRETE SURFACE TREATMENT DETAIL FOR ABUTMENT

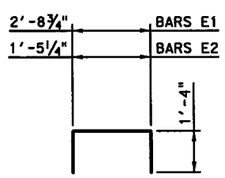

BARS E1 & E2

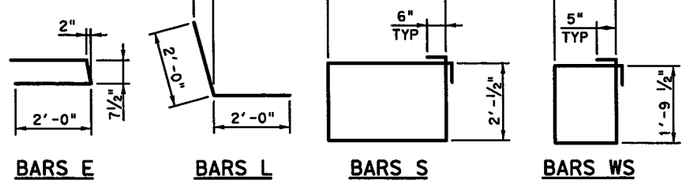

BARS E BARS L BARS S BARS WS

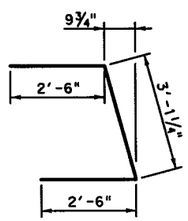

BARS U

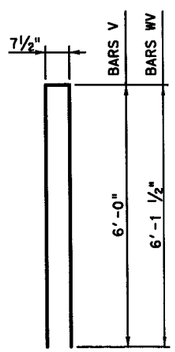

BARS V & WV

HS 20 LOADING (EXISTING)
HL 93 LOADING (WIDENING)

PESC P.E. Structural Consultants, Inc.
www.PEStructural.com
TBPE Firm No. F-1475

Texas Department of Transportation
© 2012

IH 35W FROM NORTH TARRANT PKWY TO IH 820

ABUTMENT NO. 4

NB IH 35W

OVER BIG FOSSIL CK

SCALE: NTS — SHEET 3 OF 3

DESIGN	FED.RD. DIV. NO.	FEDERAL AID PROJECT NO.		HIGHWAY NO.
TJR	6	(SEE TITLE SHEET)		IH 35W
GRAPHICS TLS	STATE	DISTRICT	COUNTY	SHEET NO.
CHECK NRR	TEXAS	FTW	TARRANT	1691
CHECK AB	CONTROL 0014	SECTION 16	JOB 255, ETC.	

STATE OF TEXAS — TIMOTHY J. ROSS — 98465 — LICENSED PROFESSIONAL ENGINEER

7/6/12

FILENAME: S3BBR*BFC-NBML*AB*06.dgn

DRAWING DATE: 7/13/2012

TABLE OF ESTIMATED QUANTITIES ~ BENT 2 PHASE 4 STEP 2 ③

BENT	COLUMN HEIGHT "H"	BAR V 40 - #9		BAR Z 4 - #3 SPIRAL		TOTAL REINFORCING STEEL	CL C CONC (COLUMN) (HPC) (4 COLS)
NO.	(FT)	LENGTH	WEIGHT (LB)	LENGTH	WEIGHT (LB)	WEIGHT (LB)	(CY)
2	24	26' - 3"	3,570	393' - 6"	592	4,162	25.2

TOTAL ESTIMATED QUANTITIES ~ BENT 2 PHASE 4 STEP 2 ②④

TABLE OF ESTIMATED QUANTITIES ~ BENT 2 PHASE 4 STEP 2

BAR	NO.	SIZE	LENGTH	WEIGHT
A	5	#11	55'-0"	1,461
B	5	#11	53'-6"	1,421
D	4	1 1/4" D	1'-8"	28
S	52	#5	13'-6"	732
T	10	#5	53'-6"	558
U	2	#5	9'-8"	20
REINFORCING STEEL			LB	4,220
CL C CONC (HPC) (CAP)			CY	25.2

② QUANTITIES SHOWN ARE FOR ONE BENT ONLY.

③ ADJUST BARS V LENGTH BY 1 FT AND BARS Z LENGTH BY 15.7398 FT FOR EACH LINEAR FOOT OF VARIATION IN "H" VALUE.

④ ADJUST REINFORCING STEEL TOTAL BY 160 LBS AND CLASS "C" CONCRETE TOTAL BY 1.0472 CY FOR EACH LINEAR FOOT OF VARIATION IN "H" VALUE.

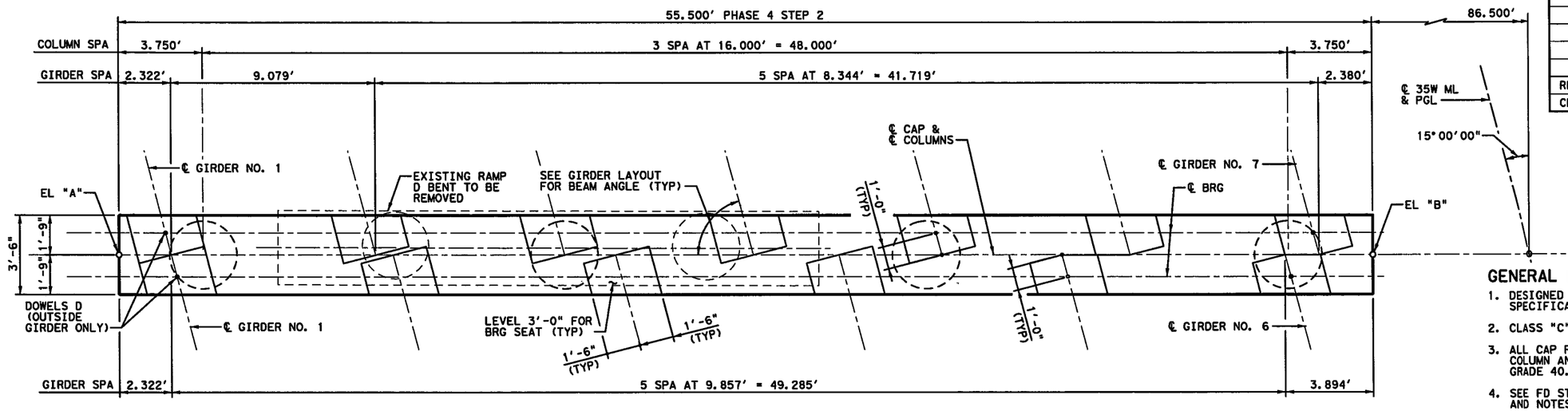

PLAN

(BENT NO. 2 - PHASE 4 STEP 2)

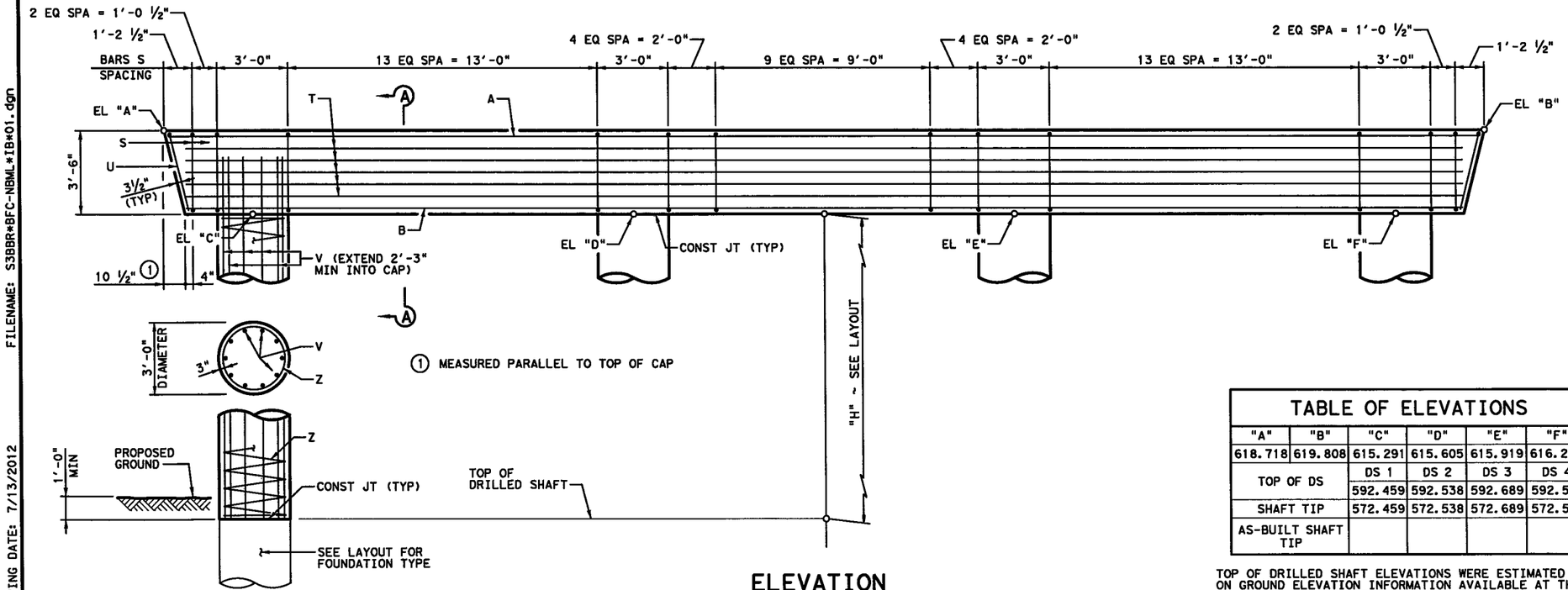

ELEVATION

(BENT NO. 2 - PHASE 4 STEP 2)

TABLE OF ELEVATIONS

"A"	"B"	"C"	"D"	"E"	"F"
618.718	619.808	615.291	615.605	615.919	616.233
TOP OF DS		DS 1	DS 2	DS 3	DS 4
		592.459	592.538	592.689	592.571
SHAFT TIP		572.459	572.538	572.689	572.571
AS-BUILT SHAFT TIP					

TOP OF DRILLED SHAFT ELEVATIONS WERE ESTIMATED BASED ON GROUND ELEVATION INFORMATION AVAILABLE AT THE TIME OF DESIGN. CONTRACTOR SHALL CONFIRM THESE ELEVATIONS PRIOR TO DRILLING.

GENERAL NOTES:

1. DESIGNED ACCORDING TO AASHTO LRFD BRIDGE DESIGN SPECIFICATIONS, 5TH EDITION (2010).
2. CLASS "C" (HPC) CONCRETE STRENGTH F'C = 3,600 PSI.
3. ALL CAP REINFORCING SHALL BE GRADE 60. COLUMN AND DRILLED SHAFT REINFORCING MAY BE GRADE 40.
4. SEE FD STANDARD FOR ALL FOUNDATION DETAILS AND NOTES.
5. CALCULATED FOUNDATION LOADS:
   BENT 2, PHASE 1 = 230 TONS / D.S.
   BENT 2, PHASE 3 = 180 TONS / D.S.
   BENT 3, PHASE 1 = 245 TONS / D.S.
   BENT 3, PHASE 3 = 165 TONS / D.S.

STATE OF TEXAS
TIMOTHY J. ROSS
98465
LICENSED
PROFESSIONAL ENGINEER
7/6/12

HS 20 LOADING (EXISTING)
HL 93 LOADING (WIDENING)

PESC P.E. Structural Consultants, Inc.
www.PEStructural.com
TBPE Firm No. F-1475

Texas Department of Transportation
© 2012

IH 35W FROM NORTH TARRANT PKWY TO IH 820

INTERIOR BENT NO. 2 & 3
NB IH 35W
OVER BIG FOSSIL CK

SCALE: NTS

SHEET 1 OF 3

DESIGN	FED. RD. DIV. NO.	FEDERAL AID PROJECT NO.		HIGHWAY NO.
TJR	6	(SEE TITLE SHEET)		IH 35W
GRAPHICS TLS	STATE	DISTRICT	COUNTY	SHEET NO.
CHECK NRR	TEXAS	FTW	TARRANT	1692
CHECK AB	CONTROL	SECTION	JOB	
	0014	16	255, ETC.	

FILENAME: S3BBR*BFC-NBML*IB*01.dgn

DRAWING DATE: 7/13/2012

TABLE OF ESTIMATED QUANTITIES ~ BENT 3 PHASE 4 STEP 2 ③

BENT	COLUMN HEIGHT "H"	BAR V 50 - #9		BAR Z 5 - #3 SPIRAL		TOTAL REINFORCING STEEL	CL C CONC (COLUMN) (HPC) (5 COLS)
NO.	(FT)	LENGTH	WEIGHT (LB)	LENGTH	WEIGHT (LB)	WEIGHT (LB)	(CY)
3	27	29' - 3"	4,973	440' - 8"	828	5,801	35.5

TOTAL ESTIMATED QUANTITIES ~ BENT 3 PHASE 4 STEP 2 ②④

TABLE OF ESTIMATED ② QUANTITIES ~ BENT 3 PHASE 4 STEP 2

BAR	NO.	SIZE	LENGTH	WEIGHT
A	5	#11	54'-0"	1,435
B	5	#11	52'-6"	1,395
D	4	1 1/4" D	1'-8"	28
E1	18	#4	5'-10" AVG	70
E2	24	#4	4'-7" AVG	73
S	58	#5	13'-6"	817
T	10	#5	52'-6"	548
U	2	#5	9'-8"	20
REINFORCING STEEL			LB	4,386
CL C CONC (HPC) (CAP)			CY	24.9

② QUANTITIES SHOWN ARE FOR ONE BENT ONLY.

③ ADJUST BARS V LENGTH BY 1 FT AND BARS Z LENGTH BY 15.7398 FT FOR EACH LINEAR FOOT OF VARIATION IN "H" VALUE.

④ ADJUST REINFORCING STEEL TOTAL BY 200 LBS AND CLASS "C" CONCRETE TOTAL BY 1.3090 CY FOR EACH LINEAR FOOT OF VARIATION IN "H" VALUE.

⑤ BENT 3 ONLY.

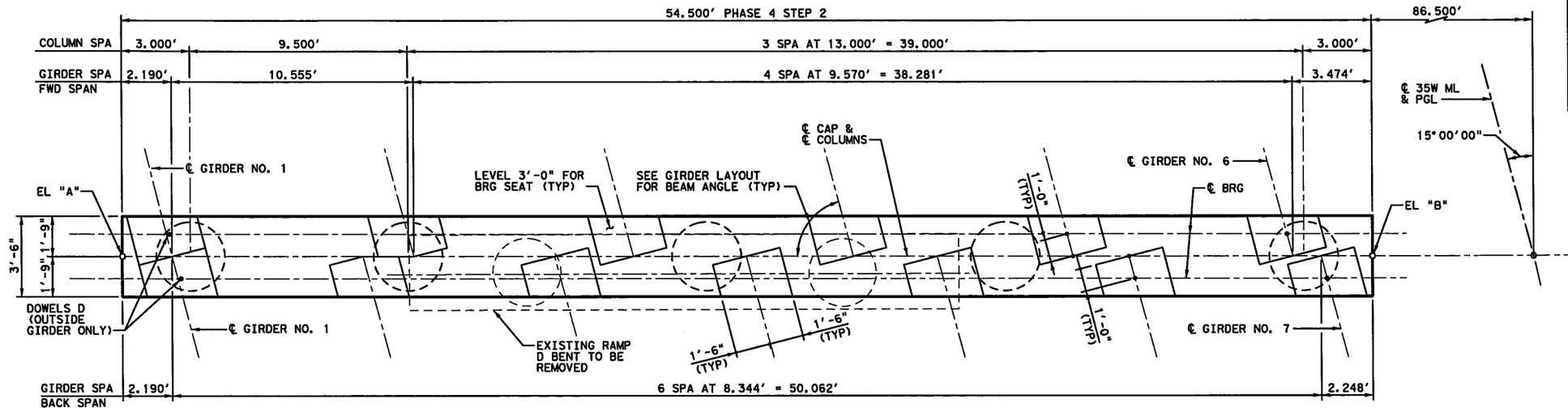

PLAN

(BENT NO. 3 - PHASE 4 STEP 2)

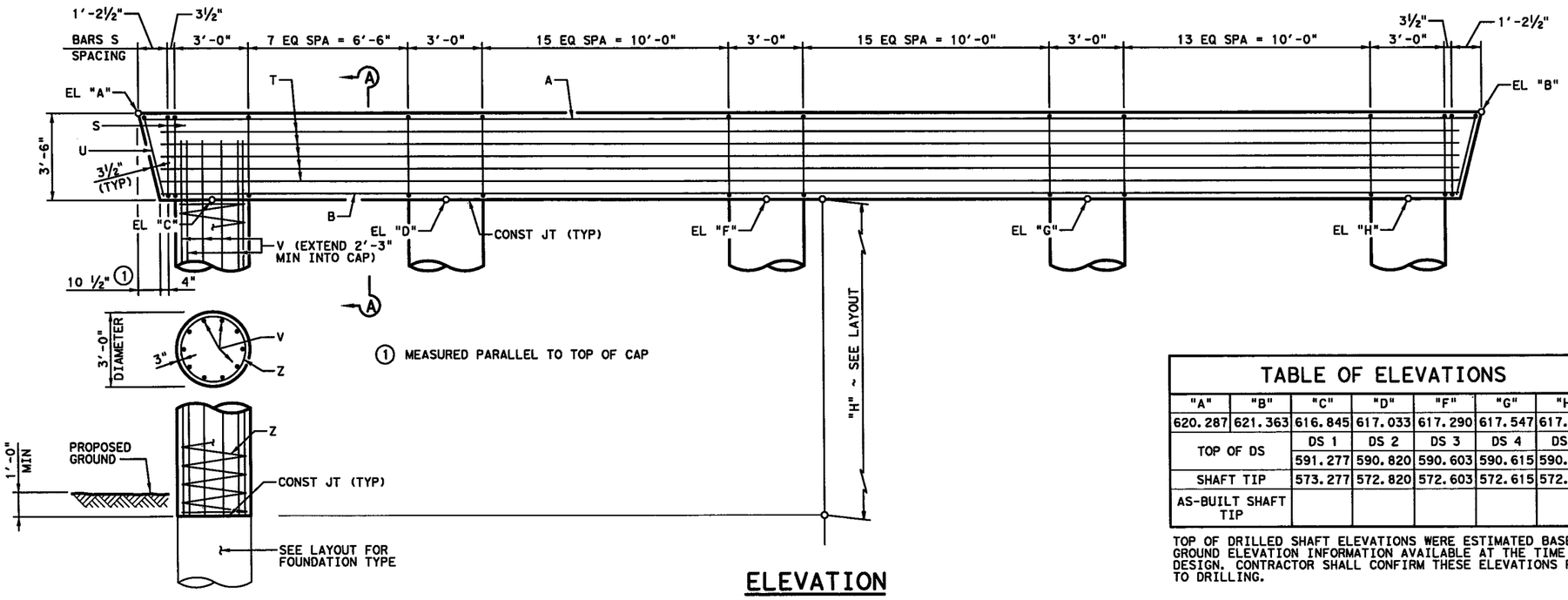

ELEVATION

(BENT NO. 3 - PHASE 4 STEP 2)

TABLE OF ELEVATIONS

"A"	"B"	"C"	"D"	"F"	"G"	"H"
620.287	621.363	616.845	617.033	617.290	617.547	617.803
TOP OF DS		DS 1	DS 2	DS 3	DS 4	DS 5
		591.277	590.820	590.603	590.615	590.676
SHAFT TIP		573.277	572.820	572.603	572.615	572.676
AS-BUILT SHAFT TIP						

TOP OF DRILLED SHAFT ELEVATIONS WERE ESTIMATED BASED ON GROUND ELEVATION INFORMATION AVAILABLE AT THE TIME OF DESIGN. CONTRACTOR SHALL CONFIRM THESE ELEVATIONS PRIOR TO DRILLING.

STATE OF TEXAS
TIMOTHY J. ROSS
98465
LICENSED PROFESSIONAL ENGINEER
7/6/12

HS 20 LOADING (EXISTING)
HL 93 LOADING (WIDENING)

PESC P.E. Structural Consultants, Inc.
www.PEStructural.com
TBPE Firm No. F-1475

Texas Department of Transportation
© 2012

IH 35W FROM NORTH TARRANT PKWY TO IH 820

INTERIOR BENT NO. 2 & 3

NB IH 35W

OVER BIG FOSSIL CK

SCALE: NTS — SHEET 2 OF 3

DESIGN	FED.RD. DIV.NO.	FEDERAL AID PROJECT NO.		HIGHWAY NO.
TJR	6	(SEE TITLE SHEET)		IH 35W
GRAPHICS TLS	STATE	DISTRICT	COUNTY	SHEET NO.
CHECK NRR	TEXAS	FTW	TARRANT	1693
CHECK AB	CONTROL	SECTION	JOB	
	0014	16	255, ETC.	

FILENAME: S3BBR*BFC-NBML*IB*02.dgn

DRAWING DATE: 7/13/2012

TABLE OF ELEVS ~ BENT 2			
"A"	"B"	"C"	"D"
621.134	621.008	617.613	617.529
TOP OF DS		DS 1	DS 2
		593.395	593.523
SHAFT TIP		572.395	572.523
AS-BUILT SHAFT TIP			

TABLE OF ELEVS ~ BENT 3			
"A"	"B"	"C"	"D"
622.704	622.580	619.183	619.100
TOP OF DS		DS 1	DS 2
		590.679	590.760
SHAFT TIP		572.679	572.760
AS-BUILT SHAFT TIP			

TOP OF DRILLED SHAFT ELEVATIONS WERE ESTIMATED BASED ON GROUND ELEVATION INFORMATION AVAILABLE AT THE TIME OF DESIGN. CONTRACTOR SHALL CONFIRM THESE ELEVATIONS PRIOR TO DRILLING.

TABLE OF ESTIMATED QUANTITIES ~ PHASE 1 STEP 1 ③

BENT	COLUMN HEIGHT "H"	BAR V 20 - #9		BAR Z 2 - #3 SPIRAL		TOTAL REINFORCING STEEL	CL C CONC (COLUMN) (HPC) (2 COLS)
NO.	(FT)	LENGTH	WEIGHT (LB)	LENGTH	WEIGHT (LB)	WEIGHT (LB)	(CY)
2	25	27' - 3"	1,853	409' - 2"	308	2,161	13.0
3	29	31' - 3"	2,125	472' - 2"	355	2,480	15.2

TOTAL ESTIMATED QUANTITIES ~ PHASE 1 STEP 1 ②④

TABLE OF ESTIMATED ② QUANTITIES ~ PH 1 STEP 1				
BAR	NO.	SIZE	LENGTH	WEIGHT
A	4	#11	23'-6"	499
B	6	#11	22'-0"	701
D	4	1 1/4" D	1'-8"	28
E1	15	#4	5'-10" AVG	58
E2	20	#4	4'-7" AVG	61
S	25	#5	13'-6"	352
T	10	#5	22'-0"	229
U	2	#5	9'-8"	20
REINFORCING STEEL			LB	1,948
CL C CONC (HPC) (CAP)			CY	10.9

② QUANTITIES SHOWN ARE FOR ONE BENT ONLY.

③ ADJUST BARS V LENGTH BY 1 FT AND BARS Z LENGTH BY 15.7398 FT FOR EACH LINEAR FOOT OF VARIATION IN "H" VALUE.

④ ADJUST REINFORCING STEEL TOTAL BY 80 LBS AND CLASS "C" CONCRETE TOTAL BY 0.5236 CY FOR EACH LINEAR FOOT OF VARIATION IN "H" VALUE.

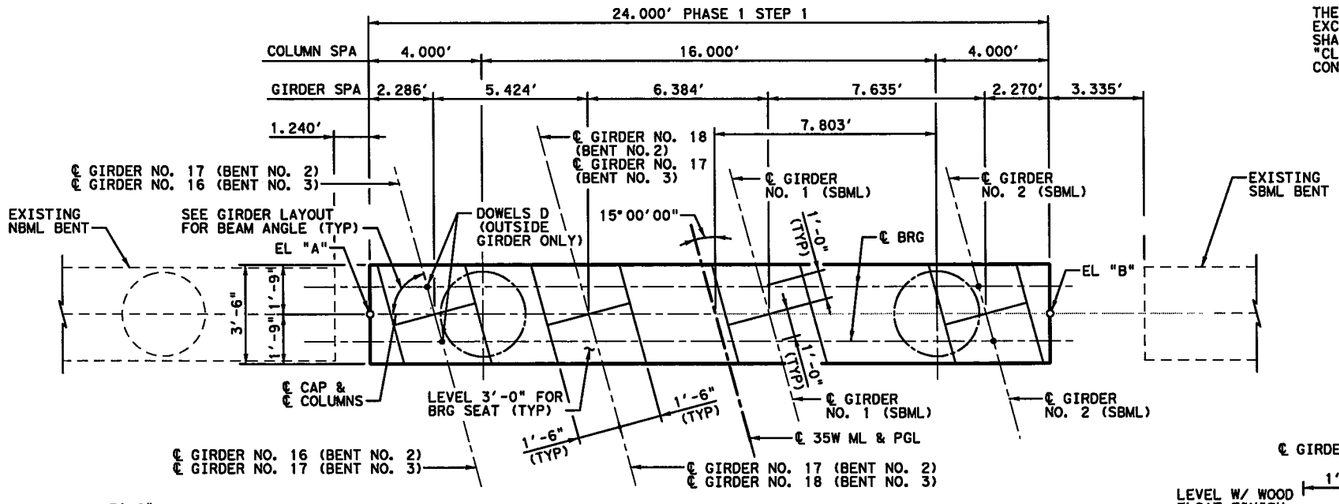

PLAN

(BENTS NO. 2 & NO. 3 PHASE 1 STEP 1)

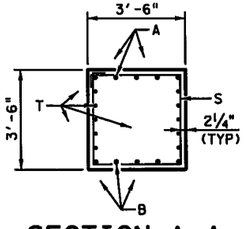

SECTION A-A

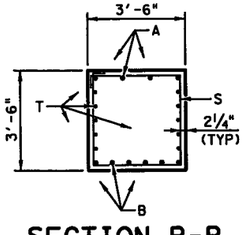

SECTION B-B

① MEASURED PARALLEL TO TOP OF CAP

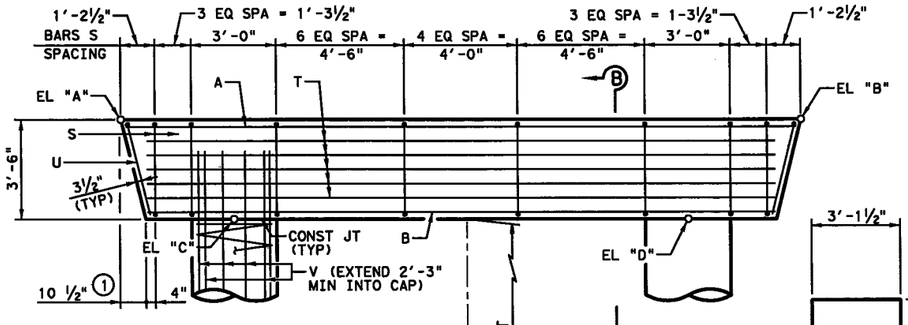

ELEVATION

(BENTS NO. 2 & NO. 3 PHASE 1 STEP 1)

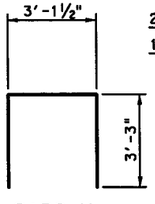

BARS U

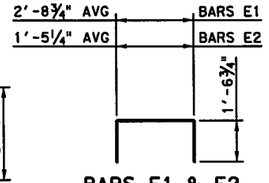

BARS E1 & E2

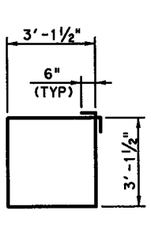

BARS S

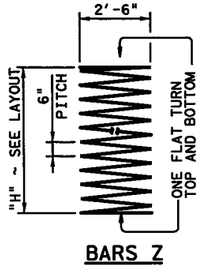

BARS Z

THE TOP, SIDES, AND ENDS, EXCEPT UNDER BEARING AREAS, SHALL BE TREATED WITH A "CLASS II, TYPE I PENETRATING CONCRETE SURFACE TREATMENT"

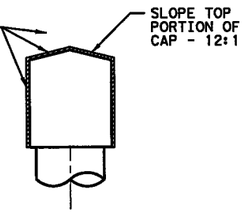

CONCRETE SURFACE TREATMENT DETAIL FOR INTERIOR BENT

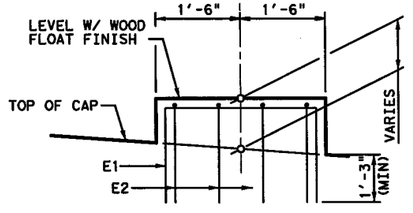

ELEVATION

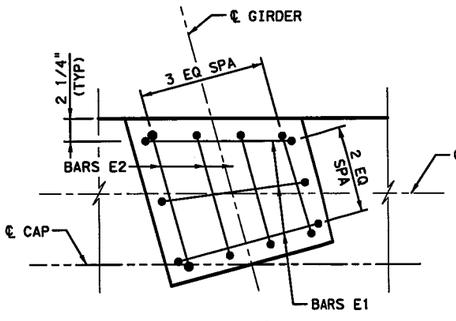

PLAN

BEARING SEAT DETAIL

(HEIGHTS OVER 3")

(BEARING SURFACE MUST BE CLEAN AND FREE OF ALL LOOSE MATERIAL BEFORE PLACING BEARING PAD.)

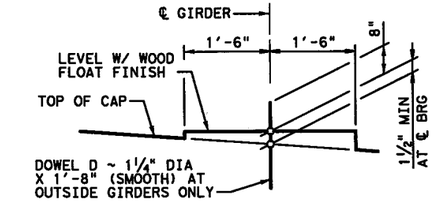

BEARING SEAT DETAIL

(HEIGHTS 3" OR LESS)

(BEARING SURFACE MUST BE CLEAN AND FREE OF ALL LOOSE MATERIAL BEFORE PLACING BEARING PAD.)

STATE OF TEXAS
TIMOTHY J. ROSS
98465
LICENSED PROFESSIONAL ENGINEER
7/6/12

HS 20 LOADING (EXISTING)
HL 93 LOADING (WIDENING)

PESC P.E. Structural Consultants, Inc. www.PEStructural.com TBPE Firm No. F-1475

Texas Department of Transportation

© 2012

IH 35W FROM NORTH TARRANT PKWY TO IH 820

INTERIOR BENT NO. 2 & 3

NB IH 35W

OVER BIG FOSSIL CK

SCALE: NTS SHEET 3 OF 3

DESIGN	FED.RD. DIV.NO.	FEDERAL AID PROJECT NO.		HIGHWAY NO.
TJR	6	(SEE TITLE SHEET)		IH 35W
GRAPHICS TLS	STATE	DISTRICT	COUNTY	SHEET NO.
CHECK NRR	TEXAS	FTW	TARRANT	1694
CHECK AB	CONTROL	SECTION	JOB	
	0014	16	255, ETC.	

FILENAME: S3BBR#BFC-NBML#IB#03.dgn

DRAWING DATE: 7/13/2012

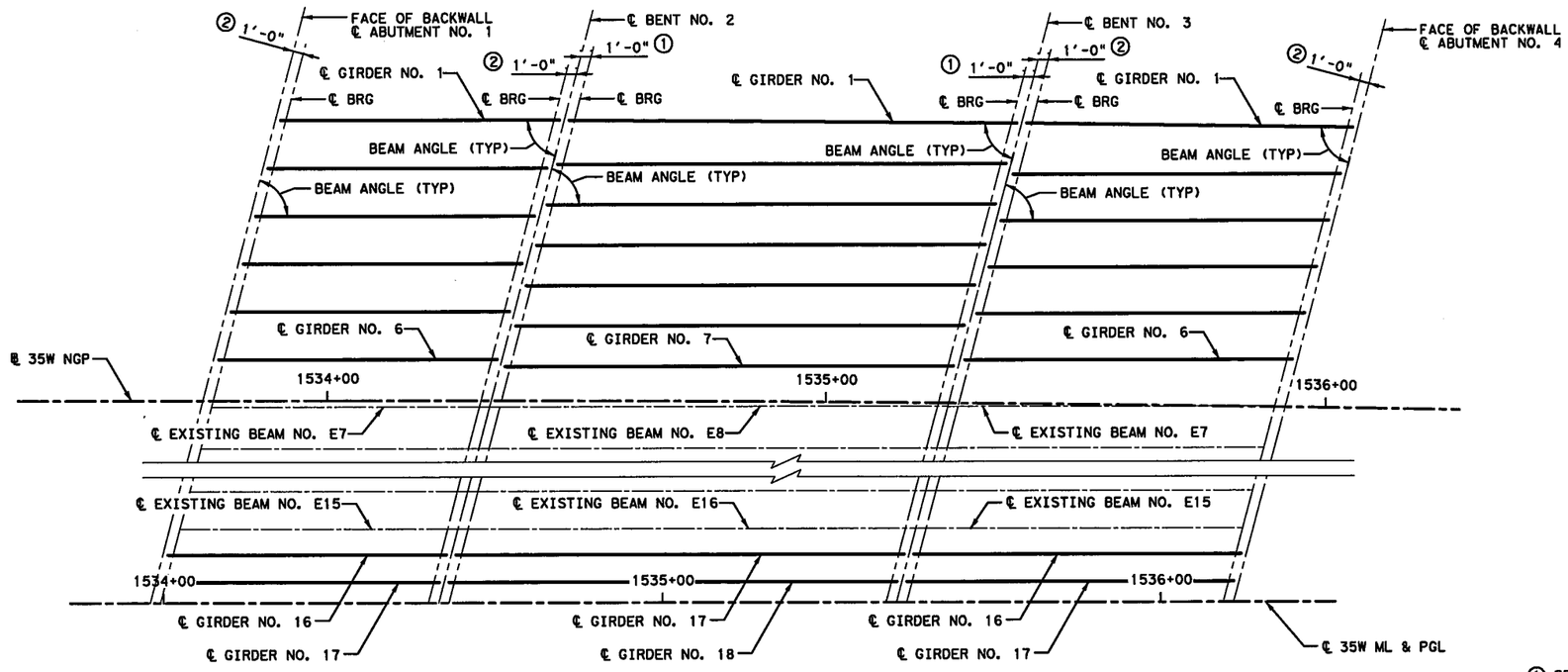

SPAN 1
(TX46 GIRDERS)

SPAN 2
(TX46 GIRDERS)

SPAN 3
(TX46 GIRDERS)

① SEE IGEB STANDARD FOR ORIENTATION OF DIMENSION.

② SEE IGEB (MOD) PROJECT STANDARD FOR ORIENTATION OF DIMENSION AND MODIFIED ELASTOMERIC BEARING PAD DATA

③ GIRDER LENGTHS SHOWN ARE BOTTOM GIRDER FLANGE LENGTHS WITH ADJUSTMENTS MADE FOR BEAM SLOPE.

BENT REPORT

ABUT NO. 1 (S 85 36 46.33 E)
DISTANCE BETWEEN STATION LINE AND BEAM 1 139.762 L

		BEAM	BEAM SPAC. (C.L. BENT)	BEAM ANGLE D	M	S
SPAN	1	BEAM 1	0.000	75	5	2
		BEAM 2	9.942	75	0	0
		BEAM 3	9.857	75	0	0
		BEAM 4	9.857	75	0	0
		BEAM 5	9.857	75	0	0
		BEAM 6	9.857	75	0	0
		BEAM 16	5.424	75	0	0
		BEAM 17	5.424	75	0	0
		TOTAL	60.218			

BENT NO. 2 (S 85 36 46.33 E)
DISTANCE BETWEEN STATION LINE AND BEAM 1 139.678 L

		BEAM	BEAM SPAC. (C.L. BENT)	BEAM ANGLE D	M	S
SPAN	1	BEAM 1	0.000	75	5	2
		BEAM 2	9.857	75	0	0
		BEAM 3	9.857	75	0	0
		BEAM 4	9.857	75	0	0
		BEAM 5	9.857	75	0	0
		BEAM 6	9.857	75	0	0
		BEAM 16	5.424	75	0	0
		BEAM 17	5.424	75	0	0
		TOTAL	60.133			

BENT NO. 2 (S 85 36 46.33 E)
DISTANCE BETWEEN STATION LINE AND BEAM 1 139.678 L

		BEAM	BEAM SPAC. (C.L. BENT)	BEAM ANGLE D	M	S
SPAN	2	BEAM 1	0.000	75	26	38
		BEAM 2	9.079	75	0	0
		BEAM 3	8.344	75	0	0
		BEAM 4	8.344	75	0	0
		BEAM 5	8.344	75	0	0
		BEAM 6	8.344	75	0	0
		BEAM 7	8.344	75	0	0
		BEAM 17	5.424	75	0	0
		BEAM 18	5.424	75	0	0
		TOTAL	61.647			

BENT NO. 3 (S 85 36 46.33 E)
DISTANCE BETWEEN STATION LINE AND BEAM 1 138.942 L

		BEAM	BEAM SPAC. (C.L. BENT)	BEAM ANGLE D	M	S
SPAN	2	BEAM 1	0.000	75	26	38
		BEAM 2	8.344	75	0	0
		BEAM 3	8.344	75	0	0
		BEAM 4	8.344	75	0	0
		BEAM 5	8.344	75	0	0
		BEAM 6	8.344	75	0	0
		BEAM 7	8.344	75	0	0
		BEAM 17	5.424	75	0	0
		BEAM 18	5.424	75	0	0
		TOTAL	60.912			

BENT NO. 3 (S 85 36 46.33 E)
DISTANCE BETWEEN STATION LINE AND BEAM 1 138.942 L

		BEAM	BEAM SPAC. (C.L. BENT)	BEAM ANGLE D	M	S
SPAN	3	BEAM 1	0.000	75	50	4
		BEAM 2	10.555	75	0	0
		BEAM 3	9.570	75	0	0
		BEAM 4	9.570	75	0	0
		BEAM 5	9.570	75	0	0
		BEAM 6	9.570	75	0	0
		BEAM 16	5.424	75	0	0
		BEAM 17	5.424	75	0	0
		TOTAL	59.683			

ABUT NO. 4 (S 85 36 46.33 E)
DISTANCE BETWEEN STATION LINE AND BEAM 1 137.958 L

		BEAM	BEAM SPAC. (C.L. BENT)	BEAM ANGLE D	M	S
SPAN	3	BEAM 1	0.000	75	50	4
		BEAM 2	9.570	75	0	0
		BEAM 3	9.570	75	0	0
		BEAM 4	9.570	75	0	0
		BEAM 5	9.570	75	0	0
		BEAM 6	9.570	75	0	0
		BEAM 16	5.424	75	0	0
		BEAM 17	5.424	75	0	0
		TOTAL	58.698			

BEAM REPORT

BEAM REPORT, SPAN 1

	C-C BENT	HORIZONTAL DISTANCE C-C BRG.	TRUE DISTANCE BOT. BM. FLG.③	BEAM SLOPE
BEAM 1	55.738	53.703	55.24	0.0175
BEAM 2	55.760	53.725	55.26	0.0175
BEAM 3	55.760	53.725	55.26	0.0175
BEAM 4	55.760	53.725	55.26	0.0175
BEAM 5	55.760	53.725	55.26	0.0175
BEAM 6	55.760	53.725	55.26	0.0175
BEAM 16	55.760	53.725	55.26	0.0175
BEAM 17	55.760	53.725	55.26	0.0175

BEAM REPORT, SPAN 2

	C-C BENT	HORIZONTAL DISTANCE C-C BRG.	TRUE DISTANCE BOT. BM. FLG.③	BEAM SLOPE
BEAM 1	91.672	89.672	91.19	0.0176
BEAM 2	91.860	89.860	91.37	0.0174
BEAM 3	91.860	89.860	91.37	0.0174
BEAM 4	91.860	89.860	91.37	0.0174
BEAM 5	91.860	89.860	91.37	0.0174
BEAM 6	91.860	89.860	91.37	0.0174
BEAM 7	91.860	89.860	91.37	0.0174
BEAM 17	91.860	89.860	91.37	0.0175
BEAM 18	91.860	89.860	91.37	0.0175

BEAM REPORT, SPAN 3

	C-C BENT	HORIZONTAL DISTANCE C-C BRG.	TRUE DISTANCE BOT. BM. FLG.③	BEAM SLOPE
BEAM 1	65.282	63.251	64.78	0.0158
BEAM 2	65.530	63.495	65.03	0.0155
BEAM 3	65.530	63.495	65.03	0.0156
BEAM 4	65.530	63.495	65.03	0.0157
BEAM 5	65.530	63.495	65.03	0.0158
BEAM 6	65.530	63.495	65.03	0.0159
BEAM 16	65.530	63.495	65.03	0.0167
BEAM 17	65.530	63.495	65.03	0.0167

STATE OF TEXAS
TIMOTHY J. ROSS
98465
LICENSED
PROFESSIONAL ENGINEER
7/6/12

HS 20 LOADING (EXISTING)
HL 93 LOADING (WIDENING)

PESC
P.E. Structural Consultants, Inc.
www.PEStructural.com
TBPE Firm No. F-1475

Texas Department of Transportation
© 2012

IH 35W FROM NORTH TARRANT PKWY TO IH 820

GIRDER LAYOUT (SPANS 1-3)

NB IH 35W
OVER BIG FOSSIL CK

SCALE: NTS
SHEET 1 OF 1

DESIGN	FED.RD. DIV.NO.	FEDERAL AID PROJECT NO.		HIGHWAY NO.
TJR	6	(SEE TITLE SHEET)		IH 35W
GRAPHICS	STATE	DISTRICT	COUNTY	SHEET NO.
TLS	TEXAS	FTW	TARRANT	
CHECK	CONTROL	SECTION	JOB	1695
NRR				
CHECK	0014	16	255, ETC.	
AB				

FILENAME: S3BBR#BFC-NBML#GF#01.dgn
DRAWING DATE: 7/13/2012

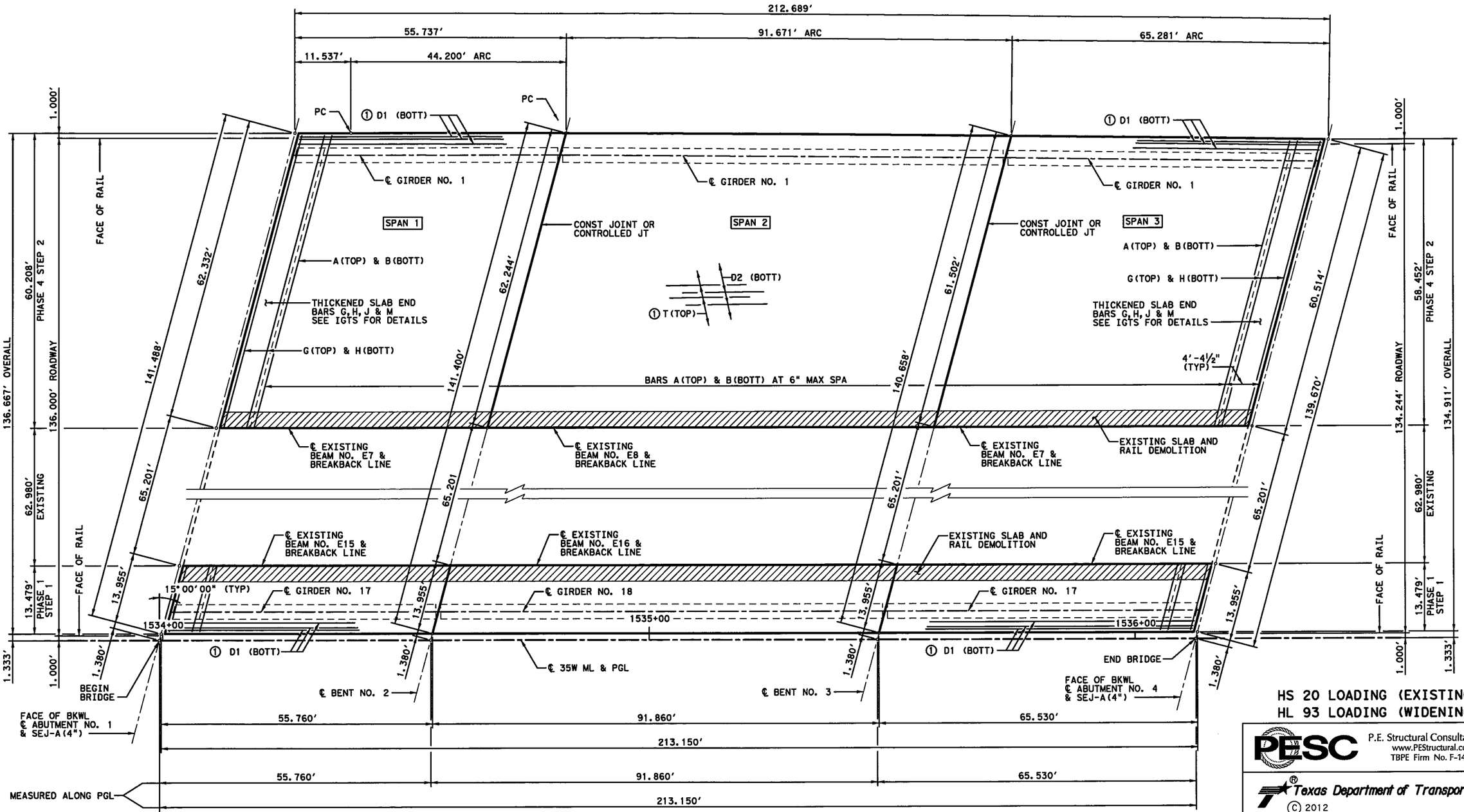

PLAN

① 2" END COVER ON BARS D1 AND T.

HS 20 LOADING (EXISTING)
HL 93 LOADING (WIDENING)

PESC
P.E. Structural Consultants, Inc.
www.PEStructural.com
TBPE Firm No. F-1475

Texas Department of Transportation

© 2012

IH 35W FROM NORTH TARRANT PKWY TO IH 820

213.15' PRESTRESSED CONCRETE I-GIRDER UNIT

NB IH 35W

OVER BIG FOSSIL CK

SCALE: NTS

SHEET 1 OF 3

DESIGN	FED. RD. DIV. NO.	FEDERAL AID PROJECT NO.		HIGHWAY NO.
TJR	6	(SEE TITLE SHEET)		IH 35W
GRAPHICS TLS	STATE	DISTRICT	COUNTY	SHEET NO.
CHECK NRR	TEXAS	FTW	TARRANT	1696
CHECK AB	CONTROL	SECTION	JOB	
	0014	16	255, ETC.	

STATE OF TEXAS
TIMOTHY J. ROSS
98465
LICENSED
PROFESSIONAL ENGINEER

8/29/12

FILENAME: S38BR*BFC-NBML*PB*01.dgn

DRAWING DATE: 7/13/2012

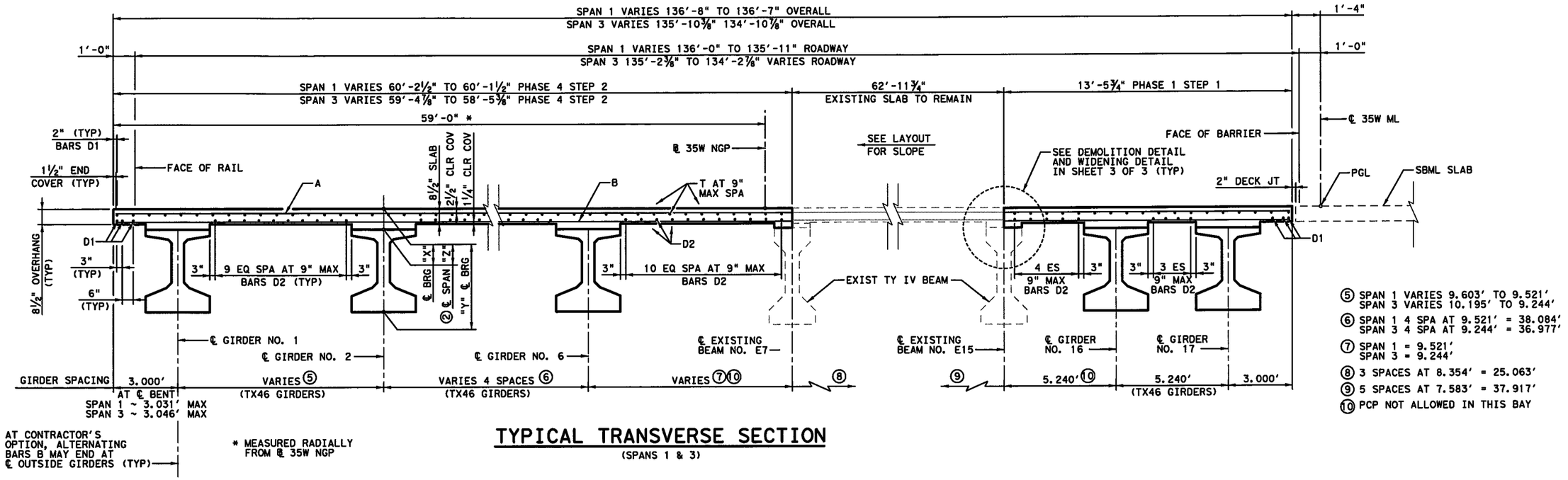

TYPICAL TRANSVERSE SECTION

(SPANS 1 & 3)

⑤ SPAN 1 VARIES 9.603' TO 9.521'
SPAN 3 VARIES 10.195' TO 9.244'

⑥ SPAN 1 4 SPA AT 9.521' = 38.084'
SPAN 3 4 SPA AT 9.244' = 36.977'

⑦ SPAN 1 = 9.521'
SPAN 3 = 9.244'

⑧ 3 SPACES AT 8.354' = 25.063'

⑨ 5 SPACES AT 7.583' = 37.917'

⑩ PCP NOT ALLOWED IN THIS BAY

GENERAL NOTES:

1. DESIGNED ACCORDING TO AASHTO LRFD BRIDGE DESIGN SPECIFICATIONS, 5TH EDITION (2010).
2. CLASS "S"(HPC) CONCRETE STRENGTH F'C = 4,000 PSI.
3. ALL REINFORCING SHALL BE GRADE 60 AND EPOXY COATED.
4. SEE PCP OR PMDF STANDARDS FOR DETAILS AND QUANTITY ADJUSTMENTS IF EITHER OF THESE OPTIONS ARE USED.
5. SEE IGTS STANDARD FOR THICKENED SLAB END DETAILS.
6. SEE IGMS STANDARD FOR MISCELLANEOUS SLAB DETAILS.
7. SEE RAIL STANDARD FOR RAIL ANCHORAGE IN SLAB.
8. BAR LAPS, WHERE REQUIRED, TO BE AS FOLLOWS:
   #4 = 2'-1"
   #5 = 2'-7"

TABLE OF ESTIMATED QUANTITIES PHASE 1 STEP 1

SPAN	REINF CONC SLAB	PRESTR CONC I-GIRDERS (TX46) ④	CL S CONC (HPC)	REINFORCING STEEL ③
NO.	SF	LF	CY	LB
1	752	110.52	21.4	4,888
2	1,238	182.74	36.6	8,047
3	883	130.06	25.2	5,740
TOTAL	2,873	423.32	83.2	18,675

TABLE OF ESTIMATED QUANTITIES PHASE 4 STEP 2

SPAN	REINF CONC SLAB	PRESTR CONC I-GIRDERS (TX46) ④	CL S CONC (HPC)	REINFORCING STEEL ③
NO.	SF	LF	CY	LB
1	3,355	331.54	92.5	21,808
2	5,490	639.41	156.5	35,685
3	3,861	389.93	106.3	25,097
TOTAL	12,706	1,360.88	355.3	82,590

③ REINFORCING STEEL WEIGHT IS CALCULATED USING AN APPROXIMATE FACTOR OF 6.5 LBS PER SQ FT.

④ LENGTHS SHOWN ARE BOTTOM OF GIRDER FLANGE LENGTHS WITH ADJUSTMENTS MADE FOR BEAM SLOPE. SEE GIRDER LAYOUT FOR GIRDER LENGTHS.

SPAN NO.	GIRDER NO.	"A" FT	"B" FT
1	1	0.011	0.015
	2-6	0.013	0.018
	16	0.007	0.011
	17	0.008	0.011
2	1	0.094	0.107
	2	0.106	0.121
	3	0.104	0.118
	4 to 7	0.104	0.119
	17	0.071	0.081
	18	0.075	0.086
3	1	0.025	0.029
	2	0.031	0.035
	3-6	0.030	0.034
	16	0.018	0.020
	17	0.019	0.022

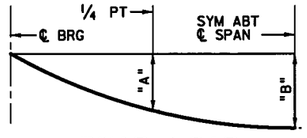

DEAD LOAD DEFLECTION DIAGRAM

CALCULATED DEFLECTIONS SHOWN ARE DUE TO THE CONCRETE SLAB ON INTERIOR GIRDERS ONLY (EC = 5000 KSI). ADJUST VALUES AS REQUIRED FOR EXTERIOR GIRDERS AND IF OPTIONAL SLAB FORMING IS USED. THESE VALUES MAY REQUIRE FIELD VERIFICATION.

TABLE OF SECTION DEPTHS

SPAN NO.	GIRDER NO.	"X" AT ℄ BRG	"Y" AT ℄ BRG	②"Z" AT ℄ SPAN
1	1-6	10 ½"	4'-8 ½"	9 ¾"
	16 & 17	10 ½"	4'-8 ½"	10"
2	1 & 3	1'- ½"	4'-10 ½"	9 ⅝"
	2	1'- ½"	4'-10 ½"	9 ½"
	4-7, 18	1'- ½"	4'-10 ½"	9 ¾"
	17	1'- ½"	4'-10 ½"	10 ½"
3	1, 4-6	10 ½"	4'-8 ½"	9 ⅝"
	2 & 3	10 ½"	4'-8 ½"	9 ½"
	16	10 ½"	4'-8 ½"	10 ⅛"
	17	10 ½"	4'-8 ½"	9 ⅞"

② THEORETICAL DIMENSION

BAR TABLE

BAR	SIZE
A	#5
B	#5
D	#5
G	#5
H	#5
J	#5
M	#5
T	#4
U	#4

STATE OF TEXAS
TIMOTHY J. ROSS
98465
LICENSED PROFESSIONAL ENGINEER
8/29/12

HS 20 LOADING (EXISTING)
HL 93 LOADING (WIDENING)

PESC P.E. Structural Consultants, Inc.
www.PEStructural.com
TBPE Firm No. F-1475

Texas Department of Transportation
© 2012

IH 35W FROM NORTH TARRANT PKWY TO IH 820

213.15' PRESTRESSED CONCRETE I-GIRDER UNIT

NB IH 35W OVER BIG FOSSIL CK

SCALE: NTS — SHEET 2 OF 3

DESIGN	FED.RD. DIV.NO.	FEDERAL AID PROJECT NO.		HIGHWAY NO.
TJR	6	(SEE TITLE SHEET)		IH 35W
GRAPHICS	STATE	DISTRICT	COUNTY	SHEET NO.
TLS	TEXAS	FTW	TARRANT	
CHECK	CONTROL	SECTION	JOB	1697
NRR / AB	0014	16	255, ETC.	

FILENAME: S3BBR*BFC-NBML*PB*02.dgn
DRAWING DATE: 7/13/2012

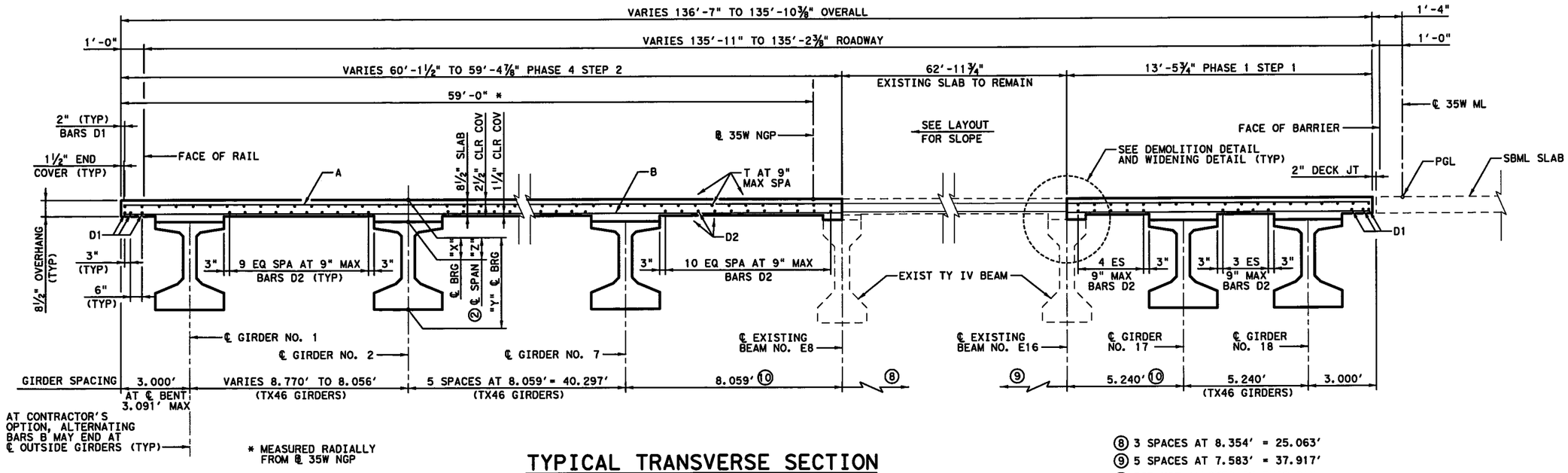

TYPICAL TRANSVERSE SECTION

(SPAN 2)

⑧ 3 SPACES AT 8.354' = 25.063'
⑨ 5 SPACES AT 7.583' = 37.917'
⑩ PCP NOT ALLOWED IN THIS BAY
⑪ EXISTING TRANSVERSE STEEL TO REMAIN. CLEAN EXISTING REINFORCEMENT BY WET OR DRY GRIT BLASTING. BLAST CORRODED REINFORCEMENT TO GRAY METAL. REPAIR OR REPLACE DAMAGED OR BROKEN BARS USING A METHOD APPROVED BY THE ENGINEER.

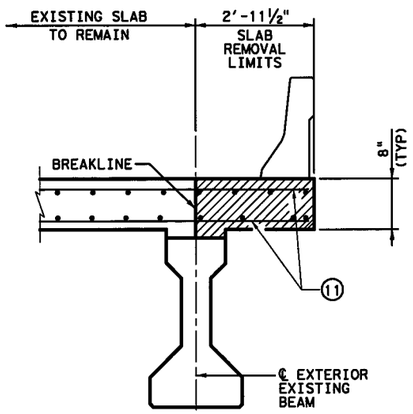

DEMOLITION DETAIL

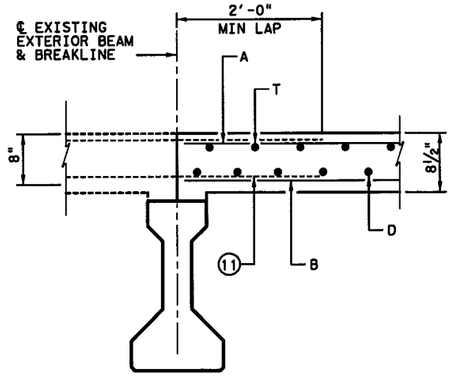

WIDENING DETAIL

STATE OF TEXAS
TIMOTHY J. ROSS
98465
LICENSED
PROFESSIONAL ENGINEER

Timothy J. Ross 8/29/12

HS 20 LOADING (EXISTING)
HL 93 LOADING (WIDENING)

PESC P.E. Structural Consultants, Inc.
www.PEStructural.com
TBPE Firm No. F-1475

Texas Department of Transportation
© 2012

IH 35W FROM NORTH TARRANT PKWY TO IH 820

213.15' PRESTRESSED CONCRETE I-GIRDER UNIT

NB IH 35W

OVER BIG FOSSIL CK

SCALE: NTS — SHEET 3 OF 3

DESIGN	FED.RD. DIV.NO.	FEDERAL AID PROJECT NO.		HIGHWAY NO.
TJR	6	(SEE TITLE SHEET)		IH 35W
GRAPHICS TLS	STATE	DISTRICT	COUNTY	SHEET NO.
CHECK NRR	TEXAS	FTW	TARRANT	1698
CHECK AB	CONTROL	SECTION	JOB	
	0014	16	255, ETC.	

DRAWING DATE: 7/13/2012 FILENAME: S3BBR*BFC-NBML*PB*03.dgn

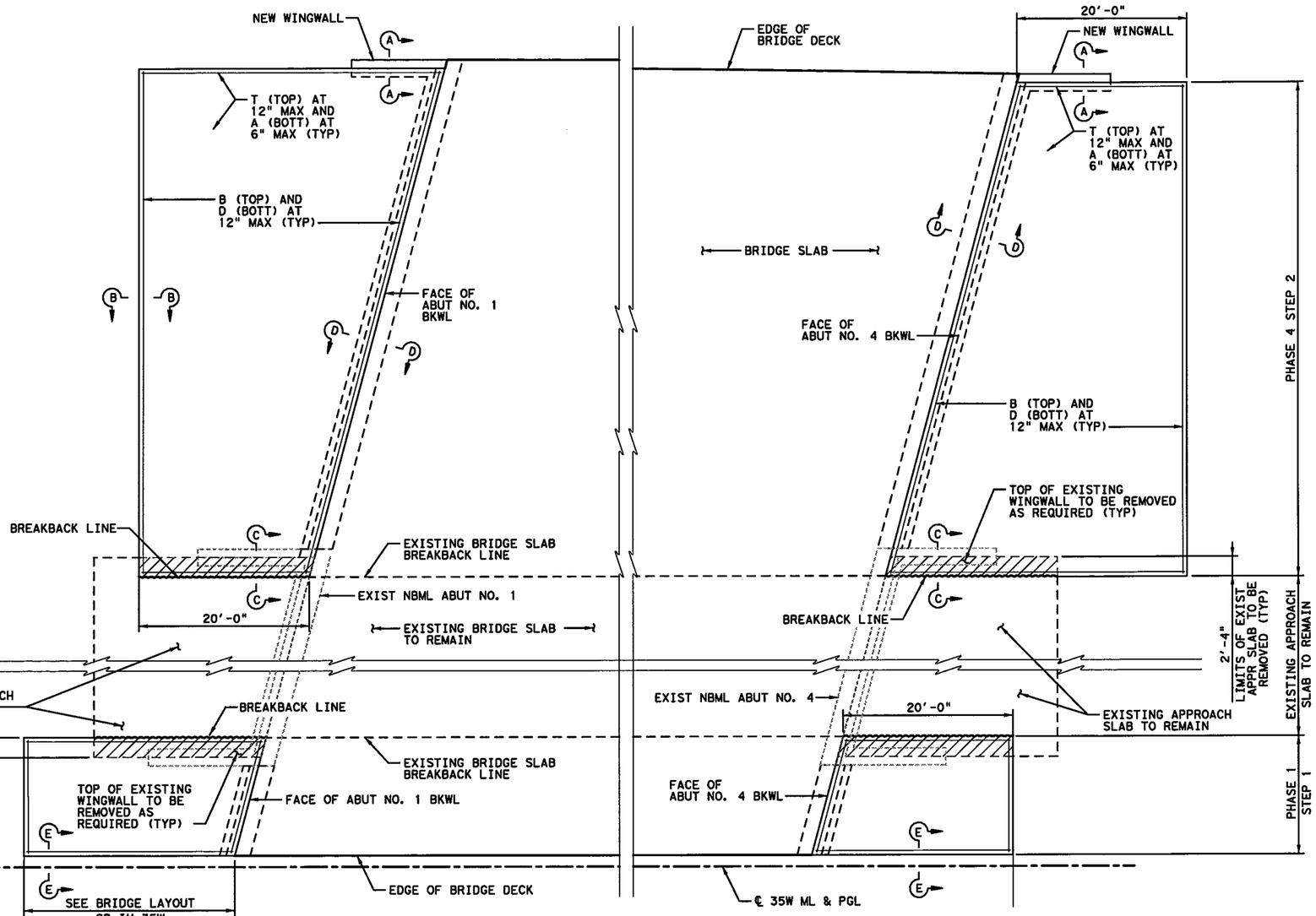

PLAN
(ABUTMENT NO. 1)

PLAN
(ABUTMENT NO. 4)

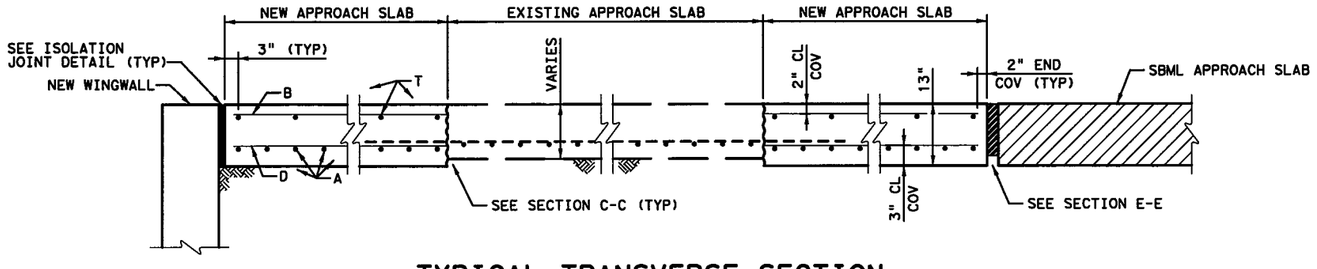

TYPICAL TRANSVERSE SECTION
(SEE LAYOUT FOR CROSS-SLOPE)

GENERAL NOTES:

1. SEE BAS-A OR BAS-C STANDARDS FOR INFORMATION NOT SHOWN.
2. CONCRETE SHALL BE CLASS "S" (HPC) WITH A MINIMUM COMPRESSIVE STRENGTH OF 4,000 PSI.
3. ALL REINFORCING SHALL BE GRADE 60 AND EPOXY COATED.
4. BAR LAPS, WHERE REQUIRED, SHALL BE AS FOLLOWS:
   #4 = 2'-1"
   #5 = 2'-7"
5. SEE SHEET 2 OF 2 FOR SECTIONS AND OTHER DETAILS.

STATE OF TEXAS
TIMOTHY J. ROSS
98465
LICENSED
PROFESSIONAL ENGINEER

Timothy J. Ross 8/29/12

HS 20 LOADING (EXISTING)
HL 93 LOADING (WIDENING)

PESC
P.E. Structural Consultants, Inc.
www.PEStructural.com
TBPE Firm No. F-1475

Texas Department of Transportation
© 2012

IH 35W FROM NORTH TARRANT PKWY TO IH 820

APPROACH SLAB DETAILS
NB IH 35W
OVER BIG FOSSIL CK

SCALE: NTS — SHEET 1 OF 2

DESIGN	FED. RD. DIV. NO.	FEDERAL AID PROJECT NO.		HIGHWAY NO.
TJR	6	(SEE TITLE SHEET)		IH 35W
GRAPHICS	STATE	DISTRICT	COUNTY	SHEET NO.
TLS	TEXAS	FTW	TARRANT	1699
CHECK	CONTROL	SECTION	JOB	
NRR	0014	16	255, ETC.	
CHECK				
AB				

FILENAME: S38BR*BFC-NBML*AS*01.dgn
DRAWING DATE: 7/13/2012

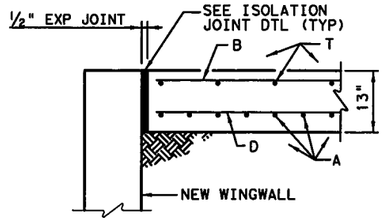

SECTION A-A

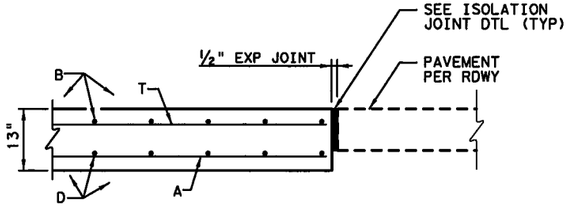

SECTION B-B

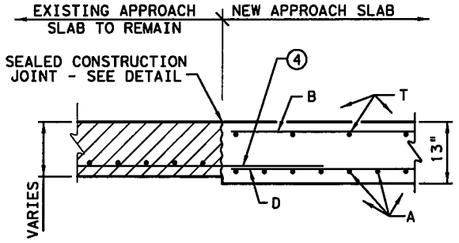

SECTION C-C

④ EXISTING REINFORCING TO EXTEND INTO NEW CONSTRUCTION AND LAP WITH NEW SLAB BARS. CLEAN EXISTING REINFORCING BY WET OR DRY GRIT BLASTING. BLAST CORRODED REINFORCING TO GRAY METAL. REPAIR OR REPLACE DAMAGED OR BROKEN BARS USING A METHOD APPROVED BY THE ENGINEER.

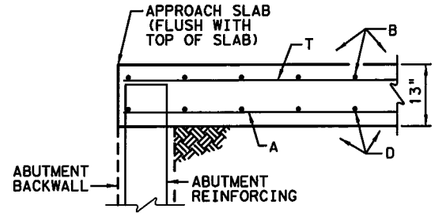

SECTION D-D

① PLACE IN ACCORDANCE WITH ITEM 438.

② BACKER ROD SHALL BE 25% LARGER THAN JOINT OPENING AND SHALL BE COMPATIBLE WITH THE SEALANT.

③ PLACE ½" PREFORMED BITUMINOUS FIBER MATERIAL BETWEEN CONCRETE RAILING AND TOP OF APPROACH SLAB AS SHOWN WHEN CONCRETE RAILING PROJECTS OVER THE APPROACH SLAB.

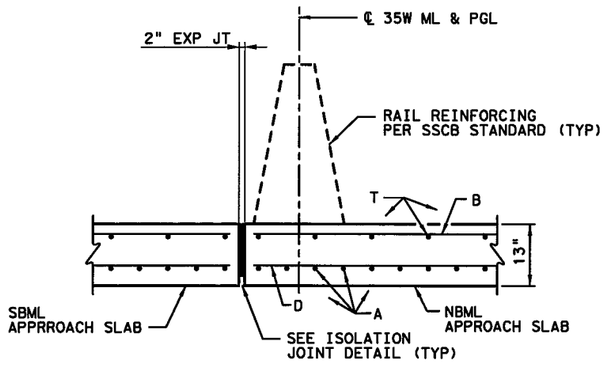

SECTION E-E

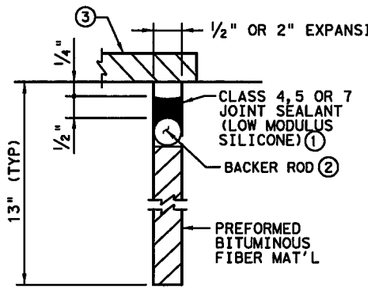

ISOLATION JOINT DETAIL

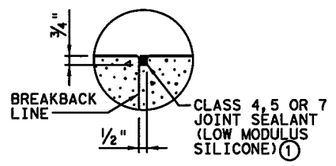

SEALED CONSTRUCTION JOINT DETAIL

BAR TABLE	
BAR	SIZE
A	#8
B	#5
D	#5
E	#5
T	#5

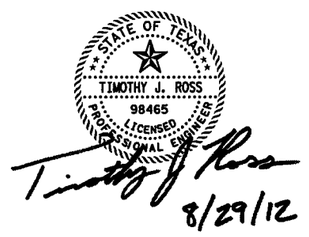

HS 20 LOADING (EXISTING)
HL 93 LOADING (WIDENING)

PESC P.E. Structural Consultants, Inc.
www.PEStructural.com
TBPE Firm No. F-1475

Texas Department of Transportation
© 2012

IH 35W FROM NORTH TARRANT PKWY TO IH 820

APPROACH SLAB DETAILS
NB IH 35W
OVER BIG FOSSIL CK

SCALE: NTS — SHEET 2 OF 2

DESIGN	FED. RD. DIV. NO.	FEDERAL AID PROJECT NO.		HIGHWAY NO.
TJR	6	(SEE TITLE SHEET)		IH 35W
GRAPHICS: TLS	STATE	DISTRICT	COUNTY	SHEET NO.
CHECK: NRR	TEXAS	FTW	TARRANT	1700
CHECK: AB	CONTROL	SECTION	JOB	
	0014	16	255, ETC.	

FILENAME: S38BR*BFC-NBML*AS*02.dgn
DRAWING DATE: 7/13/2012

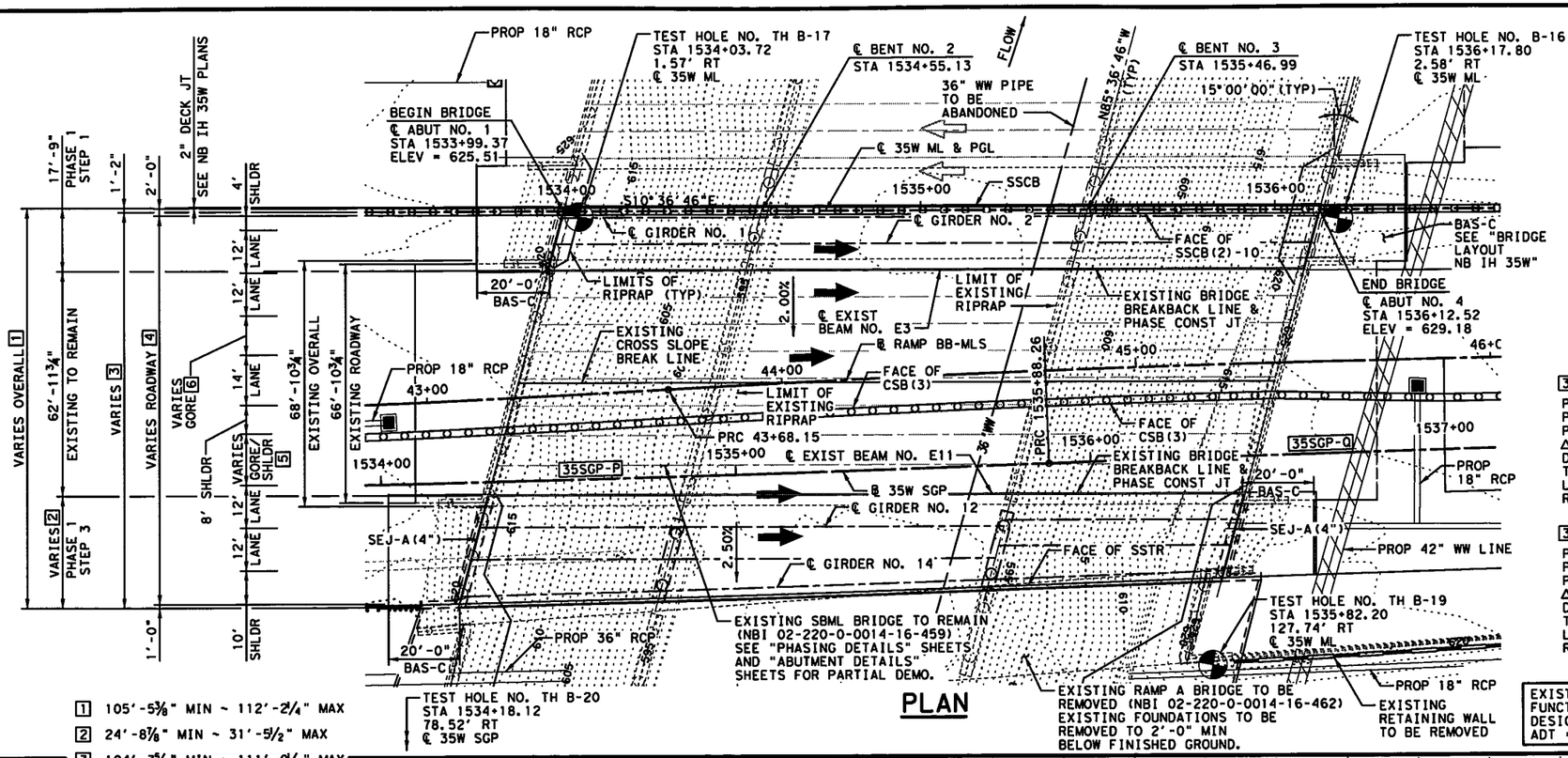

1 105'-5⅜" MIN ~ 112'-2¼" MAX
2 24'-8⅞" MIN ~ 31'-5½" MAX
3 104'-3⅜" MIN ~ 111'-0¼" MAX
4 102'-3⅜" MIN ~ 109'-0¼" MAX
5 15'-3½" MIN ~ 17'-9⅞" MAX
6 0'-0" MIN ~ 9'-0⅞" MAX

PLAN

HORIZONTAL CURVE DATA

35SGP-P
PC STATION = 1531+60.04
PI STATION = 1533+74.17
PT STATION = 1535+88.26
Δ = 2° 08' 27.86" (LT)
D = 0° 30' 00.00"
T = 214.13'
L = 428.21'
R = 11,459.16'

35SGP-Q
PC STATION = 1535+88.26
PI STATION = 1538+02.39
PT STATION = 1540+16.47
Δ = 2° 08' 27.86" (RT)
D = 0° 30' 00.00"
T = 214.13'
L = 428.21'
R = 11,459.16'

EXIST NBI = 02-220-0-0014-16-459
FUNCTIONAL CLASS = URBAN FREEWAY
DESIGN SPEED = 70 MPH
ADT = 95,400 (2030)

GENERAL NOTES:

1. DESIGNED ACCORDING TO AASHTO LRFD BRIDGE DESIGN SPECIFICATIONS, 5TH EDITION (2010).
2. ALL DIMENSIONS ARE EITHER HORIZONTAL OR VERTICAL AND MUST BE CORRECTED FOR GRADE, CROWN, AND/OR SUPERELEVATION.
3. "D" DENOTES BENTS WITH DOWEL BARS "D" AND SLOTTED HOLES AT THE ENDS OF EXTERIOR GIRDERS ONLY.
4. SEE "BORING LOGS - BRIDGE" SHEETS FOR GEOTECHNICAL INFORMATION. FOR DRILLING LOG INFORMATION RELATED TO TH B-17 AND TH B-19 REFERENCE DESIGN PLANS FOR CSJ 0041-16-211 DATED FEB 1995.
5. CONTRACTOR TO VERIFY LOCATION OF ALL UTILITIES PRIOR TO EXCAVATION.
6. THE "H" VALUES SHOWN ARE ESTIMATED COLUMN HEIGHTS. CONTRACTOR IS RESPONSIBLE FOR CALCULATING ACTUAL COLUMN HEIGHTS BASED ON FIELD CONDITIONS.
7. CONTRACTOR TO VERIFY ALL ELEVATIONS AND DIMENSIONS TO EXISTING STRUCTURES IN THE FIELD PRIOR TO COMMENCING WORK OR ORDERING MATERIALS.
8. FOR TYPICAL SECTIONS SEE "PHASING DETAILS" SHEET.
9. SEE ROADWAY PLANS FOR EXISTING RIPRAP REMOVAL. EXISTING REINFORCING IN RIPRAP SHALL REMAIN AND LAP WITH NEW REINFORCING (IF REQUIRED). SEE CRR STANDARD FOR RIPRAP REINFORCING.
10. ALLOWANCE FOR FUTURE RESURFACING: 23.3 PSF.
11. CONTRACTOR SHALL NOT USE THE EXISTING BRIDGE SBML FOR FORMING, GRADING OR SCREEDING THE NEW BRIDGE DECK. DECK CONSTRUCTION AND PLACEMENT OPERATIONS SHALL BE COMPLETELY INDEPENDENT OF THE ADJACENT STRUCTURE.

HS 20 LOADING (EXISTING)
HL 93 LOADING (WIDENING)

HYDRAULIC DATA (50 YR DESIGN)

Q50 = 18,155 CFS	Q100 = 21,003 CFS
HW50 = 610.42'	HW100 = 611.69'
V50 = 7.81 FPS	V100 = 8.31 FPS

REHABILITATION FOR THE EXISTING BRIDGE WILL INCLUDE THE FOLLOWING:
1. DECK - CLEAN OUT THE DEBRIS AND SAND FROM THE JOINTS, REPAIR THE VARIOUS CRACKS IN THE DECK AND APPROACH SLABS, AND REPAIR THE VARIOUS VERTICAL AND HORIZONTAL CRACKS IN THE RAILS IN ACCORDANCE WITH ITEM 438 "CLEANING AND SEALING JOINTS AND CRACKS."
2. ABUTMENTS - REPAIR ALL CRACKS AND SPALLS AT THE BACKWALLS, CAPS, AND WINGWALLS IN ACCORDANCE WITH ITEM 438 AND ITEM 429 "CONCRETE STRUCTURAL REPAIR."

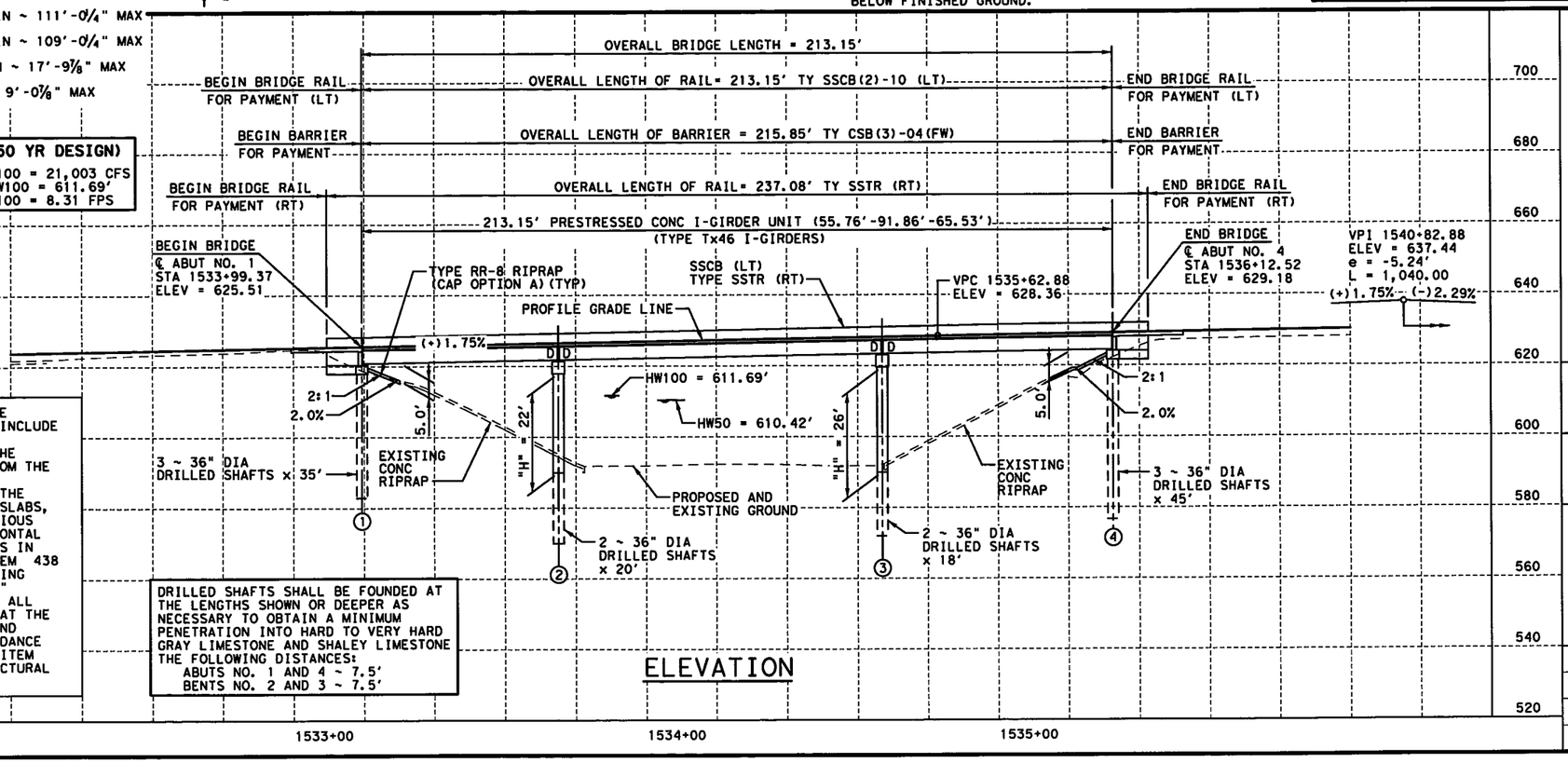

DRILLED SHAFTS SHALL BE FOUNDED AT THE LENGTHS SHOWN OR DEEPER AS NECESSARY TO OBTAIN A MINIMUM PENETRATION INTO HARD TO VERY HARD GRAY LIMESTONE AND SHALEY LIMESTONE THE FOLLOWING DISTANCES:
ABUTS NO. 1 AND 4 ~ 7.5'
BENTS NO. 2 AND 3 ~ 7.5'

ELEVATION

STATE OF TEXAS
TIMOTHY J. ROSS
98465
LICENSED
PROFESSIONAL ENGINEER
Timothy J. Ross
8/29/12

P.E. Structural Consultants, Inc.
www.PEStructural.com
TBPE Firm No. F-1475

Texas Department of Transportation
© 2012

IH 35W FROM NORTH TARRANT PKWY TO IH 820

BRIDGE LAYOUT
SB IH 35W
OVER BIG FOSSIL CK

SCALE: 1" = 40' SHEET 1 OF 1

DESIGN	FED. RD. DIV. NO.	FEDERAL AID PROJECT NO.		HIGHWAY NO.
TJR	6	(SEE TITLE SHEET)		IH 35W
GRAPHICS TLS	STATE	DISTRICT	COUNTY	SHEET NO.
CHECK NRR	TEXAS	FTW	TARRANT	1701
CHECK AB	CONTROL	SECTION	JOB	
	0014	16	255, ETC.	

FILENAME: S3BBR*BFC-SBML*BL*01.dgn
DRAWING DATE: 7/13/2012

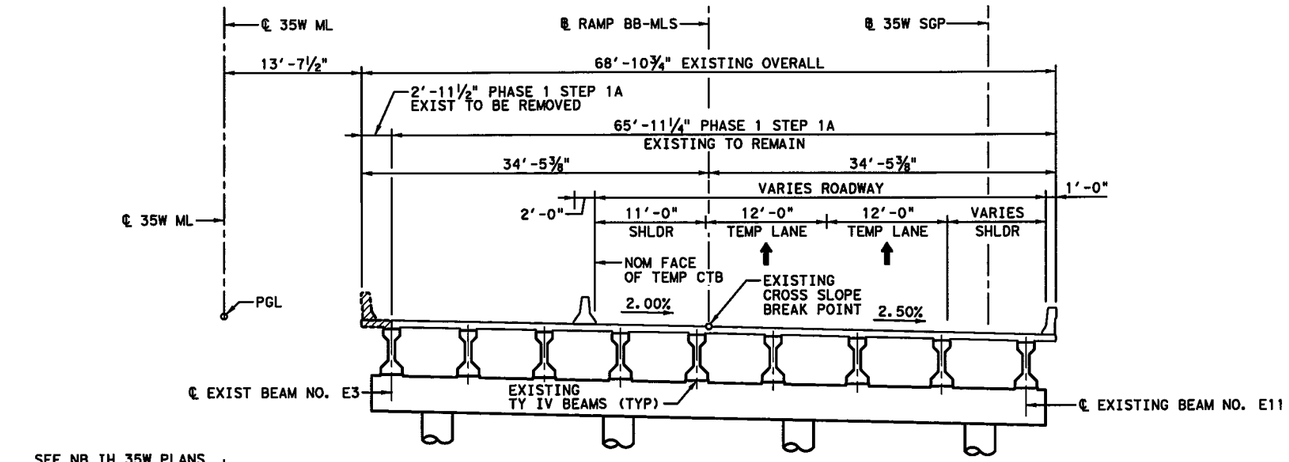

PHASE 1 STEP 1A CONSTRUCTION TYPICAL SECTION

(NTS)

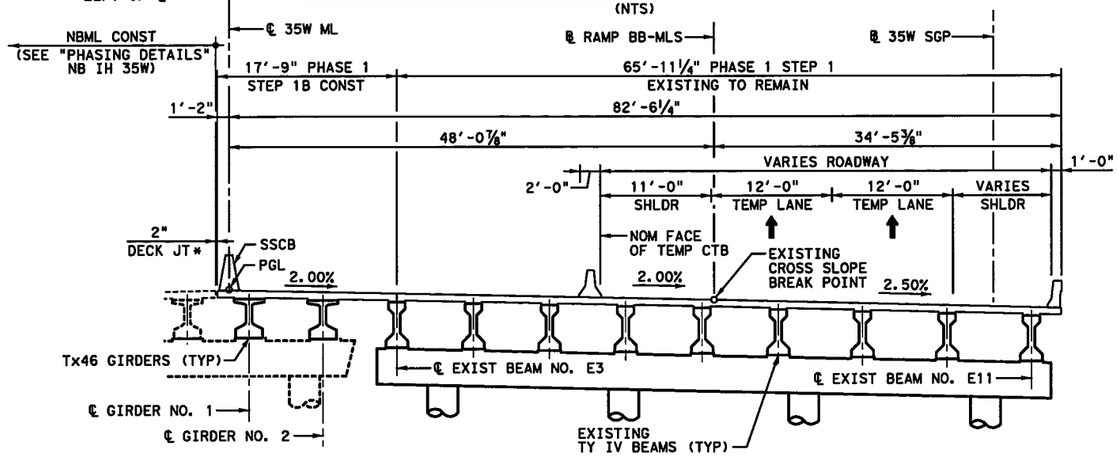

PHASE 1 STEP 1B CONSTRUCTION TYPICAL SECTION

(NTS)

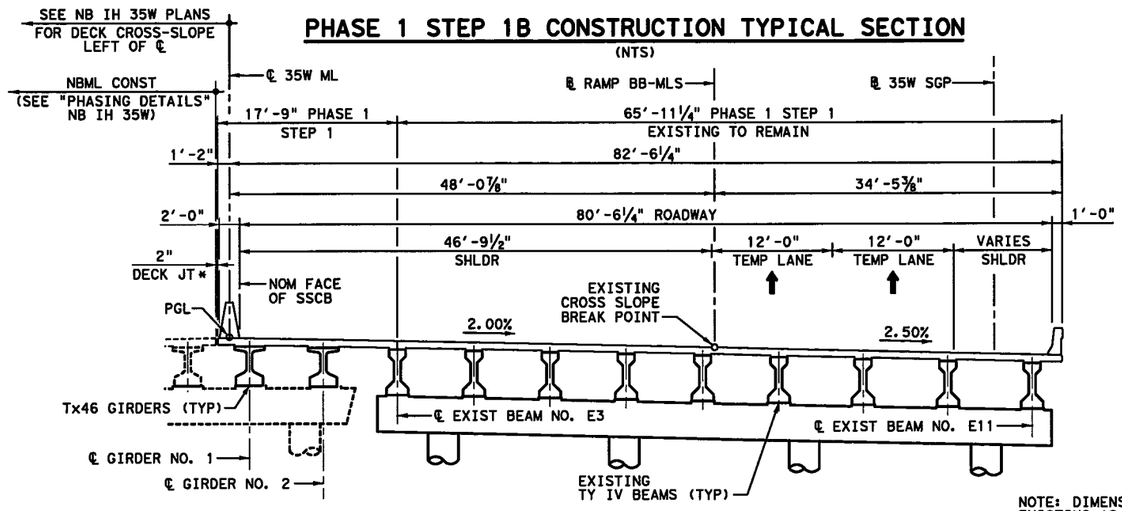

COMPLETED PHASE 1 STEP 1 TYPICAL SECTION

(NTS)

NOTE: DIMENSIONS ARE TAKEN FROM EXISTING AS-BUILT PLANS.

* SEE NB IH 35W DRAWINGS FOR MORE INFORMATION.

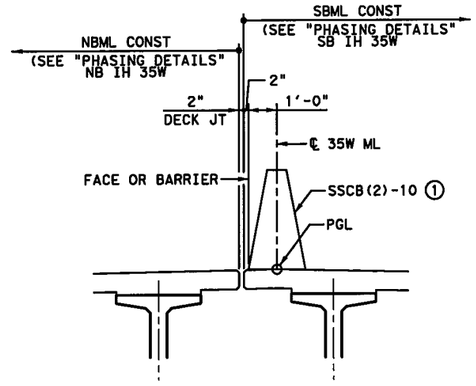

DECK JOINT AT BARRIER

① SEE SSCB(2)-10 STANDARD FOR ANCHORAGE TO DECK.

STATE OF TEXAS
TIMOTHY J. ROSS
98465
LICENSED
PROFESSIONAL ENGINEER

Timothy J. Ross 8/29/12

HS 20 LOADING (EXISTING)
HL 93 LOADING (WIDENING)

PESC P.E. Structural Consultants, Inc.
www.PEStructural.com
TBPE Firm No. F-1475

Texas Department of Transportation
© 2012

IH 35W FROM NORTH TARRANT PKWY TO IH 820

PHASING DETAILS
SB IH 35W
OVER BIG FOSSIL CK

SCALE: NTS — SHEET 1 OF 2

DESIGN	FED.RD. DIV.NO.	FEDERAL AID PROJECT NO.		HIGHWAY NO.
TJR	6	(SEE TITLE SHEET)		IH 35W
GRAPHICS TLS	STATE	DISTRICT	COUNTY	SHEET NO.
CHECK NRR	TEXAS	FTW	TARRANT	1702
CHECK AB	CONTROL	SECTION	JOB	
	0014	16	255, ETC.	

FILENAME: S3BBR*BFC-SBML*PD*01.dgn
DRAWING DATE: 7/13/2012

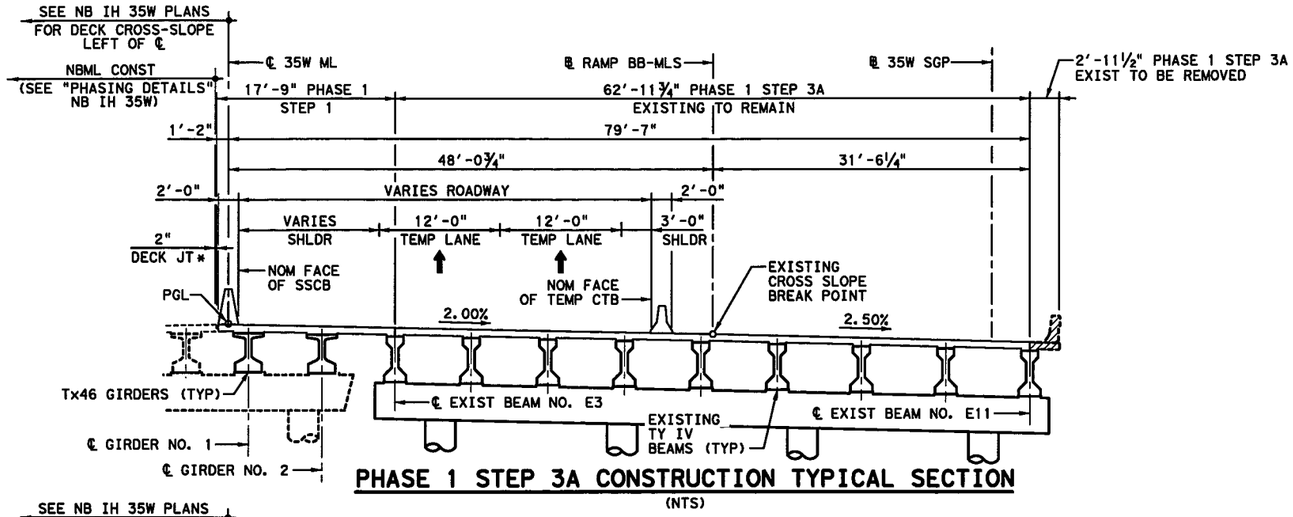

PHASE 1 STEP 3A CONSTRUCTION TYPICAL SECTION

(NTS)

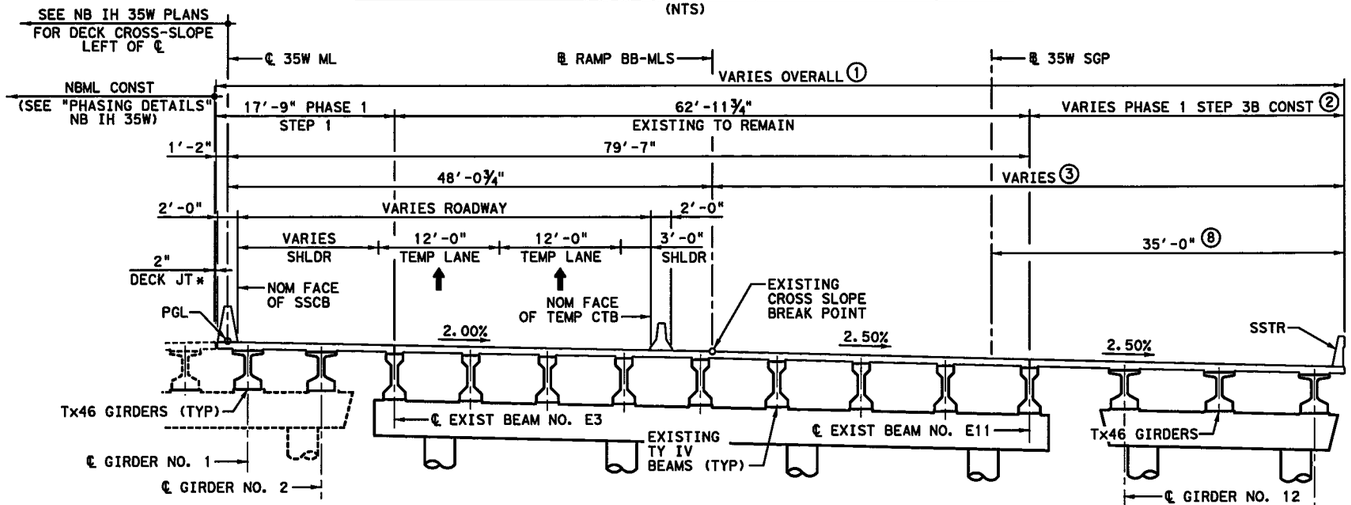

PHASE 1 STEP 3B CONSTRUCTION TYPICAL SECTION

(NTS)

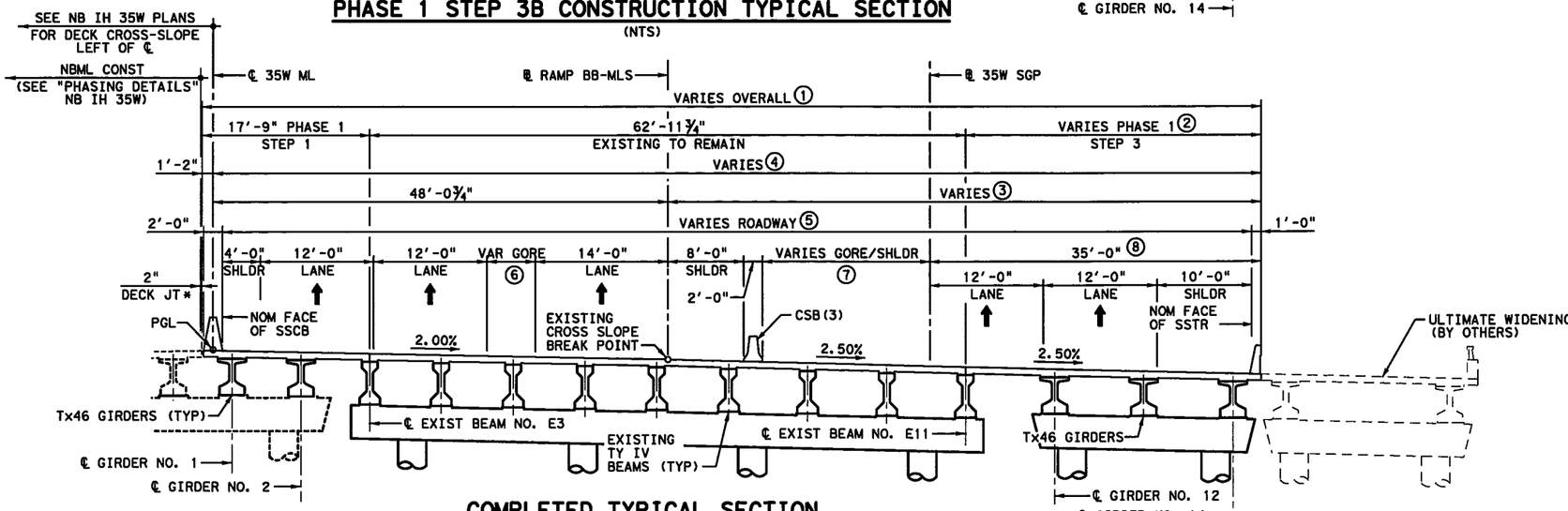

COMPLETED TYPICAL SECTION

(NTS)

① 105'-5⅝" MIN ~ 112'-2¼" MAX
② 24'-8⅞" MIN ~ 31'-5½" MAX
③ 56'-2¾" MIN ~ 62'-11⅜" MAX
④ 104'-3⅝" MIN ~ 111'-0¼" MAX
⑤ 102'-3⅝" MIN ~ 109'-0¼" MAX
⑥ 0'-0" MIN ~ 9'-0⅞" MAX
⑦ 13'-2¼" MIN ~ 15'-11⅝" MAX
⑧ MEASURED RADIALLY FROM ℄ 35W SGP

NOTE: DIMENSIONS ARE TAKEN FROM EXISTING AS-BUILT PLANS.

* SEE NB IH 35W DRAWINGS FOR MORE INFORMATION.

STATE OF TEXAS
TIMOTHY J. ROSS
98465
LICENSED
PROFESSIONAL ENGINEER

Timothy J. Ross 8/29/12

HS 20 LOADING (EXISTING)
HL 93 LOADING (WIDENING)

PESC
P.E. Structural Consultants, Inc.
www.PEStructural.com
TBPE Firm No. F-1475

Texas Department of Transportation
© 2012

IH 35W FROM NORTH TARRANT PKWY TO IH 820

PHASING DETAILS
SB IH 35W
OVER BIG FOSSIL CK

SCALE: NTS — SHEET 2 OF 2

DESIGN	FED. RD. DIV. NO.	FEDERAL AID PROJECT NO.		HIGHWAY NO.
TJR	6	(SEE TITLE SHEET)		IH 35W
GRAPHICS: TLS	STATE	DISTRICT	COUNTY	SHEET NO.
CHECK: NRR	TEXAS	FTW	TARRANT	1703
CHECK: AB	CONTROL	SECTION	JOB	
	0014	16	255, ETC.	

FILENAME: S38BR*BFC-SBML*PD*02.dgn
DRAWING DATE: 7/13/2012

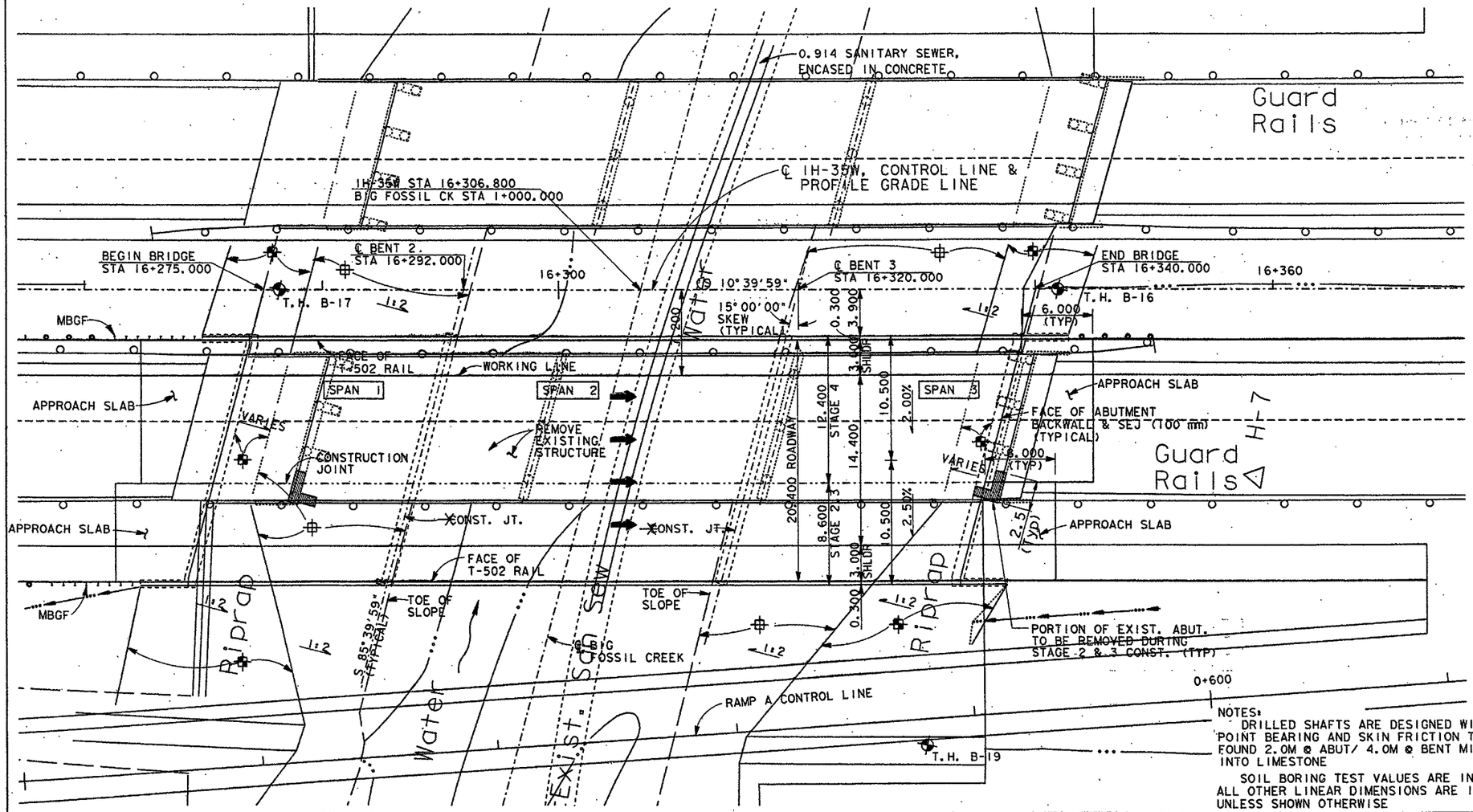

SCALE IN METERS
0 2 5 10m
SCALE: 1:200

TEST HOLE LEGEND
- CONCRETE
- ASPHALT
- FILL
- CLAY
- SHALE
- LIMESTONE
- LIMESTONE WITH CLAY
- LIMESTONE WITH SHALE

BEAM END TREATMENT REQUIRED AT INTERIOR BENTS (SEE "MISC. BRIDGE DETAILS" STANDARD SHT.)

LIMIT OF EXISTING RIPRAP TO REMAIN

LIMIT OF BRIDGE RIPRAP FOR PAYMENT

DESIGN SPEED = 110 KM/H
REPLACEMENT BRIDGE
NBI # 02-220-0-0014-16-458
PSN # 0014-16-458

NOTES:
DRILLED SHAFTS ARE DESIGNED WITH POINT BEARING AND SKIN FRICTION TO FOUND 2.0M @ ABUT/ 4.0M @ BENT MINIMUM INTO LIMESTONE

SOIL BORING TEST VALUES ARE IN mm, ALL OTHER LINEAR DIMENSIONS ARE IN m UNLESS SHOWN OTHERWISE

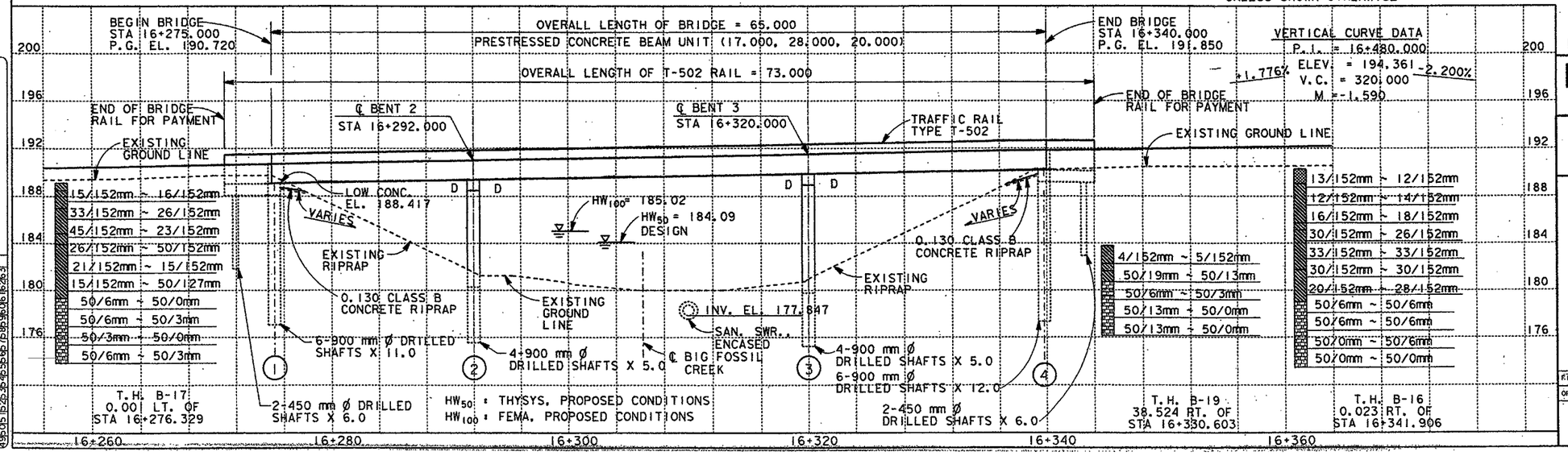

LEVELS DISPLAYED
ACC: 1 2 3 4 5 6 7 8 9 10 11 12 13 14 15 16

The seal appearing on this document was authorized by Daniel J.C. Copps III, P.E. 64481, on August 8, 1997

FOR CONTRACTOR INFORMATION ONLY

MS18 LOADING SHEET 1 OF 2

Brown & Root, Inc.
Houston, Texas

Turner Collie & Braden Inc.
ENGINEERS• PLANNERS• PROJECT MANAGERS

Texas Department of Transportation
Design Division (Bridge)

BRIDGE LAYOUT

BIG FOSSIL CREEK BRIDGE SOUTHBOUND MAINLANES

FILE: D71L0A06.DGN	DN: TCB	CK: BR	DW: TCB	CK: BR
ORIG DATE:	DIST	FED REG	FEDERAL AID PROJECT •	SHEET
REVISIONS	02	6	DPI 0101(001)	1704
	COUNTY		CONTROL	SECT	JOB	HIGHWAY
	TARRANT		0014	16	211	IH-35W

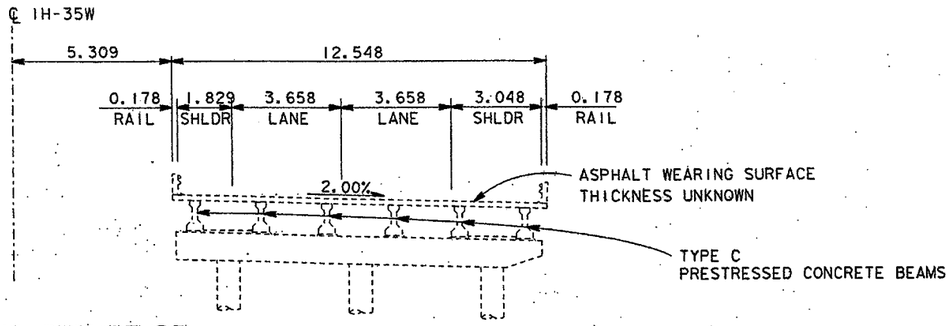

EXISTING STRUCTURE

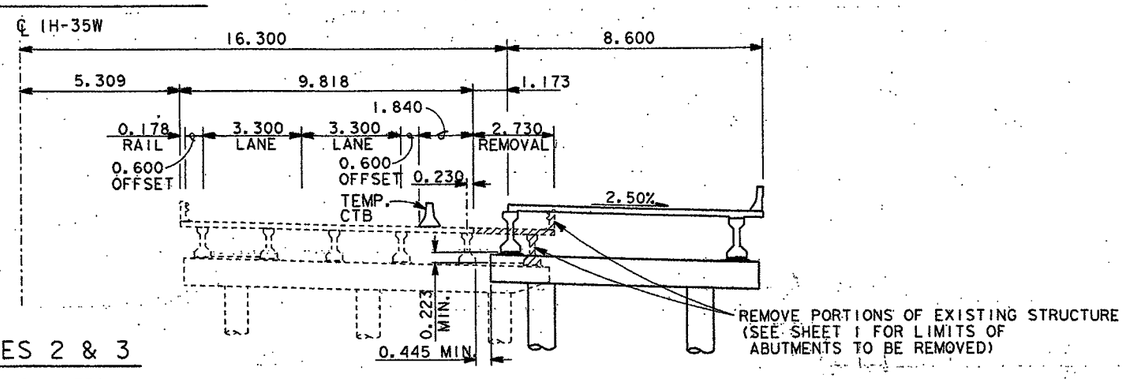

STAGES 2 & 3

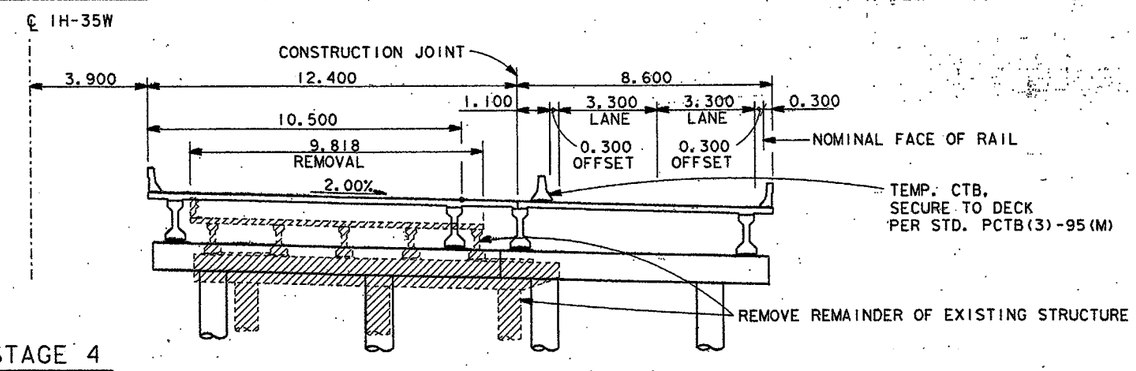

STAGE 4

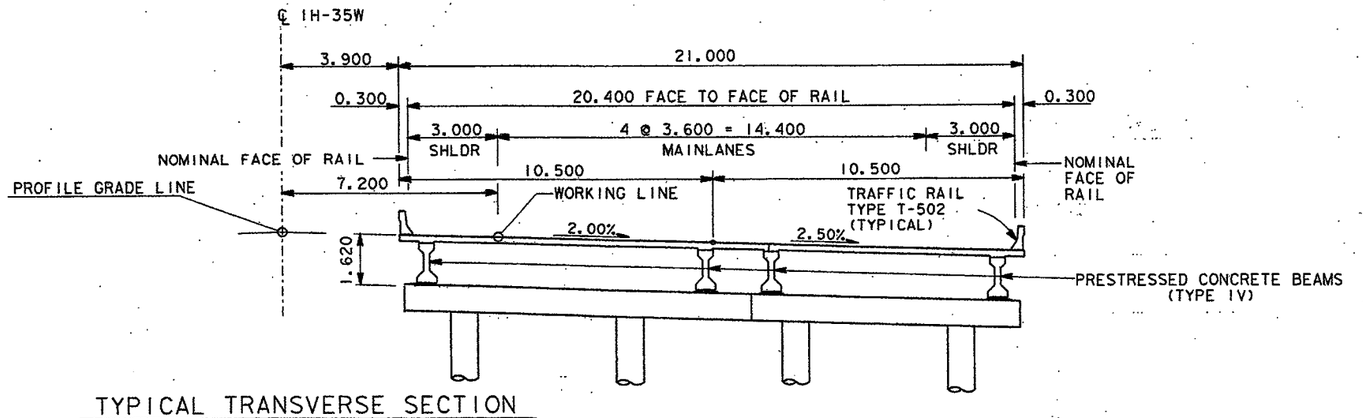

TYPICAL TRANSVERSE SECTION

STAGE 1 INVOLVES NO BRIDGE CONSTRUCTION. TRAFFIC LOCATION SHIFTS FROM EXISTING LOCATION TO ACCOMMODATE REPLACEMENT OF ASPHALT ROADWAY INSIDE SHOULDER. SEE ROADWAY CONSTRUCTION STAGING DRAWINGS.

STAGE 1

NOTE:
ALL LINEAR DIMENSIONS ARE IN METERS UNLESS SHOWN OTHERWISE.

SCALE IN METERS
0 1 2 4 6m
SCALE: 1:100

STATE OF TEXAS
DANIEL J.C. COPPS III
64481
REGISTERED PROFESSIONAL ENGINEER
The seal appearing on this document was authorized by Daniel J.C. Copps III, P.E. 64481, on August 8, 1997

FOR CONTRACTOR INFORMATION ONLY

MS18 LOADING

Brown & Root, Inc.
Houston, Texas

Turner Collie & Braden Inc.
ENGINEERS• PLANNERS• PROJECT MANAGERS

Texas Department of Transportation
Design Division (Bridge)

BRIDGE LAYOUT

BIG FOSSIL CREEK BRIDGE SOUTHBOUND MAINLANES

FILE: D71L0A07.DGN	DN: TCB	CK: BR	DW: TCB	CK: BR
ORIG DATE:	DIST	FED REG	FEDERAL AID PROJECT •	SHEET
REVISIONS	02	6	DRE 0101 (004)	1705
	COUNTY		CONTROL SECT JOB	HIGHWAY
	TARRANT		0014 16 211	IH-35W

LEVELS DISPLAYED ACC:
1 2 3 4 5 6 7 8 9 10 11 12 13 14 15 16
17 18 19 20 21 22 23 24 25 26 27 28 29 30 31 32
33 34 35 36 37 38 39 40 41 42 43 44 45 46 47 48
49 50 51 52 53 54 55 56 57 58 59 60 61 62 63

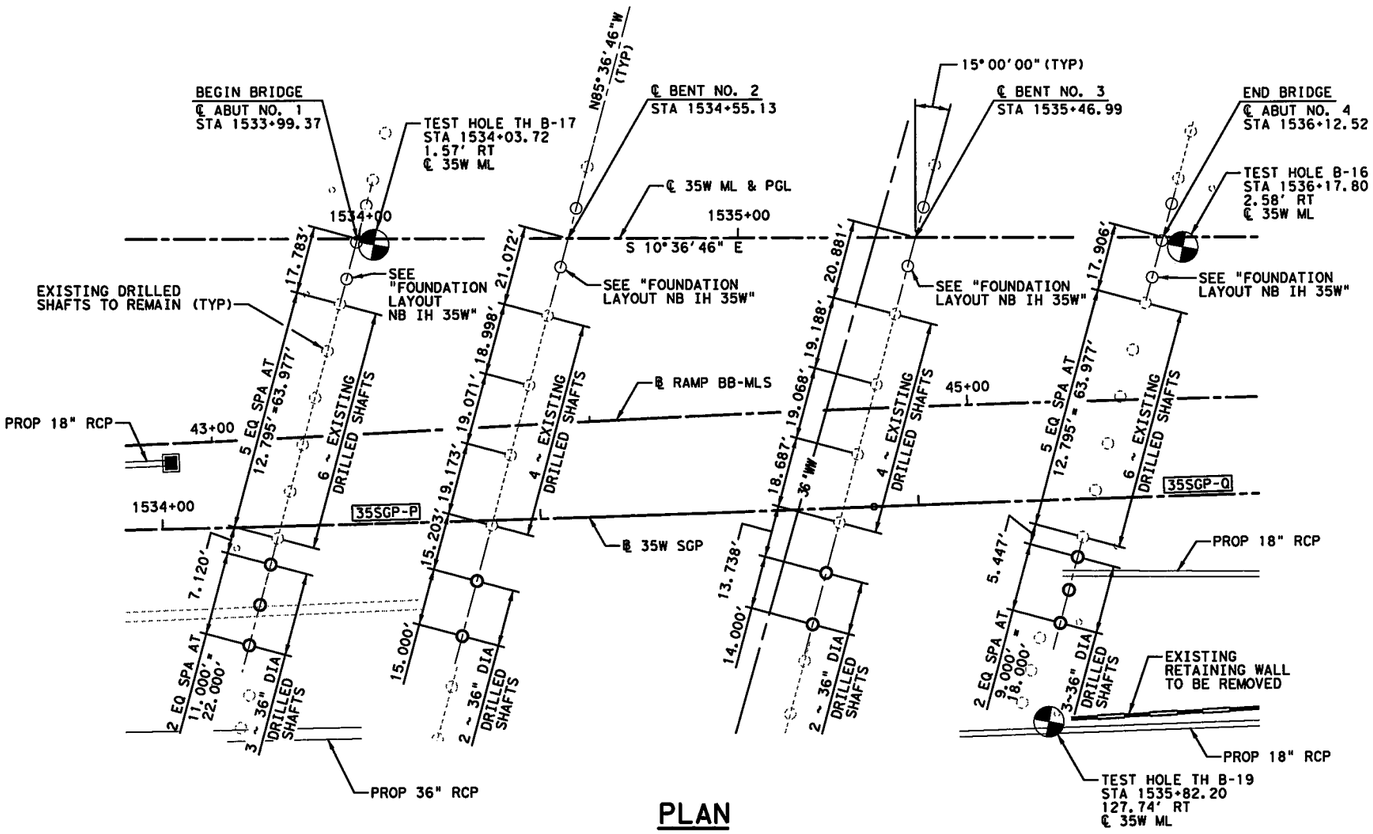

PLAN

0' 20' 40'

SCALE IN FEET

GENERAL NOTES:

1. FOR ANY TEMPORARY SHORING REQUIRED AT INTERIOR BENT LOCATIONS, FOLLOW TXDOT STANDARD SPECIFICATION ITEM 403.
2. SEE "BORING LOGS - BRIDGE" SHEETS FOR GEOTECHNICAL INFORMATION. FOR DRILLING LOG INFORMATION RELATED TO TH B-17 AND TH B-19 REFERENCE DESIGN PLANS FOR CSJ 0014-16-211 DATED FEB 1995.
3. ⊕ DENOTES TEST HOLE LOCATION.
4. CONTRACTOR TO VERIFY LOCATION OF ALL UTILITIES PRIOR TO EXCAVATION.

HORIZONTAL CURVE DATA

35SGP-P	35SGP-Q
PC STATION = 1531+60.04	PC STATION = 1535+88.26
PI STATION = 1533+74.17	PI STATION = 1538+02.39
PT STATION = 1535+88.26	PT STATION = 1540+16.47
Δ = 2° 08' 27.86" (LT)	Δ = 2° 08' 27.86" (RT)
D = 0° 30' 00.00"	D = 0° 30' 00.00"
T = 214.13'	T = 214.13'
L = 428.21'	L = 428.21'
R = 11,459.16'	R = 11,459.16'

STATE OF TEXAS
TIMOTHY J. ROSS
98465
LICENSED PROFESSIONAL ENGINEER

8/29/12

HS 20 LOADING (EXISTING)
HL 93 LOADING (WIDENING)

PESC P.E. Structural Consultants, Inc.
www.PEStructural.com
TBPE Firm No. F-1475

Texas Department of Transportation
© 2012

IH 35W FROM NORTH TARRANT PKWY TO IH 820

FOUNDATION LAYOUT

SB IH 35W

OVER BIG FOSSIL CK

SCALE: 1" = 40' SHEET 1 OF 1

DESIGN	FED.RD. DIV.NO.	FEDERAL AID PROJECT NO.		HIGHWAY NO.
TJR	6	(SEE TITLE SHEET)		IH 35W
GRAPHICS	STATE	DISTRICT	COUNTY	SHEET NO.
TLS	TEXAS	FTW	TARRANT	
CHECK	CONTROL	SECTION	JOB	1706
NRR	0014	16	255, ETC.	
CHECK				
AB				

FILENAME: S3BBR*BFC-SBML*FL*01.dgn
DRAWING DATE: 7/13/2012

SUMMARY OF ESTIMATED QUANTITIES

	BID ITEM	104 2009	416 2004	420 2042	422 2008	425 2067	428 2002	429 2007	429 2008	430 2126	430 2232	432 2002	438 2002	438 2006	450 2102
	BID ITEM DESCRIPTION	REMOVING CONC (RIPRAP)	DRILL SHAFT	CL C CONC (HPC)	REINF CONC SLAB (EXT SLAB) (HPC) (CL S)	PRESTR CONC GIRDER (TX46)	CONC SURF TREAT (CLASS II)	CNC STR REP (HORIZONTAL)	CNC STR REP (VERTICAL OR OVERHEAD)	CL C CONC FOR EXT STR (HPC)	CL S CONC FOR EXT STR (HPC)	RIPRAP (CONC)	CLEAN AND SEAL EXIST JOINTS	CLEAN AND SEAL CRACKS	RAIL (TYPE SSTR) (HPC)
	BRIDGE ELEMENT		(36 IN)	(BENT)						(ABUT)	(APPR SLAB)	(5 IN)			
		SY	LF	CY	SF	LF	SY	SF	SF	CY	CY	CY	LF	LF	LF
PHASE 1 STEP 1	2 - ABUTMENTS							2	9					4	
	2 - INTERIOR BENTS														
	1 - 213.150' PRESTRESSED CONCRETE I-GIRDER UNIT (SPANS 1-3)				3,784	423.32	542						72	130	
	PHASE 1 STEP 1 TOTAL	0	0	0.0	3,784	423.32	542	2	9	0.0	0	0	72	134	0
PHASE 1 STEP 3	2 - ABUTMENTS	151	240				128	2	9	32.0	60	21		4	
	2 - INTERIOR BENTS		76	45.3			49								
	1 - 213.150' PRESTRESSED CONCRETE I-GIRDER UNIT (SPANS 1-3)				6,039	636.89	804						72	130	237
	PHASE 1 STEP 3 TOTAL	151	316	45.3	6,039	636.89	981	2	9	32.0	60	21	72	134	237
	TOTALS	151	316	45.3	9,823	1,060.21	1,523	4	18	32.0	60	21	144	268	237

SUMMARY OF ESTIMATED QUANTITIES

	BID ITEM	454 2001	514 2065	514 2066
	BID ITEM DESCRIPTION	SEALED EXPANSION JOINT (4 IN) (SEJ-A)	PRM CON TRF BAR (SAFETY SH) (TY 1) (HPC)	PRM CON TRF BAR (SG SLP) (TY 1) (42") (HPC)
	BRIDGE ELEMENT			
		LF	LF	LF
PHASE 1 STEP 1	2 - ABUTMENTS	34		
	2 - INTERIOR BENTS			
	1 - 213.150' PRESTRESSED CONCRETE I-GIRDER UNIT (SPANS 1-3)			213
	PHASE 1 STEP 1 TOTAL	34		213
PHASE 1 STEP 3	2 - ABUTMENTS	57		
	2 - INTERIOR BENTS			
	1 - 213.150' PRESTRESSED CONCRETE I-GIRDER UNIT (SPANS 1-3)		216	
	PHASE 1 STEP 3 TOTAL	57	216	
	TOTALS	91	216	213

BEARING SEAT ELEVATIONS

		BEAM 1	BEAM 2	BEAM 3	BEAM 4	BEAM 5	BEAM 6	BEAM 7	BEAM 8
BENT 1	(FWD)	620.543	620.361	620.179	619.992	619.805	619.617	619.430	619.211
		BEAM 9	BEAM 10	BEAM 11	BEAM 12	BEAM 13	BEAM 14		
		618.963	618.715	618.467	618.200	617.933	617.624		
		BEAM 1	BEAM 2	BEAM 3	BEAM 4	BEAM 5	BEAM 6	BEAM 7	BEAM 8
BENT 2	(BK)	621.481	621.299	621.117	620.930	620.742	620.555	620.368	620.149
	(FWD)	621.328	621.146	620.964	620.777	620.590	620.403	620.216	619.997
		BEAM 9	BEAM 10	BEAM 11	BEAM 12	BEAM 13	BEAM 14		
	(BK)	619.901	619.653	619.405	619.138	618.871	618.603		
	(FWD)	619.749	619.501	619.253	618.985	618.718	618.452		
		BEAM 1	BEAM 2	BEAM 3	BEAM 4	BEAM 5	BEAM 6	BEAM 7	BEAM 8
BENT 3	(BK)	622.897	622.715	622.533	622.346	622.159	621.971	621.784	621.565
	(FWD)	623.099	622.916	622.735	622.547	622.360	622.173	621.986	621.767
		BEAM 9	BEAM 10	BEAM 11	BEAM 12	BEAM 13	BEAM 14		
	(BK)	621.317	621.069	620.821	620.554	620.287	620.106		
	(FWD)	621.519	621.271	621.023	620.808	620.593	620.309		
		BEAM 1	BEAM 2	BEAM 3	BEAM 4	BEAM 5	BEAM 6	BEAM 7	BEAM 8
BENT 4	(BK)	624.162	623.984	623.805	623.621	623.438	623.254	623.069	622.853
		BEAM 9	BEAM 10	BEAM 11	BEAM 12	BEAM 13	BEAM 14		
		622.608	622.362	622.117	621.904	621.691	621.477		

STATE OF TEXAS
TIMOTHY J. ROSS
98465
LICENSED
PROFESSIONAL ENGINEER

Timothy J. Ross
8/29/12

HS 20 LOADING (EXISTING)
HL 93 LOADING (WIDENING)

PESC
P.E. Structural Consultants, Inc.
www.PEStructural.com
TBPE Firm No. F-1475

Texas Department of Transportation
© 2012

IH 35W FROM NORTH TARRANT PKWY TO IH 820

EST. QUANTITIES AND BEARING SEAT ELEV.

SB IH 35W

OVER BIG FOSSIL CK

SCALE: NTS

SHEET 1 OF 1

DESIGN	FED.RD. DIV.NO.	FEDERAL AID PROJECT NO.		HIGHWAY NO.
TJR	6	(SEE TITLE SHEET)		IH 35W
GRAPHICS TLS	STATE	DISTRICT	COUNTY	SHEET NO.
CHECK NRR	TEXAS	FTW	TARRANT	1707
CHECK AB	CONTROL	SECTION	JOB	
	0014	16	255, ETC.	

DRAWING DATE: 7/13/2012 FILENAME: S3BBR*BFC-SBML*EQ*01.DGN

GENERAL NOTES:

1. DESIGNED ACCORDING TO AASHTO LRFD BRIDGE DESIGN SPECIFICATIONS, 5TH EDITION (2010).
2. CLASS "C" (HPC) CONCRETE STRENGTH F'C = 3,600 PSI.
3. ALL CAP AND WALL REINFORCING SHALL BE GRADE 60.
4. SEE FD STANDARD FOR ALL FOUNDATION DETAILS AND NOTES.
5. SEE RAIL STANDARD FOR RAIL ANCHORAGE IN WINGWALLS.
6. CALCULATED FOUNDATION LOADS:
   CAP DRILLED SHAFTS = 75 TONS / D.S.

① ALL DIMENSIONS TO EXISTING STRUCTURE SHALL BE VERIFIED IN THE FIELD.

② SEE "ABUTMENT NO. 1 NB IH 35W OVER BIG FOSSIL CK" FOR PHASE 1 STEP 1 ABUTMENT CAP.

③ SEE CORNER DETAILS, SHEET 2 OF 2, FOR ADDITIONAL INFORMATION.

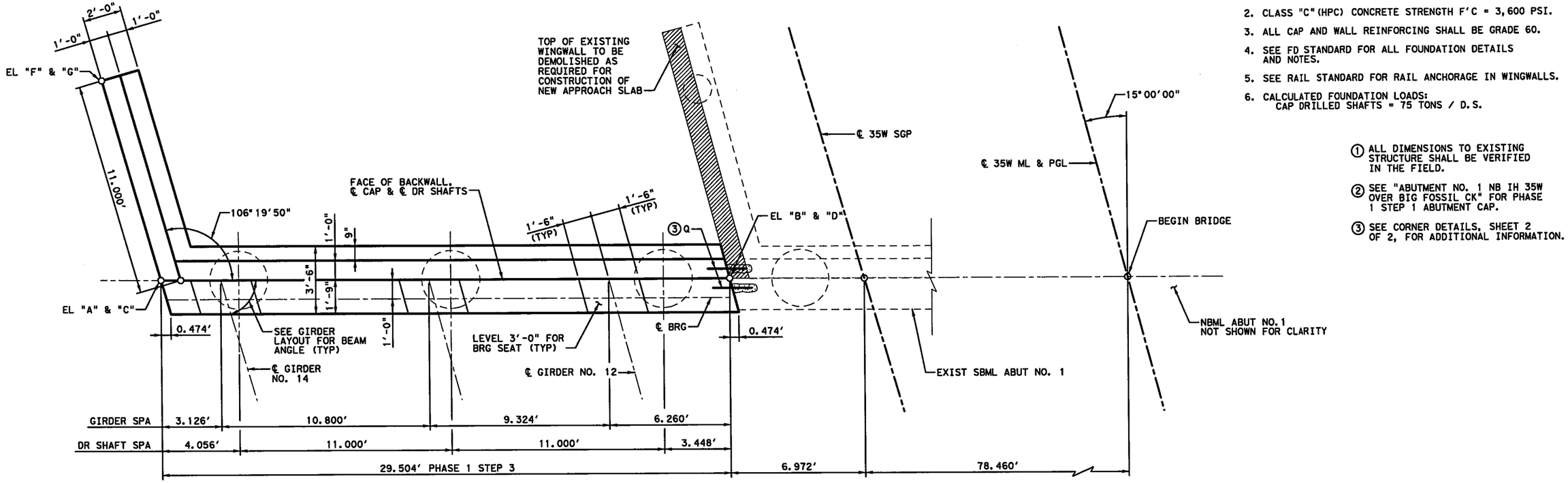

PLAN ①②

(PHASE 1 STEP 3)

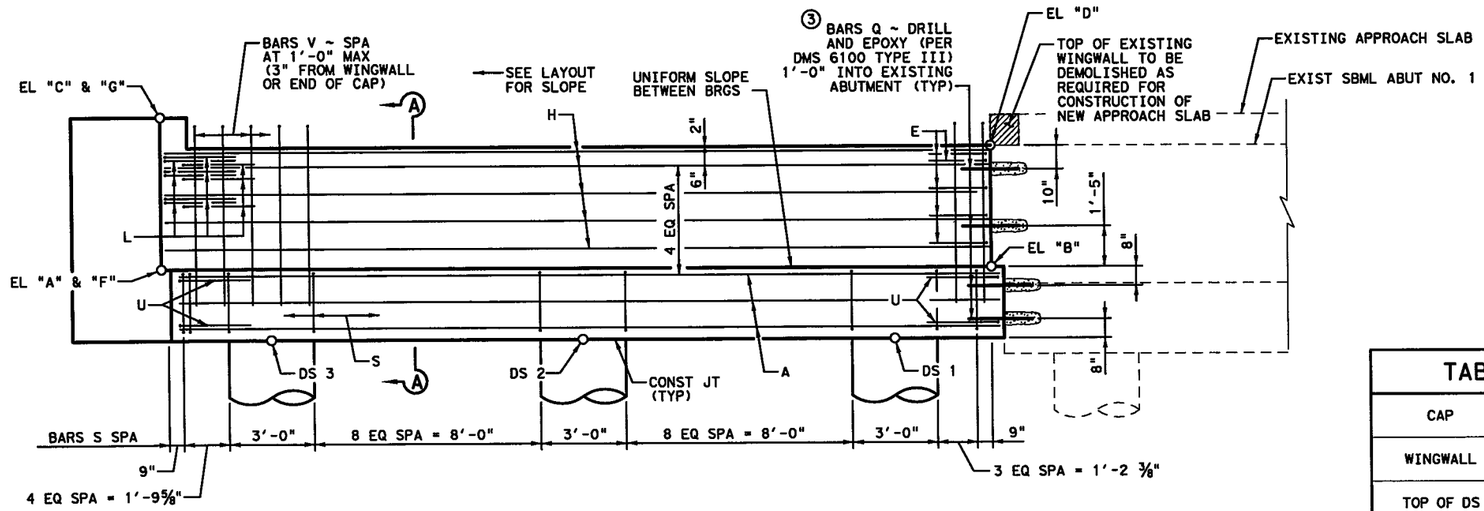

ELEVATION

(PHASE 1 STEP 3)

TABLE OF ELEVATIONS				
CAP	"A"	"B"	"C"	"D"
	617.401	618.247	622.452	622.215
WINGWALL	"F"	"G"	---	---
	617.208	622.260	---	---
TOP OF DS	DS 1	DS 2	DS 3	---
	615.647	615.331	615.016	---
SHAFT TIP	580.647	580.331	580.016	---
AS- BUILT SHAFT TIP				---

STATE OF TEXAS
TIMOTHY J. ROSS
98465
LICENSED
PROFESSIONAL ENGINEER
7/6/12

HS 20 LOADING (EXISTING)
HL 93 LOADING (WIDENING)

PESC P.E. Structural Consultants, Inc.
www.PEStructural.com
TBPE Firm No. F-1475

Texas Department of Transportation
© 2012

IH 35W FROM NORTH TARRANT PKWY TO IH 820

ABUTMENT NO. 1

SB IH 35W

OVER BIG FOSSIL CK

SCALE: NTS — SHEET 1 OF 2

DESIGN	FED. RD. DIV. NO.	FEDERAL AID PROJECT NO.		HIGHWAY NO.
TJR	6	(SEE TITLE SHEET)		IH 35W
GRAPHICS TLS	STATE	DISTRICT	COUNTY	SHEET NO.
CHECK NRR	TEXAS	FTW	TARRANT	1708
CHECK AB	CONTROL 0014	SECTION 16	JOB 255, ETC.	

FILENAME: S3BBR*BFC-SBML*AB*01.dgn

DRAWING DATE: 7/13/2012

TABLE OF ESTIMATED QUANTITIES ~ PH 1 STEP 3				
BAR	NO.	SIZE	LENGTH	WEIGHT
A	10	#11	28'-6"	1,514
H	10	#6	29'-2"	438
E	5	#6	4'-8"	35
L	9	#6	4'-0"	54
Q	6	#5	2'-0"	13
S	27	#5	11'-4"	319
U	2	#6	8'-1"	24
V	29	#5	12'-8"	383
WH1	7	#6	12'-5"	131
WH2	12	#6	10'-8"	192
WS	12	#4	7'-8"	61
WV	12	#5	12'-11"	162
REINFORCING STEEL			LB	3,326
CL C CONC (HPC) (ABUT)			CY	17.6

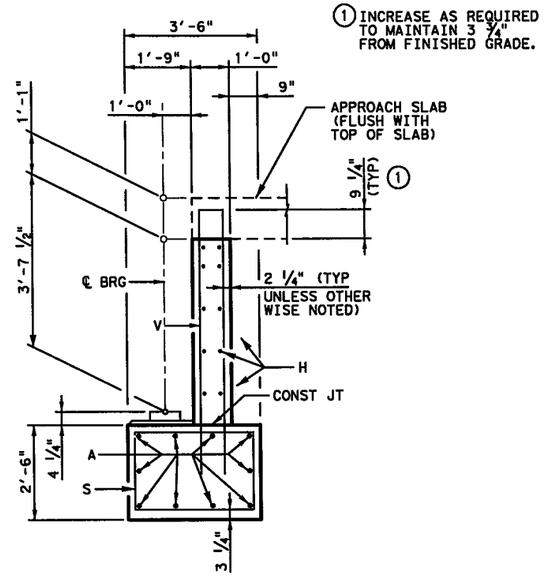

SECTION A-A

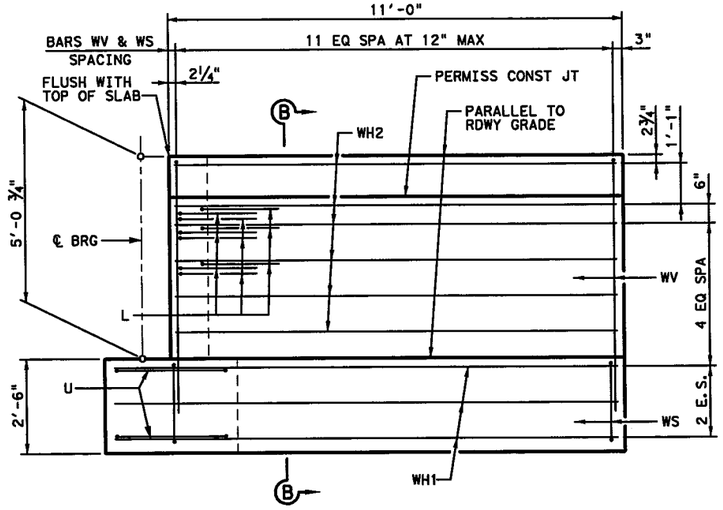

ELEVATION

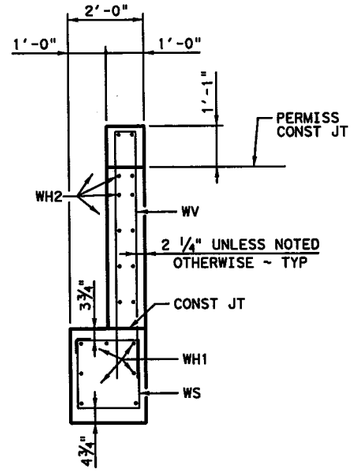

SECTION B-B

WINGWALL DETAILS

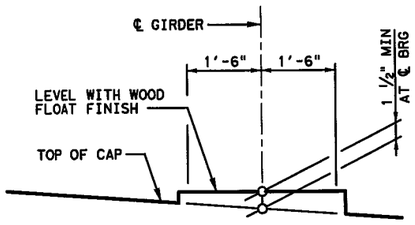

BEARING SEAT DETAIL

(BEARING SURFACE SHALL BE CLEAN AND FREE OF ALL LOOSE MATERIAL BEFORE PLACING BEARING PAD)

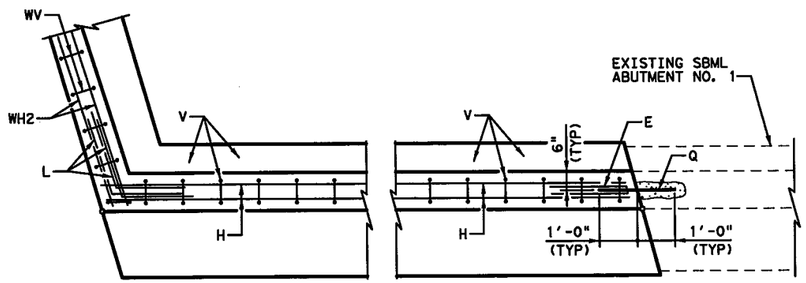

BACKWALL

THE FRONT AND BACK, BACKWALL FACES, SIDES, AND TOP, EXCEPT UNDER BEARING AREAS, SHALL BE TREATED WITH A "CLASS II, TYPE I PENETRATING CONCRETE SURFACE TREATMENT".

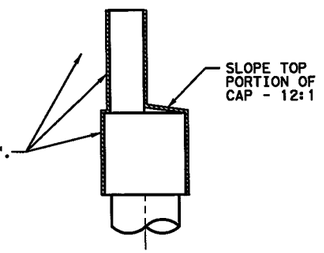

CONCRETE SURFACE TREATMENT DETAIL FOR ABUTMENT

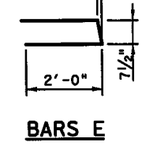

BARS E

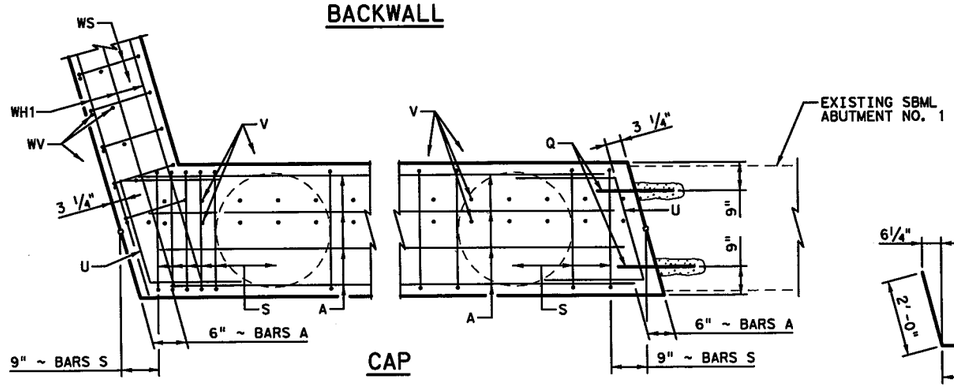

CAP

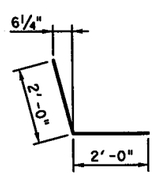

BARS L

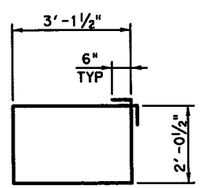

BARS S

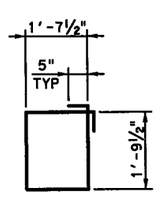

BARS WS

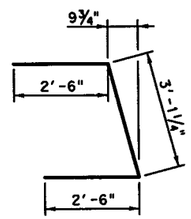

BARS U

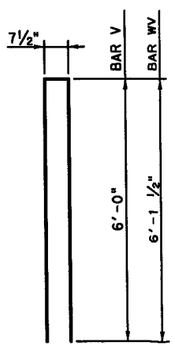

BARS V & WV

CORNER DETAILS

HS 20 LOADING (EXISTING)
HL 93 LOADING (WIDENING)

PESC P.E. Structural Consultants, Inc.
www.PEStructural.com
TBPE Firm No. F-1475

Texas Department of Transportation
© 2012

IH 35W FROM NORTH TARRANT PKWY TO IH 820

ABUTMENT NO. 1

SB IH 35W

OVER BIG FOSSIL CK

SCALE: NTS — SHEET 2 OF 2

DESIGN	FED.RD. DIV.NO.	FEDERAL AID PROJECT NO.		HIGHWAY NO.
TJR	6	(SEE TITLE SHEET)		IH 35W
GRAPHICS TLS	STATE	DISTRICT	COUNTY	SHEET NO.
CHECK NRR	TEXAS	FTW	TARRANT	1709
CHECK AB	CONTROL	SECTION	JOB	
	0014	16	255, ETC.	

STATE OF TEXAS — TIMOTHY J. ROSS — 98465 — LICENSED PROFESSIONAL ENGINEER — 7/6/12

FILENAME: S38BR*BFC-SBML*AB*02.dgn
DRAWING DATE: 7/13/2012

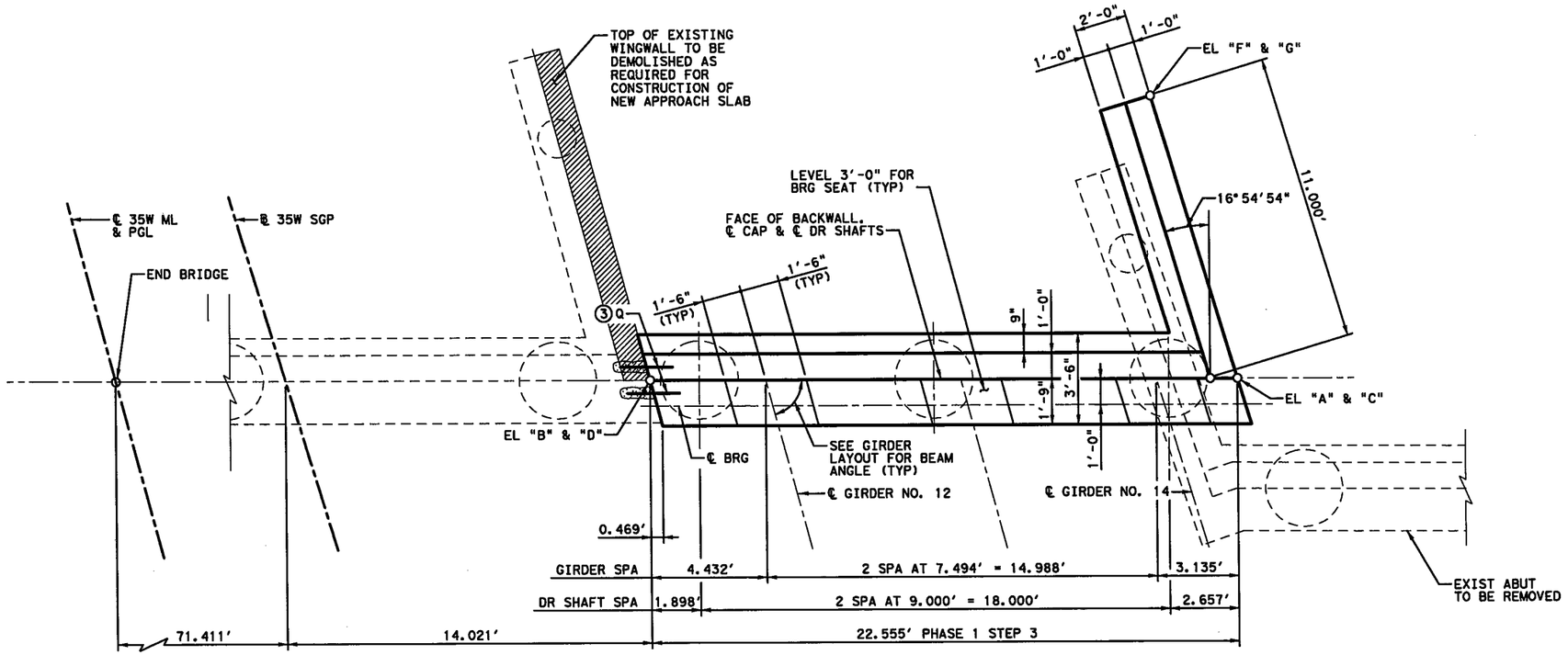

PLAN ①②

(PHASE 1 STEP 3)

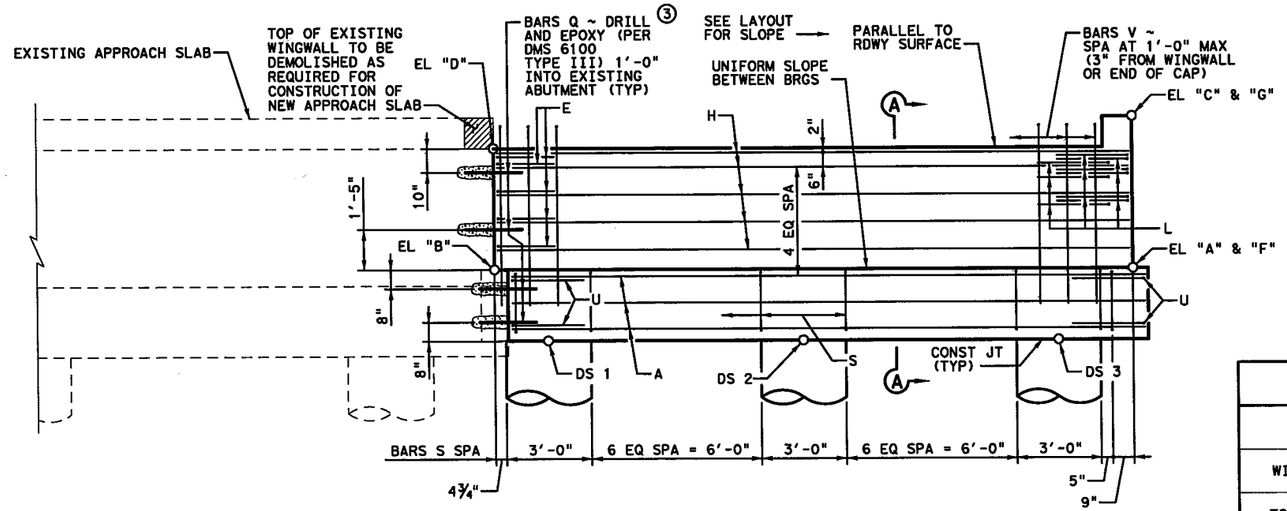

ELEVATION

(PHASE 1 STEP 3)

GENERAL NOTES:

1. DESIGNED ACCORDING TO AASHTO LRFD BRIDGE DESIGN SPECIFICATIONS, 5TH EDITION (2010).
2. CLASS "C" (HPC) CONCRETE STRENGTH F'C = 3,600 PSI.
3. ALL CAP AND WALL REINFORCING SHALL BE GRADE 60.
4. SEE FD STANDARD FOR ALL FOUNDATION DETAILS AND NOTES.
5. SEE RAIL STANDARD FOR RAIL ANCHORAGE IN WINGWALLS.
6. CALCULATED FOUNDATION LOADS: CAP DRILLED SHAFTS = 65 TONS / D.S.

① ALL DIMENSIONS TO EXISTING STRUCTURE SHALL BE VERIFIED IN THE FIELD.

② SEE "ABUTMENT NO. 4 NB IH 35W OVER BIG FOSSIL CK" FOR PHASE 1 STEP 1 ABUTMENT CAP.

③ SEE CORNER DETAILS, SHEET 2 OF 2, FOR ADDITIONAL INFORMATION.

TABLE OF ELEVATIONS

CAP	"A"	"B"	"C"	"D"
	621.272	621.913	626.364	625.922
WINGWALL	"F"	"G"	---	---
	621.466	626.559	---	---
TOP OF DS	DS 1	DS 2	DS 3	---
	619.358	619.102	618.846	---
SHAFT TIP	574.358	574.102	573.846	---
AS-BUILT SHAFT TIP				---

STATE OF TEXAS
TIMOTHY J. ROSS
98465
LICENSED
PROFESSIONAL ENGINEER
7/6/12

HS 20 LOADING (EXISTING)
HL 93 LOADING (WIDENING)

PESC P.E. Structural Consultants, Inc.
www.PEStructural.com
TBPE Firm No. F-1475

Texas Department of Transportation
© 2012

IH 35W FROM NORTH TARRANT PKWY TO IH 820

ABUTMENT NO. 4

SB IH 35W

OVER BIG FOSSIL CK

SCALE: NTS — SHEET 1 OF 2

DESIGN	FED. RD. DIV. NO.	FEDERAL AID PROJECT NO.		HIGHWAY NO.
TJR	6	(SEE TITLE SHEET)		IH 35W
GRAPHICS TLS	STATE	DISTRICT	COUNTY	SHEET NO.
CHECK NRR	TEXAS	FTW	TARRANT	1710
CHECK AB	CONTROL	SECTION	JOB	
	0014	16	255, ETC.	

FILENAME: S3BBR*BFC-SBML*AB*03.dgn
DRAWING DATE: 7/13/2012

TABLE OF ESTIMATED QUANTITIES ~ PH 1 STEP 3				
BAR	NO.	SIZE	LENGTH	WEIGHT
A	10	#11	21′-7"	1,147
H	10	#6	22′-3"	334
E	5	#6	4′-8"	35
L	9	#6	4′-0"	54
Q	6	#5	2′-0"	13
S	17	#5	11′-4"	201
U	2	#6	8′-1"	24
V	23	#5	12′-8"	304
WH1	7	#6	12′-5"	131
WH2	12	#6	10′-8"	192
WS	12	#4	7′-8"	61
WV	12	#5	12′-11"	162
REINFORCING STEEL			LB	2,658
CL C CONC (HPC) (ABUT)			CY	14.4

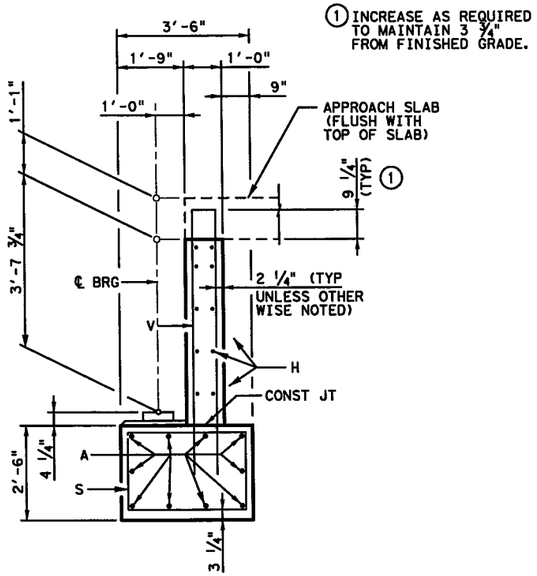

① INCREASE AS REQUIRED TO MAINTAIN 3 3/4" FROM FINISHED GRADE.

SECTION A-A

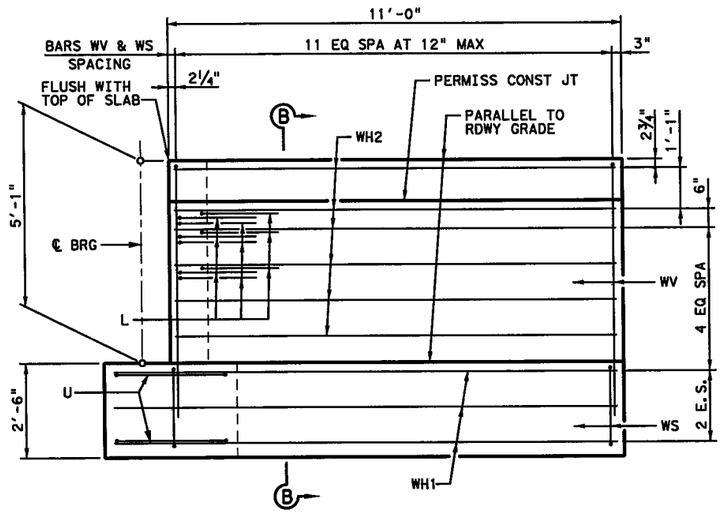

ELEVATION

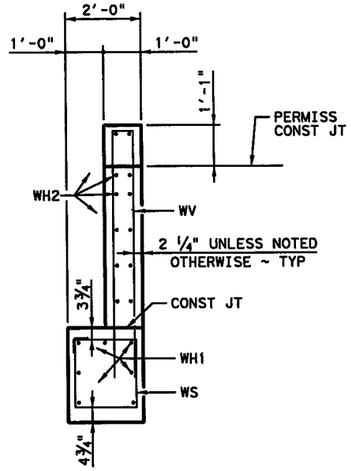

SECTION B-B

WINGWALL DETAILS

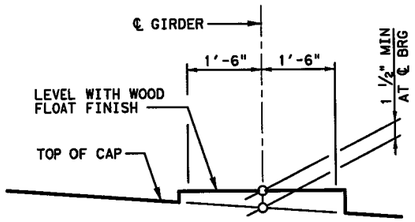

BEARING SEAT DETAIL

(BEARING SURFACE SHALL BE CLEAN AND FREE OF ALL LOOSE MATERIAL BEFORE PLACING BEARING PAD)

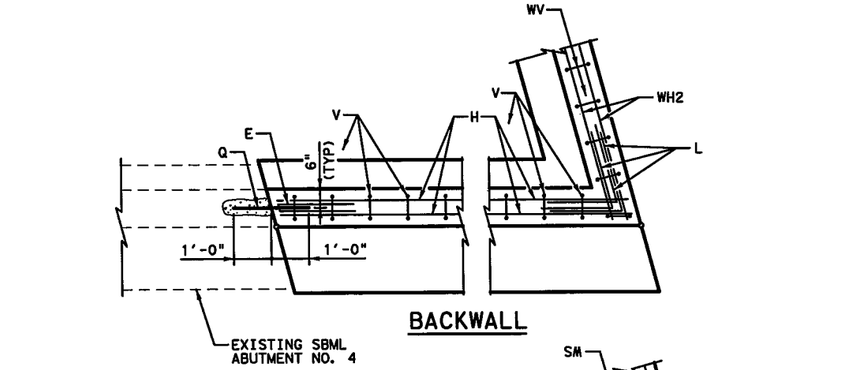

BACKWALL

CAP

CORNER DETAILS

THE FRONT AND BACK, BACKWALL FACES, SIDES, AND TOP, EXCEPT UNDER BEARING AREAS, SHALL BE TREATED WITH A "CLASS II, TYPE I PENETRATING CONCRETE SURFACE TREATMENT".

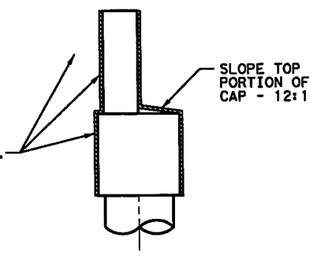

CONCRETE SURFACE TREATMENT DETAIL FOR ABUTMENT

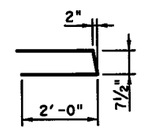

BARS E

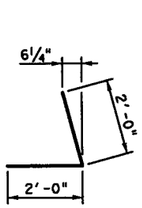

BARS L

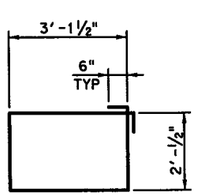

BARS S

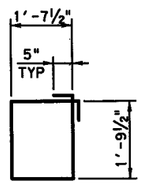

BARS WS

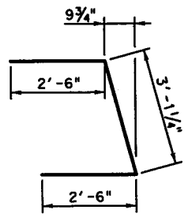

BARS U

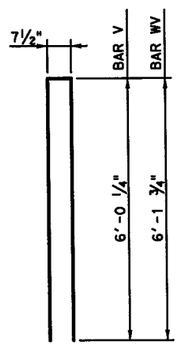

BARS V & WV

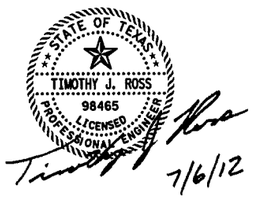

HS 20 LOADING (EXISTING)
HL 93 LOADING (WIDENING)

PESC P.E. Structural Consultants, Inc.
www.PEStructural.com
TBPE Firm No. F-1475

Texas Department of Transportation
© 2012

IH 35W FROM NORTH TARRANT PKWY TO IH 820

ABUTMENT NO. 4

SB IH 35W

OVER BIG FOSSIL CK

SCALE: NTS

SHEET 2 OF 2

DESIGN	FED.RD. DIV. NO.	FEDERAL AID PROJECT NO.		HIGHWAY NO.
TJR	6	(SEE TITLE SHEET)		IH 35W
GRAPHICS TLS	STATE	DISTRICT	COUNTY	SHEET NO.
CHECK NRR	TEXAS	FTW	TARRANT	1711
CHECK AB	CONTROL 0014	SECTION 16	JOB 255, ETC.	

FILENAME: S3BBR*BFC-SBML*AB*04.dgn

DRAWING DATE: 7/13/2012

TABLE OF ESTIMATED QUANTITIES ~ PHASE 1 STEP 3 ④

BENT	COLUMN HEIGHT "H"	BAR V 20 - #9		BAR Z 2 - #3 SPIRAL		TOTAL REINFORCING STEEL	CL C CONC (COLUMN) (HPC) (2 COLS)
NO.	(FT)	LENGTH	WEIGHT (LB)	LENGTH	WEIGHT (LB)	WEIGHT (LB)	(CY)
2	22	24' - 3"	1,649	362' - 0"	272	1,921	11.6

TOTAL ESTIMATED QUANTITIES ~ PHASE 1 STEP 3 ③

BAR	NO.	SIZE	LENGTH	WEIGHT
A	5	#11	22'-6"	598
B	5	#11	21'-0"	558
D	4	1 1/4" D	1'-8"	28
E1	9	#4	5'-6" AVG	33
E2	12	#4	4'-3" AVG	34
S	21	#5	13'-6"	296
T	10	#5	21'-0"	219
U	2	#5	9'-8"	20
REINFORCING STEEL			LB	1,786
CL C CONC (HPC) (CAP)			CY	10.3

③ ADJUST BARS V LENGTH BY 1 FT AND BARS Z LENGTH BY 15.7398 FT FOR EACH LINEAR FOOT OF VARIATION IN "H" VALUE.

④ ADJUST REINFORCING STEEL TOTAL BY 80 LBS AND CLASS "C" CONCRETE TOTAL BY 0.5236 CY FOR EACH LINEAR FOOT OF VARIATION IN "H" VALUE.

GENERAL NOTES:

1. DESIGNED ACCORDING TO AASHTO LRFD BRIDGE DESIGN SPECIFICATIONS, 5TH EDITION (2010).
2. CLASS "C"(HPC) CONCRETE STRENGTH F'C = 3,600 PSI.
3. ALL CAP REINFORCING SHALL BE GRADE 60. COLUMN AND DRILLED SHAFT REINFORCING MAY BE GRADE 40.
4. SEE FD STANDARD FOR ALL FOUNDATION DETAILS AND NOTES.
5. CALCULATED FOUNDATION LOAD: 210 TONS / D.S.

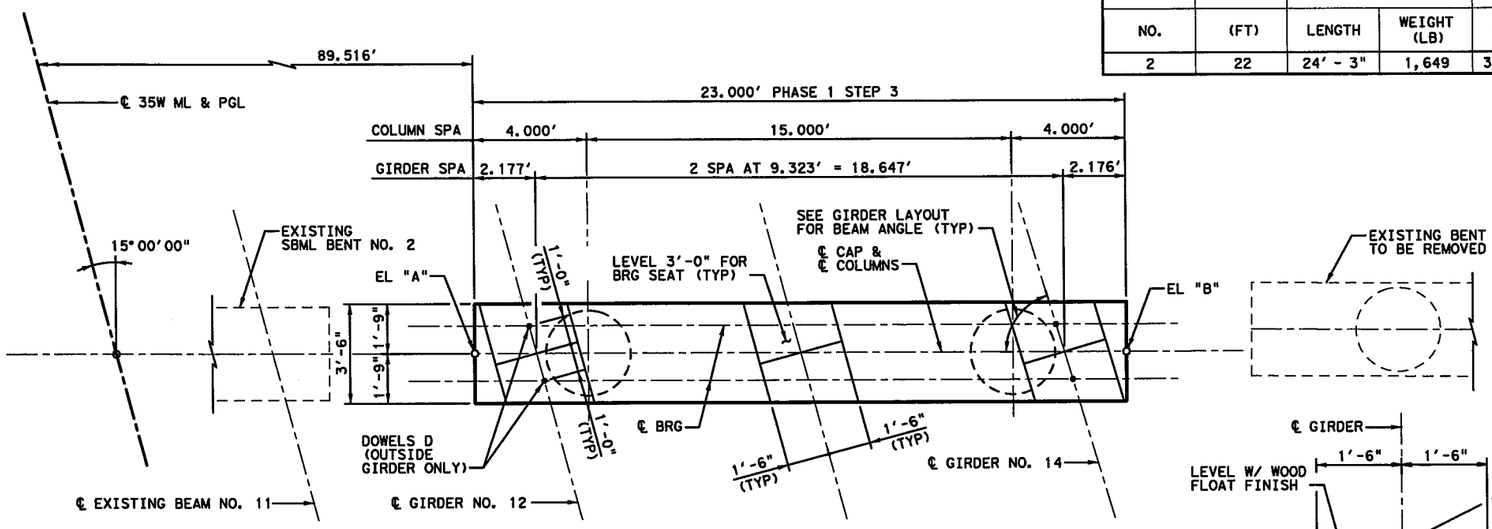

PLAN ①
(PHASE 1 STEP 3)

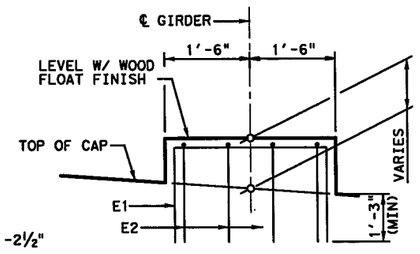

ELEVATION

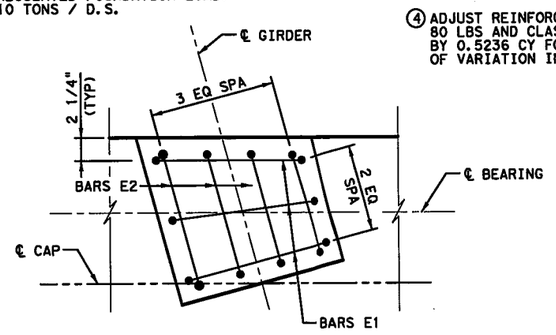

PLAN

① SEE "INTERIOR BENT NO. 2 & 3 NB IH 35W OVER BIG FOSSIL CK" FOR PHASE 1 STEP 1 BENT CAP.

② MEASURED PARALLEL TO TOP OF CAP.

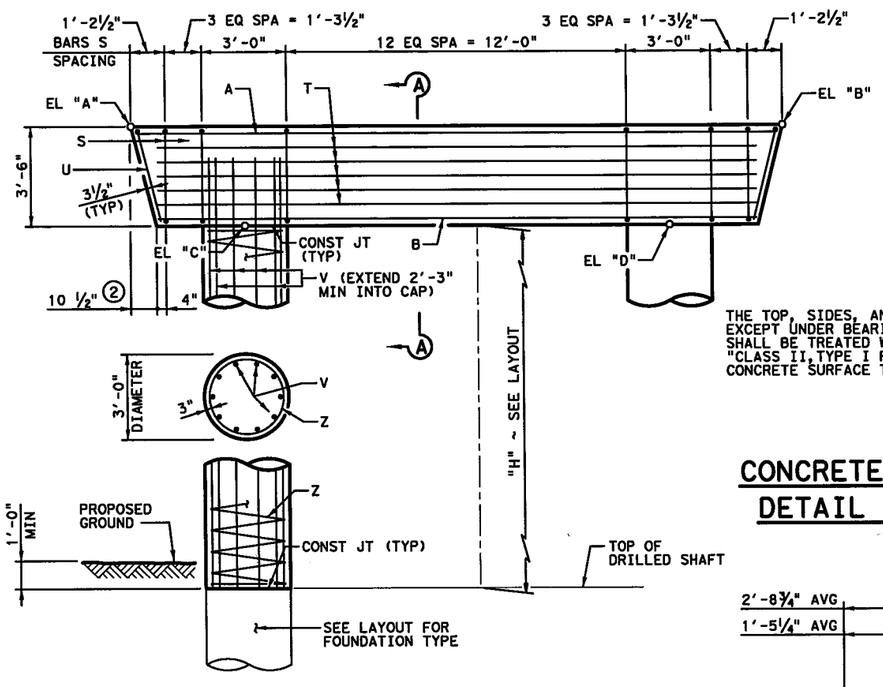

ELEVATION
(PHASE 1 STEP 3)

TOP OF DRILLED SHAFT ELEVATIONS WERE ESTIMATED BASED ON GROUND ELEVATION INFORMATION AVAILABLE AT THE TIME OF DESIGN. CONTRACTOR SHALL CONFIRM THESE ELEVATIONS PRIOR TO DRILLING.

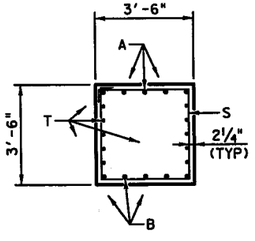

SECTION A-A

TABLE OF ELEVATIONS

"A"	"B"	"C"	"D"
618.914	618.256	615.298	614.869
TOP OF DS		DS 1	DS 2
		593.793	594.005
SHAFT TIP		573.793	574.005
AS-BUILT SHAFT TIP			

BEARING SEAT DETAIL
(HEIGHTS OVER 3")

(BEARING SURFACE MUST BE CLEAN AND FREE OF ALL LOOSE MATERIAL BEFORE PLACING BEARING PAD.)

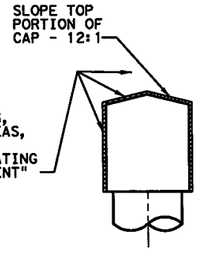

CONCRETE SURFACE TREATMENT DETAIL FOR INTERIOR BENT

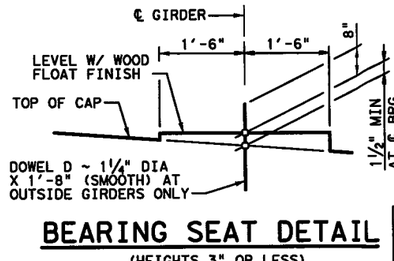

BEARING SEAT DETAIL
(HEIGHTS 3" OR LESS)

(BEARING SURFACE MUST BE CLEAN AND FREE OF ALL LOOSE MATERIAL BEFORE PLACING BEARING PAD.)

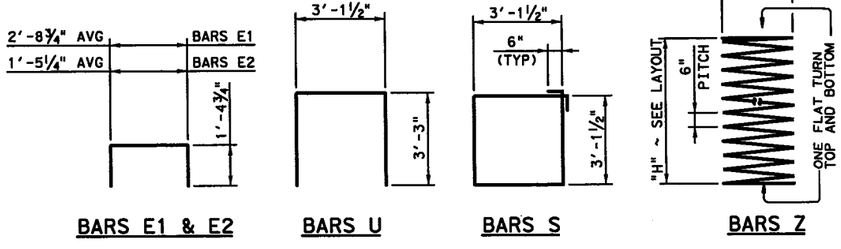

BARS E1 & E2 | BARS U | BARS S | BARS Z

HS 20 LOADING (EXISTING)
HL 93 LOADING (WIDENING)

STATE OF TEXAS
TIMOTHY J. ROSS
98465
LICENSED
PROFESSIONAL ENGINEER
7/6/12

P.E. Structural Consultants, Inc.
www.PEStructural.com
TBPE Firm No. F-1475

Texas Department of Transportation
© 2012

IH 35W FROM NORTH TARRANT PKWY TO IH 820

INTERIOR BENT NO. 2
SB IH 35W
OVER BIG FOSSIL CK

SCALE: NTS — SHEET 1 OF 1

DESIGN	FED.RD. DIV.NO.	FEDERAL AID PROJECT NO.		HIGHWAY NO.
TJR	6	(SEE TITLE SHEET)		IH 35W
GRAPHICS TLS	STATE	DISTRICT	COUNTY	SHEET NO.
CHECK NRR	TEXAS	FTW	TARRANT	1712
CHECK AB	CONTROL	SECTION	JOB	
	0014	16	255, ETC.	

FILENAME: S3BBR*BFC-SBML*IB*01.dgn
DRAWING DATE: 7/13/2012

TOP OF DRILLED SHAFT ELEVATIONS WERE ESTIMATED BASED ON GROUND ELEVATION INFORMATION AVAILABLE AT THE TIME OF DESIGN. CONTRACTOR SHALL CONFIRM THESE ELEVATIONS PRIOR TO DRILLING.

TABLE OF ELEVATIONS

"A"	"B"	"C"	"D"
620.555	619.924	616.939	616.538
TOP OF DS		DS 1	DS 2
		590.904	591.366
SHAFT TIP		572.904	573.366
AS-BUILT SHAFT TIP			

TABLE OF ESTIMATED QUANTITIES ~ PHASE 1 STEP 3 ④

BENT	COLUMN HEIGHT "H"	BAR V 20 - #9		BAR Z 2 - #3 SPIRAL		TOTAL REINFORCING STEEL	CL C CONC (COLUMN) (HPC) (2 COLS)
NO.	(FT)	LENGTH	WEIGHT (LB)	LENGTH	WEIGHT (LB)	WEIGHT (LB)	(CY)
3	26	28' - 3"	1,921	424' - 11"	320	2,241	11.6

TOTAL ESTIMATED QUANTITIES ~ PHASE 1 STEP 3 ③

TABLE OF ESTIMATED QUANTITIES ~ PH 1 STEP 3

BAR	NO.	SIZE	LENGTH	WEIGHT
A	5	#11	21'-6"	571
B	5	#11	20'-0"	531
D	4	1 1/4" D	1'-8"	28
E1	9	#4	5'-7" AVG	34
E2	12	#4	4'-3" AVG	34
S	20	#5	13'-6"	282
T	10	#5	20'-0"	209
U	2	#5	9'-8"	20
REINFORCING STEEL			LB	1,709
CL C CONC (HPC) (CAP)			CY	9.8

③ ADJUST BARS V LENGTH BY 1 FT AND BARS Z LENGTH BY 15.7398 FT FOR EACH LINEAR FOOT OF VARIATION IN "H" VALUE.

④ ADJUST REINFORCING STEEL TOTAL BY 80 LBS AND CLASS "C" CONCRETE TOTAL BY 0.5236 CY FOR EACH LINEAR FOOT OF VARIATION IN "H" VALUE.

GENERAL NOTES:

1. DESIGNED ACCORDING TO AASHTO LRFD BRIDGE DESIGN SPECIFICATIONS, 5TH EDITION (2010).
2. CLASS "C"(HPC) CONCRETE STRENGTH F'C = 3,600 PSI.
3. ALL CAP REINFORCING SHALL BE GRADE 60. COLUMN AND DRILLED SHAFT REINFORCING MAY BE GRADE 40.
4. SEE FD STANDARD FOR ALL FOUNDATION DETAILS AND NOTES.
5. CALCULATED FOUNDATION LOAD: 215 TONS / D.S.

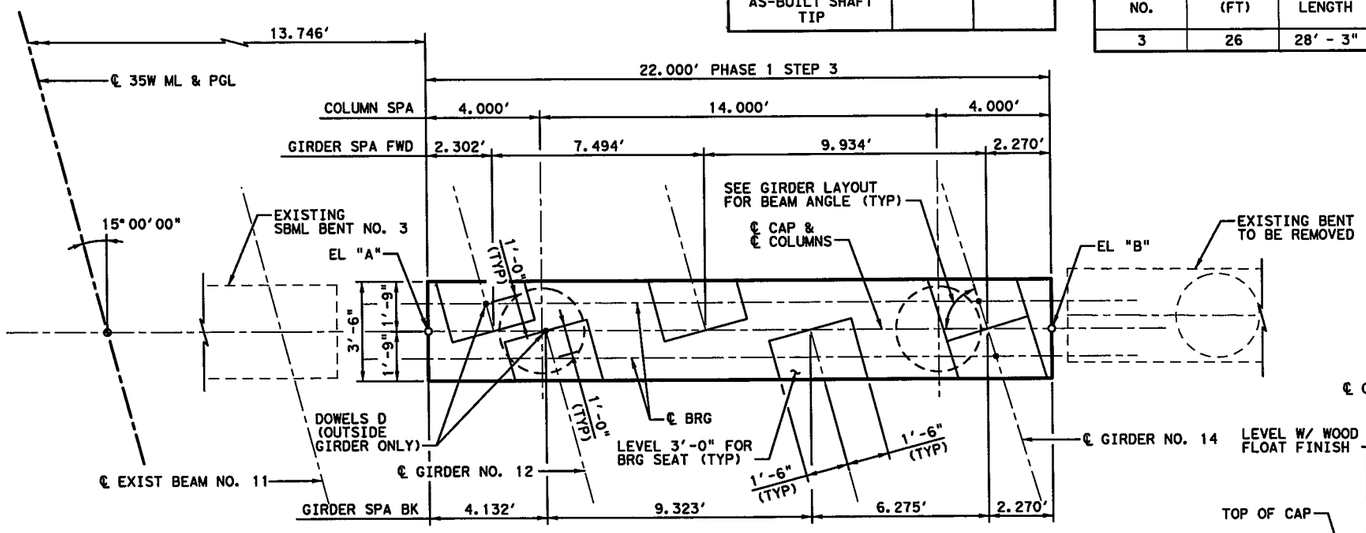

PLAN ①

(PHASE 1 STEP 3)

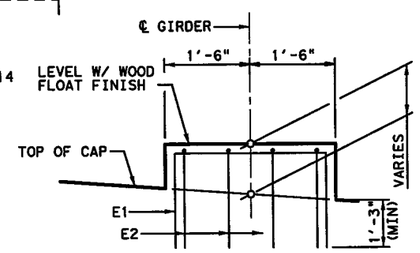

ELEVATION

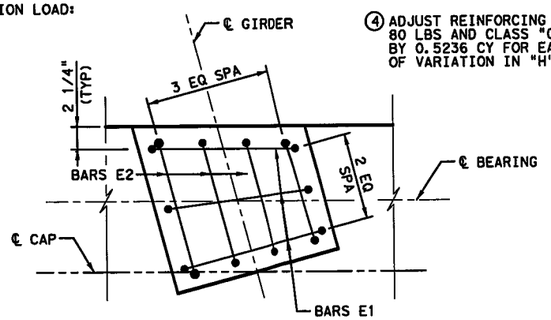

PLAN

BEARING SEAT DETAIL

(HEIGHTS OVER 3")

(BEARING SURFACE MUST BE CLEAN AND FREE OF ALL LOOSE MATERIAL BEFORE PLACING BEARING PAD.)

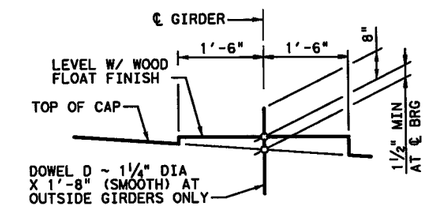

BEARING SEAT DETAIL

(HEIGHTS 3" OR LESS)

(BEARING SURFACE MUST BE CLEAN AND FREE OF ALL LOOSE MATERIAL BEFORE PLACING BEARING PAD.)

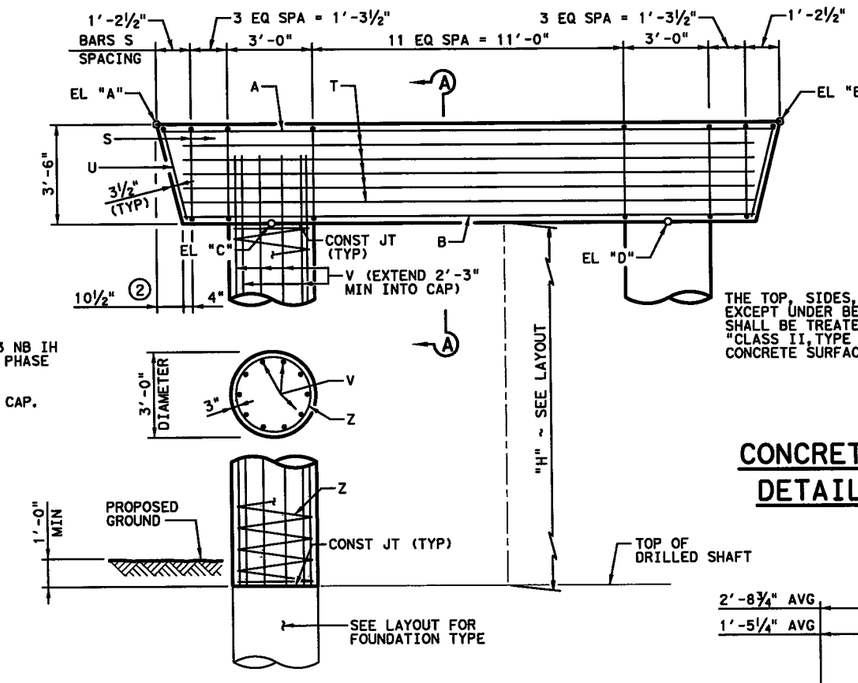

ELEVATION

(PHASE 1 STEP 3)

① SEE "INTERIOR BENT NO. 2 & 3 NB IH 35W OVER BIG FOSSIL CK" FOR PHASE 1 STEP 1 BENT CAP.

② MEASURED PARALLEL TO TOP OF CAP.

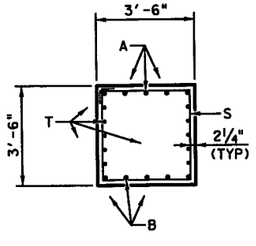

SECTION A-A

SLOPE TOP PORTION OF CAP - 12:1

THE TOP, SIDES, AND ENDS, EXCEPT UNDER BEARING AREAS, SHALL BE TREATED WITH A "CLASS II, TYPE I PENETRATING CONCRETE SURFACE TREATMENT"

CONCRETE SURFACE TREATMENT DETAIL FOR INTERIOR BENT

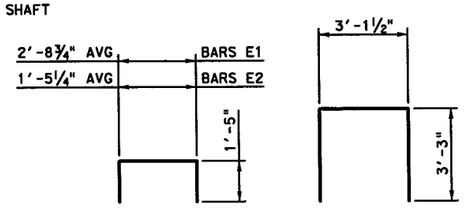

BARS E1 & E2 | BARS U | BARS S | BARS Z

HS 20 LOADING (EXISTING)
HL 93 LOADING (WIDENING)

P.E. Structural Consultants, Inc.
www.PEStructural.com
TBPE Firm No. F-1475

Texas Department of Transportation

© 2012

IH 35W FROM NORTH TARRANT PKWY TO IH 820

INTERIOR BENT NO. 3

SB IH 35W

OVER BIG FOSSIL CK

SCALE: NTS — SHEET 1 OF 1

DESIGN	FED. RD. DIV. NO.	FEDERAL AID PROJECT NO.		HIGHWAY NO.
TJR	6	(SEE TITLE SHEET)		IH 35W
GRAPHICS TLS	STATE	DISTRICT	COUNTY	SHEET NO.
CHECK NRR	TEXAS	FTW	TARRANT	1713
CHECK AB	CONTROL	SECTION	JOB	
	0014	16	255, ETC.	

STATE OF TEXAS — TIMOTHY J. ROSS — 98465 — LICENSED PROFESSIONAL ENGINEER

7/6/12

FILENAME: S3BBR*BFC-SBML*IB*02.dgn

DRAWING DATE: 7/13/2012

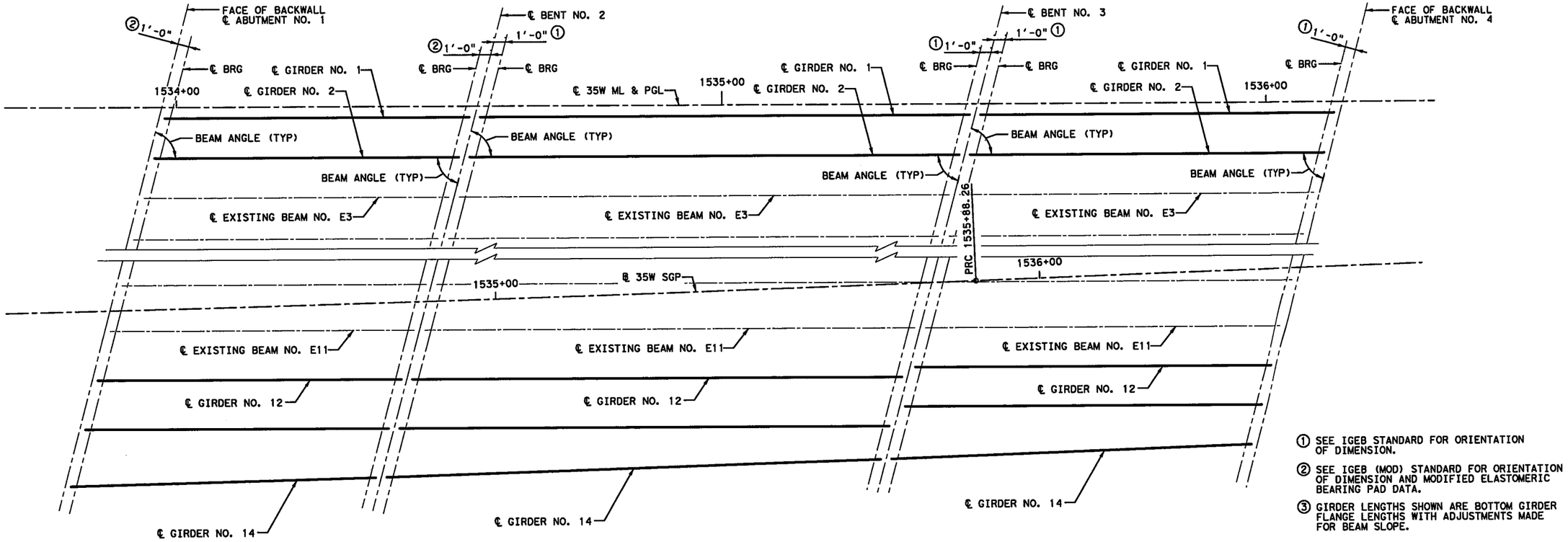

① SEE IGEB STANDARD FOR ORIENTATION OF DIMENSION.

② SEE IGEB (MOD) STANDARD FOR ORIENTATION OF DIMENSION AND MODIFIED ELASTOMERIC BEARING PAD DATA.

③ GIRDER LENGTHS SHOWN ARE BOTTOM GIRDER FLANGE LENGTHS WITH ADJUSTMENTS MADE FOR BEAM SLOPE.

SPAN 1
(TX46 GIRDERS)

SPAN 2
(TX46 GIRDERS)

SPAN 3
(TX46 GIRDERS)

BENT REPORT

ABUT NO. 1 (S 85 36 46.33 E)
DISTANCE BETWEEN STATION LINE AND BEAM 1 1.898 R

		BEAM SPAC. (C.L. BENT)	BEAM ANGLE D	M	S
SPAN 1	BEAM 1	0.000	75	0	0
	BEAM 2	7.635	75	0	0
	BEAM 12	9.324	75	0	0
	BEAM 13	9.323	75	0	0
	BEAM 14	10.794	73	33	2
	TOTAL	109.912			

BENT NO. 2 (S 85 36 46.33 E)
DISTANCE BETWEEN STATION LINE AND BEAM 1 1.898 R

		BEAM SPAC. (C.L. BENT)	BEAM ANGLE D	M	S
SPAN 1	BEAM 1	0.000	75	0	0
	BEAM 2	7.635	75	0	0
	BEAM 12	9.324	75	0	0
	BEAM 13	9.323	75	0	0
	BEAM 14	9.323	73	33	2
	TOTAL	108.442			

BENT NO. 2 (S 85 36 46.33 E)
DISTANCE BETWEEN STATION LINE AND BEAM 1 1.898 R

		BEAM SPAC. (C.L. BENT)	BEAM ANGLE D	M	S
SPAN 2	BEAM 1	0.000	75	0	0
	BEAM 2	7.635	75	0	0
	BEAM 12	9.324	75	0	0
	BEAM 13	9.323	75	0	0
	BEAM 14	9.323	73	10	46
	TOTAL	108.442			

BENT NO. 3 (S 85 36 46.33 E)
DISTANCE BETWEEN STATION LINE AND BEAM 1 1.898 R

		BEAM SPAC. (C.L. BENT)	BEAM ANGLE D	M	S
SPAN 2	BEAM 1	0.000	75	0	0
	BEAM 2	7.635	75	0	0
	BEAM 12	9.324	75	0	0
	BEAM 13	9.323	75	0	0
	BEAM 14	6.275	73	10	46
	TOTAL	105.394			

BENT NO. 3 (S 85 36 46.33 E)
DISTANCE BETWEEN STATION LINE AND BEAM 1 1.898 R

		BEAM SPAC. (C.L. BENT)	BEAM ANGLE D	M	S
SPAN 3	BEAM 1	0.000	75	0	0
	BEAM 2	7.635	75	0	0
	BEAM 12	7.494	75	0	0
	BEAM 13	7.494	75	0	0
	BEAM 14	9.934	72	57	32
	TOTAL	105.394			

ABUT NO. 4 (S 85 36 46.33 E)
DISTANCE BETWEEN STATION LINE AND BEAM 1 1.898 R

		BEAM SPAC. (C.L. BENT)	BEAM ANGLE D	M	S
SPAN 3	BEAM 1	0.000	75	0	0
	BEAM 2	7.635	75	0	0
	BEAM 12	7.494	75	0	0
	BEAM 13	7.494	75	0	0
	BEAM 14	7.494	72	57	32
	TOTAL	102.953			

BEAM REPORT

BEAM REPORT, SPAN 1

	HORIZONTAL DISTANCE C-C BENT	C-C BRG.	TRUE DISTANCE BOT. BM. FLG. ③	BEAM SLOPE
BEAM 1	55.760	53.725	55.26	0.0175
BEAM 2	55.760	53.725	55.26	0.0175
BEAM 12	55.760	53.725	55.26	0.0175
BEAM 13	55.760	53.725	55.26	0.0175
BEAM 14	56.159	54.116	55.66	0.0181

BEAM REPORT, SPAN 2

	HORIZONTAL DISTANCE C-C BENT	C-C BRG.	TRUE DISTANCE BOT. BM. FLG. ③	BEAM SLOPE
BEAM 1	91.860	89.860	91.37	0.0175
BEAM 2	91.860	89.860	91.37	0.0175
BEAM 12	91.860	89.860	91.37	0.0175
BEAM 13	91.860	89.860	91.37	0.0175
BEAM 14	92.696	90.696	92.21	0.0182

BEAM REPORT, SPAN 3

	HORIZONTAL DISTANCE C-C BENT	C-C BRG.	TRUE DISTANCE BOT. BM. FLG. ③	BEAM SLOPE
BEAM 1	65.530	63.495	65.03	0.0167
BEAM 2	65.530	63.495	65.03	0.0168
BEAM 12	65.530	63.495	65.03	0.0173
BEAM 13	65.530	63.495	65.03	0.0173
BEAM 14	66.204	64.158	65.70	0.0182

HS 20 LOADING (EXISTING)
HL 93 LOADING (WIDENING)

PESC
P.E. Structural Consultants, Inc.
www.PEStructural.com
TBPE Firm No. F-1475

Texas Department of Transportation
© 2012

IH 35W FROM NORTH TARRANT PKWY TO IH 820

GIRDER LAYOUT (SPANS 1-3)

SB IH 35W
OVER BIG FOSSIL CK

SCALE: NTS SHEET 1 OF 1

DESIGN	FED.RD. DIV.NO.	FEDERAL AID PROJECT NO.		HIGHWAY NO.
TJR	6	(SEE TITLE SHEET)		IH 35W
GRAPHICS TLS	STATE	DISTRICT	COUNTY	SHEET NO.
CHECK NRR	TEXAS	FTW	TARRANT	1714
CHECK AB	CONTROL	SECTION	JOB	
	0014	16	255, ETC.	

DRAWING DATE: 7/13/2012 FILENAME: S3BBR#BFC-SBML#GF#01.dgn

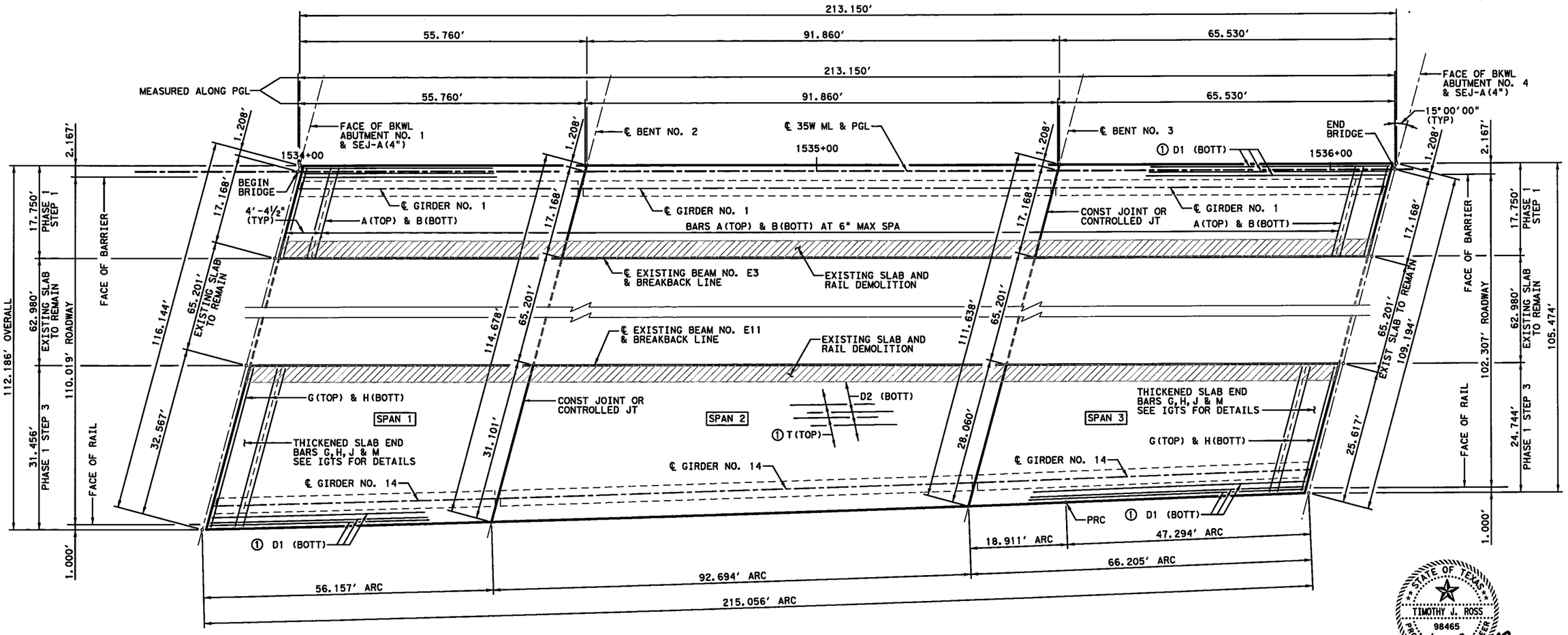

① 2" END COVER ON BARS D1 AND T.

PLAN

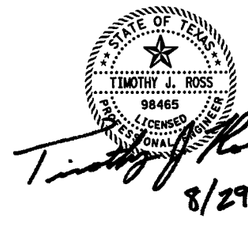

HS 20 LOADING (EXISTING)
HL 93 LOADING (WIDENING)

PESC P.E. Structural Consultants, Inc.
www.PEStructural.com
TBPE Firm No. F-1475

Texas Department of Transportation
© 2012

IH 35W FROM NORTH TARRANT PKWY TO IH 820

213.15' PRESTRESSED CONCRETE I-GIRDER UNIT

SB IH 35W

OVER BIG FOSSIL CK

SCALE: NTS — SHEET 1 OF 2

DESIGN	FED.RD. DIV.NO.	FEDERAL AID PROJECT NO.		HIGHWAY NO.
TJR	6	(SEE TITLE SHEET)		IH 35W
GRAPHICS TLS	STATE	DISTRICT	COUNTY	SHEET NO.
CHECK NRR	TEXAS	FTW	TARRANT	1715
CHECK AB	CONTROL	SECTION	JOB	
	0014	16	255, ETC.	

DRAWING DATE: 7/13/2012 FILENAME: S3BBR*BFC-SBML*PB*01.dgn

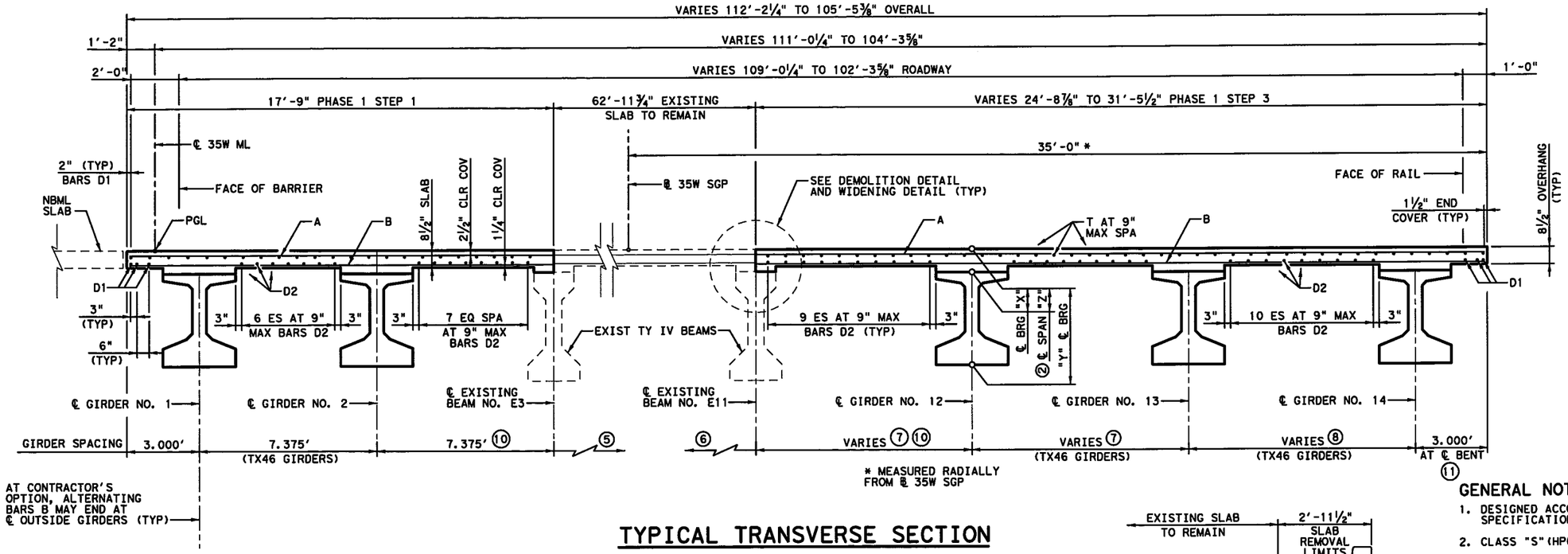

TYPICAL TRANSVERSE SECTION

⑤ 5 SPACES AT 7.583' = 37.917'

⑥ 3 SPACES AT 8.354' = 25.063'

⑦ SPAN 1 AND 2 = 9.006'
SPAN 3 = 7.238'

⑧ SPAN 1 VARIES ~ 10.426' TO 9.006'
SPAN 2 VARIES ~ 9.006' TO 6.061'
SPAN 3 VARIES ~ 9.596' TO 7.238'

⑨ EXISTING TRANSVERSE STEEL TO REMAIN. CLEAN EXISTING REINFORCEMENT BY WET OR DRY GRIT BLASTING. BLAST CORRODED REINFORCEMENT TO GRAY METAL. REPAIR OR REPLACE DAMAGED OR BROKEN BARS USING A METHOD APPROVED BY THE ENGINEER.

⑩ PCP NOT ALLOWED IN THIS BAY.

⑪ SPAN 1 ~ 3.034' MAX
SPAN 2 ~ 3.093' MAX
SPAN 3 ~ 2.965' MIN

GENERAL NOTES:

1. DESIGNED ACCORDING TO AASHTO LRFD BRIDGE DESIGN SPECIFICATIONS, 5TH EDITION (2010).
2. CLASS "S" (HPC) CONCRETE STRENGTH F'C = 4,000 PSI.
3. ALL REINFORCING SHALL BE GRADE 60 AND EPOXY COATED.
4. SEE PCP OR PMDF STANDARDS FOR DETAILS AND QUANTITY ADJUSTMENTS IF EITHER OF THESE OPTIONS ARE USED.
5. SEE IGTS STANDARD FOR THICKENED SLAB END DETAILS.
6. SEE IGMS STANDARD FOR MISCELLANEOUS SLAB DETAILS.
7. SEE RAIL STANDARD FOR RAIL ANCHORAGE IN SLAB.
8. BAR LAPS, WHERE REQUIRED, TO BE AS FOLLOWS:
   #4 = 2'-1"
   #5 = 2'-7"

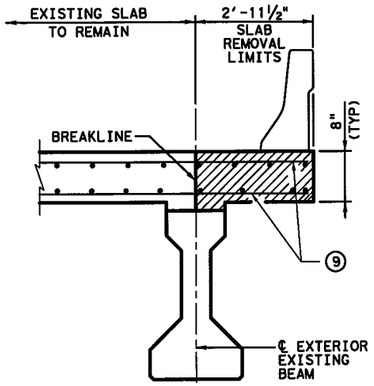

DEMOLITION DETAIL

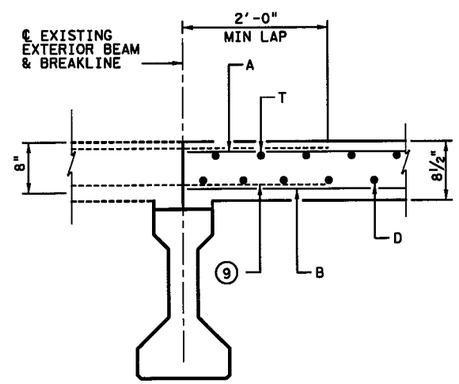

WIDENING DETAIL

TABLE OF ESTIMATED QUANTITIES PHASE 1 STEP 1

SPAN	REINF CONC SLAB	PRESTR CONC I-GIRDERS (TX46) ④	CL S CONC (HPC)	REINFORCING STEEL ③
NO.	SF	LF	CY	LB
1	990	110.52	27.6	6,435
2	1,631	182.74	46.4	10,602
3	1,163	130.06	32.5	7,560
TOTAL	3,784	423.32	106.5	24,597

TABLE OF ESTIMATED QUANTITIES PHASE 1 STEP 3

SPAN	REINF CONC SLAB	PRESTR CONC I-GIRDERS (TX46) ④	CL S CONC (HPC)	REINFORCING STEEL ③
NO.	SF	LF	CY	LB
1	1,715	166.18	47.3	11,148
2	2,625	274.95	74.5	17,063
3	1,699	195.76	47.4	11,044
TOTAL	6,039	636.89	169.2	39,255

③ REINFORCING STEEL WEIGHT IS CALCULATED USING AN APPROXIMATE FACTOR OF 6.5 LBS PER SQ FT.

④ LENGTHS SHOWN ARE BOTTOM OF GIRDER FLANGE LENGTHS WITH ADJUSTMENTS MADE FOR BEAM SLOPE. SEE GIRDER LAYOUT FOR GIRDER LENGTHS.

SPAN NO.	GIRDER NO.	"A" FT	"B" FT
1	1	0.010	0.013
	2	0.011	0.014
	12 & 13	0.013	0.017
	14	0.012	0.015
2	1	0.077	0.098
	2	0.084	0.107
	12	0.101	0.128
	13	0.093	0.118
	14	0.082	0.104
3	1	0.019	0.024
	2	0.021	0.027
	12	0.020	0.026
	13	0.022	0.028
	14	0.021	0.027

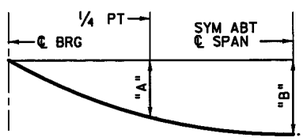

DEAD LOAD DEFLECTION DIAGRAM

CALCULATED DEFLECTIONS SHOWN ARE DUE TO THE CONCRETE SLAB ON INTERIOR GIRDERS ONLY (EC = 5000 KSI). ADJUST VALUES AS REQUIRED FOR EXTERIOR GIRDERS AND IF OPTIONAL SLAB FORMING IS USED. THESE VALUES MAY REQUIRE FIELD VERIFICATION.

BAR TABLE

BAR	SIZE
A	#5
B	#5
D	#5
G	#5
H	#5
J	#5
M	#5
T	#4
U	#4

TABLE OF SECTION DEPTHS

SPAN NO.	GIRDER NO.	"X" AT ℄ BRG	"Y" AT ℄ BRG	②"Z" AT ℄ SPAN
1	1 & 2	10 ½"	4'-8 ½"	9 ⅞"
	12 & 13	10 ½"	4'-8 ½"	9 ¾"
	14	10 ½"	4'-8 ½"	9 ⅝"
2	1 & 12	1'- ¾"	4'-10 ¾"	9 ⅝"
	2	1'- ¾"	4'-10 ¾"	9 ½"
	13 & 14	1'- ¾"	4'-10 ¾"	9 ¾"
3	1	10 ¾"	4'-8 ¾"	10"
	2	10 ¾"	4'-8 ¾"	9 ⅝"
	12 & 13	10 ¾"	4'-8 ¾"	9 ¾"
	14	10 ¾"	4'-8 ¾"	9 ½"

② THEORETICAL DIMENSION

P.E. Structural Consultants, Inc.
www.PEStructural.com
TBPE Firm No. F-1475

Texas Department of Transportation
© 2012

IH 35W FROM NORTH TARRANT PKWY TO IH 820

213.15' PRESTRESSED CONCRETE I-GIRDER UNIT

SB IH 35W

OVER BIG FOSSIL CK

SCALE: NTS — SHEET 2 OF 2

DESIGN	FED. RD. DIV. NO.	FEDERAL AID PROJECT NO.		HIGHWAY NO.
TJR	6	(SEE TITLE SHEET)		IH 35W
GRAPHICS	STATE	DISTRICT	COUNTY	SHEET NO.
TLS	TEXAS	FTW	TARRANT	1716
CHECK	CONTROL	SECTION	JOB	
NRR	0014	16	255, ETC.	
CHECK				
AB				

FILENAME: S3BBR*BFC-SBML*PB*02.dgn
DRAWING DATE: 7/13/2012

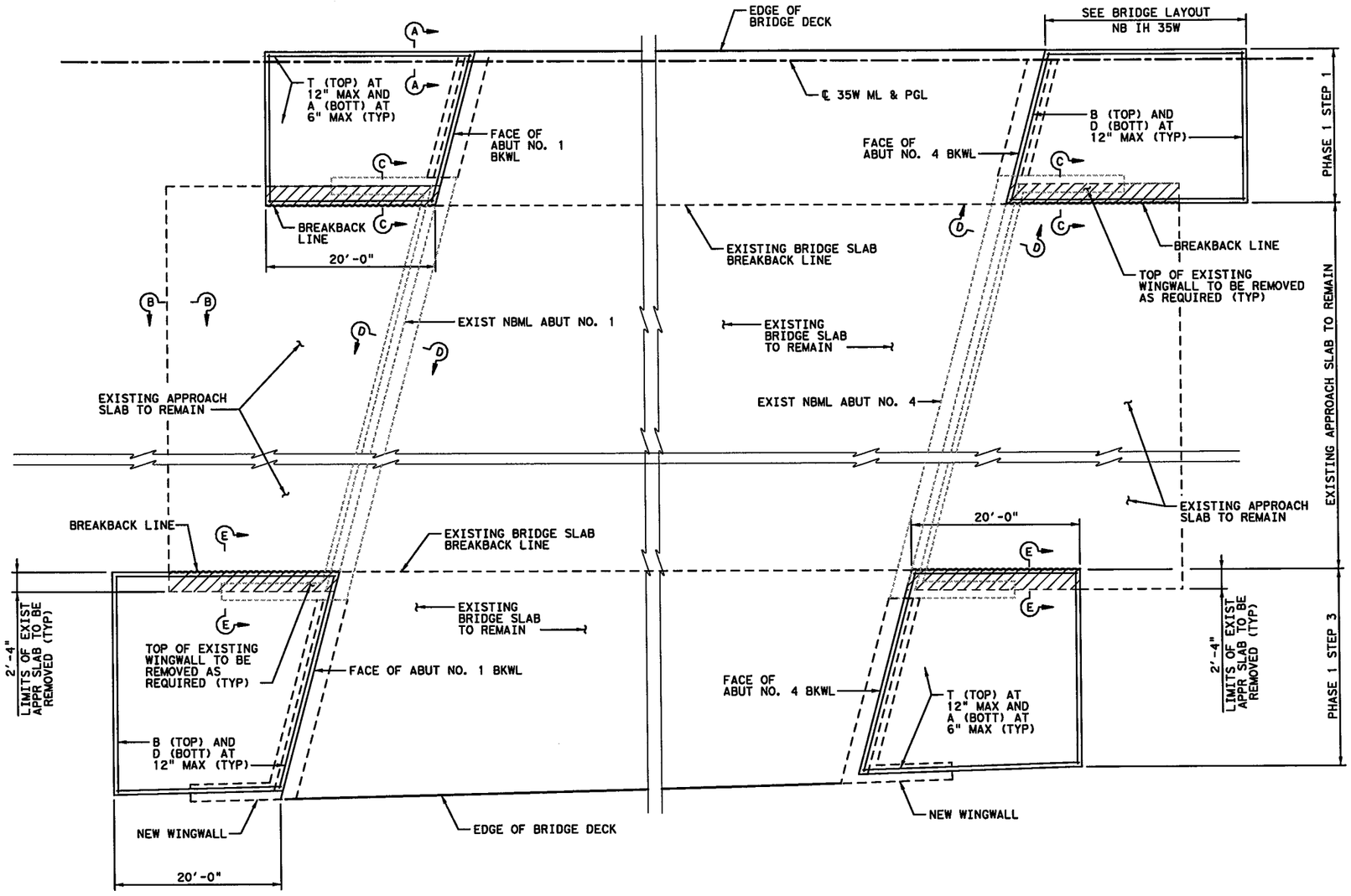

PLAN
(ABUTMENT NO. 1)

PLAN
(ABUTMENT NO. 4)

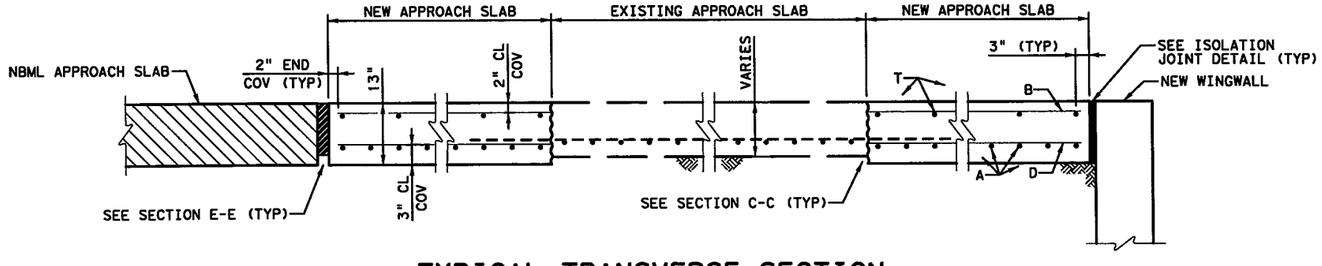

TYPICAL TRANSVERSE SECTION
(SEE LAYOUT FOR CROSS-SLOPE)

1. SEE BAS-A OR BAS-C STANDARDS FOR INFORMATION NOT SHOWN.
2. CONCRETE SHALL BE CLASS "S" (HPC) WITH A MINIMUM COMPRESSIVE STRENGTH OF 4,000 PSI
3. ALL REINFORCING SHALL BE GRADE 60 AND EPOXY COATED.
4. BAR LAPS, WHERE REQUIRED, SHALL BE AS FOLLOWS:
   #4 = 2'-1"
   #5 = 2'-7"
5. SEE SHEET 2 OF 2 FOR SECTIONS AND OTHER DETAILS.

STATE OF TEXAS
TIMOTHY J. ROSS
98465
LICENSED
PROFESSIONAL ENGINEER
7/6/12

HS 20 LOADING (EXISTING)
HL 93 LOADING (WIDENING)

PESC P.E. Structural Consultants, Inc.
www.PEStructural.com
TBPE Firm No. F-1475

Texas Department of Transportation
© 2012

IH 35W FROM NORTH TARRANT PKWY TO IH 820

APPROACH SLAB DETAILS
SB IH 35W
OVER BIG FOSSIL CK

SCALE: NTS — SHEET 1 OF 2

DESIGN	FED.RD. DIV.NO.	FEDERAL AID PROJECT NO.		HIGHWAY NO.
TJR	6	(SEE TITLE SHEET)		IH 35W
GRAPHICS	STATE	DISTRICT	COUNTY	SHEET NO.
TLS	TEXAS	FTW	TARRANT	
CHECK	CONTROL	SECTION	JOB	1717
NRR	0014	16	255, ETC.	
CHECK				
AB				

DRAWING DATE: 7/13/2012 FILENAME: S3BBR*BFC-SBML*AS*01.dgn

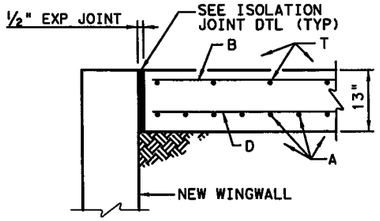

SECTION A-A

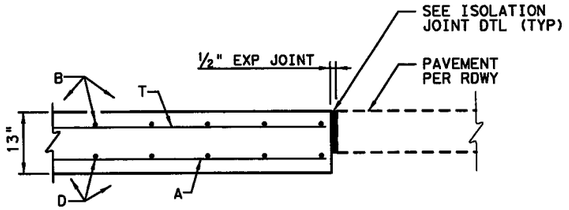

SECTION B-B

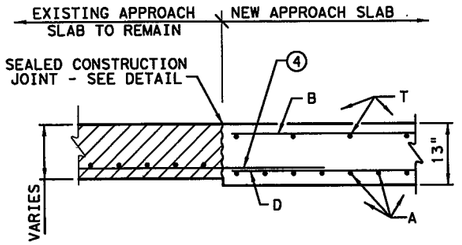

SECTION C-C

④ EXISTING REINFORCING TO EXTEND INTO NEW CONSTRUCTION AND LAP WITH NEW SLAB BARS. CLEAN EXISTING REINFORCING BY WET OR DRY GRIT BLASTING. BLAST CORRODED REINFORCING TO GRAY METAL. REPAIR OR REPLACE DAMAGED OR BROKEN BARS USING A METHOD APPROVED BY THE ENGINEER.

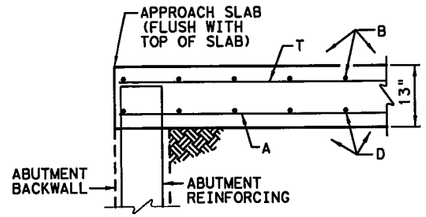

SECTION D-D

① PLACE IN ACCORDANCE WITH ITEM 438.

② BACKER ROD SHALL BE 25% LARGER THAN JOINT OPENING AND SHALL BE COMPATIBLE WITH THE SEALANT.

③ PLACE ½" PREFORMED BITUMINOUS FIBER MATERIAL BETWEEN CONCRETE RAILING AND TOP OF APPROACH SLAB AS SHOWN WHEN CONCRETE RAILING PROJECTS OVER THE APPROACH SLAB.

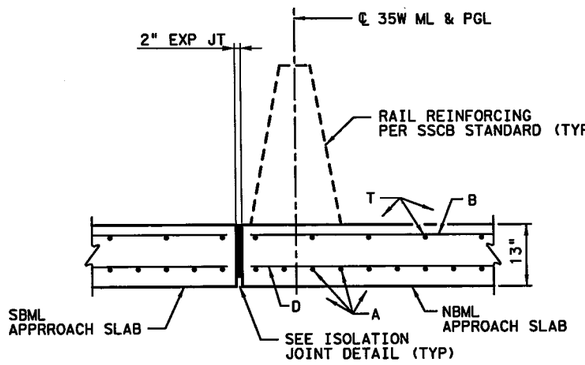

SECTION E-E

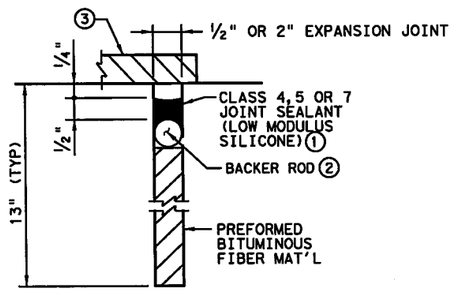

ISOLATION JOINT DETAIL

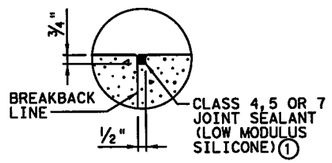

SEALED CONSTRUCTION JOINT DETAIL

BAR TABLE	
BAR	SIZE
A	#8
B	#5
D	#5
E	#5
T	#5

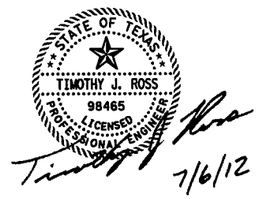

HS 20 LOADING (EXISTING)
HL 93 LOADING (WIDENING)

P.E. Structural Consultants, Inc.
www.PEStructural.com
TBPE Firm No. F-1475

Texas Department of Transportation
© 2012

IH 35W FROM NORTH TARRANT PKWY TO IH 820

APPROACH SLAB DETAILS

SB IH 35W

OVER BIG FOSSIL CK

SCALE: NTS — SHEET 2 OF 2

DESIGN	FED.RD. DIV.NO.	FEDERAL AID PROJECT NO.		HIGHWAY NO.
TJR	6	(SEE TITLE SHEET)		IH 35W
GRAPHICS TLS	STATE	DISTRICT	COUNTY	SHEET NO.
CHECK NRR	TEXAS	FTW	TARRANT	1718
CHECK AB	CONTROL	SECTION	JOB	
	0014	16	255, ETC.	

FILENAME: S3BBR*BFC-SBML*AS*02.dgn

DRAWING DATE: 7/13/2012

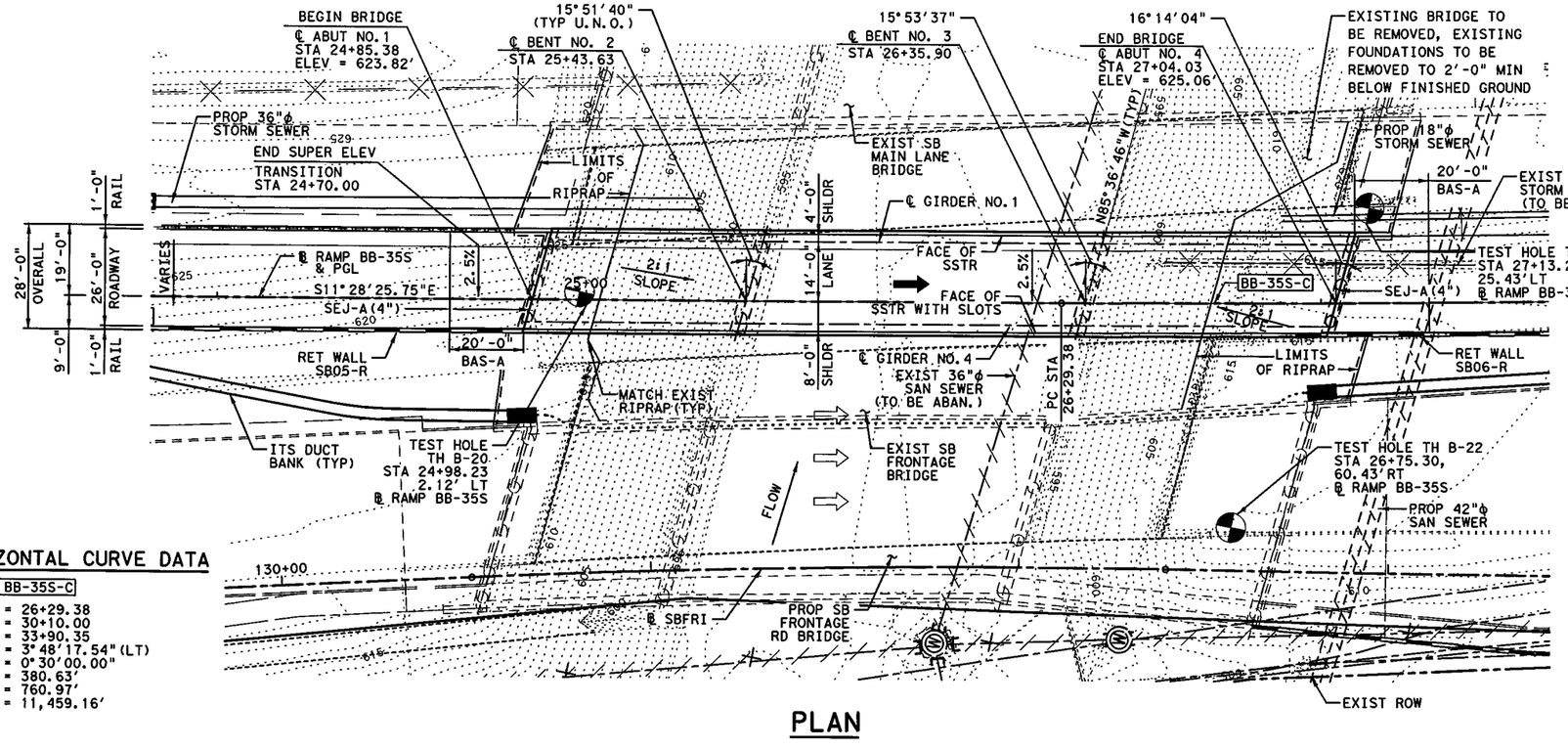

PLAN

HORIZONTAL CURVE DATA

CURVE BB-35S-C

PC STA = 26+29.38
PI STA = 30+10.00
PT STA = 33+90.35
Δ = 3°48'17.54" (LT)
D = 0°30'00.00"
T = 380.63'
L = 760.97'
R = 11,459.16'

GENERAL NOTES:

1. DESIGNED IN ACCORDANCE WITH 2010 AASHTO LRFD BRIDGE DESIGN SPECIFICATIONS.
2. ALL DIMENSIONS ARE EITHER HORIZONTAL OR VERTICAL AND MUST BE CORRECTED FOR GRADE, CROWN, AND/OR SUPER-ELEVATION.
3. "D" DENOTES BENTS WITH DOWEL BARS "D" AND SLOTTED HOLES AT ENDS OF EXTERIOR GIRDERS ONLY.
4. SEE "BORING LOGS - BRIDGE" SHEETS FOR GEOTECHNICAL INFORMATION.
5. FOR TYPICAL SECTION & BRIDGE RELATIONSHIPS SEE "TYPICAL SECTION" SHEET.
6. CONTRACTOR TO VERIFY LOCATION OF ALL UTILITIES PRIOR TO EXCAVATION.
7. SIDE SLOT DRAINS FOR SSTR RAIL SHALL NOT BE LOCATED WITHIN 6' OF ℄ BENT.
8. ALLOWANCE FOR FUTURE RESURFACING: 23.3 PSF.

EXIST NBI = 02-220-0-0014-16-462
NEW NBI = 02-220-0-0014-16-550
FUNCTIONAL CLASS = URBAN FREEWAY
DESIGN SPEED = 45 MPH
ADT = 10,400 (2030)

HL 93 LOADING

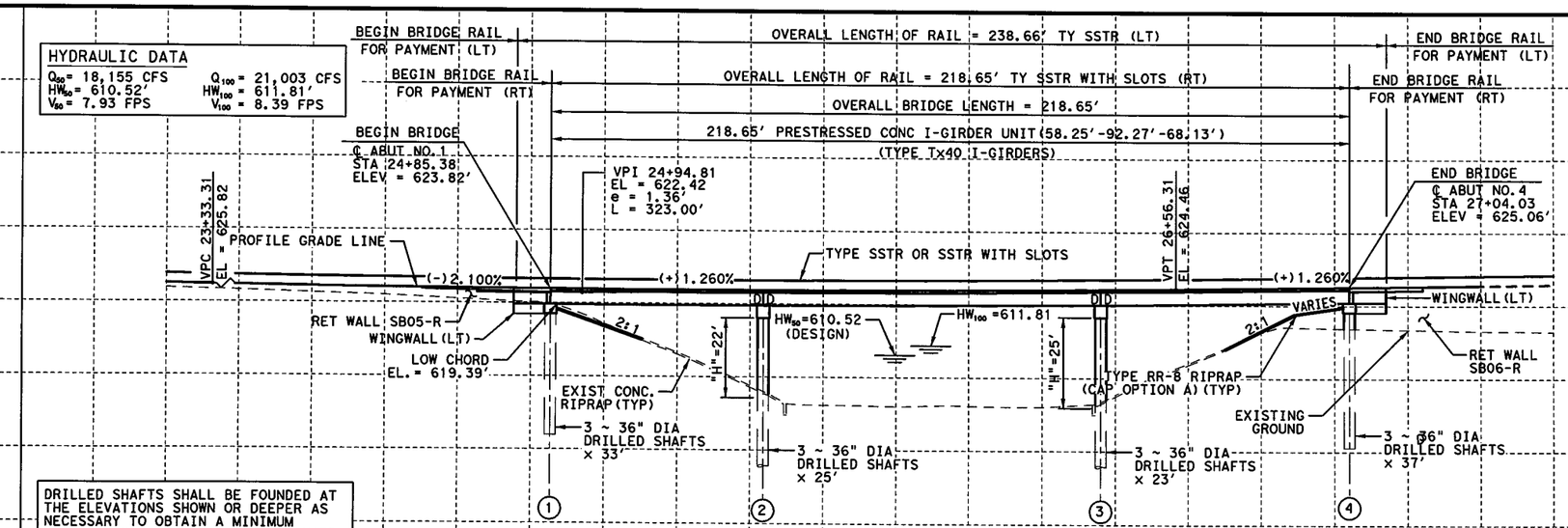

DRILLED SHAFTS SHALL BE FOUNDED AT THE ELEVATIONS SHOWN OR DEEPER AS NECESSARY TO OBTAIN A MINIMUM PENETRATION INTO HARD TO VERY HARD GRAY LIMESTONE AND SHALEY LIMESTONE THE FOLLOWING DISTANCES:
ABUTS NO.1 AND 4 ~ 8'
BENTS NO.2 AND 3 ~ 8'

ELEVATION

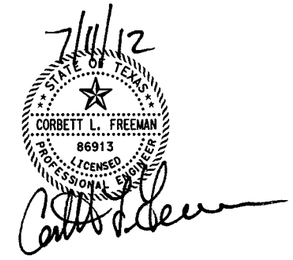

I. S. ENGINEERS, LLC
TBPE REG. # F-11657

Texas Department of Transportation
© 2012

IH 35W FROM NORTH TARRANT PKWY TO IH 820

BRIDGE LAYOUT

SB IH35W ENTR RAMP TO GP OVER BIG FOSSIL CREEK

SCALE: 1" = 40' H & V — SHEET 1 OF 1

DESIGN	FED.RD. DIV.NO.	FEDERAL AID PROJECT NO.		HIGHWAY NO.
CLF	6	(SEE TITLE SHEET)		IH 35W
GRAPHICS SPL	STATE	DISTRICT	COUNTY	SHEET NO.
CHECK SB	TEXAS	FTW	TARRANT	1719
CHECK CLF	CONTROL	SECTION	JOB	
	0014	16	255, ETC.	

FILENAME: S3BBR*BB-35S*BL*01.dgn
DRAWING DATE: 7/13/2012

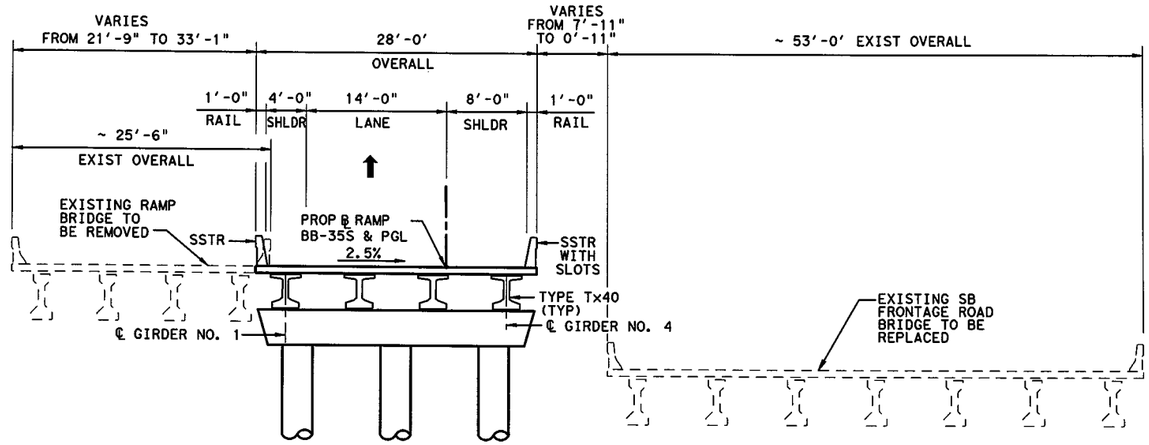

TYPICAL SECTION

(NTS)

NOTES:

FOR GENERAL NOTES, SEE "BRIDGE LAYOUT" SHEET.

7/11/12

STATE OF TEXAS
CORBETT L. FREEMAN
86913
LICENSED
PROFESSIONAL ENGINEER

HL 93 LOADING

I. S. ENGINEERS, LLC
TBPE REG. # F-11657

Texas Department of Transportation
© 2012

IH 35W FROM NORTH TARRANT PKWY TO IH 820

BRIDGE TYPICAL SECTION

SB IH35W ENTR RAMP TO GP OVER BIG FOSSIL CREEK

SCALE: NTS — SHEET 1 OF 1

DESIGN	FED.RD. DIV.NO.	FEDERAL AID PROJECT NO.		HIGHWAY NO.
CLF	6	(SEE TITLE SHEET)		IH 35W
GRAPHICS	STATE	DISTRICT	COUNTY	SHEET NO.
AXD	TEXAS	FTW	TARRANT	
CHECK	CONTROL	SECTION	JOB	1720
SB	0014	16	255, ETC.	
CHECK				
CLF				

DRAWING DATE: 7/13/2012 FILENAME: S3BBR*BB-35S*TS*01.dgn

SUMMARY OF ESTIMATED QUANTITIES

BID ITEM	416 2004	420 2041	420 2042	420 2256	422 2003	425 2066	428 2002	432 2002	450 2102	454 2001
BID ITEM DESCRIPTION / BRIDGE ELEMENT	DRILL SHAFT (36 IN)	CL C CONC (HPC) (ABUT)	CL C CONC (HPC) (BENT)	CL S CONC (HPC) (APPR SLAB)	REINF CONC SLAB (HPC) (CL S)	PRESTR CONC GIRDER (TX40)	CONC SURF TREATMENT (CLASS II)	RIPRAP (CONC) (5 IN)	RAIL (TYPE SSTR) (HPC)	SEALED EXPANSION JOINT (4 IN) (SEJ-A)
	LF	CY	CY	CY	SF	LF	SY	CY	LF	LF
2 - ABUTMENTS	210	32.0		49			90	50	20.0	55
2 - INTERIOR BENTS	144		61.7				61			
1 - 218.650' PRESTRESSED CONCRETE I-GIRDER UNIT (SPANS 1-3)					6,122	868.55	622		437.3	
TOTALS	354	32.0	61.7	49	6,122	868.55	773	50	457.3	55

BEARING SEAT ELEVATIONS

		BEAM 1	BEAM 2	BEAM 3	BEAM 4
ABUT 1	(FWD)	619.676	619.502	619.329	619.157
BENT 2	(BK)	619.581	619.395	619.210	619.025
	(FWD)	619.583	619.397	619.212	619.026
BENT 3	(BK)	620.139	619.933	619.728	619.523
	(FWD)	620.161	619.955	619.749	619.544
ABUT 4	(BK)	620.985	620.774	620.564	620.354

8/24/12

STATE OF TEXAS
CORBETT L. FREEMAN
86913
LICENSED
PROFESSIONAL ENGINEER

I. S. ENGINEERS, LLC
TBPE REG. # F-11657

Texas Department of Transportation
© 2012

IH 35W FROM NORTH TARRANT PKWY TO IH 820

EST. QUANTITIES AND BEARING SEAT ELEV.

SB IH35W ENTR RAMP TO GP OVER BIG FOSSIL CREEK

SCALE: NTS — SHEET 1 OF 1

DESIGN	FED. RD. DIV. NO.	FEDERAL AID PROJECT NO.		HIGHWAY NO.
CLF	6	(SEE TITLE SHEET)		IH 35W
GRAPHICS: CLF	STATE	DISTRICT	COUNTY	SHEET NO.
CHECK: AXD/SB	TEXAS	FTW	TARRANT	1721
CHECK: CLF	CONTROL	SECTION	JOB	
	0014	16	255, ETC.	

DRAWING DATE: 8/24/2012 FILENAME: S3BBR*BB-35S*EQ*01.dgn

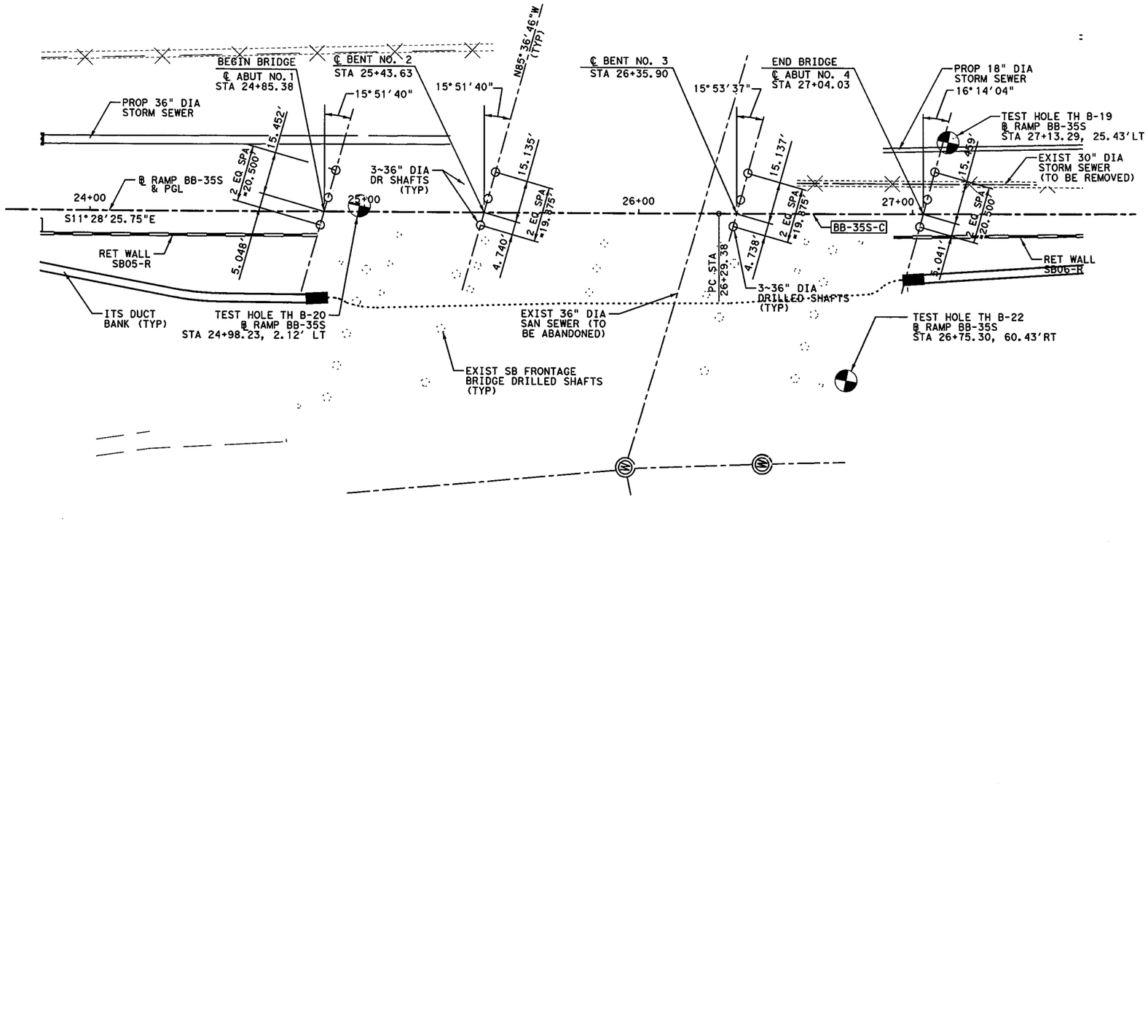

0' 10' 20' 40'

SCALE IN FEET

GENERAL NOTES:

1. FOR ANY TEMPORARY SHORING REQUIRED AT INTERIOR BENT LOCATIONS, FOLLOW TxDOT STANDARD SPECIFICATION ITEM 403.
2. SEE SOIL "BORING LOGS - BRIDGE" SHEETS FOR TEST HOLE INFORMATION.
3. ⊕ DENOTES TEST HOLE LOCATION.
4. CONTRACTOR TO VERIFY LOCATION OF ALL UTILITIES PRIOR TO EXCAVATION.

HORIZONTAL CURVE DATA

CURVE	BB-35S-C
PC STA	= 26+29.38
PI STA	= 30+10.00
PT STA	= 33+90.35
Δ	= 3°48'17.54" (LT)
D	= 0°30'00.00"
T	= 380.63'
L	= 760.97'
R	= 11,459.16'

7/11/12

STATE OF TEXAS
CORBETT L. FREEMAN
86913
LICENSED PROFESSIONAL ENGINEER

HL 93 LOADING

I. S. ENGINEERS, LLC
TBPE REG. # F-11657

Texas Department of Transportation

© 2012

IH 35W FROM NORTH TARRANT PKWY TO IH 820

FOUNDATION LAYOUT
SB IH35W ENTR RAMP TO GP OVER BIG FOSSIL CREEK

SCALE: 1" = 40' SHEET 1 OF 1

DESIGN	FED.RD. DIV.NO.	FEDERAL AID PROJECT NO.		HIGHWAY NO.
CLF	6	(SEE TITLE SHEET)		IH 35W
GRAPHICS AXD	STATE	DISTRICT	COUNTY	SHEET NO.
CHECK SB	TEXAS	FTW	TARRANT	1722
CHECK CLF	CONTROL 0014	SECTION 16	JOB 255, ETC.	

DRAWING DATE: 7/13/2012 FILENAME: S3BBR*BB-35S*FL*01.dgn

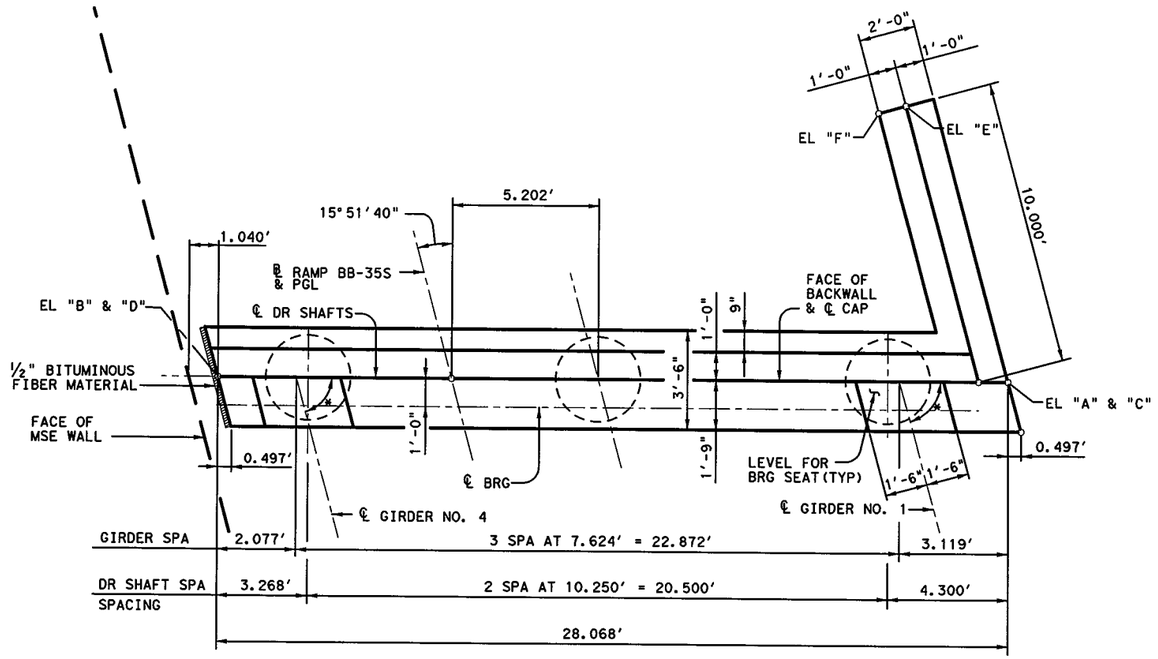

PLAN

* SEE GIRDER LAYOUT FOR BEAM ANGLES

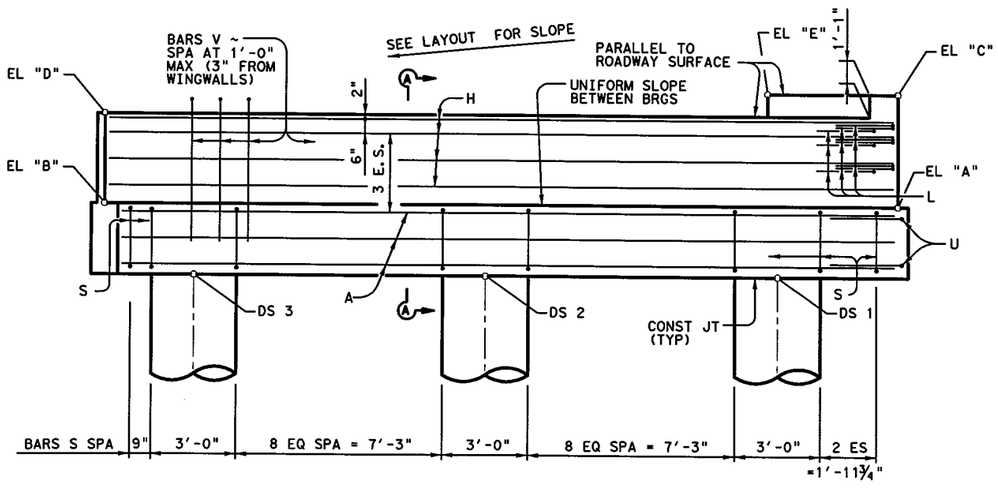

ELEVATION

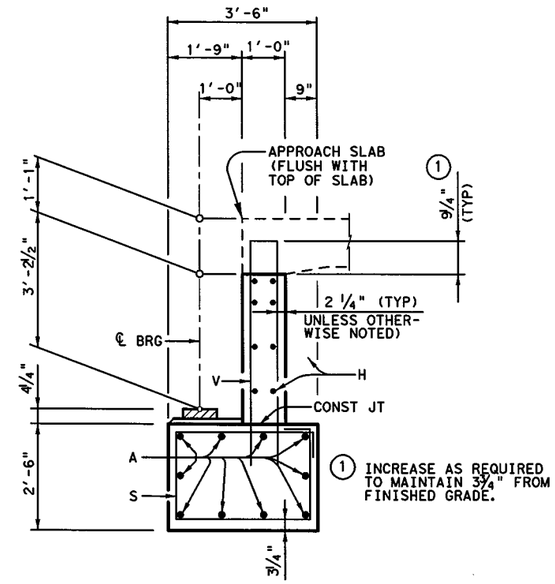

SECTION A-A

TABLE OF ELEVATIONS				
CAP	"A"	"B"	"C"	"D"
	619.615	618.979	624.261	622.542
WING WALL	"E"	"F"		
	624.319	619.673		
DRILL SHAFT	DS 1	DS 2	DS 3	
	617.018	616.785	616.553	
DS TIP	584.018	583.785	583.553	
AS-BUILT DS TIP				

GENERAL NOTES:

DESIGNED ACCORDING TO AASHTO LRFD SPECIFICATIONS, 5TH EDITION (2010).

CLASS"C"(HPC) CONCRETE STRENGTH F'C = 3,600 PSI.

ALL CAP AND WALL REINFORCING SHALL BE GRADE 60.

SEE FD STANDARD FOR ALL FOUNDATION DETAILS AND NOTES.

SEE RAIL STANDARD FOR ALL ANCHORAGE IN WINGWALLS.

CALCULATED FOUNDATION LOADS:
CAP DRILLED SHAFTS = 127 TONS/D.S.

7/11/12
STATE OF TEXAS
CORBETT L. FREEMAN
86913
LICENSED
PROFESSIONAL ENGINEER

HL 93 LOADING

I. S. ENGINEERS, LLC
TBPE REG. # F-11657

Texas Department of Transportation
© 2012

IH 35W FROM NORTH TARRANT PKWY TO IH 820

ABUTMENT NO. 1

SB IH35W ENTR RAMP TO GP OVER BIG FOSSIL CREEK

SCALE: NTS — SHEET 1 OF 1

DESIGN	FED.RD. DIV.NO.	FEDERAL AID PROJECT NO.		HIGHWAY NO.
ZFS	6	(SEE TITLE SHEET)		IH 35W
GRAPHICS AXD	STATE	DISTRICT	COUNTY	SHEET NO.
CHECK SB	TEXAS	FTW	TARRANT	
CHECK CLF	CONTROL	SECTION	JOB	1723
	0014	16	255, ETC.	

FILENAME: S3BBR*BB-35S*AB*01.dgn

DRAWING DATE: 7/13/2012

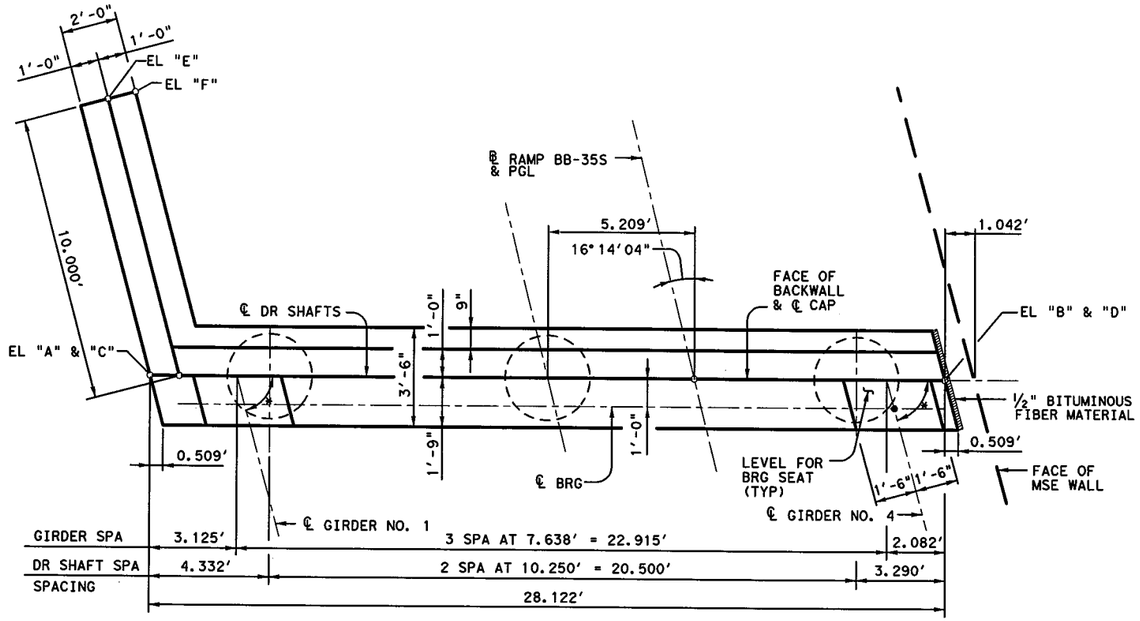

PLAN

* SEE GIRDER LAYOUT FOR BEAM ANGLES

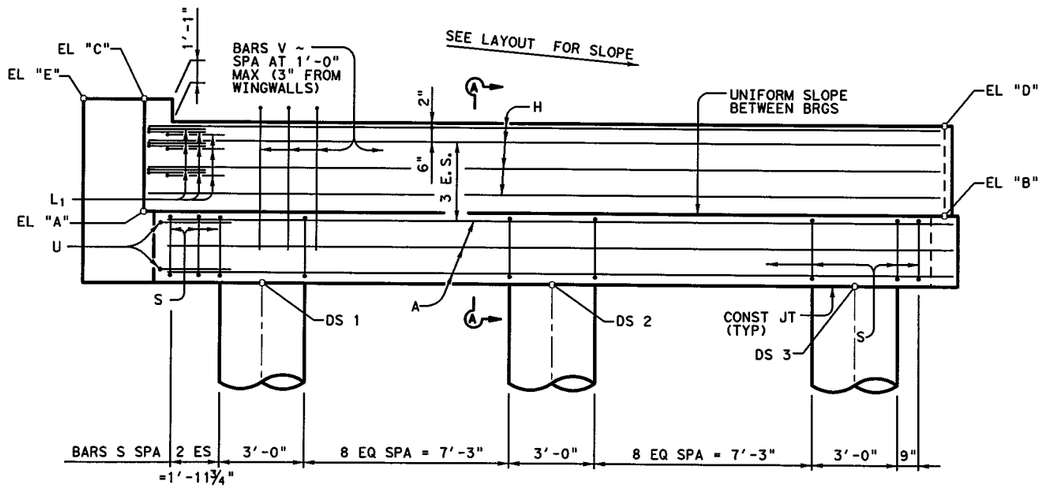

ELEVATION

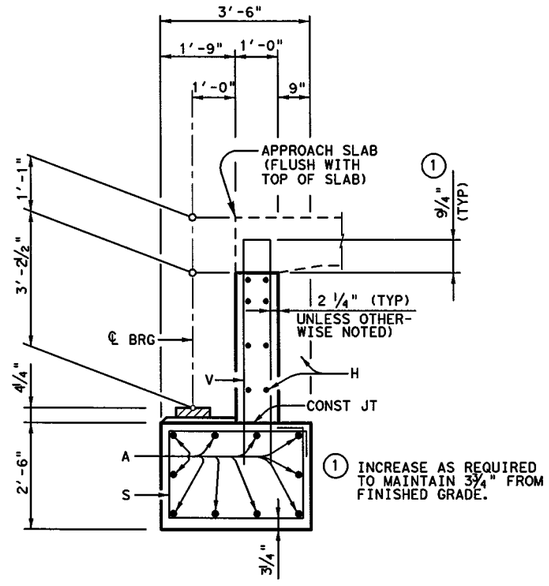

SECTION A-A

TABLE OF ELEVATIONS				
CAP	"A"	"B"	"C"	"D"
	620.954	620.180	625.600	623.743
WING WALL	"E"	"F"		
	625.726	621.080		
DRILL SHAFT	DS 1	DS 2	DS 3	
	618.335	618.053	617.770	
DS TIP	581.335	581.053	580.770	
AS-BUILT DS TIP				

GENERAL NOTES:

DESIGNED ACCORDING TO AASHTO LRFD SPECIFICATIONS, 5TH EDITION (2010).

CLASS"C"(HPC) CONCRETE STRENGTH F'C = 3,600 PSI.

ALL CAP AND WALL REINFORCING SHALL BE GRADE 60.

SEE FD STANDARD FOR ALL FOUNDATION DETAILS AND NOTES.

SEE RAIL STANDARD FOR ALL ANCHORAGE IN WINGWALLS.

CALCULATED FOUNDATION LOADS:
CAP DRILLED SHAFTS = 127 TONS/D.S.

7/11/12
STATE OF TEXAS
CORBETT L. FREEMAN
86913
LICENSED PROFESSIONAL ENGINEER

HL 93 LOADING

I. S. ENGINEERS, LLC
TBPE REG. # F-11657

Texas Department of Transportation
© 2012

IH 35W FROM NORTH TARRANT PKWY TO IH 820

ABUTMENT NO. 4

SB IH35W ENTR RAMP TO GP OVER BIG FOSSIL CREEK

SCALE: NTS — SHEET 1 OF 1

DESIGN	FED.RD. DIV.NO.	FEDERAL AID PROJECT NO.		HIGHWAY NO.
ZFS	6	(SEE TITLE SHEET)		IH 35W
GRAPHICS AXD	STATE	DISTRICT	COUNTY	SHEET NO.
CHECK SB	TEXAS	FTW	TARRANT	1724
CHECK CLF	CONTROL	SECTION	JOB	
	0014	16	255, ETC.	

DRAWING DATE: 7/13/2012 FILENAME: S38BR*BB-35S*AB*02.dgn

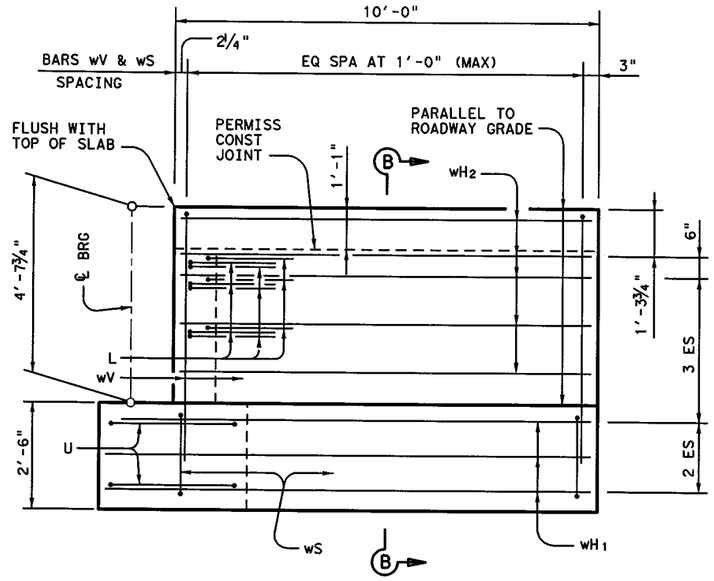

WINGWALL ELEVATION

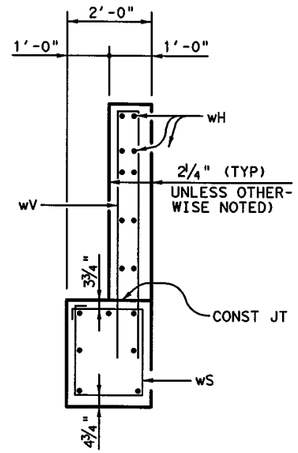

SECTION B-B

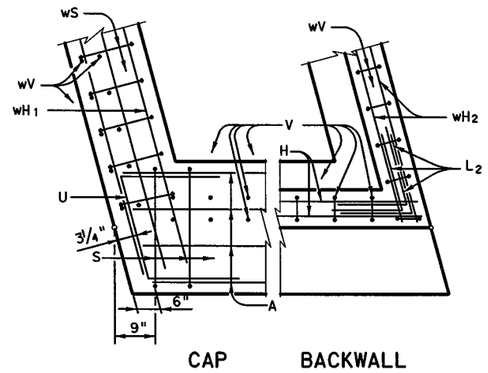

CAP BACKWALL

CORNER DETAILS

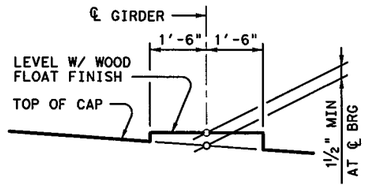

BEARING SEAT DETAIL

(BEARING SURFACE MUST BE CLEAN AND FREE OF ALL LOOSE MATERIAL BEFORE PLACING BEARING PAD.)

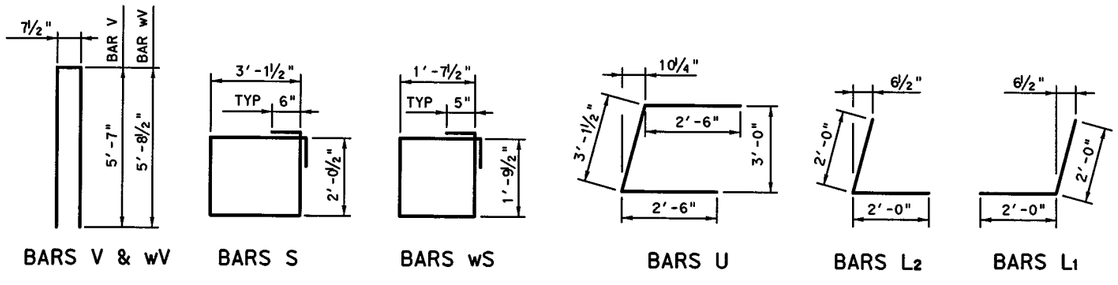

TABLES OF ESTIMATED QUANTITIES

ABUTMENT 1

BAR	NO.	SIZE	LENGTH	WEIGHT
A	10	#11	27'-3"	1,448
H	8	#6	27'-8"	332
L_2	9	#6	4'-0"	54
S	23	#5	11'-4"	272
U	4	#6	8'-2"	50
V	28	#5	11'-10"	346
wH_1	7	#6	11'-5"	120
wH_2	10	#6	9'-8"	145
wS	11	#4	7'-8"	56
wV	11	#5	12'-1"	139
REINFORCING STEEL			LB	2,962
CL "C" CONCRETE (HPC) (ABUT)			CY	16.0

ABUTMENT 4

BAR	NO.	SIZE	LENGTH	WEIGHT
A	10	#11	27'-4"	1,452
H	8	#6	27'-9"	334
L_1	9	#6	4'-0"	54
S	23	#5	11'-4"	272
U	4	#6	8'-2"	50
V	28	#5	11'-10"	346
wH_1	7	#6	11'-5"	120
wH_2	10	#6	9'-8"	145
wS	11	#4	7'-8"	56
wV	11	#5	12'-1"	139
REINFORCING STEEL			LB	2,968
CL "C" CONCRETE (HPC) (ABUT)			CY	16.0

THE FRONT AND BACK, BACKWALL FACES, SIDES, AND TOP, EXCEPT UNDER BEARING AREAS, SHALL BE TREATED WITH A "CLASS II, TYPE I PENETRATING CONCRETE SURFACE TREATMENT".

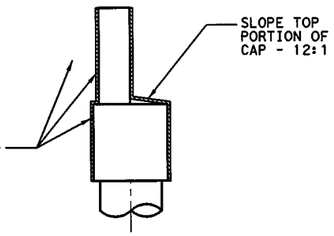

CONCRETE SURFACE TREATMENT DETAIL FOR ABUTMENT

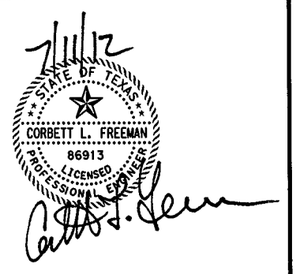

HL 93 LOADING

I. S. ENGINEERS, LLC
TBPE REG. # F-11657

Texas Department of Transportation
© 2012

IH 35W FROM NORTH TARRANT PKWY TO IH 820

MISCELLANEOUS ABUTMENT DETAILS

SB IH35W ENTR RAMP TO GP OVER BIG FOSSIL CREEK

SCALE: NTS — SHEET 1 OF 1

DESIGN	FED.RD. DIV.NO.	FEDERAL AID PROJECT NO.		HIGHWAY NO.
ZFS	6	(SEE TITLE SHEET)		IH 35W
GRAPHICS AXD	STATE	DISTRICT	COUNTY	SHEET NO.
CHECK SB	TEXAS	FTW	TARRANT	1725
CHECK CLF	CONTROL	SECTION	JOB	
	0014	16	255, ETC.	

FILENAME: S3BBR*BB-35S*AB#03.dgn

DRAWING DATE: 7/13/2012

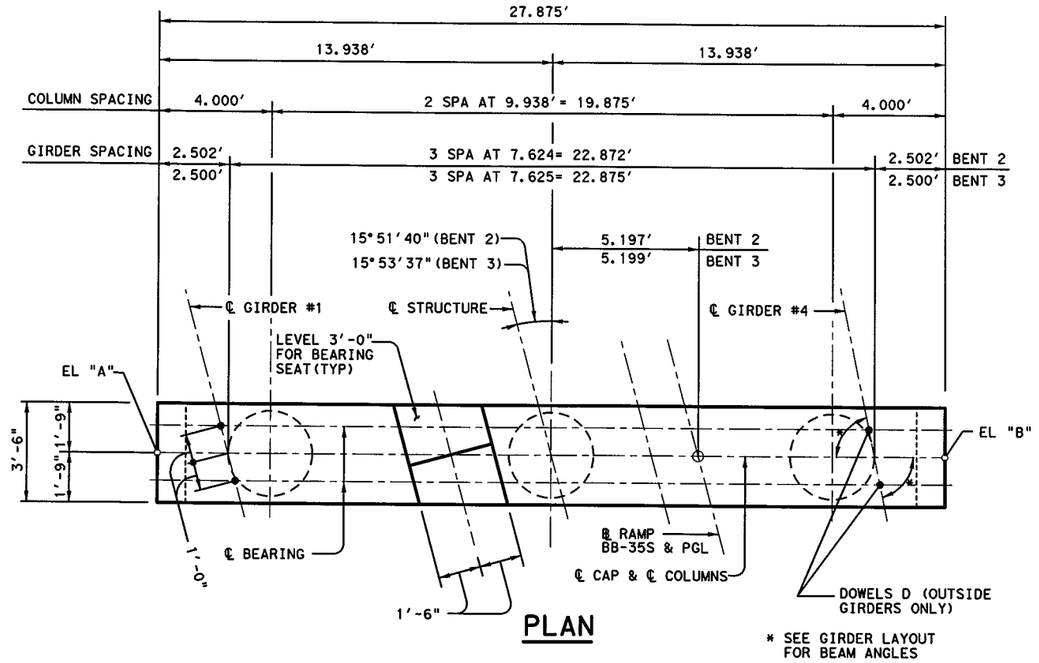

PLAN

* SEE GIRDER LAYOUT FOR BEAM ANGLES

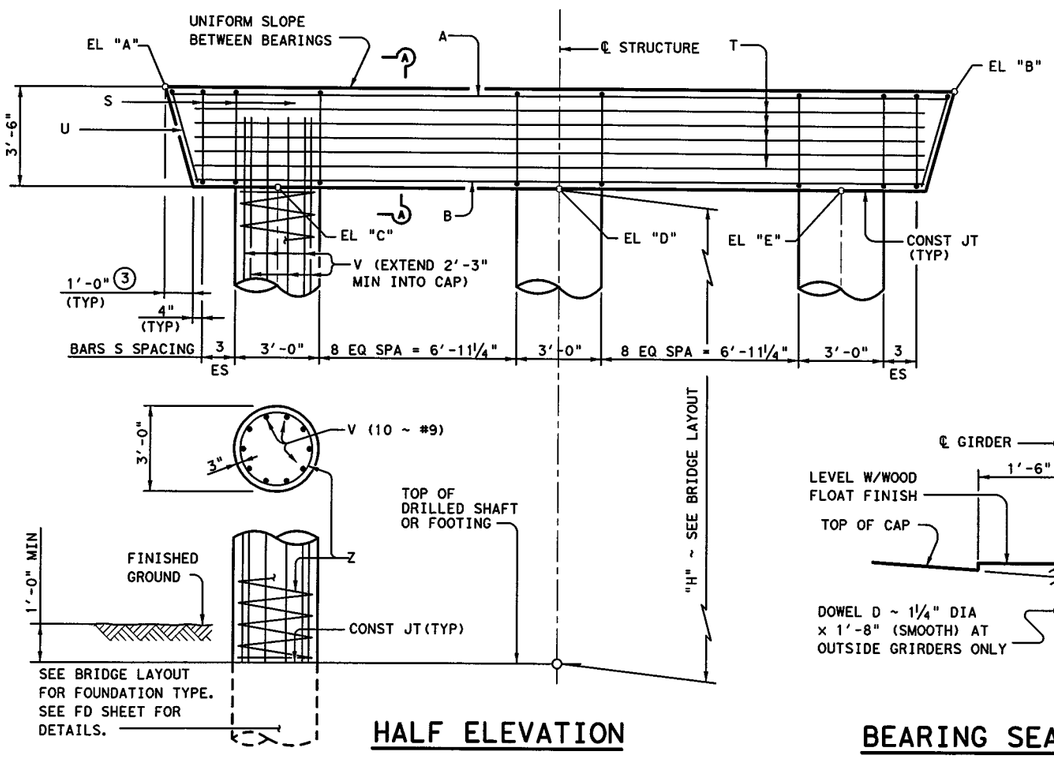

HALF ELEVATION

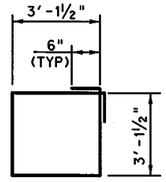

BARS S

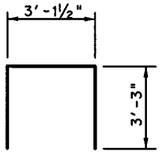

BARS U

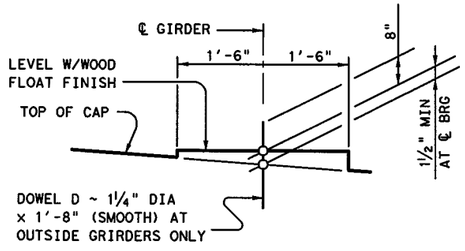

BEARING SEAT DETAIL

(BEARING SURFACE MUST BE CLEAN AND FREE OF ALL LOOSE MATERIAL BEFORE PLACING BEARING PAD.)

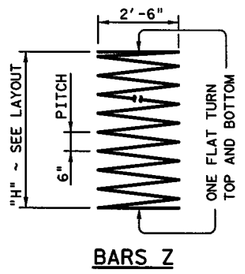

BARS Z

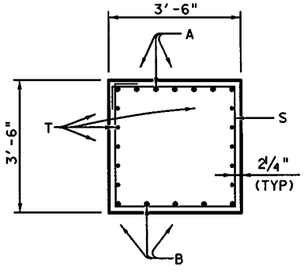

SECTION A-A

THE TOP, SIDES, AND ENDS, EXCEPT UNDER BEARING AREAS, SHALL BE TREATED WITH A "CLASS II, TYPE I PENETRATING CONCRETE SURFACE TREATMENT"

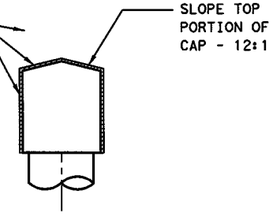

CONCRETE SURFACE TREATMENT DETAIL FOR INTERIOR BENT

① TABLE OF COLUMN QUANTITIES

BENT	"H"	CL. "C" CONC. (HPC) (COL)	BARS V 30 ~ #9		BARS Z 3 ~ #3 SPIRAL	
NO.	FT	CY	LENGTH	WT.	NO.	WT.
2	22	17.3	24'-3"	2,474	362'-0"	408
3	25	19.6	27'-3"	2,780	409'-3"	462

①② TOTAL ESTIMATED QUANTITIES

REINF. STEEL	CL. "C" CONC. (HPC) (BENT)
LB	CY
5,268	29.7
5,628	32.0

TABLE OF ELEVATIONS ~ BENT 2

CAP "A"	"B"	"C"	"D"	"E"
619.512	618.833	615.915	615.673	615.431
TOP OF DRILLED SHAFT*		DS 1	DS 2	DS 3
		593.915	593.673	593.431
DRILLED SHAFT TIP		568.915	568.673	568.431
AS-BUILT DRILLED SHAFT TIP				

TABLE OF ELEVATIONS ~ BENT 3

CAP "A"	"B"	"C"	"D"	"E"
620.089	619.338	616.481	616.214	615.946
TOP OF DRILLED SHAFT*		DS 1	DS 2	DS 3
		591.481	591.214	590.946
DRILLED SHAFT TIP		568.481	568.214	567.946
AS-BUILT DRILLED SHAFT TIP				

* TOP OF DRILLED SHAFT ELEVATIONS WERE ESTIMATED BASED ON GROUND ELEVATION INFORMATION AVAILABLE AT THE TIME OF DESIGN. CONTRACTOR SHALL CONFIRM THESE ELEVATIONS PRIOR TO DRILLING.

TABLE OF CONSTANT QUANTITIES ②

BAR	NO.	SIZE	LENGTH	WEIGHT
A	7	#11	27'- 7"	1,026
B	5	#11	25'- 7"	680
D	4	1¼" D	1'- 8"	28
S	26	#5	13'- 6"	366
T	10	#5	25'- 7"	267
U	2	#5	9'- 8"	20
REINFORCING STEEL			LB	2,386
CL "C" CONCRETE (HPC) (CAP)			CY	12.4

① FOR EACH LINEAR FOOT VARIATION IN "H" VALUE, MAKE THE FOLLOWING ADJUSTMENTS:
BARS V LENGTH, 1'-0"
BARS Z LENGTH, 15.740'
REINFORCING STEEL, 120 LB
CLASS "C" CONC (COL), 0.785 CY

② QUANTITIES SHOWN ARE FOR ONE BENT ONLY.

③ MEASURED PARALLEL TO TOP OF CAP CROSS-SLOPE.

GENERAL NOTES:

DESIGNED ACCORDING TO AASHTO LRFD SPECIFICATIONS, 5TH EDITION (2010).

CLASS "C" (HPC) CONCRETE STRENGTH F'C = 3,600 PSI.

ALL REINFORCING SHALL BE GRADE 60.

SEE FD STANDARD FOR ALL FOUNDATION DETAILS AND NOTES.

CALCULATED FOUNDATION LOAD: 201 TONS / D.S.

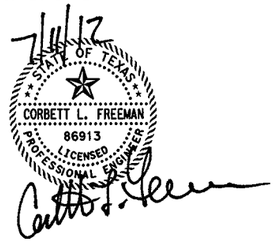

HL 93 LOADING

I. S. ENGINEERS, LLC
TBPE REG. # F-11657

Texas Department of Transportation
© 2012

IH 35W FROM NORTH TARRANT PKWY TO IH 820

INTERIOR BENTS NO. 2 & 3

SB IH35W ENTR RAMP TO GP OVER BIG FOSSIL CREEK

SCALE: NTS — SHEET 1 OF 1

DESIGN	FED. RD. DIV. NO.	FEDERAL AID PROJECT NO.		HIGHWAY NO.
ZFS	6	(SEE TITLE SHEET)		IH 35W
GRAPHICS SPL	STATE	DISTRICT	COUNTY	SHEET NO.
CHECK SB	TEXAS	FTW	TARRANT	1726
CHECK CLF	CONTROL 0014	SECTION 16	JOB 255, ETC.	

FILENAME: S3BBR*BB-35S*IB*01.dgn
DRAWING DATE: 7/13/2012

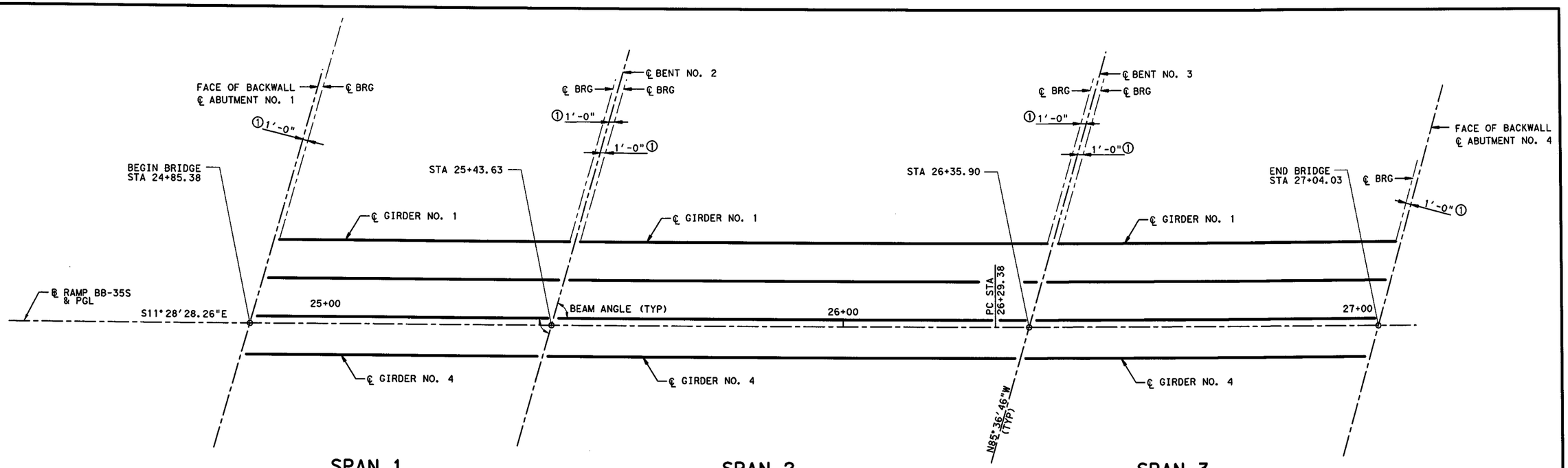

SPAN 1
(TX40 GIRDERS)

BENT REPORT

BENT NO. 1 (N 85 36 46.00 W)
DISTANCE BETWEEN STATION LINE AND BEAM 1 16.633 L

			BEAM SPAC. (C.L. BENT)	BEAM ANGLE D	M	S
SPAN 1	BEAM	1	0.000	74	8	20
	BEAM	2	7.624	74	8	20
	BEAM	3	7.624	74	8	20
	BEAM	4	7.624	74	8	20
	TOTAL		22.871			

BENT NO. 2 (N 85 36 46.00 W)
DISTANCE BETWEEN STATION LINE AND BEAM 1 16.633 L

			BEAM SPAC. (C.L. BENT)	BEAM ANGLE D	M	S
SPAN 1	BEAM	1	0.000	74	8	20
	BEAM	2	7.624	74	8	20
	BEAM	3	7.624	74	8	20
	BEAM	4	7.624	74	8	20
	TOTAL		22.871			
SPAN 2	BEAM	1	0.000	74	8	8
	BEAM	2	7.624	74	8	12
	BEAM	3	7.624	74	8	15
	BEAM	4	7.624	74	8	17
	TOTAL		22.871			

BENT NO. 3 (N 85 36 46.00 W)
DISTANCE BETWEEN STATION LINE AND BEAM 1 16.637 L

			BEAM SPAC. (C.L. BENT)	BEAM ANGLE D	M	S
SPAN 2	BEAM	1	0.000	74	8	8
	BEAM	2	7.625	74	8	12
	BEAM	3	7.625	74	8	15
	BEAM	4	7.625	74	8	17
	TOTAL		22.875			
SPAN 3	BEAM	1	0.000	73	54	46
	BEAM	2	7.625	73	55	24
	BEAM	3	7.625	73	56	2
	BEAM	4	7.625	73	56	40
	TOTAL		22.875			

BENT NO. 4 (N 85 36 46.00 W)
DISTANCE BETWEEN STATION LINE AND BEAM 1 16.665 L

			BEAM SPAC. (C.L. BENT)	BEAM ANGLE D	M	S
SPAN 3	BEAM	1	0.000	73	54	46
	BEAM	2	7.639	73	55	24
	BEAM	3	7.638	73	56	2
	BEAM	4	7.638	73	56	40
	TOTAL		22.915			

SPAN 2
(TX40 GIRDERS)

BEAM REPORT

BEAM REPORT, SPAN 1

	HORIZONTAL DISTANCE C-C BENT	C-C BRG.	TRUE DISTANCE ② BOT. BM.	FLG.
BEAM 1	58.250	56.210	57.74	-0.0017
BEAM 2	58.250	56.210	57.74	-0.0019
BEAM 3	58.250	56.210	57.74	-0.0021
BEAM 4	58.250	56.210	57.74	-0.0023

BEAM REPORT, SPAN 2

	HORIZONTAL DISTANCE C-C BENT	C-C BRG.	TRUE DISTANCE ② BOT. BM.	FLG.
BEAM 1	92.271	90.271	91.77	0.0062
BEAM 2	92.270	90.270	91.77	0.0059
BEAM 3	92.270	90.270	91.77	0.0057
BEAM 4	92.270	90.270	91.77	0.0055

BEAM REPORT, SPAN 3

	HORIZONTAL DISTANCE C-C BENT	C-C BRG.	TRUE DISTANCE ② BOT. BM.	FLG.
BEAM 1	68.138	66.097	67.63	0.0125
BEAM 2	68.134	66.093	67.63	0.0124
BEAM 3	68.131	66.090	67.63	0.0123
BEAM 4	68.127	66.086	67.62	0.0123

SPAN 3
(TX40 GIRDERS)

① SEE IGEB STANDARD FOR ORIENTATION OF DIMENSION.

② GIRDER LENGTHS SHOWN ARE BOTTOM OF GIRDER FLANGE LENGTHS WITH ADJUSTMENTS MADE FOR BEAM SLOPE.

STATE OF TEXAS
CORBETT L. FREEMAN
86913
LICENSED
PROFESSIONAL ENGINEER

HL 93 LOADING

I. S. ENGINEERS, LLC
TBPE REG. # F-11657

Texas Department of Transportation
© 2012

IH 35W FROM NORTH TARRANT PKWY TO IH 820

GIRDER LAYOUT (SPANS 1-3)

SB IH35W ENTR RAMP TO GP OVER BIG FOSSIL CREEK

SCALE: 1" = 20' SHEET 1 OF 1

DESIGN	FED.RD. DIV.NO.	FEDERAL AID PROJECT NO.		HIGHWAY NO.
CLF	6	(SEE TITLE SHEET)		IH 35W
GRAPHICS SPL	STATE	DISTRICT	COUNTY	SHEET NO.
CHECK SB	TEXAS	FTW	TARRANT	1727
CHECK CLF	CONTROL 0014	SECTION 16	JOB 255, ETC.	

DRAWING DATE: 7/13/2012 FILENAME: S3BBR*BB-35S*GF*01.dgn

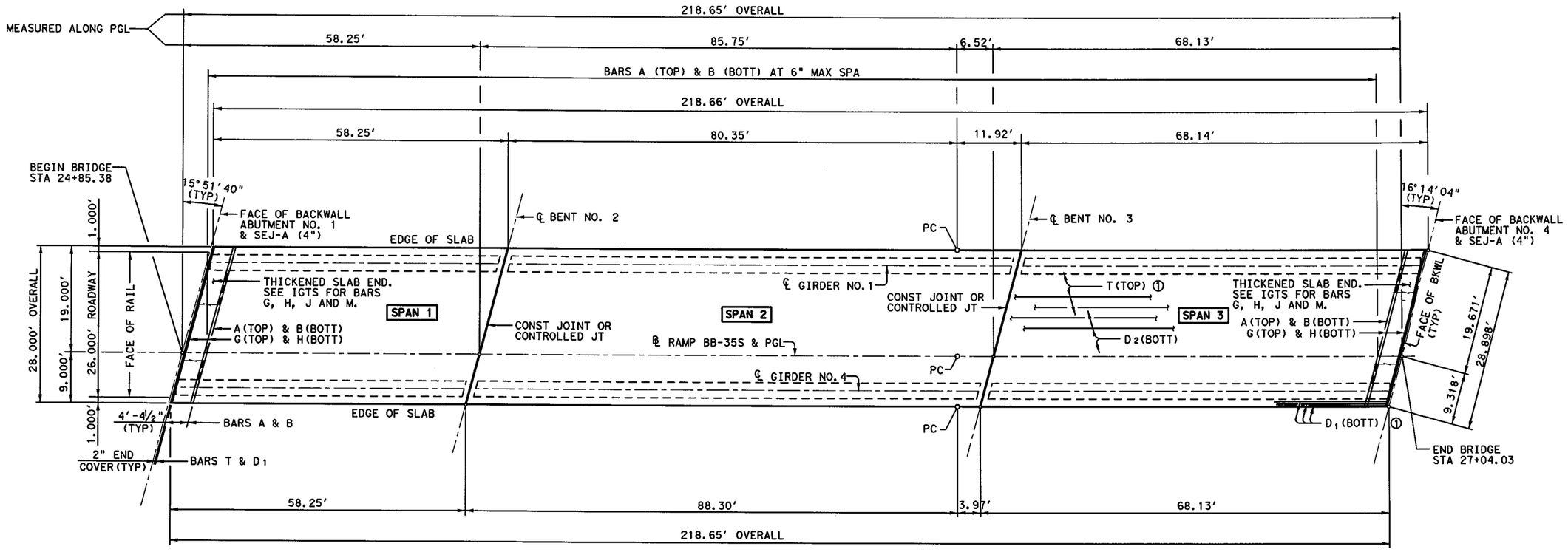

PLAN

① 2" END COVER ON BARS D1 AND T

7/11/12

STATE OF TEXAS
CORBETT L. FREEMAN
86913
LICENSED
PROFESSIONAL ENGINEER

HL 93 LOADING

I. S. ENGINEERS, LLC
TBPE REG. # F-11657

Texas Department of Transportation
© 2012

IH 35W FROM NORTH TARRANT PKWY TO IH 820

218.65' PRESTRESSED CONCRETE I-GIRDER UNIT
SB IH35W ENTR RAMP TO GP OVER BIG FOSSIL CREEK

SCALE: NTS — SHEET 1 OF 2

DESIGN	FED. RD. DIV. NO.	FEDERAL AID PROJECT NO.		HIGHWAY NO.
CLF	6	(SEE TITLE SHEET)		IH 35W
GRAPHICS: AXD	STATE	DISTRICT	COUNTY	SHEET NO.
CHECK: SB	TEXAS	FTW	TARRANT	
CHECK: CLF	CONTROL	SECTION	JOB	1728
	0014	16	255, ETC.	

FILENAME: S3BBR*BB-35S*PB*01.dgn
DRAWING DATE: 7/13/2012

TYPE Tx54 GIRDERS

SPAN NO.	GIRDER NO.	"A" FT	"B" FT
1	ALL	0.015	0.022
2	ALL	0.101	0.144
3	ALL	0.029	0.041

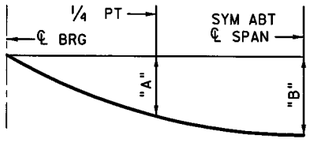

DEAD LOAD DEFLECTION DIAGRAM

CALCULATED DEFLECTIONS SHOWN ARE DUE TO THE CONCRETE SLAB ON INTERIOR GIRDERS ONLY (EC = 5000 KSI). ADJUST VALUES AS REQUIRED FOR EXTERIOR GIRDERS AND IF OPTIONAL SLAB FORMING IS USED. THESE VALUES MAY REQUIRE FIELD VERIFICATION.

TABLE OF SECTION DEPTHS

SPAN NO.	GIRDER NO.	"X" AT ℄ BRG	"Y" AT ℄ BRG	"Z" AT ℄ SPAN ②
1	ALL	11½"	4'-3½"	10½"
2	ALL	11½"	4'-3½"	9⅜"
3	ALL	11½"	4'-3½"	10⅞"

② THEORICAL DIMENSION

BAR TABLE

BAR	SIZE
A	#5
B	#5
D	#5
G	#5
H	#5
J	#5
M	#5
T	#4

TABLE OF ESTIMATED QUANTITIES

SPAN	REINF CONCRETE SLAB	PRESTR CONC I-GIRDERS (Tx54) ④	CLASS "S" CONCRETE	TOTAL REINF STEEL ③
NO.	SF	LF	CY	LB
1	1,631	230.96	48.8	10,602
2	2,584	367.08	76.3	16,793
3	1,908	270.51	56.9	12,400
TOTAL	6,122	868.55	182.0	39,795

③ REINFORCING STEEL WEIGHT IS CALCULATED USING AN APPROXIMATE FACTOR OF 6.5 LBS/SF.
④ LENGTHS SHOWN ARE BOTTOM OF GIRDER FLANGE LENGTHS WITH ADJUSTMENTS MADE FOR BEAM SLOPE. SEE GIRDER LAYOUT FOR GIRDER LENGTHS.

GENERAL NOTES:

1. DESIGNED ACCORDING TO AASHTO LRFD BRIDGE DESIGN SPECIFICATION, 5TH EDITION (2010).
2. SEE PCP OR PMDF STANDARDS FOR DETAILS AND QUANTITY ADJUSTMENTS IF EITHER OF THESE OPTION ARE USED.
3. SEE IGTS STANDARD FOR THICKENED SLAB END DETAILS.
4. ALL REINFORCING STEEL SHALL BE GRADE 60 AND EPOXY COATED.
5. CLASS "S" (HPC) CONCRETE STRENGTH F'C = 4,000 PSI.
6. BAR LAPS, WHERE REQUIRED, WILL BE AS FOLLOWS: EPOXY COATED #4 = 2'-1" #5 = 2'-7"

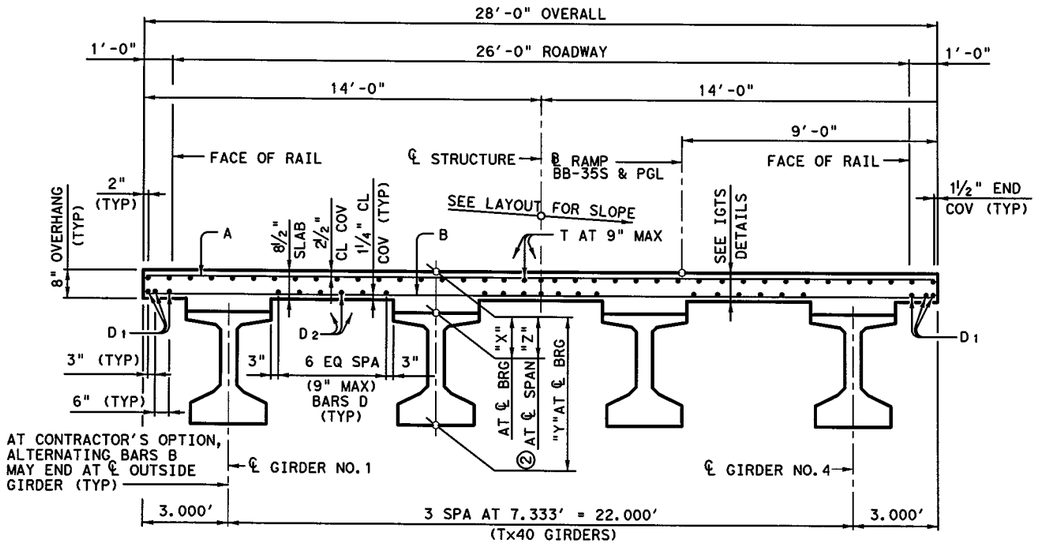

TYPICAL TRANSVERSE SECTION

HL 93 LOADING

I. S. ENGINEERS, LLC
TBPE REG. # F-11657

Texas Department of Transportation
© 2012

IH 35W FROM NORTH TARRANT PKWY TO IH 820

218.65' PRESTRESSED CONCRETE I-GIRDER UNIT

SB IH35W ENTR RAMP TO GP OVER BIG FOSSIL CREEK

SCALE: NTS — SHEET 2 OF 2

DESIGN	FED.RD. DIV.NO.	FEDERAL AID PROJECT NO.		HIGHWAY NO.
CLF	6	(SEE TITLE SHEET)		IH 35W
GRAPHICS AXD	STATE	DISTRICT	COUNTY	SHEET NO.
CHECK SB	TEXAS	FTW	TARRANT	
CHECK CLF	CONTROL	SECTION	JOB	1729
	0014	16	255, ETC.	

FILENAME: S3BBR*BB-35S*PB*02.dgn
DRAWING DATE: 7/13/2012

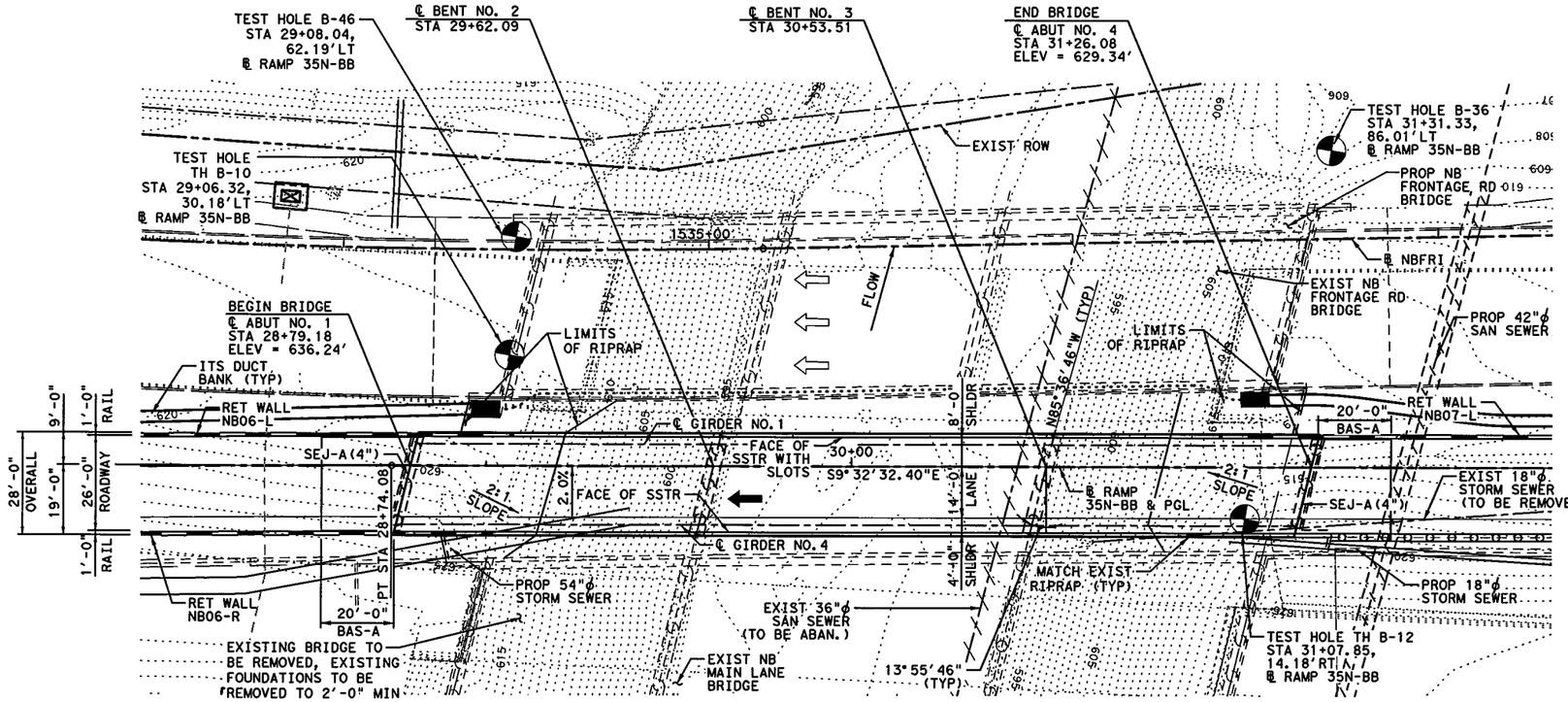

PLAN

0' 10' 20' 40'

SCALE IN FEET

GENERAL NOTES:

1. DESIGNED IN ACCORDANCE WITH 2010 AASHTO LRFD BRIDGE DESIGN SPECIFICATIONS.
2. ALL DIMENSIONS ARE EITHER HORIZONTAL OR VERTICAL AND MUST BE CORRECTED FOR GRADE, CROWN, AND/OR SUPER-ELEVATION.
3. "D" DENOTES BENTS WITH DOWEL BARS "D" AND SLOTTED HOLES AT ENDS OF EXTERIOR GIRDERS ONLY.
4. SEE "BORING LOGS - BRIDGE" SHEETS FOR GEOTECHNICAL INFORMATION.
5. FOR TYPICAL SECTION & BRIDGE RELATIONSHIPS SEE "TYPICAL SECTION" SHEET.
6. CONTRACTOR TO VERIFY LOCATION OF ALL UTILITIES PRIOR TO EXCAVATION.
7. SIDE SLOT DRAINS FOR SSTR RAIL SHALL NOT BE LOCATED WITHIN 6' OF ℄ BENT.
8. ALLOWANCE FOR FUTURE RESURFACING: 23.3 PSF.

EXIST NBI = 02-220-0-0014-16-463
NEW NBI = 02-220-0-0014-16-543
FUNCTIONAL CLASS = URBAN FREEWAY
DESIGN SPEED = 45 MPH
ADT = 7,800 (2030)

HL 93 LOADING

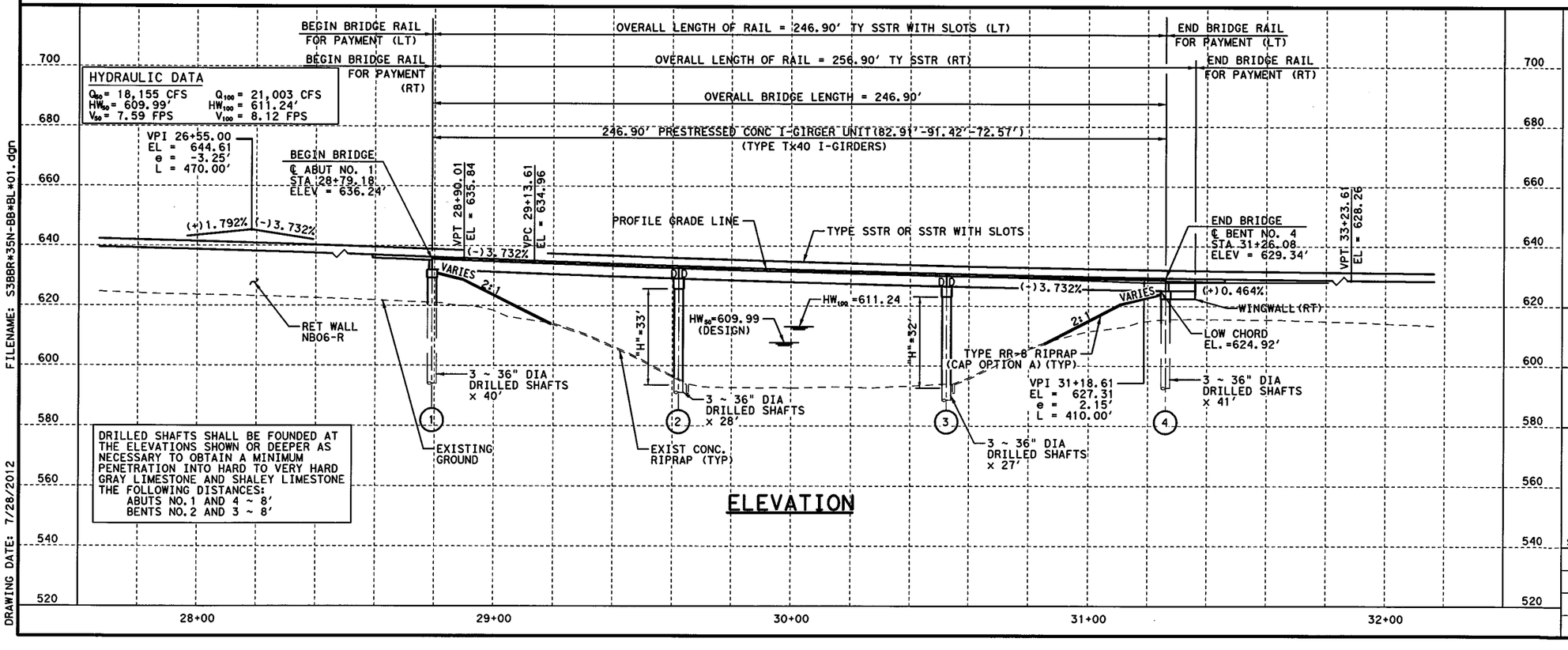

ELEVATION

7/28/12

STATE OF TEXAS
CORBETT L. FREEMAN
86913
LICENSED
PROFESSIONAL ENGINEER

I. S. ENGINEERS, LLC
TBPE REG. # F-11657

Texas Department of Transportation
© 2012

IH 35W FROM NORTH TARRANT PKWY TO IH 820

BRIDGE LAYOUT

NB IH35W EXIT RAMP FROM GP OVER BIG FOSSIL CREEK

SCALE: 1" = 40' H & V — SHEET 1 OF 1

DESIGN	FED.RD. DIV.NO.	FEDERAL AID PROJECT NO.		HIGHWAY NO.
CLF	6	(SEE TITLE SHEET)		IH 35W
GRAPHICS SPL	STATE	DISTRICT	COUNTY	SHEET NO.
CHECK SB	TEXAS	FTW	TARRANT	1730
CHECK CLF	CONTROL	SECTION	JOB	
	0014	16	255, ETC.	

FILENAME: S3BBR*35N-BB*BL*01.dgn
DRAWING DATE: 7/28/2012

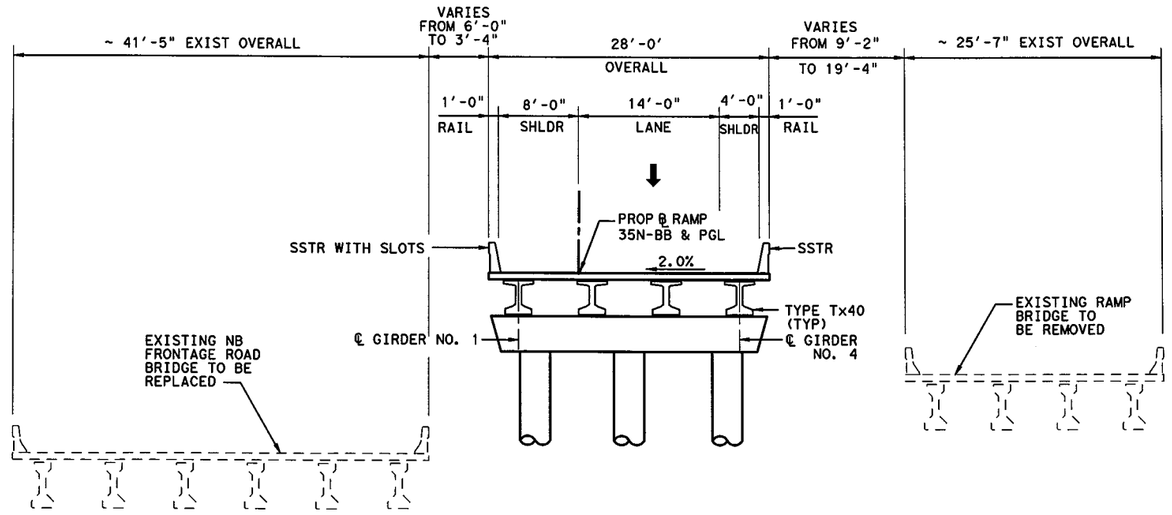

TYPICAL SECTION

(NTS)

NOTES:

FOR GENERAL NOTES, SEE "BRIDGE LAYOUT" SHEET.

7/13/12

STATE OF TEXAS
CORBETT L. FREEMAN
86913
LICENSED PROFESSIONAL ENGINEER

HL 93 LOADING

I. S. ENGINEERS, LLC
TBPE REG. # F-11657

Texas Department of Transportation
© 2012

IH 35W FROM NORTH TARRANT PKWY TO IH 820

BRIDGE TYPICAL SECTION

NB IH35W EXIT RAMP FROM GP OVER BIG FOSSIL CREEK

SCALE: NTS

SHEET 1 OF 1

DESIGN	FED.RD. DIV.NO.	FEDERAL AID PROJECT NO.		HIGHWAY NO.
CLF	6	(SEE TITLE SHEET)		IH 35W
GRAPHICS AXD	STATE	DISTRICT	COUNTY	SHEET NO.
CHECK SB	TEXAS	FTW	TARRANT	1731
CHECK CLF	CONTROL 0014	SECTION 16	JOB 255, ETC.	

DRAWING DATE: 7/13/2012 FILENAME: S3BBR*35N-BB*TS*01.dgn

SUMMARY OF ESTIMATED QUANTITIES

BID ITEM	416 2004	420 2041	420 2042	420 2256	422 2003	425 2066	428 2002	432 2002	450 2102	454 2001
BID ITEM DESCRIPTION / BRIDGE ELEMENT	DRILL SHAFT (36 IN)	CL C CONC (HPC) (ABUT)	CL C CONC (HPC) (BENT)	CL S CONC (HPC) (APPR SLAB)	REINF CONC SLAB (HPC) (CLS)	PRESTR CONC GIRDER (TX40)	CONC SURF TREATMENT (CLASS II)	RIPRAP (CONC) (5 IN)	RAIL (TYPE SSTR) (HPC)	SEALED EXPANSION JOINT (4 IN) (SEJ-A)
	LF	CY	CY	CY	SF	LF	SY	CY	LF	LF
2 - ABUTMENTS	243	28.1		47			88	42	10.0	55
2 - INTERIOR BENTS	165		75.8				61			
1 - 246.900' PRESTRESSED CONCRETE I-GIRDER UNIT (SPANS 1-3)					6,913	981.98	702		493.8	
TOTALS	408	28.1	75.8	47	6,913	981.98	851	42	503.8	55

BEARING SEAT ELEVATIONS

		BEAM 1	BEAM 2	BEAM 3	BEAM 4
ABUT 1	(FWD)	631.505	631.718	631.930	632.142
BENT 2	(BK)	628.614	628.819	629.025	629.232
	(FWD)	628.549	628.755	628.960	629.166
BENT 3	(BK)	626.088	626.277	626.466	626.655
	(FWD)	626.042	626.231	626.419	626.608
ABUT 4	(BK)	624.693	624.868	625.043	625.219

8/24/12

STATE OF TEXAS
CORBETT L. FREEMAN
86913
LICENSED
PROFESSIONAL ENGINEER

I. S. ENGINEERS, LLC
TBPE REG. # F-11657

Texas Department of Transportation
© 2012

IH 35W FROM NORTH TARRANT PKWY TO IH 820

EST. QUANTITIES AND BEARING SEAT ELEV.

NB IH35W EXIT RAMP FROM GP OVER BIG FOSSIL CREEK

SCALE: NTS — SHEET 1 OF 1

DESIGN	FED.RD. DIV.NO.	FEDERAL AID PROJECT NO.		HIGHWAY NO.
CLF	6	(SEE TITLE SHEET)		IH 35W
GRAPHICS: CLF	STATE	DISTRICT	COUNTY	SHEET NO.
CHECK: AXD/SB	TEXAS	FTW	TARRANT	1732
CHECK: CLF	CONTROL	SECTION	JOB	
	0014	16	255, ETC.	

DRAWING DATE: 8/24/2012 FILENAME: S3BBR*35N-BB*EQ*01.dgn

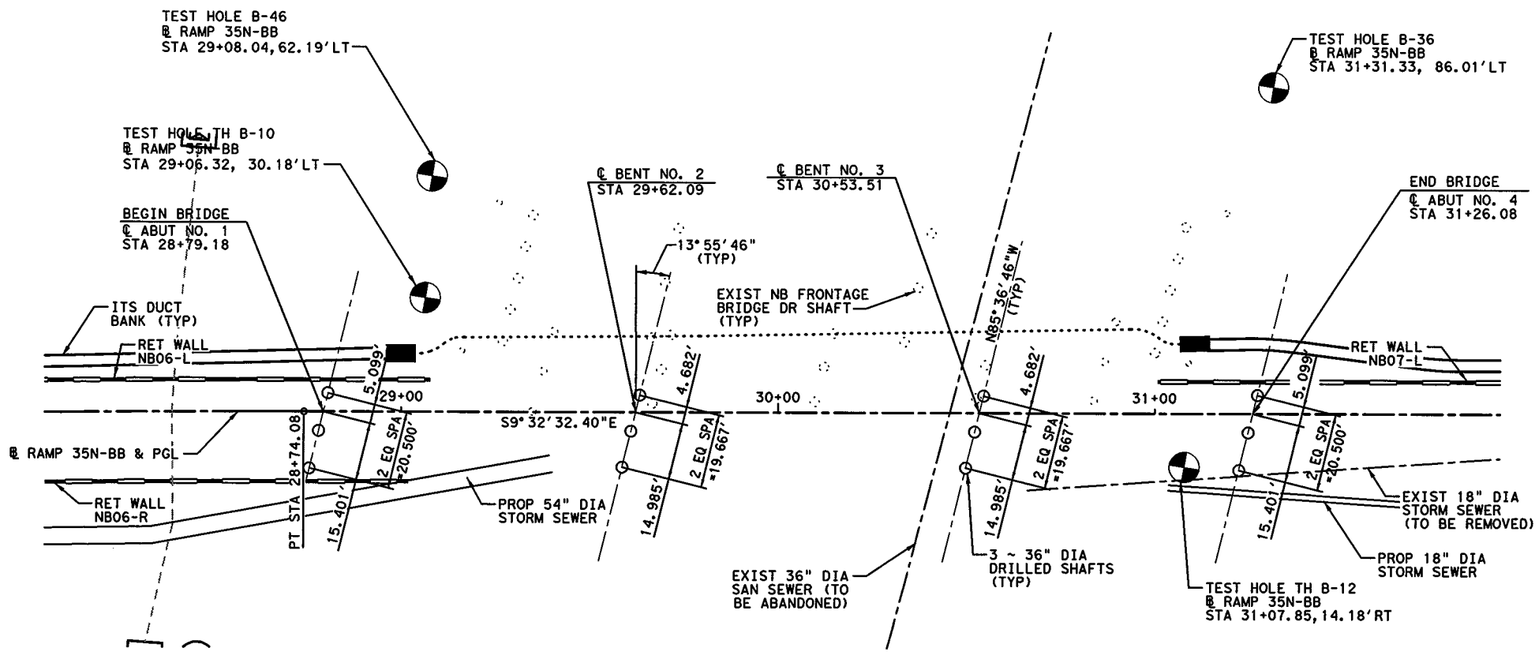

0' 10' 20' 40'

SCALE IN FEET

GENERAL NOTES:

1. FOR ANY TEMPORARY SHORING REQUIRED AT INTERIOR BENT LOCATIONS, FOLLOW TxDOT STANDARD SPECIFICATION ITEM 403.
2. SEE SOIL "BORING LOGS - BRIDGE" SHEETS FOR TEST HOLE INFORMATION.
3. ● DENOTES TEST HOLE LOCATION.
4. CONTRACTOR TO VERIFY LOCATION OF ALL UTILITIES PRIOR TO EXCAVATION.

7/28/12

STATE OF TEXAS
CORBETT L. FREEMAN
86913
LICENSED
PROFESSIONAL ENGINEER

HL 93 LOADING

I. S. ENGINEERS, LLC
TBPE REG. # F-11657

Texas Department of Transportation
© 2012

IH 35W FROM NORTH TARRANT PKWY TO IH 820

FOUNDATION LAYOUT
NB IH35W EXIT RAMP FROM GP OVER BIG FOSSIL CREEK

SCALE: 1" = 40' SHEET 1 OF 1

DESIGN	FED.RD. DIV.NO.	FEDERAL AID PROJECT NO.		HIGHWAY NO.
CLF	6	(SEE TITLE SHEET)		IH 35W
GRAPHICS SPL	STATE	DISTRICT	COUNTY	SHEET NO.
CHECK SB	TEXAS	FTW	TARRANT	1733
CHECK CLF	CONTROL	SECTION	JOB	
	0014	16	255, ETC.	

DRAWING DATE: 7/28/2012 FILENAME: S3BBR*35N-BB*FL*01.dgn

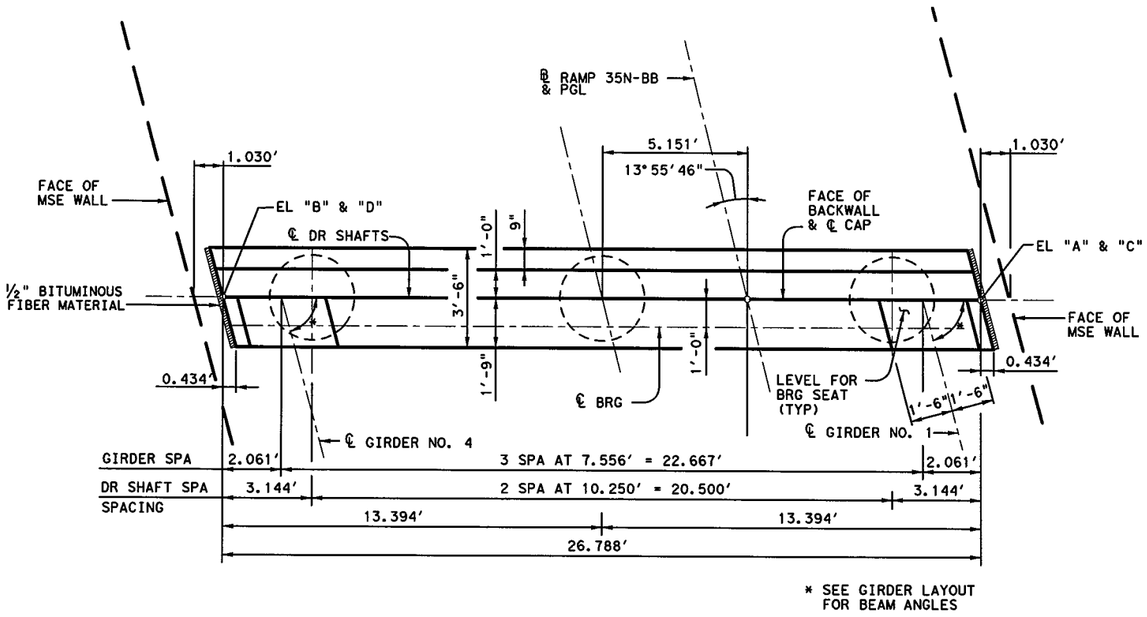

PLAN

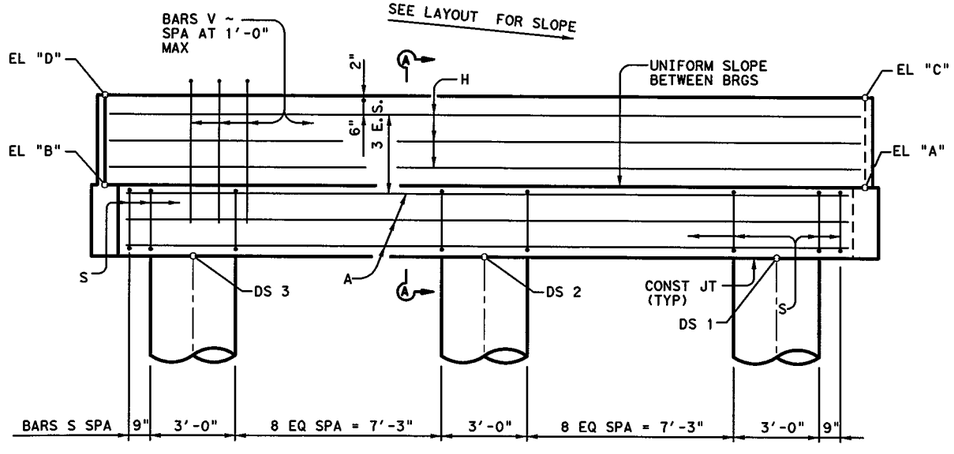

ELEVATION

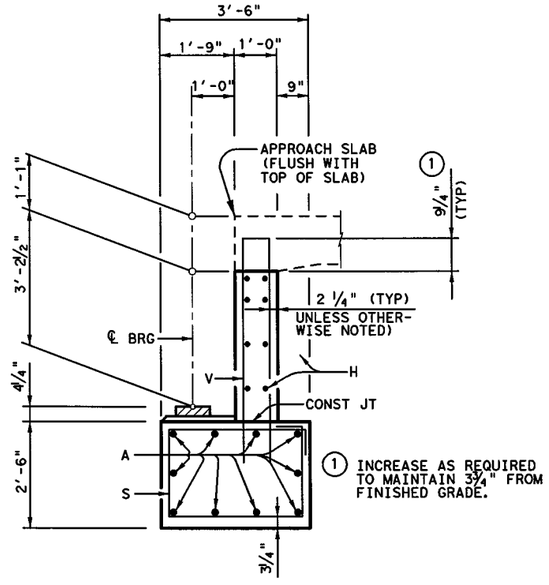

SECTION A-A

TABLE OF ELEVATIONS				
	"A"	"B"	"C"	"D"
CAP	631.329	632.082	634.892	635.645
DRILL SHAFT	DS 1	DS 2	DS 3	
	628.917	629.205	629.494	
DS TIP	588.917	589.205	589.494	
AS-BUILT DS TIP				

GENERAL NOTES:

DESIGNED ACCORDING TO AASHTO LRFD SPECIFICATIONS, 5TH EDITION (2010).

CLASS"C"(HPC) CONCRETE STRENGTH F'C = 3,600 PSI.

ALL CAP AND WALL REINFORCING SHALL BE GRADE 60.

SEE FD STANDARD FOR ALL FOUNDATION DETAILS AND NOTES.

CALCULATED FOUNDATION LOADS:
CAP DRILLED SHAFTS = 127 TONS/D.S.

7/11/12

STATE OF TEXAS
CORBETT L. FREEMAN
86913
LICENSED PROFESSIONAL ENGINEER

HL 93 LOADING

I.S. ENGINEERS, LLC
TBPE REG. # F-11657

Texas Department of Transportation
© 2012

IH 35W FROM NORTH TARRANT PKWY TO IH 820

ABUTMENT NO. 1

NB IH35W EXIT RAMP FROM GP OVER BIG FOSSIL CREEK

SCALE: NTS — SHEET 1 OF 1

DESIGN	FED. RD. DIV. NO.	FEDERAL AID PROJECT NO.		HIGHWAY NO.
ZFS	6	(SEE TITLE SHEET)		IH 35W
GRAPHICS AXD	STATE	DISTRICT	COUNTY	SHEET NO.
CHECK SB	TEXAS	FTW	TARRANT	
CHECK CLF	CONTROL	SECTION	JOB	1734
	0014	16	255, ETC.	

DRAWING DATE: 7/13/2012 FILENAME: S3BBR*35N-BB*AB*01.dgn

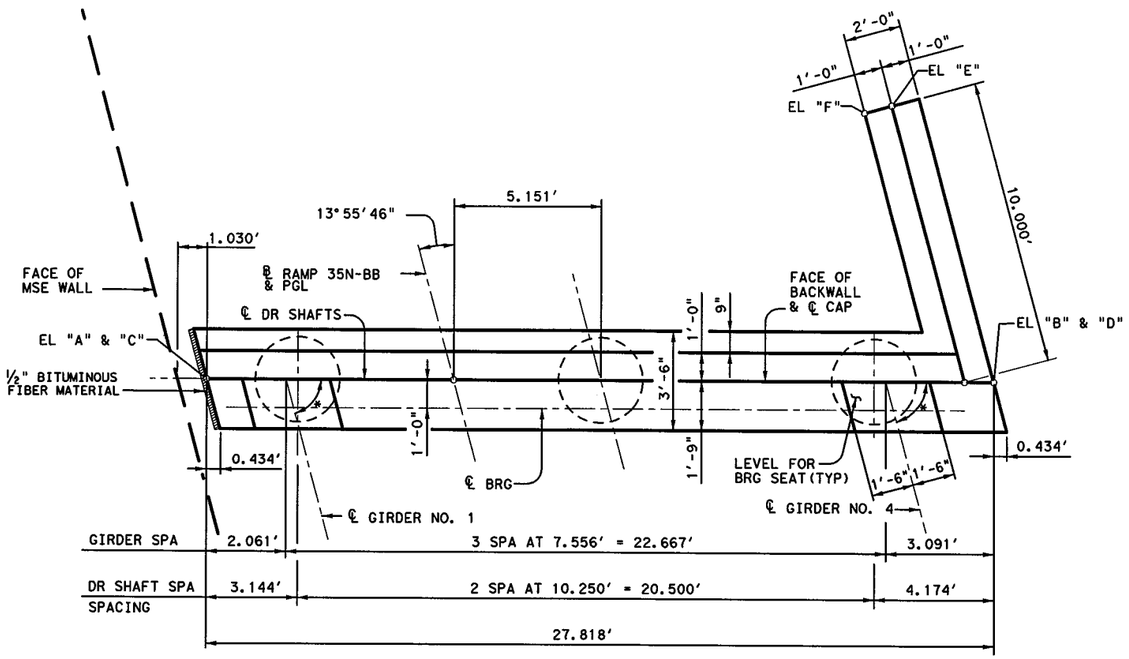

PLAN

* SEE GIRDER LAYOUT FOR BEAM ANGLES

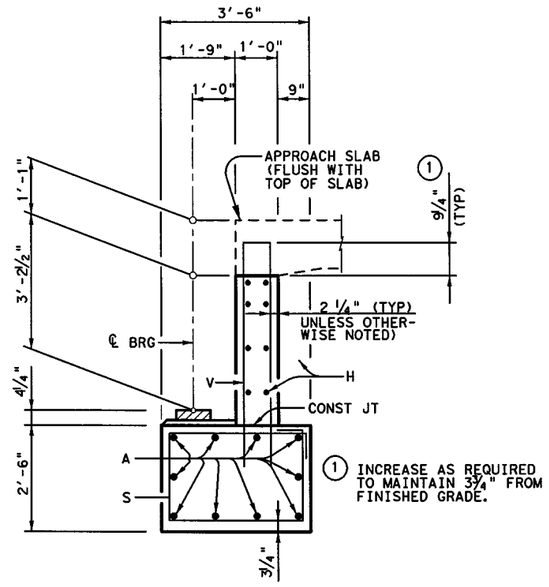

SECTION A-A

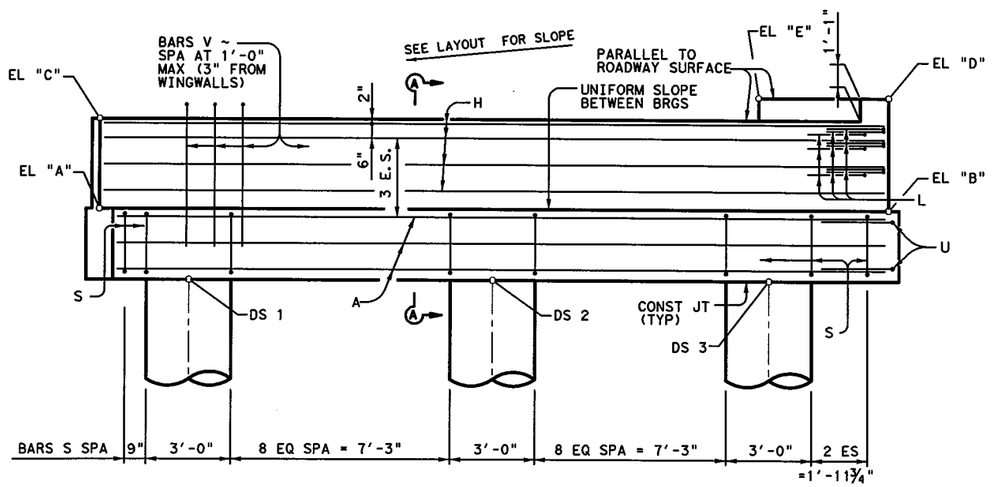

ELEVATION

TABLE OF ELEVATIONS				
CAP	"A"	"B"	"C"	"D"
	624.514	625.160	628.077	629.806
WING WALL	"E"	"F"		
	629.854	625.208		
DRILL SHAFT	DS 1	DS 2	DS 3	
	622.087	622.325	622.563	
DS TIP	581.087	581.325	581.563	
AS-BUILT DS TIP				

GENERAL NOTES:

DESIGNED ACCORDING TO AASHTO LRFD SPECIFICATIONS, 5TH EDITION (2010).

CLASS"C" (HPC) CONCRETE STRENGTH F'C = 3,600 PSI.

ALL CAP AND WALL REINFORCING SHALL BE GRADE 60.

SEE FD STANDARD FOR ALL FOUNDATION DETAILS AND NOTES.

SEE RAIL STANDARD FOR ALL ANCHORAGE IN WINGWALLS.

CALCULATED FOUNDATION LOADS:
CAP DRILLED SHAFTS = 127 TONS/D.S.

7/11/12

STATE OF TEXAS
CORBETT L. FREEMAN
86913
LICENSED
PROFESSIONAL ENGINEER

HL 93 LOADING

I. S. ENGINEERS, LLC
TBPE REG. # F-11657

Texas Department of Transportation
© 2012

IH 35W FROM NORTH TARRANT PKWY TO IH 820

ABUTMENT NO. 4

NB IH35W EXIT RAMP FROM GP OVER BIG FOSSIL CREEK

SCALE: NTS — SHEET 1 OF 1

DESIGN	FED.RD. DIV.NO.	FEDERAL AID PROJECT NO.		HIGHWAY NO.
ZFS	6	(SEE TITLE SHEET)		IH 35W
GRAPHICS AXD	STATE	DISTRICT	COUNTY	SHEET NO.
CHECK SB	TEXAS	FTW	TARRANT	
CHECK CLF	CONTROL	SECTION	JOB	1735
	0014	16	255, ETC.	

DRAWING DATE: 7/13/2012 FILENAME: S38BR*35N-BB*AB*02.dgn

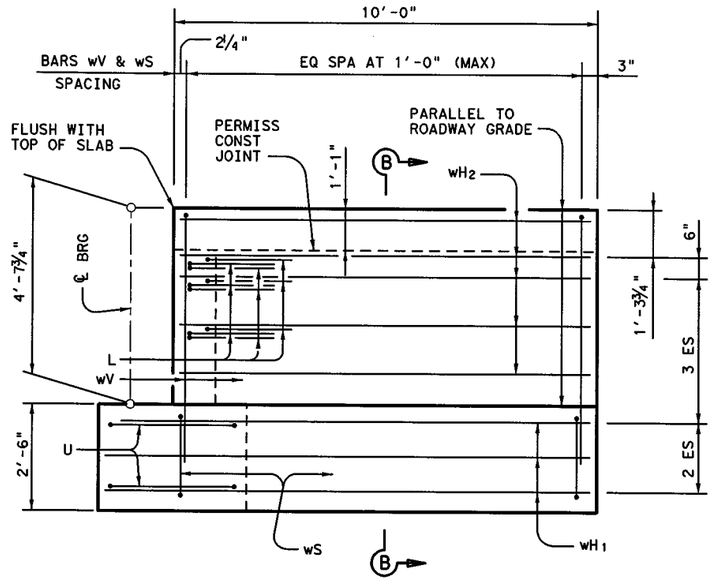

WINGWALL ELEVATION

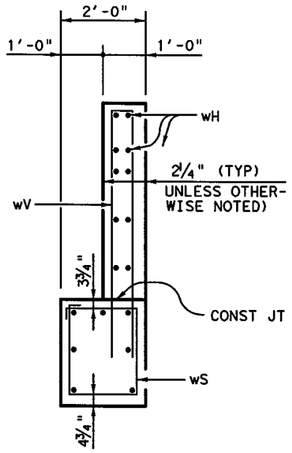

SECTION B-B

TABLES OF ESTIMATED QUANTITIES

ABUTMENT 1 (NO WINGWALL)

BAR	NO.	SIZE	LENGTH	WEIGHT
A	10	#11	26'-3"	1,394
H	8	#6	26'-6"	318
S	22	#5	11'-4"	260
U	4	#6	8'-1"	49
V	28	#5	11'-10"	346
REINFORCING STEEL			LB	2,367
CL "C" CONCRETE (HPC) (ABUT)			CY	12.3

ABUTMENT 4 (ONE WINGWALL)

BAR	NO.	SIZE	LENGTH	WEIGHT
A	10	#11	27'-1"	1,439
H	8	#6	27'-6"	330
L	9	#6	4'-0"	54
S	23	#5	11'-4"	272
U	4	#6	8'-1"	49
V	28	#5	11'-10"	346
wH_1	7	#6	11'-5"	120
wH_2	10	#6	9'-8"	145
wS	11	#4	7'-8"	56
wV	11	#5	12'-1"	139
REINFORCING STEEL			LB	2,950
CL "C" CONCRETE (HPC) (ABUT)			CY	15.8

THE FRONT AND BACK, BACKWALL FACES, SIDES, AND TOP, EXCEPT UNDER BEARING AREAS, SHALL BE TREATED WITH A "CLASS II, TYPE I PENETRATING CONCRETE SURFACE TREATMENT".

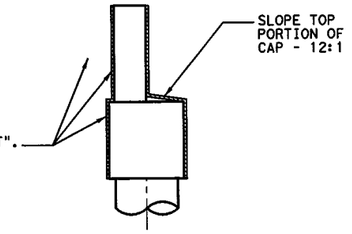

CONCRETE SURFACE TREATMENT DETAIL FOR ABUTMENT

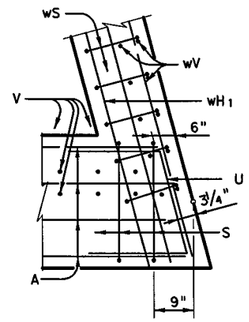

CAP

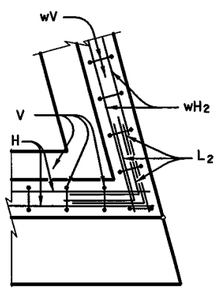

BACKWALL

CORNER DETAILS

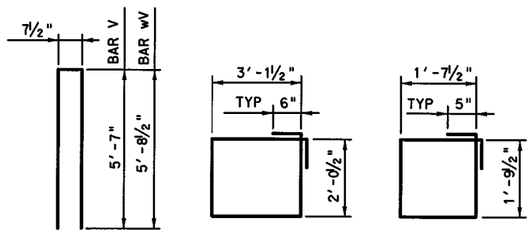

BARS V & wV BARS S BARS wS

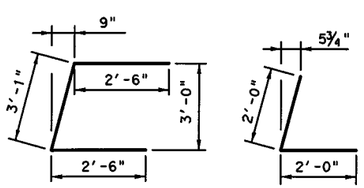

BARS U BARS L

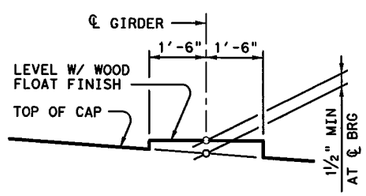

BEARING SEAT DETAIL

(BEARING SURFACE MUST BE CLEAN AND FREE OF ALL LOOSE MATERIAL BEFORE PLACING BEARING PAD.)

HL 93 LOADING

I. S. ENGINEERS, LLC
TBPE REG. # F-11657

Texas Department of Transportation
© 2012

IH 35W FROM NORTH TARRANT PKWY TO IH 820

MISCELLANEOUS ABUTMENT DETAILS

NB IH35W EXIT RAMP FROM GP OVER BIG FOSSIL CREEK

SCALE: NTS SHEET 1 OF 1

DESIGN	FED.RD. DIV.NO.	FEDERAL AID PROJECT NO.		HIGHWAY NO.
ZFS	6	(SEE TITLE SHEET)		IH 35W
GRAPHICS AXD	STATE	DISTRICT	COUNTY	SHEET NO.
CHECK SB	TEXAS	FTW	TARRANT	
CHECK CLF	CONTROL	SECTION	JOB	1736
	0014	16	255, ETC.	

CORBETT L. FREEMAN 86913 LICENSED PROFESSIONAL ENGINEER STATE OF TEXAS

7/13/12

DRAWING DATE: 7/13/2012 FILENAME: S38BR*35N-BB*AB*03.dgn

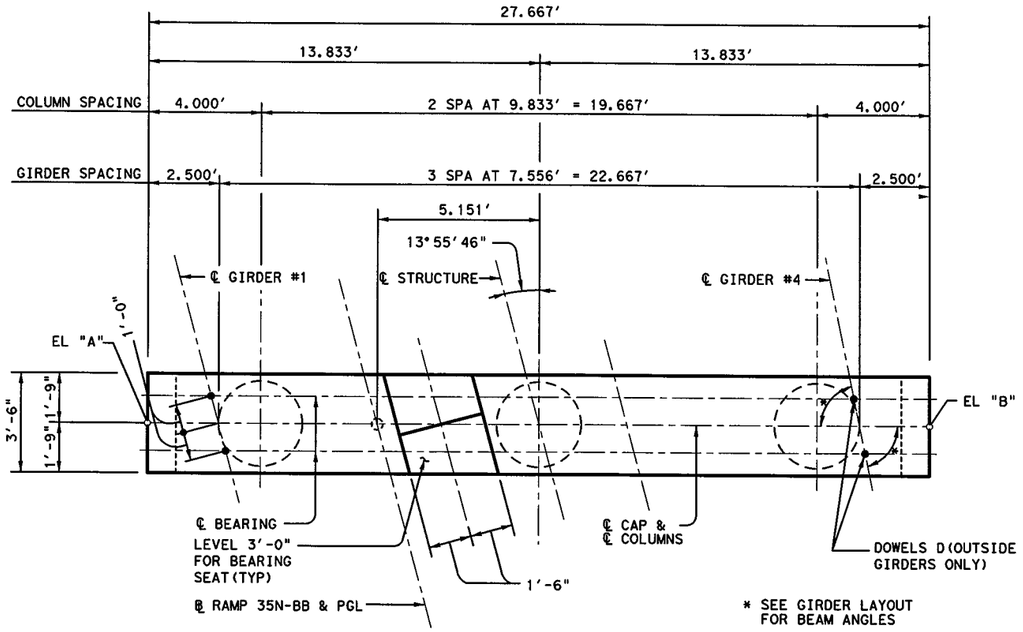

PLAN

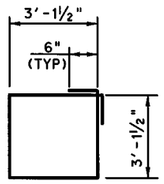

BARS S

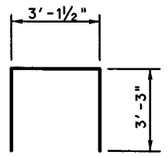

BARS U

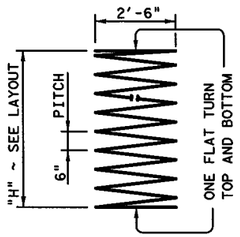

BARS Z

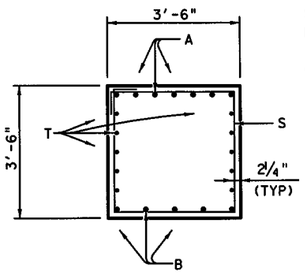

SECTION A-A

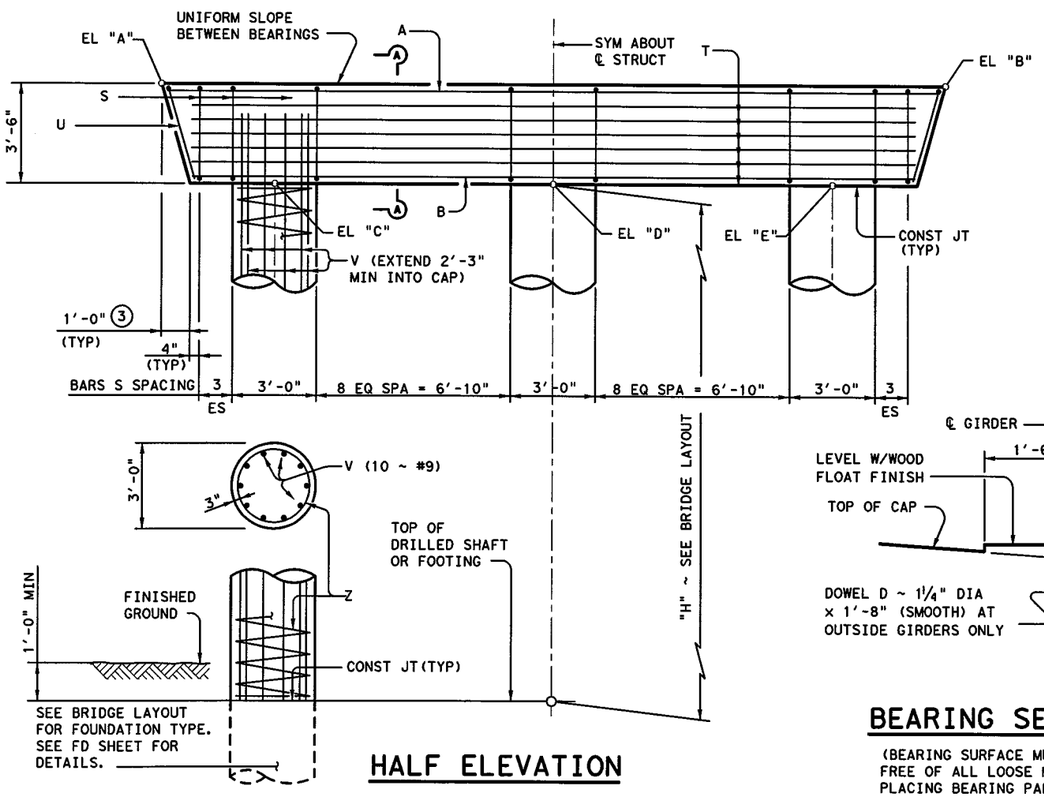

HALF ELEVATION

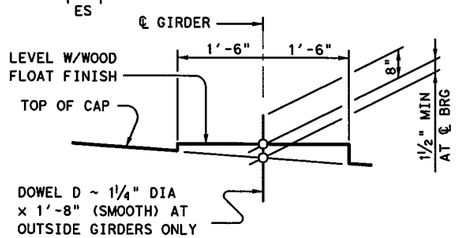

BEARING SEAT DETAIL

(BEARING SURFACE MUST BE CLEAN AND FREE OF ALL LOOSE MATERIAL BEFORE PLACING BEARING PAD.)

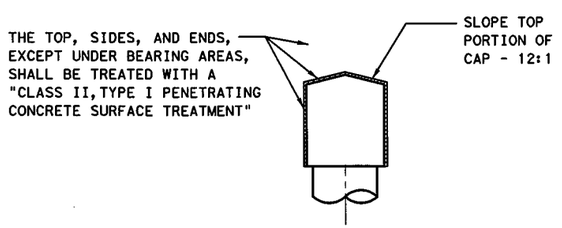

CONCRETE SURFACE TREATMENT DETAIL FOR INTERIOR BENT

① TABLE OF COLUMN QUANTITIES

BENT	"H"	CL. "C" CONC. (HPC) (COL)	BARS V 30 ~ #9		BARS Z 3 ~ #3 SPIRAL	
NO.	FT	CY	LENGTH	WT.	LENGTH	WT.
2	33	25.9	35'-3"	3,596	535'-2"	604
3	32	25.1	34'-3"	3,494	519'-5"	586

①② TOTAL ESTIMATED QUANTITIES

REINF. STEEL	CL. "C" CONC. (HPC) (BENT)
LB	CY
6,568	38.3
6,448	37.5

TABLE OF CONSTANT QUANTITIES ②

BAR	NO.	SIZE	LENGTH	WEIGHT
A	7	#11	27'- 4"	1,017
B	5	#11	25'- 4"	673
D	4	1 ¼"D	1'- 8"	28
S	26	#5	13'- 6"	366
T	10	#5	25'- 4"	264
U	2	#5	9'- 8"	20
REINFORCING STEEL			LB	2,368
CL "C" CONCRETE (HPC) (CAP)			CY	12.4

TABLE OF ELEVATIONS ~ BENT 2

CAP	"A"	"B"	"C"	"D"	"E"
	628.363	629.116	624.972	625.239	625.507
TOP OF DRILLED SHAFT*			DS 1	DS 2	DS 3
			591.972	592.239	592.507
DRILLED SHAFT TIP			563.972	564.239	564.507
AS-BUILT DRILLED SHAFT TIP					

TABLE OF ELEVATIONS ~ BENT 3

CAP	"A"	"B"	"C"	"D"	"E"
	625.861	626.552	622.461	622.706	622.952
TOP OF DRILLED SHAFT*			DS 1	DS 2	DS 3
			590.461	590.706	590.952
DRILLED SHAFT TIP			563.461	563.706	563.952
AS-BUILT DRILLED SHAFT TIP					

* TOP OF DRILLED SHAFT ELEVATIONS WERE ESTIMATED BASED ON GROUND ELEVATION INFORMATION AVAILABLE AT THE TIME OF DESIGN. CONTRACTOR SHALL CONFIRM THESE ELEVATIONS PRIOR TO DRILLING.

① FOR EACH LINEAR FOOT VARIATION IN "H" VALUE, MAKE THE FOLLOWING ADJUSTMENTS:
BARS V LENGTH, 1'-0"
BARS Z LENGTH, 15.740'
REINFORCING STEEL, 120 LB
CLASS "C" CONC (COL), 0.785 CY

② QUANTITIES SHOWN ARE FOR ONE BENT ONLY.

③ MEASURED PARALLEL TO TOP OF CAP CROSS-SLOPE.

GENERAL NOTES:

DESIGNED ACCORDING TO AASHTO LRFD SPECIFICATIONS, 5TH EDITION (2010).

CLASS "C" (HPC) CONCRETE STRENGTH F'C = 3,600 PSI.

ALL REINFORCING SHALL BE GRADE 60.

SEE FD STANDARD FOR ALL FOUNDATION DETAILS AND NOTES.

CALCULATED FOUNDATION LOAD: 214 TONS / D.S.

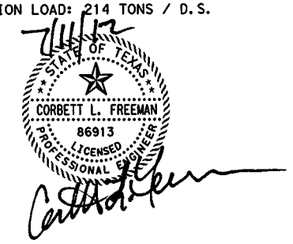

HL 93 LOADING

I. S. ENGINEERS, LLC
TBPE REG. # F-11657

Texas Department of Transportation
© 2012

IH 35W FROM NORTH TARRANT PKWY TO IH 820

INTERIOR BENTS NO. 2 & 3

NB IH35W EXIT RAMP FROM GP OVER BIG FOSSIL CREEK

SCALE: NTS — SHEET 1 OF 1

DESIGN	FED.RD. DIV.NO.	FEDERAL AID PROJECT NO.		HIGHWAY NO.
ZFS	6	(SEE TITLE SHEET)		IH 35W
GRAPHICS SPL	STATE	DISTRICT	COUNTY	SHEET NO.
CHECK SB	TEXAS	FTW	TARRANT	
CHECK CLF	CONTROL	SECTION	JOB	1737
	0014	16	255, ETC.	

DRAWING DATE: 7/13/2012 FILENAME: S3BBR*35N-BB*1B*01.dgn

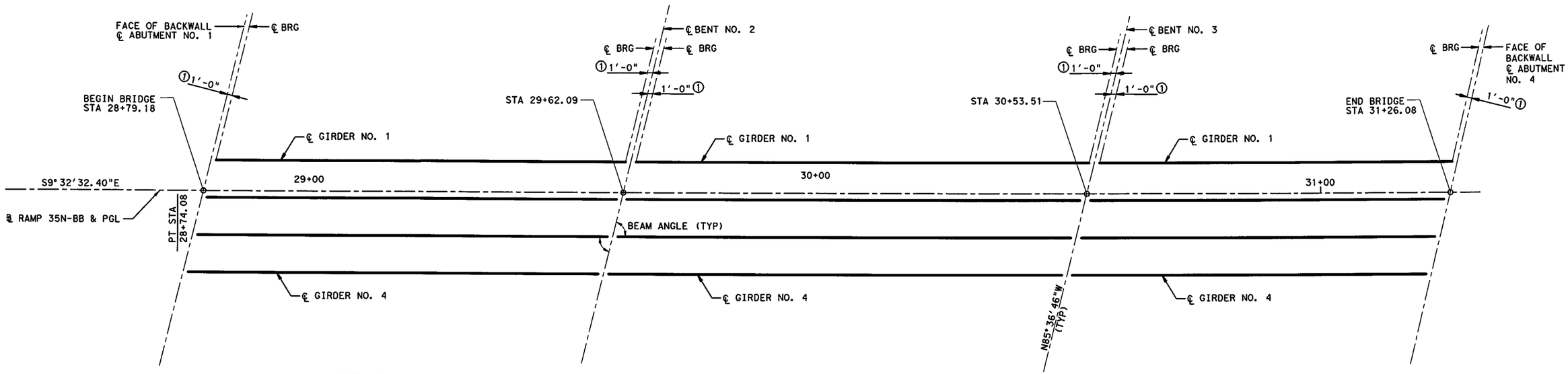

SPAN 1
(TX40 GIRDERS)

SPAN 2
(TX40 GIRDERS)

SPAN 3
(TX40 GIRDERS)

BENT REPORT

				DISTANCE BETWEEN STATION LINE AND BEAM 1 (C.L. BENT)	BEAM ANGLE D	M	S
BENT NO. 1 (N 85 36 46.00 W) 6.182 L							
SPAN	1	BEAM	1	0.000	76	4	13
		BEAM	2	7.556	76	4	13
		BEAM	3	7.556	76	4	13
		BEAM	4	7.556	76	4	13
		TOTAL		22.667			
BENT NO. 2 (N 85 36 46.00 W) 6.182 L							
SPAN	1	BEAM	1	0.000	76	4	13
		BEAM	2	7.556	76	4	13
		BEAM	3	7.556	76	4	13
		BEAM	4	7.556	76	4	13
		TOTAL		22.667			
SPAN	2	BEAM	1	0.000	76	4	13
		BEAM	2	7.556	76	4	13
		BEAM	3	7.556	76	4	13
		BEAM	4	7.556	76	4	13
		TOTAL		22.667			
BENT NO. 3 (N 85 36 46.00 W) 6.182 L							
SPAN	2	BEAM	1	0.000	76	4	13
		BEAM	2	7.556	76	4	13
		BEAM	3	7.556	76	4	13
		BEAM	4	7.556	76	4	13
		TOTAL		22.667			
SPAN	3	BEAM	1	0.000	76	4	13
		BEAM	2	7.556	76	4	13
		BEAM	3	7.556	76	4	13
		BEAM	4	7.556	76	4	13
		TOTAL		22.667			
BENT NO. 4 (N 85 36 46.00 W) 6.182 L							
SPAN	3	BEAM	1	0.000	76	4	13
		BEAM	2	7.556	76	4	13
		BEAM	3	7.556	76	4	13
		BEAM	4	7.556	76	4	13
		TOTAL		22.667			

BEAM REPORT

	C-C BENT	HORIZONTAL DISTANCE C-C BRG.	TRUE DISTANCE② BOT. BM. FLG.	
BEAM 1	82.910	80.880	82.46	-0.0357
BEAM 2	82.910	80.880	82.46	-0.0358
BEAM 3	82.910	80.880	82.46	-0.0359
BEAM 4	82.910	80.880	82.46	-0.0360

BEAM REPORT, SPAN 2

	C-C BENT	HORIZONTAL DISTANCE C-C BRG.	TRUE DISTANCE② BOT. BM. FLG.	
BEAM 1	91.420	89.420	90.95	-0.0275
BEAM 2	91.420	89.420	90.95	-0.0277
BEAM 3	91.420	89.420	90.96	-0.0279
BEAM 4	91.420	89.420	90.96	-0.0281

BEAM REPORT, SPAN 3

	C-C BENT	HORIZONTAL DISTANCE C-C BRG.	TRUE DISTANCE② BOT. BM. FLG.	
BEAM 1	72.570	70.540	72.08	-0.0191
BEAM 2	72.570	70.540	72.08	-0.0193
BEAM 3	72.570	70.540	72.08	-0.0195
BEAM 4	72.570	70.540	72.08	-0.0197

① SEE IGEB STANDARD FOR ORIENTATION OF DIMENSION.

② GIRDER LENGTHS SHOWN ARE BOTTOM OF GIRDER FLANGE LENGTHS WITH ADJUSTMENTS MADE FOR BEAM SLOPE.

7/11/12

STATE OF TEXAS
CORBETT L. FREEMAN
86913
LICENSED
PROFESSIONAL ENGINEER

HL 93 LOADING

I. S. ENGINEERS, LLC
TBPE REG. # F-11657

Texas Department of Transportation
© 2012

IH 35W FROM NORTH TARRANT PKWY TO IH 820

GIRDER LAYOUT (SPANS 1-3)
NB IH35W EXIT RAMP FROM GP OVER BIG FOSSIL CREEK

SCALE: 1" = 20' SHEET 1 OF 1

DESIGN	FED.RD. DIV.NO.	FEDERAL AID PROJECT NO.		HIGHWAY NO.
CLF	6	(SEE TITLE SHEET)		IH 35W
GRAPHICS SPL	STATE	DISTRICT	COUNTY	SHEET NO.
CHECK SB	TEXAS	FTW	TARRANT	
CHECK CLF	CONTROL 0014	SECTION 16	JOB 255, ETC.	1738

DRAWING DATE: 7/13/2012 FILENAME: S3BBR*35N-BB*GF*01.dgn

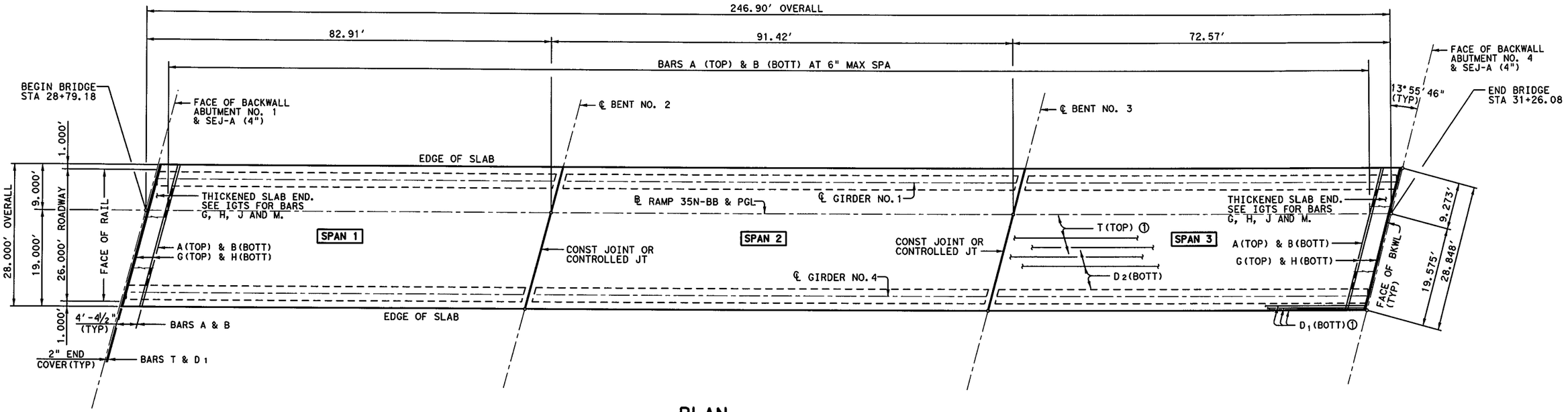

PLAN

① 2" END COVER ON BARS D1 AND T

7/11/12

STATE OF TEXAS
CORBETT L. FREEMAN
86913
LICENSED
PROFESSIONAL ENGINEER

HL 93 LOADING

I. S. ENGINEERS, LLC
TBPE REG. # F-11657

Texas Department of Transportation
© 2012

IH 35W FROM NORTH TARRANT PKWY TO IH 820

246.90' PRESTRESSED CONCRETE I-GIRDER UNIT

NB IH35W EXIT RAMP FROM GP OVER BIG FOSSIL CREEK

SCALE: NTS — SHEET 1 OF 2

DESIGN	FED.RD. DIV.NO.	FEDERAL AID PROJECT NO.		HIGHWAY NO.
CLF	6	(SEE TITLE SHEET)		IH 35W
GRAPHICS SPL	STATE	DISTRICT	COUNTY	SHEET NO.
CHECK SB	TEXAS	FTW	TARRANT	1739
CHECK CLF	CONTROL	SECTION	JOB	
	0014	16	255, ETC.	

DRAWING DATE: 7/13/2012 FILENAME: S3BBR*35N-BB*PB*01.dgn

TYPE Tx40 GIRDERS

SPAN NO.	GIRDER NO.	"A" FT	"B" FT
1	ALL	0.065	0.093
2	ALL	0.097	0.138
3	ALL	0.038	0.054

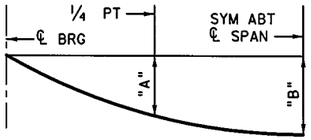

DEAD LOAD DEFLECTION DIAGRAM

CALCULATED DEFLECTIONS SHOWN ARE DUE TO THE CONCRETE SLAB ON INTERIOR GIRDERS ONLY (EC = 5000 KSI). ADJUST VALUES AS REQUIRED FOR EXTERIOR GIRDERS AND IF OPTIONAL SLAB FORMING IS USED. THESE VALUES MAY REQUIRE FIELD VERIFICATION.

TABLE OF SECTION DEPTHS

SPAN NO.	GIRDER NO.	"X" AT ℄ BRG	"Y" AT ℄ BRG	"Z" AT ℄ SPAN ②
1	ALL	11½"	4'-3½"	10¼"
2	ALL	11½"	4'-3½"	9½"
3	ALL	11½"	4'-3½"	10¼"

② THEORICAL DIMENSION

BAR TABLE

BAR	SIZE
A	#5
B	#5
D	#5
G	#5
H	#5
J	#5
M	#5
T	#4

TABLE OF ESTIMATED QUANTITIES

SPAN	REINF CONCRETE SLAB	PRESTR CONC I-GIRDERS (Tx40) ④	CLASS "S" CONCRETE	TOTAL REINF STEEL ③
NO.	SF	LF	CY	LB
1	2,321	329.84	69.2	15,090
2	2,560	363.82	75.6	16,638
3	2,032	288.32	60.6	13,208
TOTAL	6,913	981.98	205.3	44,936

③ REINFORCING STEEL WEIGHT IS CALCULATED USING AN APPROXIMATE FACTOR OF 6.5 LBS/SF.
④ LENGTHS SHOWN ARE BOTTOM OF GIRDER FLANGE LENGTHS WITH ADJUSTMENTS MADE FOR BEAM SLOPE. SEE GIRDER LAYOUT FOR GIRDER LENGTHS.

GENERAL NOTES:

1. DESIGNED ACCORDING TO AASHTO LRFD BRIDGE DESIGN SPECIFICATION, 5TH EDITION (2010).
2. SEE PCP OR PMDF STANDARDS FOR DETAILS AND QUANTITY ADJUSTMENTS IF EITHER OF THESE OPTION ARE USED.
3. SEE IGTS STANDARD FOR THICKENED SLAB END DETAILS.
4. ALL REINFORCING STEEL SHALL BE GRADE 60 AND EPOXY COATED.
5. CLASS "S" (HPC) CONCRETE STRENGTH F'C = 4,000 PSI.
6. BAR LAPS, WHERE REQUIRED, WILL BE AS FOLLOWS: EPOXY COATED #4 = 2'-1"
   #5 = 2'-7"

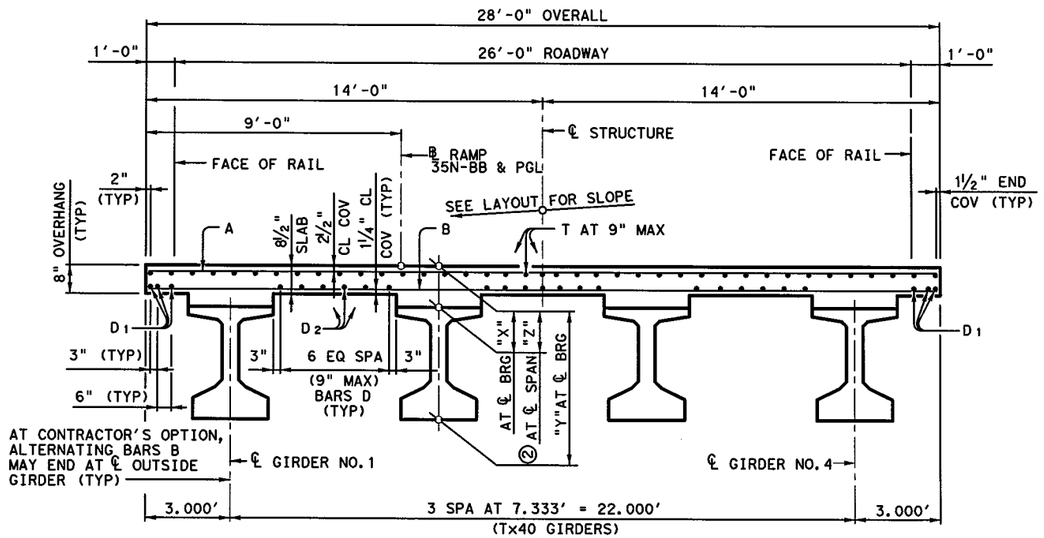

TYPICAL TRANSVERSE SECTION

7/11/12
STATE OF TEXAS
CORBETT L. FREEMAN
86913
LICENSED PROFESSIONAL ENGINEER

HL 93 LOADING

I. S. ENGINEERS, LLC
TBPE REG. # F-11657

Texas Department of Transportation
© 2012

IH 35W FROM NORTH TARRANT PKWY TO IH 820

246.90' PRESTRESSED CONCRETE I-GIRDER UNIT

NB IH35W EXIT RAMP FROM GP OVER BIG FOSSIL CREEK

SCALE: NTS — SHEET 2 OF 2

DESIGN	FED.RD. DIV.NO.	FEDERAL AID PROJECT NO.		HIGHWAY NO.
CLF	6	(SEE TITLE SHEET)		IH 35W
GRAPHICS AXD	STATE	DISTRICT	COUNTY	SHEET NO.
CHECK SB	TEXAS	FTW	TARRANT	
CHECK CLF	CONTROL	SECTION	JOB	1740
	0014	16	255, ETC.	

DRAWING DATE: 7/13/2012 FILENAME: S38BR*35N-BB*PB*02.dgn

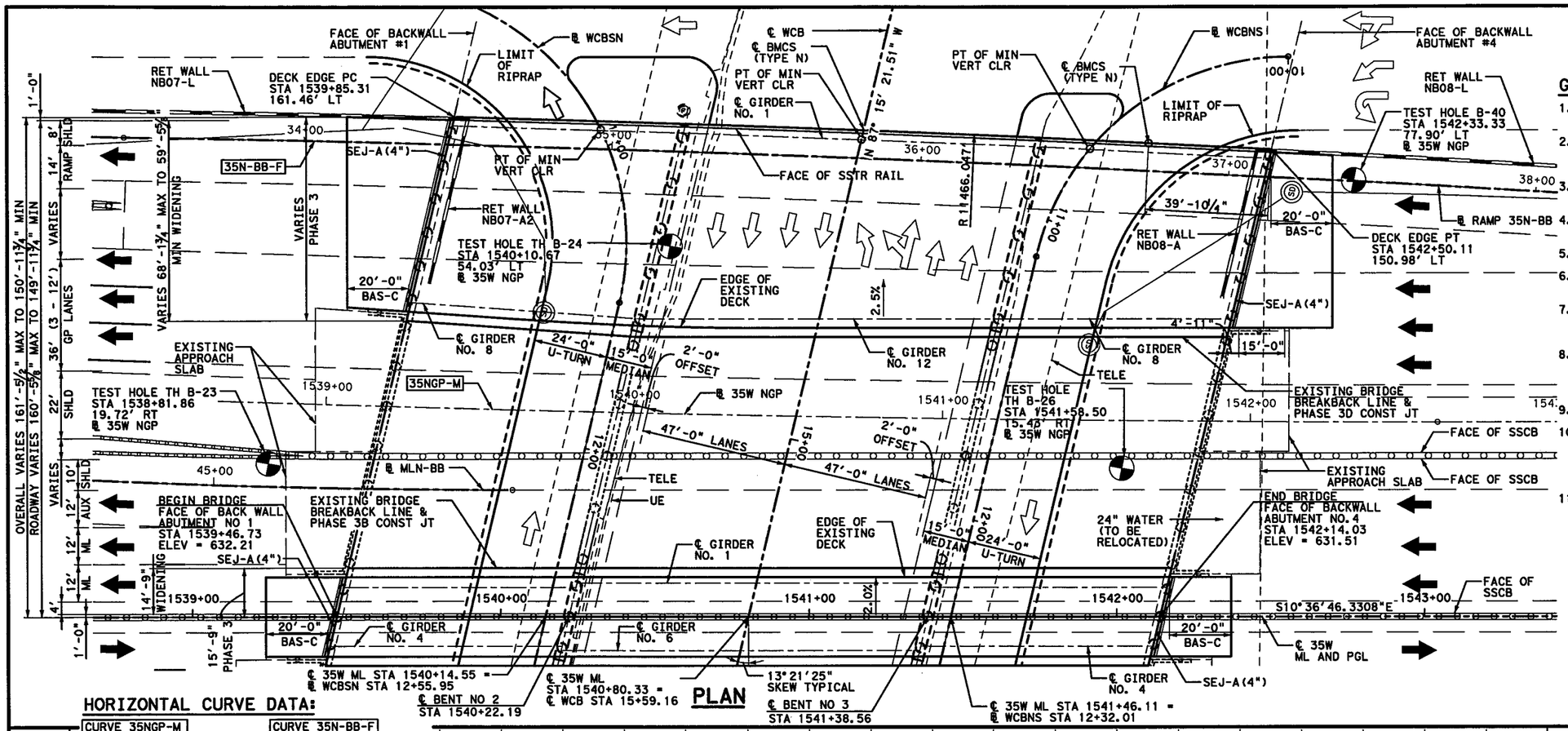

HORIZONTAL CURVE DATA:

CURVE 35NGP-M

PC STATION = 1538+32.66
PI STATION = 1540+46.79
PT STATION = 1542+60.88
Δ = 2° 08' 27.86" (LT)
D = 0° 30' 00.00"
T = 214.13
L = 428.21
R = 11,459.16

CURVE 35N-BB-F

PC STATION = 33+41.67
PI STATION = 36+29.31
PT STATION = 39+16.84
Δ = 2° 52' 33.11" (RT)
D = 0° 30' 00.00"
T = 287.65
L = 575.17
R = 11,459.16

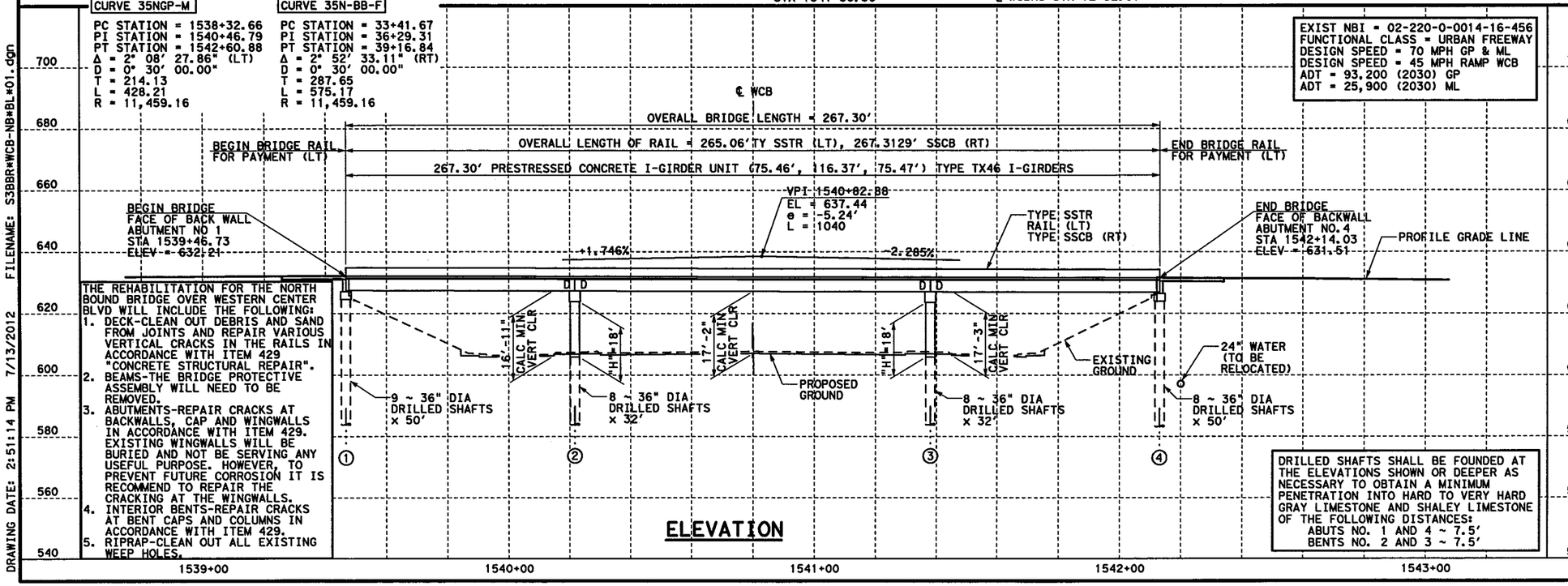

ELEVATION

THE REHABILITATION FOR THE NORTH BOUND BRIDGE OVER WESTERN CENTER BLVD WILL INCLUDE THE FOLLOWING:

1. DECK-CLEAN OUT DEBRIS AND SAND FROM JOINTS AND REPAIR VARIOUS VERTICAL CRACKS IN THE RAILS IN ACCORDANCE WITH ITEM 429 "CONCRETE STRUCTURAL REPAIR".
2. BEAMS-THE BRIDGE PROTECTIVE ASSEMBLY WILL NEED TO BE REMOVED.
3. ABUTMENTS-REPAIR CRACKS AT BACKWALLS, CAP AND WINGWALLS IN ACCORDANCE WITH ITEM 429. EXISTING WINGWALLS WILL BE BURIED AND NOT BE SERVING ANY USEFUL PURPOSE. HOWEVER, TO PREVENT FUTURE CORROSION IT IS RECOMMEND TO REPAIR THE CRACKING AT THE WINGWALLS.
4. INTERIOR BENTS-REPAIR CRACKS AT BENT CAPS AND COLUMNS IN ACCORDANCE WITH ITEM 429.
5. RIPRAP-CLEAN OUT ALL EXISTING WEEP HOLES.

DRILLED SHAFTS SHALL BE FOUNDED AT THE ELEVATIONS SHOWN OR DEEPER AS NECESSARY TO OBTAIN A MINIMUM PENETRATION INTO HARD TO VERY HARD GRAY LIMESTONE AND SHALEY LIMESTONE OF THE FOLLOWING DISTANCES:
ABUTS NO. 1 AND 4 ~ 7.5'
BENTS NO. 2 AND 3 ~ 7.5'

EXIST NBI = 02-220-0-0014-16-456
FUNCTIONAL CLASS = URBAN FREEWAY
DESIGN SPEED = 70 MPH GP & ML
DESIGN SPEED = 45 MPH RAMP WCB
ADT = 93,200 (2030) GP
ADT = 25,900 (2030) ML

0' 10' 20' 40'
SCALE IN FEET

GENERAL NOTES:

1. DESIGNED IN ACCORDANCE WITH 2010 AASHTO LRFD BRIDGE DESIGN SPECIFICATIONS.
2. ALL DIMENSIONS ARE EITHER HORIZONTAL OR VERTICAL AND MUST BE CORRECTED FOR GRADE, CROWN, AND/OR SUPERELEVATION.
3. "D" DENOTES BENTS WITH DOWEL BARS "D" AND SLOTTED HOLES AT ENDS OF EXTERIOR GIRDERS ONLY.
4. SEE "BORING LOGS - BRIDGES" SHEETS FOR GEOTECHNICAL INFORMATION.
5. FOR TYPICAL SECTIONS SEE "PHASING DETAILS" SHEET.
6. CONTRACTOR TO VERIFY LOCATION OF ALL UTILITIES PRIOR TO EXCAVATION.
7. FOR DRILLING LOG INFORMATION RELATED TO TH B-__ REFERENCE DESIGN PLANS FOR CSJ 0041-16-211 DATED FEB 1995.
8. SEE ILLUMINATION PLANS AND RELATED SUMMARY SHEETS FOR UNDERPASS LIGHT LOCATIONS, JUNCTION BOXES, FUSED DISCONNECT SWITCHES, AND CONDUIT DETAILS AND QUANTITIES.
9. ALLOWANCE FOR FUTURE RESURFACING: 23.3 PSF.
10. THE CONTRACTOR IS NOT ALLOWED TO USE THE EXISTING ADJACENT STRUCTURE FOR: FORMING, GRADING OR SCREEDING THE NEW BRIDGE DECK. DECK CONSTRUCTION AND PLACEMENT OPERATIONS SHALL BE COMPLETELY INDEPENDENT OF THE ADJACENT STRUCTURE.
11. PHASED CONSTRUCTION ON THE WIDEN BEAM WILL LOAD THIS BEAMLINE WITH ½ THE PLAN ANTICIPATED DEFLECTION BETWEEN PHASES. BUT, COMPOSITE ACTION ON THE DECK SYSTEM WILL BE CREATED ELIMINATING THE OPPORTUNITY FOR FULL DEFLECTION TO OCCUR. PRIOR TO COLUMN CONSTRUCTION PROPOSE COLUMN AND BEARING SEAT ELEVATIONS TO COMPENSATE FOR THIS ACTION, MAINTAINING DECK SECTION AND STEEL COVER. SUBMIT PROPOSAL TO ENGINEER FOR REVIEW AND ACCEPTANCE.

HS 20 LOADING (EXISTING)
HL 93 LOADING (WIDENING)

Shane W. Ebbert
STATE OF TEXAS
SHANE W. EBBERT
102017
LICENSED PROFESSIONAL ENGINEER
8/29/12

HALFF
TBPE REGISTRATION NO. F-312

Texas Department of Transportation
© 2012

IH 35W FROM NORTH TARRANT PKWY TO IH 820

BRIDGE LAYOUT

NB IH35W G.P., M.L. & EX. R. OVER WESTERN CENTER BLVD

SCALE: 1" = 40' H & V — SHEET 1 OF 1

DESIGN	FED.RD. DIV.NO.	FEDERAL AID PROJECT NO.		HIGHWAY NO.
SWE	6	(SEE TITLE SHEET)		IH 35W
GRAPHICS SG	STATE	DISTRICT	COUNTY	SHEET NO.
CHECK PJR	TEXAS	FTW	TARRANT	1741
CHECK PJR	CONTROL	SECTION	JOB	
	0014	16	255, ETC.	

DRAWING DATE: 2:51:14 PM 7/13/2012 FILENAME: S3BBR*WCB-NB*BL*01.dgn

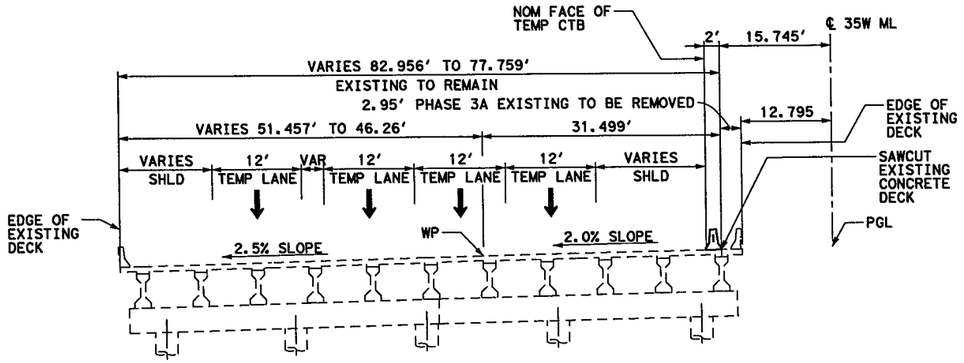

NORTHBOUND LANE

PHASE 3A TYPICAL SECTION

SCALE: 1"= 20'-0"

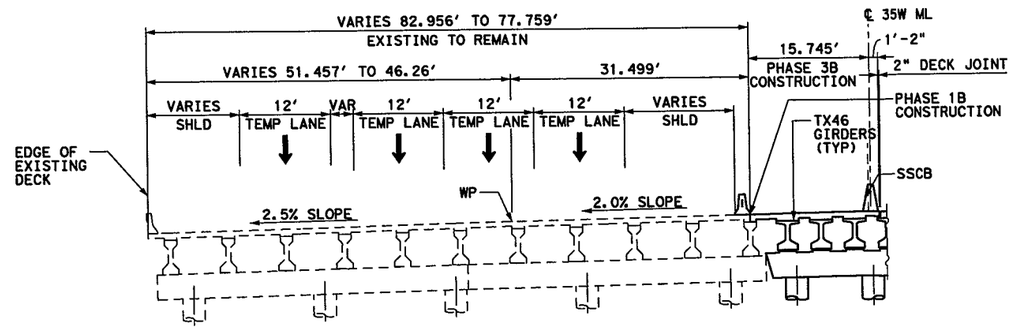

NORTHBOUND LANE

PHASE 3B TYPICAL SECTION

SCALE: 1"= 20'-0"

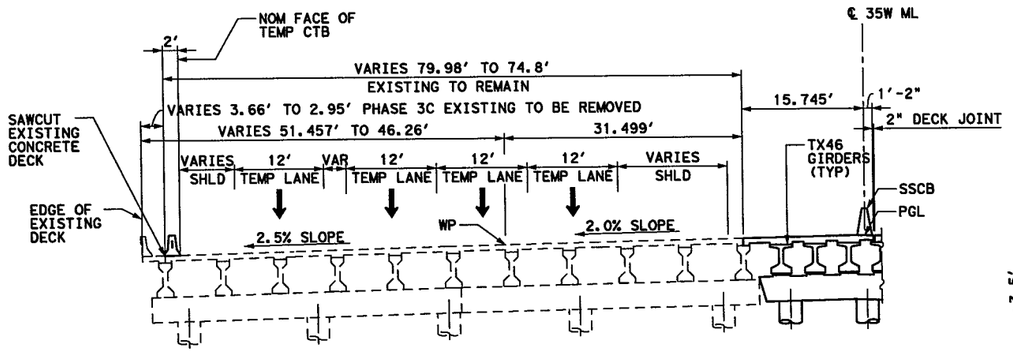

NORTHBOUND LANE

PHASE 3C TYPICAL SECTION

SCALE: 1"= 20'-0"

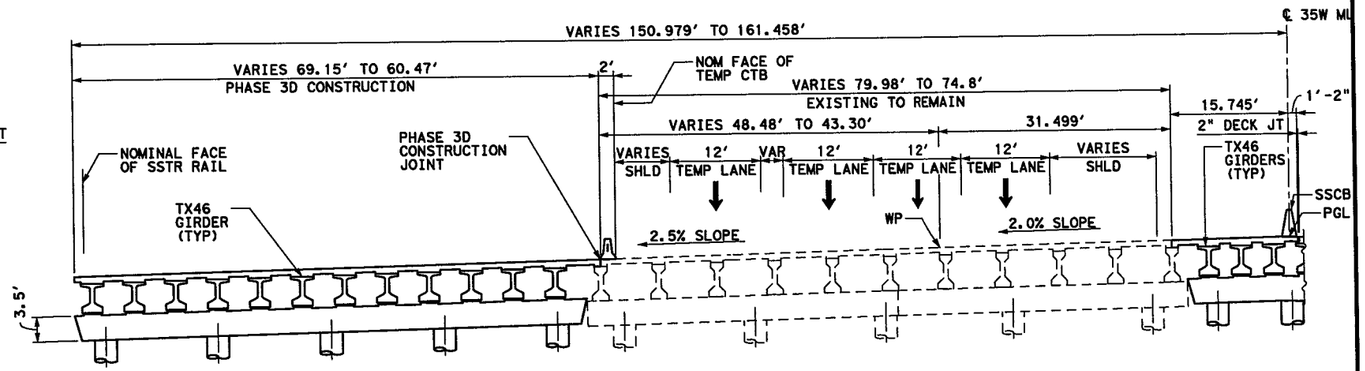

NORTHBOUND LANE

PHASE 3D TYPICAL SECTION

SCALE: 1"= 20'-0"

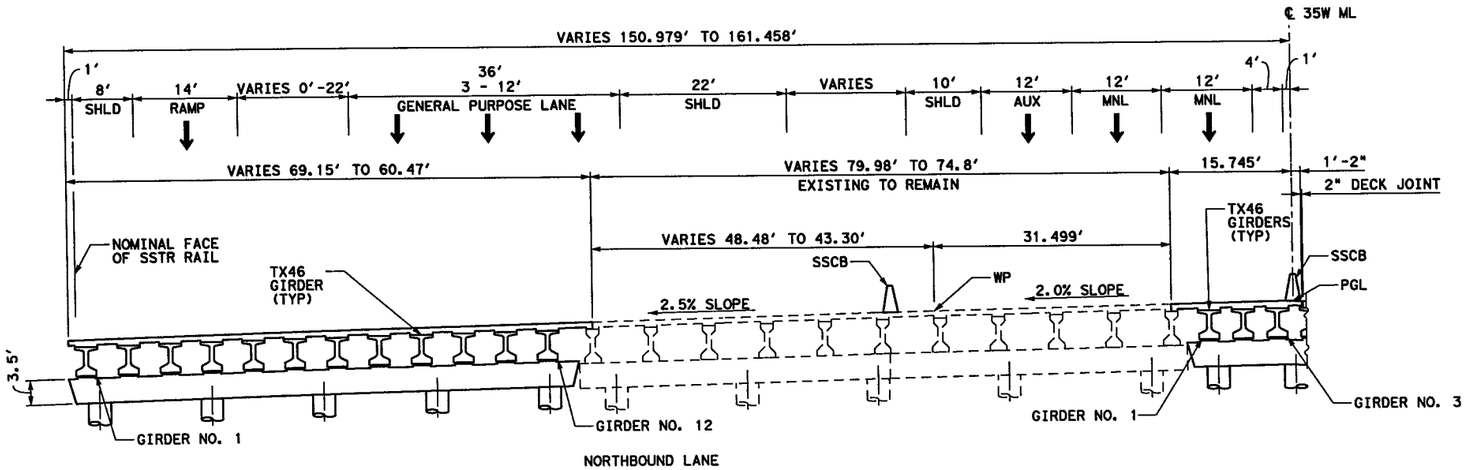

NORTHBOUND LANE

COMPLETED TYPICAL SECTION

SCALE: 1"= 20'-0"

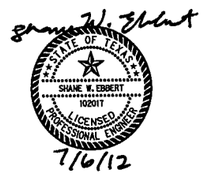

HALFF
TBPE REGISTRATION NO. F-312

Texas Department of Transportation
© 2012

IH 35W FROM NORTH TARRANT PKWY TO IH 820

PHASING DETAILS

NB IH35W G.P., M.L. & EX. R. OVER WESTERN CENTER BLVD

SCALE: 1" = 20' H & V — SHEET 1 OF 1

DESIGN	FED.RD. DIV.NO.	FEDERAL AID PROJECT NO.		HIGHWAY NO.
SWE	6	(SEE TITLE SHEET)		IH 35W
GRAPHICS	STATE	DISTRICT	COUNTY	SHEET NO.
SG	TEXAS	FTW	TARRANT	1742
CHECK PJR	CONTROL	SECTION	JOB	
CHECK PJR	0014	16	255, ETC.	

DRAWING DATE: 3:22:43 PM 7/13/2012 FILENAME: S3BBR*WCB-NB*PD*01.dgn

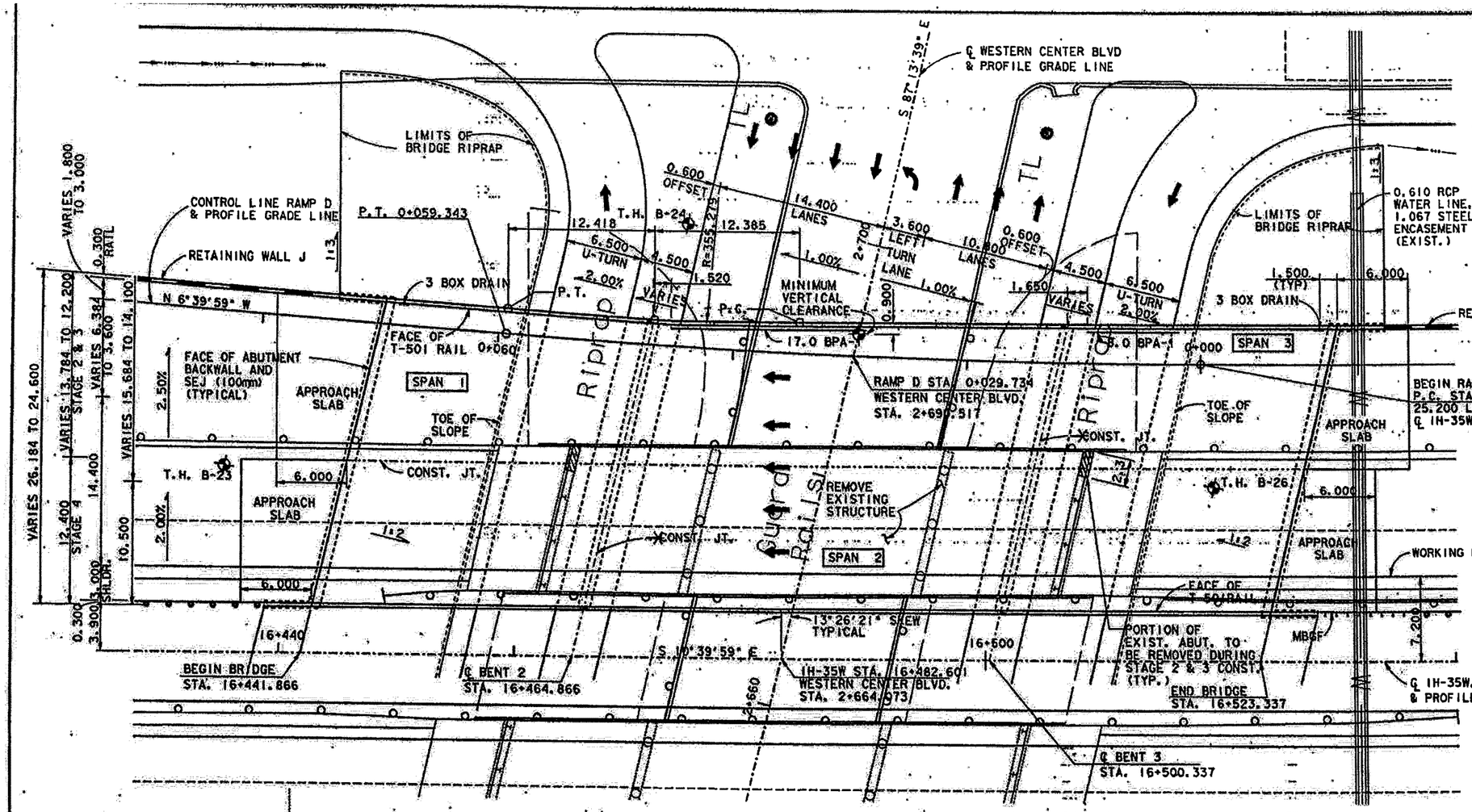

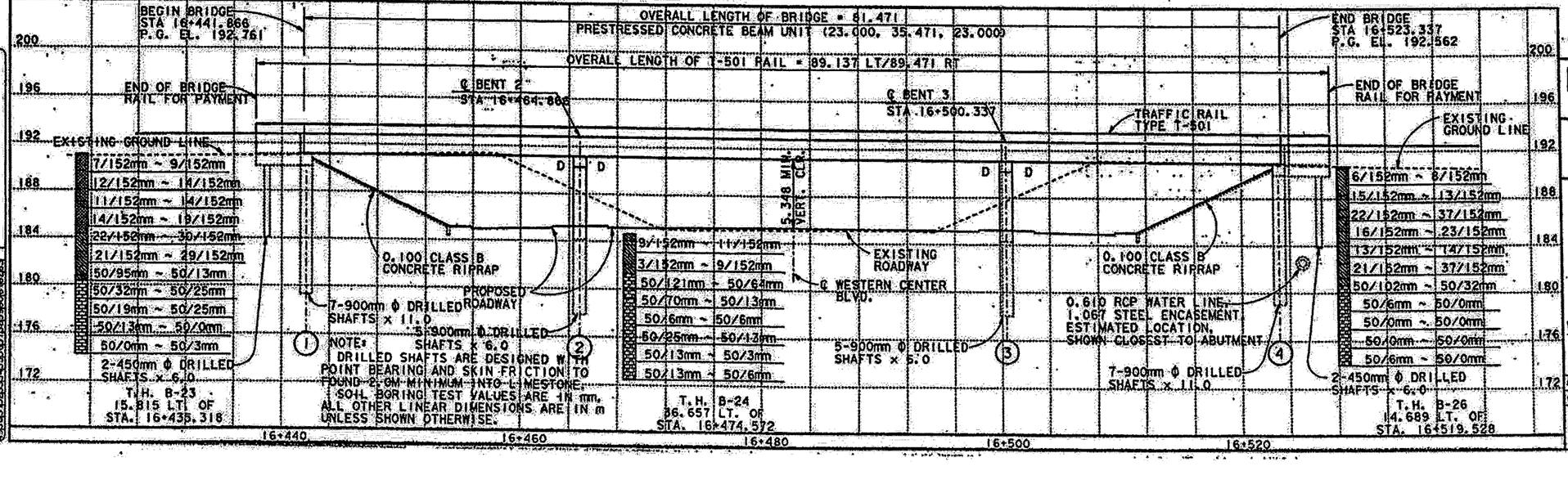

SCALE IN METERS
0 2 5 10m
SCALE: 1:200

RAMP D
HORIZONTAL CURVE DATA
P.I. = 0+029.684
Δ = 4°00'00" RT.
L = 59.343
R = 850.000
T = 29.684

IH-35W
VERTICAL CURVE DATA
P.I. = 16+480.000
ELEV. = 194.361
+1.776% V.C. = 320.000 -2.200%
M = -1.590

WESTERN CENTER BLVD.
VERTICAL CURVE DATA
NO VERTICAL CURVE
P.I. = 2+620.000
ELEV. = 185.500 -0.500%

TEST HOLE LEGEND
- CONCRETE
- ASPHALT
- FILL
- CLAY
- SHALE
- LIMESTONE
- LIMESTONE WITH CLAY
- LIMESTONE WITH SHALE

✳ BEAM END TREATMENT REQUIRED AT INTERIOR BENTS (SEE "MISC. BRIDGE DETAILS" STANDARD SHT.)

DESIGN SPEED = 110 Km/h
REPLACEMENT BRIDGE
NBI = 02-220-0-0014-16-456
PSN = 0014-16-456
MS18 LOADING

STATE OF TEXAS
DANIEL J.C. COPPS III
64481
LICENSED PROFESSIONAL ENGINEER

The seal appearing on this document was authorized by Daniel J.C. Copps III, P.E. 64481, on August 8, 1997

MS18 LOADING SHEET 1 OF 2

Brown & Root, Inc.
Houston, Texas

Turner Collie & Braden Inc.
ENGINEERS-PLANNERS-PROJECT MANAGERS

Texas Department of Transportation
Design Division (Bridge)

For Contractors Information Only

BRIDGE LAYOUT

WESTERN CENTER BLVD OVERPASS NORTHBOUND MAINLANES

FILE: DT2LOAOT.DGN	DN: TCB	CK: BR	DW: TCB	CK: BR
ORIG DATE:	DIST	FED RGN	FEDERAL AID PROJECT #	SHEET
REVISIONS	02	6	DPIC 0001(001)	1743
	COUNTY		CONTROL	SECT	JOB	HIGHWAY
	TARRANT		0014	16	211	IH-35W

LEVELS DISPLAYED
1 2 3 4 5 6 7 8 9 10 11 12 13 14 15 16 17 18 19 20 21 22 23 24 25 26 27 28 29 30 31 32 33 34 35 36 37 38 39 40 41 42 43 44 45 46 47 48 49 50 51 52 53 54 55 56 57 58 59 60 61 62 63 64
ACCU:

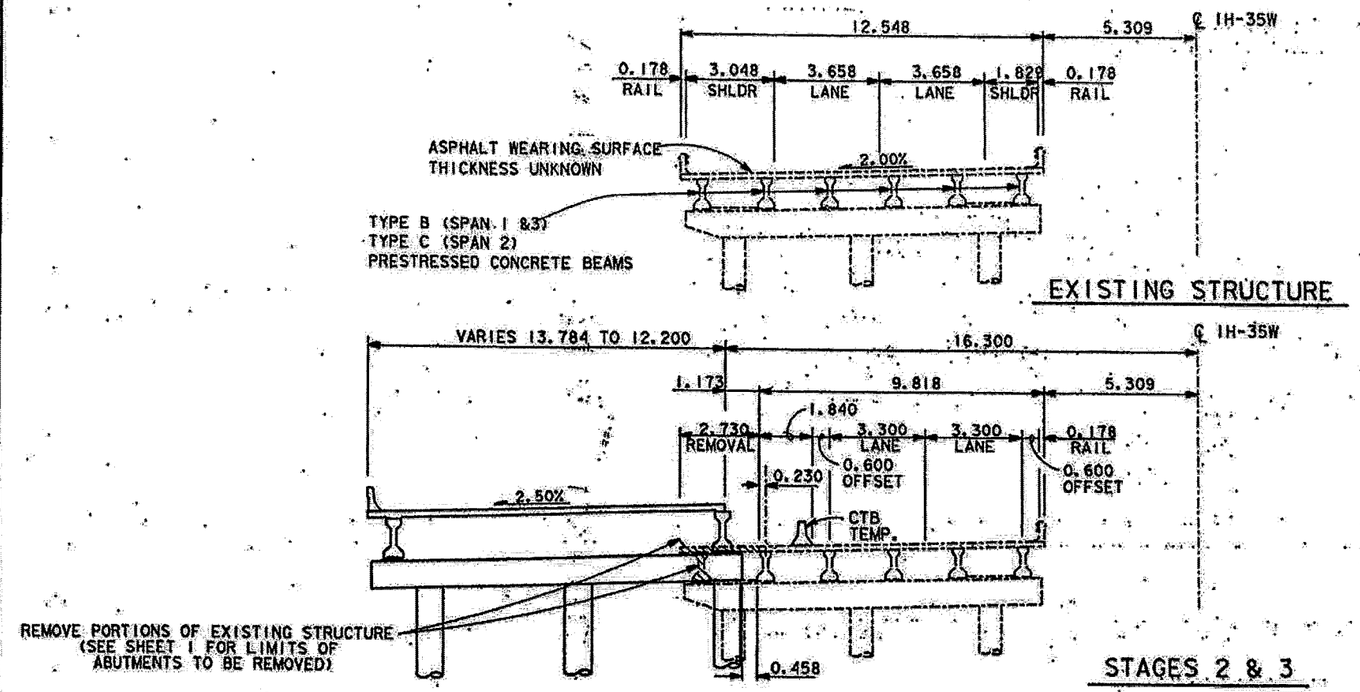

STAGE 1 INVOLVES NO BRIDGE CONSTRUCTION. TRAFFIC LOCATION SHIFTS FROM EXISTING LOCATION TO ACCOMMODATE REPLACEMENT OF ASPHALT ROADWAY INSIDE SHOULDER. SEE ROADWAY CONSTRUCTION STAGING DRAWINGS.

STAGE 1

NOTE:
ALL LINEAR DIMENSIONS ARE IN METERS UNLESS SHOWN OTHERWISE.

DANIEL J.C. COPPS III
64481
The seal appearing on this document was authorized by Daniel J.C. Copps III, P.E. 64481, on August 8, 1997

MS1B LOADING

SHEET 2 OF 2

Brown & Root, Inc.
Houston, Texas

Turner Collie & Braden Inc.
ENGINEERS PLANNERS PROJECT MANAGERS

Texas Department of Transportation
Design Division (Bridge)

For Contractors Information Only

BRIDGE LAYOUT

WESTERN CENTER BLVD OVERPASS
NORTHBOUND MAINLANES

FILE: D72L0A02.DGN	DN: TCB	CK: BR	DW: TCB	CK: BR
ORIG DATE:	DIST	FED. REG	FEDERAL AID PROJECT #	SHEET
REVISIONS	02	6	DPI 0101 (001)	1744
	COUNTY		CONTROL SECT	JOB HIGHWAY
	TARRANT		0014	16 217 IH-35W

LEVELS DISPLAYED
ACC
1 2 3 4 5 6 7 8 9 10 11 12 13 14 15 16 17 18 19 20 21 22 23 24 25 26 27 28 29 30 31 32 33 34 35 36 37 38 39 40 41 42 43 44 45 46 47 48 49 50 51 52 53 54 55 56 57 58 59 60 61 62 63

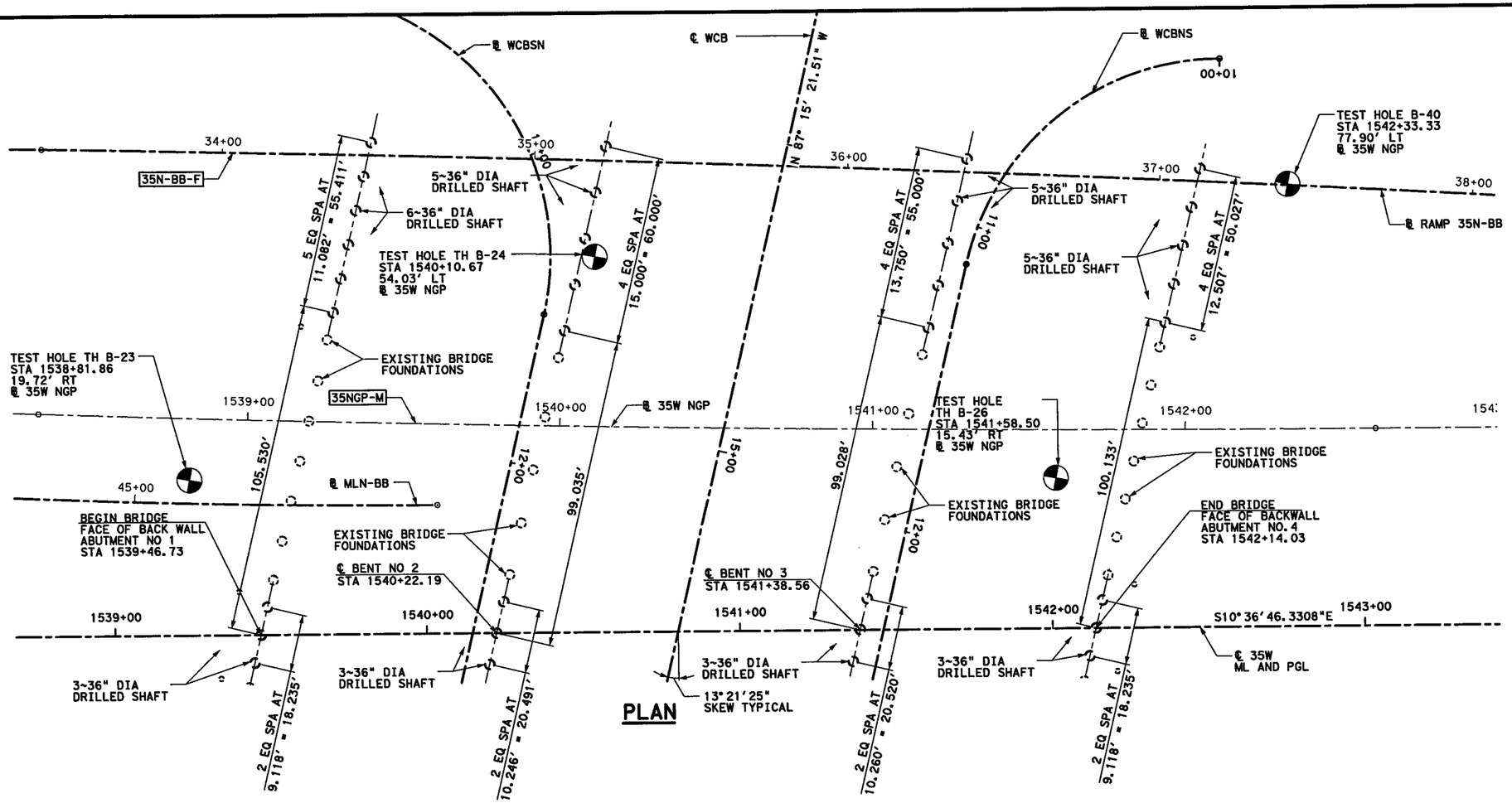

PLAN

0' 10' 20' 40'

SCALE IN FEET

GENERAL NOTES:

1. FOR ANY TEMPORARY SHORING REQUIRED AT AT INTERIOR BENT LOCATIONS, FOLLOW TxDOT STANDARD SPECIFICATION ITEM 403.
2. SEE "BORING LOGS - BRIDGES" SHEETS FOR GEOTECHNICAL INFORMATION.
3. ⌖ DENOTES TEST HOLE LOCATION.
4. CONTRACTOR TO VERIFY LOCATION OF ALL UTILITIES PRIOR TO EXCAVATION.
5. FOR DRILLING LOG INFORMATION RELATED TO TH B-__ REFERENCE DESIGN PLANS FOR CSJ 0041-16-211 DATED FEB 1995.

STATE OF TEXAS
SHANE W. EBBERT
102017
LICENSED PROFESSIONAL ENGINEER
7/6/12

HS 20 LOADING (EXISTING)
HL 93 LOADING (WIDENING)

HALFF
TBPE REGISTRATION NO. F-312

Texas Department of Transportation
© 2012

IH 35W FROM NORTH TARRANT PKWY TO IH 820

FOUNDATION LAYOUT

NB IH35W G.P., M.L. & EX. R. OVER WESTERN CENTER BLVD

SCALE: 1" = 40' H & V — SHEET 1 OF 1

DESIGN	FED.RD. DIV.NO.	FEDERAL AID PROJECT NO.		HIGHWAY NO.
SWE	6	(SEE TITLE SHEET)		IH 35W
GRAPHICS SG	STATE	DISTRICT	COUNTY	SHEET NO.
CHECK PJR	TEXAS	FTW	TARRANT	1745
CHECK PJR	CONTROL	SECTION	JOB	
	0014	16	255, ETC.	

DRAWING DATE: 3:30:02 PM 7/13/2012 FILENAME: S3BBR#WCB-NB#FL#01.dgn

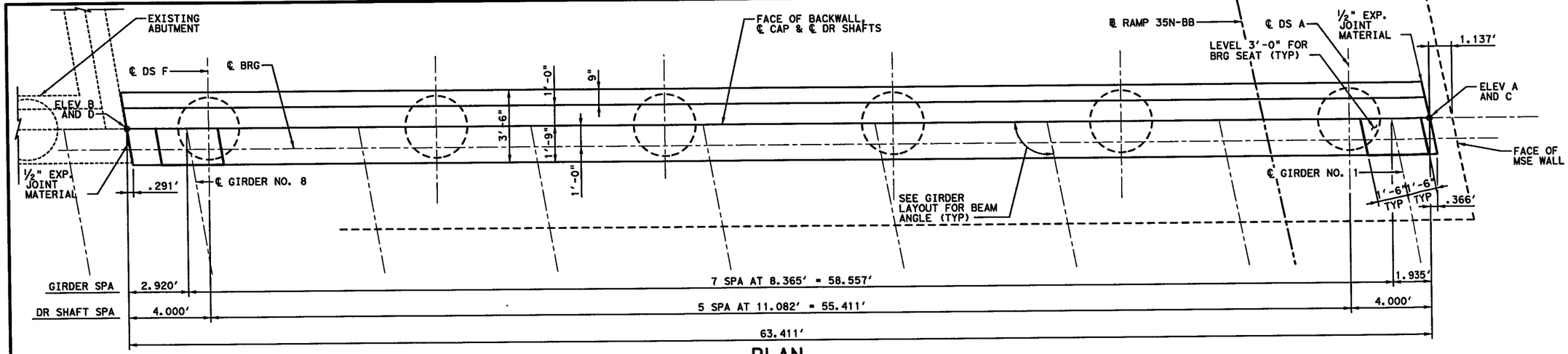

PLAN

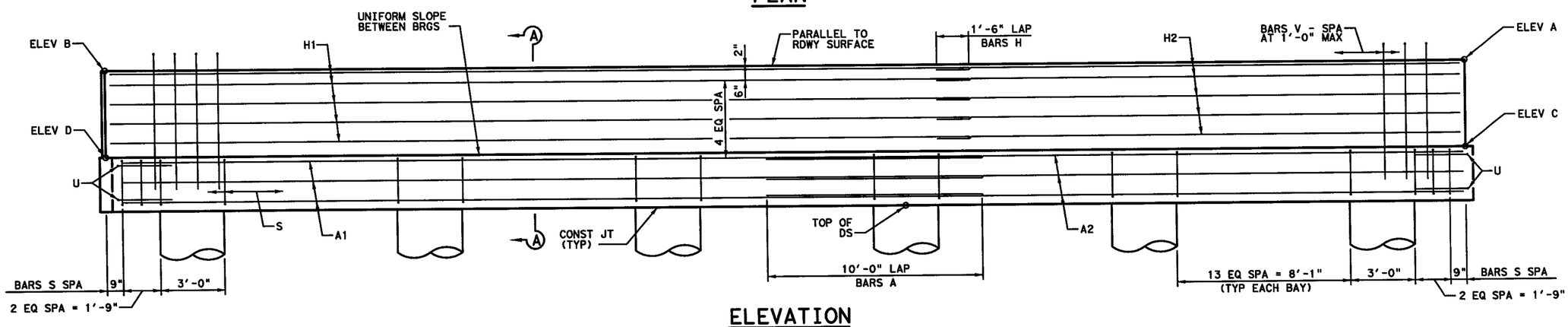

ELEVATION

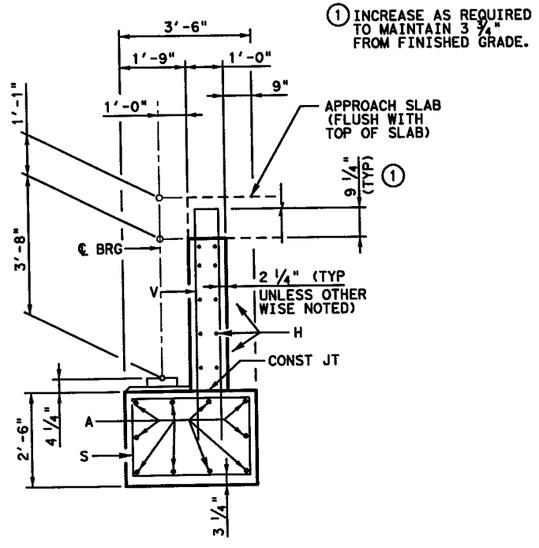

SECTION A-A

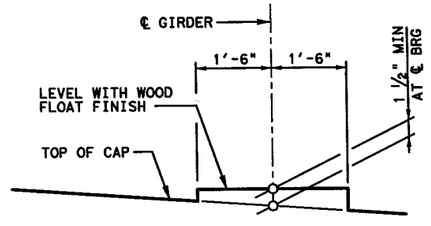

BEARING SEAT DETAIL

(BEARING SURFACE SHALL BE CLEAN AND FREE OF ALL LOOSE MATERIAL BEFORE PLACING BEARING PAD)

TABLE OF ELEVATIONS

CAP	ELEV A	ELEV B	ELEV C	ELEV D		
	627.45	628.97	623.43	624.95		
TOP OF DS	DS A	DS B	DS C	DS D	DS E	DS F
	621.03	621.29	621.56	621.83	622.09	622.36
SHAFT TIP	571.03	571.29	571.56	571.83	572.09	572.36
AS-BUILT SHAFT TIP						

SHANE W. EBBERT 102017 LICENSED PROFESSIONAL ENGINEER
7/6/12

HALFF
TBPE REGISTRATION NO. F-312

Texas Department of Transportation
© 2012

IH 35W FROM NORTH TARRANT PKWY TO IH 820

ABUTMENT 1 DETAILS

NB IH35W G.P. & EX. R. OVER WESTERN CENTER BLVD

SCALE: NTS — SHEET 1 OF 2

DESIGN	FED. RD. DIV. NO.	FEDERAL AID PROJECT NO.		HIGHWAY NO.
SWE	6	(SEE TITLE SHEET)		IH 35W
GRAPHICS	STATE	DISTRICT	COUNTY	SHEET NO.
SG	TEXAS	FTW	TARRANT	1746
CHECK	CONTROL	SECTION	JOB	
PJR	0014	16	255, ETC.	
CHECK				
PJR				

DRAWING DATE: 3:23:03 PM 7/13/2012 FILENAME: S3BBR*WCB-NB*AB*01.dgn

TABLE OF ESTIMATED QUANTITIES				
BAR	NO.	SIZE	LENGTH	WEIGHT
A1	10	#11	40'-0"	2,125
A2	10	#11	32'-6"	1,727
H1	10	# 6	40'-0"	601
H2	10	# 6	24'-5"	367
S	76	# 5	11'-4"	899
U	4	# 6	8'-1"	49
V	64	# 5	12'-9"	851
REINFORCING STEEL			LB	6,619
CL "C" CONC (HPC) (ABUT)			CY	30.0

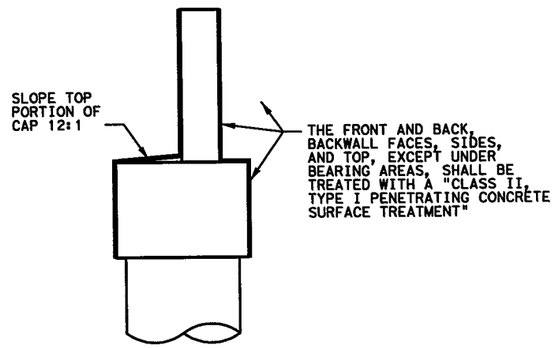

CONCRETE SURFACE TREATMENT DETAIL

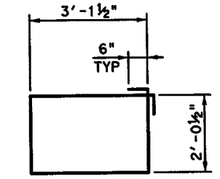

BARS S

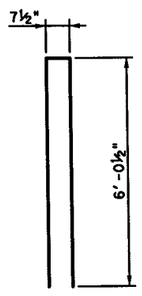

BARS V

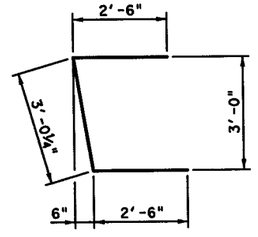

BARS U

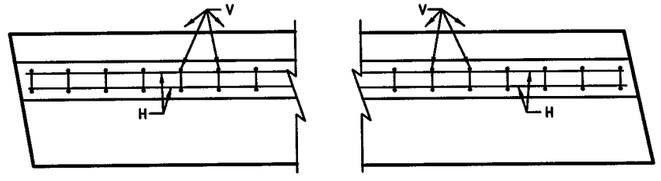

BACKWALL

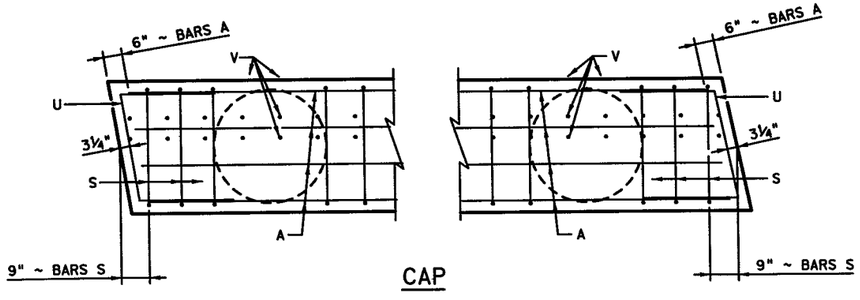

CAP

CORNER DETAILS

GENERAL NOTES:

1. DESIGNED ACCORDING TO AASHTO LRFD BRIDGE DESIGN SPECIFICATIONS, 5TH EDITION (2010).
2. CLASS "C" (HPC) CONCRETE STRENGTH F'C = 3,600 PSI.
3. ALL CAP AND WALL REINFORCING SHALL BE GRADE 60.
4. SEE FOUNDATION DETAIL SHEET, FD, FOR ALL FOUNDATION DETAILS AND NOTES.
5. CALCULATED FOUNDATION LOADS:
   CAP OR SHAFT = 119 TONS/DR SHAFT
6. SEE CONCRETE RIPRAP STANDARD SHEET, CRR, FOR RIPRAP ATTACHMENT DETAILS, IF APPLICABLE.

STATE OF TEXAS
SHANE W. EBBERT
102017
LICENSED PROFESSIONAL ENGINEER
7/6/12

HALFF
TBPE REGISTRATION NO. F-312

Texas Department of Transportation
© 2012

IH 35W FROM NORTH TARRANT PKWY TO IH 820

ABUTMENT 1 DETAILS

NB IH35W G.P. & EX. R.
OVER WESTERN CENTER BLVD

SCALE: NTS — SHEET 2 OF 2

DESIGN	FED. RD. DIV. NO.	FEDERAL AID PROJECT NO.		HIGHWAY NO.
SWE	6	(SEE TITLE SHEET)		IH 35W
GRAPHICS	STATE	DISTRICT	COUNTY	SHEET NO.
SG	TEXAS	FTW	TARRANT	
CHECK	CONTROL	SECTION	JOB	1747
PJR	0014	16	255, ETC.	
CHECK				
PJR				

DRAWING DATE: 3:23:09 PM 7/13/2012 FILENAME: S3BBR*WCB-NB*AB*02.dgn

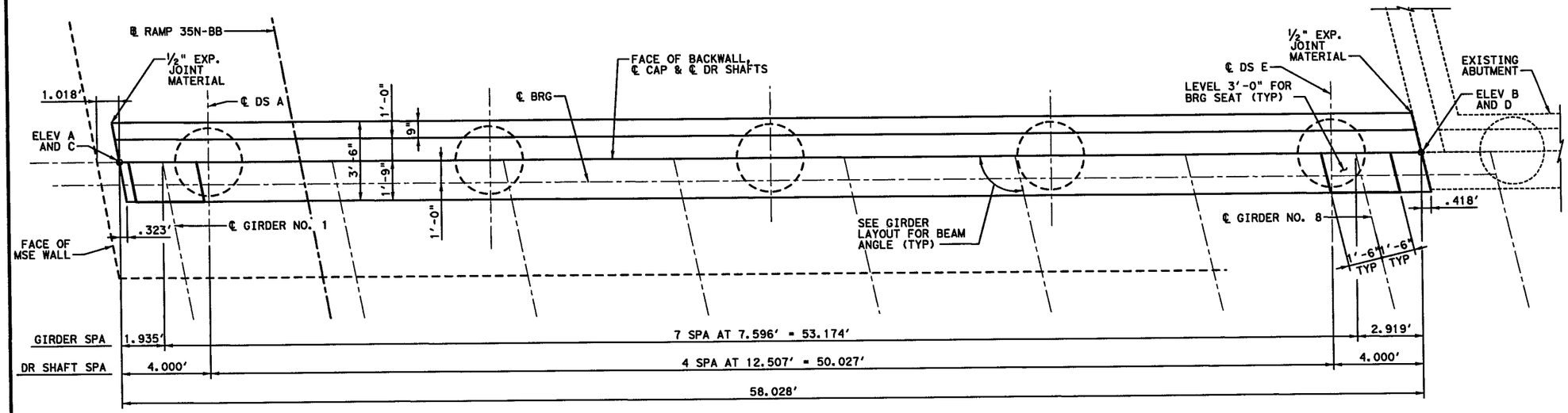

PLAN

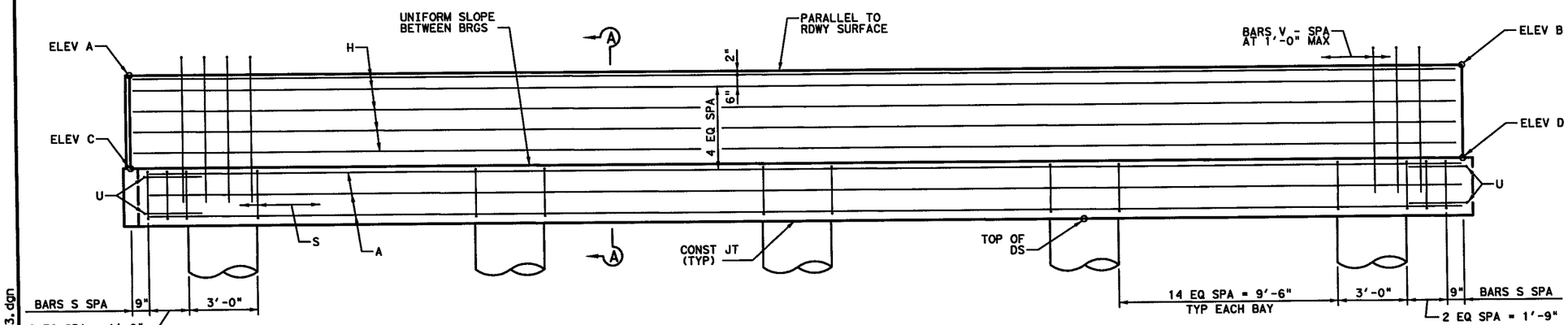

ELEVATION

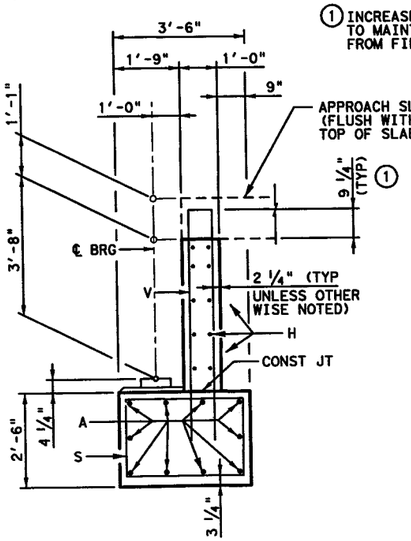

① INCREASE AS REQUIRED TO MAINTAIN 3 ¾" FROM FINISHED GRADE.

SECTION A-A

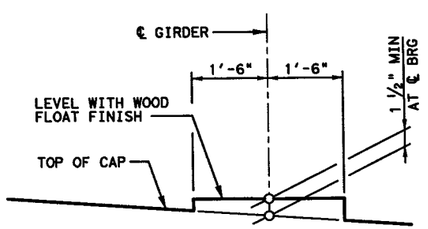

BEARING SEAT DETAIL

(BEARING SURFACE SHALL BE CLEAN AND FREE OF ALL LOOSE MATERIAL BEFORE PLACING BEARING PAD)

TABLE OF ELEVATIONS

CAP	ELEV A	ELEV B	ELEV C	ELEV D	
	626.65	628.18	622.63	624.16	
DRILLED SHAFTS	DS A	DS B	DS C	DS D	DS E
	620.23	620.56	620.89	621.22	621.55
SHAFT TIP	570.23	570.56	570.89	571.22	571.55
AS-BUILT SHAFT TIP					

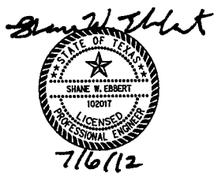

HALFF
TBPE REGISTRATION NO. F-312

Texas Department of Transportation
© 2012

IH 35W FROM NORTH TARRANT PKWY TO IH 820

ABUTMENT 4 DETAILS

NB IH35W G.P. & EX. R. OVER WESTERN CENTER BLVD

SCALE: NTS — SHEET 1 OF 2

DESIGN	FED. RD. DIV. NO.	FEDERAL AID PROJECT NO.		HIGHWAY NO.
SWE	6	(SEE TITLE SHEET)		IH 35W
GRAPHICS SG	STATE	DISTRICT	COUNTY	SHEET NO.
CHECK PJR	TEXAS	FTW	TARRANT	1748
CHECK PJR	CONTROL	SECTION	JOB	
	0014	16	255, ETC.	

DRAWING DATE: 3:23:20 PM 7/13/2012 FILENAME: S3BBR#WCB-NB#AB#03.dgn

TABLE OF ESTIMATED QUANTITIES

BAR	NO.	SIZE	LENGTH	WEIGHT
A	10	#11	57'-0"	3,029
H	10	# 6	57'-6"	864
S	66	# 5	11'-4"	780
U	4	# 6	8'-1"	49
V	59	# 5	12'-9"	785
REINFORCING STEEL			LB	5,507
CL "C" CONC (HPC) (ABUT)			CY	27.4

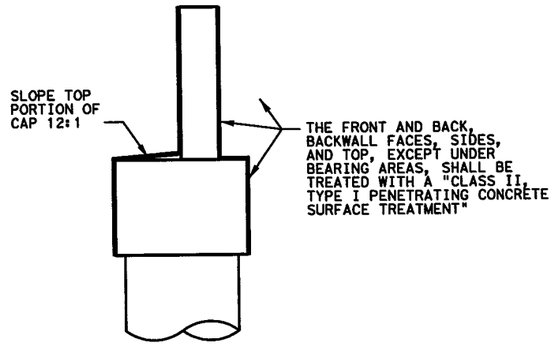

CONCRETE SURFACE TREATMENT DETAIL

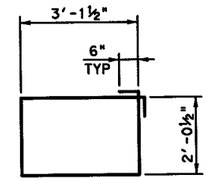

BARS S

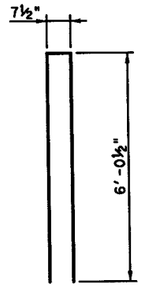

BARS V

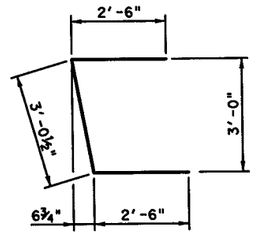

BARS U

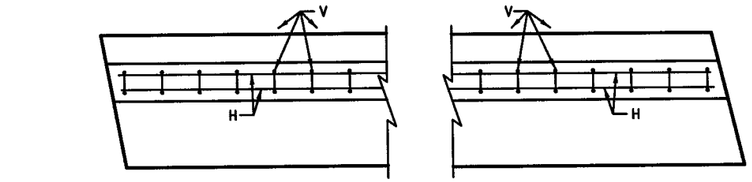

BACKWALL

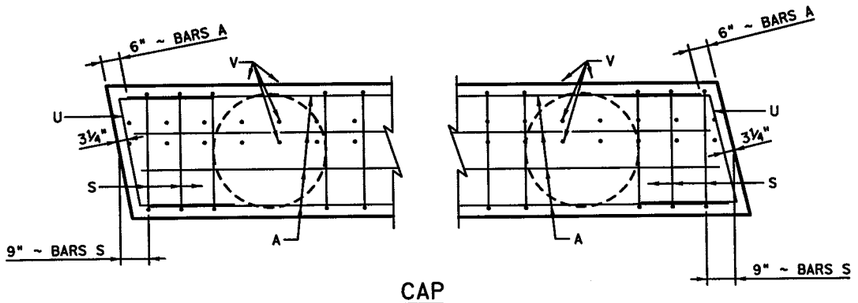

CAP

CORNER DETAILS

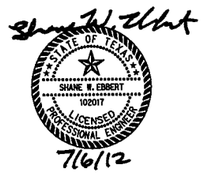

GENERAL NOTES:

1. DESIGNED ACCORDING TO AASHTO LRFD BRIDGE DESIGN SPECIFICATIONS, 5TH EDITION (2010).
2. CLASS "C" (HPC) CONCRETE STRENGTH F'C = 3,600 PSI.
3. ALL CAP AND WALL REINFORCING SHALL BE GRADE 60.
4. SEE FOUNDATION DETAIL SHEET, FD, FOR ALL FOUNDATION DETAILS AND NOTES.
5. CALCULATED FOUNDATION LOADS:
   CAP DR SHAFT = 116 TONS/DR SHAFT
6. SEE CONCRETE RIPRAP STANDARD SHEET, CRR, FOR RIPRAP ATTACHMENT DETAILS, IF APPLICABLE.

HALFF
TBPE REGISTRATION NO. F-312

Texas Department of Transportation
© 2012

IH 35W FROM NORTH TARRANT PKWY TO IH 820

ABUTMENT 4 DETAILS

NB IH35W G.P. & EX. R.
OVER WESTERN CENTER BLVD

SCALE: NTS — SHEET 2 OF 2

DESIGN	FED.RD. DIV.NO.	FEDERAL AID PROJECT NO.		HIGHWAY NO.
SWE	6	(SEE TITLE SHEET)		IH 35W
GRAPHICS	STATE	DISTRICT	COUNTY	SHEET NO.
SG	TEXAS	FTW	TARRANT	1749
CHECK	CONTROL	SECTION	JOB	
PJR	0014	16	255, ETC.	
CHECK				
PJR				

DRAWING DATE: 3:23:26 PM 7/13/2012 FILENAME: S3BBR*WCB-NB*AB*04.dgn

GENERAL NOTES:

1. DESIGNED ACCORDING TO AASHTO LRFD BRIDGE DESIGN SPECIFICATIONS, 5TH EDITION (2010).
2. CLASS "C" (HPC) CONCRETE STRENGTH F'C = 3,600 PSI.
3. ALL REINFORCING STEEL SHALL BE GRADE 60.
4. SEE FOUNDATION DETAIL SHEET, FD, FOR ALL FOUNDATION DETAILS AND NOTES.
5. CALCULATED FOUNDATION LOADS:
   BENT 2 = 235 TONS/DR SHAFT

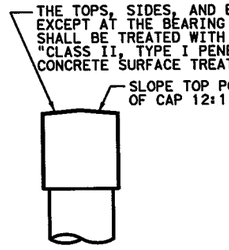

CONCRETE SURFACE TREATMENT DETAIL

TABLE OF ELEVATIONS

CAP	ELEV A	ELEV B			
	623.45	625.13			
COLUMNS	COL A	COL B	COL C	COL D	COL E
	620.05	620.42	620.79	621.16	621.53
④ TOP OF DS	DS A	DS B	DS C	DS D	DS E
	602.05	602.42	602.79	603.16	603.53
SHAFT TIP	570.05	570.42	570.79	571.16	571.53
AS-BUILT SHAFT TIP					

② TABLE OF COLUMN QUANTITIES

BENT	"H"	CLASS "C" CONC (5 COLS)	BARS V 50 ~ #9		BARS Z 5 ~ #3 SPIRAL	
NO.	FT	CY	LENGTH	WEIGHT	LENGTH	WEIGHT
2	18	23.6	20'-3"	3,443	283'-4"	533

② ADJUST BARS V LENGTH BY 1 FT AND BARS Z LENGTH BY 15.74 FT FOR EACH LINEAR FOOT OF VARIATION IN "H" VALUE.

③ ADJUST REINFORCING STEEL TOTAL BY 140 LBS AND CLASS "C" CONCRETE TOTAL BY 0.7854 CY FOR EACH LINEAR FOOT OF VARIATION IN "H" VALUE.

④ TOP OF DRILLED SHAFT ELEVATIONS WERE ESTIMATED BASED ON GROUND ELEVATION INFORMATION AVAILABLE AT THE TIME OF DESIGN. CONTRACTOR SHALL CONFIRM THESE ELEVATIONS PRIOR TO DRILLING.

③ TOTAL ESTIMATED QUANTITIES

REINF STEEL	CLASS "C" CONC
LB	CY
11,561	54.1

TABLE OF CONSTANT QUANTITIES

BAR	NO.	SIZE	LENGTH	WEIGHT
A1	6	#11	31'-4"	999
A2	6	#11	46'-4"	1,477
A3	2	#11	30'-7"	325
A4	2	#11	45'-7"	484
B1	6	#11	31'-7"	1,007
B2	6	#11	43'-6"	1,387
D	4	1 1/4"D	1'-8"	28
S	82	#5	13'-6"	1,155
T1	10	#5	27'-5"	286
T2	10	#5	40'-0"	417
U	2	#5	9'-8"	20
REINFORCING STEEL			LB	7,585
CL "C" CONC (HPC) (BENT)			CY	30.5

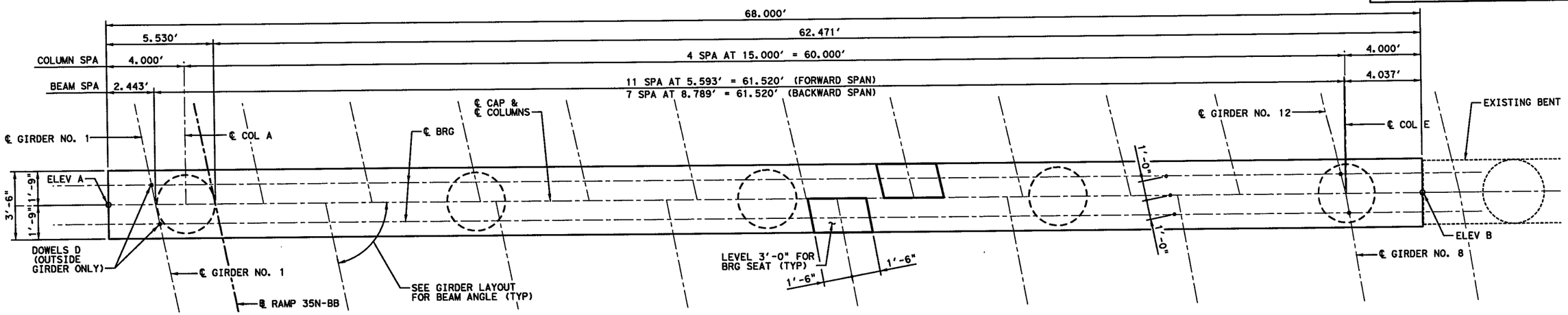

PLAN

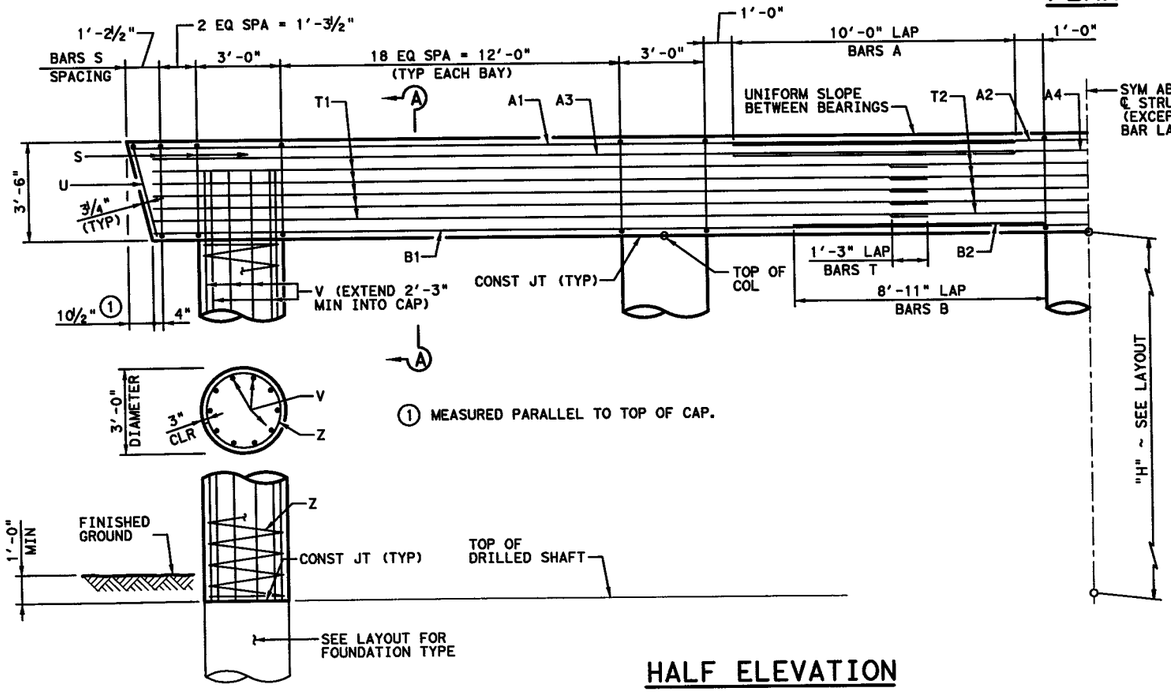

HALF ELEVATION

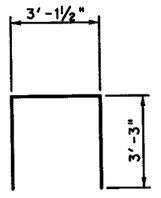

BARS U

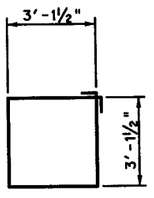

BARS S

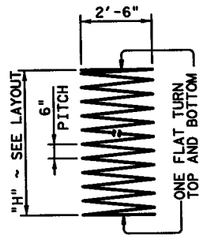

BARS Z

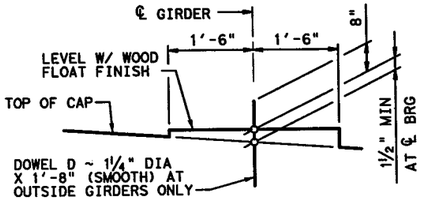

BEARING SEAT DETAIL

(BEARING SURFACE MUST BE CLEAN AND FREE OF ALL LOOSE MATERIAL BEFORE PLACING BEARING PAD.)

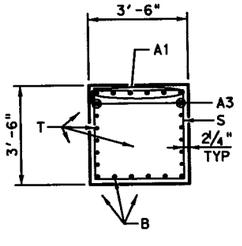

SECTION A-A

HALFF
TBPE REGISTRATION NO. F-312

Texas Department of Transportation
© 2012

IH 35W FROM NORTH TARRANT PKWY TO IH 820

INTERIOR BENT NO. 2

NB IH35W G.P. & EX. R.
OVER WESTERN CENTER BLVD

SCALE: NTS — SHEET 1 OF 1

DESIGN	FED.RD. DIV.NO.	FEDERAL AID PROJECT NO.		HIGHWAY NO.
SWE	6	(SEE TITLE SHEET)		IH 35W
GRAPHICS SG	STATE	DISTRICT	COUNTY	SHEET NO.
CHECK PJR	TEXAS	FTW	TARRANT	1750
CHECK PJR	CONTROL 0014	SECTION 16	JOB 255, ETC.	

DRAWING DATE: 3:23:37 PM 7/13/2012 FILENAME: S3BBR*WCB-NB*IB*01.dgn

GENERAL NOTES:

1. DESIGNED ACCORDING TO AASHTO LRFD BRIDGE DESIGN SPECIFICATIONS, 5TH EDITION (2010).
2. CLASS "C" (HPC) CONCRETE STRENGTH F'C = 3,600 PSI.
3. ALL REINFORCING STEEL SHALL BE GRADE 60.
4. SEE FOUNDATION DETAIL SHEET, FD, FOR ALL FOUNDATION DETAILS AND NOTES.
5. CALCULATED FOUNDATION LOADS:
   BENT 3 = 231 TONS/DR SHAFT

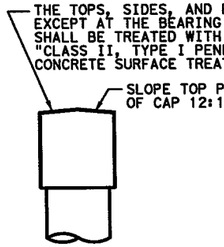

CONCRETE SURFACE TREATMENT DETAIL

TABLE OF ELEVATIONS

CAP	ELEV A	ELEV B			
	623.11	624.73			
COLUMNS	COL A	COL B	COL C	COL D	COL E
	619.71	620.06	620.42	620.77	621.12
TOP OF DS	DS A	DS B	DS C	DS D	DS E
	601.71	602.06	602.42	602.77	603.12
SHAFT TIP	569.71	570.06	570.42	570.77	571.12
AS-BUILT SHAFT TIP					

② TABLE OF COLUMN QUANTITIES

BENT	"H"	CLASS "C" CONC (5 COLS)	BARS V 50 ~ #9		BARS Z 5 ~ #3 SPIRAL	
NO.	FT	CY	LENGTH	WEIGHT	LENGTH	WEIGHT
3	18	23.6	20'-3"	3,443	283'-4"	533

② ADJUST BARS V LENGTH BY 1 FT AND BARS Z LENGTH BY 15.74 FT FOR EACH LINEAR FOOT OF VARIATION IN "H" VALUE.

③ ADJUST REINFORCING STEEL TOTAL BY 140 LBS AND CLASS "C" CONCRETE TOTAL BY 0.7854 CY FOR EACH LINEAR FOOT OF VARIATION IN "H" VALUE.

④ TOP OF DRILLED SHAFT ELEVATIONS WERE ESTIMATED BASED ON GROUND ELEVATION INFORMATION AVAILABLE AT THE TIME OF DESIGN. CONTRACTOR SHALL CONFIRM THESE ELEVATIONS PRIOR TO DRILLING.

③TOTAL ESTIMATED QUANTITIES

REINF STEEL	CLASS "C" CONC
LB	CY
9,919	51.8

TABLE OF CONSTANT QUANTITIES

BAR	NO.	SIZE	LENGTH	WEIGHT
A1	5	#11	29'-6"	784
A2	5	#11	43'-3"	1,149
A3	2	#11	28'-9"	306
A4	2	#11	42'-6"	452
B1	5	#11	29'-1"	773
B2	5	#11	41'-0"	1,089
D	4	1 1/4"D	1'-8"	28
S	78	#5	13'-6"	1,098
T1	10	#5	22'-5"	234
T2	10	#5	40'-0"	417
U	2	#5	9'-8"	20
REINFORCING STEEL			LB	5,943
CL "C" CONC (HPC) (BENT)			CY	28.2

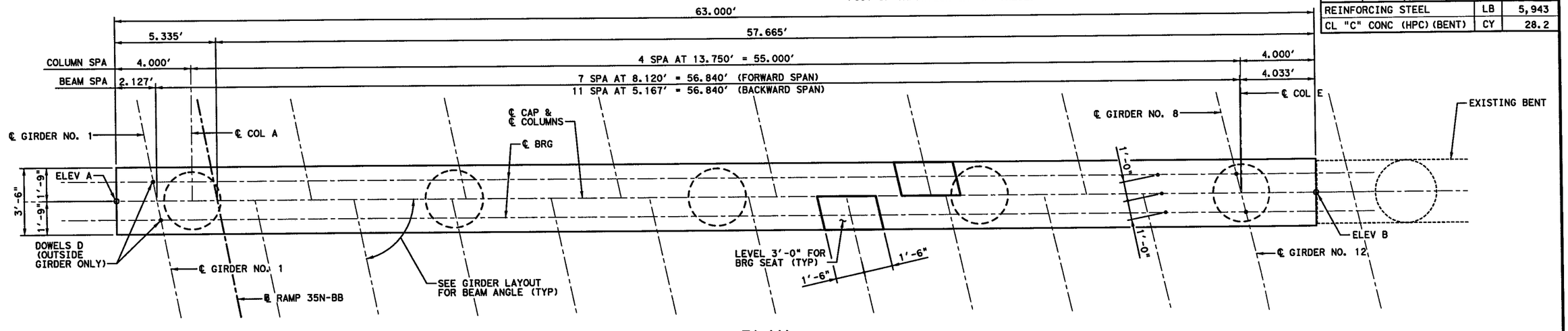

PLAN

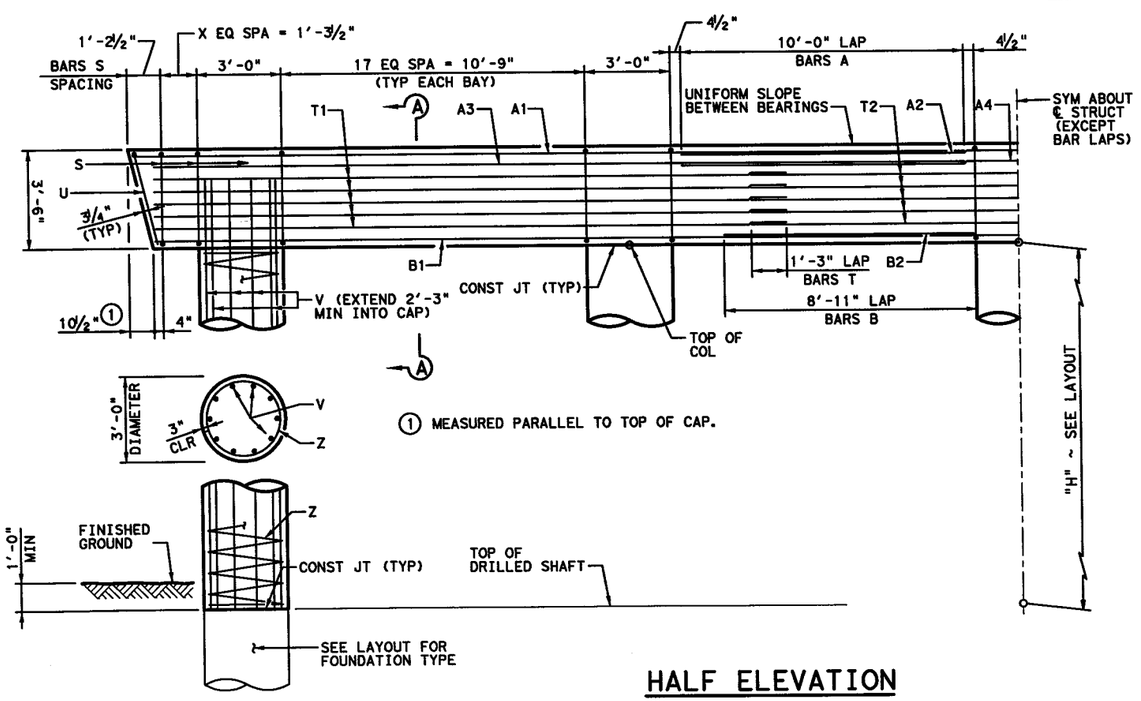

HALF ELEVATION

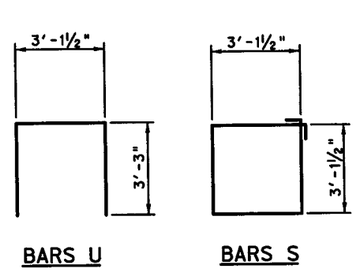

BARS U BARS S BARS Z

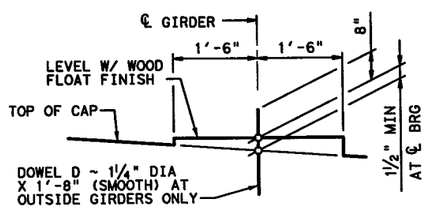

BEARING SEAT DETAIL

(BEARING SURFACE MUST BE CLEAN AND FREE OF ALL LOOSE MATERIAL BEFORE PLACING BEARING PAD.)

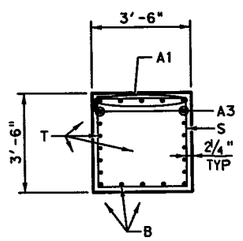

SECTION A-A

HALFF
TBPE REGISTRATION NO. F-312

Texas Department of Transportation
© 2012

IH 35W FROM NORTH TARRANT PKWY TO IH 820

INTERIOR BENT NO. 3

NB IH35W G.P. & EX. R.
OVER WESTERN CENTER BLVD

SCALE: NTS — SHEET 1 OF 1

DESIGN	FED.RD. DIV. NO.	FEDERAL AID PROJECT NO.		HIGHWAY NO.
SWE	6	(SEE TITLE SHEET)		IH 35W
GRAPHICS	STATE	DISTRICT	COUNTY	SHEET NO.
SG	TEXAS	FTW	TARRANT	1751
CHECK	CONTROL	SECTION	JOB	
PJR	0014	16	255, ETC.	
CHECK				
PJR				

DRAWING DATE: 3:23:43 PM 7/13/2012 FILENAME: S3BBR*WCB-NB*IB*02.dgn

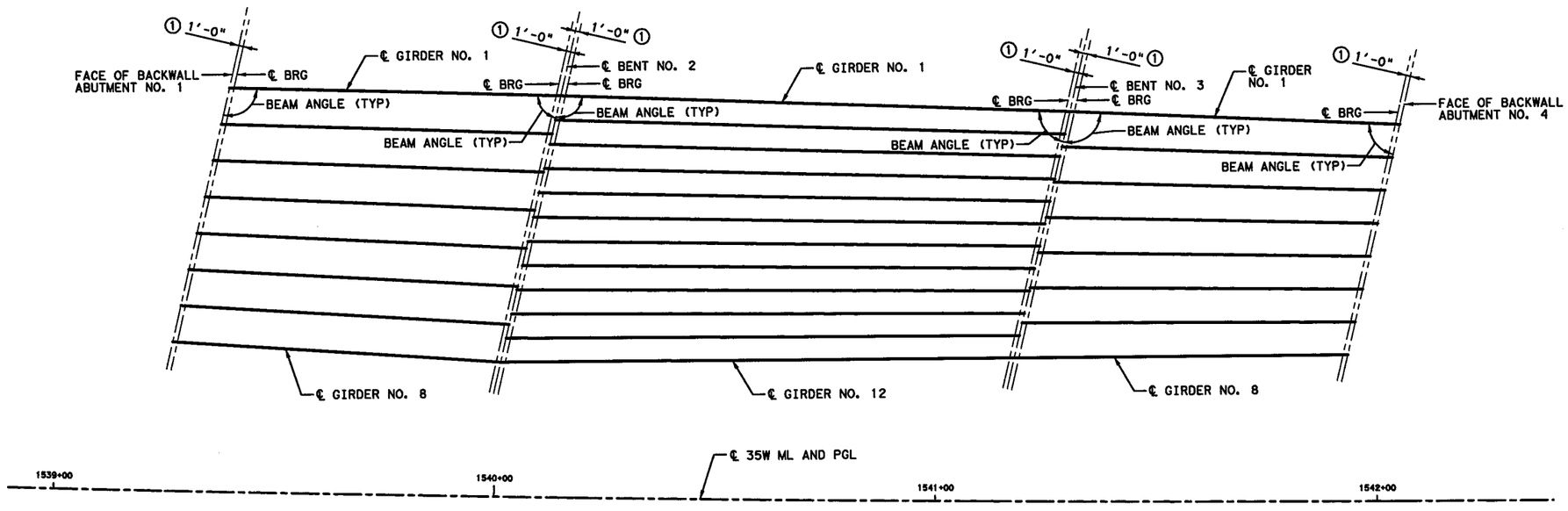

SPAN 1
(TX46 GIRDERS)

SPAN 2
(TX46 GIRDERS)

SPAN 3
(TX46 GIRDERS)

① SEE IGEB STANDARD FOR ORIENTATION OF DIMENSION.

② GIRDER LENGTHS SHOWN ARE BOTTOM GIRDER FLANGE LENGTHS WITH ADJUSTMENTS MADE FOR BEAM SLOPE.

BENT REPORT

ABUT NO. 1 (S87°10'26.33"E)
DISTANCE BETWEEN STATION LINE AND BEAM 1 91.05' L

			BEAM SPAC. (C.L. BENT)	BEAM ANGLE D M S
SPAN 1	BEAM	1	0.000	101 38 46
	BEAM	2	8.365	101 19 43
	BEAM	3	8.365	101 0 38
	BEAM	4	8.365	100 41 31
	BEAM	5	8.365	100 22 35
	BEAM	6	8.365	100 3 9
	BEAM	7	8.365	99 43 54
	BEAM	8	8.365	99 24 38
	TOTAL		58.557	

BENT NO. 2 (S87°10'26.33"E)
DISTANCE BETWEEN STATION LINE AND BEAM 1 90.57' L

			BEAM SPAC. (C.L. BENT)	BEAM ANGLE D M S
SPAN 1	BEAM	1	0.000	78 21 14
	BEAM	2	8.789	78 40 17
	BEAM	3	8.789	78 59 22
	BEAM	4	8.789	79 18 29
	BEAM	5	8.789	79 37 25
	BEAM	6	8.789	79 56 51
	BEAM	7	8.789	80 16 6
	BEAM	8	8.789	80 30 23
	TOTAL		61.520	
SPAN 2	BEAM	1	0.000	101 10 14
	BEAM	2	5.593	101 22 40
	BEAM	3	5.593	101 35 4
	BEAM	4	5.593	101 47 28
	BEAM	5	5.593	101 59 50
	BEAM	6	5.593	102 12 12
	BEAM	7	5.593	102 24 32
	BEAM	8	5.593	102 37 23
	BEAM	9	5.593	102 49 8
	BEAM	10	5.593	103 1 25
	BEAM	11	5.593	103 13 40
	BEAM	12	5.593	103 25 55
	TOTAL		61.520	

BENT NO. 3 (S87°10'26.33"E)
DISTANCE BETWEEN STATION LINE AND BEAM 1 87.9' L

			BEAM SPAC. (C.L. BENT)	BEAM ANGLE D M S
SPAN 2	BEAM	1	0.000	78 49 46
	BEAM	2	5.167	78 37 20
	BEAM	3	5.167	78 24 56
	BEAM	4	5.167	78 12 32
	BEAM	5	5.167	78 0 10
	BEAM	6	5.167	77 47 49
	BEAM	7	5.167	77 35 28
	BEAM	8	5.167	77 22 37
	BEAM	9	5.167	77 10 52
	BEAM	10	5.167	76 58 25
	BEAM	11	5.167	76 46 20
	BEAM	12	5.167	76 34 6
	TOTAL		56.840	
SPAN 3	BEAM	1	0.000	100 41 45
	BEAM	2	8.120	101 5 24
	BEAM	3	8.120	101 28 59
	BEAM	4	8.120	101 52 31
	BEAM	5	8.120	102 15 58
	BEAM	6	8.120	102 38 25
	BEAM	7	8.120	103 2 40
	BEAM	8	8.120	103 25 55
	TOTAL		56.840	

ABUTMENT NO. 4 (S87°10'26.33"E)
DISTANCE BETWEEN STATION LINE AND BEAM 1 84.93' L

			BEAM SPAC. (C.L. BENT)	BEAM ANGLE D M S
SPAN 3	BEAM	1	0.000	79 18 16
	BEAM	2	7.596	78 54 36
	BEAM	3	7.596	78 38 1
	BEAM	4	7.596	78 7 30
	BEAM	5	7.596	77 44 2
	BEAM	6	7.596	77 21 35
	BEAM	7	7.596	76 57 20
	BEAM	8	7.596	76 34 6
	TOTAL		53.174	

BEAM REPORT

BEAM REPORT, SPAN 1

	HORIZONTAL DISTANCE C-C BENT	C-C BRG.	TRUE DISTANCE BOT. BM. FLG. ②	BEAM SLOPE
BEAM 1	74.939	72.897	74.46	0.0004
BEAM 2	74.855	72.815	74.38	0.0006
BEAM 3	74.773	72.736	74.28	0.0008
BEAM 4	74.683	72.658	74.20	0.0011
BEAM 5	74.617	72.584	74.11	0.0013
BEAM 6	74.541	72.510	74.03	0.0015
BEAM 7	74.468	72.439	73.96	0.0017
BEAM 8	74.398	72.371	73.87	0.0019

BEAM REPORT, SPAN 2

	HORIZONTAL DISTANCE C-C BENT	C-C BRG.	TRUE DISTANCE BOT. BM. FLG. ②	BEAM SLOPE
BEAM 1	115.369	113.331	114.87	-0.0030
BEAM 2	115.453	113.413	114.95	-0.0031
BEAM 3	115.538	113.496	115.04	-0.0031
BEAM 4	115.625	113.581	115.13	-0.0032
BEAM 5	115.713	113.668	115.21	-0.0032
BEAM 6	115.802	113.756	115.30	-0.0033
BEAM 7	115.893	113.845	115.39	-0.0033
BEAM 8	115.986	113.936	115.49	-0.0033
BEAM 9	116.080	114.029	115.58	-0.0034
BEAM 10	116.176	114.123	115.68	-0.0034
BEAM 11	116.273	114.218	115.77	-0.0035
BEAM 12	116.371	114.315	115.87	-0.0035

BEAM REPORT, SPAN 3

	HORIZONTAL DISTANCE C-C BENT	C-C BRG.	TRUE DISTANCE BOT. BM. FLG. ②	BEAM SLOPE
BEAM 1	74.704	72.668	74.22	-0.0065
BEAM 2	74.803	72.765	74.33	-0.0066
BEAM 3	74.905	72.864	74.44	-0.0067
BEAM 4	75.011	72.967	74.55	-0.0068
BEAM 5	75.121	73.074	74.67	-0.0069
BEAM 6	75.229	73.179	74.79	-0.0070
BEAM 7	75.350	73.297	74.91	-0.0071
BEAM 8	75.470	73.414	75.04	-0.0072

STATE OF TEXAS
SHANE W. EBBERT
102017
LICENSED
PROFESSIONAL ENGINEER
7/16/12

HALFF
TBPE REGISTRATION NO. F-312

Texas Department of Transportation
© 2012

IH 35W FROM NORTH TARRANT PKWY TO IH 820

GIRDER LAYOUT

NB IH35W G.P. AND EX. R.
OVER WESTERN CENTER BLVD

SCALE: NTS — SHEET 1 OF 1

DESIGN	FED. RD. DIV. NO.	FEDERAL AID PROJECT NO.		HIGHWAY NO.
GRAPHICS	6	(SEE TITLE SHEET)		IH 35W
	STATE	DISTRICT	COUNTY	SHEET NO.
CHECK	TEXAS	FTW	TARRANT	1752
CHECK	CONTROL	SECTION	JOB	
	0014	16	255, ETC.	

DRAWING DATE: 3:37:13 PM 7/13/2012 FILENAME: S3BBR*WCB-NB*GF*01.DGN

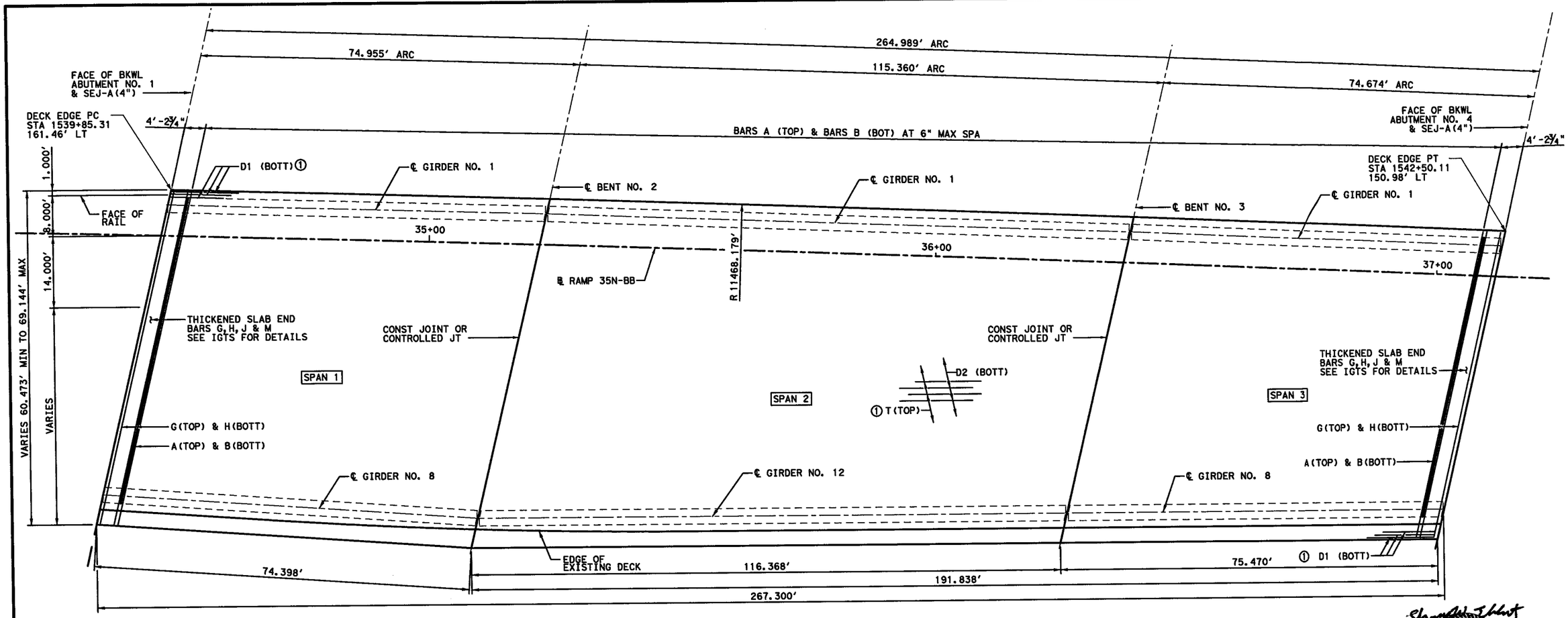

① 2" END COVER ON BARS D1 AND T.

PLAN

SHANE W. EBBERT 102017 LICENSED PROFESSIONAL ENGINEER STATE OF TEXAS
7/6/12

DRAWING DATE: 3:37:26 PM 7/13/2012 FILENAME: S3BBR#WCB-NB#PB#01.DGN

HALFF
TBPE REGISTRATION NO. F-312

Texas Department of Transportation
© 2012

IH 35W FROM NORTH TARRANT PKWY TO IH 820

267.30' PRESTRESSED CONCRETE I-GIRDER UNIT

NB IH35W G.P. & EX. R. OVER WESTERN CENTER BLVD

SCALE: NTS

SHEET 1 OF 2

DESIGN	FED.RD. DIV.NO.	FEDERAL AID PROJECT NO.		HIGHWAY NO.
SWE	6	(SEE TITLE SHEET)		IH 35W
GRAPHICS SG	STATE	DISTRICT	COUNTY	SHEET NO.
CHECK PJR	TEXAS	FTW	TARRANT	1753
CHECK PJR	CONTROL	SECTION	JOB	
	0014	16	255, ETC.	

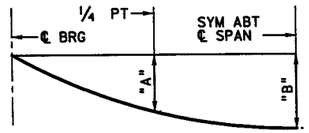

DEAD LOAD DEFLECTION DIAGRAM

CALCULATED DEFLECTIONS SHOWN ARE DUE TO THE CONCRETE SLAB ON INTERIOR GIRDERS ONLY (EC = 5000 KSI). ADJUST VALUES AS REQUIRED FOR EXTERIOR GIRDERS AND IF OPTIONAL SLAB FORMING IS USED. THESE VALUES MAY REQUIRE FIELD VERIFICATION.

SPAN NO.	GIRDER NO.	"A" FT	"B" FT
1	1	0.033	0.045
1	2-7	0.036	0.051
1	8	0.032	0.044
2	1-3	0.143	0.207
2	4-8	0.145	0.210
2	9-11	0.148	0.213
2	12	0.157	0.223
3	1	0.029	0.041
3	2-7	0.033	0.049
3	8	0.031	0.044

TABLE OF SECTION DEPTHS

SPAN NO.	GIRDER NO.	"X" AT ℄ BRG	"Y" AT ℄ BRG	"Z" AT ℄ SPAN②
1	ALL	11"	4'-9"	10"
2	ALL	11"	4'-9"	9½"
3	ALL	11"	4'-9"	10"

② THEORETICAL DIMENSION

BAR TABLE

BAR	SIZE
A	#5
B	#5
D	#5
G	#5
H	#5
J	#5
M	#5
T	#4

TABLE OF ESTIMATED QUANTITIES

SPAN	REINF CONC SLAB	PRESTR CONC I-GIRDERS (TX46) ④	CLASS "S" CONCRETE	REINFORCING STEEL ③
NO.	SF	LF	CY	Lb
1	5,073	593.3	125.3	32,795
2	7,725	1,384.2	190.8	50,219
3	4,701	597.0	116.1	30,557
TOTAL	17,499	2,574.5	432.1	113,571

③ REINFORCING STEEL WEIGHT IS CALCULATED USING AN APPROXIMATE FACTOR OF 6.5 LBS PER SQ FT.

④ LENGTHS SHOWN ARE BOTTOM OF GIRDER FLANGE LENGTHS WITH ADJUSTMENTS MADE FOR BEAM SLOPE. SEE GIRDER LAYOUT FOR GIRDER LENGTHS.

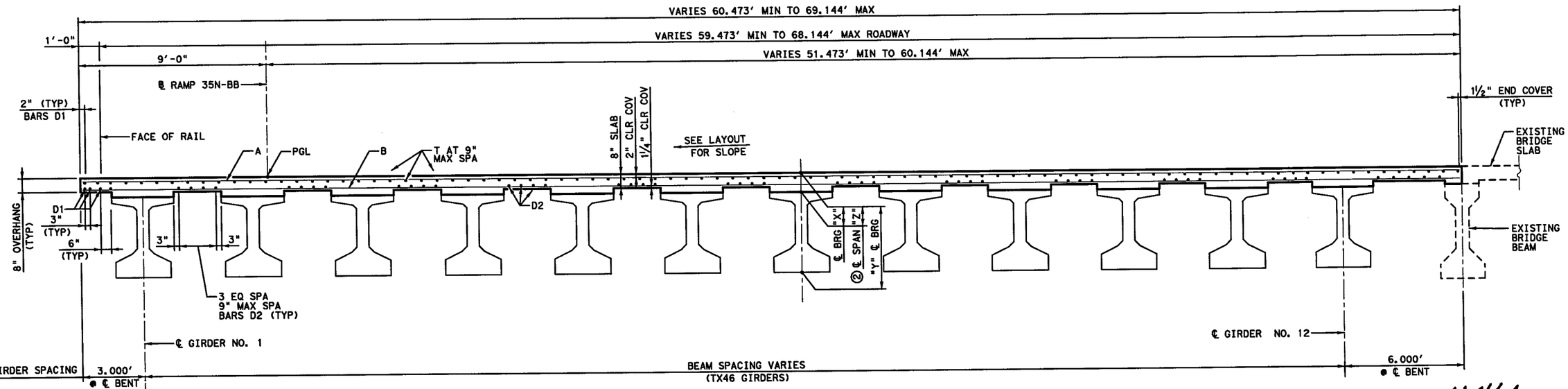

TYPICAL TRANSVERSE SECTION

STATE OF TEXAS
SHANE W. EBBERT
102017
LICENSED PROFESSIONAL ENGINEER
7/6/12

GENERAL NOTES:

1. DESIGNED ACCORDING TO AASHTO LRFD BRIDGE DESIGN SPECIFICATIONS, 5TH EDITION (2010).
2. SEE PCP OR PMDF STANDARDS FOR DETAILS AND QUANTITY ADJUSTMENTS IF EITHER OF THESE OPTIONS ARE USED.
3. SEE IGTS STANDARD FOR THICKENED SLAB END DETAILS.
4. ALL REINFORCING STEEL SHALL BE GRADE 60 AND EPOXY COATED.
5. CLASS "S"(HPC) CONCRETE STRENGTH F'C = 4,000 PSI.
6. BAR LAPS, WHERE REQUIRED, WILL BE AS FOLLOWS: EPOXY COATED #4 = 2'-1"
   #5 = 2'-7"

HALFF
TBPE REGISTRATION NO. F-312

Texas Department of Transportation
© 2012

IH 35W FROM NORTH TARRANT PKWY TO IH 820

267.30' PRESTRESSED CONCRETE I-GIRDER UNIT

NB IH35W G.P. & EX. R. OVER WESTERN CENTER BLVD

SCALE: NTS — SHEET 2 OF 2

DESIGN	FED. RD. DIV. NO.	FEDERAL AID PROJECT NO.		HIGHWAY NO.
SWE	6	(SEE TITLE SHEET)		IH 35W
GRAPHICS SG	STATE	DISTRICT	COUNTY	SHEET NO.
CHECK PJR	TEXAS	FTW	TARRANT	1754
CHECK PJR	CONTROL	SECTION	JOB	
	0014	16	255, ETC.	

DRAWING DATE: 7/13/2012 3:24:05 PM FILENAME: S3BBR*WCB-NB*PB*02.DGN

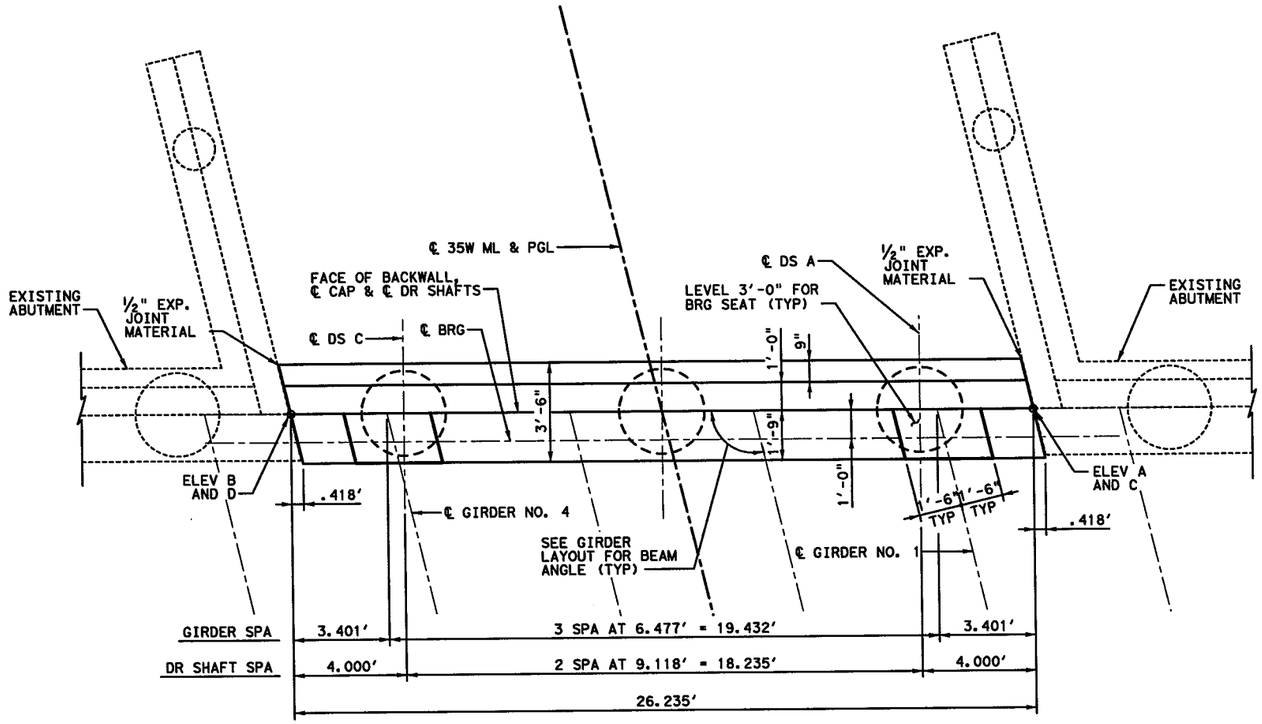

PLAN

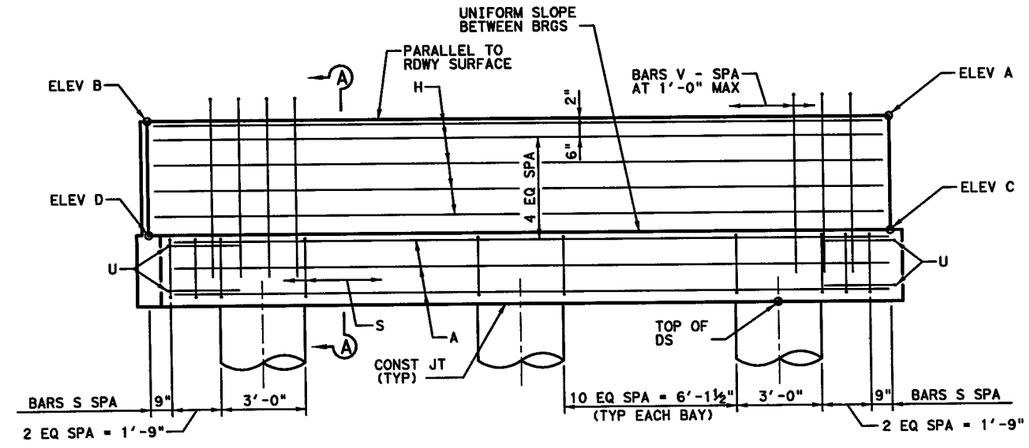

ELEVATION

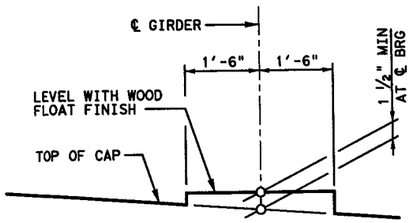

BEARING SEAT DETAIL

(BEARING SURFACE SHALL BE CLEAN AND FREE OF ALL LOOSE MATERIAL BEFORE PLACING BEARING PAD)

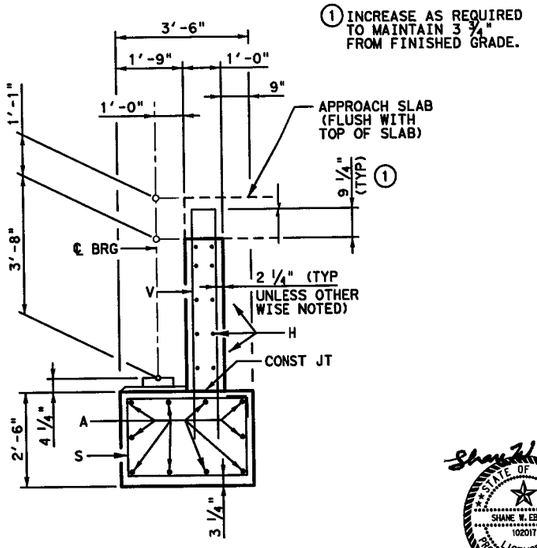

SECTION A-A

TABLE OF ELEVATIONS				
CAP	ELEV A	ELEV B	ELEV C	ELEV D
	630.88	630.86	626.86	626.84
TOP OF DS	DS A	DS B	DS C	
	624.43	624.60	624.42	
SHAFT TIP	574.43	574.60	574.42	
AS-BUILT SHAFT TIP				

STATE OF TEXAS — SHANE M. EBBERT 102017 — LICENSED PROFESSIONAL ENGINEER

7/6/12

HALFF
TBPE REGISTRATION NO. F-312

Texas Department of Transportation

© 2012

IH 35W FROM NORTH TARRANT PKWY TO IH 820

ABUTMENT 1 DETAILS

IH35W MANAGED LANES OVER WESTERN CENTER BLVD

SCALE: NTS — SHEET 1 OF 2

DESIGN	FED. RD. DIV. NO.	FEDERAL AID PROJECT NO.		HIGHWAY NO.
SWE	6	(SEE TITLE SHEET)		IH 35W
GRAPHICS SG	STATE	DISTRICT	COUNTY	SHEET NO.
CHECK PJR	TEXAS	FTW	TARRANT	1755
CHECK PJR	CONTROL	SECTION	JOB	
	0014	16	255, ETC.	

DRAWING DATE: 3:24:12 PM 7/13/2012 FILENAME: S3BBR*WCB-ML*AB*01.dgn

TABLE OF ESTIMATED QUANTITIES

BAR	NO.	SIZE	LENGTH	WEIGHT
A	10	#11	25'-3"	1,342
H	10	# 6	25'-9"	387
S	28	# 5	11'-4"	331
U	4	# 6	8'-1"	49
V	27	# 5	12'-9"	359
REINFORCING STEEL			LB	2,468
CL "C" CONC (HPC) (ABUT)			CY	12.4

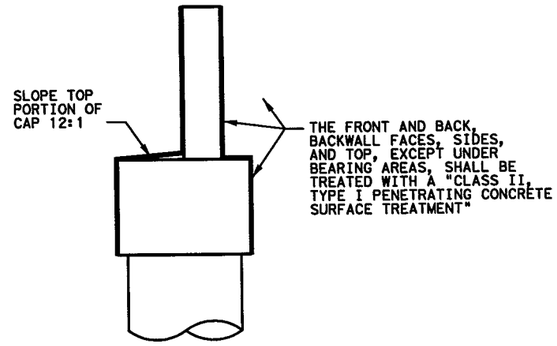

CONCRETE SURFACE TREATMENT DETAIL

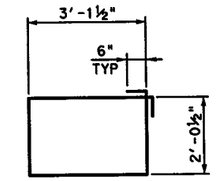

BARS S

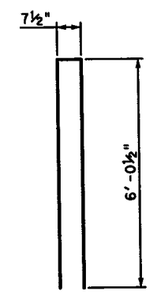

BARS V

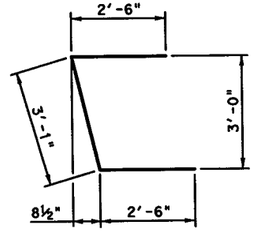

BARS U

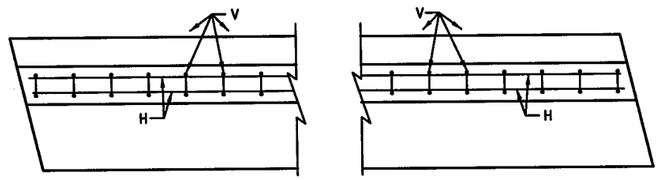

BACKWALL

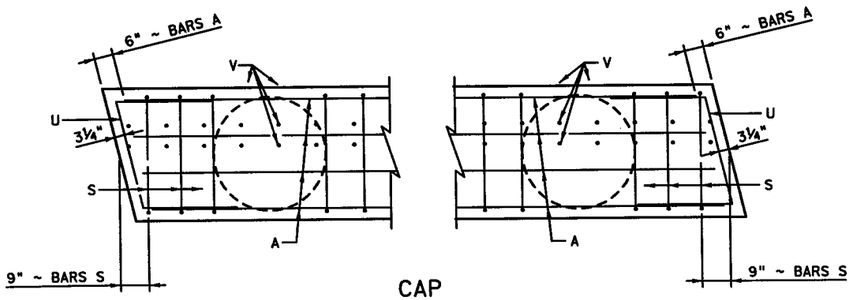

CAP

CORNER DETAILS

GENERAL NOTES:

1. DESIGNED ACCORDING TO AASHTO LRFD BRIDGE DESIGN SPECIFICATIONS, 5TH EDITION (2010).
2. CLASS "C" (HPC) CONCRETE STRENGTH F'C = 3,600 PSI.
3. ALL CAP AND WALL REINFORCING SHALL BE GRADE 60.
4. SEE FOUNDATION DETAIL SHEET, FD, FOR ALL FOUNDATION DETAILS AND NOTES.
5. CALCULATED FOUNDATION LOADS:
   CAP DR SHAFT = 100 TONS/DR SHAFT
6. SEE CONCRETE RIPRAP STANDARD SHEET, CRR, FOR RIPRAP ATTACHMENT DETAILS, IF APPLICABLE.

HALFF
TBPE REGISTRATION NO. F-312

Texas Department of Transportation
© 2012

IH 35W FROM NORTH TARRANT PKWY TO IH 820

ABUTMENT 1 DETAILS

IH35W MANAGED LANES OVER WESTERN CENTER BLVD

SCALE: NTS — SHEET 2 OF 2

DESIGN	FED. RD. DIV. NO.	FEDERAL AID PROJECT NO.		HIGHWAY NO.
SWE	6	(SEE TITLE SHEET)		IH 35W
GRAPHICS SG	STATE	DISTRICT	COUNTY	SHEET NO.
CHECK PJR	TEXAS	FTW	TARRANT	1756
CHECK PJR	CONTROL	SECTION	JOB	
	0014	16	255, ETC.	

DRAWING DATE: 3:24:18 PM 7/13/2012 FILENAME: S3BBR*WCB-ML*AB*02.dgn

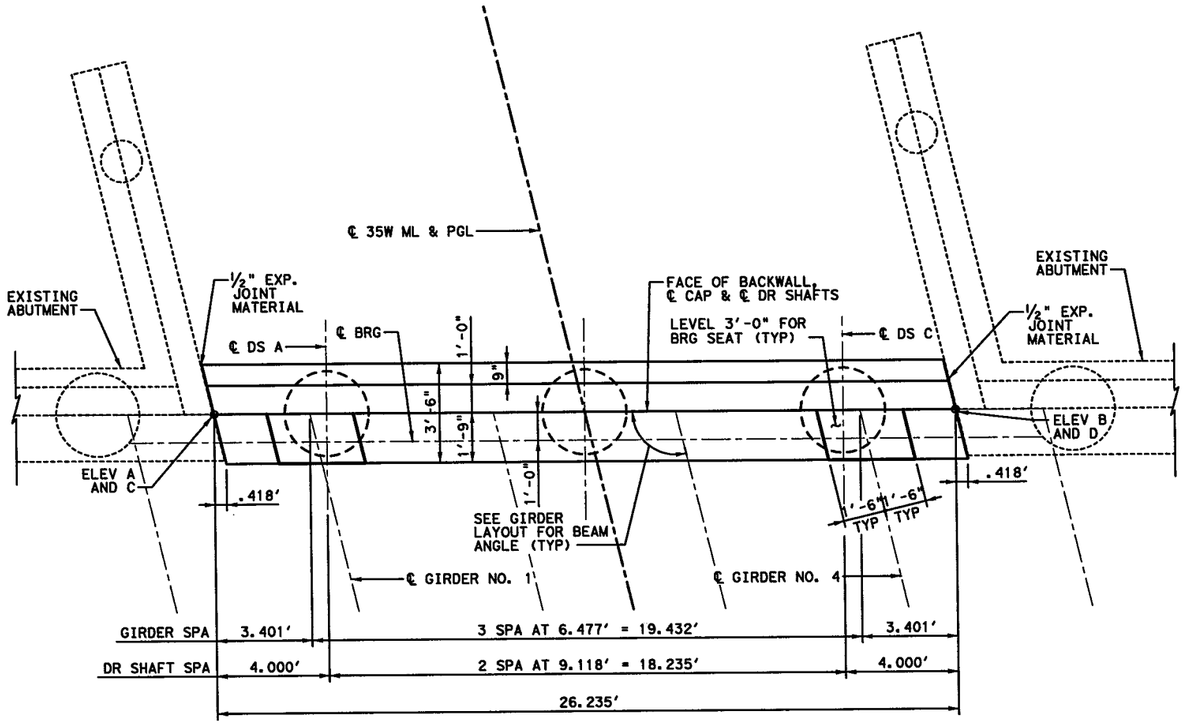

PLAN

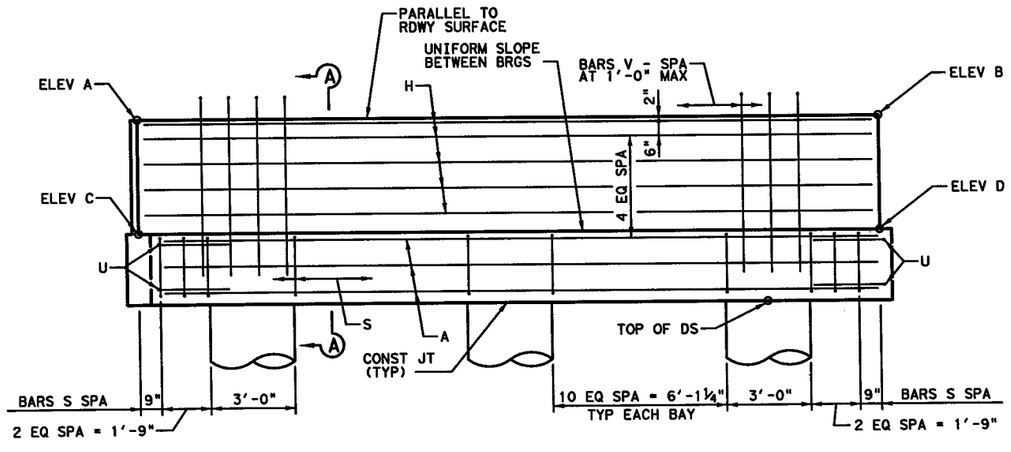

ELEVATION

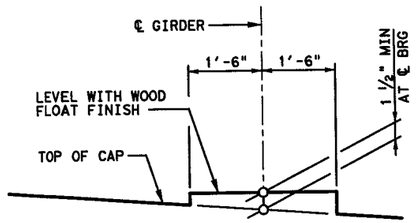

BEARING SEAT DETAIL

(BEARING SURFACE SHALL BE CLEAN AND FREE OF ALL LOOSE MATERIAL BEFORE PLACING BEARING PAD)

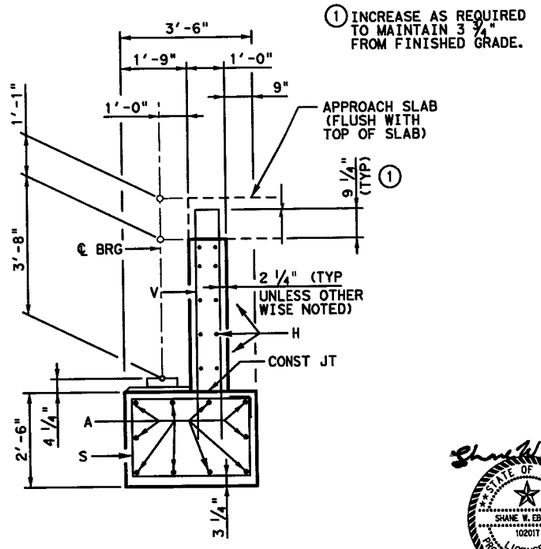

SECTION A-A

TABLE OF ELEVATIONS

CAP	ELEV A	ELEV B	ELEV C	ELEV D
	630.15	630.20	626.13	626.18
TOP OF DS	DS A	DS B	DS C	
	623.72	623.91	623.75	
SHAFT TIP	573.72	573.91	573.75	
AS-BUILT SHAFT TIP				

HALFF
TBPE REGISTRATION NO. F-312

Texas Department of Transportation
© 2012

IH 35W FROM NORTH TARRANT PKWY TO IH 820

ABUTMENT 4 DETAILS

IH35W MANAGED LANES OVER WESTERN CENTER BLVD

SCALE: NTS — SHEET 1 OF 2

DESIGN	FED.RD. DIV. NO.	FEDERAL AID PROJECT NO.		HIGHWAY NO.
SWE	6	(SEE TITLE SHEET)		IH 35W
GRAPHICS SG	STATE	DISTRICT	COUNTY	SHEET NO.
CHECK PJR	TEXAS	FTW	TARRANT	1757
CHECK PJR	CONTROL 0014	SECTION 16	JOB 255, ETC.	

DRAWING DATE: 3:24:29 PM 7/13/2012 FILENAME: S3BBR#WCB-ML#AB#03.dgn

TABLE OF ESTIMATED QUANTITIES				
BAR	NO.	SIZE	LENGTH	WEIGHT
A	10	#11	25'-3"	1,342
H	10	# 6	25'-9"	387
S	28	# 5	11'-4"	331
U	4	# 6	8'-1"	49
V	27	# 5	12'-9"	359
REINFORCING STEEL			LB	2,468
CL "C" CONC (HPC) (ABUT)			CY	12.4

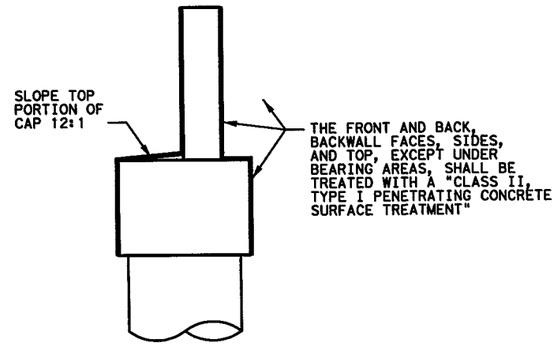

CONCRETE SURFACE TREATMENT DETAIL

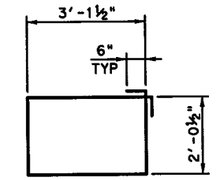

BARS S

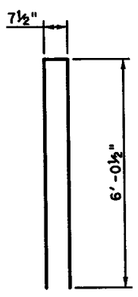

BARS V

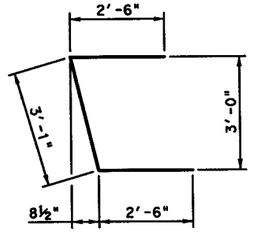

BARS U

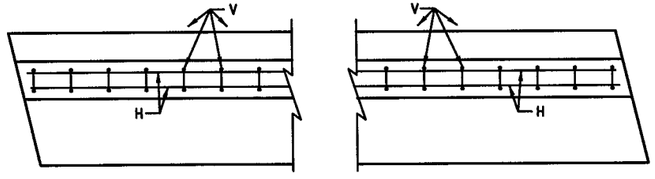

BACKWALL

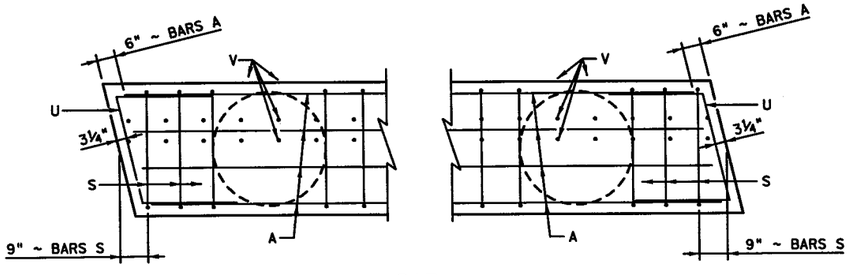

CAP

CORNER DETAILS

GENERAL NOTES:

1. DESIGNED ACCORDING TO AASHTO LRFD BRIDGE DESIGN SPECIFICATIONS, 5TH EDITION (2010).
2. CLASS "C" (HPC) CONCRETE STRENGTH F'C = 3,600 PSI.
3. ALL CAP AND WALL REINFORCING SHALL BE GRADE 60.
4. SEE FOUNDATION DETAIL SHEET, FD, FOR ALL FOUNDATION DETAILS AND NOTES.
5. CALCULATED FOUNDATION LOADS:
   CAP DR SHAFT = 100 TONS/DR SHAFT
6. SEE CONCRETE RIPRAP STANDARD SHEET, CRR, FOR RIPRAP ATTACHMENT DETAILS, IF APPLICABLE.

STATE OF TEXAS
SHANE W. EBBERT
102017
LICENSED PROFESSIONAL ENGINEER
7/6/12

HALFF
TBPE REGISTRATION NO. F-312

Texas Department of Transportation
© 2012

IH 35W FROM NORTH TARRANT PKWY TO IH 820

ABUTMENT 4 DETAILS

IH35W MANAGED LANES OVER WESTERN CENTER BLVD

SCALE: NTS — SHEET 2 OF 2

DESIGN	FED. RD. DIV. NO.	FEDERAL AID PROJECT NO.		HIGHWAY NO.
SWE	6	(SEE TITLE SHEET)		IH 35W
GRAPHICS	STATE	DISTRICT	COUNTY	SHEET NO.
SG	TEXAS	FTW	TARRANT	
CHECK	CONTROL	SECTION	JOB	1758
PJR	0014	16	255, ETC.	
CHECK				
PJR				

DRAWING DATE: 3:24:35 PM 7/13/2012 FILENAME: S3BBR*WCB-ML*AB*04.dgn

GENERAL NOTES:

1. DESIGNED ACCORDING TO AASHTO LRFD BRIDGE DESIGN SPECIFICATIONS, 5TH EDITION (2010).
2. CLASS "C"(HPC) CONCRETE STRENGTH F'C = 3,600 PSI.
3. ALL REINFORCING STEEL SHALL BE GRADE 60.
4. SEE FOUNDATION DETAIL SHEET, FD, FOR ALL FOUNDATION DETAILS AND NOTES.
5. CALCULATED FOUNDATION LOADS:
   BENT 2 = 199 TONS/DR SHAFT

② ADJUST BARS V LENGTH BY 1 FT AND BARS Z LENGTH BY 15.74 FT FOR EACH LINEAR FOOT OF VARIATION IN "H" VALUE.

③ ADJUST REINFORCING STEEL TOTAL BY 133 LBS AND CLASS "C" CONCRETE TOTAL BY 0.7854 CY FOR EACH LINEAR FOOT OF VARIATION IN "H" VALUE.

④ TOP OF DRILLED SHAFT ELEVATIONS WERE ESTIMATED BASED ON GROUND ELEVATION INFORMATION AVAILABLE AT THE TIME OF DESIGN. CONTRACTOR SHALL CONFIRM THESE ELEVATIONS PRIOR TO DRILLING.

② TABLE OF COLUMN QUANTITIES

BENT	"H"	CLASS "C" CONC (3 COLS)	BARS V 30 ~ #9		BARS Z 3 ~ #3 SPIRAL	
NO.	FT	CY	LENGTH	WEIGHT	LENGTH	WEIGHT
2	18	14.2	20'-3"	2,066	283'-4"	320

③ TOTAL ESTIMATED QUANTITIES

REINF STEEL	CLASS "C" CONC
LB	CY
4,423	26.8

TABLE OF CONSTANT QUANTITIES

BAR	NO.	SIZE	LENGTH	WEIGHT
A	5	#11	28'-2"	748
B	4	#11	26'-8"	568
D	4	1 1/4"D	1'-8"	28
S	28	#5	13'-6"	395
T	10	#5	26'-8"	278
U	2	#5	9'-8"	20
REINFORCING STEEL			LB	2,037
CL "C" CONC (HPC)(BENT)			CY	12.6

TABLE OF ELEVATIONS

CAP	ELEV A	ELEV B		
	626.91	626.91		
COLUMNS	COL A	COL B	COL C	
	623.49	623.69	623.49	
④ TOP OF DS	DS A	DS B	DS C	
	605.49	605.69	605.49	
SHAFT TIP	573.49	573.69	573.49	
AS-BUILT SHAFT TIP				

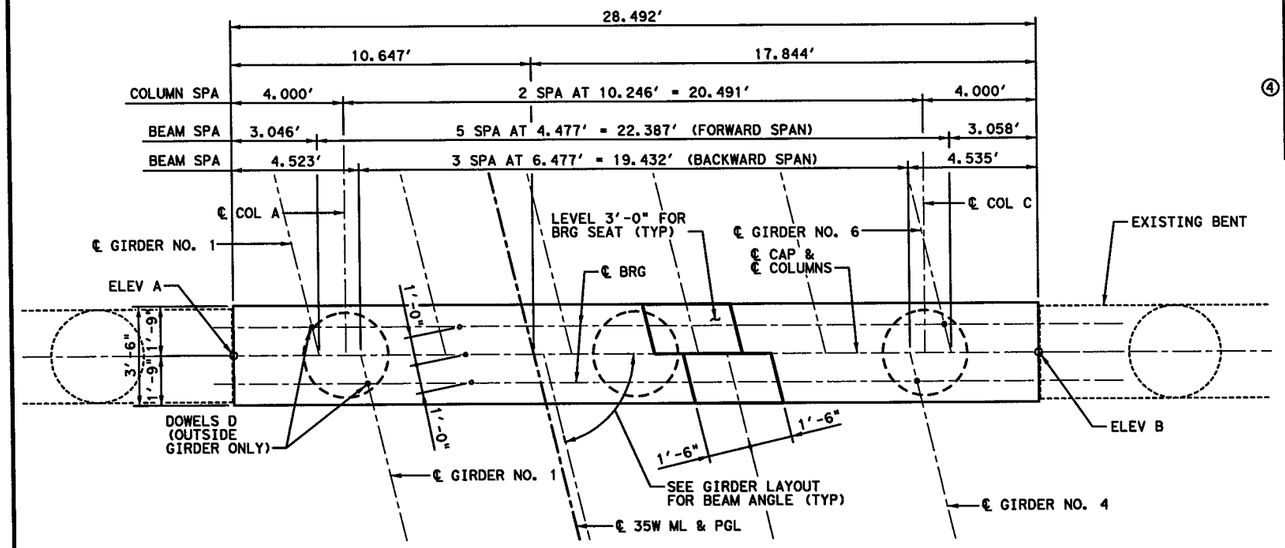

PLAN

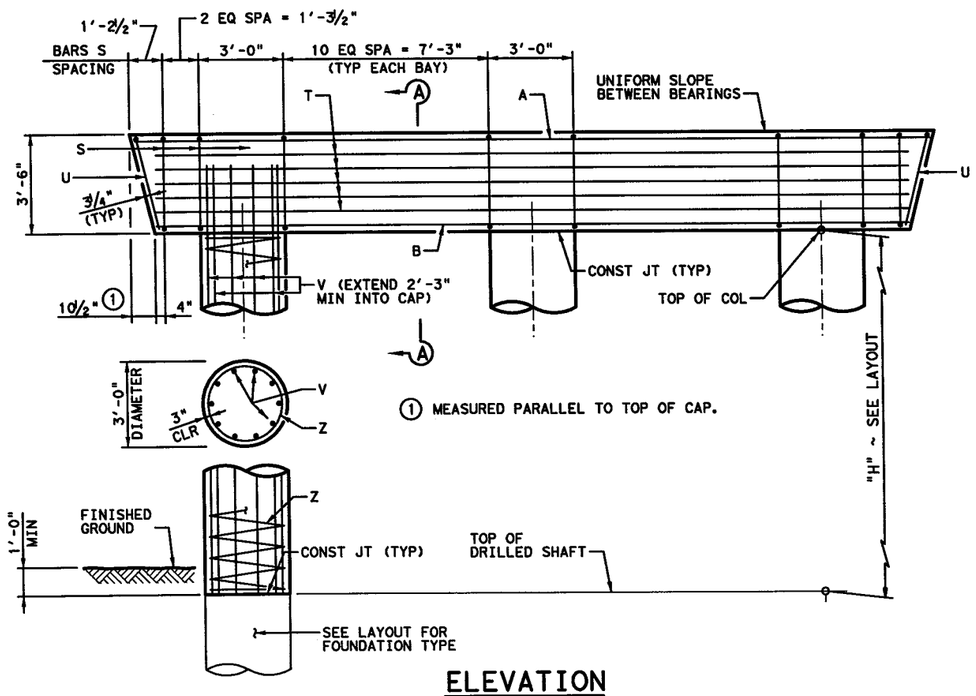

ELEVATION

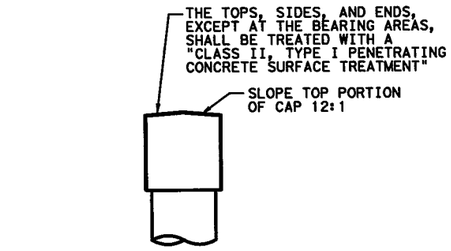

CONCRETE SURFACE TREATMENT DETAIL

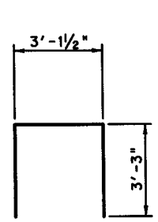

BARS U

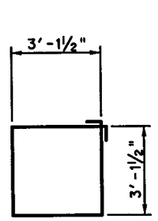

BARS S

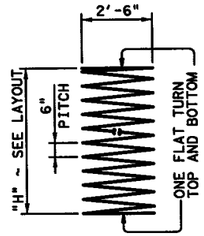

BARS Z

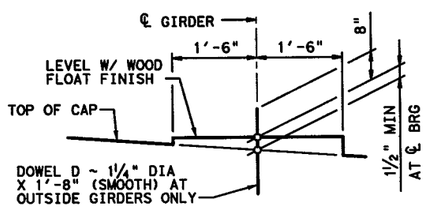

BEARING SEAT DETAIL

(BEARING SURFACE MUST BE CLEAN AND FREE OF ALL LOOSE MATERIAL BEFORE PLACING BEARING PAD.)

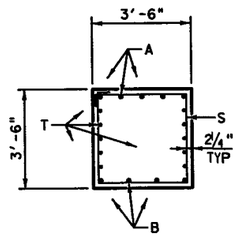

SECTION A-A

STATE OF TEXAS
SHANE W. EBBERT
102017
LICENSED PROFESSIONAL ENGINEER
7/6/12

HALFF
TBPE REGISTRATION NO. F-312

Texas Department of Transportation

© 2012

IH 35W FROM NORTH TARRANT PKWY TO IH 820

INTERIOR BENT NO. 2

IH35W MANAGED LANES OVER WESTERN CENTER BLVD

SCALE: NTS — SHEET 1 OF 1

DESIGN	FED.RD. DIV.NO.	FEDERAL AID PROJECT NO.		HIGHWAY NO.
SWE	6	(SEE TITLE SHEET)		IH 35W
GRAPHICS	STATE	DISTRICT	COUNTY	SHEET NO.
SG	TEXAS	FTW	TARRANT	1759
CHECK	CONTROL	SECTION	JOB	
PJR	0014	16	255, ETC.	
CHECK				
PJR				

DRAWING DATE: 3:24:45 PM 7/13/2012 FILENAME: S3BBR*WCB-ML*IB*01.dgn

GENERAL NOTES:

1. DESIGNED ACCORDING TO AASHTO LRFD BRIDGE DESIGN SPECIFICATIONS, 5TH EDITION (2010).
2. CLASS "C"(HPC) CONCRETE STRENGTH F'C = 3,600 PSI.
3. ALL REINFORCING STEEL SHALL BE GRADE 60.
4. SEE FOUNDATION DETAIL SHEET, FD, FOR ALL FOUNDATION DETAILS AND NOTES.
5. CALCULATED FOUNDATION LOADS:
   BENT 3 = 199 TONS/DR SHAFT

② ADJUST BARS V LENGTH BY 1 FT AND BARS Z LENGTH BY 15.74 FT FOR EACH LINEAR FOOT OF VARIATION IN "H" VALUE.

③ ADJUST REINFORCING STEEL TOTAL BY 140 LBS AND CLASS "C" CONCRETE TOTAL BY 0.7854 CY FOR EACH LINEAR FOOT OF VARIATION IN "H" VALUE.

④ TOP OF DRILLED SHAFT ELEVATIONS WERE ESTIMATED BASED ON GROUND ELEVATION INFORMATION AVAILABLE AT THE TIME OF DESIGN. CONTRACTOR SHALL CONFIRM THESE ELEVATIONS PRIOR TO DRILLING.

② TABLE OF COLUMN QUANTITIES

BENT	"H"	CLASS "C" CONC (3 COLS)	BARS V 30 ~ #9		BARS Z 3 ~ #3 SPIRAL	
NO.	FT	CY	LENGTH	WEIGHT	LENGTH	WEIGHT
3	18	14.2	20'-3"	2,066	283'-4"	320

③ TOTAL ESTIMATED QUANTITIES

REINF STEEL	CLASS "C" CONC
LB	CY
4,423	26.8

TABLE OF CONSTANT QUANTITIES

BAR	NO.	SIZE	LENGTH	WEIGHT
A	5	#11	28'-2"	748
B	4	#11	26'-8"	568
D	4	1 1/4"D	1'-8"	28
S	28	#5	13'-6"	395
T	10	#5	26'-8"	278
U	2	#5	9'-8"	20
REINFORCING STEEL			LB	2,037
CL "C" CONC (HPC)(BENT)			CY	12.6

TABLE OF ELEVATIONS

CAP	ELEV A	ELEV B		
	626.59	626.62		
COLUMNS	COL A	COL B	COL C	
	623.18	623.39	623.20	
④ TOP OF DS	DS A	DS B	DS C	
	605.18	605.39	605.20	
SHAFT TIP	573.18	573.39	573.20	
AS-BUILT SHAFT TIP				

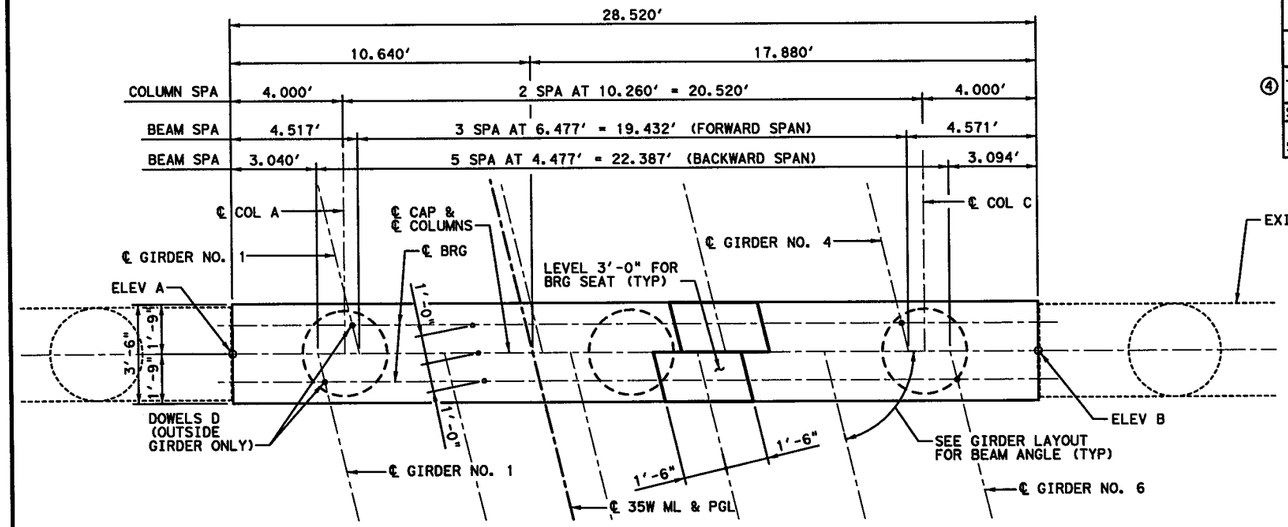

PLAN

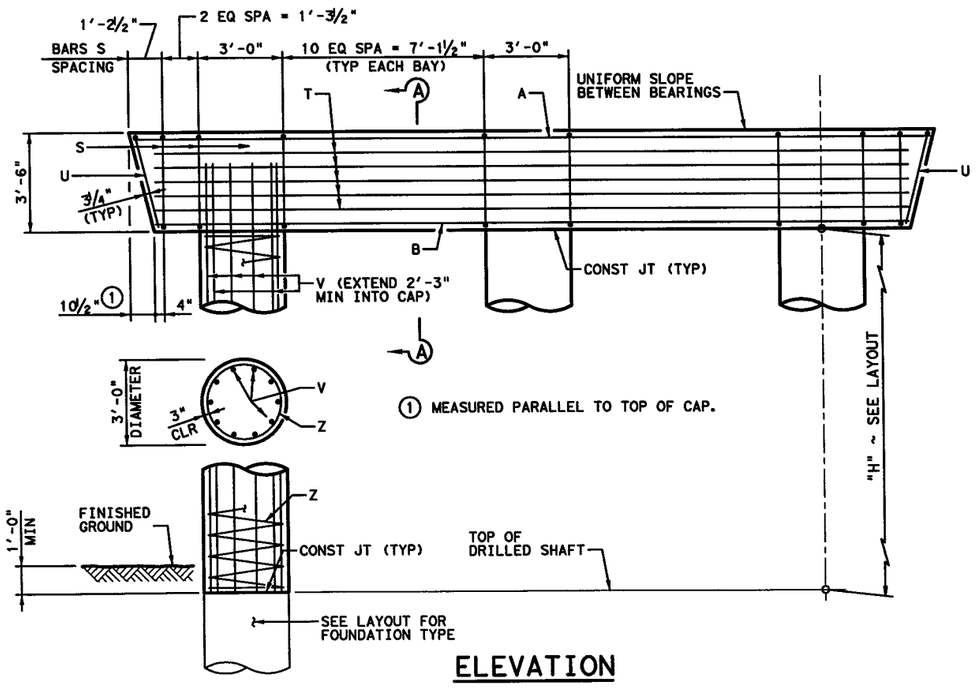

ELEVATION

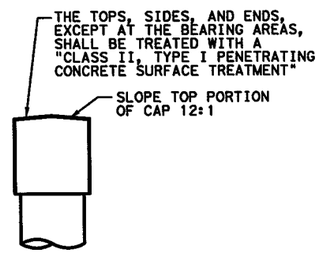

CONCRETE SURFACE TREATMENT DETAIL

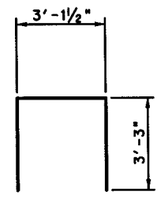

BARS U

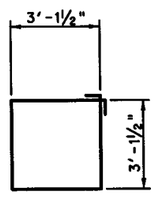

BARS S

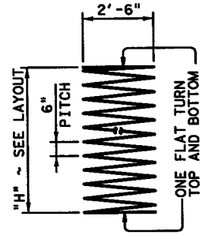

BARS Z

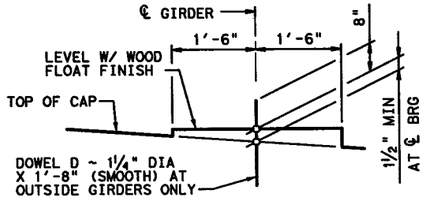

BEARING SEAT DETAIL

(BEARING SURFACE MUST BE CLEAN AND FREE OF ALL LOOSE MATERIAL BEFORE PLACING BEARING PAD.)

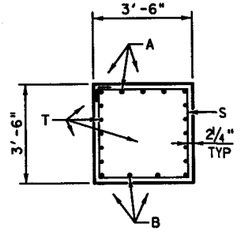

SECTION A-A

Shane W. Ebbert
STATE OF TEXAS
SHANE W. EBBERT
102017
LICENSED PROFESSIONAL ENGINEER
7/6/12

HALFF
TBPE REGISTRATION NO. F-312

Texas Department of Transportation
© 2012

IH 35W FROM NORTH TARRANT PKWY TO IH 820

INTERIOR BENT NO. 3

IH35W MANAGED LANES OVER WESTERN CENTER BLVD

SCALE: NTS — SHEET 1 OF 1

DESIGN	FED.RD. DIV.NO.	FEDERAL AID PROJECT NO.		HIGHWAY NO.
SWE	6	(SEE TITLE SHEET)		IH 35W
GRAPHICS SG	STATE	DISTRICT	COUNTY	SHEET NO.
CHECK PJR	TEXAS	FTW	TARRANT	1760
CHECK PJR	CONTROL	SECTION	JOB	
	0014	16	255, ETC.	

DRAWING DATE: 7/13/2012 3:24:52 PM FILENAME: S3BBR#WCB-ML#IB#02.dgn

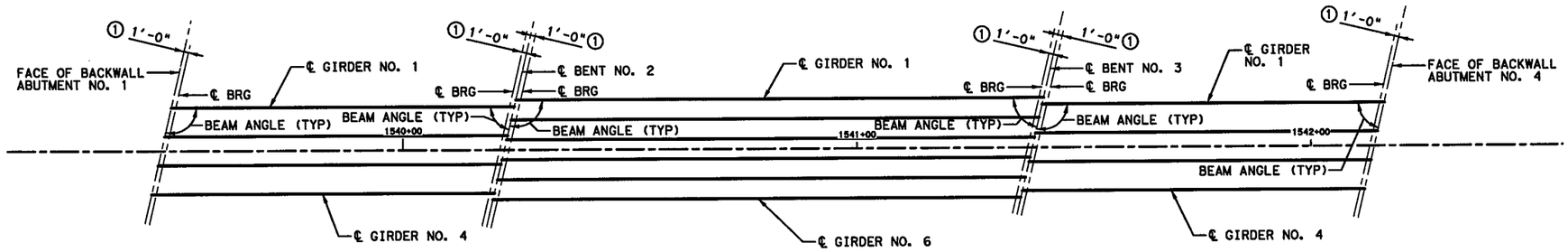

SPAN 1
(TX46 GIRDERS)

SPAN 2
(TX46 GIRDERS)

SPAN 3
(TX46 GIRDERS)

① SEE IGEB STANDARD FOR ORIENTATION OF DIMENSION.

② GIRDER LENGTHS SHOWN ARE BOTTOM GIRDER FLANGE LENGTHS WITH ADJUSTMENTS MADE FOR BEAM SLOPE.

BENT REPORT

ABUT NO. 1 (S87°10'26.33"E)
DISTANCE BETWEEN STATION LINE AND BEAM 1 9.45' L

		BEAM SPAC. (C.L. BENT)	BEAM ANGLE D M S
SPAN 1	BEAM 1	0.000	103 26 20
	BEAM 2	6.477	103 26 20
	BEAM 3	6.477	103 26 20
	BEAM 4	6.477	103 26 20
	TOTAL	19.432	

BENT NO. 2 (S87°10'26.33"E)
DISTANCE BETWEEN STATION LINE AND BEAM 1 SPAN 1 9.45' L
DISTANCE BETWEEN STATION LINE AND BEAM 1 SPAN 2 9.91' L

		BEAM SPAC. (C.L. BENT)	BEAM ANGLE D M S
SPAN 1	BEAM 1	0.000	76 33 40
	BEAM 2	6.477	76 33 40
	BEAM 3	6.477	76 33 40
	BEAM 4	6.477	76 33 40
	TOTAL	19.432	
SPAN 2	BEAM 1	0.000	103 26 20
	BEAM 2	4.477	103 26 20
	BEAM 3	4.477	103 26 20
	BEAM 4	4.477	103 26 20
	BEAM 5	4.477	103 26 20
	BEAM 6	4.477	103 26 20
	TOTAL	22.387	

BENT NO. 3 (S87°10'26.33"E)
DISTANCE BETWEEN STATION LINE AND BEAM 1 SPAN 2 9.91' L
DISTANCE BETWEEN STATION LINE AND BEAM 1 SPAN 3 9.45' L

		BEAM SPAC. (C.L. BENT)	BEAM ANGLE D M S
SPAN 2	BEAM 1	0.000	76 33 40
	BEAM 2	4.477	76 33 40
	BEAM 3	4.477	76 33 40
	BEAM 4	4.477	76 33 40
	BEAM 5	4.478	76 33 40
	BEAM 6	4.478	76 33 40
	TOTAL	22.387	
SPAN 3	BEAM 1	0.000	103 26 20
	BEAM 2	6.477	103 26 20
	BEAM 3	6.477	103 26 20
	BEAM 4	6.477	103 26 20
	TOTAL	19.432	

ABUTMENT NO. 4 (S87°10'26.33"E)
DISTANCE BETWEEN STATION LINE AND BEAM 1 9.45' L

		BEAM SPAC. (C.L. BENT)	BEAM ANGLE D M S
SPAN 3	BEAM 1	0.000	76 33 20
	BEAM 2	6.477	76 33 20
	BEAM 3	6.477	76 33 20
	BEAM 4	6.477	76 33 20
	TOTAL	19.432	

BEAM REPORT

BEAM REPORT, SPAN 1

	HORIZONTAL DISTANCE C-C BENT	C-C BRG.	TRUE DISTANCE BOT. BM. FLG. ②	BEAM SLOPE
BEAM 1	75.463	73.407	74.95	0.0010
BEAM 2	75.463	73.407	74.95	0.0011
BEAM 3	75.463	73.407	74.95	0.0011
BEAM 4	75.463	73.407	74.95	0.0012

BEAM REPORT, SPAN 2

	HORIZONTAL DISTANCE C-C BENT	C-C BRG.	TRUE DISTANCE BOT. BM. FLG. ②	BEAM SLOPE
BEAM 1	116.370	114.314	115.87	-0.0027
BEAM 2	116.370	114.314	115.87	-0.0027
BEAM 3	116.370	114.314	115.87	-0.0026
BEAM 4	116.370	114.314	115.87	-0.0026
BEAM 5	116.370	114.314	115.87	-0.0025
BEAM 6	116.367	114.315	115.87	-0.0025

BEAM REPORT, SPAN 3

	HORIZONTAL DISTANCE C-C BENT	C-C BRG.	TRUE DISTANCE BOT. BM. FLG. ②	BEAM SLOPE
BEAM 1	75.476	73.416	74.96	-0.0064
BEAM 2	75.476	73.416	74.96	-0.0063
BEAM 3	75.476	73.416	74.96	-0.0063
BEAM 4	75.476	73.416	74.96	-0.0062

SHANE W. EBBERT
102017
LICENSED PROFESSIONAL ENGINEER
STATE OF TEXAS
7/6/12

HALFF
TBPE REGISTRATION NO. F-312

Texas Department of Transportation
© 2012

IH 35W FROM NORTH TARRANT PKWY TO IH 820

GIRDER LAYOUT

IH35W MANAGED LANES
OVER WESTERN CENTER BLVD

SCALE: NTS SHEET 1 OF 1

DESIGN	FED.RD. DIV.NO.	FEDERAL AID PROJECT NO.		HIGHWAY NO.
SWE	6	(SEE TITLE SHEET)		IH 35W
GRAPHICS	STATE	DISTRICT	COUNTY	SHEET NO.
SG				
CHECK	TEXAS	FTW	TARRANT	
PJR	CONTROL	SECTION	JOB	1761
CHECK	0014	16	255, ETC.	
PJR				

DRAWING DATE: 3:36:50 PM 7/13/2012 FILENAME: S3BBR*WCB-ML*GF*01.dgn

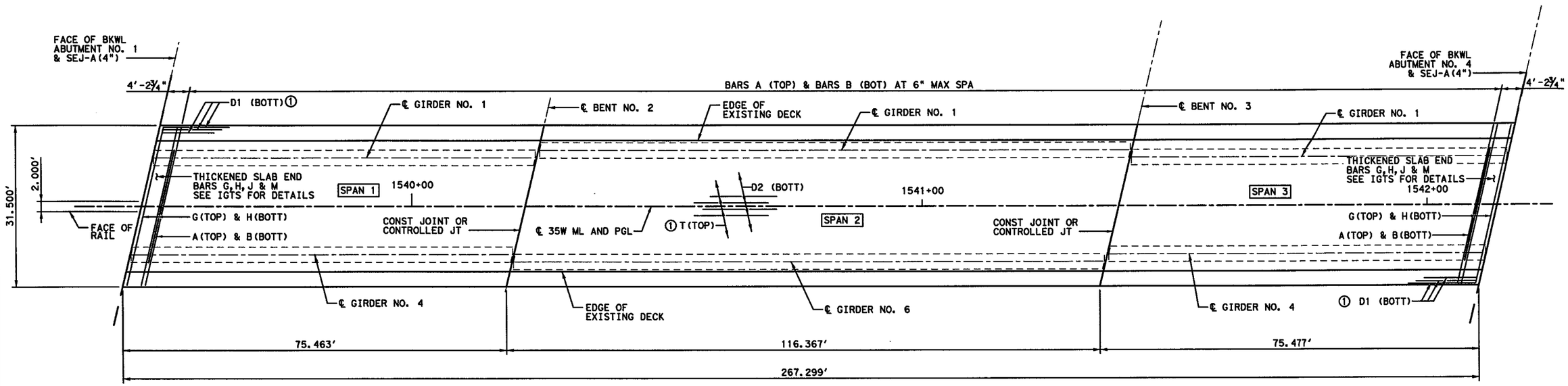

PLAN

① 2" END COVER ON BARS D1 AND T.

DRAWING DATE: 3:25:01 PM 7/13/2012 FILENAME: S3BBR#WCB-ML#PB#01.DGN

STATE OF TEXAS
SHANE W. EBBERT
102017
LICENSED PROFESSIONAL ENGINEER
7/6/12

HALFF
TBPE REGISTRATION NO. F-312

Texas Department of Transportation
© 2012

IH 35W FROM NORTH TARRANT PKWY TO IH 820

267.30' PRESTRESSED CONCRETE I-GIRDER UNIT

IH 35W MANAGED LANES OVER WESTERN CENTER BLVD

SCALE: NTS

SHEET 1 OF 2

DESIGN	FED. RD. DIV. NO.	FEDERAL AID PROJECT NO.		HIGHWAY NO.
SWE	6	(SEE TITLE SHEET)		IH 35W
GRAPHICS	STATE	DISTRICT	COUNTY	SHEET NO.
SG	TEXAS	FTW	TARRANT	1762
CHECK	CONTROL	SECTION	JOB	
PJR	0014	16	255, ETC.	
CHECK				
PJR				

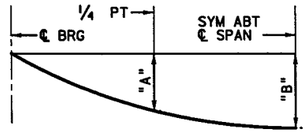

DEAD LOAD DEFLECTION DIAGRAM

CALCULATED DEFLECTIONS SHOWN ARE DUE TO THE CONCRETE SLAB ON INTERIOR GIRDERS ONLY (EC = 5000 KSI). ADJUST VALUES AS REQUIRED FOR EXTERIOR GIRDERS AND IF OPTIONAL SLAB FORMING IS USED. THESE VALUES MAY REQUIRE FIELD VERIFICATION.

SPAN NO.	GIRDER NO.	"A" FT	"B" FT
1	ALL	0.029	0.041
2	1,6	0.136	0.193
2	2-5	0.129	0.185
3	ALL	0.030	0.043

TABLE OF SECTION DEPTHS

SPAN NO.	GIRDER NO.	"X" AT ℄ BRG	"Y" AT ℄ BRG	"Z" AT ℄ SPAN②
1	ALL	11"	4'-9"	10"
2	1,6	11"	4'-9"	9¾"
2	2-5	11"	4'-9"	9"
3	ALL	11"	4'-9"	10"

② THEORETICAL DIMENSION

BAR TABLE

BAR	SIZE
A	#5
B	#5
D	#5
G	#5
H	#5
J	#5
M	#5
T	#4

TABLE OF ESTIMATED QUANTITIES

SPAN	REINF CONC SLAB	PRESTR CONC I-GIRDERS (TX46) ④	CLASS "S" CONCRETE	REINFORCING STEEL ③
NO.	SF	LF	CY	Lb
1	2,377	299.8	58.7	15,451
2	3,666	695.2	90.5	23,829
3	2,377	299.8	58.7	15,451
TOTAL	8,420	1294.8	208.1	54,731

③ REINFORCING STEEL WEIGHT IS CALCULATED USING AN APPROXIMATE FACTOR OF 6.5 LBS PER SQ FT.

④ LENGTHS SHOWN ARE BOTTOM OF GIRDER FLANGE LENGTHS WITH ADJUSTMENTS MADE FOR BEAM SLOPE. SEE GIRDER LAYOUT FOR GIRDER LENGTHS.

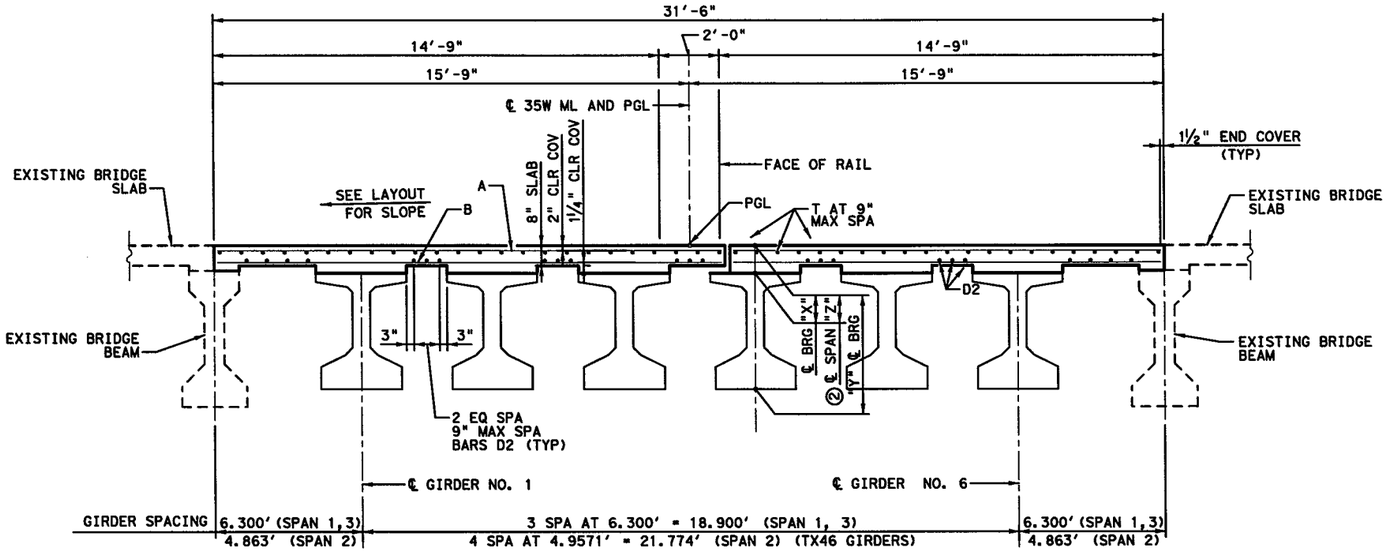

TYPICAL TRANSVERSE SECTION

GENERAL NOTES:

1. DESIGNED ACCORDING TO AASHTO LRFD BRIDGE DESIGN SPECIFICATIONS, 5TH EDITION (2010).
2. SEE PCP OR PMDF STANDARDS FOR DETAILS AND QUANTITY ADJUSTMENTS IF EITHER OF THESE OPTIONS ARE USED.
3. SEE IGTS STANDARD FOR THICKENED SLAB END DETAILS.
4. ALL REINFORCING STEEL SHALL BE GRADE 60 AND EPOXY COATED.
5. CLASS "S"(HPC) CONCRETE STRENGTH F'C = 4,000 PSI.
6. BAR LAPS, WHERE REQUIRED, WILL BE AS FOLLOWS: EPOXY COATED #4 = 2'-1"
   #5 = 2'-7"

STATE OF TEXAS
SHANE W. EBBERT
102017
LICENSED PROFESSIONAL ENGINEER
7/6/12

HALFF
TBPE REGISTRATION NO. F-312

Texas Department of Transportation
© 2012

IH 35W FROM NORTH TARRANT PKWY TO IH 820

267.30' PRESTRESSED CONCRETE I-GIRDER UNIT

IH35W MANAGED LANES OVER WESTERN CENTER BLVD

SCALE: NTS — SHEET 2 OF 2

DESIGN	FED. RD. DIV. NO.	FEDERAL AID PROJECT NO.		HIGHWAY NO.
SWE	6	(SEE TITLE SHEET)		IH 35W
GRAPHICS	STATE	DISTRICT	COUNTY	SHEET NO.
SG	TEXAS	FTW	TARRANT	1763
CHECK	CONTROL	SECTION	JOB	
PJR	0014	16	255, ETC.	
CHECK				
PJR				

DRAWING DATE: 3:25:14 PM 7/13/2012 FILENAME: S3BBR#WCB-ML#PB#02.DGN

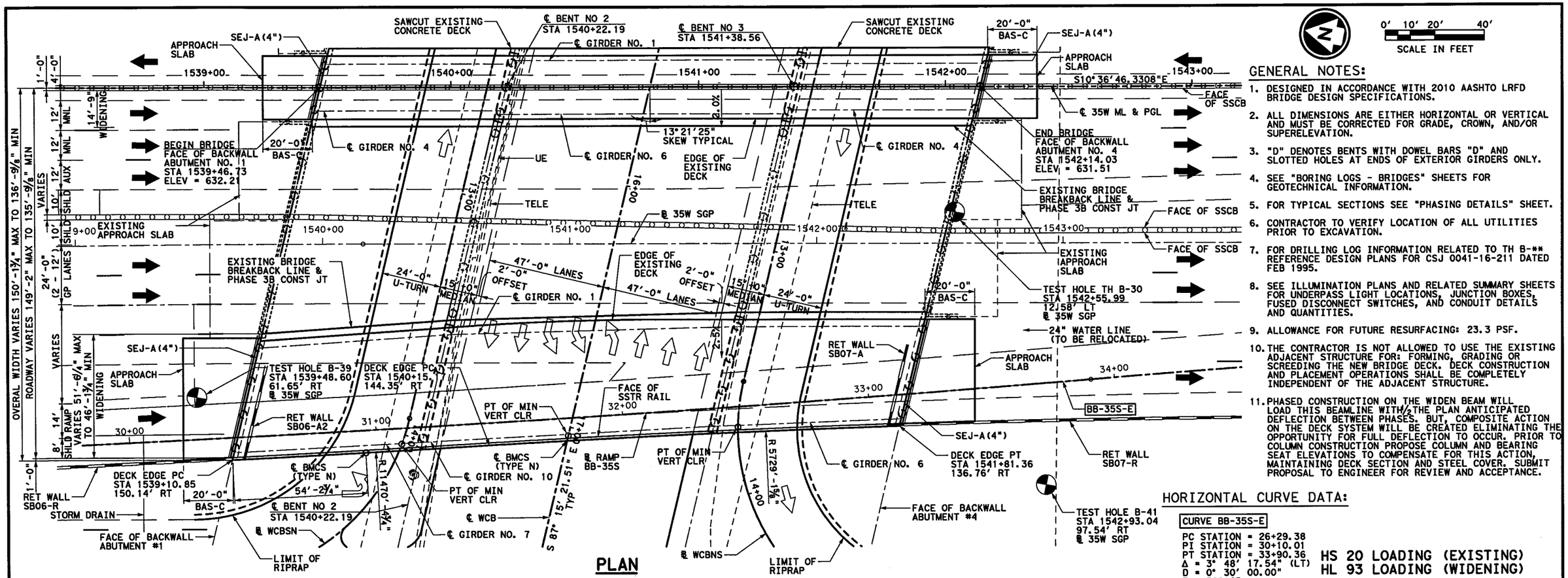

PLAN

GENERAL NOTES:

1. DESIGNED IN ACCORDANCE WITH 2010 AASHTO LRFD BRIDGE DESIGN SPECIFICATIONS.
2. ALL DIMENSIONS ARE EITHER HORIZONTAL OR VERTICAL AND MUST BE CORRECTED FOR GRADE, CROWN, AND/OR SUPERELEVATION.
3. "D" DENOTES BENTS WITH DOWEL BARS "D" AND SLOTTED HOLES AT ENDS OF EXTERIOR GIRDERS ONLY.
4. SEE "BORING LOGS - BRIDGES" SHEETS FOR GEOTECHNICAL INFORMATION.
5. FOR TYPICAL SECTIONS SEE "PHASING DETAILS" SHEET.
6. CONTRACTOR TO VERIFY LOCATION OF ALL UTILITIES PRIOR TO EXCAVATION.
7. FOR DRILLING LOG INFORMATION RELATED TO TH B-** REFERENCE DESIGN PLANS FOR CSJ 0041-16-211 DATED FEB 1995.
8. SEE ILLUMINATION PLANS AND RELATED SUMMARY SHEETS FOR UNDERPASS LIGHT LOCATIONS, JUNCTION BOXES, FUSED DISCONNECT SWITCHES, AND CONDUIT DETAILS AND QUANTITIES.
9. ALLOWANCE FOR FUTURE RESURFACING: 23.3 PSF.
10. THE CONTRACTOR IS NOT ALLOWED TO USE THE EXISTING ADJACENT STRUCTURE FOR: FORMING, GRADING OR SCREEDING THE NEW BRIDGE DECK. DECK CONSTRUCTION AND PLACEMENT OPERATIONS SHALL BE COMPLETELY INDEPENDENT OF THE ADJACENT STRUCTURE.
11. PHASED CONSTRUCTION ON THE WIDEN BEAM WILL LOAD THIS BEAMLINE WITH ½ THE PLAN ANTICIPATED DEFLECTION BETWEEN PHASES. BUT, COMPOSITE ACTION ON THE DECK SYSTEM WILL BE CREATED ELIMINATING THE OPPORTUNITY FOR FULL DEFLECTION TO OCCUR. PRIOR TO COLUMN CONSTRUCTION PROPOSE COLUMN AND BEARING SEAT ELEVATIONS TO COMPENSATE FOR THIS ACTION, MAINTAINING DECK SECTION AND STEEL COVER. SUBMIT PROPOSAL TO ENGINEER FOR REVIEW AND ACCEPTANCE.

HORIZONTAL CURVE DATA:

CURVE BB-35S-E

PC STATION = 26+29.38
PI STATION = 30+10.01
PT STATION = 33+90.36
Δ = 3° 48' 17.54" (LT)
D = 0° 30' 00.00"
T = 380.63
L = 760.97
R = 11,459.16

HS 20 LOADING (EXISTING)
HL 93 LOADING (WIDENING)

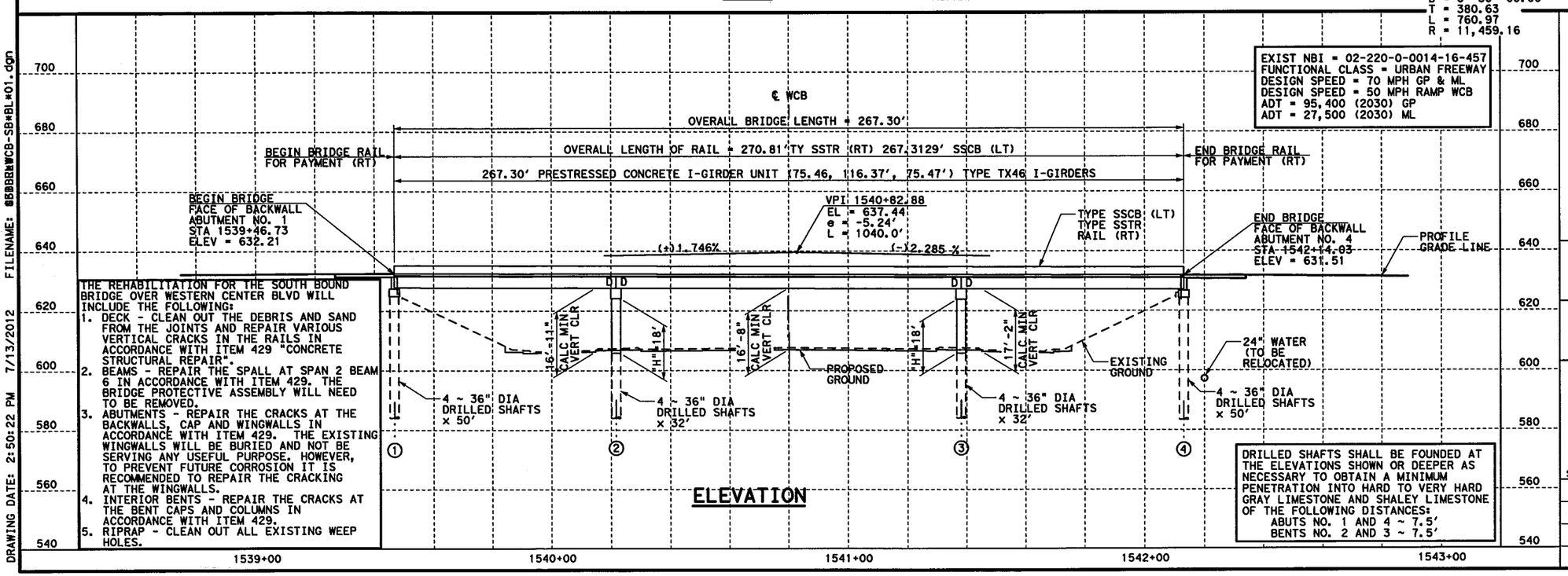

ELEVATION

EXIST NBI = 02-220-0-0014-16-457
FUNCTIONAL CLASS = URBAN FREEWAY
DESIGN SPEED = 70 MPH GP & ML
DESIGN SPEED = 50 MPH RAMP WCB
ADT = 95,400 (2030) GP
ADT = 27,500 (2030) ML

THE REHABILITATION FOR THE SOUTH BOUND BRIDGE OVER WESTERN CENTER BLVD WILL INCLUDE THE FOLLOWING:

1. DECK - CLEAN OUT THE DEBRIS AND SAND FROM THE JOINTS AND REPAIR VARIOUS VERTICAL CRACKS IN THE RAILS IN ACCORDANCE WITH ITEM 429 "CONCRETE STRUCTURAL REPAIR".
2. BEAMS - REPAIR THE SPALL AT SPAN 2 BEAM 6 IN ACCORDANCE WITH ITEM 429. THE BRIDGE PROTECTIVE ASSEMBLY WILL NEED TO BE REMOVED.
3. ABUTMENTS - REPAIR THE CRACKS AT THE BACKWALLS, CAP AND WINGWALLS IN ACCORDANCE WITH ITEM 429. THE EXISTING WINGWALLS WILL BE BURIED AND NOT BE SERVING ANY USEFUL PURPOSE. HOWEVER, TO PREVENT FUTURE CORROSION IT IS RECOMMENDED TO REPAIR THE CRACKING AT THE WINGWALLS.
4. INTERIOR BENTS - REPAIR THE CRACKS AT THE BENT CAPS AND COLUMNS IN ACCORDANCE WITH ITEM 429.
5. RIPRAP - CLEAN OUT ALL EXISTING WEEP HOLES.

DRILLED SHAFTS SHALL BE FOUNDED AT THE ELEVATIONS SHOWN OR DEEPER AS NECESSARY TO OBTAIN A MINIMUM PENETRATION INTO HARD TO VERY HARD GRAY LIMESTONE AND SHALEY LIMESTONE OF THE FOLLOWING DISTANCES:
ABUTS NO. 1 AND 4 ~ 7.5'
BENTS NO. 2 AND 3 ~ 7.5'

Shane W. Ebbert
STATE OF TEXAS
SHANE W. EBBERT
102017
LICENSED PROFESSIONAL ENGINEER
8/29/12

HALFF
TBPE REGISTRATION NO. F-312

Texas Department of Transportation
© 2012

IH 35W FROM NORTH TARRANT PKWY TO IH 820

BRIDGE LAYOUT

SB IH35W G.P., M.L., & ENT. R. OVER WESTERN CENTER BLVD

SCALE: 1" = 40' H & V — SHEET 1 OF 1

DESIGN	FED.RD. DIV.NO.	FEDERAL AID PROJECT NO.		HIGHWAY NO.
SWE	6	(SEE TITLE SHEET)		IH 35W
GRAPHICS SG	STATE	DISTRICT	COUNTY	SHEET NO.
CHECK PJR	TEXAS	FTW	TARRANT	1764
CHECK PJR	CONTROL	SECTION	JOB	
	0014	16	255, ETC.	

FILENAME: BBBRBWCB-SB*BL*01.dgn
DRAWING DATE: 7/13/2012 2:50:22 PM

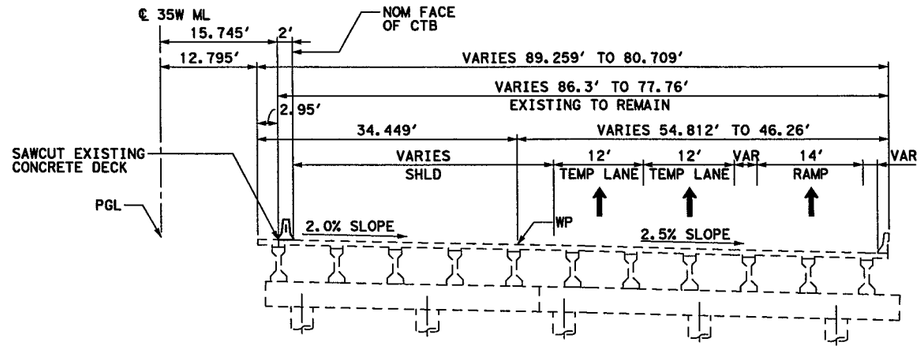

SOUTHBOUND LANE

PHASE 3A TYPICAL SECTION

SCALE: 1"= 20'-0"

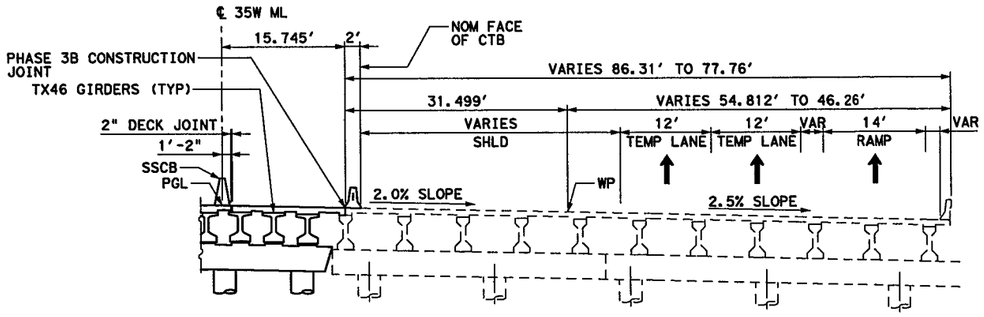

SOUTHBOUND LANE

PHASE 3B TYPICAL SECTION

SCALE: 1"= 20'-0"

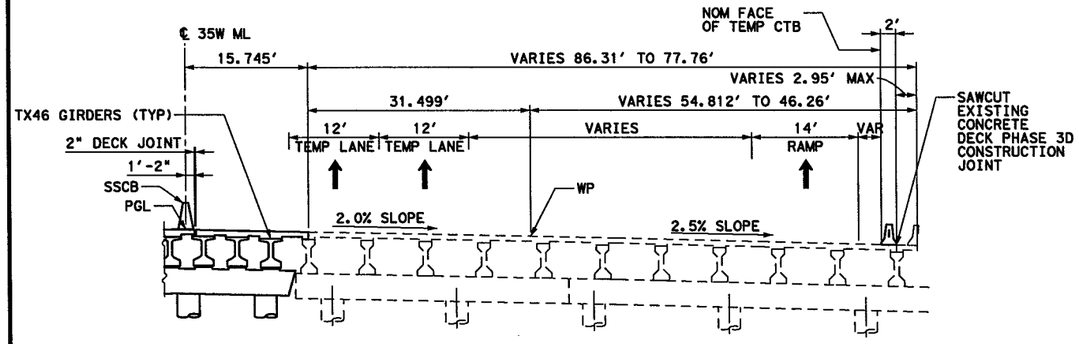

SOUTHBOUND LANE

PHASE 3C TYPICAL SECTION

SCALE: 1"= 20'-0"

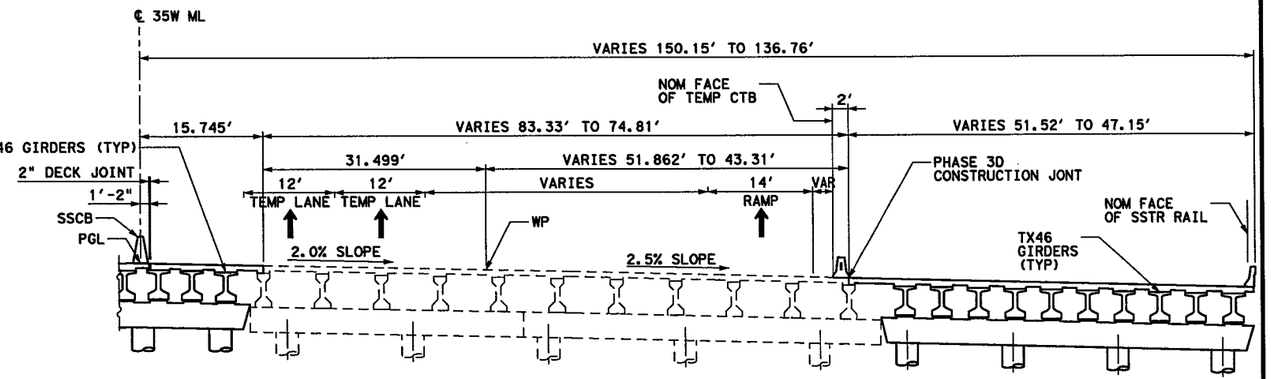

SOUTHBOUND LANE

PHASE 3D TYPICAL SECTION

SCALE: 1"= 20'-0"

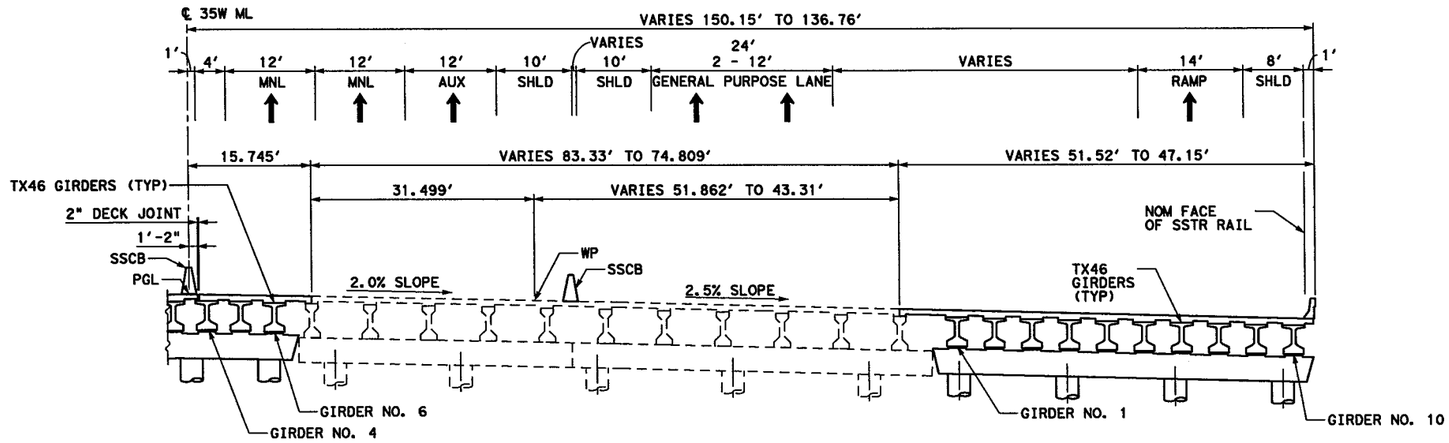

SOUTHBOUND LANE

COMPLETED TYPICAL SECTION

SCALE: 1"= 20'-0"

STATE OF TEXAS
SHANE W. EBBERT
102017
LICENSED
PROFESSIONAL ENGINEER
7/6/12

HALFF
TBPE REGISTRATION NO. F-312

Texas Department of Transportation
© 2012

IH 35W FROM NORTH TARRANT PKWY TO IH 820

PHASING DETAILS

SB IH35W G.P., M.L. & ENT. R. OVER WESTERN CENTER BLVD

SCALE: 1" = 20' H & V — SHEET 1 OF 1

DESIGN	FED.RD. DIV.NO.	FEDERAL AID PROJECT NO.		HIGHWAY NO.
SWE	6	(SEE TITLE SHEET)		IH 35W
GRAPHICS	STATE	DISTRICT	COUNTY	SHEET NO.
SG	TEXAS	FTW	TARRANT	
CHECK	CONTROL	SECTION	JOB	1765
PJR	0014	16	255, ETC.	
CHECK				
PJR				

DRAWING DATE: 3:25:26 PM 7/13/2012 FILENAME: S3BBR\WCB-SB\PD\01.dgn

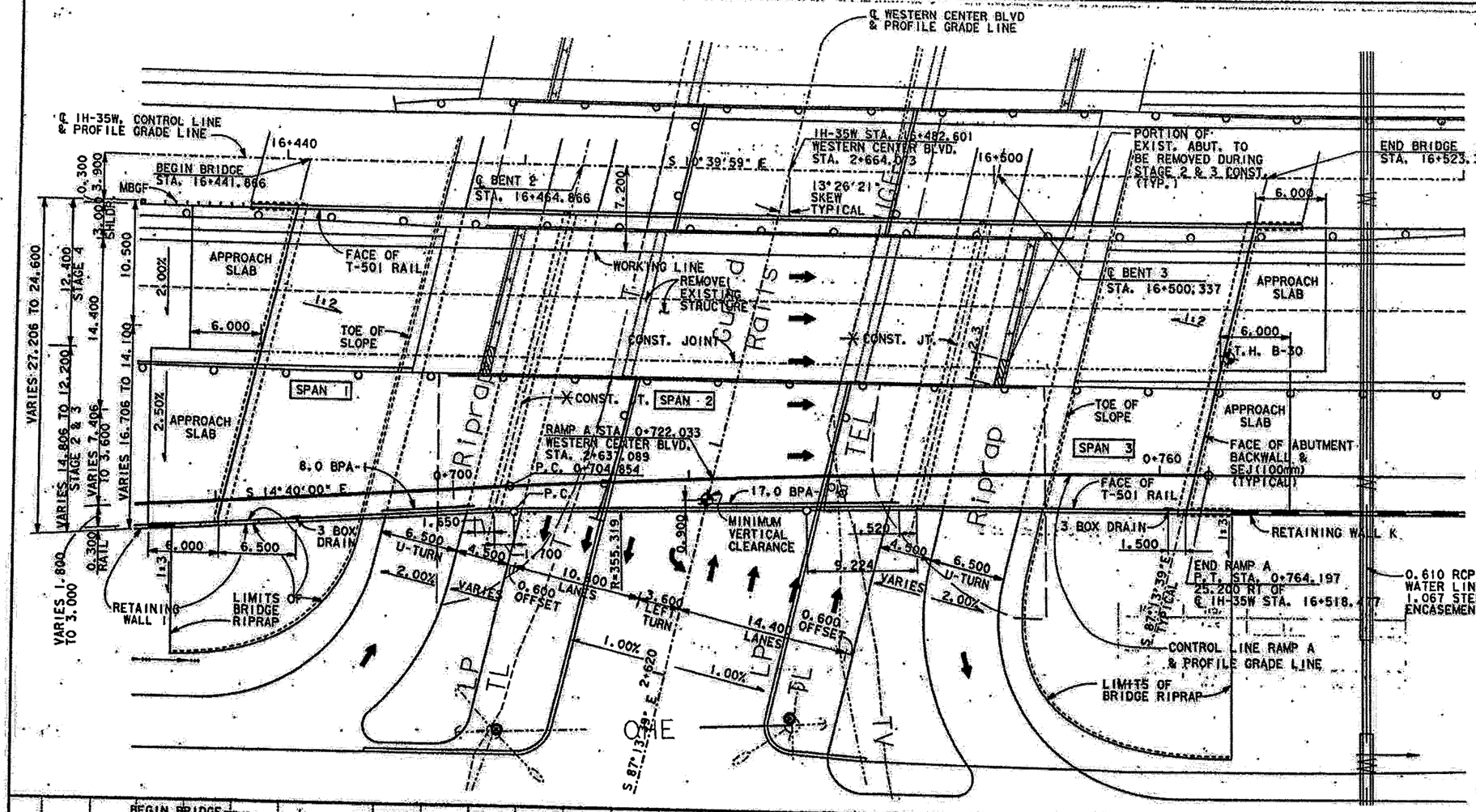

RAMP A
HORIZONTAL CURVE DATA
P.I. = 0+734.537
Δ = 4°00'00" RT.
L = 59.343
R = 850.000
T = 29.684

SCALE IN METERS
0 2 5 10m
SCALE: 1:200

IH-35W
VERTICAL CURVE DATA
P.I. = 16+480.000
ELEV. = 194.361
+1.776% -2.200%
V.C. = 320.000
M = -1.590

WESTERN CENTER BLVD.
VERTICAL CURVE DATA
NO VERTICAL CURVE
P.I. = 2+620.000
ELEV. = 185.500
-0.500%

TEST HOLE LEGEND
- CONCRETE
- ASPHALT
- FILL
- CLAY
- SHALE
- LIMESTONE
- LIMESTONE WITH CLAY
- LIMESTONE WITH SHALE

BEAM END TREATMENT REQUIRED AT INTERIOR BENTS (SEE "MISC. BRIDGE DETAILS" STANDARD SHT.)

DESIGN SPEED = 110 KM/H
REPLACEMENT BRIDGE
NBI = 02-220-0-0014-16-457
PSN = 0014-16-457

STATE OF TEXAS
DANIEL J.C. COPPS III
64481
LICENSED PROFESSIONAL ENGINEER
The seal appearing on this document was authorized by Daniel J.C. Copps III, P.E. 64481, on August 8, 1997

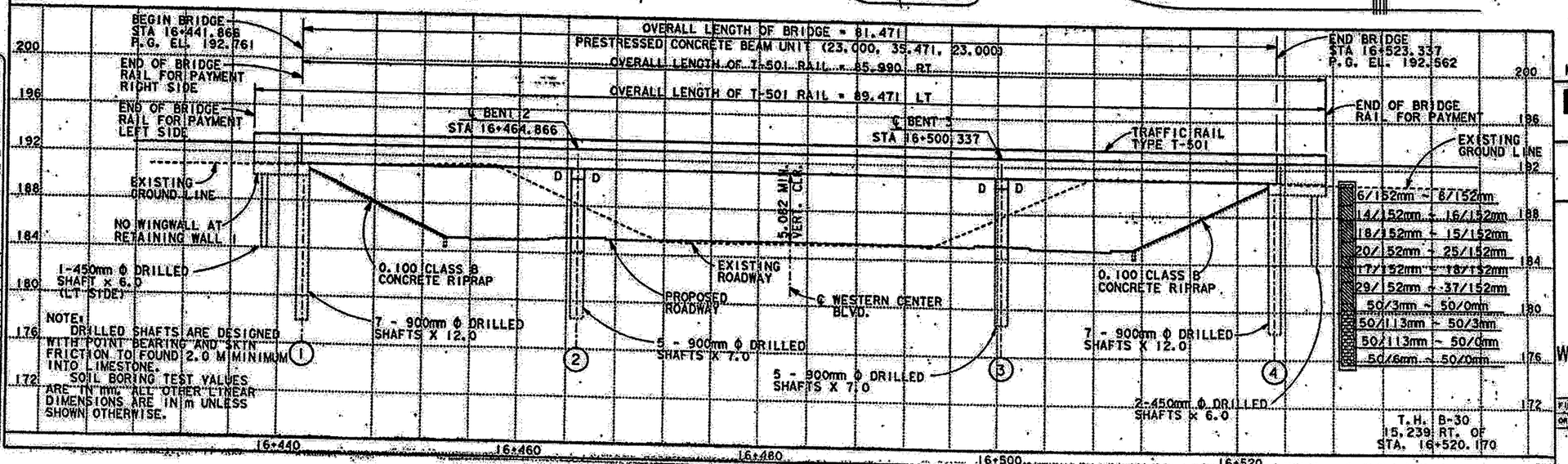

LEVELS DISPLAYED
ACC:

MS18 LOADING SHEET 1 OF 2

Brown & Root, Inc.
Houston, Texas

Turner Collie & Braden Inc.
ENGINEERS PLANNERS PROJECT MANAGERS

Texas Department of Transportation
Design Division (Bridge)

For Contractors Information Only

BRIDGE LAYOUT

WESTERN CENTER BLVD. OVERPASS SOUTHBOUND MAINLANES

FILE: 072L0A03.DGN	DW: TCB	CK: BR	DW: TCB	CK: BR
ORIG DATE:	DIST	FED. REG.	FEDERAL AID PROJECT #	SHEET
REVISIONS	02	6	DPI 2101(001)	1766
	COUNTY		CONTROL	SECT	JOB	HIGHWAY
	TARRANT		0014	16	211	IH-35W

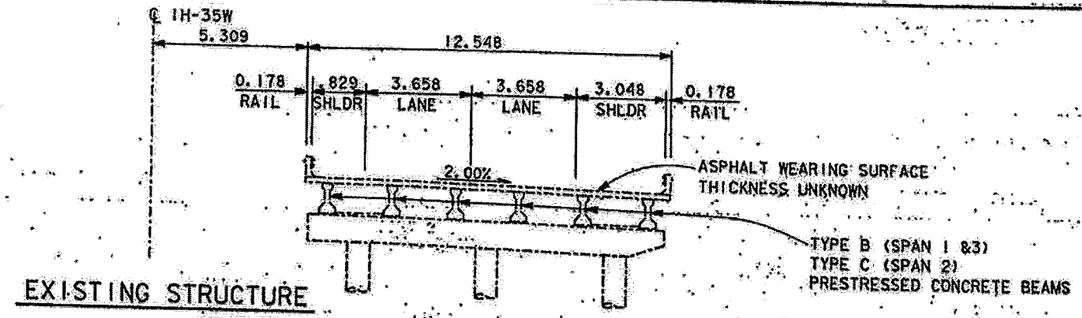

EXISTING STRUCTURE

STAGE 1 INVOLVES NO BRIDGE CONSTRUCTION, TRAFFIC LOCATION SHIFTS FROM EXISTING LOCATION TO ACCOMMODATE REPLACEMENT OF ASPHALT ROADWAY INSIDE SHOULDER. SEE ROADWAY CONSTRUCTION STAGING DRAWINGS.

STAGE 1

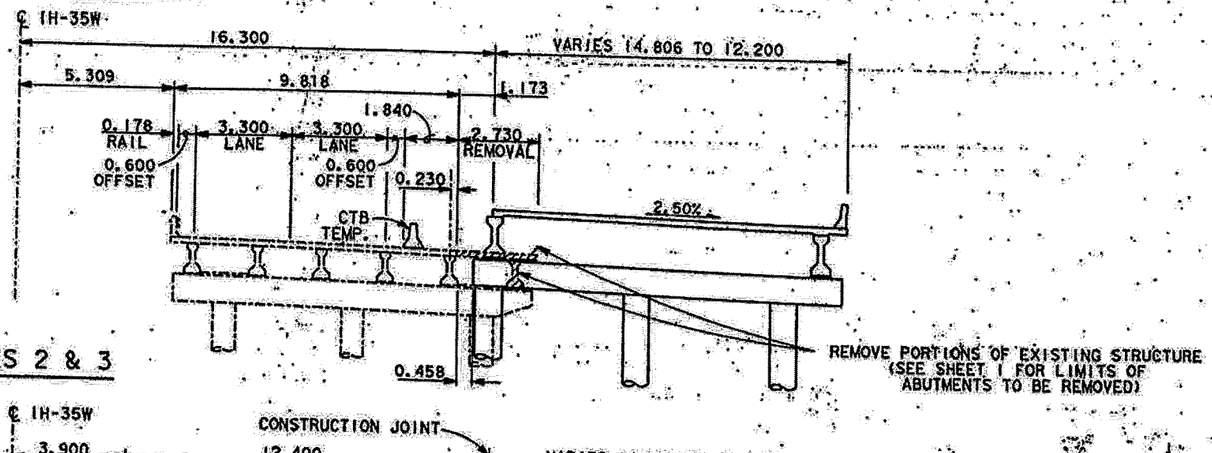

STAGES 2 & 3

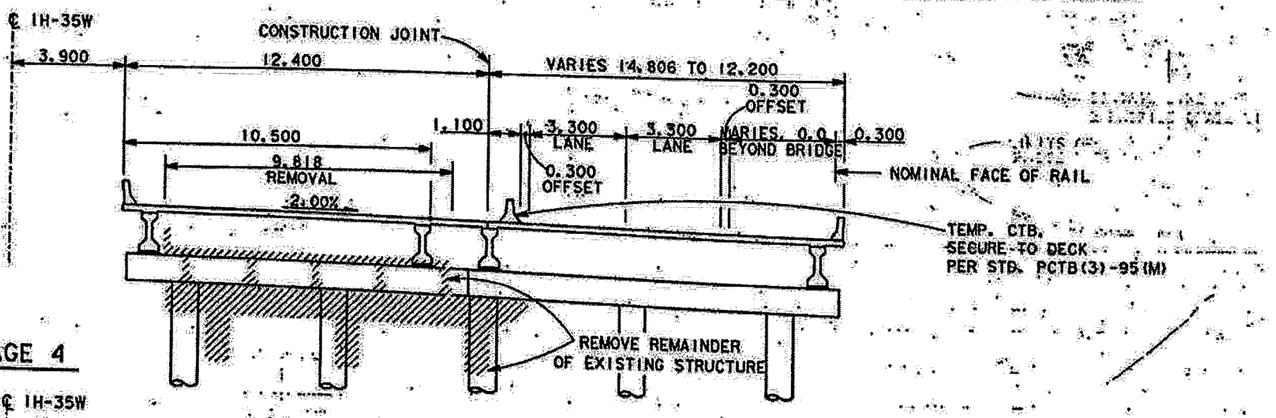

STAGE 4

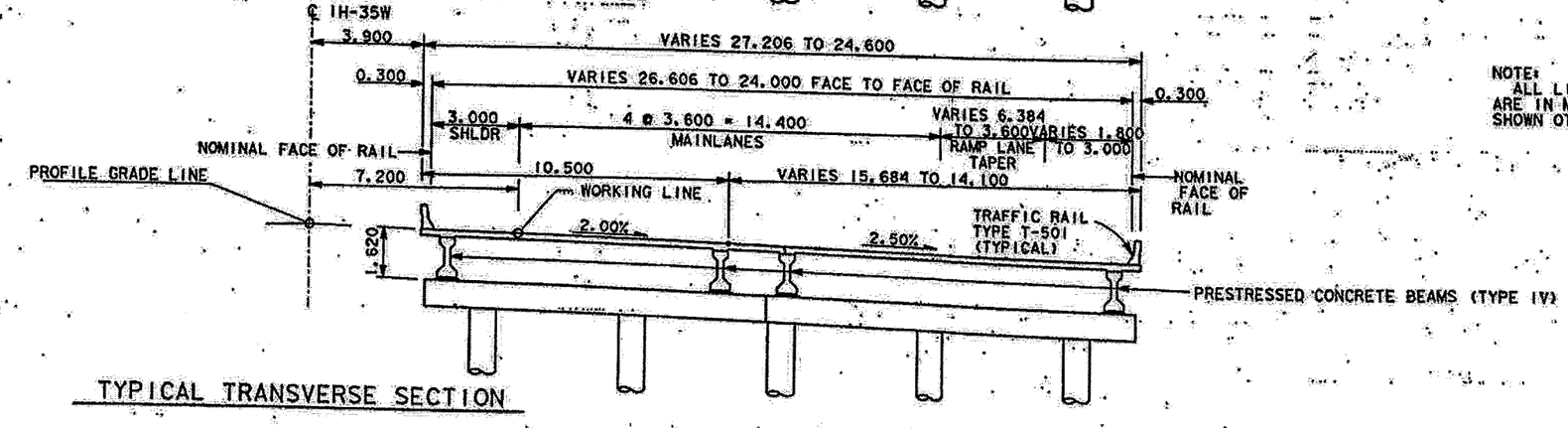

TYPICAL TRANSVERSE SECTION

NOTE:
ALL LINEAR DIMENSIONS ARE IN METERS UNLESS SHOWN OTHERWISE.

SCALE IN METERS
0 .1 2 4 .6m
SCALE: 1:100

LEVELS DISPLAYED
1 2 3 4 5 6 7 8 9 10 11 12 13 14 15 16 17 18 19 20 21 22 23 24 25 26 27 28 29 30 31 32 33 34 35 36 37 38 39 40 41 42 43 44 45 46 47 48 49 50 51 52 53 54 55 56 57 58 59 60 61 62 63 ACC

STATE OF TEXAS
DANIEL J.C. COPPS III
64481
LICENSED PROFESSIONAL ENGINEER
The seal appearing on this document was authorized by Daniel J.C. Copps III, P.E. 64481, on August 6, 1997

MSI8 LOADING SHEET 2 OF 2

Brown & Root, Inc.
Houston, Texas

Turner Collie & Braden Inc.
ENGINEERS PLANNERS PROJECT MANAGERS

Texas Department of Transportation
Design Division (Bridge)

For Contractors Information Only

BRIDGE LAYOUT

WESTERN CENTER BLVD OVERPASS
SOUTHBOUND MAINLANES

FILE: D12LOA04.DGN	DN: TCB	CK: BR	DW: TCB	CK: BR
DATE: REVISIONS	DIST. 02	COUNTY TARRANT	FEDERAL AID PROJECT # DPZ 0101(001)	SHEET 1767
	CONTROL 0014	SECT 16	JOB 211	HIGHWAY IH-35W

108

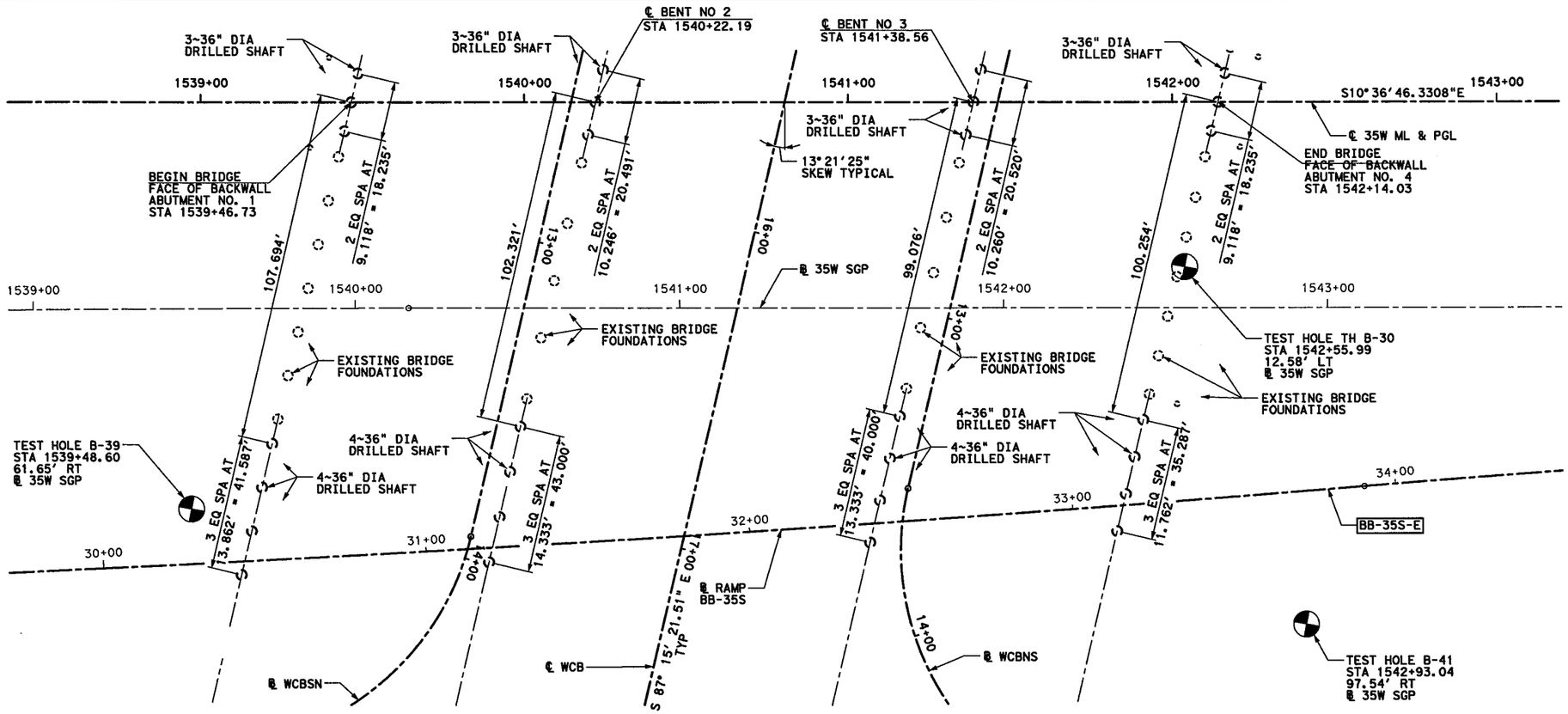

0' 10' 20' 40'

SCALE IN FEET

GENERAL NOTES:

1. FOR ANY TEMPORARY SHORING REQUIRED AT AT INTERIOR BENT LOCATIONS, FOLLOW TxDOT STANDARD SPECIFICATION ITEM 403.
2. SEE "BORING LOGS - BRIDGES" SHEETS FOR GEOTECHNICAL INFORMATION.
3. ⌀ DENOTES TEST HOLE LOCATION.
4. CONTRACTOR TO VERIFY LOCATION OF ALL UTILITIES PRIOR TO EXCAVATION.
5. FOR DRILLING LOG INFORMATION RELATED TO TH B-__ REFERENCE DESIGN PLANS FOR CSJ 0041-16-211 DATED FEB 1995.

STATE OF TEXAS
SHANE W. EBBERT
102017
LICENSED PROFESSIONAL ENGINEER
7/6/12

HS 20 LOADING (EXISTING)
HL 93 LOADING (WIDENING)

HALFF
TBPE REGISTRATION NO. F-312

Texas Department of Transportation

© 2012

IH 35W FROM NORTH TARRANT PKWY TO IH 820

FOUNDATION LAYOUT

SB IH35W G.P., M.L., & ENT. R. OVER WESTERN CENTER BLVD

SCALE: 1" = 40' H & V — SHEET 1 OF 1

DESIGN	FED.RD. DIV.NO.	FEDERAL AID PROJECT NO.		HIGHWAY NO.
SWE	6	(SEE TITLE SHEET)		IH 35W
GRAPHICS	STATE	DISTRICT	COUNTY	SHEET NO.
SG	TEXAS	FTW	TARRANT	1768
CHECK	CONTROL	SECTION	JOB	
PJR	0014	16	255, ETC.	
CHECK				
PJR				

DRAWING DATE: 3:25:31 PM 7/13/2012 FILENAME: S3BBR*WCB-SB*FL*01.dgn

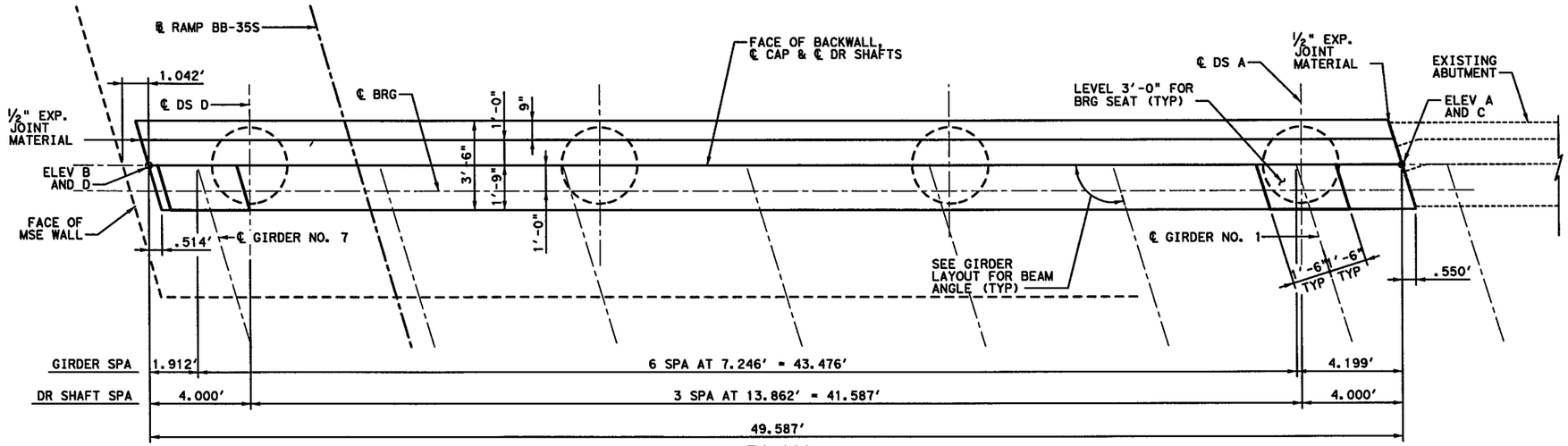

PLAN

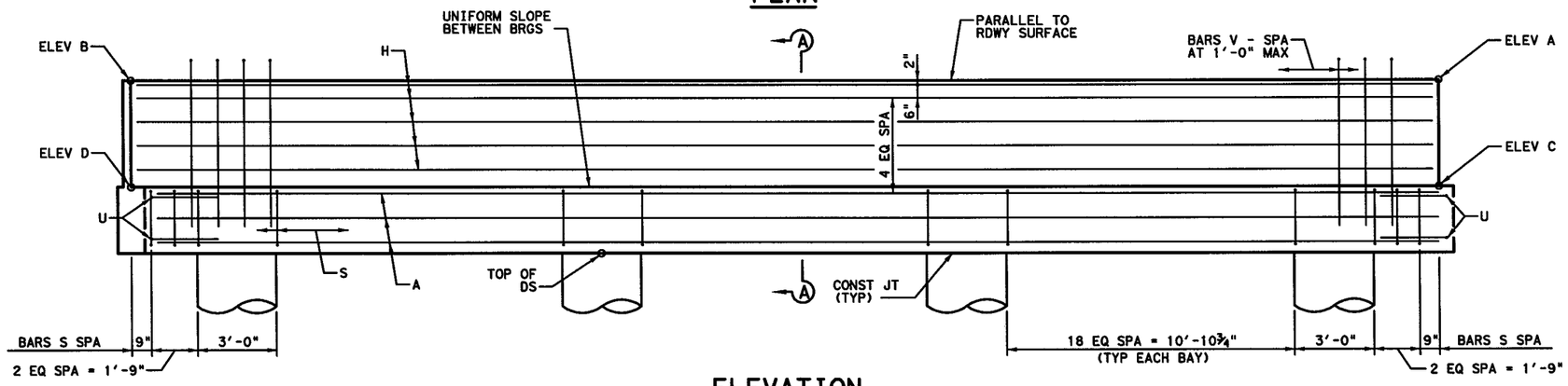

ELEVATION

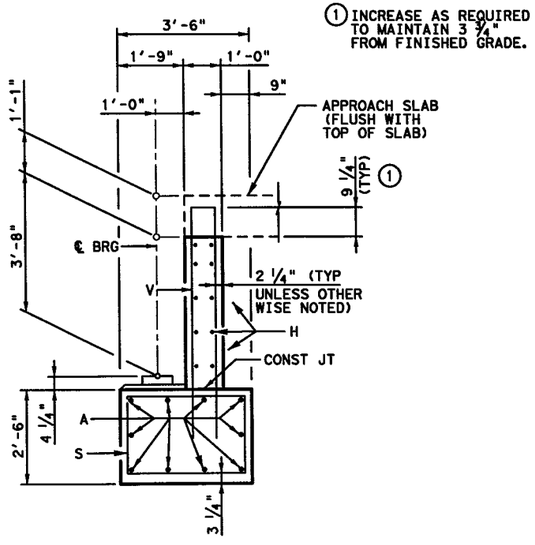

① INCREASE AS REQUIRED TO MAINTAIN 3 ¾" FROM FINISHED GRADE.

SECTION A-A

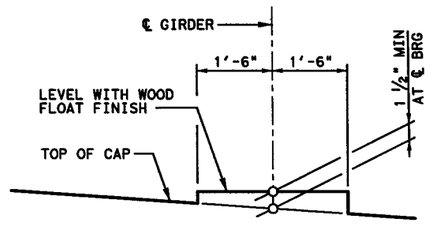

BEARING SEAT DETAIL

(BEARING SURFACE SHALL BE CLEAN AND FREE OF ALL LOOSE MATERIAL BEFORE PLACING BEARING PAD)

TABLE OF ELEVATIONS				
CAP	ELEV A	ELEV B	ELEV C	ELEV D
	628.80	627.55	624.78	623.53
TOP OF DS	DS A	DS B	DS C	DS D
	622.18	621.83	621.48	621.13
SHAFT TIP	572.18	571.83	571.48	571.13
AS-BUILT SHAFT TIP				

STATE OF TEXAS
SHANE N. EBBERT
100117
LICENSED PROFESSIONAL ENGINEER
7/6/12

HALFF
TBPE REGISTRATION NO. F-312

Texas Department of Transportation
© 2012

IH 35W FROM NORTH TARRANT PKWY TO IH 820

ABUTMENT 1 DETAILS

SB IH35W G.P. & ENT. R. OVER WESTERN CENTER BLVD

SCALE: NTS — SHEET 1 OF 2

DESIGN	FED. RD. DIV. NO.	FEDERAL AID PROJECT NO.		HIGHWAY NO.
SWE	6	(SEE TITLE SHEET)		IH 35W
GRAPHICS	STATE	DISTRICT	COUNTY	SHEET NO.
SG	TEXAS	FTW	TARRANT	
CHECK	CONTROL	SECTION	JOB	1769
PJR	0014	16	255, ETC.	
CHECK				
PJR				

DRAWING DATE: 3:25:42 PM 7/13/2012 FILENAME: S38BR*WCB-SB*AB*01.dgn

TABLE OF ESTIMATED QUANTITIES

BAR	NO.	SIZE	LENGTH	WEIGHT
A	10	#11	48'-6"	2,577
H	10	# 6	49'-0"	736
S	63	# 5	11'-4"	745
U	4	# 6	8'-2"	49
V	50	# 5	12'-9"	665
REINFORCING STEEL			LB	4,772
CL "C" CONC (HPC) (ABUT)			CY	23.4

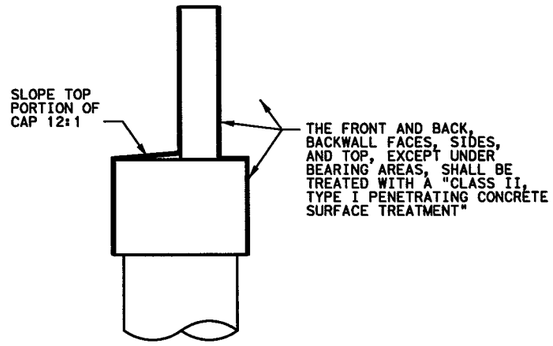

CONCRETE SURFACE TREATMENT DETAIL

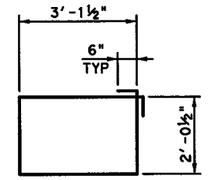

BARS S

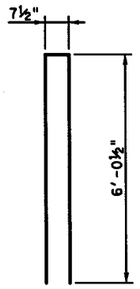

BARS V

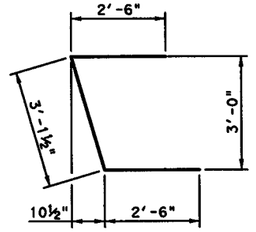

BARS U

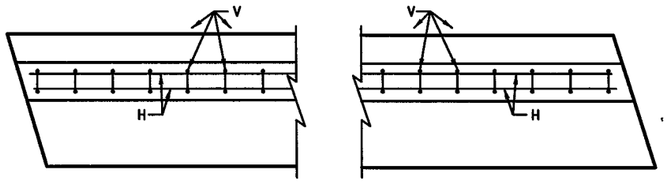

BACKWALL

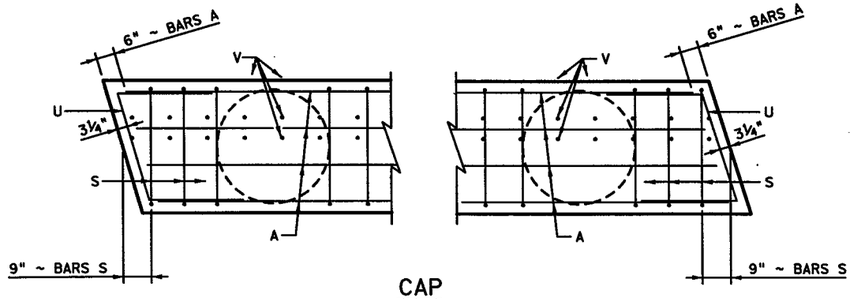

CAP

CORNER DETAILS

GENERAL NOTES:

1. DESIGNED ACCORDING TO AASHTO LRFD BRIDGE DESIGN SPECIFICATIONS, 5TH EDITION (2010).
2. CLASS "C" (HPC) CONCRETE STRENGTH F'C = 3,600 PSI.
3. ALL CAP AND WALL REINFORCING SHALL BE GRADE 60.
4. SEE FOUNDATION DETAIL SHEET, FD, FOR ALL FOUNDATION DETAILS AND NOTES.
5. CALCULATED FOUNDATION LOADS:
   CAP OR SHAFT = 120 TONS/DR SHAFT
6. SEE CONCRETE RIPRAP STANDARD SHEET, CRR, FOR RIPRAP ATTACHMENT DETAILS, IF APPLICABLE.

STATE OF TEXAS
SHANE W. EBBERT
102017
LICENSED PROFESSIONAL ENGINEER
7/6/12

HALFF
TBPE REGISTRATION NO. F-312

Texas Department of Transportation
© 2012

IH 35W FROM NORTH TARRANT PKWY TO IH 820

ABUTMENT 1 DETAILS

SB IH35W G.P. & ENT. R. OVER WESTERN CENTER BLVD

SCALE: NTS — SHEET 2 OF 2

DESIGN	FED.RD. DIV.NO.	FEDERAL AID PROJECT NO.		HIGHWAY NO.
SWE	6	(SEE TITLE SHEET)		IH 35W
GRAPHICS	STATE	DISTRICT	COUNTY	SHEET NO.
SG	TEXAS	FTW	TARRANT	1770
CHECK	CONTROL	SECTION	JOB	
PJR	0014	16	255, ETC.	
CHECK				
PJR				

DRAWING DATE: 3:25:48 PM 7/13/2012 FILENAME: S3BBR#WCB-SB#AB#02.dgn

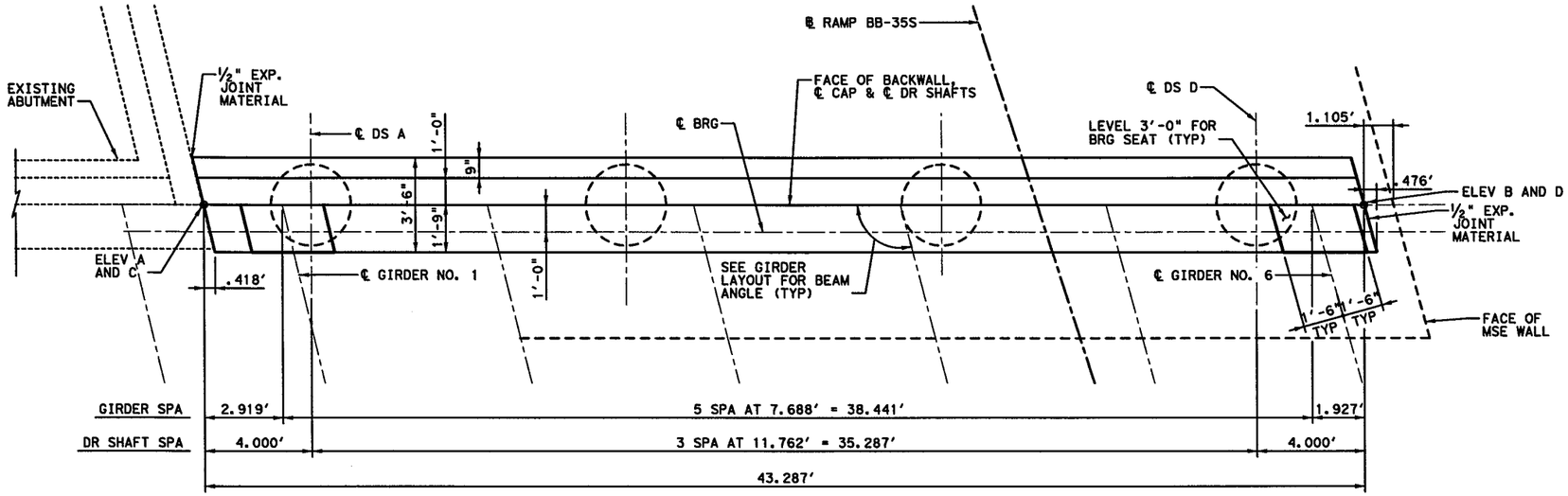

PLAN

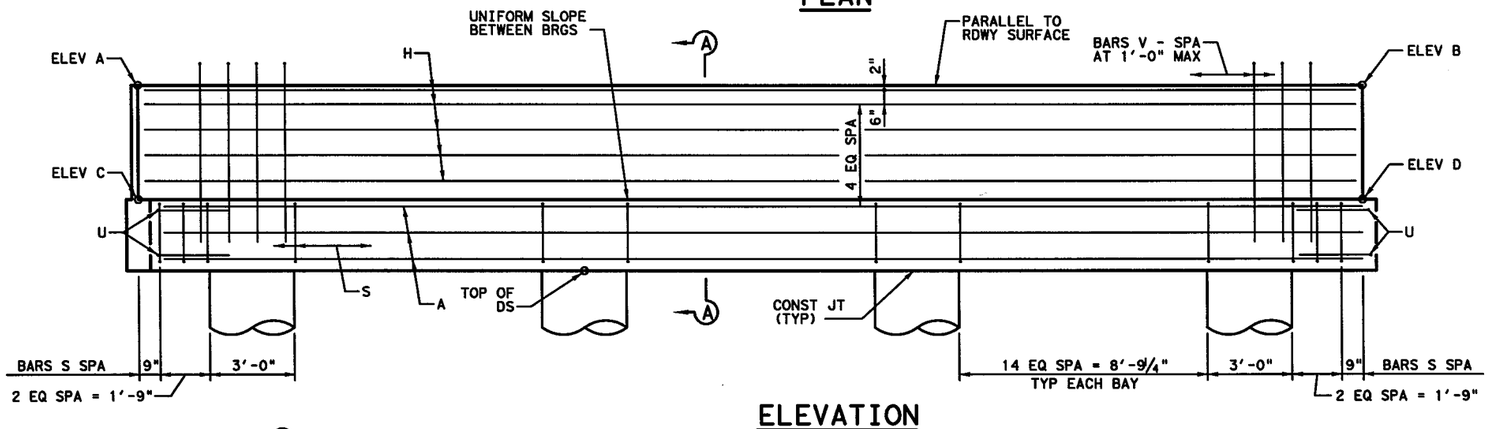

ELEVATION

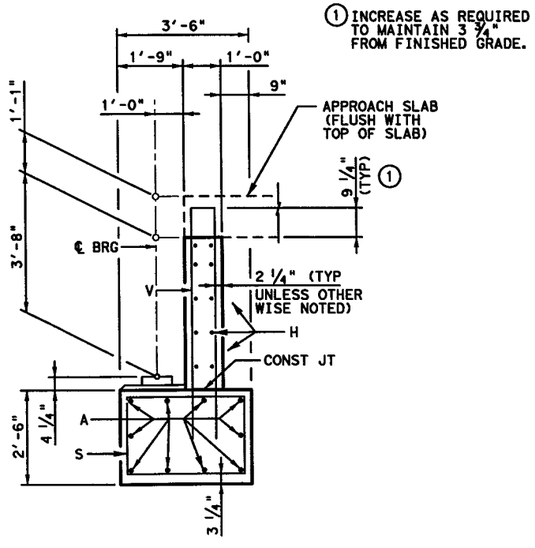

SECTION A-A

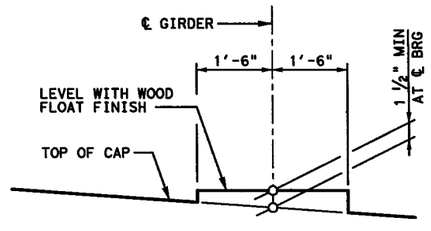

BEARING SEAT DETAIL

(BEARING SURFACE SHALL BE CLEAN AND FREE OF ALL LOOSE MATERIAL BEFORE PLACING BEARING PAD)

TABLE OF ELEVATIONS

CAP	ELEV A	ELEV B	ELEV C	ELEV D
	628.52	627.54	624.50	623.52
TOP OF DS	DS A	DS B	DS C	DS D
	621.91	621.64	621.37	621.11
SHAFT TIP	571.91	571.64	571.37	571.11
AS-BUILT SHAFT TIP				

HALFF
TBPE REGISTRATION NO. F-312

Texas Department of Transportation
© 2012

IH 35W FROM NORTH TARRANT PKWY TO IH 820

ABUTMENT 4 DETAILS

SB IH35W G.P. & ENT. R.
OVER WESTERN CENTER BLVD

SCALE: NTS — SHEET 1 OF 2

DESIGN	FED.RD. DIV.NO.	FEDERAL AID PROJECT NO.		HIGHWAY NO.
SWE	6	(SEE TITLE SHEET)		IH 35W
GRAPHICS	STATE	DISTRICT	COUNTY	SHEET NO.
SG	TEXAS	FTW	TARRANT	1771
CHECK	CONTROL	SECTION	JOB	
PJR	0014	16	255, ETC.	
CHECK				
PJR				

DRAWING DATE: 7/13/2012 3:25:59 PM FILENAME: S3BBR*WCB-SB*AB*03.dgn

TABLE OF ESTIMATED QUANTITIES				
BAR	NO.	SIZE	LENGTH	WEIGHT
A	10	#11	42'-4"	2,249
H	10	# 6	42'-10"	643
S	51	# 5	11'-4"	603
U	4	# 6	8'-1"	49
V	44	# 5	12'-9"	585
REINFORCING STEEL			LB	4,129
CL "C" CONC (HPC) (ABUT)			CY	20.5

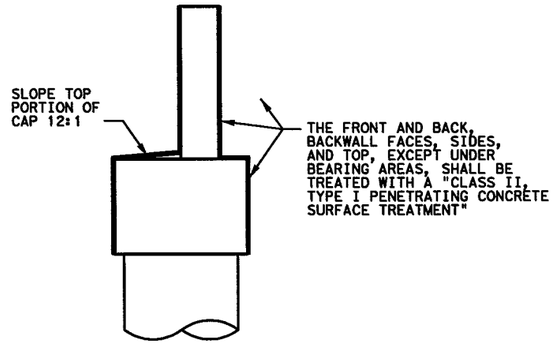

CONCRETE SURFACE TREATMENT DETAIL

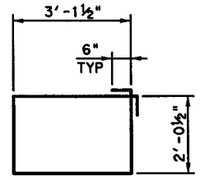

BARS S

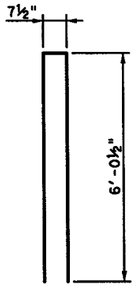

BARS V

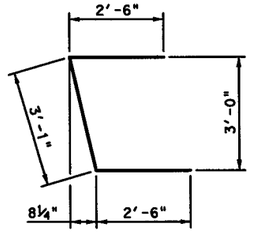

BARS U

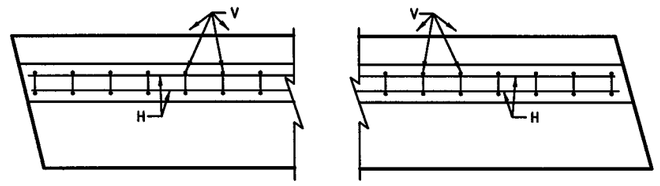

BACKWALL

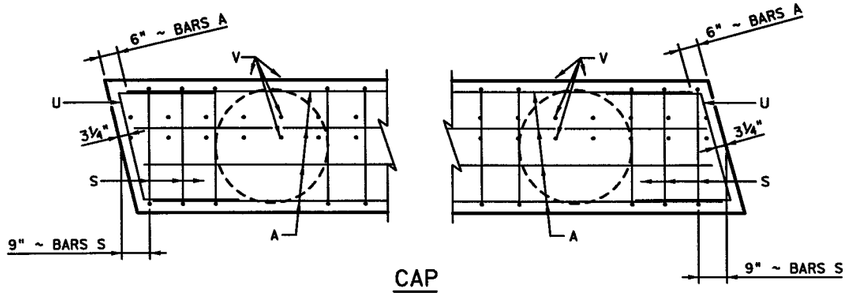

CAP

CORNER DETAILS

GENERAL NOTES:

1. DESIGNED ACCORDING TO AASHTO LRFD BRIDGE DESIGN SPECIFICATIONS, 5TH EDITION (2010).
2. CLASS "C" (HPC) CONCRETE STRENGTH F'C = 3,600 PSI.
3. ALL CAP AND WALL REINFORCING SHALL BE GRADE 60.
4. SEE FOUNDATION DETAIL SHEET, FD, FOR ALL FOUNDATION DETAILS AND NOTES.
5. CALCULATED FOUNDATION LOADS:
   CAP DR SHAFT = 109 TONS/DR SHAFT
6. SEE CONCRETE RIPRAP STANDARD SHEET, CRR, FOR RIPRAP ATTACHMENT DETAILS, IF APPLICABLE.

STATE OF TEXAS
SHANE W. EBBERT
102017
LICENSED PROFESSIONAL ENGINEER
7/6/12

HALFF
TBPE REGISTRATION NO. F-312

Texas Department of Transportation
© 2012

IH 35W FROM NORTH TARRANT PKWY TO IH 820

ABUTMENT 4 DETAILS

SB IH35W G.P. & ENT. R.
OVER WESTERN CENTER BLVD

SCALE: NTS — SHEET 2 OF 2

DESIGN	FED.RD. DIV.NO.	FEDERAL AID PROJECT NO.		HIGHWAY NO.
SWE	6	(SEE TITLE SHEET)		IH 35W
GRAPHICS	STATE	DISTRICT	COUNTY	SHEET NO.
SG	TEXAS	FTW	TARRANT	1772
CHECK	CONTROL	SECTION	JOB	
PJR	0014	16	255, ETC.	
CHECK				
PJR				

DRAWING DATE: 3:26:05 PM 7/13/2012 FILENAME: S3BBR*WCB-SB*AB*04.dgn

GENERAL NOTES:

1. DESIGNED ACCORDING TO AASHTO LRFD BRIDGE DESIGN SPECIFICATIONS, 5TH EDITION (2010).
2. CLASS "C" (HPC) CONCRETE STRENGTH F'C = 3,600 PSI.
3. ALL REINFORCING STEEL SHALL BE GRADE 60.
4. SEE FOUNDATION DETAIL SHEET, FD, FOR ALL FOUNDATION DETAILS AND NOTES.
5. CALCULATED FOUNDATION LOADS:
   BENT 2 = 238 TONS/DR SHAFT

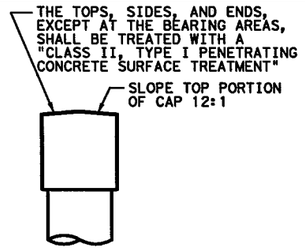

CONCRETE SURFACE TREATMENT DETAIL

TABLE OF ELEVATIONS

CAP	ELEV A	ELEV B		
	625.06	623.81		
COLUMNS	COL A	COL B	COL C	COL D
	621.46	621.11	620.76	620.41
④ TOP OF DS	DS A	DS B	DS C	DS D
	603.46	603.11	602.76	602.41
SHAFT TIP	571.46	571.11	570.76	570.41
AS-BUILT SHAFT TIP				

② TABLE OF COLUMN QUANTITIES

BENT	"H"	CLASS "C" CONC (4 COLS)	BARS V 40 ~ #9		BARS Z 4 ~ #3 SPIRAL	
NO.	FT	CY	LENGTH	WEIGHT	LENGTH	WEIGHT
2	18	18.9	20'-3"	2,755	283'-4"	427

② ADJUST BARS V LENGTH BY 1 FT AND BARS Z LENGTH BY 15.74 FT FOR EACH LINEAR FOOT OF VARIATION IN "H" VALUE.

③ ADJUST REINFORCING STEEL TOTAL BY 140 LBS AND CLASS "C" CONCRETE TOTAL BY 0.7854 CY FOR EACH LINEAR FOOT OF VARIATION IN "H" VALUE.

④ TOP OF DRILLED SHAFT ELEVATIONS WERE ESTIMATED BASED ON GROUND ELEVATION INFORMATION AVAILABLE AT THE TIME OF DESIGN. CONTRACTOR SHALL CONFIRM THESE ELEVATIONS PRIOR TO DRILLING.

③ TOTAL ESTIMATED QUANTITIES

REINF STEEL	CLASS "C" CONC
LB	CY
8,039	41.7

TABLE OF CONSTANT QUANTITIES

BAR	NO.	SIZE	LENGTH	WEIGHT
A	7	#11	50'-8"	1,884
B	6	#11	49'-2"	1,567
D	4	1 ¼"D	1'-8"	28
S	60	#5	13'-6"	845
T	10	#5	49'-2"	513
U	2	#5	9'-8"	20
REINFORCING STEEL			LB	4,857
CL "C" CONC (HPC) (BENT)			CY	22.8

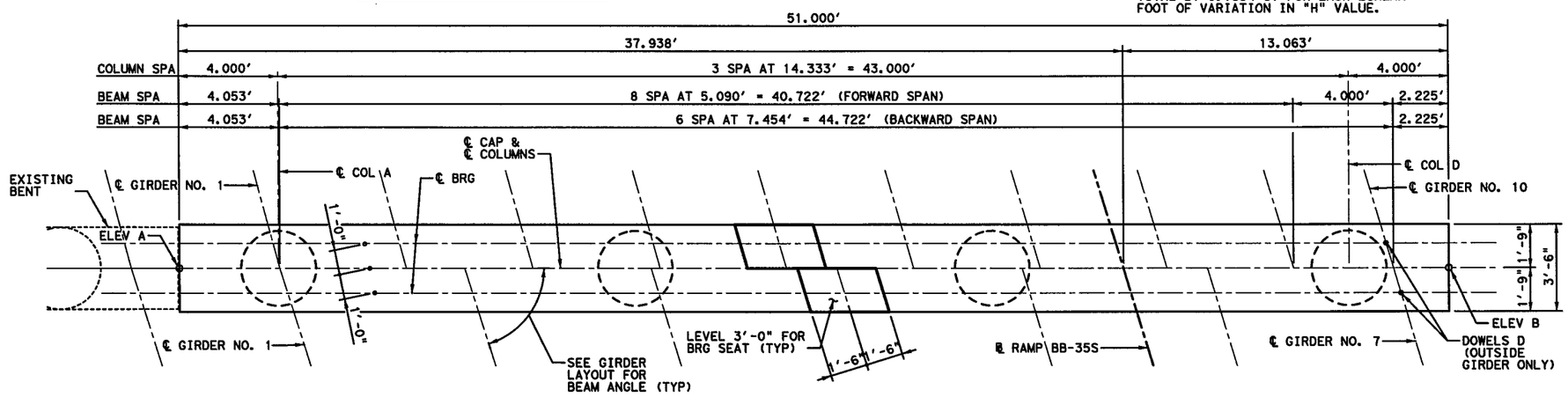

PLAN

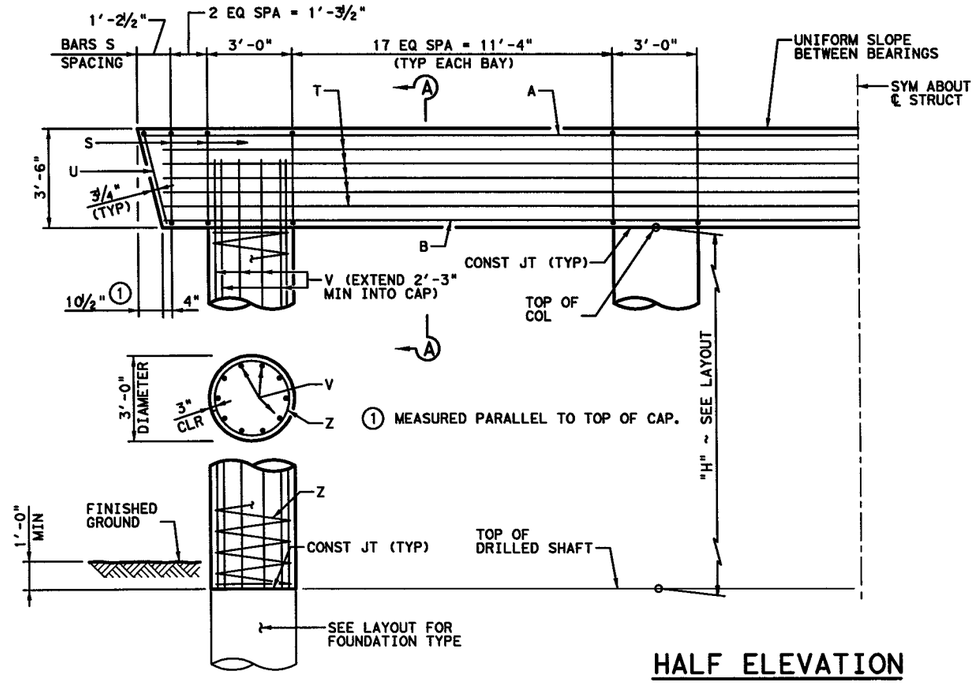

HALF ELEVATION

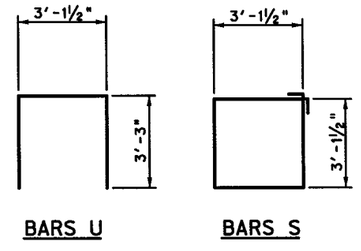

BARS U BARS S BARS Z

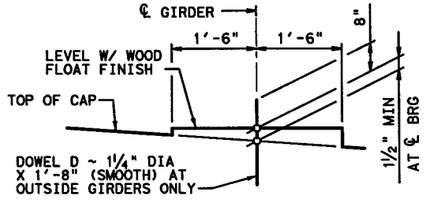

BEARING SEAT DETAIL

(BEARING SURFACE MUST BE CLEAN AND FREE OF ALL LOOSE MATERIAL BEFORE PLACING BEARING PAD.)

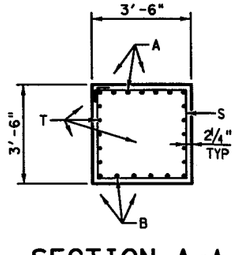

SECTION A-A

HALFF
TBPE REGISTRATION NO. F-312

Texas Department of Transportation
© 2012

IH 35W FROM NORTH TARRANT PKWY TO IH 820

INTERIOR BENT NO. 2

SB IH35W G.P. & ENT. R.
OVER WESTERN CENTER BLVD

SCALE: NTS — SHEET 1 OF 1

DESIGN	FED. RD. DIV. NO.	FEDERAL AID PROJECT NO.		HIGHWAY NO.
SWE	6	(SEE TITLE SHEET)		IH 35W
GRAPHICS SG	STATE	DISTRICT	COUNTY	SHEET NO.
CHECK PJR	TEXAS	FTW	TARRANT	1773
CHECK PJR	CONTROL	SECTION	JOB	
	0014	16	255, ETC.	

DRAWING DATE: 3:26:18 PM 7/13/2012 FILENAME: S3BBR*WCB-SB*IB*01.dgn

GENERAL NOTES:

1. DESIGNED ACCORDING TO AASHTO LRFD BRIDGE DESIGN SPECIFICATIONS, 5TH EDITION (2010).
2. CLASS "C" (HPC) CONCRETE STRENGTH F'C = 3,600 PSI.
3. ALL REINFORCING STEEL SHALL BE GRADE 60.
4. SEE FOUNDATION DETAIL SHEET, FD, FOR ALL FOUNDATION DETAILS AND NOTES.
5. CALCULATED FOUNDATION LOADS:
   BENT 3 = 230 TONS/DR SHAFT

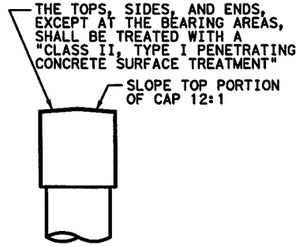

CONCRETE SURFACE TREATMENT DETAIL

TABLE OF ELEVATIONS

CAP	ELEV A	ELEV B		
	624.94	623.81		
COLUMNS	COL A	COL B	COL C	COL D
	621.35	621.03	620.72	620.41
④ TOP OF DS	DS A	DS B	DS C	DS D
	603.35	603.03	602.72	602.41
SHAFT TIP	571.35	571.03	570.72	570.41
AS-BUILT SHAFT TIP				

② TABLE OF COLUMN QUANTITIES

BENT	"H"	CLASS "C" CONC (4 COLS)	BARS V 40 ~ #9		BARS Z 4 ~ #3 SPIRAL	
NO.	FT	CY	LENGTH	WEIGHT	LENGTH	WEIGHT
3	18	18.9	20'-3"	2,755	283'-4"	427

② ADJUST BARS V LENGTH BY 1 FT AND BARS Z LENGTH BY 15.74 FT FOR EACH LINEAR FOOT OF VARIATION IN "H" VALUE.

③ ADJUST REINFORCING STEEL TOTAL BY 140 LBS AND CLASS "C" CONCRETE TOTAL BY 0.7854 CY FOR EACH LINEAR FOOT OF VARIATION IN "H" VALUE.

③ TOTAL ESTIMATED QUANTITIES

REINF STEEL	CLASS "C" CONC
LB	CY
7,514	40.3

④ TOP OF DRILLED SHAFT ELEVATIONS WERE ESTIMATED BASED ON GROUND ELEVATION INFORMATION AVAILABLE AT THE TIME OF DESIGN. CONTRACTOR SHALL CONFIRM THESE ELEVATIONS PRIOR TO DRILLING.

TABLE OF CONSTANT QUANTITIES

BAR	NO.	SIZE	LENGTH	WEIGHT
A	7	#11	47'-8"	1,773
B	5	#11	46'-2"	1,226
D	4	1 1/4"D	1'-8"	28
S	57	#5	13'-6"	803
T	10	#5	46'-2"	482
U	2	#5	9'-8"	20
REINFORCING STEEL			LB	4,332
CL "C" CONC (HPC) (BENT)			CY	21.4

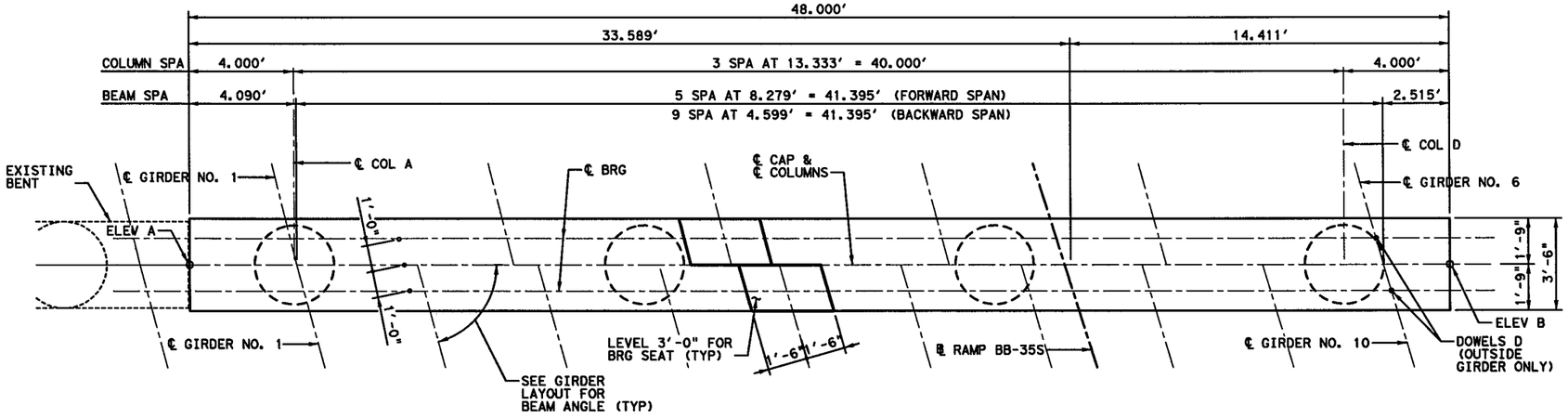

PLAN

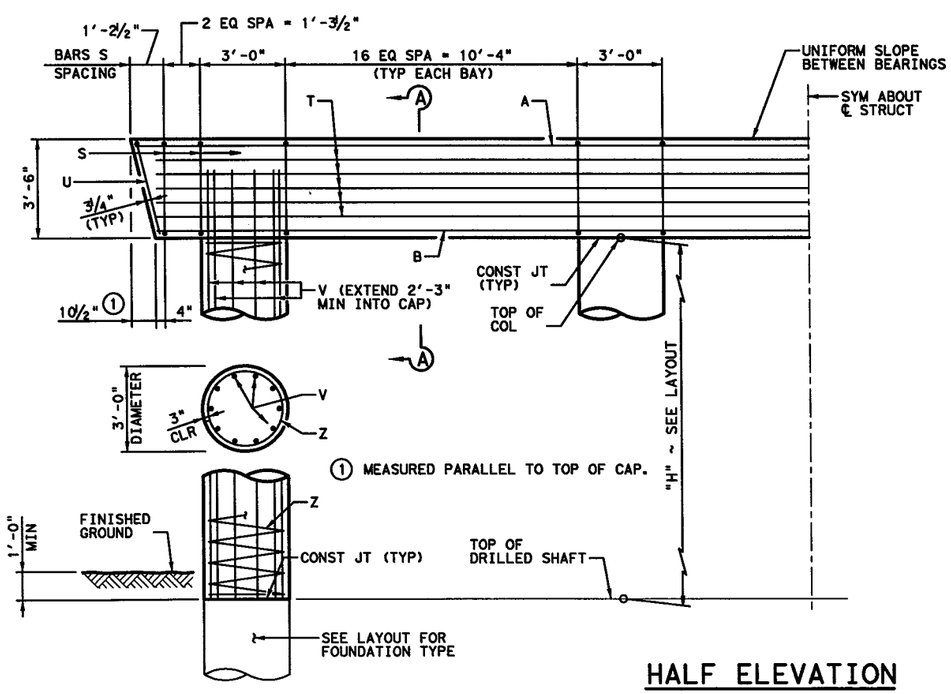

HALF ELEVATION

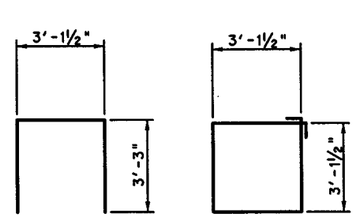

BARS U BARS S BARS Z

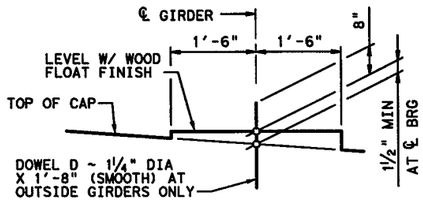

BEARING SEAT DETAIL

(BEARING SURFACE MUST BE CLEAN AND FREE OF ALL LOOSE MATERIAL BEFORE PLACING BEARING PAD.)

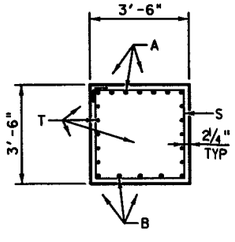

SECTION A-A

STATE OF TEXAS
SHANE W. EBBERT
102017
LICENSED PROFESSIONAL ENGINEER
7/6/12

HALFF
TBPE REGISTRATION NO. F-312

Texas Department of Transportation
© 2012

IH 35W FROM NORTH TARRANT PKWY TO IH 820

INTERIOR BENT NO. 3

SB IH35W G.P. & ENT. R. OVER WESTERN CENTER BLVD

SCALE: NTS SHEET 1 OF 1

DESIGN	FED.RD. DIV.NO.	FEDERAL AID PROJECT NO.		HIGHWAY NO.
SWE	6	(SEE TITLE SHEET)		IH 35W
GRAPHICS SG	STATE	DISTRICT	COUNTY	SHEET NO.
CHECK PJR	TEXAS	FTW	TARRANT	1774
CHECK PJR	CONTROL	SECTION	JOB	
	0014	16	255, ETC.	

DRAWING DATE: 3:26:25 PM 7/13/2012 FILENAME: S3BBR*WCB-SB*IB*02.dgn

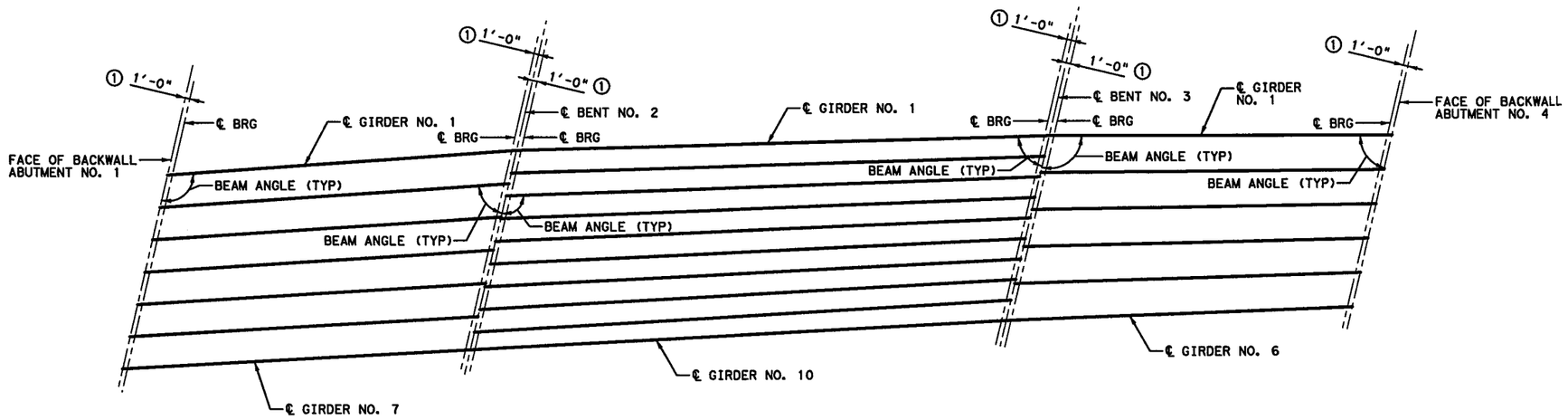

SPAN 1
(TX46 GIRDERS)

SPAN 2
(TX46 GIRDERS)

SPAN 3
(TX46 GIRDERS)

① SEE IGEB STANDARD FOR ORIENTATION OF DIMENSION.

② GIRDER LENGTHS SHOWN ARE BOTTOM GIRDER FLANGE LENGTHS WITH ADJUSTMENTS MADE FOR BEAM SLOPE.

BENT REPORT

ABUT NO. 1 (S87°10'26.23"E)
DISTANCE BETWEEN STATION LINE AND BEAM 1 104.95' L

			BEAM SPAC. (C.L. BENT)	BEAM ANGLE D	M	S
SPAN 1	BEAM	1	0.000	107	26	21
	BEAM	2	7.246	107	17	30
	BEAM	3	7.246	107	8	37
	BEAM	4	7.246	106	59	44
	BEAM	5	7.246	106	50	50
	BEAM	6	7.246	106	41	55
	BEAM	7	7.246	106	33	0
	TOTAL		43.476			

BENT NO. 2 (S87°10'26.33"E)
DISTANCE BETWEEN STATION LINE AND BEAM 1 99.6' L

			BEAM SPAC. (C.L. BENT)	BEAM ANGLE D	M	S
SPAN 1	BEAM	1	0.000	72	33	39
	BEAM	2	7.454	72	42	31
	BEAM	3	7.454	72	51	23
	BEAM	4	7.454	73	0	16
	BEAM	5	7.454	73	9	10
	BEAM	6	7.454	73	18	5
	BEAM	7	7.454	73	27	0
	TOTAL		44.722			
SPAN 2	BEAM	1	0.000	104	57	42
	BEAM	2	5.090	105	11	38
	BEAM	3	5.090	105	25	30
	BEAM	4	5.090	105	39	19
	BEAM	5	5.090	105	53	7
	BEAM	6	5.090	106	6	53
	BEAM	7	5.090	106	20	37
	BEAM	8	5.090	106	34	20
	BEAM	9	5.090	106	48	0
	BEAM	10	4.000	106	31	17
	TOTAL		44.722			

BENT NO. 3 (S87°10'26.33"E)
DISTANCE BETWEEN STATION LINE AND BEAM 1 96.41' L

			BEAM SPAC. (C.L. BENT)	BEAM ANGLE D	M	S
SPAN 2	BEAM	1	0.000	75	2	18
	BEAM	2	4.599	74	48	22
	BEAM	3	4.599	74	34	30
	BEAM	4	4.599	74	20	41
	BEAM	5	4.599	74	6	53
	BEAM	6	4.599	73	53	7
	BEAM	7	4.599	73	39	23
	BEAM	8	4.599	73	25	40
	BEAM	9	4.599	73	12	0
	BEAM	10	4.599	73	28	43
	TOTAL		41.395			
SPAN 3	BEAM	1	0.000	103	26	20
	BEAM	2	8.279	103	52	28
	BEAM	3	8.279	104	18	30
	BEAM	4	8.279	104	44	26
	BEAM	5	8.279	105	10	16
	BEAM	6	8.279	105	36	00
	TOTAL		41.395			

ABUTMENT NO. 4 (S87°10'26.33"E)
DISTANCE BETWEEN STATION LINE AND BEAM 1 96.41' L

			BEAM SPAC. (C.L. BENT)	BEAM ANGLE D	M	S
SPAN 3	BEAM	1	0.000	76	33	40
	BEAM	2	7.688	76	7	32
	BEAM	3	7.688	75	41	30
	BEAM	4	7.688	75	15	34
	BEAM	5	7.688	74	49	44
	BEAM	6	7.688	74	24	0
	TOTAL		38.441			

BEAM REPORT

BEAM REPORT, SPAN 1

		HORIZONTAL DISTANCE C-C BENT	C-C BRG.	TRUE DISTANCE BOT. BM. FLG. ②	BEAM SLOPE
BEAM	1	76.933	74.851	76.41	0.0038
BEAM	2	76.871	74.776	76.35	0.0038
BEAM	3	76.809	74.716	76.28	0.0038
BEAM	4	76.749	74.657	76.22	0.0038
BEAM	5	76.688	74.598	76.16	0.0038
BEAM	6	76.628	74.540	76.10	0.0038
BEAM	7	76.569	74.482	76.04	0.0038

BEAM REPORT, SPAN 2

		HORIZONTAL DISTANCE C-C BENT	C-C BRG.	TRUE DISTANCE BOT. BM. FLG. ②	BEAM SLOPE
BEAM	1	117.156	115.086	116.65	-0.0010
BEAM	2	117.284	115.212	116.77	-0.0009
BEAM	3	117.414	115.339	116.90	-0.0007
BEAM	4	117.545	115.468	117.04	-0.0006
BEAM	5	117.679	115.599	117.17	-0.0005
BEAM	6	117.814	115.732	117.30	-0.0003
BEAM	7	117.951	115.867	117.44	-0.0002
BEAM	8	118.090	116.003	117.58	0.0000
BEAM	9	118.231	116.142	117.72	0.0001
BEAM	10	118.059	115.973	117.55	0.0000

BEAM REPORT, SPAN 3

		HORIZONTAL DISTANCE C-C BENT	C-C BRG.	TRUE DISTANCE BOT. BM. FLG. ②	BEAM SLOPE
BEAM	1	75.472	73.416	74.95	-0.0054
BEAM	2	75.612	73.552	75.10	-0.0052
BEAM	3	75.756	73.692	75.25	-0.0049
BEAM	4	76.904	73.836	75.39	-0.0047
BEAM	5	76.056	73.984	75.55	-0.0044
BEAM	6	76.213	74.137	75.70	-0.0041

STATE OF TEXAS
SHANE W. ERBERT
102017
LICENSED
PROFESSIONAL ENGINEER
7/6/12

HALFF®
TBPE REGISTRATION NO. F-312

Texas Department of Transportation
© 2012

IH 35W FROM NORTH TARRANT PKWY TO IH 820

GIRDER LAYOUT

SB IH35W G.P. & ENT. R.
OVER WESTERN CENTER BLVD

SCALE: NTS SHEET 1 OF 1

DESIGN	FED.RD. DIV.NO.	FEDERAL AID PROJECT NO.		HIGHWAY NO.
SWE	6	(SEE TITLE SHEET)		IH 35W
GRAPHICS	STATE	DISTRICT	COUNTY	SHEET NO.
SG	TEXAS	FTW	TARRANT	1775
CHECK PJR	CONTROL	SECTION	JOB	
CHECK PJR	0014	16	255, ETC.	

DRAWING DATE: 3:37:40 PM 7/13/2012 FILENAME: S3BBR*WCB-SB*GF*01.dgn

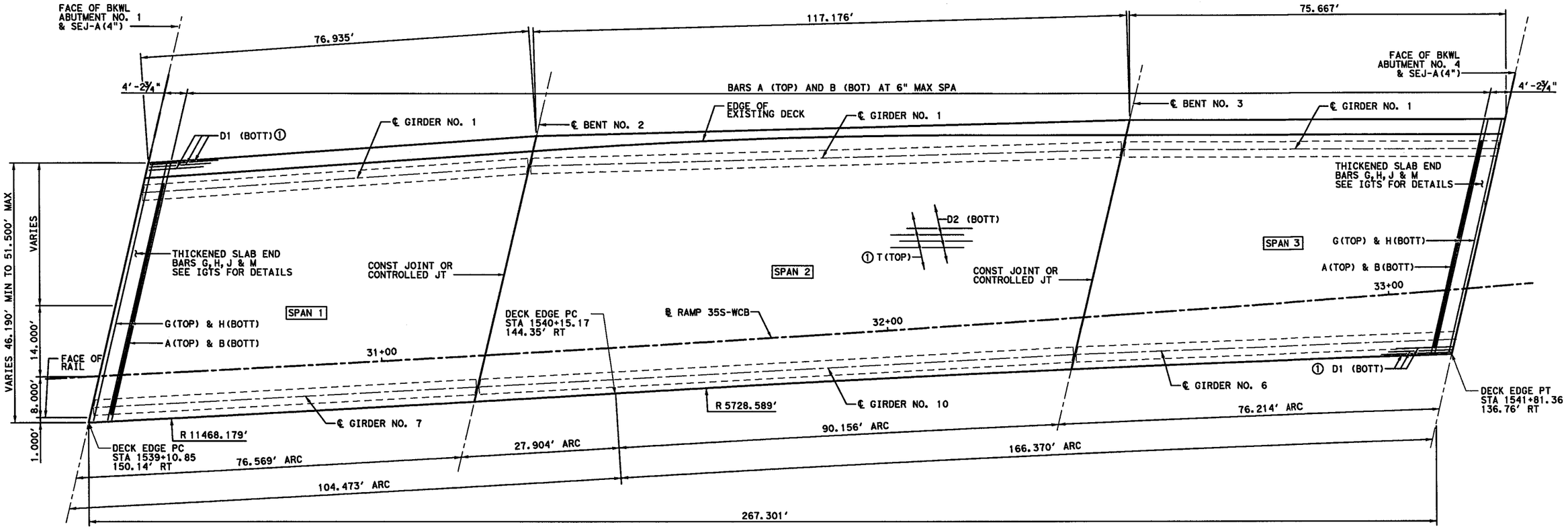

① 2" END COVER ON BARS D1 AND T.

PLAN

STATE OF TEXAS
SHANE W. EBBERT
102017
LICENSED PROFESSIONAL ENGINEER
7/6/12

HALFF
TBPE REGISTRATION NO. F-312

Texas Department of Transportation
© 2012

IH 35W FROM NORTH TARRANT PKWY TO IH 820

267.30' PRESTRESSED CONCRETE I-GIRDER UNIT

SB IH35W G.P. & ENT. R. OVER WESTERN CENTER BLVD

SCALE: NTS

SHEET 1 OF 2

DESIGN	FED. RD. DIV. NO.	FEDERAL AID PROJECT NO.		HIGHWAY NO.
SWE	6	(SEE TITLE SHEET)		IH 35W
GRAPHICS SG	STATE	DISTRICT	COUNTY	SHEET NO.
CHECK PJR	TEXAS	FTW	TARRANT	
CHECK PJR	CONTROL	SECTION	JOB	1776
	0014	16	255, ETC.	

DRAWING DATE: 3:37:53 PM 7/13/2012 FILENAME: S3BBR*WCB-SB*PB*01.DGN

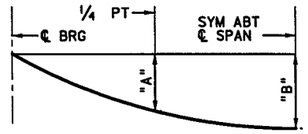

DEAD LOAD DEFLECTION DIAGRAM

CALCULATED DEFLECTIONS SHOWN ARE DUE TO THE CONCRETE SLAB ON INTERIOR GIRDERS ONLY (EC = 5000 KSI). ADJUST VALUES AS REQUIRED FOR EXTERIOR GIRDERS AND IF OPTIONAL SLAB FORMING IS USED. THESE VALUES MAY REQUIRE FIELD VERIFICATION.

SPAN NO.	GIRDER NO.	"A" FT	"B" FT
1	1,7	0.032	0.044
1	2-6	0.035	0.050
2	1	0.153	0.219
2	2-4	0.144	0.202
2	5-8	0.146	0.206
2	9	0.142	0.198
2	10	0.152	0.214
3	1,6	0.032	0.044
3	2-5	0.035	0.050

TABLE OF SECTION DEPTHS

SPAN NO.	GIRDER NO.	"X" AT ℄ BRG	"Y" AT ℄ BRG	"Z" AT ℄ SPAN②
1	ALL	11"	4'-9"	10"
2	1,8,10	11"	4'-9"	9½"
2	2-7	11"	4'-9"	9¾"
2	9	11"	4'-9"	9¼"
3	ALL	11"	4'-9"	10"

② THEORETICAL DIMENSION

BAR TABLE

BAR	SIZE
A	#5
B	#5
D	#5
G	#5
H	#5
J	#5
M	#5
T	#4

TABLE OF ESTIMATED QUANTITIES

SPAN	REINF CONC SLAB	PRESTR CONC I-GIRDERS (TX46) ④	CLASS "S" CONCRETE	REINFORCING STEEL ③
NO.	SF	LF	CY	Lb
1	3,901	533.6	96.3	25,357
2	5,873	1,172.1	145.0	38,175
3	3,584	451.9	88.5	23,296
TOTAL	13,358	2,157.6	329.8	86,828

③ REINFORCING STEEL WEIGHT IS CALCULATED USING AN APPROXIMATE FACTOR OF 6.5 LBS PER SQ FT.

④ LENGTHS SHOWN ARE BOTTOM OF GIRDER FLANGE LENGTHS WITH ADJUSTMENTS MADE FOR BEAM SLOPE. SEE GIRDER LAYOUT FOR GIRDER LENGTHS.

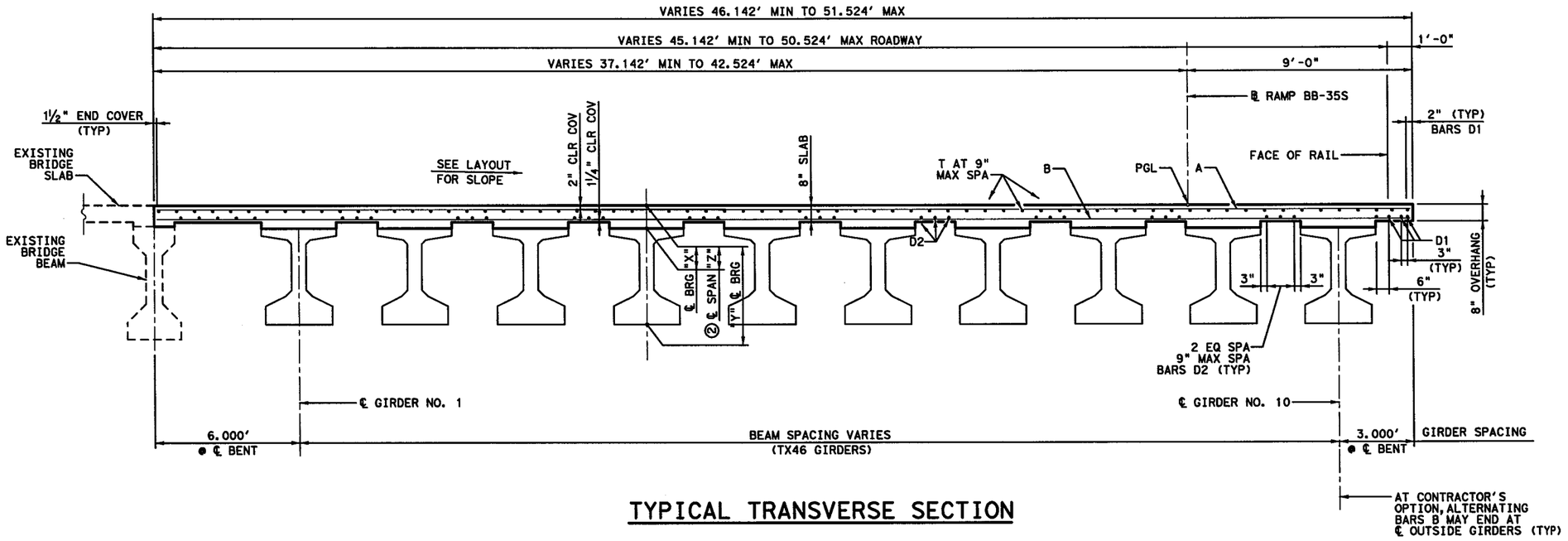

TYPICAL TRANSVERSE SECTION

GENERAL NOTES:

1. DESIGNED ACCORDING TO AASHTO LRFD BRIDGE DESIGN SPECIFICATIONS, 5TH EDITION (2010).
2. SEE PCP OR PMDF STANDARDS FOR DETAILS AND QUANTITY ADJUSTMENTS IF EITHER OF THESE OPTIONS ARE USED.
3. SEE IGTS STANDARD FOR THICKENED SLAB END DETAILS.
4. ALL REINFORCING STEEL SHALL BE GRADE 60 AND EPOXY COATED.
5. CLASS "S" (HPC) CONCRETE STRENGTH F'C = 4,000 PSI.
6. BAR LAPS, WHERE REQUIRED, WILL BE AS FOLLOWS: EPOXY COATED #4 = 2'-1"
   #5 = 2'-7"

STATE OF TEXAS
SHANE W. EBBERT
102017
LICENSED PROFESSIONAL ENGINEER
7/6/12

HALFF
TBPE REGISTRATION NO. F-312

Texas Department of Transportation
© 2012

IH 35W FROM NORTH TARRANT PKWY TO IH 820

267.30' PRESTRESSED CONCRETE I-GIRDER UNIT

SB IH35W G.P. & ENT. R. OVER WESTERN CENTER BLVD

SCALE: NTS — SHEET 2 OF 2

DESIGN	FED. RD. DIV. NO.	FEDERAL AID PROJECT NO.		HIGHWAY NO.
SWE	6	(SEE TITLE SHEET)		IH 35W
GRAPHICS SG	STATE	DISTRICT	COUNTY	SHEET NO.
CHECK PJR	TEXAS	FTW	TARRANT	1777
CHECK PJR	CONTROL	SECTION	JOB	
	0014	16	255, ETC.	

DRAWING DATE: 3:26:45 PM 7/13/2012 FILENAME: S3BBR#WCB-SB#PB#02.DGN

SUMMARY OF ESTIMATED QUANTITIES

BID ITEM / BRIDGE ELEMENT — BID ITEM DESCRIPTION	104 2009 REMOVING CONC (RIPRAP)	416 2004 DRILL SHAFT (36 IN)	420 2042 CL C CONC (HPC) (BENT)	420 2223 CL C CONC (HPC) (COLUMN)	422 2008 REINF CONC SLAB (EXT SLAB) (HPC) (CL S)	430 2126 CL C CONC FOR EXT STR (HPC) (ABUT)	430 2232 CL S CONC FOR EXT STR (HPC) (APPR SLAB)	425 2067 PRESTR CONC GIRDER (TX46)	428 2002 CONC SURF TREATMENT (CLASS II)	429 2007 CNC STR REP (HORIZ)	429 2008 CNC STR REP (VERT)	432 2001 RIPRAP (CONC) (4 IN)	438 2002 CLEAN AND SEAL EXIST JOINTS	438 2006 CLEAN AND SEAL CRACKS	450 2102 RAIL (TY SSTR) (HPC)
	SY	LF	CY	CY	SF	CY	CY	LF	SY	SF	SF	CY	LF	LF	LF
① 6 - ABUTMENTS	1297	1250				126.1	258					334			
① 6 - INTERIOR BENTS		768	128.1	113.4											
1 - 267.30' PRESTRESSED CONCRETE I-GIRDER UNIT (SPANS 1-3) (NB)					17,499			2,574.52	1,944	55	30		350	75	265.0
1 - 267.30' PRESTRESSED CONCRETE I-GIRDER UNIT (SPANS 1-3) (ML)					8,420			1,294.86	937						
1 - 267.30' PRESTRESSED CONCRETE I-GIRDER UNIT (SPANS 1-3) (SB)					13,358			2,157.62	1,484	45	20		360	40	271.0
TOTALS	1297	2018	128.1	113.4	39,277	126.1	258	6,027.00	4,365	100	50	334	710	115	536.0

① INCLUDES QUANTITIES FOR NB, ML, AND SB BRIDGE WIDENINGS.

SUMMARY OF ESTIMATED QUANTITIES

BID ITEM / BRIDGE ELEMENT — BID ITEM DESCRIPTION	454 2001 SEALED EXPANSION JOINT (4 IN) (SEJ-A)	514 PERM CONC TRF BARR (SGL SLP) (TY 1) (42") (HPC)	545 2001 CRASH CUSH ATTEN	0636 2001 ALUMINUM SIGNS (TY A)
	LF	LF	EA	SF
① 6 - ABUTMENTS	294			
① 6 - INTERIOR BENTS				
1 - 267.30' PRESTRESSED CONCRETE I-GIRDER UNIT (SPANS 1-3) (NB)		265	1	28
1 - 267.30' PRESTRESSED CONCRETE I-GIRDER UNIT (SPANS 1-3) (ML)		268		
1 - 267.30' PRESTRESSED CONCRETE I-GIRDER UNIT (SPANS 1-3) (SB)		271		28
TOTALS	294	804	1	56

BEARING SEAT ELEVATIONS (NB)

		BEAM 1	BEAM 2	BEAM 3	BEAM 4	BEAM 5	BEAM 6	BEAM 7	BEAM 8
ABUT 1	(FWD)	623.604	623.805	624.007	624.208	624.409	624.609	624.810	625.011
BENT 2	(BK)	623.636	623.853	624.070	624.287	624.503	624.720	624.936	625.152
	(FWD)	623.635	623.773	623.911	624.049	624.187	624.325	624.463	624.601
		BEAM 9	BEAM 10	BEAM 11	BEAM 12				
	(FWD)	624.739	624.876	625.014	625.152				
BENT 3	(BK)	623.291	623.424	623.557	623.690	623.823	623.956	624.089	624.222
	(FWD)	623.281	623.490	623.699	623.907	624.116	624.324	624.533	624.741
		BEAM 9	BEAM 10	BEAM 11	BEAM 12				
	(BK)	624.355	624.488	624.620	624.753				
ABUT 4	(BK)	622.808	623.009	623.210	623.411	623.611	623.812	624.012	624.212

BEARING SEAT ELEVATIONS (ML)

		BEAM 1	BEAM 2	BEAM 3	BEAM 4	BEAM 5	BEAM 6
ABUT 1	(FWD)	627.047	627.170	627.166	627.036		
BENT 2	(BK)	627.123	627.250	627.250	627.125		
	(FWD)	627.093	627.181	627.269	627.269	627.182	627.095
BENT 3	(BK)	626.785	626.877	627.969	626.974	626.892	626.810
	(FWD)	626.805	626.939	626.946	626.827		
ABUT 4	(BK)	626.335	626.473	626.484	626.370		

BEARING SEAT ELEVATIONS (SB)

		BEAM 1	BEAM 2	BEAM 3	BEAM 4	BEAM 5	BEAM 6	BEAM 7	BEAM 8
ABUT 1	(FWD)	624.801	624.619	624.436	624.254	624.071	623.889	623.706	
BENT 2	(BK)	625.086	624.903	624.721	624.538	624.356	624.173	623.990	
	(FWD)	625.089	624.965	624.841	624.716	624.592	624.467	624.343	624.218
		BEAM 9	BEAM 10						
	(FWD)	624.093	623.995						
BENT 3	(BK)	624.971	624.864	624.756	624.648	624.540	624.432	624.324	624.216
	(FWD)	624.964	624.770	624.577	624.383	624.189	624.995		
		BEAM 9	BEAM 10						
	(BK)	624.108	624.000						
ABUT 4	(BK)	624.566	624.391	624.216	624.040	623.865	623.690		

Shane W. Ebbert
STATE OF TEXAS
SHANE W. EBBERT
102017
LICENSED
PROFESSIONAL ENGINEER
8/29/12

HALFF
TBPE REGISTRATION NO. F-312

Texas Department of Transportation
© 2012

IH 35W FROM NORTH TARRANT PKWY TO IH 820

EST. QUANTITIES AND BEARING SEAT ELEV.

IH35W

OVER WESTERN CENTER BLVD

SCALE: NTS — SHEET 1 OF 1

DESIGN	FED. RD. DIV. NO.	FEDERAL AID PROJECT NO.		HIGHWAY NO.
SWE	6	(SEE TITLE SHEET)		IH 35W
GRAPHICS	STATE	DISTRICT	COUNTY	SHEET NO.
SG	TEXAS	FTW	TARRANT	
CHECK PJR	CONTROL	SECTION	JOB	1778
CHECK PJR	0014	16	255, ETC.	

DRAWING DATE: 2:31:02 PM 7/13/2012 FILENAME: S3BBR*WCB*EQ*01.DGN

DISCLAIMER:
The use of this standard is governed by the "Texas Engineering Practice Act". No warranty of any kind is made by TxDOT for any purpose whatsoever. TxDOT assumes no responsibility for the conversion of this standard to other formats or for incorrect results or damages resulting from its use.

LEVELS DISPLAYED

PATH:

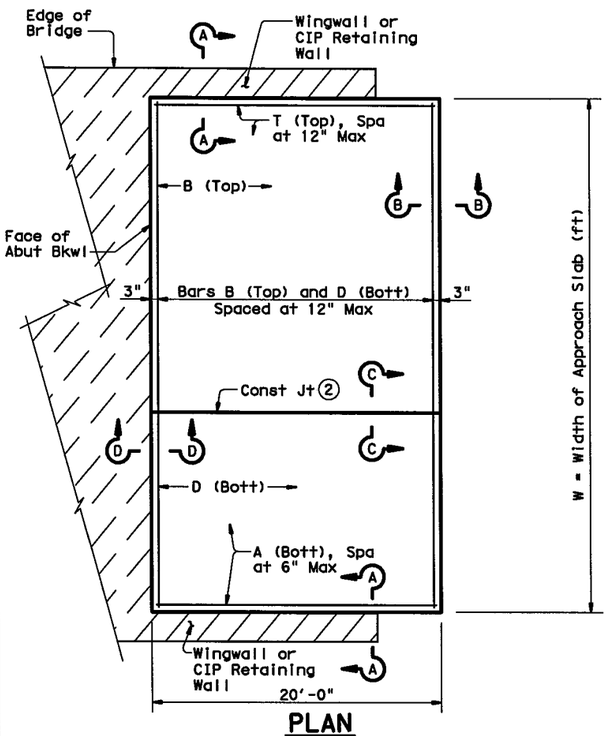

PLAN

(Showing Non-Skewed Approach Slab)

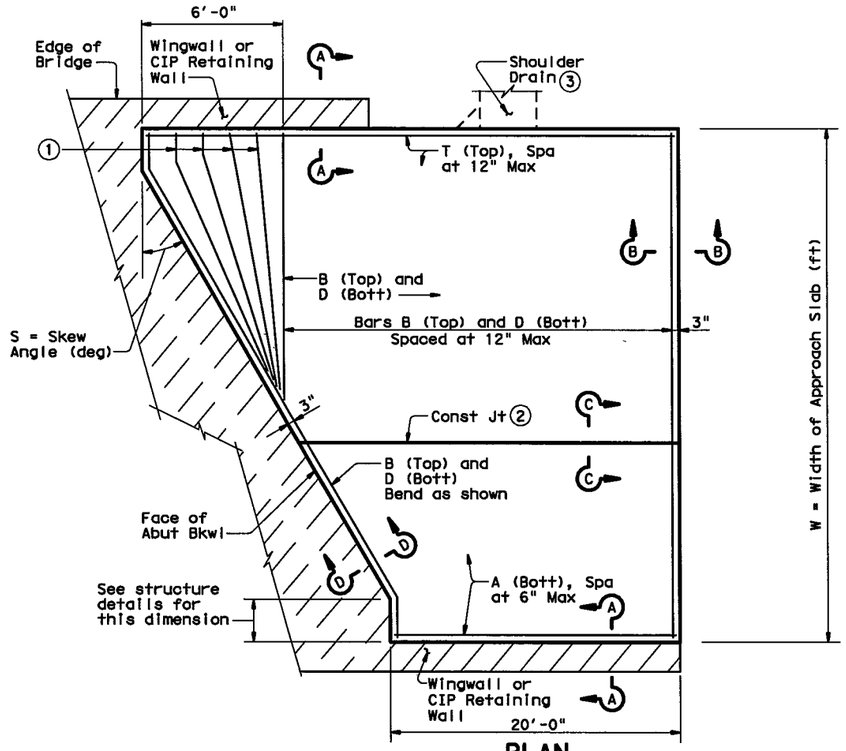

PLAN

(Showing Skewed Approach Slab)

BAR TABLE	
BAR	SIZE
A	#8
B	#5
D	#5
T	#5

APPROXIMATE QUANTITIES ④

Reinf steel weight = 8.5 Lbs/SF of Approach Slab

Area of Appr Slab = $20W + 0.5W^2 \tan S$ (SF)

W = Width of Approach Slab (ft)

S = Skew Angle (deg)

① Flare Bars B and D in this region (1'-6" Max Spa, 3" Min Spa). Minimum flared bar length = 2'-6". Bend bars as necessary.

② Provide longitudinal construction joints that align with longitudinal construction joints in the bridge slab with bridges built in stages. Other longitudinal construction joints must receive approval of the Engineer.

③ See details elsewhere in plans for shoulder drain location and details.

④ For Contractor's information only.

⑤ Multiple piece tie bars are acceptable at longitudinal construction joints provided minimum laps shown are achieved.

⑥ See details elsewhere in plans for required cross-slope.

⑦ Place in accordance with Item 438.

⑧ Backer rod shall be 25% larger than joint opening and shall be compatible with the sealant.

⑨ Place ½" Preformed Bituminous Fiber Material between concrete railing and top of approach slab as shown when concrete railing projects over the approach slab.

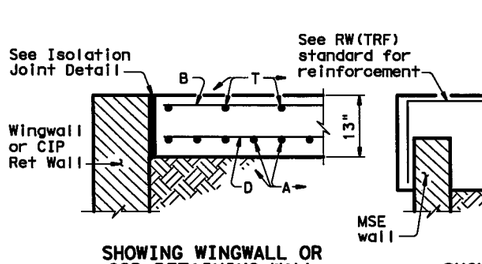

SHOWING WINGWALL OR CIP RETAINING WALL

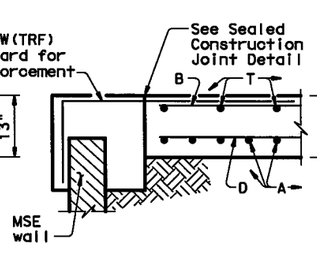

SHOWING MSE WALL

SECTION A-A

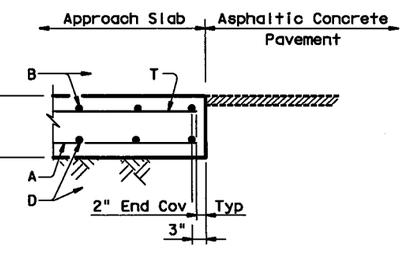

SECTION B-B

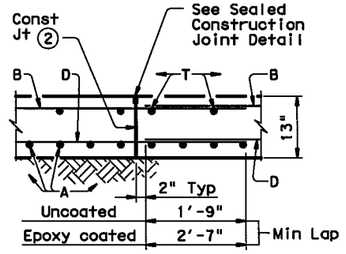

SECTION C-C ⑤

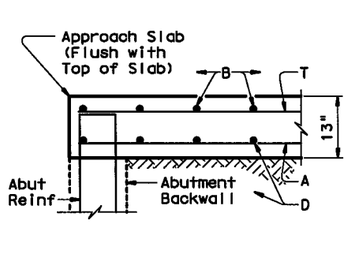

SECTION D-D

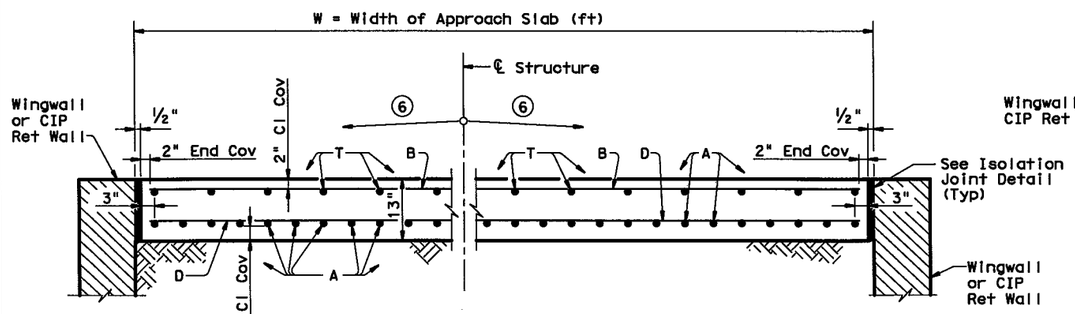

TYPICAL TRANSVERSE SECTION

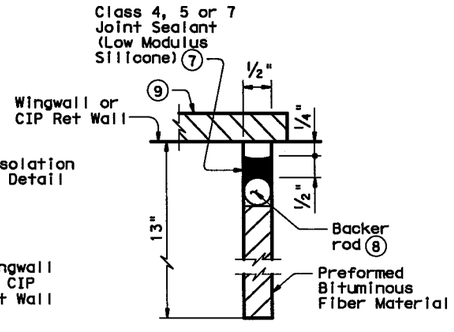

ISOLATION JOINT DETAIL

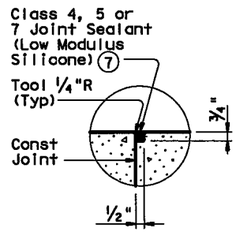

SEALED CONSTRUCTION JOINT DETAIL

GENERAL NOTES:

Construct approach slab in accordance with Item 420.

Concrete shall be Class "S" with a minimum compressive strength of 4,000 psi.

All reinforcing steel shall be Grade 60.

Construct the subgrade or subbase from the bridge for a minimum distance of 100 feet prior to the approach slab, unless otherwise indicated on the plans.

Compact and finish the subgrade or foundation for the approach slab to the typical cross-section and to the lines and grades shown on the plans.

Cure for 4 days using water or membrane curing per Item 420.

Sealant, backer rod and preformed bituminous fiber material is subsidiary to approach slab concrete.

Provide a 1" bondbreaker (asphaltic concrete pavement or asphalt stabilized base) between the approach slab and cement stabilized backfill or cement treated base. Other bondbreakers may be used if approved by the Engineer.

Texas Department of Transportation
Bridge Division

BRIDGE APPROACH SLAB

ASPHALTIC CONCRETE PAVEMENT

BAS-A

FILE: basastel.dgn	DN: TxDOT	CK: TxDOT	DW: TxDOT	CK: TxDOT
© TxDOT April 2006	DISTRICT	FEDERAL AID PROJECT		SHEET
REVISIONS	FTW	(SEE TITLE SHEET)		1779
	COUNTY	CONTROL	SECT	JOB	HIGHWAY
	TARRANT	14	16	255	IH 35W

DISCLAIMER:
The use of this standard is governed by the "Texas Engineering Practice Act". No warranty of any kind is made by TxDOT for any purpose whatsoever. TxDOT assumes no responsibility for the conversion of this standard to other formats or for incorrect results or damages resulting from its use.

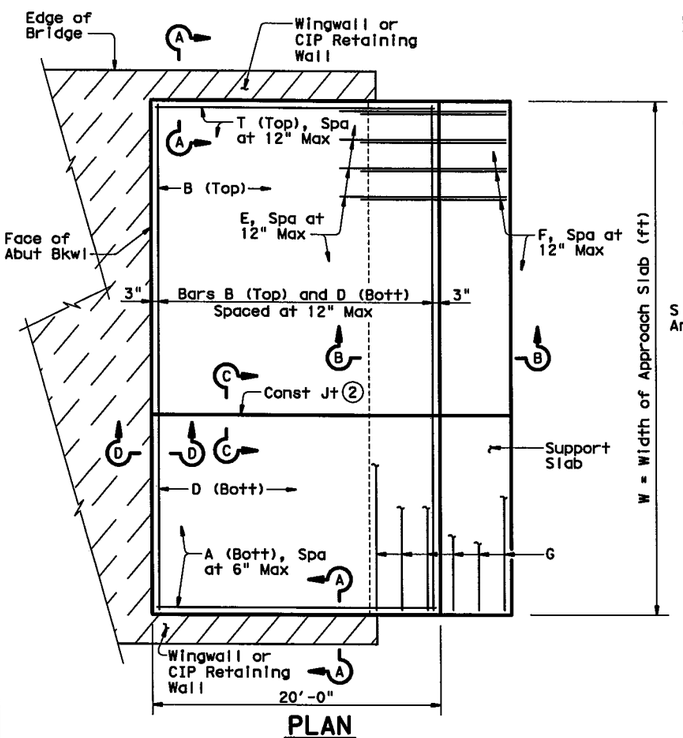

PLAN
(Showing Non-Skewed Approach Slab)

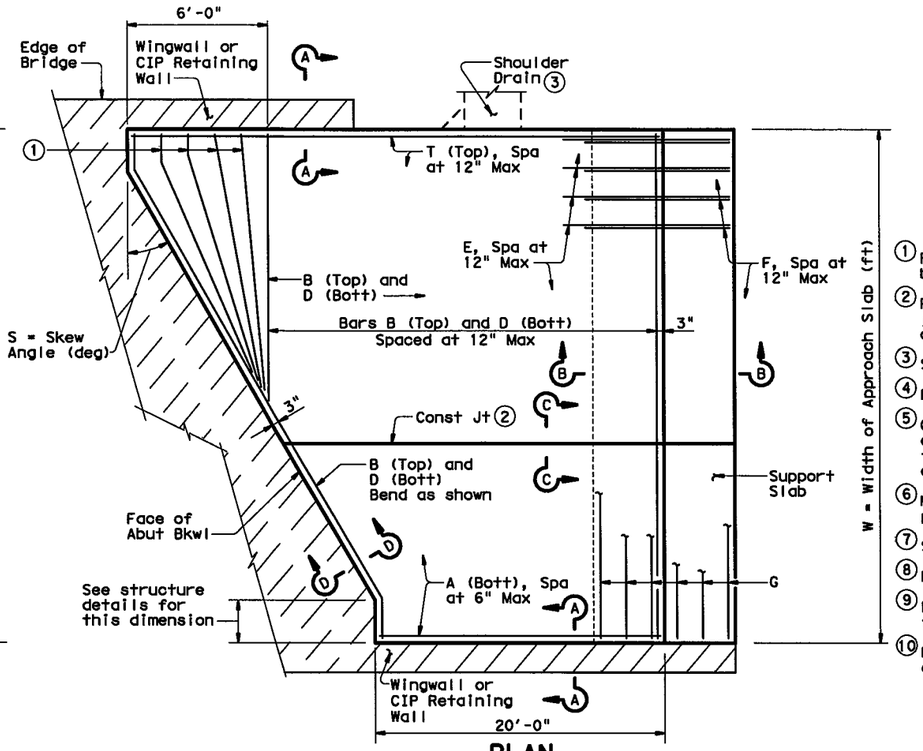

PLAN
(Showing Skewed Approach Slab)

BAR TABLE	
BAR	SIZE
A	#8
B	#5
D	#5
E	#5
F	#5
G	#5
T	#5

APPROXIMATE QUANTITIES (4)

Reinf steel weight = 8.5 Lbs/SF of Approach Slab
= 18.4 Lbs/LF of Support Slab

Area of Appr Slab = $20W + 0.5W^2 \tan S$ (SF)
(Support Slab not included)

W = Width of Approach Slab (ft)

S = Skew Angle (deg)

(1) Flare Bars B and D in this region (1'-6" Max Spa, 3" Min Spa). Minimum flared bar length = 2'-6". Bend bars as necessary.

(2) Provide longitudinal construction joints that align with longitudinal construction joints in the bridge slab with bridges built in stages. Other longitudinal construction joints must receive approval of the Engineer.

(3) See details elsewhere in plans for shoulder drain location and details.

(4) For Contractor's information only.

(5) On portion of support slab that supports the concrete pavement, adjust top surface elevation, if required, to accommodate concrete pavement thickness. Smooth trowel finish. Oil top of support slab with 60 grade oil and apply heavy coat of powdered graphite. Press down one layer of 30# roofing felt.

(6) Multiple piece tie bars are acceptable at longitudinal construction joints provided minimum laps shown are achieved.

(7) See details elsewhere in plans for required cross-slope.

(8) Place in accordance with Item 438.

(9) Backer rod shall be 25% larger than joint opening and shall be compatible with the sealant.

(10) Place ½" Preformed Bituminous Fiber Material between concrete railing and top of approach slab as shown when concrete railing projects over the approach slab.

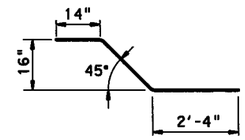

BARS E (#5)

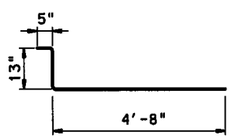

BARS F (#5)

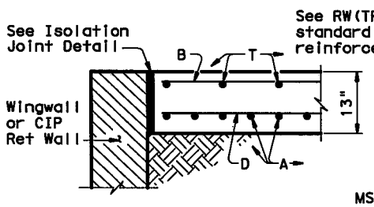

SHOWING WINGWALL OR CIP RETAINING WALL

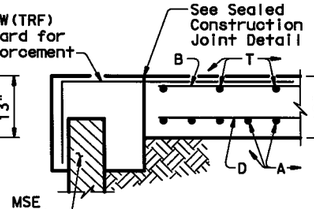

SHOWING MSE WALL

SECTION A-A

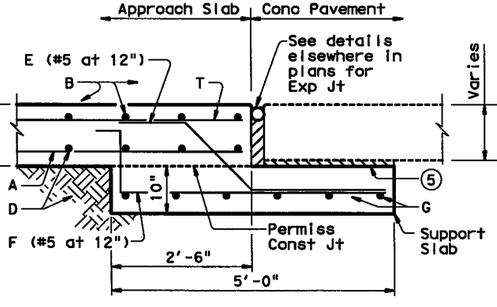

SECTION B-B

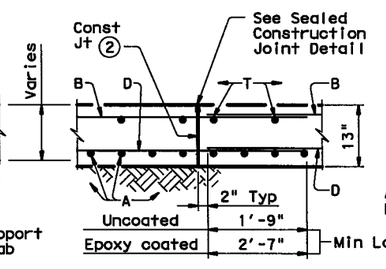

SECTION C-C (6)

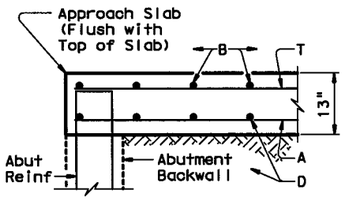

SECTION D-D

GENERAL NOTES:

Construct approach slab in accordance with Item 420.

Concrete shall be Class "S" with a minimum compressive strength of 4,000 psi.

All reinforcing steel shall be Grade 60.

Construct the subgrade or subbase from the bridge for a minimum distance of 100 feet prior to the approach slab, unless otherwise indicated on the plans.

Compact and finish the subgrade or foundation for the approach slab to the typical cross-section and to the lines and grades shown on the plans.

Cure for 4 days using water or membrane curing per Item 420.

Sealant, backer rod and preformed bituminous fiber material is subsidiary to approach slab concrete.

Provide a 1" bondbreaker (asphaltic concrete pavement or asphalt stabilized base) between the approach slab and cement stabilized backfill or cement treated base. Other bondbreakers may be used if approved by the Engineer.

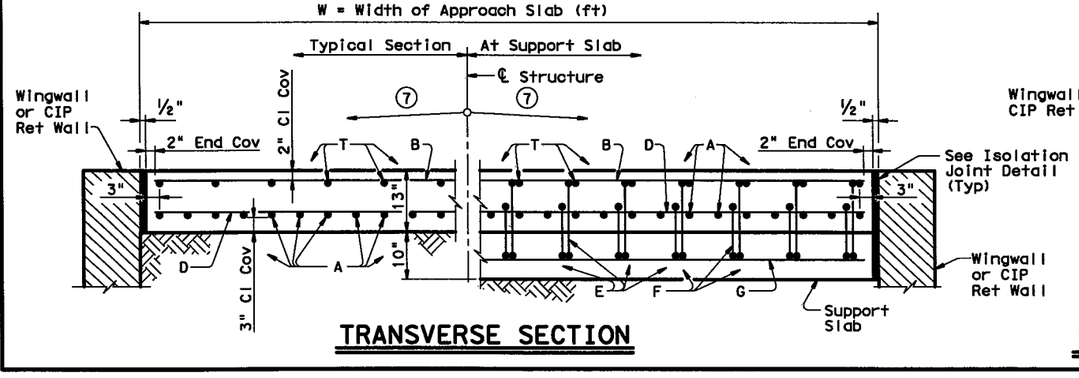

TRANSVERSE SECTION

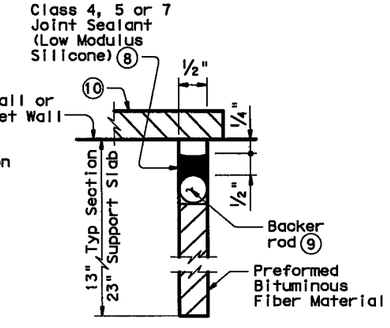

ISOLATION JOINT DETAIL

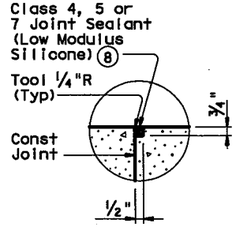

SEALED CONSTRUCTION JOINT DETAIL

Texas Department of Transportation
Bridge Division

BRIDGE APPROACH SLAB
CONCRETE PAVEMENT

BAS-C

FILE: bascstel.dgn	DN: TxDOT	CK: TxDOT	DW: TxDOT	CK: TxDOT
© TxDOT April 2006	DISTRICT	FEDERAL AID PROJECT		SHEET
REVISIONS	FTW	(SEE TITLE SHEET)		1780
	COUNTY	CONTROL	SECT	JOB	HIGHWAY
	TARRANT	14	16	255	IH 35W

LEVELS DISPLAYED
PATH:

DISCLAIMER:
The use of this standard is governed by the "Texas Engineering Practice Act". No warranty of any kind is made by TxDOT for any purpose whatsoever. TxDOT disclaims responsibility for the conversion of this standard to other formats or for incorrect results or damages resulting from its use.

LEVELS DISPLAYED | ACC:

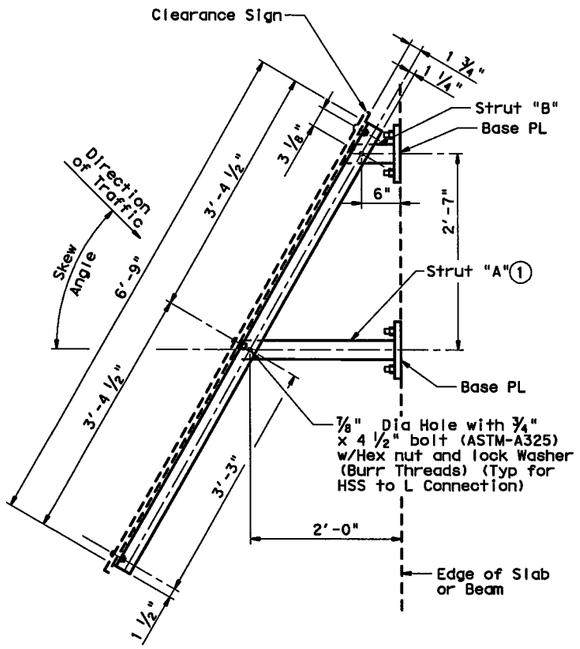

PLAN OF TYPE S MOUNT

(Used for Skews over 30°)

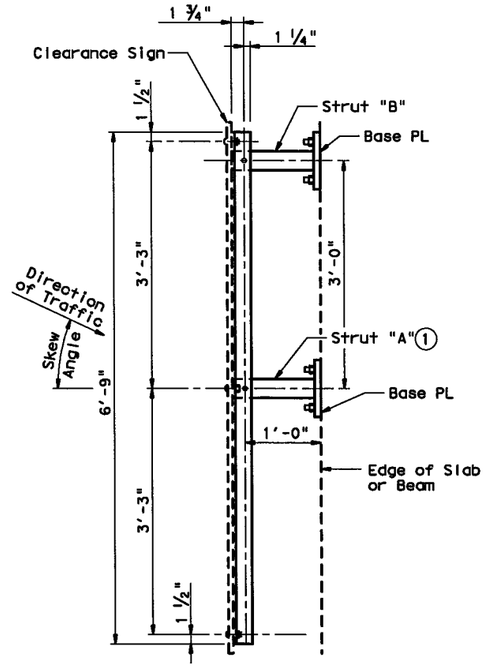

PLAN OF TYPE N MOUNT

(Used for 0° to 30° Skews)

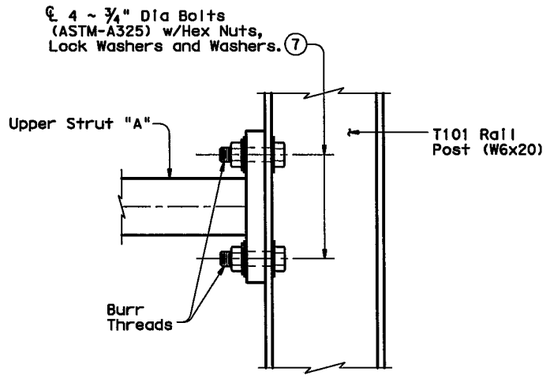

SHOWING ELEVATION VIEW OF CONNECTION AT T101 RAIL POST

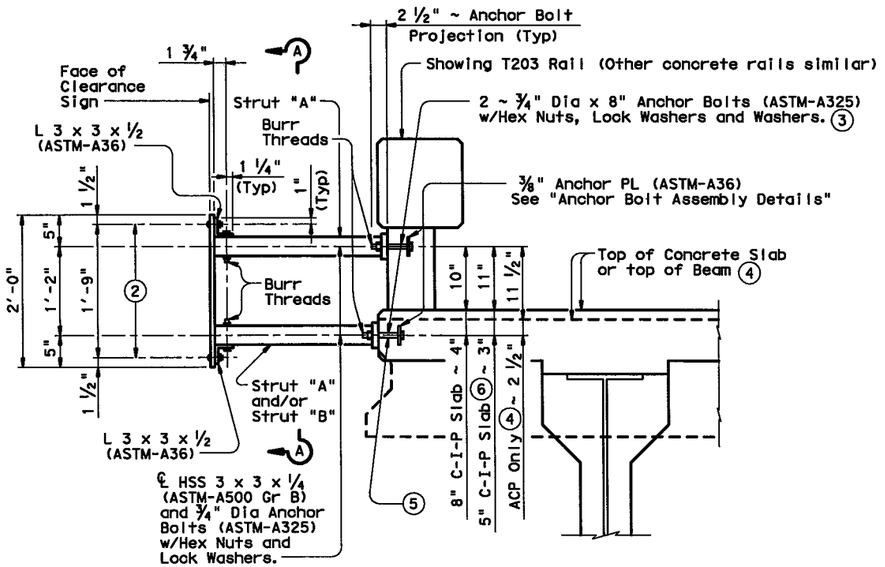

SECTION

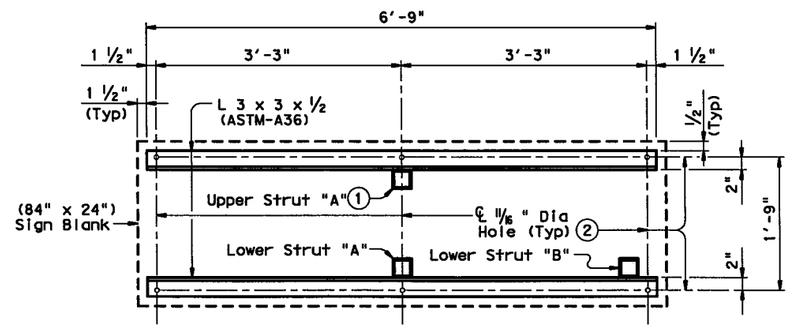

VIEW A-A

(1) Locate centerline of Strut A no closer than 12" from a vertical concrete edge.

(2) ℄ ⅝" Dia x 2" Hexagon Socket Button Head Cap Screws (ASTM A574) w/Hex Nuts. Attach hex nuts to L 3 x 3 x ½ by tack welding in two places. Threads shall have Class 3A fit tolerance in accordance ASME B1.1. Six screws required.

(3) Epoxy anchors utilizing ¾" Dia A193 Grade B7 anchor rods (no expansion anchors) can be substituted for the anchor bolts detailed at all locations. Minimum pullout strength of epoxy anchors must exceed 7 kips, taking spacing and edge distances into consideration. Install according to the manufacturer's specifications. Min embedment allowed is 6". Galvanize anchor rods and lock washers and washers used with optional epoxy anchors.

(4) For Prestressed Concrete Box Beams and Dbl-T Beams topped with a 2 course surface treatment and ACP overlay.

(5) Anchor bolts to be cast in Box Beams and Dbl-T Beams topped with a 2 course surface treatment and ACP overlay. The Anchor Bolts w/Hex Nuts, Lock Washers and Anchor PL that is embeded in the beam will be provided by the beam fabricator.

(6) For Prestressed Concrete Box Beams, Slab Beams and Dbl-T Beams with a composite cast-in-place slab used as a topping.

(7) Field Drill 13/16 " Holes in back of T101 Rail Post.

GENERAL NOTES:

This standard provides details to mount a vertical clearance sign (84" x 24") to bridges. Rail Types T6, T77, PR1 and PR2 are not accommodated.

The vertical face of clearance sign will be plumb unless otherwise approved by the Engineer.

All steel components shall be galvanized after fabrication unless otherwise noted.

The Engineer will furnish the clearance to be shown on the sign.

See Bridge Layout for sign location and mounting type (Type N or S).

Cost of furnishing, installing, relocating or removing a Clearance Sign will be included in unit price bid for "Aluminum Signs (Type A)".

One Sign Blank (84" x 24") is 14 SF.

Average steel weight for one complete Type N Mount is 209 Lb.

Average steel weight for one complete Type S Mount is 222 Lb.

Sign mounts will be paid for at the unit price bid for "Structural Steel (Misc)".

SHEET 1 OF 2

Texas Department of Transportation
Bridge Division

BRIDGE MOUNTED CLEARANCE SIGN ASSEMBLY

BMCS

FILE: bmosstel.dgn		DN: TxDOT	CK: TxDOT	DW: TxDOT		CK: TxDOT	
©TxDOT April 2006		DISTRICT	FEDERAL AID PROJECT				SHEET
REVISIONS 08-2007: Removed reference of W12-2P.		FTW	(SEE TITLE SHEET)				1781
		COUNTY			CONTROL	SECT	JOB	HIGHWAY
		TARRANT			14	16	255	IH 35W

DISCLAIMER:
The use of this standard is governed by the "Texas Engineering Practice Act". No warranty of any kind is made by TxDOT for any purpose whatsoever. TxDOT assumes no responsibility for the conversion of this standard to other formats or for incorrect results or damages resulting from its use.

LEVELS DISPLAYED | ACC:

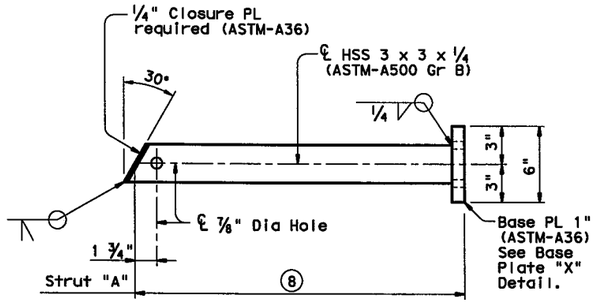

FOR T101, T411 AND C411 RAIL TYPES

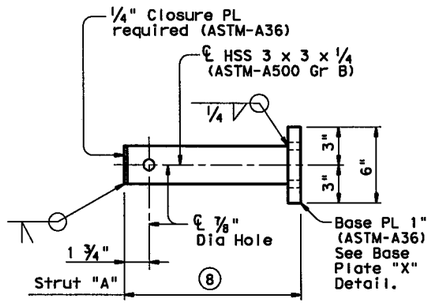

FOR T101, T411 AND C411 RAIL TYPES

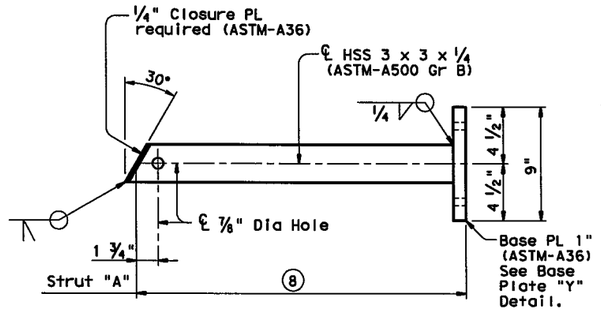

FOR T203, C203, T221, C221, T401, T402, C402, T501, C501, T502, C502, T503, T504, HT AND SSTR RAIL TYPES

UPPER STRUT DETAIL FOR (TYPE S MOUNT)

(Used for Skews over 30°)

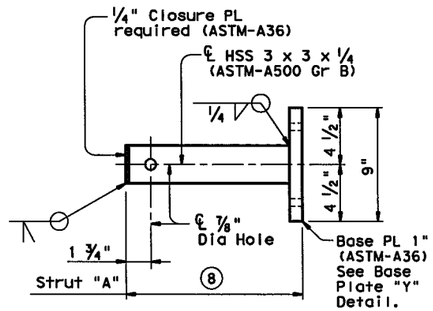

FOR T203, C203, T221, C221, T401, T402, C402, T501, C501, T502, C502, T503, T504, HT AND SSTR RAIL TYPES

UPPER STRUT DETAIL FOR (TYPE N MOUNT)

(Used for 0° to 30° Skews)

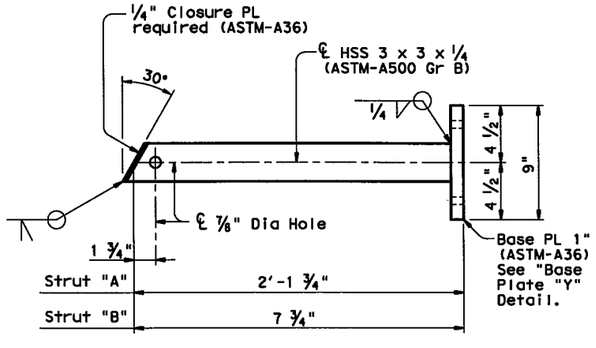

LOWER STRUT DETAILS FOR (TYPE S MOUNT)

(Used for Skews over 30°)

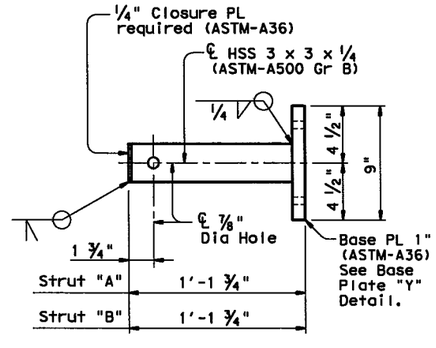

LOWER STRUT DETAILS FOR (TYPE N MOUNT)

(Used for 0° to 30° Skews)

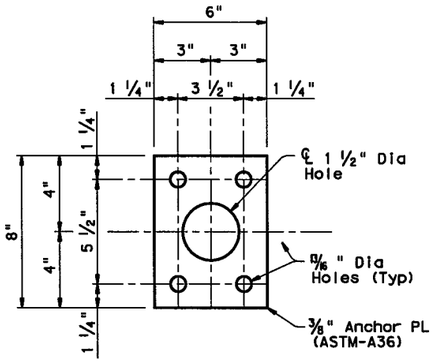

PLAN OF ANCHOR PLATE

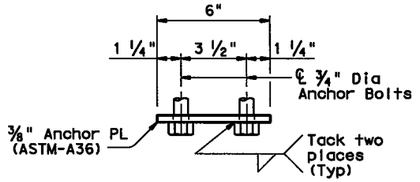

ELEVATION

ANCHOR BOLT ASSEMBLY DETAILS ③

(USED ON UPPER BASE PLATE "X" WITH T411 & C411 RAIL TYPES)

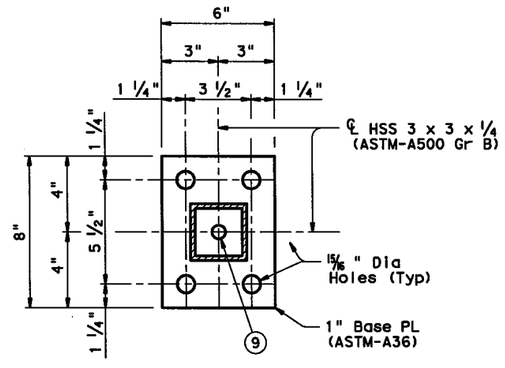

BASE PLATE "X" DETAIL

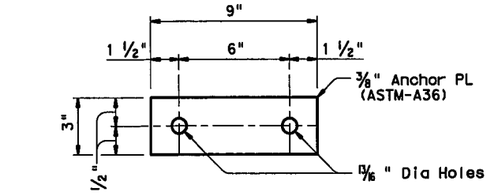

PLAN OF ANCHOR PLATE

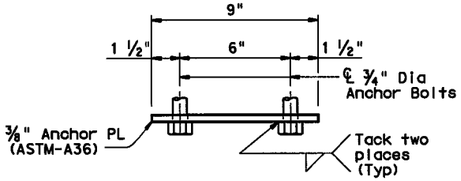

ELEVATION

ANCHOR BOLT ASSEMBLY DETAILS ③

(USED ON UPPER AND/OR LOWER BASE PLATE "Y")

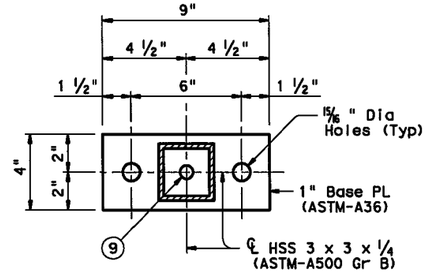

BASE PLATE "Y" DETAIL

③ Epoxy anchors utilizing A193 Grade B7 anchor rods (no expansion anchors) can be substituted for the anchor bolts detailed at all locations. Minimum pullout strength of epoxy anchors must exceed 7 kips, taking spacing and edge distances into consideration. Install according to the manufacturer's specifications. Min embedment allowed is 6". Galvanize anchor rods and lock washers and washers used with optional epoxy anchors.

⑧ Adjust length to accommodate edge of slab to back of rail for specific project conditions and to help plumb the vertical face of clearance sign.

⑨ Hole required to drain zinc from base plate during galvanizing.

Texas Department of Transportation
Bridge Division

BRIDGE MOUNTED CLEARANCE SIGN ASSEMBLY

BMCS

FILE: bmcsste1.dgn	DN: TxDOT	CK: TxDOT	DW: TxDOT	CK: TxDOT			
©TxDOT April 2006	DISTRICT	FEDERAL AID PROJECT					SHEET
REVISIONS 08-2007: Removed reference of W12-2P.	FTW	(SEE TITLE SHEET)					1782
	COUNTY			CONTROL	SECT	JOB	HIGHWAY
	TARRANT			14	16	255	IH 35W

DISCLAIMER:
The use of this standard is governed by the "Texas Engineering Practice Act". No warranty of any kind is made by TxDOT for any purpose whatsoever. TxDOT assumes no responsibility for the conversion of this standard to other formats or for incorrect results or damages resulting from its use.

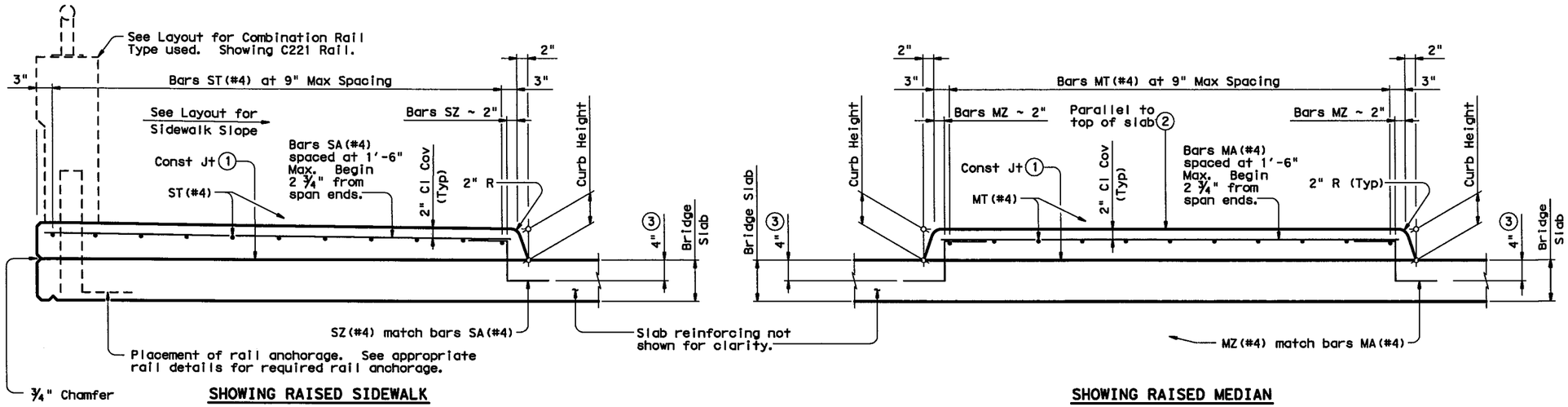

TYPICAL TRANSVERSE SECTIONS

See Span Details for dimensions not shown.

(1) Provide broom finish to top of bridge slab where raised sidewalk or raised median area is defined.

(2) Unless noted otherwise on the span details.

(3) Bars may rest on top of PCP's.

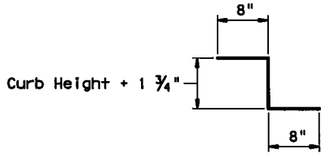

BARS SZ(#4) AND MZ(#4)

APPROVED SLIP RESISTANT PLATE	
Product	Manufacturer Website
Mebac® #3, Steel	www.harscoikg.com
Algrip™, Steel	www.algrip.com
SlipNOT® Grade 2, Steel	www.slipnot.com

Drain cover plates must be fabricated with a product from this list. No exceptions are permitted.

MATERIAL NOTES:

Provide the same concrete required for the bridge deck, Class S or Class S (HPC).

Provide Grade 60 reinforcement. Welded wire reinforcement (WWR) meeting ASTM A497 of equivalent size and spacing may be substituted for bars SA, ST, MA, and MT.

Epoxy coat reinforcement if bridge deck reinforcement is required to be epoxy coated.

Hot-dip galvanize slip resistant steel plate after fabrication in accordance with Item 445, "Galvanizing". Chamfer or round edges approximately 1/16" prior to galvanizing.

GENERAL NOTES:

Designed according to AASHTO LRFD Specifications.

Provide the following bar or wire lap lengths when required:
Uncoated, 1'-5" Min
Coated, 2'-1" Min

Submittal and approval of drain cover plate shop drawings is not required if fabrication is accordance with these details.

Raised sidewalks will be paid under Item 420 by the CY of Class S Concrete (Bridge Sdwlk) or Class S Concrete (Bridge Sdwlk)(HPC). Raised medians will be paid under Item 420 by the CY of Class S Concrete (Bridge Median) or Class S Concrete (Bridge Median)(HPC).

Payment for drain cover plates will be by the pound of "Structural Steel (Misc Non-Bridge)" as per Item 442, "Metal for Structures". Weight of one drain cover plate is 48 plf.

DESIGNER NOTES:

These details do not apply for longitudinal grades exceeding 5 percent.

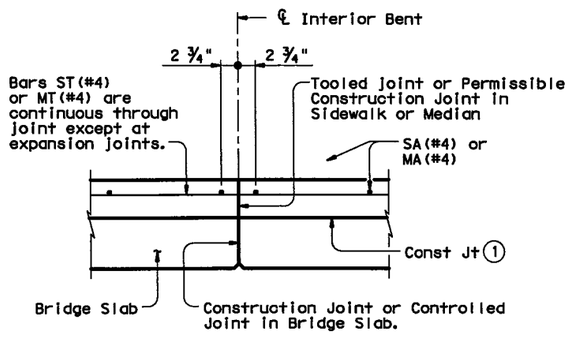

LONGITUDINAL SECTION AT INTERIOR BENT

At Bents with expansion joints, provide an open joint in the sidewalk/median matching the deck's joint width.

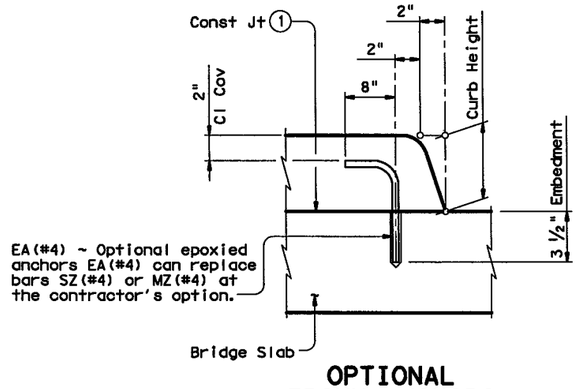

OPTIONAL EPOXY ANCHORS

Embed EA(#4) bar into concrete with a Type III (Class C) epoxy meeting the requirements of DMS-6100, "Epoxies and Adhesives". Follow manufacturer's directions for installing the epoxied anchor bars.

SHEET 1 OF 2

Texas Department of Transportation
Bridge Division

BRIDGE RAISED SIDEWALK AND MEDIAN DETAILS

BRSM

FILE: brsmstel.dgn	DN: JMH	CK: TxDOT	DW: JTR	CK: TxDOT
© TxDOT January 2012	DISTRICT	FEDERAL AID PROJECT		SHEET
REVISIONS	FTW	(SEE TITLE SHEET)		1783
	COUNTY	CONTROL	SECT	JOB	HIGHWAY
	TARRANT	14	16	255	IH 35W

LEVELS DISPLAYED
PATH:
1:1

DISCLAIMER:
The use of this standard is governed by the "Texas Engineering Practice Act". No warranty of any kind is made by TxDOT for any purpose whatsoever. TxDOT assumes no responsibility for the conversion of this standard to other formats or for incorrect results or damages resulting from its use.

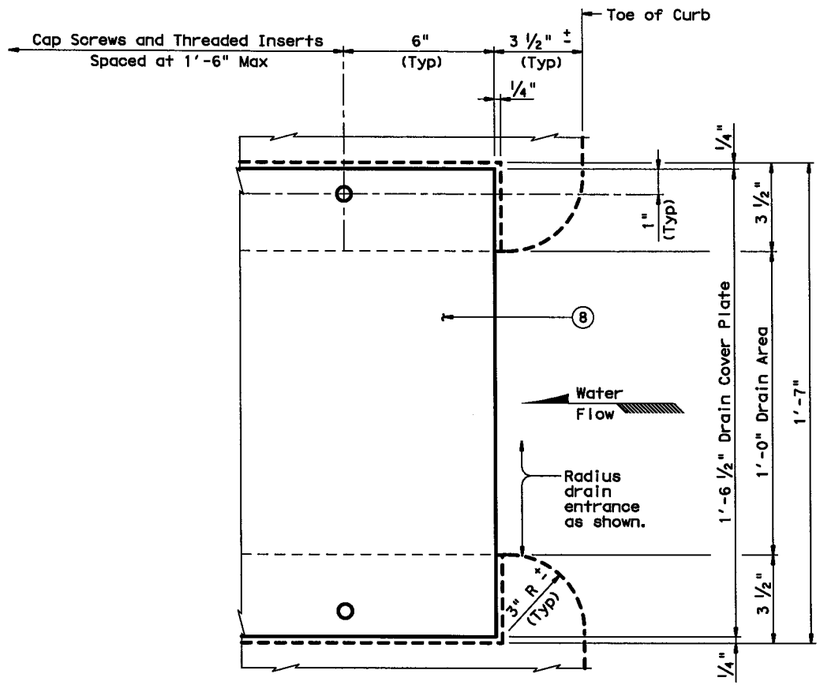

PARTIAL PLAN CURB DRAIN

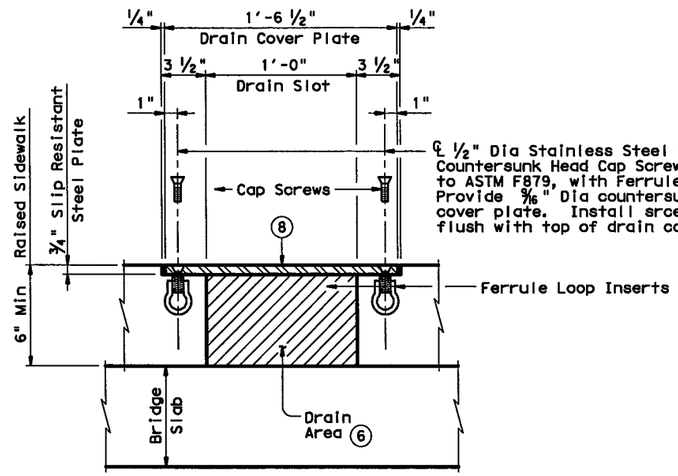

SECTION B-B

Reinforcing not shown for clarity.

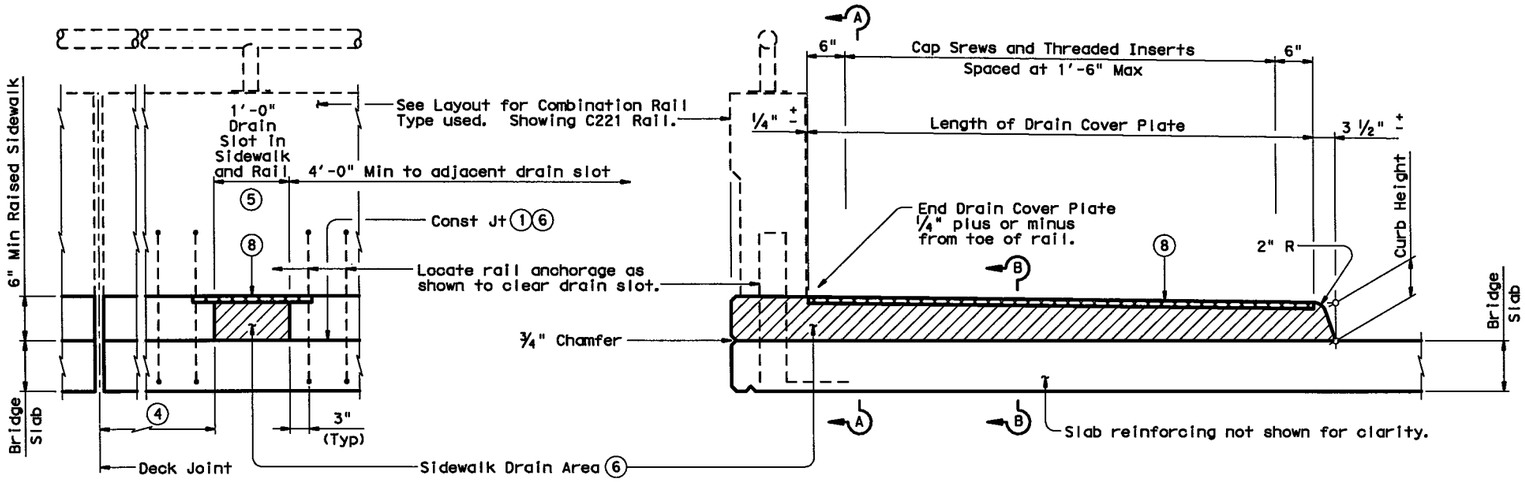

SECTION A-A

SHOWING RAISED SIDEWALK WITH DRAIN SLOT

OPTIONAL DRAIN DETAILS (7)

(1) Provide broom finish to top of bridge slab where raised sidewalk or raised median area is defined.

(4) 3'-0" Min at Deck Expansion Joints, Deck Construction Joints or Controlled Joints, Rail Intermediate Wall Joints or from face of substructure.

(5) For rail Type C1W, center drain slots between posts.

(6) Steel trowel top surface of bridge deck in drain locations.

(7) Provide sidewalk drains where shown elsewhere on the plans or as directed by the Engineer. Do not place drains over railroad tracks, lower roadways, or sidewalks. Place Drain and Cover Plate perpendicular to toe of rail.

(8) Drain Cover Plate (PL ¾ x 18 ½ Slip Resistant Steel Plate). Install flush with top of sidewalk.

LEVELS DISPLAYED
PATH:
1

SHEET 2 OF 2

Texas Department of Transportation
Bridge Division

BRIDGE RAISED SIDEWALK AND MEDIAN DETAILS

BRSM

FILE: brsmstel.dgn	DN: JMH	CK: TxDOT	DW: JTR	CK: TxDOT			
©TxDOT January 2012	DISTRICT	FEDERAL AID PROJECT					SHEET
REVISIONS	FTW	(SEE TITLE SHEET)					1784
	COUNTY			CONTROL	SECT	JOB	HIGHWAY
	TARRANT			14	16	255	IH 35W

DISCLAIMER:
The use of this standard is governed by the "Texas Engineering Practice Act". No warranty of any kind is made by TxDOT for any purpose whatsoever. TxDOT assumes no responsibility for the conversion of this standard to other formats or for incorrect results or damages resulting from its use.

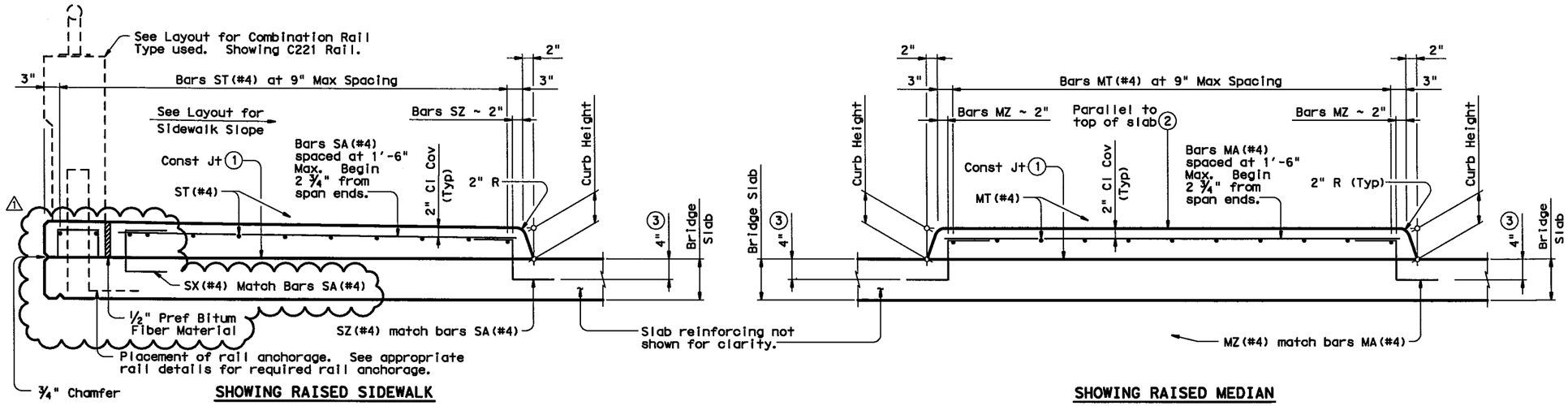

TYPICAL TRANSVERSE SECTIONS

See Span Details for dimensions not shown.

① Provide broom finish to top of bridge slab where raised sidewalk or raised median area is defined.

② Unless noted otherwise on the span details.

③ Bars may rest on top of PCP's.

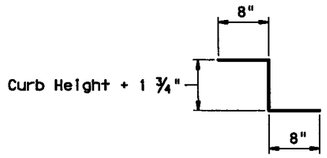

BARS SZ(#4) AND MZ(#4)

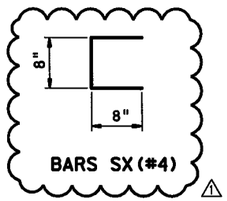

BARS SX(#4) ⚠

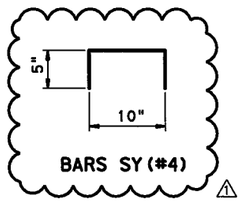

BARS SY(#4) ⚠

APPROVED SLIP RESISTANT PLATE	
Product	Manufacturer Website
Mebac® #3, Steel	www.harscoikg.com
Algrip™, Steel	www.algrip.com
SlipNOT® Grade 2, Steel	www.slipnot.com

Drain cover plates must be fabricated with a product from this list. No exceptions are permitted.

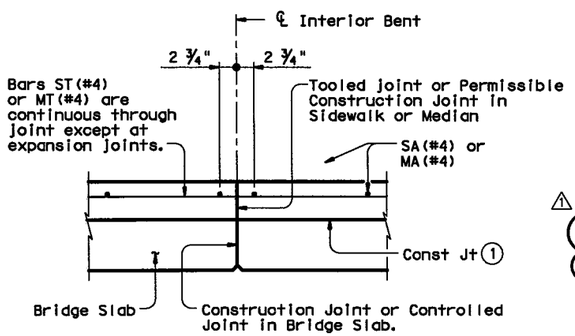

LONGITUDINAL SECTION AT INTERIOR BENT

At Bents with expansion joints, provide an open joint in the sidewalk/median matching the deck's joint width.

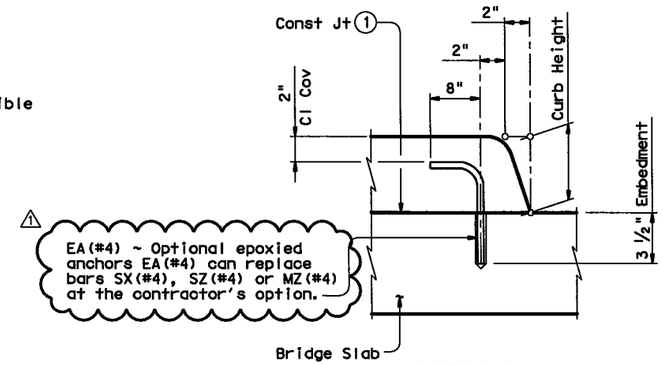

OPTIONAL EPOXY ANCHORS

Embed EA(#4) bar into concrete with a Type III (Class C) epoxy meeting the requirements of DMS-6100, "Epoxies and Adhesives". Follow manufacturer's directions for installing the epoxied anchor bars.

MATERIAL NOTES:

Provide the same concrete required for the bridge deck, Class S or Class S (HPC).

⚠ Provide Grade 60 reinforcement. Welded wire reinforcement (WWR) meeting ASTM A497 of equivalent size and spacing may be substituted for bars SA, ST, SX, MA, and MT.

Epoxy coat reinforcement if bridge deck reinforcement is required to be epoxy coated.

Hot-dip galvanize slip resistant steel plate after fabrication in accordance with Item 445, "Galvanizing". Chamfer or round edges approximately 1/16" prior to galvanizing.

GENERAL NOTES:

Designed according to AASHTO LRFD Specifications.

Provide the following bar or wire lap lengths when required:
- Uncoated, 1'-5" Min
- Coated, 2'-1" Min

Submittal and approval of drain cover plate shop drawings is not required if fabrication is accordance with these details.

Raised sidewalks will be paid under Item 420 by the CY of Class S Concrete (Bridge Sdwlk) or Class S Concrete (Bridge Sdwlk)(HPC). Raised medians will be paid under Item 420 by the CY of Class S Concrete (Bridge Median) or Class S Concrete (Bridge Median)(HPC).

Payment for drain cover plates will be by the pound of "Structural Steel (Misc Non-Bridge)" as per Item 442, "Metal for Structures". Weight of one drain cover plate is 48 plf.

DESIGNER NOTES:

These details do not apply for longitudinal grades exceeding 5 percent.

TBPE REGISTRATION NO. F-1475

7/06/2012

⚠ MODIFIED SIDEWALK GEOMETRY AND REINFORCEMENT TO ACCOMMODATE PHASED CONSTRUCTION.

SHEET 1 OF 2

Texas Department of Transportation
Bridge Division

BRIDGE RAISED SIDEWALK AND MEDIAN DETAILS

BRSM(MOD)

FILE: brsmstel.dgn	DN: JMH	CK: TxDOT	DW: JTR	CK: TxDOT
©TxDOT January 2012	DISTRICT	FEDERAL AID PROJECT		SHEET
REVISIONS	FTW	(SEE TITLE SHEET)		1785
	COUNTY	CONTROL	SECT	JOB	HIGHWAY
	TARRANT	14	16	255	IH 35W

LEVELS DISPLAYED
PATH:

DISCLAIMER:
The use of this standard is governed by the "Texas Engineering Practice Act". No warranty of any kind is made by TxDOT for any purpose whatsoever. TxDOT assumes no responsibility for the conversion of this standard to other formats or for incorrect results or damages resulting from its use.

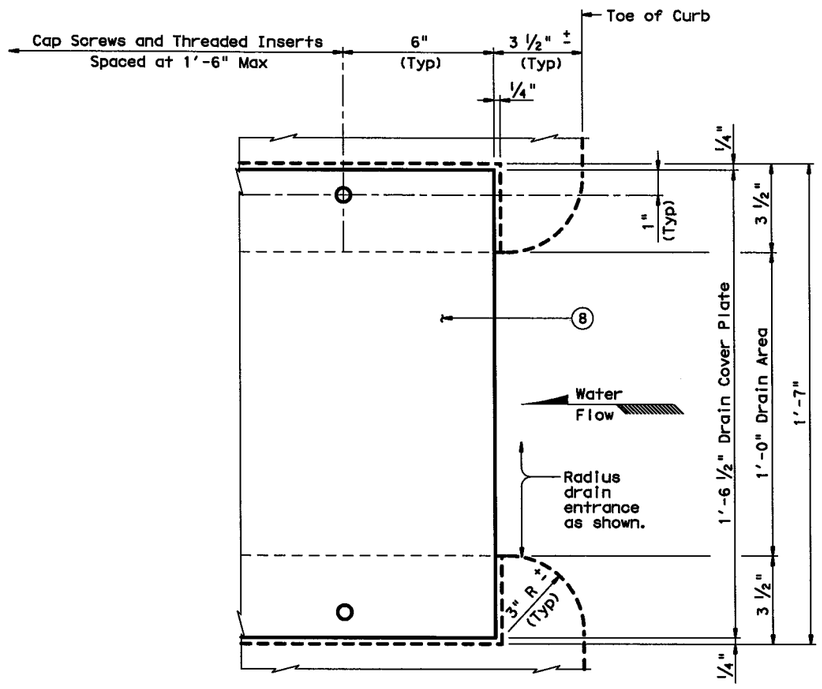

PARTIAL PLAN CURB DRAIN

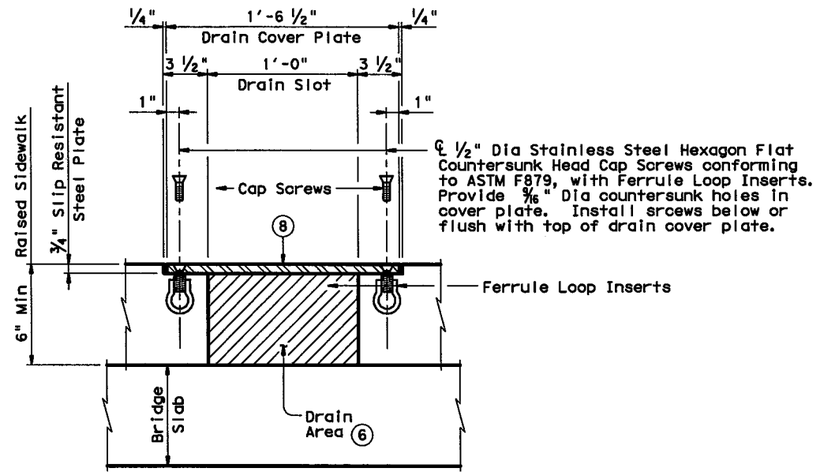

SECTION B-B

Reinforcing not shown for clarity.

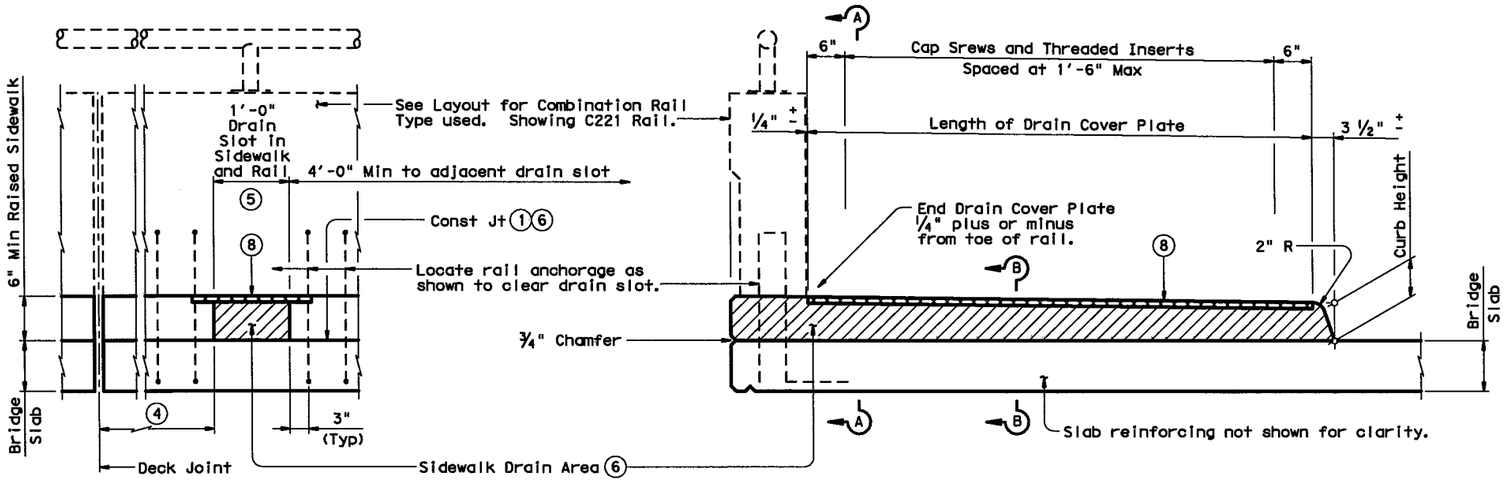

SECTION A-A

SHOWING RAISED SIDEWALK WITH DRAIN SLOT

OPTIONAL DRAIN DETAILS 7

1. Provide broom finish to top of bridge slab where raised sidewalk or raised median area is defined.
4. 3'-0" Min at Deck Expansion Joints, Deck Construction Joints or Controlled Joints, Rail Intermediate Wall Joints or from face of substructure.
5. For rail Type C1W, center drain slots between posts.
6. Steel trowel top surface of bridge deck in drain locations.
7. Provide sidewalk drains where shown elsewhere on the plans or as directed by the Engineer. Do not place drains over railroad tracks, lower roadways, or sidewalks. Place Drain and Cover Plate perpendicular to toe of rail.
8. Drain Cover Plate (PL ¾ x 18 ½ Slip Resistant Steel Plate). Install flush with top of sidewalk.

TBPE REGISTRATION NO. F-1475

7/06/2012

⚠ MODIFIED SIDEWALK GEOMETRY AND REINFORCEMENT TO ACCOMMODATE PHASED CONSTRUCTION ON SHEET 1 OF 2.

SHEET 2 OF 2

Texas Department of Transportation
Bridge Division

BRIDGE RAISED SIDEWALK AND MEDIAN DETAILS

BRSM(MOD)

FILE: brsmstel.dgn	DN: JMH	CK: TxDOT	DW: JTR	CK: TxDOT			
©TxDOT January 2012	DISTRICT	FEDERAL AID PROJECT			SHEET		
REVISIONS	FTW	(SEE TITLE SHEET)			1786		
	COUNTY		CONTROL	SECT	JOB	HIGHWAY	
	TARRANT		14	16	255	IH 35W	

LEVELS DISPLAYED

PATH:

DISCLAIMER:
The use of this standard is governed by the "Texas Engineering Practice Act". No warranty of any kind is made by TxDOT for any purpose whatsoever. TxDOT assumes no responsibility for the conversion of this standard to other formats or for incorrect results or damages resulting from its use.

ACC:

LEVELS DISPLAYED

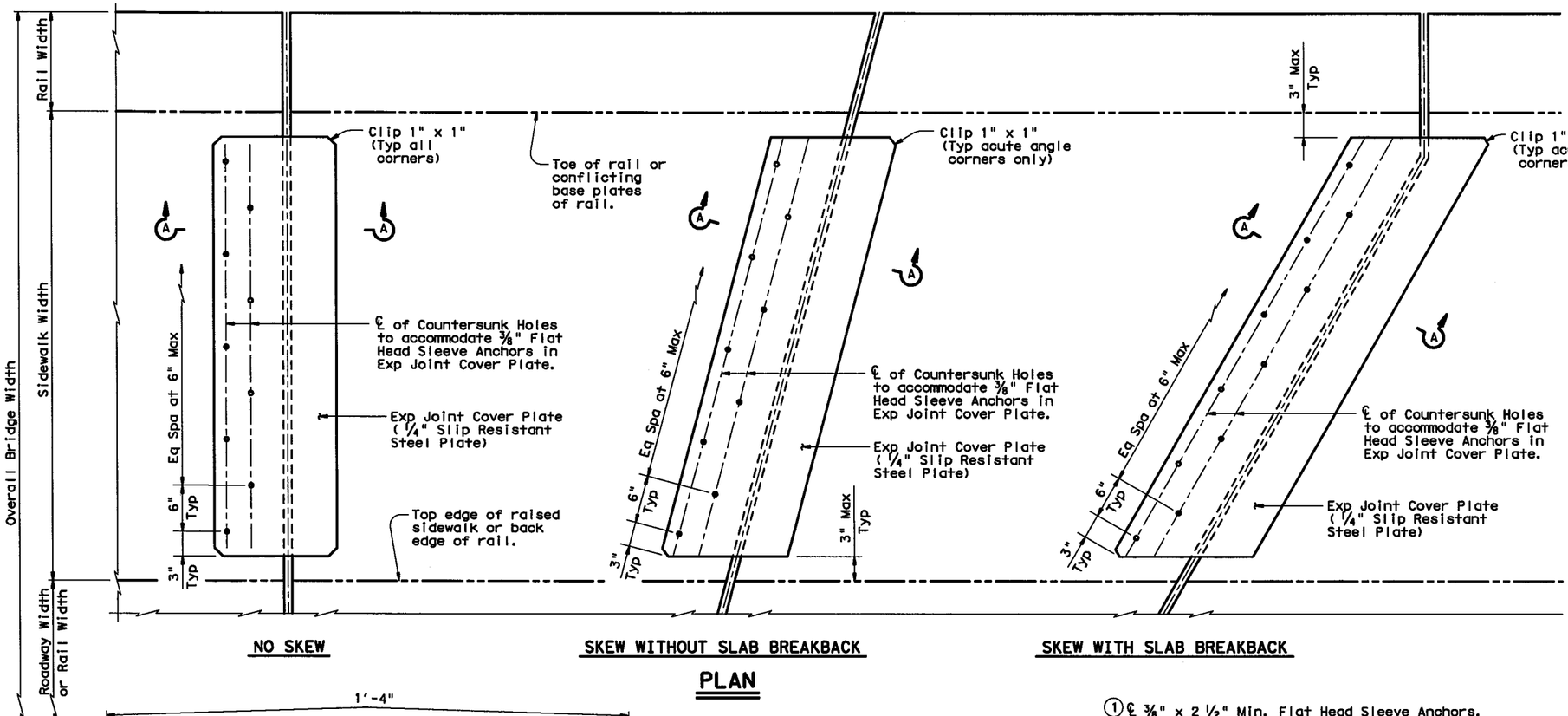

PLAN

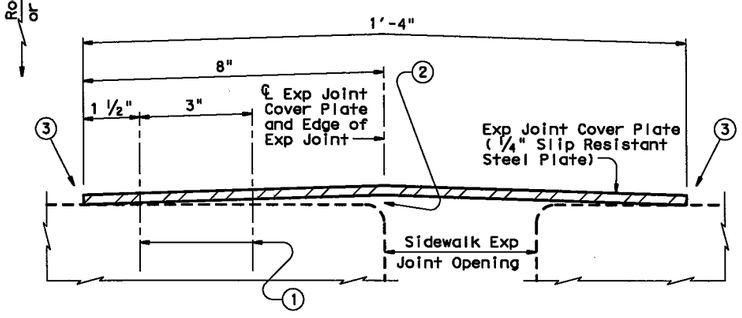

SHOWING LEVEL EXP JOINT

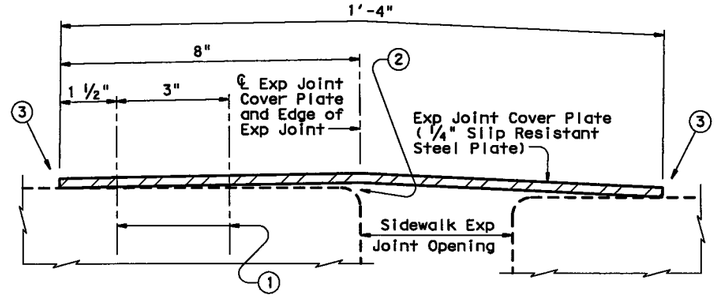

SHOWING UNLEVEL EXP JOINT
(Install Sleeve Anchors on high side of Exp Joint)

SECTION A-A

① ℄ ⅜" x 2 ½" Min, Flat Head Sleeve Anchors, Stainless Steel. Countersink Flat Head Sleeve Anchors in ¼" Slip Resistant Steel Plate.

② It is not necessary to remove plate crown provided the plate is firmly secured to the sidewalk.

③ Transverse edges must be in contact with sidewalk surface after installation.

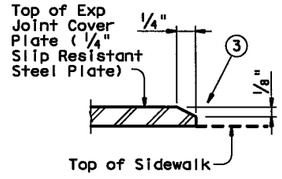

EXP JOINT COVER PLATE BEVEL DETAIL

Bevel all plate edges as shown.

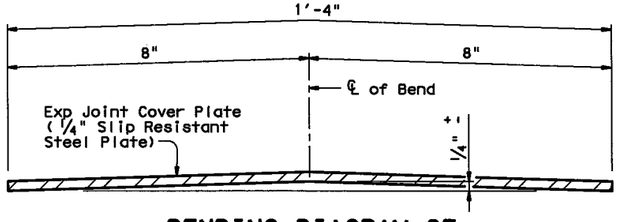

BENDING DIAGRAM OF EXP JOINT COVER PLATE

APPROVED SLIP RESISTANT PLATE	
Product	Manufacturer Website
Mebac® #2, Steel	www.ikgindustries.com
Algrip™, Steel	www.algrip.com
SlipNOT® Grade 2, Steel	www.slipnot.com

GENERAL NOTES:

Sidewalk expansion joint cover plates can only accommodate up to a 7" maximum expansion joint.

Details provided are applicable to concrete walkway surfaces only.

Sidewalk expansion joint cover plates must be hot-dipped galvanized ¼" slip resistant steel plate. Checker plate or diamond plate is not allowed nor are slip resistant tapes, films and non-metallic coatings.

Minimum required yield strength of steel plate is 36 ksi.

Hot-dip galvanize slip resistant steel plate after fabrication in accordance with Item 445, "Galvanizing".

Provide stainless steel flat head sleeve anchors meeting the requirements of ASTM F 593, Group I, Alloy 304. Countersink holes in slip-resistant plate for sleeve anchors. Drill holes in sidewalk as per sleeve anchor manufacturer's recommendations. Install sleeve anchors flush with, or slightly recessed below, top surface of sidewalk expansion joint cover plate.

Shop drawings for the fabrication of Sidewalk Expansion Joint Cover Plate will not require the Engineer's approval if fabrication is in accordance with the details shown on this standard.

A Bridge Sidewalk Expansion Joint Cover Plate Layout which identifies location side of sleeve anchors and orientation of all cover plate sections will be developed by the fabricator. Mark each steel section in accordance with the Bridge Sidewalk Expansion Joint Cover Plate Layout. A copy of the Bridge Sidewalk Expansion Joint Cover Plate Layout is to be provided to the Engineer.

Payment for sidewalk expansion joint cover plates will be by the pound of "Structural Steel (Misc)" as per Item 442, "Metal for Structures".

Estimated weight of one sidewalk expansion joint cover plate is 14 plf.

Texas Department of Transportation
Bridge Division

BRIDGE SIDEWALK EXPANSION JOINT COVER PLATE (ALL SKEWS)

BS-EJCP

FILE: bsejstel.dgn	DN: TxDOT	CK: TxDOT	DW: TxDOT	CK: TxDOT
© TxDOT April 2006	DISTRICT	FEDERAL AID PROJECT		SHEET
REVISIONS	FTW	(SEE TITLE SHEET)		1787
	COUNTY	CONTROL	SECT	JOB	HIGHWAY
	TARRANT	14	16	255	IH 35W

DISCLAIMER:
The use of this standard is governed by the "Texas Engineering Practice Act". No warranty of any kind is made by TxDOT for any purpose whatsoever. TxDOT assumes no responsibility for the conversion of this standard to other formats or for incorrect results or damages resulting from its use.

ACC:

LEVELS DISPLAYED

1

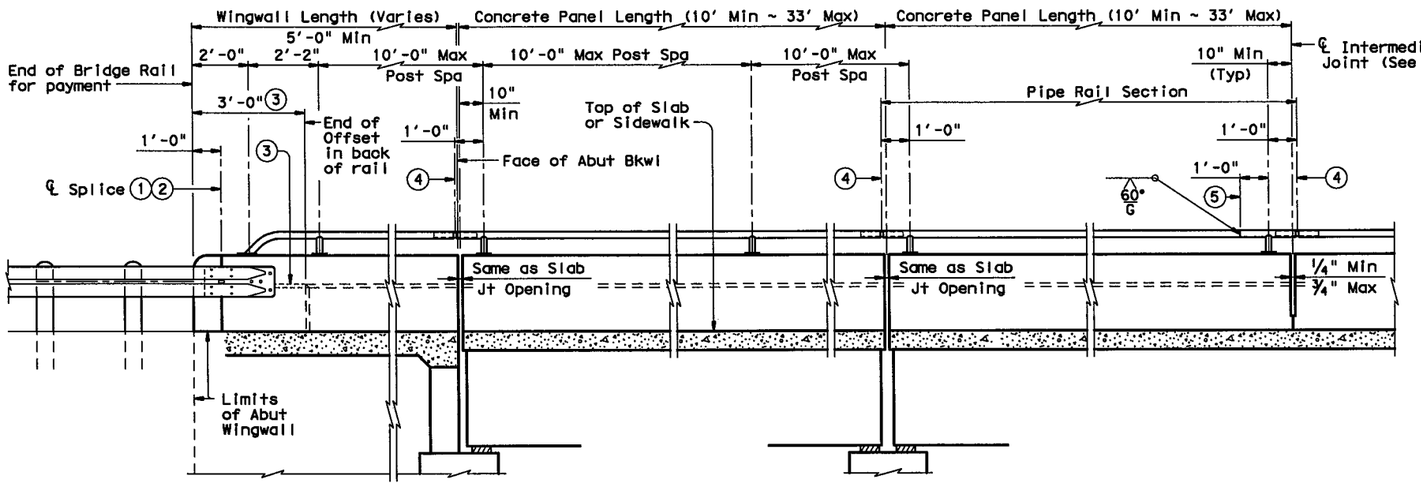

AT ABUTMENT BENTS
Showing TL-2 Transition

AT SLAB EXP JOINTS

AT INTERMEDIATE WALL JOINTS

ROADWAY ELEVATION OF RAIL

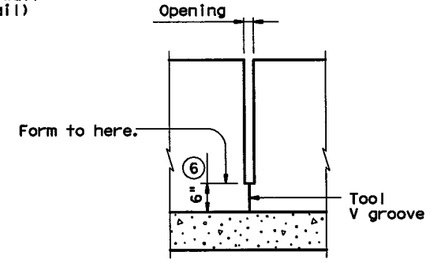

INTERMEDIATE WALL JOINT DETAIL

Provide at all interior bents without slab expansion joints. Space equally in between at 33' Max, 10' Min. Location independent of pipe rail splices.

① Metal Beam Guard Fence Transitions must be attached to the bridge rail and extended along the embankment unless otherwise shown in the plans.

② Terminal Connector and associated hardware are to be paid for under the Item "Metal Beam Guard Fence".

③ Back of rail offset may, with Engineer's approval be continued to the end of the railing.

④ ℄ Exp Joint or Splice Joint as required.

⑤ One shop splice per pipe rail section is permitted with minimum 85 percent penetration. The weld may be square groove, or single vee groove. Grind smooth.

⑥ Increase 2" for structures with overlay.

⑦ Bolts must be of sufficient length to extend ½" to ¾" beyond nut.

⑧ Bolt recesses are only required when pedestrian sidewalks are adjacent to back of rail.

⑨ 4 additional Bars R(#4) 3'-8" in length must be placed inside Bars S(#4) and centered 2'-0" from end of rail when Terminal Connections are required. Field bend as needed.

⑩ 2 ½" Std Pipe (2.875" O.D. 0.203" wall thickness)

⑪ 2" Std Pipe (2.375" O.D., 0.154" wall thickness)

⑫ ⅜" Dia Hole in bottom of pipe or tube (Minimum 1 hole between posts ~ Typ)

ELEVATION

SECTION

TL-2 TERMINAL CONNECTION DETAILS

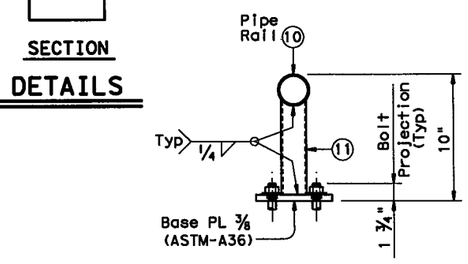

TRANSVERSE SECTION

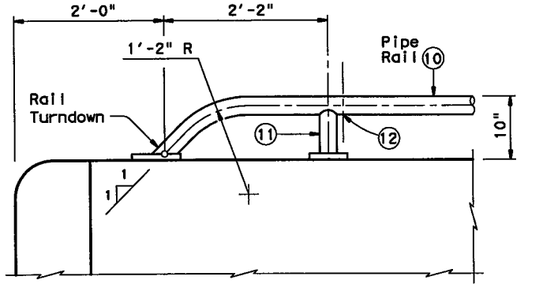

Note that at least two anchor points (as shown) are required for the Bridge Rail on the Abutment Wingwall. Longer Wingwalls may require more than two Rail anchorages.

PIPE RAIL TERMINAL DETAIL

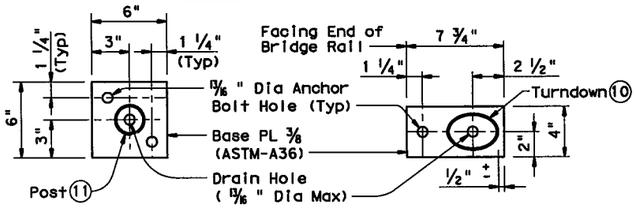

POST BASE PLATE PLAN

RAIL TURNDOWN BASE PLATE PLAN

PIPE RAIL DETAILS

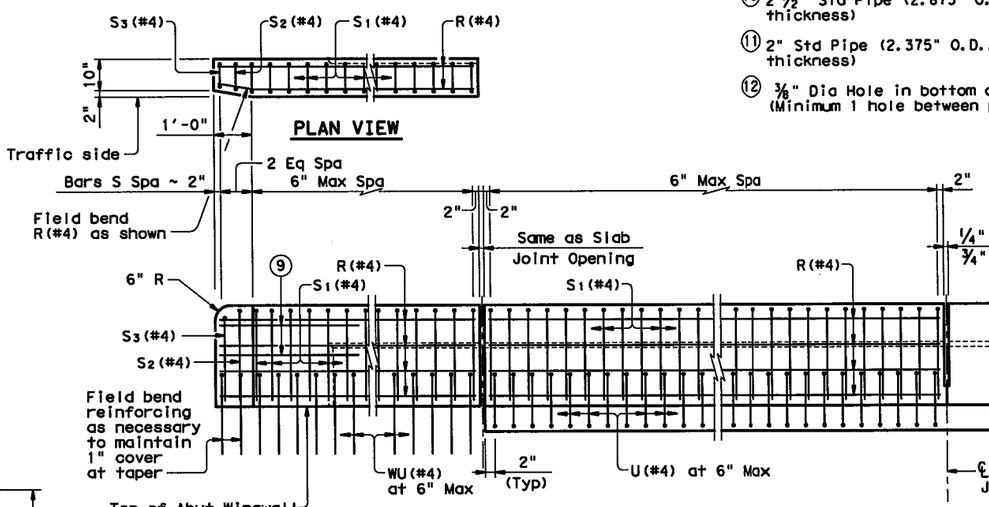

ELEVATION SHOWING TYPICAL REINFORCING PLACEMENT

(Showing without raised sidewalk)

The use of this railing is restricted to design speeds of 45 mph or less.

SHEET 1 OF 3

Texas Department of Transportation
Bridge Division

COMBINATION RAIL

TYPE C221

FILE: rlstd018.dgn	DN: TxDOT	CK: TxDOT	DW: JTR	CK: JMH
© TxDOT April 2009	DISTRICT	FEDERAL AID PROJECT		SHEET
REVISIONS	FTW	(SEE TITLE SHEET)		1788
05-11: Wall Joint Note.	COUNTY	CONTROL	SECT	JOB	HIGHWAY
	TARRANT	14	16	255	IH 35W

DISCLAIMER:
The use of this standard is governed by the "Texas Engineering Practice Act". No warranty of any kind is made by TxDOT for any purpose whatsoever. TxDOT assumes no responsibility for the conversion of this standard to other formats or for incorrect results or damages resulting from its use.

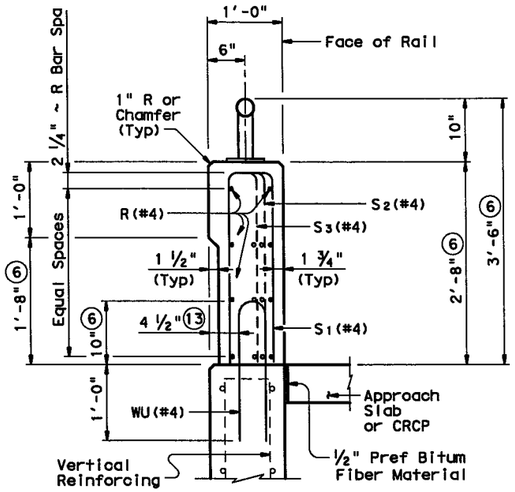

ON ABUTMENT WINGWALLS OR CIP RETAINING WALLS

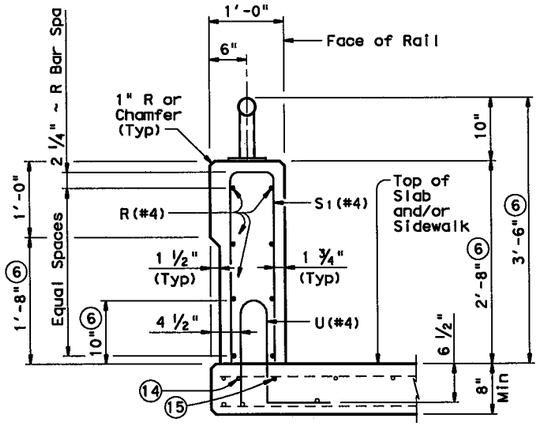

ON BRIDGE SLAB

SECTIONS THRU RAIL WITHOUT RAISED SIDEWALK

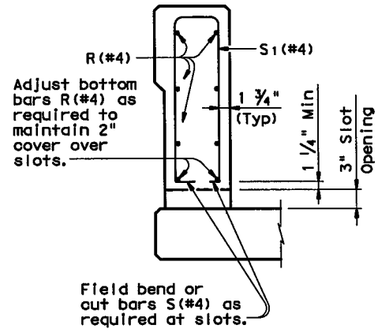

SECTION THRU OPTIONAL SIDE SLOT DRAIN

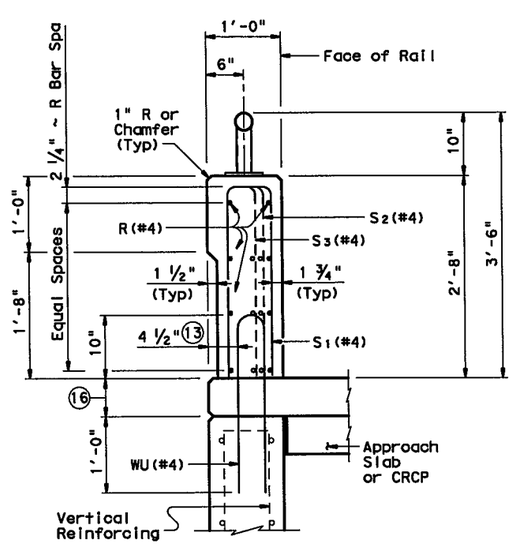

ON ABUTMENT WINGWALLS OR CIP RETAINING WALLS

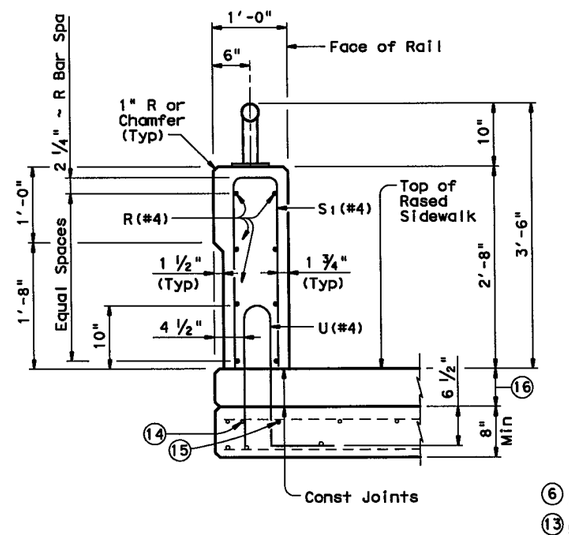

ON BRIDGE SLAB

SECTIONS THRU RAIL WITH RAISED SIDEWALK

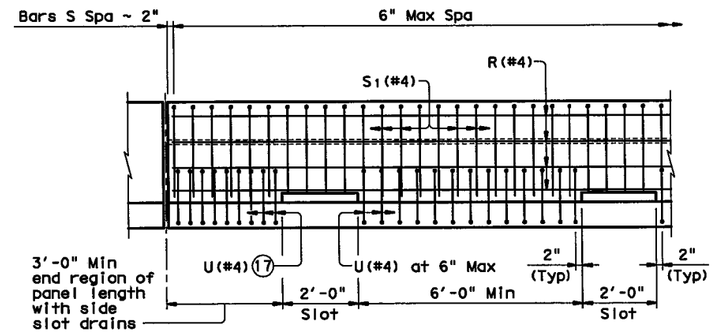

OPTIONAL SIDE SLOT DRAIN DETAIL

Note: Side Slot Drains may be used where shown elsewhere on the plans or as directed by the Engineer. Drains should not be placed over railroad tracks, lower roadways, or sidewalks. When this rail is used as a separator between a roadway surface and a sidewalk surface, side drain slots will not be permitted.

⑥ Increase 2" for structures with overlay.

⑬ 5 1/2" when vertical reinforcing has closer clear cover over horizontal reinforcing in abutment wingwalls or retaining walls on traffic side of wall.

⑭ As an aid in supporting reinforcement, additional longitudinal bars may be used in the slab with the approval of the Engineer. Such bars must be furnished at the Contractors expense.

⑮ Top longitudinal slab bar may be adjusted laterally 3" plus or minus to tie reinforcing.

⑯ Raised Sidewalk

⑰ Space U(#4) bars at 4" Max when end region of panel length is less than 6'-0" to side slot drain. Space U(#4) bars at 6" Max when end region of panel length is 6'-0" and greator to side slot drain.

Texas Department of Transportation
Bridge Division

COMBINATION RAIL

TYPE C221

FILE: rlstd018.dgn	DN: TxDOT	CK: TxDOT	DW: JTR	CK: JMH
©TxDOT April 2009	DISTRICT	FEDERAL AID PROJECT		SHEET
REVISIONS 05-11: Wall Joint Note.	FTW	(SEE TITLE SHEET)		1789
	COUNTY	CONTROL	SECT	JOB	HIGHWAY
	TARRANT	14	16	255	IH 35W

LEVELS DISPLAYED | ACC:

DISCLAIMER:
The use of this standard is governed by the "Texas Engineering Practice Act". No warranty of any kind is made by TxDOT for any purpose whatsoever. TxDOT disclaims no responsibility for the conversion of this standard to other formats or for incorrect results or damages resulting from its use.

RAIL DATA FOR HORIZONTAL CURVES			
	RADIUS TO FACE OF RAIL	MAX CHORD LENGTH	CONSTRUCT OR FABRICATE
Pipe Rail	Over 2800'	29'-0"	Straight rail panels
	Over 1400' thru 2800'	14'-6"	To required radius or to chords shown (18)
	Over 700' thru 1400'	7'-3"	
	Thru 700'	Zero	To required radius (18)

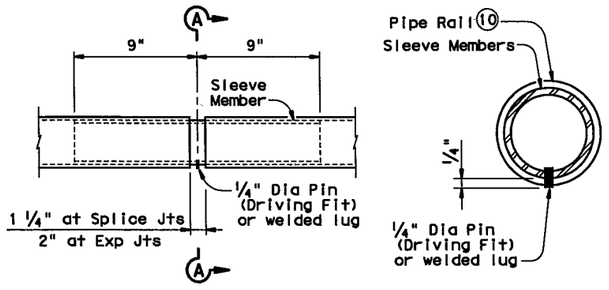

AT SPLICE OR EXP JTS — SECTION A-A

The difference between the outside dimension of sleeve and inside dimension of pipe rail must not exceed 0.167" before galvanizing. Minimum wall thickness of sleeve is 0.120".

PIPE SPLICE DETAILS

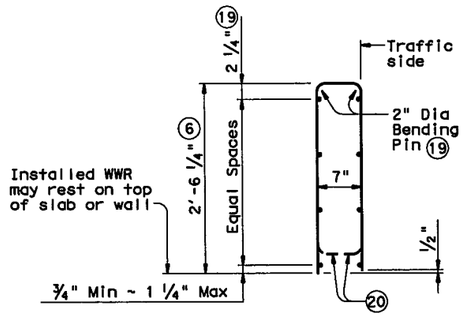

OPTIONAL WELDED WIRE REINFORCEMENT (WWR)

DESCRIPTION	LONGITUDINAL WIRES	VERTICAL WIRES
Minimum (Cumulative Total) Wire Area	1.067 Sq In.	0.267 Sq In. per Ft
	No. of Wires	Spacing
Minimum	8	4"
Maximum	10	8"
Maximum Wire Size Differential	The smaller wire must have an area of 40% or more of the larger wire.	

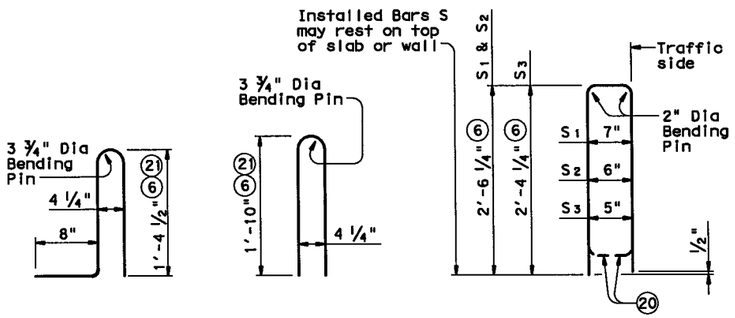

BARS U (#4) BARS WU (#4) BARS S (#4)

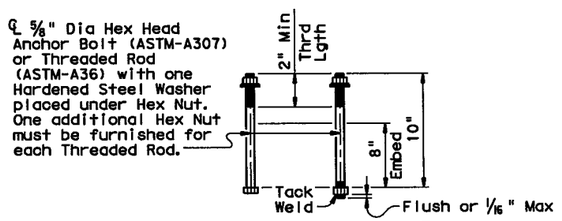

CAST-IN-PLACE (22) ANCHOR BOLT OPTIONS

(6) Increase 2" for structures with overlay.

(10) 2 1/2" Std Pipe (2.875" O.D. 0.203" wall thickness)

(18) Shop drawings for approval required for tubular steel sections.

(19) No longitudinal wires may be in top center of cage.

(20) Bend or cut as required to clear drain slots.

(21) For raised sidewalks, add sidewalk height to total bar height. Use sidewalk height at rail's location.

(22) See "Material Notes" for anchor bolt information.

CONSTRUCTION NOTES:

This railing may be constructed with slip-forms when approved by the Engineer, with equipment approved by the Engineer and when epoxy adhesive anchor bolts are used. Slip-forming parapet is not allowed if anchor bolts are cast with parapet wall. Sensor control for both line and grade must be provided. Tack welding to provide bracing for slip-form operations is acceptable. Welding can be performed at a minimum spacing of 3 ft between the cage and the anchorage. It is permissible to weld to U, WU and S bars at any location on the cage. If increased bracing is needed, additional anchorage devices must be added and welding must be performed in the upper two thirds of the cage.

Face of rail, parapet must be plumb unless otherwise approved by the Engineer. Pipe rail posts must be square to the top of parapet. Use epoxy mortar under post base plates if gaps larger than 1/16" exist.

Exposed edges of pipe rail and pipe rail posts must be rounded or chamfered to approximately 1/16" by grinding.

At the contractor's option anchor bolts may be cast with the parapet (See Cast-in-Place Anchor Bolt Options).

Pipe rail sections must not include less than two posts, and no more than four (except at Abutment

Chamfer all parapet exposed corners.

MATERIAL NOTES:

All steel components except reinforcing must be galvanized unless otherwise shown on plans.

Use Class "C" concrete. Use Class "C" (HPC) if required elsewhere.

All reinforcing must be Grade 60.

Epoxy coat all rail reinforcement if slab bars are epoxy coated.

Deformed welded wire reinforcement (WWR) may be used as an option to conventional reinforcement and must be made in accordance with ASTM A497 (Deformed Wire). Combinations of Reinforcing Steel and WWR or configurations of WWR other than shown will be permitted when the conditions in the table are satisfied.

Pipe for pipe rail must conform to ASTM A53 Grade B or A500 Grade B.

Anchor bolts must be 5/8" Dia ASTM A36 fully threaded rods with one hex nut and one hardened steel washer at each bolt. Embed threaded rods into parapet wall with a Type III Class C epoxy anchorage system. Minimum embedment depth is 3". Anchorage system chosen must be able to achieve an ultimate tensile resistance of 8.4 kips per bolt. The Contractor must provide evidence to the Engineer that this can be achieved. Evidence of adequate tensile resistance can be based on the manufacturer's published values of ultimate tensile strength (anchor spacing and edge distance must be accounted for). Anchor installation, including hole size, drilling, and clean-out, must be in accordance with the manufacturer's instructions.

Optional cast-in-place anchor bolts must be 5/8" Dia ASTM A307 Grade A bolts (or A36 threaded rods with one tack welded hex nut each) with one hex nut and one hardened steel washer at each bolt.

GENERAL NOTES:

This rail, without the pipe rail, has been evaluated and accepted to be of equal strength to railings with like geometry, which have been crash tested to meet NCHRP Report 350 TL-4 criteria. However, its use is limited to design speeds of 45 mph or less due to the presence of the pipe rail.

This railing cannot be used on bridges with expansion joints providing more than 5" movement.

Rail anchorage details shown on this standard may require modification for select structure types. See appropriate details elsewhere in plans for these modifications.

Erection drawings showing panel lengths, rail post spacing, and anchor bolt setting must be submitted to the Engineer for approval.

Average weight of railing with no overlay: 370 plf (Conc)
10 plf (Steel)

SHEET 3 OF 3

Texas Department of Transportation
Bridge Division

COMBINATION RAIL

TYPE C221

FILE: rlstd018.dgn	DN: TxDOT	CK: TxDOT	DW: JTR	CK: JMH
©TxDOT April 2009	DISTRICT	FEDERAL AID PROJECT		SHEET
REVISIONS 05-11: Wall Joint Note.	FTW	(SEE TITLE SHEET)		1790
	COUNTY	CONTROL	SECT	JOB	HIGHWAY
	TARRANT	14	16	255	IH 35W

ACC:
LEVELS DISPLAYED
1

DISCLAIMER:
The use of this standard is governed by the "Texas Engineering Practice Act". No warranty of any kind is made by TxDOT for any purpose whatsoever. TxDOT assumes no responsibility for the conversion of this standard to other formats or for incorrect results or damages resulting from its use.

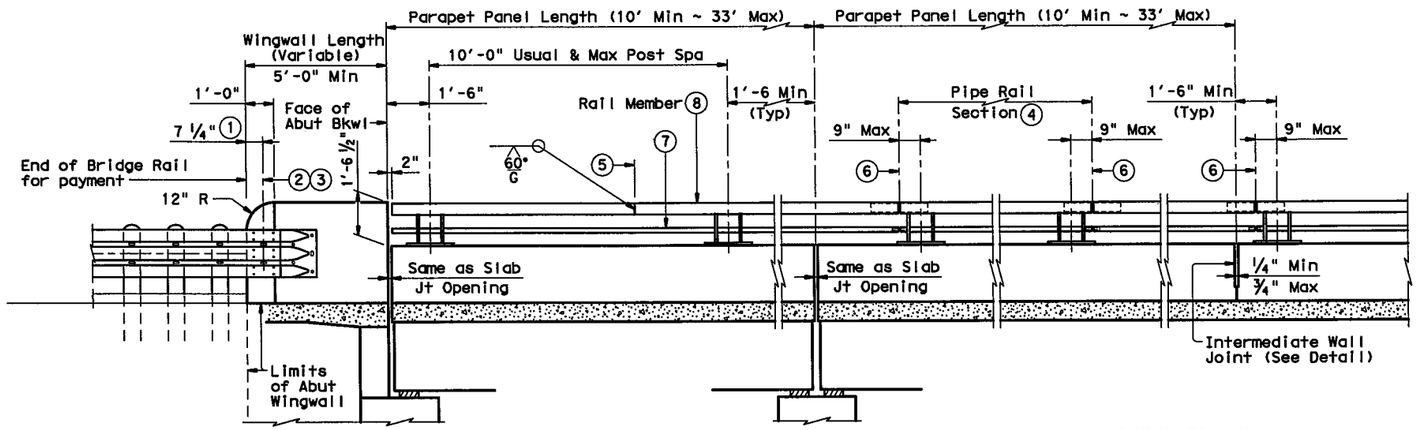

AT ABUTMENT BENTS
Showing TL-3 Transition

AT SLAB EXP JOINTS

AT INTERMEDIATE WALL JOINTS

ROADWAY ELEVATION OF RAIL

(Rail Member showing Elliptical Tube Option, Rectangular Tube Option similar).

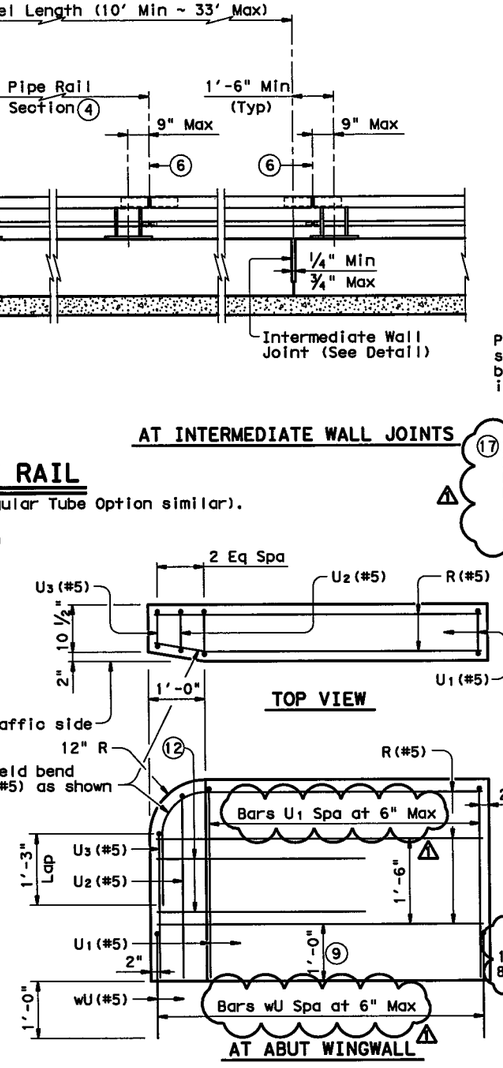

INTERMEDIATE WALL JOINT DETAIL

(Showing without raised sidewalk)
Provide at all interior bents without slab expansion joints. Space equally in between at 33' Max, 10' Min. Location independent of rail member splices.

⚠ (17) For NB FRONTAGE RD OVER BIG FOSSIL CK and SB FRONTAGE RD OVER BIG FOSSIL CK, sidewalk is built in two construction phases. See bridge detail sheets for more information.

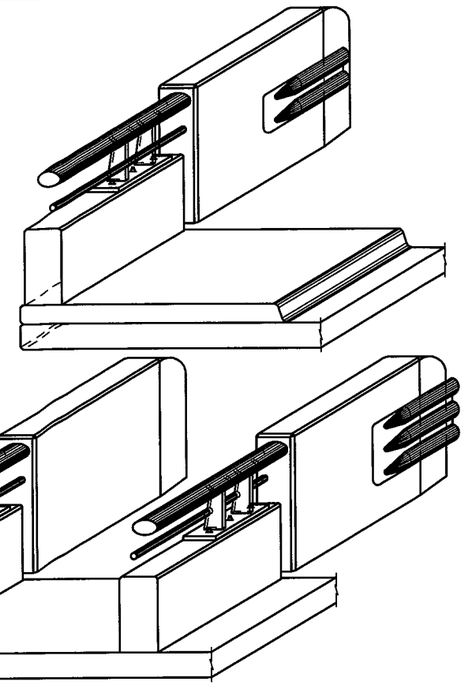

ISOMETRIC VIEWS AT END OF BRIDGE

(Rail Member showing Elliptical Tube Option, Rectangular Tube Option similar).

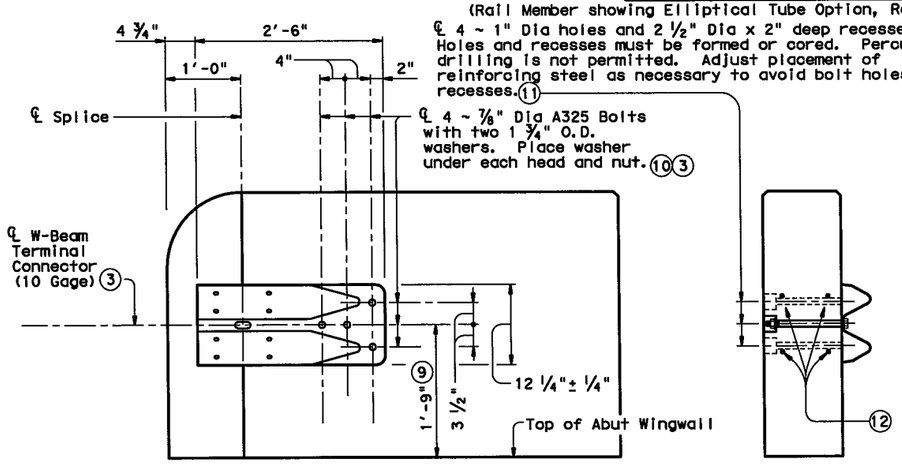

ELEVATION SECTION

TL-2 TERMINAL CONNECTION DETAILS

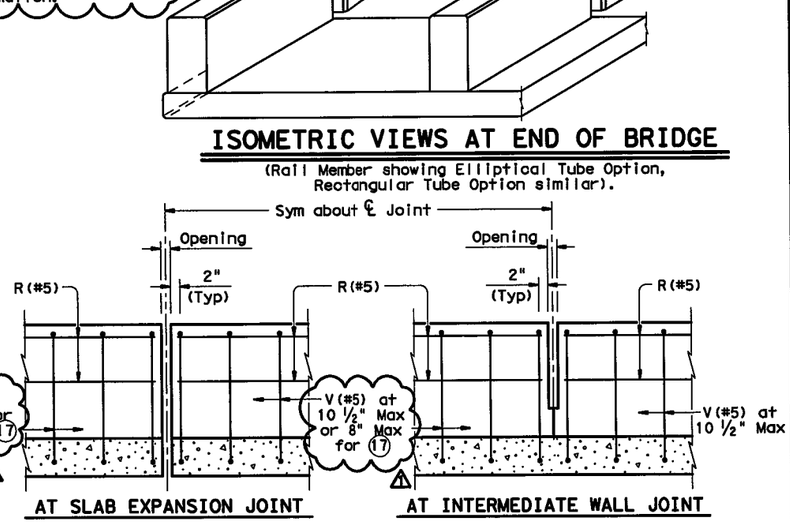

ELEVATION SHOWING TYPICAL REINFORCING PLACEMENT

(Showing without raised sidewalk)

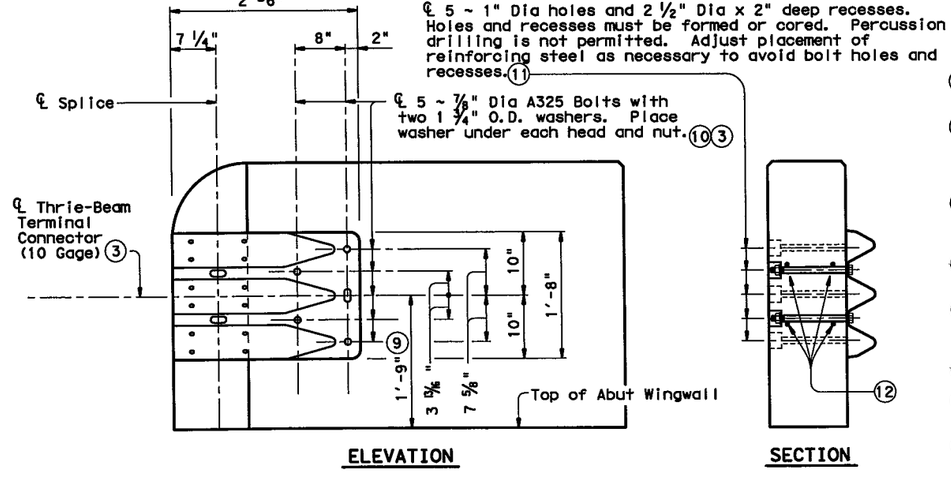

ELEVATION SECTION

TL-3 TERMINAL CONNECTION DETAILS

(1) Showing TL-3 Splice location, TL-2 Splice location is 1'-0".

(2) ℄ Splice ~ Metal Beam Guard Fence Transitions must be attached to the bridge rail and extended along the embankment unless otherwise shown in the plans.

(3) Terminal Connectors and associated hardware are to be paid for under the Item "Metal Beam Guard Fence".

(4) Pipe rail sections must have at least two posts but not more than four.

(5) One shop splice per pipe rail section is permitted with minimum 85 percent penetration. The weld may be square groove or single vee groove. Grind smooth.

(6) ℄ Exp Jt or Splice Jt as required.

(7) 2" Dia Std Pipe (2.375" O.D., 0.154" wall thickness) ASTM-A53 Gr B or A500 Gr B. Placed on sidewalk side of rail.

(8) Unless directed otherwise by the Engineer, the fabricator may use the rectangular tube in lieu of the elliptical tube for the rail member.

(9) Increase 2" for structures with overlay.

(10) Bolts must be of sufficient length to extend 1/2" to 3/4" beyond nut.

(11) Bolt recesses are only required when pedestrian sidewalks are adjacent to back of rail.

(12) 4 additional Bars R(#5) 3'-8" in length shall be placed inside Bars U(#5) and centered 2'-0" from end of rail when Terminal Connections are required. Field bend as needed.

⚠ MODIFIED SECTIONS THRU RAIL WITH RAISED SIDEWALK ON SHEETS 1 AND 2 OF 4 AND BAR BENDING DIAGRAMS ON SHEET 4 OF 4.

STATE OF TEXAS
NESTOR R. RUBIANO
94294
LICENSED PROFESSIONAL ENGINEER

7/06/2012

TBPE REGISTRATION NO. F-1475

SHEET 1 OF 4

Texas Department of Transportation
Bridge Division

COMBINATION RAIL

TYPE C402 (MOD)

FILE: rlstd020.dgn	DN: TxDOT	CK: TxDOT	DW: JTR	CK: JMH	
©TxDOT April 2009	DISTRICT	FEDERAL AID PROJECT			SHEET
REVISIONS	FTW	(SEE TITLE SHEET)			1791
05-11: Notes and Wall Joint Note.	COUNTY		CONTROL	SECT	JOB	HIGHWAY
	TARRANT		14	16	255	IH 35W

ACC:
LEVELS DISPLAYED
1

DISCLAIMER:
The use of this standard is governed by the "Texas Engineering Practice Act". No warranty of any kind is made by TxDOT for any purpose whatsoever. TxDOT assumes no responsibility for the conversion of this standard to other formats or for incorrect results or damages resulting from its use.

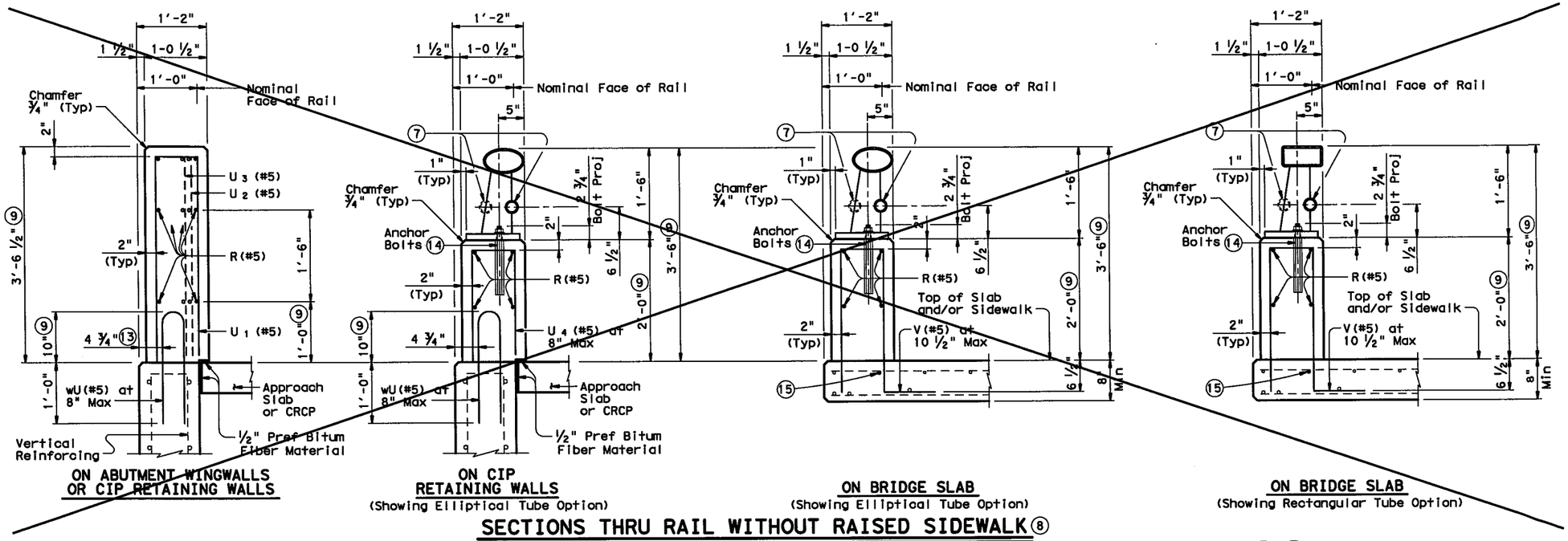

ON ABUTMENT WINGWALLS OR CIP RETAINING WALLS

ON CIP RETAINING WALLS
(Showing Elliptical Tube Option)

ON BRIDGE SLAB
(Showing Elliptical Tube Option)

ON BRIDGE SLAB
(Showing Rectangular Tube Option)

SECTIONS THRU RAIL WITHOUT RAISED SIDEWALK ⑧

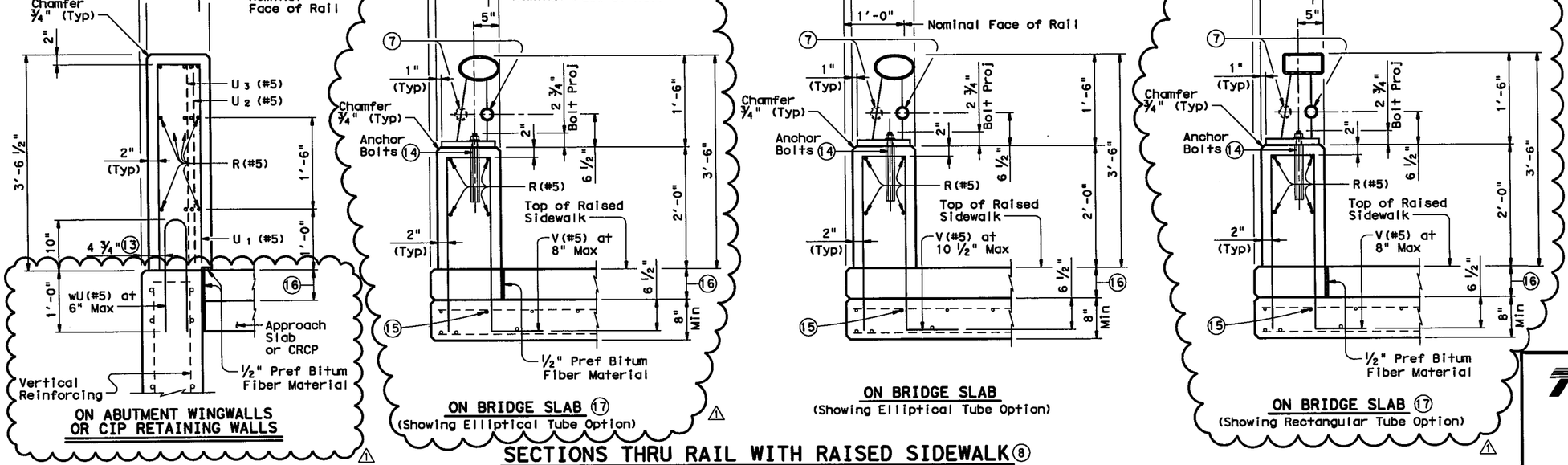

ON ABUTMENT WINGWALLS OR CIP RETAINING WALLS

ON BRIDGE SLAB ⑰ ⚠
(Showing Elliptical Tube Option)

ON BRIDGE SLAB
(Showing Elliptical Tube Option)

ON BRIDGE SLAB ⑰
(Showing Rectangular Tube Option)

SECTIONS THRU RAIL WITH RAISED SIDEWALK ⑧

⑦ 2" Dia Std Pipe (2.375" O.D., 0.154" wall thickness) ASTM-A53 Gr B or A500 Gr B. Placed on sidewalk side of rail.

⑧ Unless directed otherwise by the Engineer, the fabricator may use the rectangular tube in lieu of the elliptical tube for the rail member.

⑨ Increase 2" for structures with overlay.

⑬ 5 ½" when vertical reinforcing has closer clear cover over horizontal reinforcing in abutment wingwalls or retaining walls on traffic side of wall.

⑭ See "Material Notes" for anchor bolt information.

⑮ Top longitudinal slab bar may be adjusted laterally 3" plus or minus to tie reinforcing.

⑯ Raised Sidewalk

⑰ For NB FRONTAGE RD OVER BIG FOSSIL CK and SB FRONTAGE RD OVER BIG FOSSIL CK only. Sidewalk is built in two construction phases. See bridge detail sheets for more information. ⚠

STATE OF TEXAS
NESTOR R. RUBIANO
94294
LICENSED
PROFESSIONAL ENGINEER

7/06/2012

TBPE REGISTRATION NO. F-1475

⚠ MODIFIED SECTIONS THRU RAIL WITH RAISED SIDEWALK ON SHEETS 1 AND 2 OF 4 AND BAR BENDING DIAGRAMS ON SHEET 4 OF 4.

Texas Department of Transportation
Bridge Division

COMBINATION RAIL

TYPE C402(MOD)

FILE: rlstd020.dgn	DN: TxDOT	CK: TxDOT	DW: JTR	CK: JMH
©TxDOT April 2009	DISTRICT	FEDERAL AID PROJECT		SHEET
REVISIONS	FTW	(SEE TITLE SHEET)		1792
05-11: Notes and Wall Joint Note.	COUNTY	CONTROL	SECT	JOB	HIGHWAY
	TARRANT	14	16	255	IH 35W

ACC:
LEVELS DISPLAYED
1

DISCLAIMER:
The use of this standard is governed by the "Texas Engineering Practice Act". No warranty of any kind is made by TxDOT for any purpose whatsoever. TxDOT assumes no responsibility for the conversion of this standard to other formats or for incorrect results or damages resulting from its use.

ACC:

LEVELS DISPLAYED

1

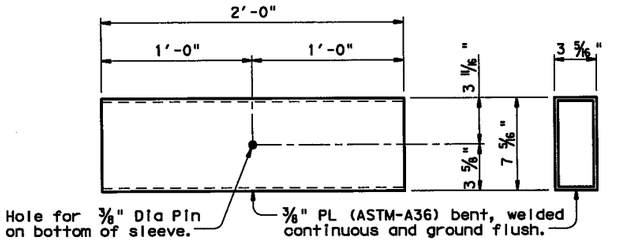

PLAN END VIEW

RECTANGULAR TUBE SLEEVE MEMBER DETAIL

(See Tube Fabrication Detail)

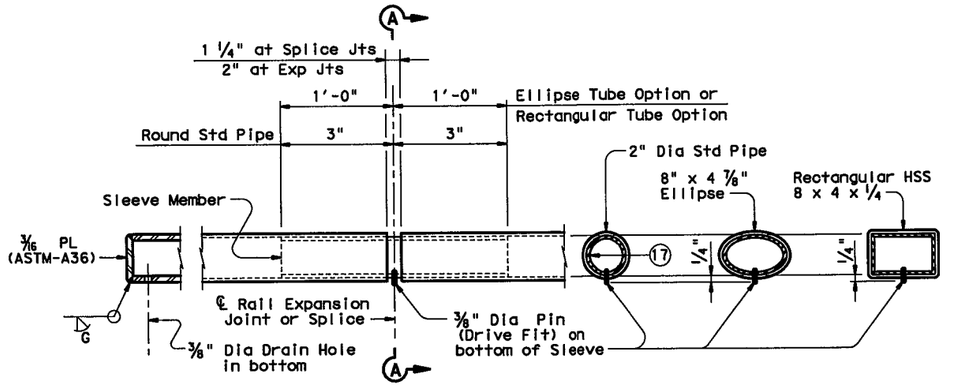

AT RAIL ENDS | AT SPLICE OR EXP JTS | SECTION A-A (Showing Round Std Pipe) | SECTION A-A (Showing Ellipse Tube Option) | SECTION A-A (Showing Rectangular Tube Option)

TUBE FABRICATION DETAILS (8)

ELLIPTICAL TUBE & ELLIPTICAL SLEEVE MEMBER		
8" x 4 7/8" Ellipse	Elliptical Sleeve Member	
Material	Material	Thickness
6" Dia Std Pipe ASTM-A53 E or S Gr B)	ASTM-A53 Gr B	0.353"
	A36 or A500 Gr B	0.339"
	API-5LX52	0.224"
6 5/8" O.D. Pipe x 0.188" API-5LX52	ASTM-A53 Gr B	0.339"
	A36 or A500 Gr B	0.325"
	API-5LX52	0.188"

Notes: Other sections of equal or greater strength are acceptable for elliptical sleeves. The major and minor diameters of the rail member may vary +/- 0.1875" from plan dimension. However, the difference between the outside diameters of the elliptical sleeve and the inside diameters of the rail member must not exceed 0.25 inches.

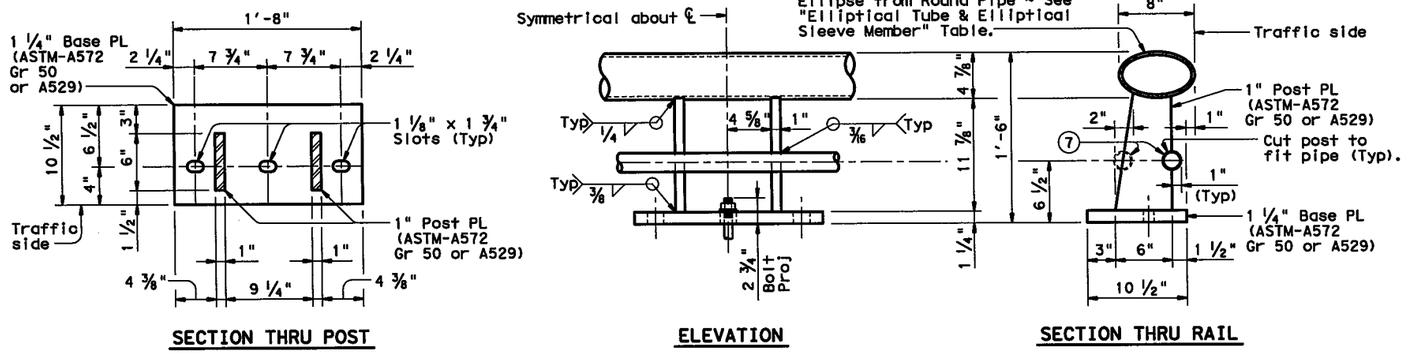

SECTION THRU POST | ELEVATION | SECTION THRU RAIL

ELLIPTICAL TUBE WITH RAIL POST & ANCHORAGE DETAILS

(Showing Elliptical Tube Option)

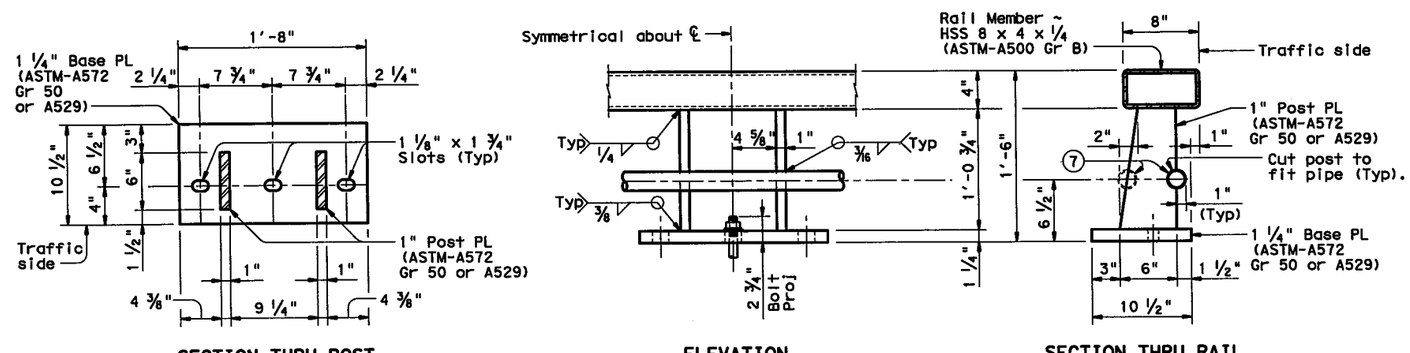

SECTION THRU POST | ELEVATION | SECTION THRU RAIL

RECTANGULAR TUBE WITH RAIL POST & ANCHORAGE DETAILS (8)

(Showing Rectangular Tube Option)

(7) 2" Dia Std Pipe (2.375" O.D., 0.154" wall thickness) ASTM-A53 Gr B or A500 Gr B. Placed on sidewalk side of rail.

(8) Unless directed otherwise by the Engineer, the fabricator may use the rectangular tube in lieu of the elliptical tube for the rail member.

(17) Sleeve Member 1 1/2" Dia Std Pipe (1.90" O.D., 0.145" wall thickness) ASTM-A53 Gr B or A500 Gr B.

⚠ MODIFIED SECTIONS THRU RAIL WITH RAISED SIDEWALK ON SHEETS 1 AND 2 OF 4 AND BAR BENDING DIAGRAMS ON SHEET 4 OF 4.

STATE OF TEXAS
NESTOR R. RUBIANO
94294
LICENSED PROFESSIONAL ENGINEER

7/06/2012

TBPE REGISTRATION NO. F-1475

Texas Department of Transportation
Bridge Division

COMBINATION RAIL

TYPE C402 (MOD)

FILE: rlstd020.dgn	DN: TxDOT	CK: TxDOT	DW: JTR	CK: JMH	
©TxDOT April 2009	DISTRICT	FEDERAL AID PROJECT			SHEET
REVISIONS	FTW	(SEE TITLE SHEET)			1793
05-11: Notes and Wall Joint Note.	COUNTY		CONTROL	SECT	JOB	HIGHWAY
	TARRANT		14	16	255	IH 35W

DISCLAIMER:
The use of this standard is governed by the "Texas Engineering Practice Act". No warranty of any kind is made by TxDOT for any purpose whatsoever. TxDOT assumes no responsibility for conversion of this standard to other formats or for incorrect results or damages resulting from its use.

LEVELS DISPLAYED

ACC:

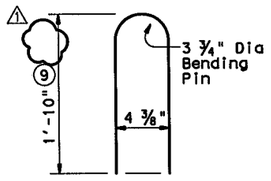

BARS wU(#5)

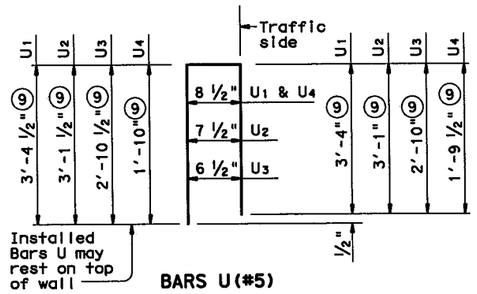

BARS U(#5)

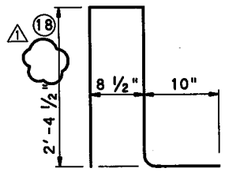

BARS V(#5)

⑨ Increase 2" for structures with overlay.

⑭ See "Material Notes" for anchor bolt information.

⑱ For raised sidewalks, add sidewalk height to total bar height. Use sidewalk height at rail's location.

⑲ Slots are not allowed in areas where there is a joint in the concrete parapet between rail post.

⑳ Shop drawings for approval required for tubular steel sections.

RAIL DATA FOR HORIZONTAL CURVES

	RADIUS TO FACE OF RAIL	MAX CHORD LENGTH	CONSTRUCT OR FABRICATE
Rail Members	Over 2800'	29'-0"	Straight rail sections
	Over 1400' thru 2800'	14'-6"	To required radius ⑳ or to chords shown
	Over 700' thru 1400'	7'-3"	
	Thru 700'	Zero	To required radius ⑳

CONSTRUCTION NOTES:

This rail may be slip-formed if approved by the Engineer when epoxy adhesive anchor bolts are used.

Cap all open ends of tubular steel sections.

At the contractor's option anchor bolts may be cast with the parapet (See Cast-in-Place Anchor Bolt Options).

Slip-forming parapet is not allowed if anchor bolts are cast with parapet wall.

Rail parapet must be plumb unless otherwise approved by the Engineer. Steel posts must be square to the top of parapet. Use epoxy mortar under post base plates if gaps larger than 1/16" exist.

Pipe rail sections must have at least two posts but not more than four.

Round or chamfer all exposed edges of steel components 1/16" by grinding prior to galvanizing.

MATERIAL NOTES:

Galvanize all steel components except reinforcing steel.

Anchor bolts must be ⅞" Dia ASTM A193 Grade B7 fully threaded rods with heavy hex nuts, one hardened washer and one (2 ¼" OD) washer each. Embed threaded rods into parapet wall with a Type III Class C epoxy anchorage system. Minimum embedment depth is 8". Anchorage system chosen must be able to achieve an ultimate tensile resistance of 34 kips per bolt. The Contractor must provide evidence to the Engineer that this can be achieved. Evidence of adequate tensile resistance can be based on the manufacturer's published values of ultimate tensile strength (anchor spacing and edge distance must be accounted for). Anchor installation, including hole size, drilling, and clean-out, must be in accordance with the manufacturer's instructions.

Optional cast-in-place anchor bolts must be ⅞" Dia ASTM A325 or A449 bolts (or A193 Gr B7 threaded rods with one tack welded heavy hex nut each) with one heavy hex nut and one hardened steel washer plus one 2 ¼" O.D. steel washer at each bolt. Nuts must conform to A563 requirements.

Use Class "C" concrete. Use Class "C" (HPC) if required elsewhere. Chamfer all exposed corners.

Reinforcing steel must be Grade 60.

Epoxy coat all rail reinforcement if slab bars are epoxy coated.

GENERAL NOTES:

This rail has been evaluated and accepted to be of equal strength to railings with like geometry, which have been crash tested to meet NCHRP Report 350 TL-3 criteria. This rail can be used for design speeds of 50 mph and greater when a TL-3 rated guard fence transition is used. When a TL-2 rated guard fence transition is used, this rail can only be used for design speeds of 45 mph and less.

This railing cannot be used on bridges with expansion joints providing more than 5" movement.

Rail anchorage details shown on this standard may require modification for select structure types. See appropriate details elsewhere in plans for these modifications.

Erection drawings showing panel lengths, rail post spacing, and anchor bolt setting must be submitted to the Engineer for approval.

Average weight of railing with no overlay: 347 plf total
313 plf (Conc)
34 plf (Steel).

⚠ MODIFIED SECTIONS THRU RAIL WITH RAISED SIDEWALK ON SHEETS 1 AND 2 OF 4 AND BAR BENDING DIAGRAMS ON SHEET 4 OF 4.

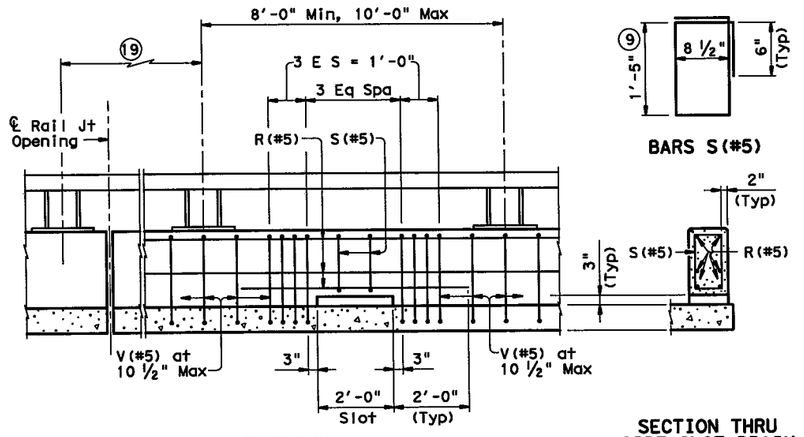

ELEVATION

BARS S(#5)

SECTION THRU SIDE SLOT DRAIN

OPTIONAL SIDE SLOT DRAIN DETAILS

Note: Side Slot Drains must be centered between rail posts within the limits shown. Side Slot Drains may be used where shown elsewhere on the plans or as directed by the Engineer. Drains should not be placed over railroad tracks, lower roadways, or sidewalks. When this rail is used as a separator between a roadway surface and a sidewalk surface, side drain slots will not be permitted.

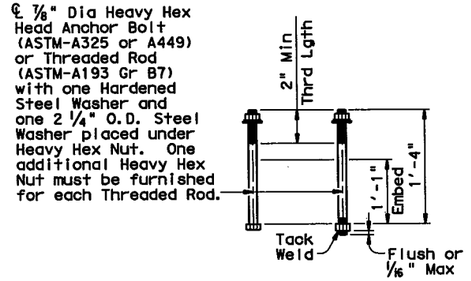

CAST-IN-PLACE ANCHOR BOLT OPTIONS ⑭

STATE OF TEXAS
NESTOR R. RUBIANO
94294
LICENSED PROFESSIONAL ENGINEER

7/06/2012

TBPE REGISTRATION NO. F-1475

SHEET 4 OF 4

Texas Department of Transportation
Bridge Division

COMBINATION RAIL

TYPE C402(MOD)

FILE: ristd020.dgn	DN: TxDOT	CK: TxDOT	DW: JTR	CK: JMH	
©TxDOT April 2009	DISTRICT	FEDERAL AID PROJECT			SHEET
REVISIONS	FTW	(SEE TITLE SHEET)			1794
05-11: Notes and Wall Joint Note.	COUNTY		CONTROL	SECT	JOB	HIGHWAY
	TARRANT		14	16	255	IH 35W

DISCLAIMER:
The use of this standard is governed by the "Texas Engineering Practice Act". No warranty of any kind is made by TxDOT for any purpose whatsoever. TxDOT assumes no responsibility for the conversion of this standard to other formats or for incorrect results or damages resulting from its use.

PATH:

LEVELS DISPLAYED

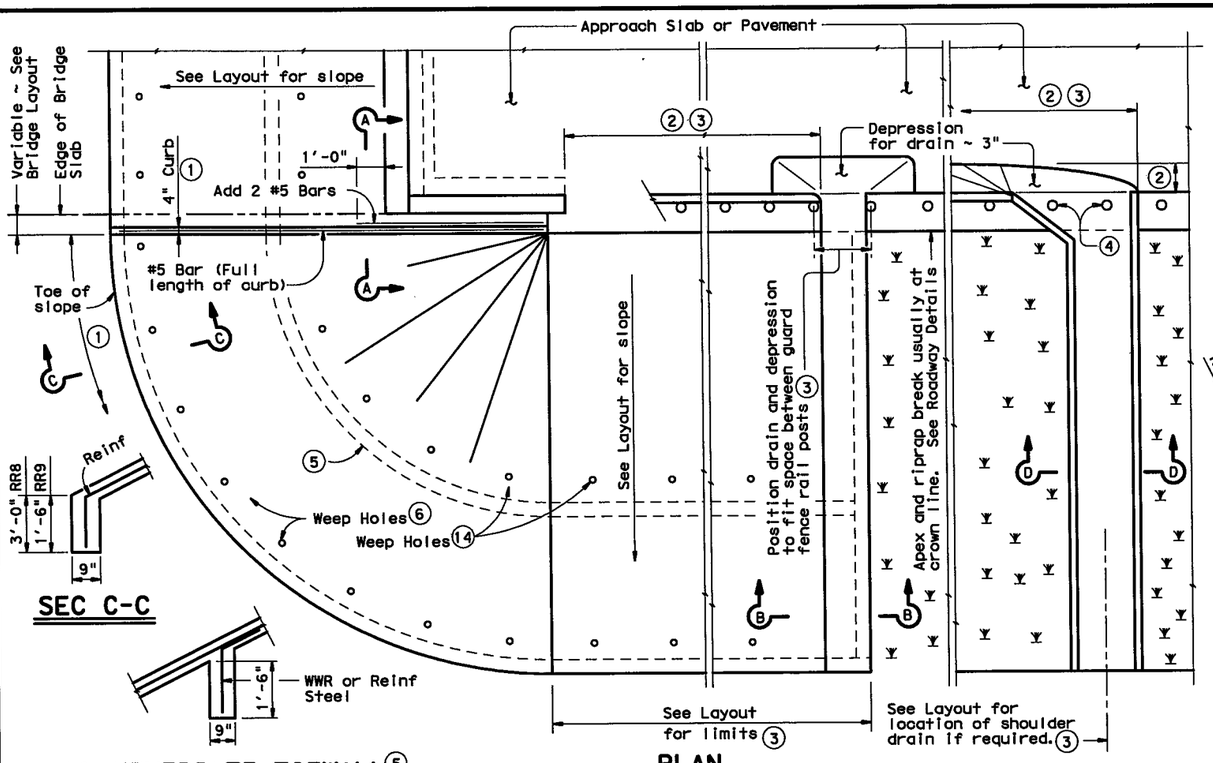

PLAN

SEC C-C

INTERMEDIATE TOEWALL (5)

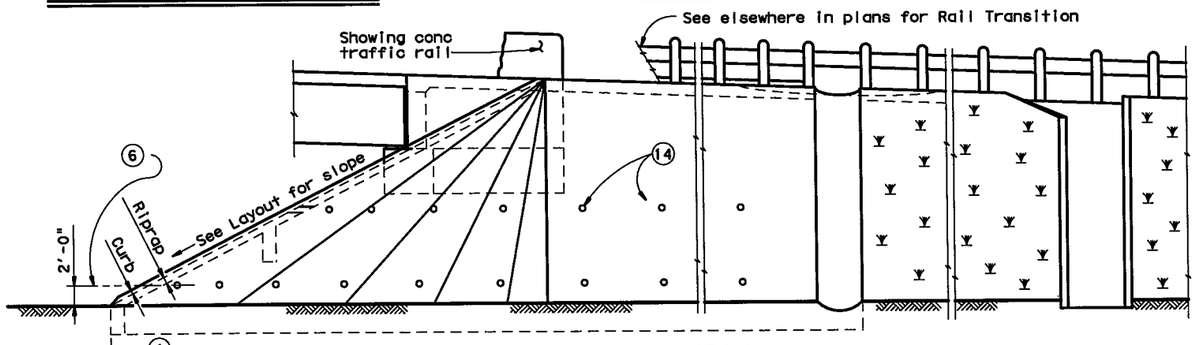

ELEVATION

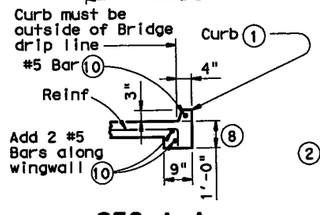

SEC A-A

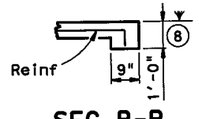

SEC B-B
(No Drain)

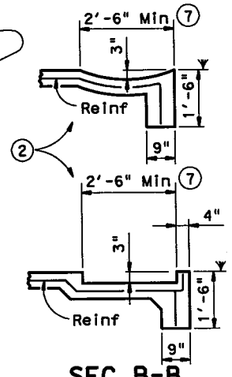

SEC B-B
(Shoulder Drain integral with riprap)

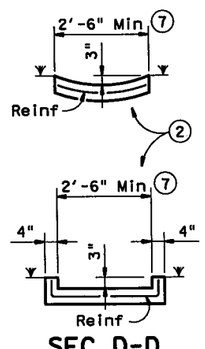

SEC D-D
(Shoulder Drain)

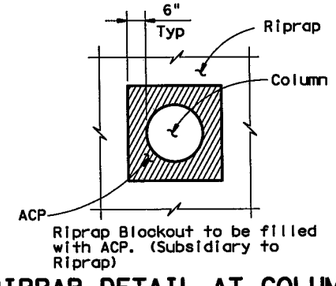

RIPRAP DETAIL AT COLUMNS
(As directed by the Engineer)

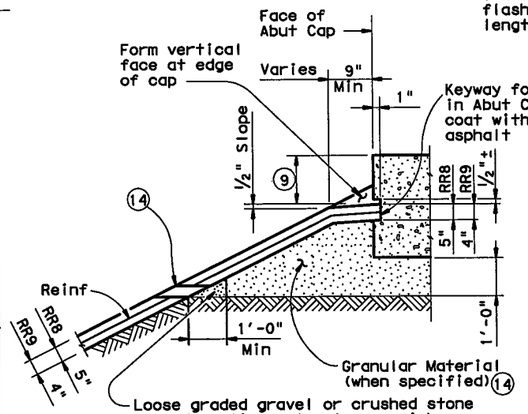

SHOWING KEYWAY OPTION

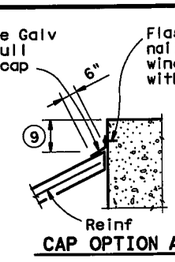

CAP OPTION A

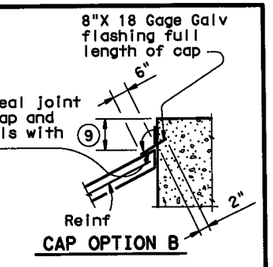

CAP OPTION B

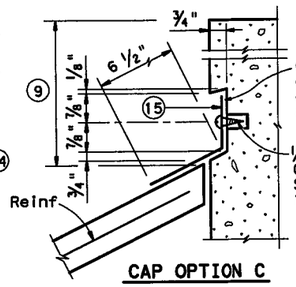

CAP OPTION C

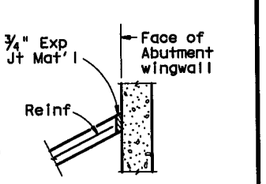

SECT THRU RIPRAP AT WINGWALL (12)

SECTIONS THRU RIPRAP AT CAP (11)

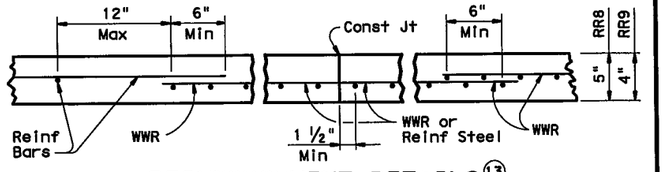

REINFORCEMENT DETAILS (13)

See General Notes for optional sythetic fiber reinforcement.

GENERAL NOTES:

Concrete shall be Class "B" with a minimum compressive strength of 2,000 psi unless noted elsewhere in plans.

All reinforcing steel shall be Grade 60.

Synthetic fibers listed on the "Fibers for Concrete" Material Producer List (MPL) may be used in lieu of steel reinforcing in riprap concrete unless noted otherwise.

Construction joints or grooved joints extending the full slant slope height shall be at intervals of approximately 20 feet unless otherwise directed by the Engineer.

Hardware cloth, loose graded stone behind weep holes, flashing, or other sealing material shall not be paid for directly but shall be subsidiary to the bid item "Riprap".

Unless specified elsewhere in the plans to be only reinforcing bars, the riprap reinforcing may be composed of reinforcing bars, Welded Wire Reinforcement (WWR), or any suitable combination of both types.

See Layout for limits of riprap.

RR8 is to be used on stream crossings.

RR9 is to be used on other embankments.

(1) When riprap is shown extended around header on layout, extend slab and toewall as shown and eliminate 4" curb.

(2) Limits and configuration of drains and depressions shall be as shown elsewhere in plans or as directed by the Engineer.

(3) Location of shoulder drain must consider limitations imposed by rail transition. Do not locate shoulder drains at expansion joints between approach slab and concrete pavement.

(4) See details elsewhere in plans for installation of guard fence posts through concrete riprap.

(5) Provide Intermediate toewall only when designated elsewhere in the plans or included in the specifications.

(6) Provide lower level of 2" Dia weep holes at 10' c-c backed by 1 CF packet of gravel and galvanized hardware cloth at all locations unless directed by the Engineer to eliminate.

(7) Wider or other drain configurations shall be used if shown elsewhere in plans or if directed by the Engineer.

(8) Wall extension may be reduced or modified if approved by the Engineer. Wall extension shall be increased to 1'-6" whenever the optional intermediate toewall is called for in the plans.

(9) Top of cap to top of riprap dimension varies as directed by the Engineer. Should be 9" Min for beam/slab type bridges and 1'-6" for slab span, box beam, or slab beam bridges.

(10) #5 bars shown are required even when synthetic fiber reinforcing option is selected.

(11) The sealing option of the joint between the face of cap and riprap shall be as designated by the Engineer or as shown elsewhere on plans.

(12) Flashing (shown in Cap Option A) may be used at wingwall in addition to Exp Jt Mat'l if shown on plans or directed by the Engineer.

(13) Reinforcing bars shall be #3 at 18" Spa c-c. Welded Wire Reinforcement (WWR) shall be 6X6-W2.9XW2.9. Combinations of WWR and reinforcing bars may be used if both are permitted. Lap splices shall be a minimum of 6 inches, measured from the transverse wire of WWR, and the ends of reinforcing bars.

(14) If granular material is specified, provide upper level of 2" Dia weep holes at 10' c-c backed by galvanized hardware cloth.

(15) 8" x 18 Gage Galv Sheet Metal

FOR CONTRACTOR'S INFORMATION ONLY:
5" of RR8 = 0.015 CY/SF
4" of RR9 = 0.012 CY/SF
#3 Reinf at 18" c-c = 0.501 Lbs/SF
6X6-W2.9XW2.9 = 0.394 Lbs/SF

Texas Department of Transportation
Bridge Division

CONCRETE RIPRAP AND SHOULDER DRAINS EMBANKMENTS AT BRIDGE ENDS (TYPES RR8 & RR9)

CRR

FILE: crrstdel.dgn	DN: TxDOT	CK: TxDOT	DW: TxDOT	CK: TxDOT
©TxDOT April 2006	DISTRICT	FEDERAL AID PROJECT		SHEET
REVISIONS 08-07: Revised Note 6, removed "H" reference, added Note 14 & changed weep hole size & spacing. 04-11: Added fiber reinforcement.	FTW	(SEE TITLE SHEET)		1795
	COUNTY	CONTROL	SECT	JOB	HIGHWAY
	TARRANT	14	16	255	IH 35W

DISCLAIMER:
The use of this standard is governed by the "Texas Engineering Practice Act". No warranty of any kind is made by TxDOT for any purpose whatsoever. TxDOT assumes no responsibility for the conversion of this standard to other formats or for incorrect results or damages resulting from its use.

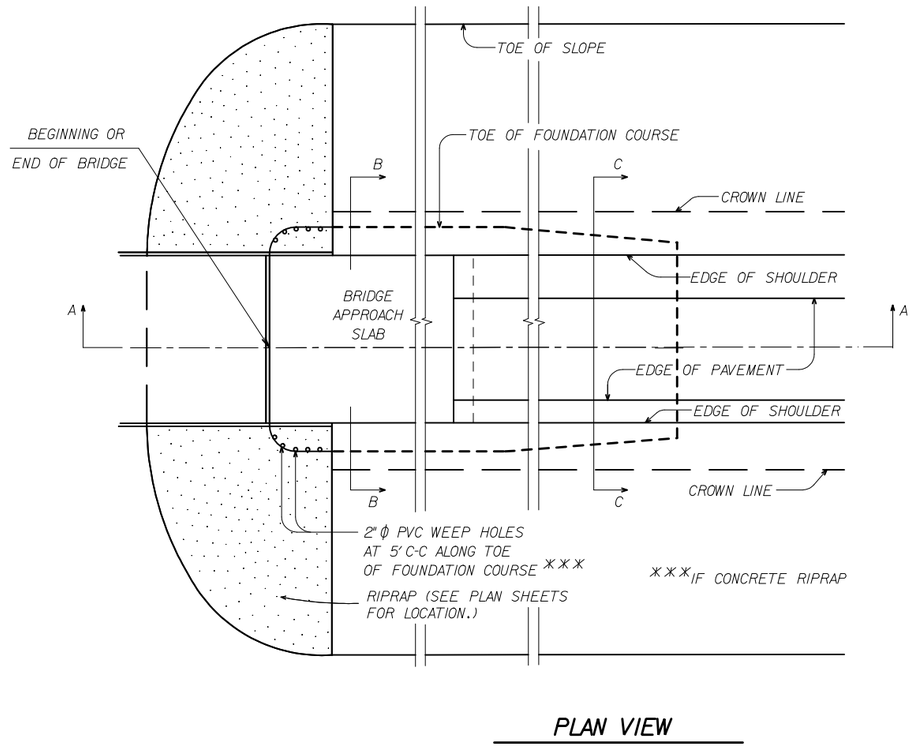

PLAN VIEW

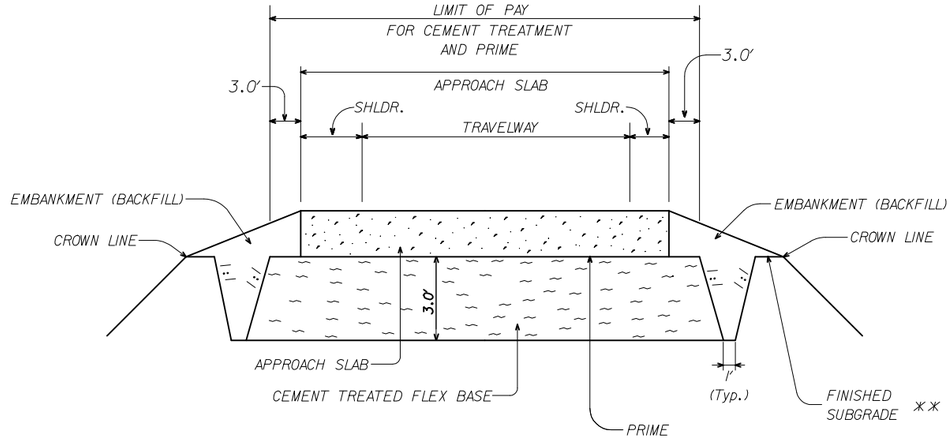

SECTION "B-B"

** CONSTRUCT BRIDGE EMBANKMENT TO FINISHED SUBGRADE LINE, THEN EXCAVATE FOR CONSTRUCTION OF BRIDGE ABUTMENT AND CEMENT TREATED FLEX BASE. EXCAVATION FOR ABUTMENT AND CEMENT TREATED FLEX BASE WILL NOT BE PAID FOR DIRECTLY, BUT WILL BE CONSIDERED SUBSIDIARY TO THE VARIOUS BID ITEMS

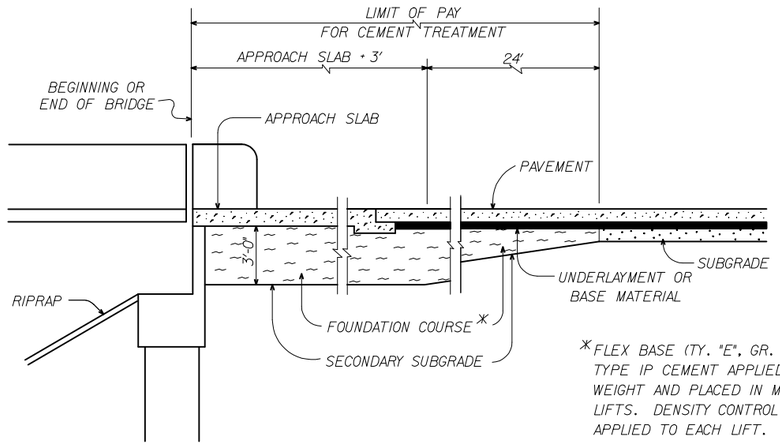

SECTION "A-A"

* FLEX BASE (TY. "E", GR. 4), TREATED WITH TYPE IP CEMENT APPLIED AT 2.4% BY WEIGHT AND PLACED IN MAXIMUM 9 INCH LIFTS. DENSITY CONTROL SHALL BE APPLIED TO EACH LIFT.

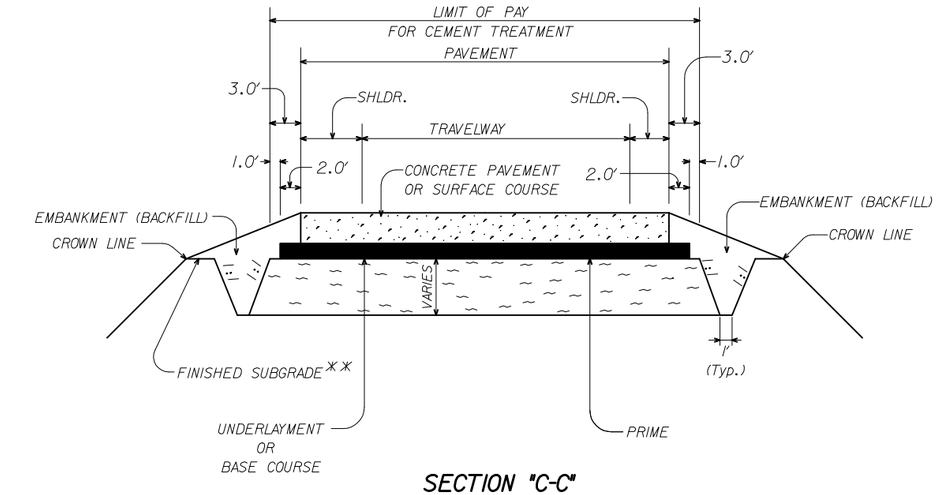

SECTION "C-C"

TYPICAL TREATMENT AT BRIDGE ENDS

Texas Department of Transportation
Fort Worth District

BRIDGE ABUTMENT TREATMENT CEMENT-TREATED FLEX BASE

BAT-CTFB-08 (FW)

ORIG DRAW APR 2008	FED.RD. DIV.NO.	PROJECT NO.		SHEET NO.
REVISIONS:	6	(SEE TITLE SHEET)		1796
	STATE	STATE DIST. NO.	COUNTY	
	TEXAS	FTW	TARRANT	
	CONT.	SECT.	JOB	HIGHWAY NO.
	0014	16	255	IH 35W

© 2008 by Texas Department of Transportation; all rights reserved

batchtbfw.dgn
http://www.dot.state.tx.us/ftw/specinfo/standard.htm
LEVELS DISPLAYED

DISCLAIMER:
The use of this standard is governed by the "Texas Engineering Practice Act". No warranty of any kind is made by TxDOT for any purpose whatsoever. TxDOT assumes no responsibility for the conversion of this standard to other formats or for incorrect results or damages resulting from its use.

DATE:
FILE:

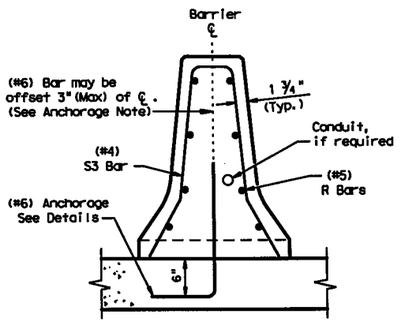

END VIEW

Cast-in-Place (CIP) Barrier

Barrier is Symmetrical About the Center Line

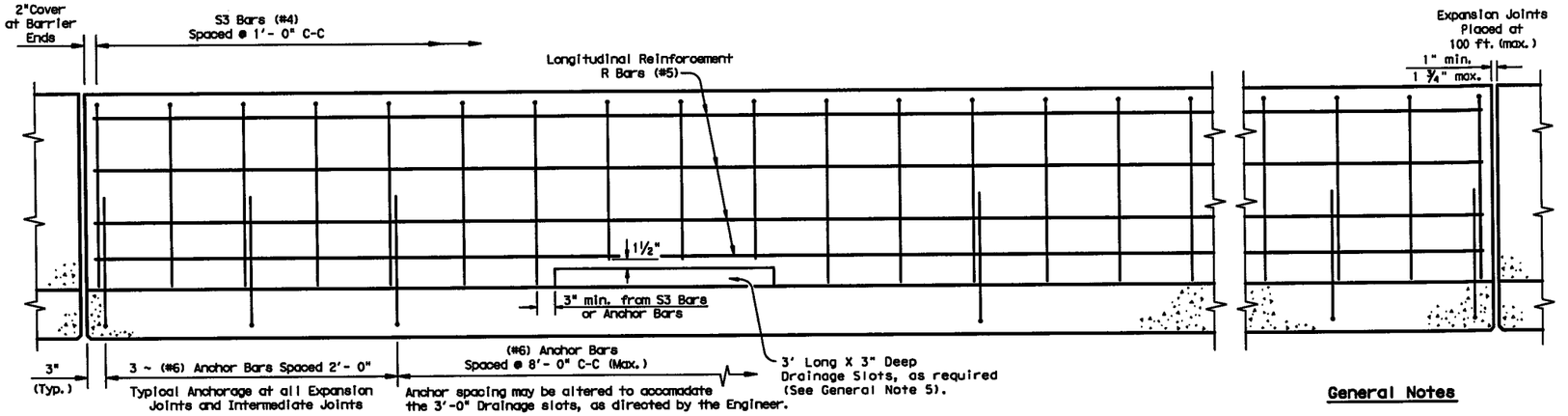

ELEVATION VIEW

Cast-in-Place (CSB) on Bridge Decks or Continuously Reinforced Concrete Pavement (CRCP) (Showing Reinforcement and Anchor Requirement)

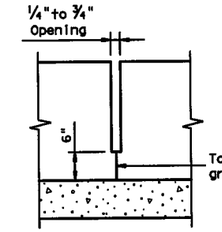

BRIDGE INTERMEDIATE JOINT DETAIL

Place at all Bent ℄'s, without Exp. Joints and spaced at 33 ft. (max.), 10 ft. (min.)

CRCP EXPANSION JOINT PLACEMENT

Place at all transverse joints or 100 ft. (max.), 10 ft. (min.)

General Notes

1. Concrete shall be Class C, unless otherwise specified in the plans.
2. Where used, rebar reinforcement shall be Grade 60 and conform to ASTM A615. If the bridge deck requires epoxy "coated" reinforcement, the barrier and/or anchorage may require the same, as shown elsewhere in the plans.
3. Axis of cast-in-place barrier shall be vertical, except where the roadway is superelevated, then axis shall be normal to roadway surface.
4. Top edges of cast-in-place barrier shall have a ¾" chamfer or tooled radius.
5. Anchorage: The "Optional" Epoxy Anchor system shall be embedded 6" with a Type III, Class C Epoxy anchorage system. Follow the manufacturer's directions for installing the expoxied anchor bars. All anchorage shown is the minimum required, and considered subsidiary to the bid item.
6. Drainage slot depths may be increased 1" to accommodate ACP. Slot locations (12'- 0", C-C Min. Spacing) are shown elsewhere, or as directed by the Engineer.
7. Cast-in-place barrier may be slip formed. Bracing may be tied or tack welded to the reinforcement cage to provide cage stability. Do not weld to anchor bars. The reinforcement cage may rest on the top of the finished grade.
8. For locations where lighting is required, see the CSB(4) sheet for the proper reinforcement and anchorage.

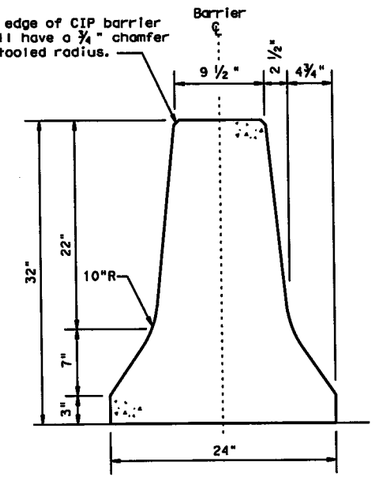

CONCRETE SAFETY BARRIER (CSB)

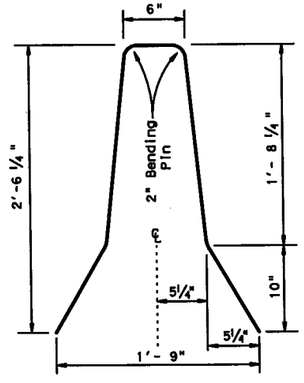

S3 Bar

(#4) Bar

Note:
Reinforcement cage may rest on top of the finished grade.

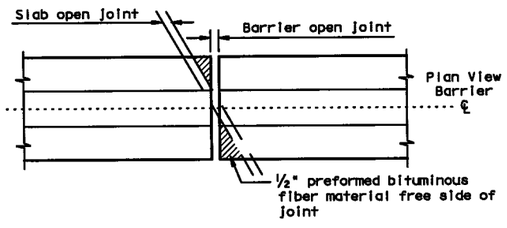

BARRIER OVER TRANSVERSE OPEN JOINT

BARRIER PLACEMENT OVER (CRCP) JOINTS

Barrier may be cast over a "Longitudinal" CRCP joint.

CRCP Joints (with or without tiebars): Two layers of 30# roofing felt or ½" preformed bituminous fiber material.

Barrier Anchorage Note: Anchorage must be located at least 3" from a longitudinal joint.

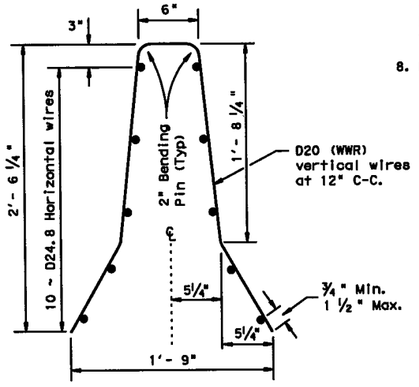

Welded Wire Reinforcement (WWR) Option for Bars S and R

(WWR) General Notes

1. Deformed Welded Wire Reinforcement (WWR) shall conform to ASTM A497.
2. The welded wire cage at the drainage slots may be cut or bent to accommodate the edge and top clearances, as directed by the Engineer.
3. The welded wire splice locations shall have a "minimum" splice lap length of 12".
4. Combinations of reinforcing steel and WWR will be permitted, as directed by the Engineer. The dimension from the end of the barrier section to the first wire shall not exceed 3".

Cast-In-Place or Slip-Formed (CSB)

Cast-in-Place barrier may be connected to precast CSB. Joint connection "Types" may be used in Cast-in-Place barrier, to match the precast barrier connection. (See required connection "Type" elsewhere in the plans)

The weight of Cast-in-Place (CSB) (F-Shape) is approx. 440 lbs per ft.

Standard Anchorage Note:
10" leg may be oriented 90 degrees in any direction about the barrier ℄.

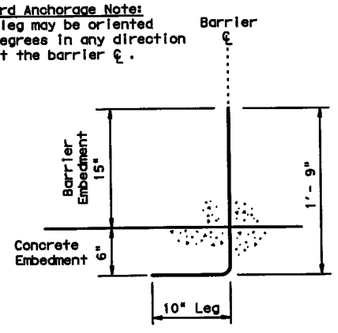

STANDARD ANCHORAGE

(#6) Bar
Concrete Pavement / Bridge Deck Anchorage:
Cast-in-Place or Slip-Formed Barrier
(See General Note 2)

Epoxy Note:
If epoxy coated anchor bars are required, the lower 6" of the bars must not be epoxy coated.

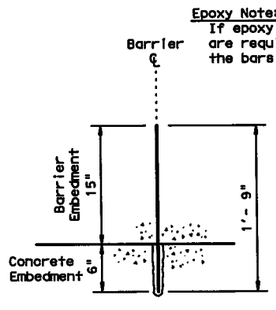

"OPTIONAL" EPOXY ANCHORAGE

(#6) Bar
Type III, Class C Epoxy
Concrete Pavement / Bridge Deck Anchorage:
Cast-in-Place or Slip-Formed Barrier
(See General Notes 2 & 4)

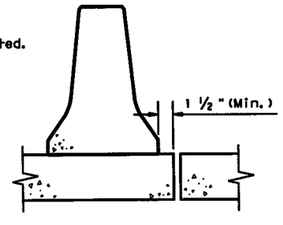

Minimum Edge Distance From Longitudinal Joint

Placement over a longitudinal bridge joint is not recommended.

Texas Department of Transportation
Design Division Standard

CONCRETE SAFETY BARRIER (F-SHAPE)

CAST-IN-PLACE
(TYPE 1)
(BRIDGE DECK or CRCP)

CSB(3)-10

FILE: csb310.dgn	DN: TxDOT	CK: AM	DW: BD	CK:
©TxDOT December 2010	CONT	SECT	JOB	HIGHWAY
REVISIONS	14	16	255	IH 35W
	DIST	COUNTY		SHEET NO.
	FTW	TARRANT		1797

DISCLAIMER:
The use of this standard is governed by the "Texas Engineering Practice Act". No warranty of any kind is made by TxDOT for any purpose whatsoever. TxDOT assumes no responsibility for the conversion of this standard to other formats or for incorrect results or damages resulting from its use.

ACC:

LEVELS DISPLAYED

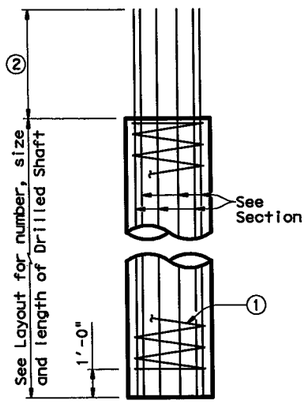

ABUTMENTS, WINGWALLS AND MULTI-DRILLED SHAFT FOOTINGS

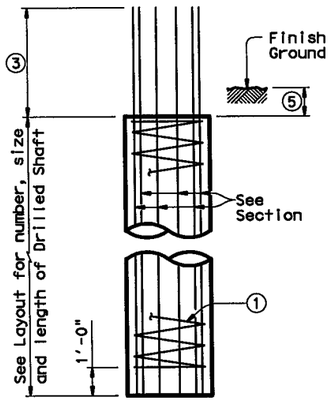

INTERIOR BENTS DRILLED SHAFT DIA EQUAL TO COLUMN DIA

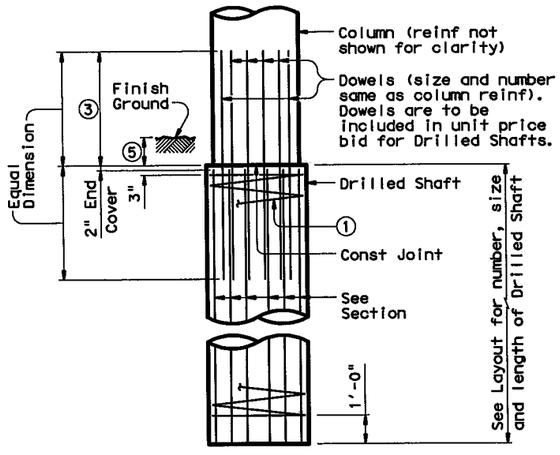

INTERIOR BENTS DRILLED SHAFT DIA GREATER THAN COLUMN DIA

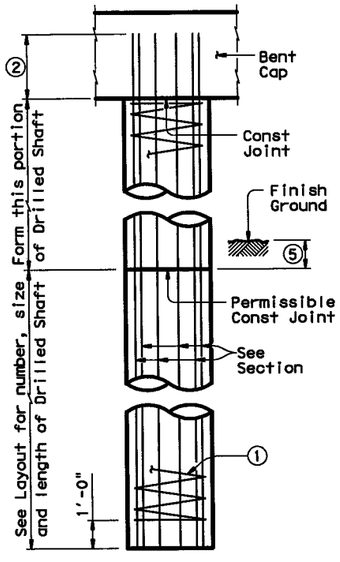

OPTIONAL INTERIOR BENT DRILLED SHAFT DETAIL④

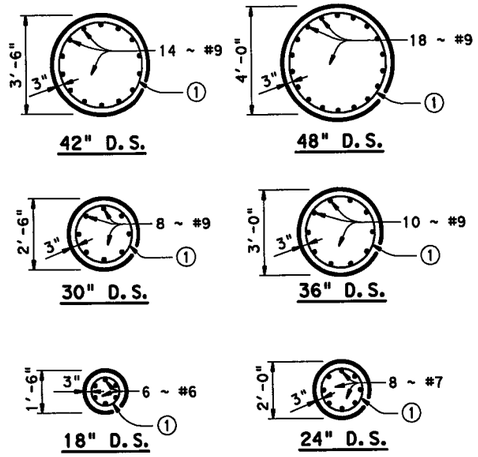

DRILLED SHAFT SECTIONS

DRILLED SHAFT DETAILS

① #3 Spiral at 6" pitch (One flat turn top & bottom)

② Min extension into supported element:
#6 Bars = 1'-0"
#7 Bars = 1'-5"
#9 Bars = 2'-3"

③ Min lap with Column reinf:
#7 Bars = 2'-4"
#9 Bars = 3'-10"

④ If approved by the Engineer, Drilled Shafts may extend to bottom of bent caps for "H" heights of 6 ft or less (as shown on Bridge Layout). This option can only be used when Drilled Shaft Dia equals Column Dia. The forming method shall be submitted for approval prior to construction. No adjustments in payment will be made if this option is used.

⑤ 6" Min at Grade Crossing, 1'-0" Min in Channel.

⑥ Or as shown on plans.

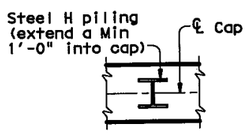

ORIENTATION OF STEEL H PILING

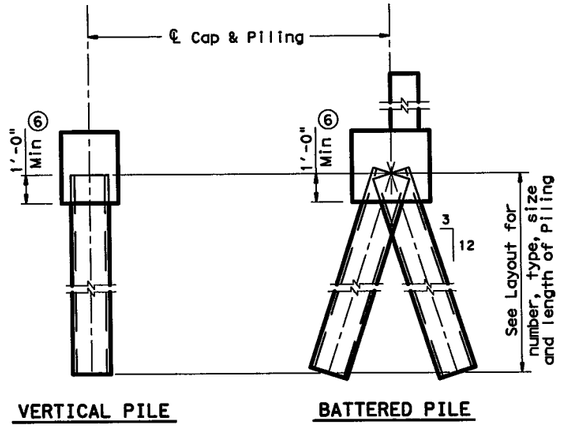

PILING DETAILS
(Concrete or Steel H)

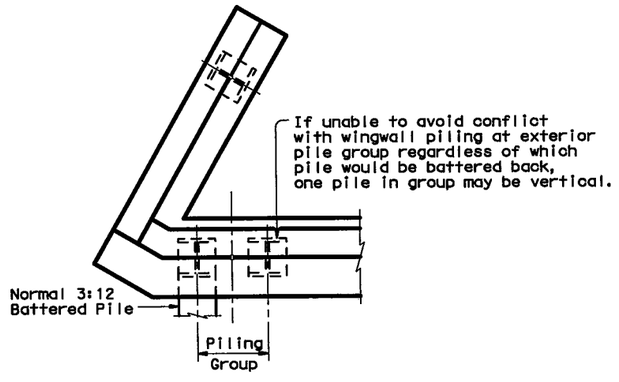

DETAIL "A"
(Showing Plan View of a 30° Skewed Abutment)

SHEET 1 OF 2

Texas Department of Transportation
Bridge Division

COMMON FOUNDATION DETAILS

FD

FILE: fdstde01.dgn	DN: TxDOT	CK: TxDOT	DW: TxDOT	CK: TxDOT
©TxDOT April 2006	DISTRICT	FEDERAL AID PROJECT		SHEET
REVISIONS	FTW	(SEE TITLE SHEET)		1798
	COUNTY	CONTROL	SECT	JOB	HIGHWAY
	TARRANT	14	16	255	IH 35W

DISCLAIMER:
The use of this standard is governed by the "Texas Engineering Practice Act". No warranty of any kind is made by TxDOT for any purpose whatsoever. TxDOT assumes no responsibility for the conversion of this standard to other formats or for incorrect results or damages resulting from its use.

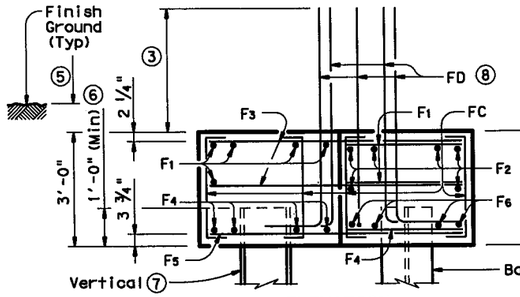

ELEVATION

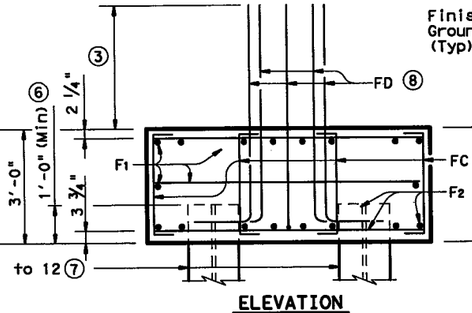

ELEVATION

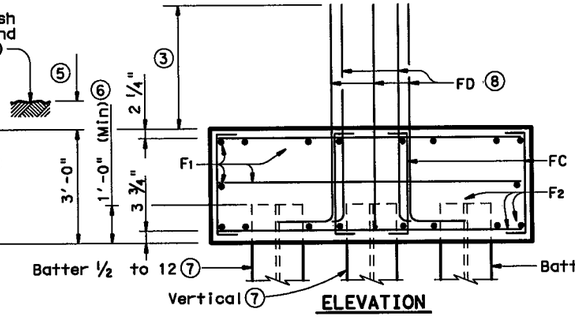

ELEVATION

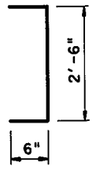

BARS FC

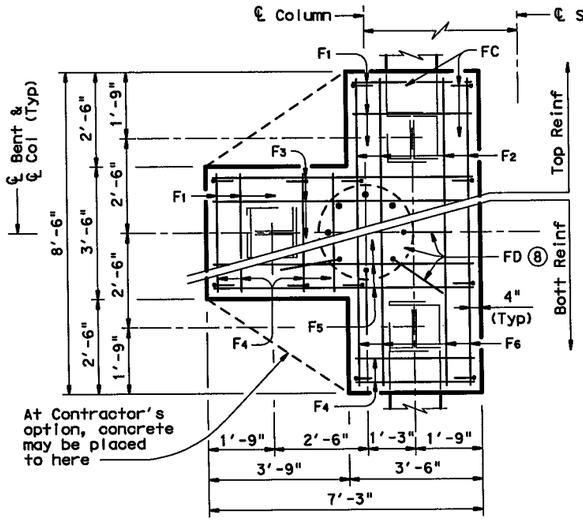

PLAN

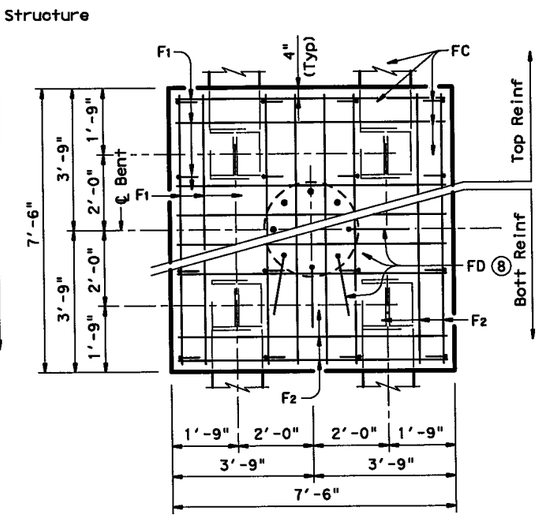

PLAN

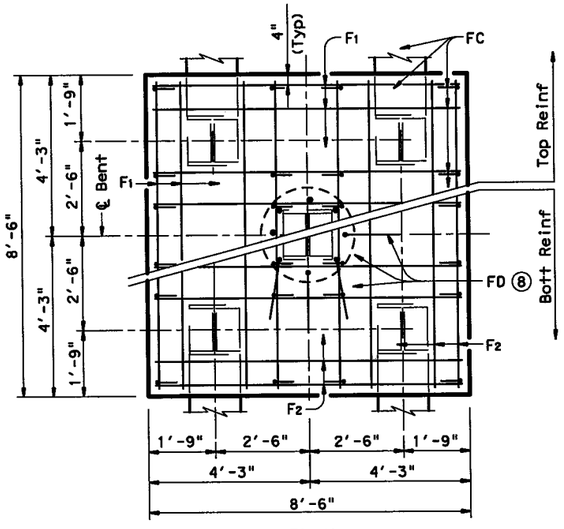

PLAN

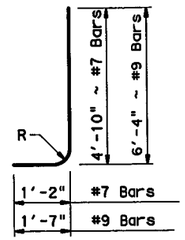

BARS FD ⑧

R = 3 1/4" ~ #7 Bars
and 5 1/4" ~ #9 Bars

THREE PILE FOOTING

FOUR PILE FOOTING

FIVE PILE FOOTING

TABLE OF FOOTING QUANTITIES FOR 30" COLUMNS

ONE 3 PILE FOOTING				
Bar	No.	Size	Length	Weight
F_1	11	#4	3'- 2"	23
F_2	6	#4	8'- 2"	33
F_3	6	#4	6'- 11"	28
F_4	8	#9	3'- 2"	86
F_5	4	#9	6'- 11"	94
F_6	4	#9	8'- 2"	111
FC	12	#4	3'- 6"	28
FD ⑨	8	#9	7'- 11"	215
Reinforcing Steel			Lb	618
Class "C" Concrete			CY	4.8

ONE 4 PILE FOOTING				
Bar	No.	Size	Length	Weight
F_1	20	#4	7'- 2"	96
F_2	16	#8	7'- 2"	306
FC	16	#4	3'- 6"	37
FD ⑨	8	#9	7'- 11"	215
Reinforcing Steel			Lb	654
Class "C" Concrete			CY	6.3

ONE 5 PILE FOOTING				
Bar	No.	Size	Length	Weight
F_1	20	#4	8'- 2"	109
F_2	16	#9	8'- 2"	444
FC	24	#4	3'- 6"	56
FD ⑨	8	#9	7'- 11"	215
Reinforcing Steel			Lb	824
Class "C" Concrete			CY	8.0

③ Min lap with Column reinf:
#7 Bars = 2'-4"
#9 Bars = 3'-10"

⑤ 6" Min at Grade Crossing, 1'-0" Min in Channel.

⑥ Or as shown on plans.

⑦ See Layout for Type, Size and length of Piling.

⑧ Number and size of FD bars must match Column reinforcing. FD bars shall be tied to the top of the bottom mat of reinforcing

⑨ For 24" Columns, use #7 FD bars (6'-0") in place of #9 bars and deduct 116 lbs. For 36" Columns, add 2 FD bars (54 lbs).

GENERAL NOTES:

Designed according to AASHTO LRFD Specifications.

See Bridge Layout of each Structure for Foundation Type to be used.

Drilled shaft details shown are not to be used for retaining wall, noise wall, barrier or sign foundation without structural evaluation.

Footings shown on this standard are not applicable for columns larger than 36" Diameter.

Details shown on this standard to be used unless shown otherwise in the plans.

Maximum Pile Load for the footings shown shall be as follows : 72 Tons/Pile with 24" Dia Column
80 Tons/Pile with 30" Dia Column
100 Tons/Pile with 36" Dia Column

The footings shown on this Standard are not to be used in direct contact with salt water or exposed to salt water spray.

Drilled Shaft reinforcing may be Grade 40.

Piling under abutment wings to be driven to a minimum resistance of 10 Tons.

Texas Department of Transportation
Bridge Division

COMMON FOUNDATION DETAILS

FD

FILE: fdstde01.dgn	DN: TxDOT	CK: TxDOT	DW: TxDOT	CK: TxDOT
©TxDOT April 2006	DISTRICT	FEDERAL AID PROJECT		SHEET
REVISIONS	FTW	(SEE TITLE SHEET)		1799
	COUNTY	CONTROL	SECT	JOB	HIGHWAY
	TARRANT	14	16	255	IH 35W

ACC:
LEVELS DISPLAYED
1

DISCLAIMER:
The use of this standard is governed by the "Texas Engineering Practice Act". No warranty of any kind is made by TxDOT for any purpose whatsoever. TxDOT assumes no responsibility for the conversion of this standard to other formats or for incorrect results or damages resulting from its use.

LEVELS DISPLAYED
PATH:

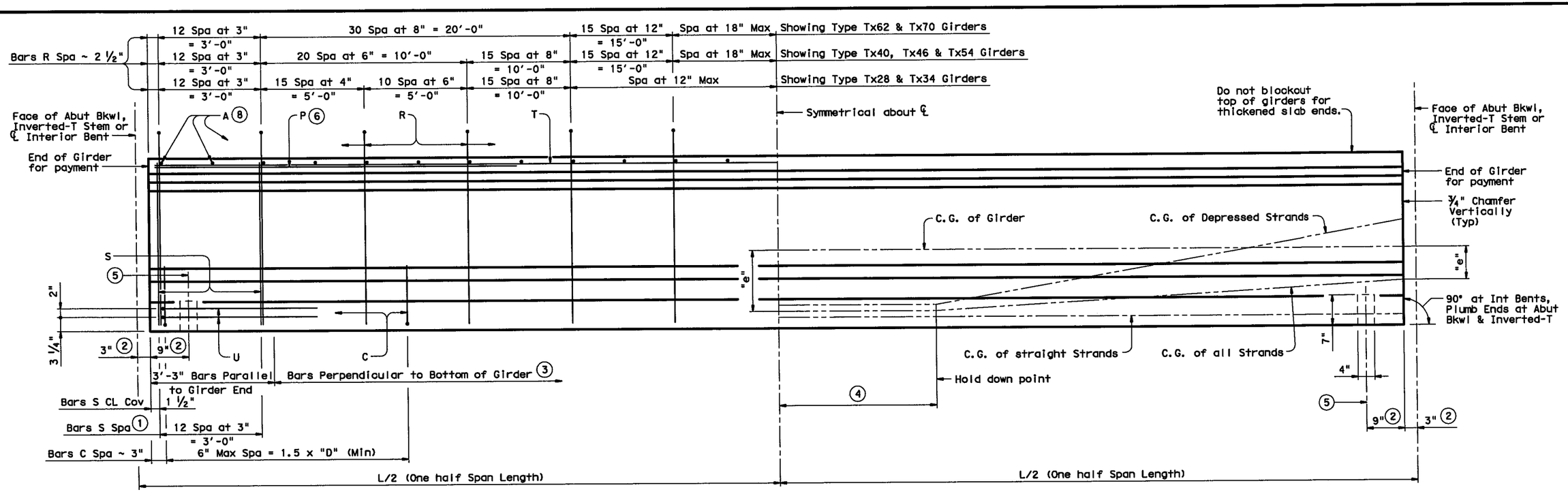

GIRDER ELEVATION

(1) Bundle with Bars R.

(2) Measured along ℄ Girder at Interior Bents; perpendicular to Abutment Bkwl or Inverted-T Stem.

(3) The average of the top and bottom spacing of Bars R cannot exceed the required spacing.

(4) L/20, but not less than 5'-0" (-0, +2').

(5) ℄ 4" x 1 1/2" Vertical Slotted Hole at doweled girder end [labeled (D) on Bridge Layout]. Required for outside girder only or as shown on substructure details. Anchorage holes may be tapered (4 3/4" x 1 5/8") at base. If holes are formed with sheet metal, forms may be left in place.

(6) Bars P (#6 x 15'-0") are only required when "e" at girder ends exceeds 0.25 x "D". At the fabricator's option bars larger than #6 may be used. When L is less than 50 ft, Bars P are to be the same length as Bars T.

(7) 1 3/8" Clear Cover to Bars S.

(8) Space Bars A at 6" Max for girders requiring overhang bracket hangers. Space at 12" Max for all other girders. Tie to Bars R as necessary. See standard IGMS for "Deck Forming Notes".

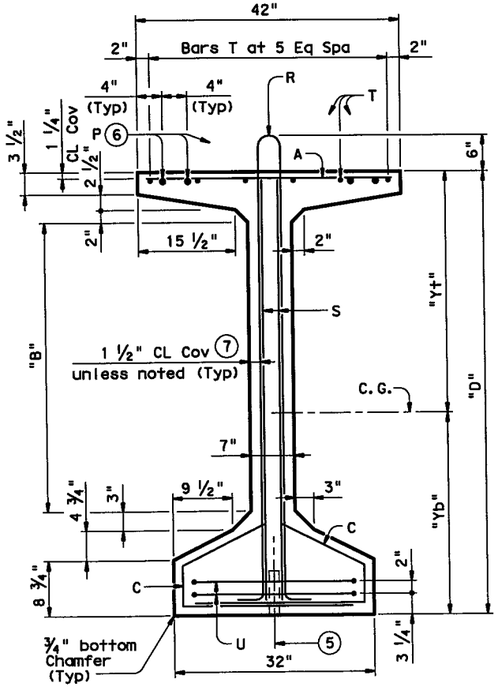

TYPE Tx62 & Tx70

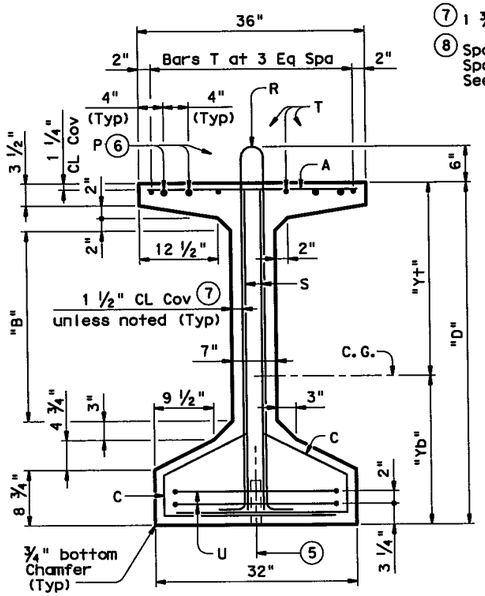

TYPE Tx46 & Tx54

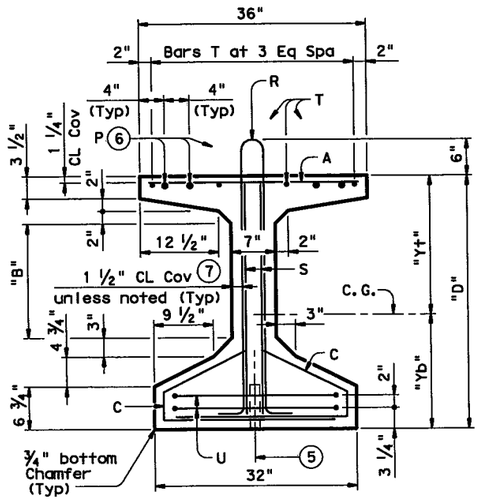

TYPE Tx28, Tx34 & Tx40

GIRDER DIMENSIONS AND SECTION PROPERTIES

Girder Type	"D" (In.)	"B" (In.)	"Yt" (In.)	"Yb" (In.)	Area ($In.^2$)	"Ix" ($In.^4$)	"Iy" ($In.^4$)	Weight (plf)
Tx28	28	6	15.02	12.98	585	52,772	40,559	610
Tx34	34	12	18.49	15.51	627	88,355	40,731	653
Tx40	40	18	21.90	18.10	669	134,990	40,902	697
Tx46	46	22	25.90	20.10	761	198,089	46,478	793
Tx54	54	30	30.49	23.51	817	299,740	46,707	851
Tx62	62	37 1/2"	33.72	28.28	910	463,072	57,351	948
Tx70	70	45 1/2"	38.09	31.91	966	628,747	57,579	1,006

GENERAL NOTES:

Designed in accordance with AASHTO LRFD Specifications.

All concrete must be Class H. Provide Class H(HPC) if shown elsewhere in plans.

All reinforcing bars must be Grade 60.

An equal area of deformed Welded Wire Reinforcement (WWR) (ASTM A497) may be substituted for Bars A, C, R or T unless otherwise noted.

It is permissible for bars or strands to come in contact with materials used in forming anchor holes.

HL93 LOADING

SHEET 1 OF 2

Texas Department of Transportation
Bridge Division

PRESTRESSED CONCRETE I-GIRDER DETAILS

IGD

FILE: igdstdel.dgn	DN: TxDOT	CK: JMH	DW: JTR	CK: JMH
©TxDOT June 2007	DISTRICT	FEDERAL AID PROJECT		SHEET
REVISIONS 02/09 General Notes. 12/10 Optional Top Flange Reinforcing.	FTW	(SEE TITLE SHEET)		1800
	COUNTY	CONTROL	SECT	JOB	HIGHWAY
	TARRANT	14	16	255	IH 35W

DISCLAIMER:
The use of this standard is governed by the "Texas Engineering Practice Act". No warranty of any kind is made by TxDOT for any purpose whatsoever. TxDOT assumes no responsibility for the conversion of this standard to other formats or for incorrect results or damages resulting from its use.

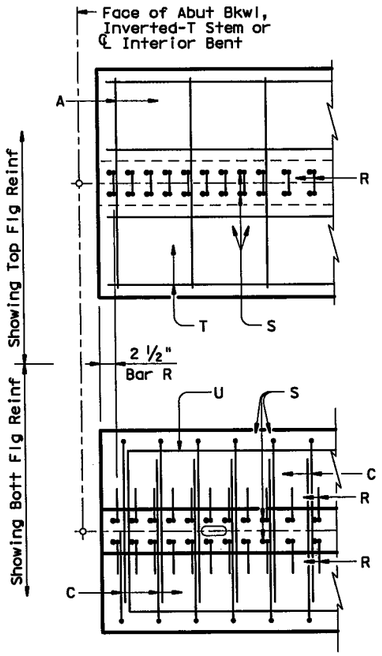

0° SKEW

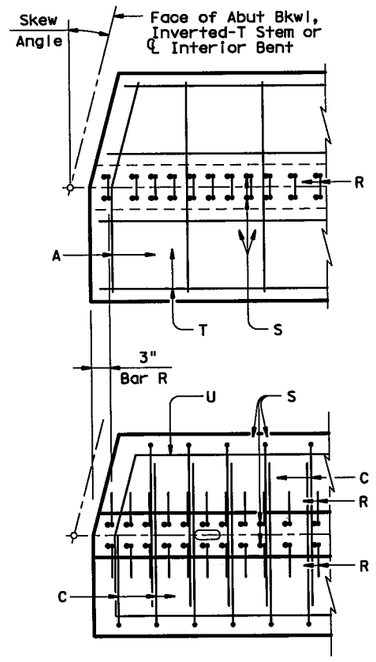

15° SKEW

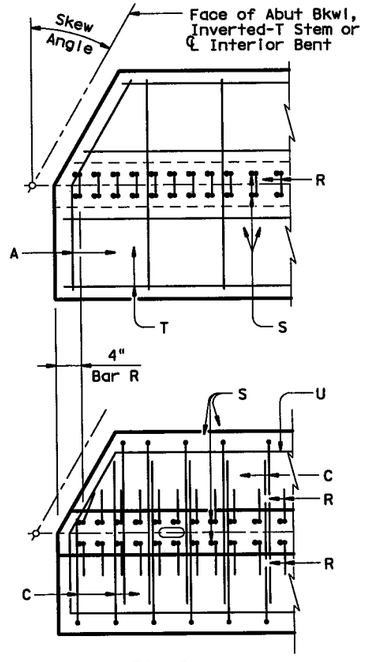

30° SKEW

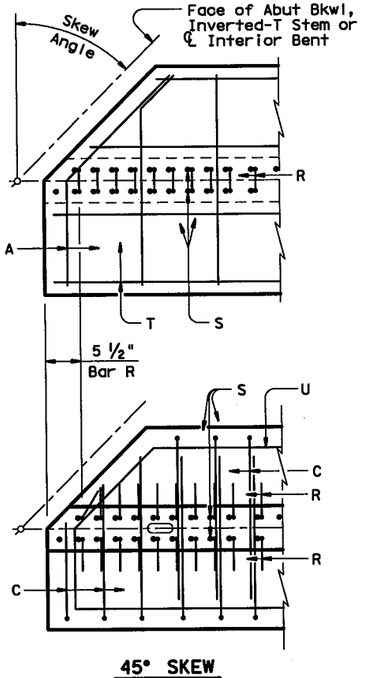

45° SKEW

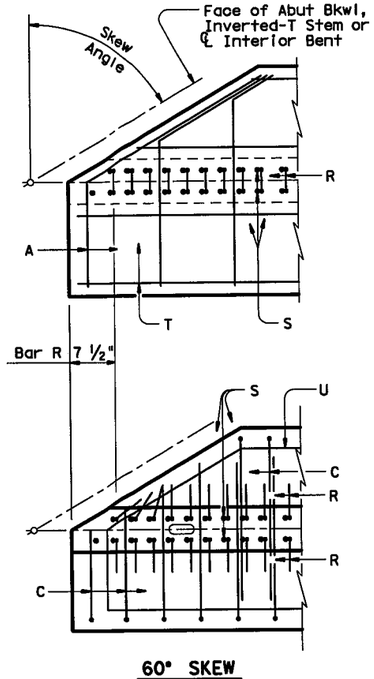

60° SKEW

PLAN OF GIRDER ENDS (9)

To control top flange cracking that may occur during form removal, additional top flange reinforcing may be placed as shown in girder ends at the Fabricator's option.

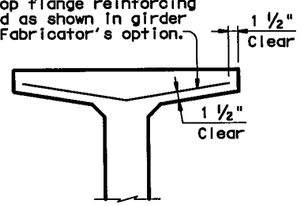

OPTIONAL TOP FLANGE REINFORCING DETAIL

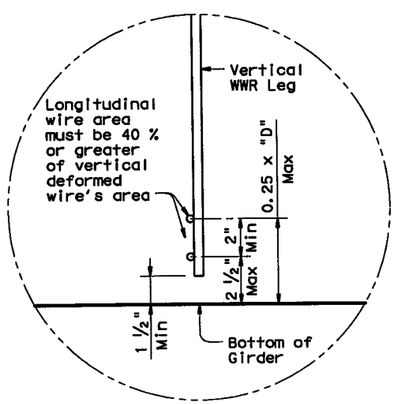

OPTIONAL WELDED WIRE REINFORCEMENT (WWR) DETAIL

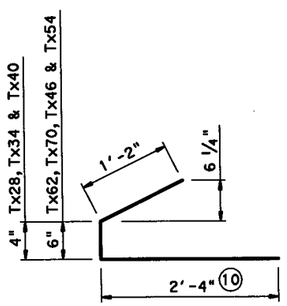

BARS C (#4)

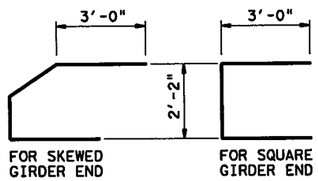

BARS U (#5)

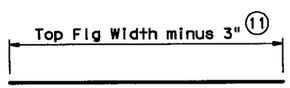

BARS A (#3)

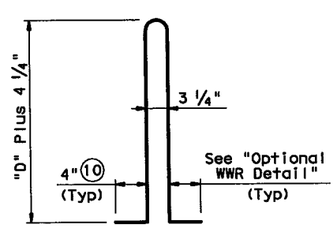

BARS R (#4) (13)

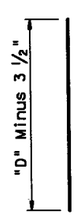

BARS S (#6)

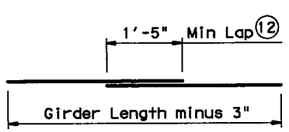

BARS T (#4)

(9) Reinforcing patterns shown are provided as guides to determine reinforcement placement in skewed ends. Place Bars S as close to girder end as cover requirements permit, which may prevent them to be bundled with Bars R.

(10) Bars may be cut or bent at skewed end as required.

(11) Increase as necessary for bars at skewed end.

(12) No portion of bar less than 10 ft.

(13) For Welded Wire Reinforcement (WWR) option, area of Bars R may be reduced in proportion to the increase in reinforcement yield strength over 60 ksi. Yield strength of WWR is limited to 75 ksi.

HL93 LOADING SHEET 2 OF 2

Texas Department of Transportation
Bridge Division

PRESTRESSED CONCRETE I-GIRDER DETAILS

IGD

FILE: igdstdet.dgn	DN: TxDOT	CK: JMH	DW: JTR	CK: JMH		
© TxDOT June 2007	DISTRICT	FEDERAL AID PROJECT				SHEET
REVISIONS 02/09 General Notes. 12/10 Optional Top Flange Reinforcing.	FTW	(SEE TITLE SHEET)				1801
	COUNTY		CONTROL	SECT	JOB	HIGHWAY
	TARRANT		14	16	255	IH 35W

PATH:

LEVELS DISPLAYED

DISCLAIMER:
The use of this standard is governed by the "Texas Engineering Practice Act". No warranty of any kind is made by TxDOT for any purpose whatsoever. TxDOT assumes no responsibility for the conversion of this standard to other formats or for incorrect results or damages resulting from its use.

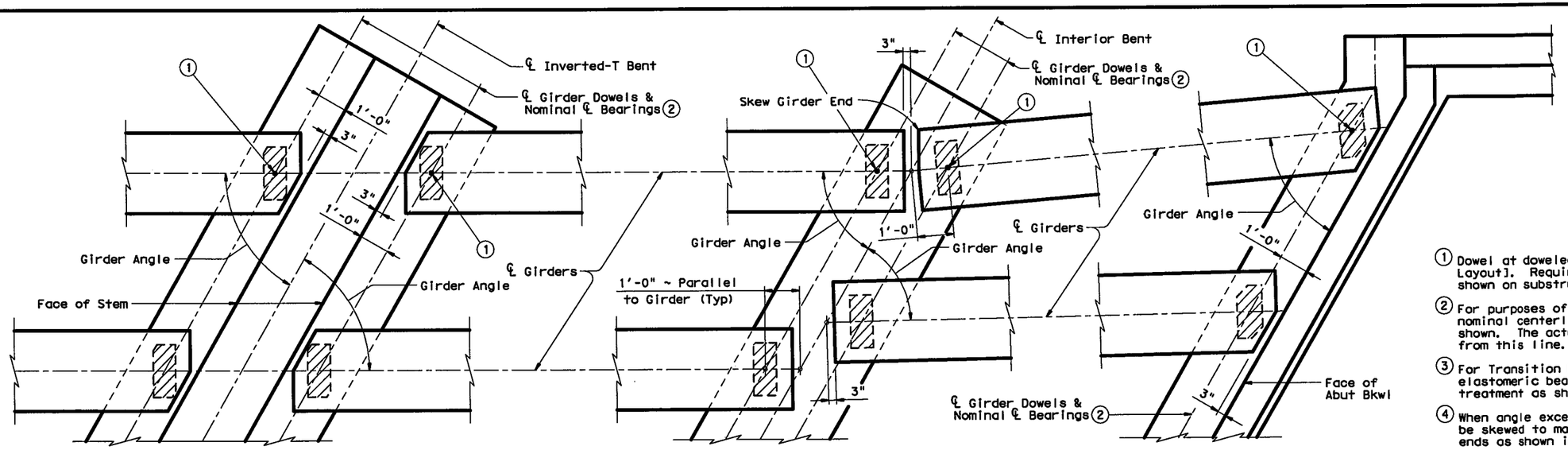

AT INVERTED-T BENT W/SKEW

AT CONVENTIONAL INTERIOR BENT W/SKEW

AT ABUTMENT W/SKEW (3)

(1) Dowel at doweled girder end [labeled (D) on Bridge Layout]. Required for outside girder only or as shown on substructure details.

(2) For purposes of computing Bearing Seat Elevations, nominal centerline of bearing must be defined as shown. The actual center of bearing pad may vary from this line.

(3) For Transition Bents with backwall, girder and elastomeric bearings must receive the same treatment as shown for Abutments.

(4) When angle exceeds 0°, one or both girders ends must be skewed to maintain the clearance between girder ends as shown in view.

(5) See Elastomeric Bearing Data Table for Bearing size. Girder end skew angles in Table not applicable for this situation. Table reflects girder conflicts of this type on radial bents only.

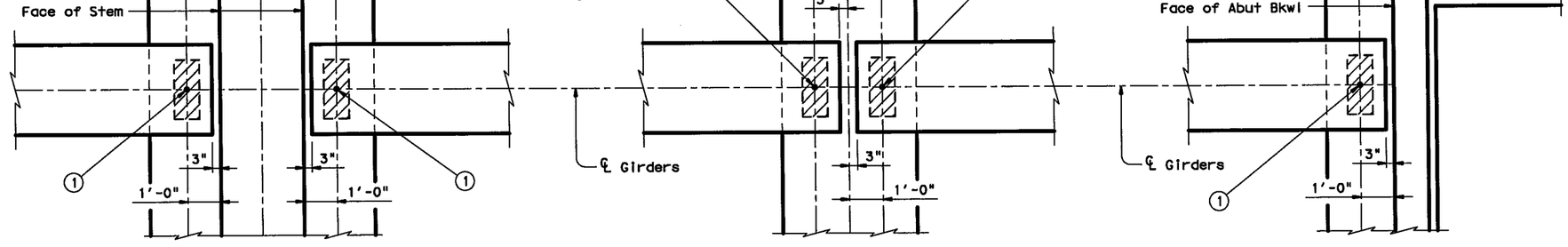

AT INVERTED-T BENT

AT CONVENTIONAL INTERIOR BENT

AT ABUTMENT (3)

GIRDER END DETAILS

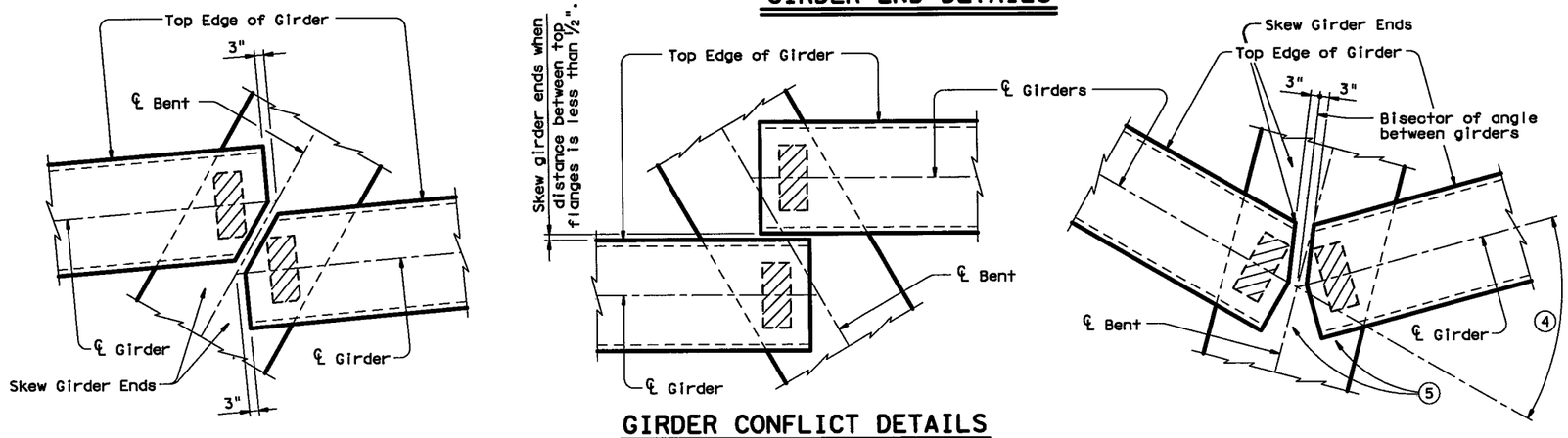

GIRDER CONFLICT DETAILS

GENERAL NOTES:

These details accommodate skew angles up to 60°.

Shop drawings for approval are required.

A bearing layout which identifies location and orientation of all bearings must be developed by the bearing fabricator. Permanently mark each bearing in accordance with the bearing layout. A copy of the bearing layout is to be provided to the Engineer.

Cost of furnishing and installing elastomeric bearings, including beveled and embedded steel plates, must be included in unit price bid for "Prestressed Concrete Girders".

HL93 LOADING — SHEET 1 OF 3

Texas Department of Transportation
Bridge Division

ELASTOMERIC BEARING AND GIRDER END DETAILS
PRESTR CONCRETE I-GIRDERS

IGEB

FILE: igebste1.dgn	DN: AEE	CK: JMH	DW: JTR	CK: TxDOT
©TxDOT June 2007	DISTRICT	FEDERAL AID PROJECT		SHEET
REVISIONS 12/10: Added Sole Plate Details.	FTW	(SEE TITLE SHEET)		1802
	COUNTY	CONTROL	SECT	JOB	HIGHWAY
	TARRANT	14	16	255	IH 35W

LEVELS DISPLAYED
PATH:

DISCLAIMER:
The use of this standard is governed by the "Texas Engineering Practice Act". No warranty of any kind is made by TxDOT for any purpose whatsoever. TxDOT assumes no responsibility for the conversion of this standard to other formats or for incorrect results or damages resulting from its use.

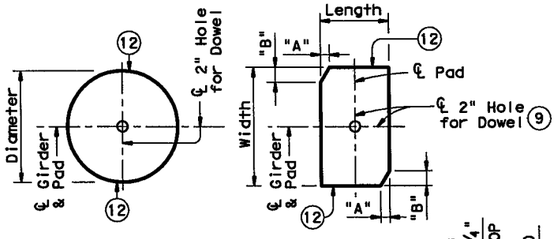

PLANS (10)

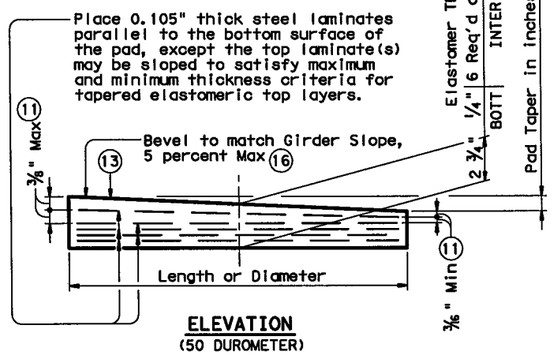

ELEVATION
(50 DUROMETER)

LAMINATED ELASTOMERIC BEARING DETAILS (14)

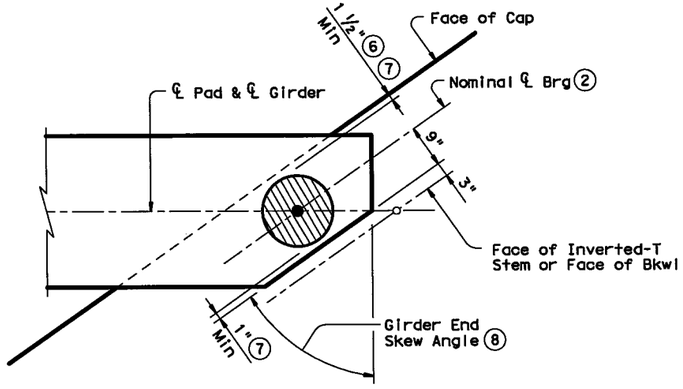

ROUND BEARINGS FOR SKEWED GIRDER ENDS AT FACE OF INVERTED-T STEM OR FACE OF BKWL

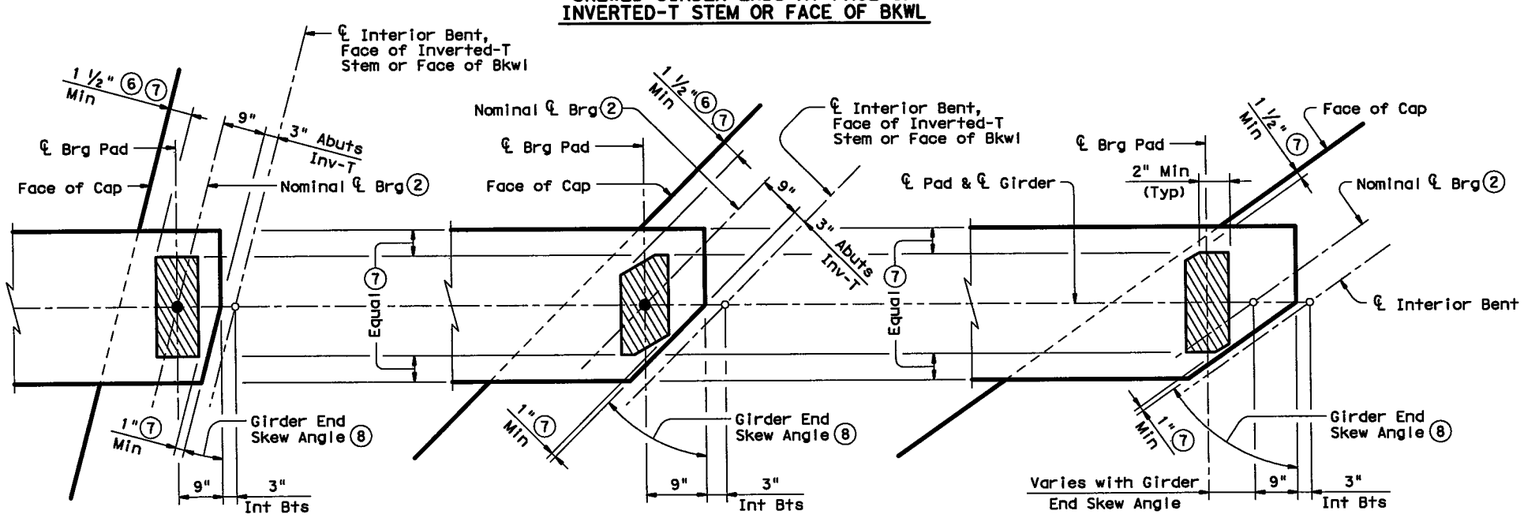

SKEWED GIRDER ENDS AT INT BENTS, FACE OF INVERTED-T STEM OR FACE OF BKWL

SKEWED GIRDER ENDS AT CONVENTIONAL INTERIOR BENTS (17)
(No Girder Dowels)

ELASTOMERIC BEARING PLACEMENT DIAGRAMS

TABLE OF MINIMUM SUBSTRUCTURE DIMENSIONS (15)

Girder Type	Abutments	Int Bents	Inv-T Bents
	Face of Bkwl to Face of Cap	Overall Cap Width	Corbel Width
Tx28 thru Tx54	1'-9"	3'-6"	1'-10 1/2"
Tx62 & Tx70	2'-0"	4'-0"	2'-1 1/2"

ELASTOMERIC BEARING DATA TABLE

Bent Type	Girder Type	Bearing Type (13)	Girder End Skew Angle Range	Pad Size Lgth x Wdth	Pad Clip Dimensions "A"	Pad Clip Dimensions "B"
ABUTMENTS, INVERTED-T AND TRANSITION BENTS WITH BACKWALLS	Tx28, Tx34, Tx40, Tx46 & Tx54	G-1-"N"	0° thru 21°	8" x 21"	---	---
		G-2-"N"	21°+ thru 30°	8" x 21"	1 1/2"	2 1/2"
		G-3-"N"	30°+ thru 45°	9" x 21"	4 1/2"	4 1/2"
		G-4-"N"	45°+ thru 60°	15" Dia	---	---
	Tx62 & Tx70	G-5-"N"	0° thru 21°	9" x 21"	---	---
		G-6-"N"	21°+ thru 30°	9" x 21"	1 1/2"	2 1/2"
		G-7-"N"	30°+ thru 45°	10" x 21"	4 1/2"	4 1/2"
		G-8-"N"	45°+ thru 60°	10" x 21"	7 1/4"	4 1/4"
CONVENTIONAL INTERIOR BENTS	Tx28, Tx34, Tx40, Tx46 & Tx54	---	---	---	---	---
		---	---	---	---	---
		G-1-"N"	0° thru 60°	8" x 21"	---	---
	Tx62 & Tx70	G-5-"N"	0° thru 60°	9" x 21"	---	---
CONVENTIONAL INTERIOR BENTS WITH SKEWED GIRDER ENDS (GIRDER CONFLICTS) (17)	Tx28, Tx34, Tx40, Tx46 & Tx54	G-1-"N"	0° thru 18°	8" x 21"	---	---
		G-2-"N"	18°+ thru 30°	8" x 21"	1 1/2"	2 1/2"
		G-9-"N"	30°+ thru 45°	8" x 21"	3"	3"
		G-10-"N"	45°+ thru 60°	9" x 21"	6"	3 1/2"
	Tx62 & Tx70	G-5-"N"	0° thru 18°	9" x 21"	---	---
		G-5-"N"	18°+ thru 30°	9" x 21"	---	---
		G-11-"N"	30°+ thru 45°	9" x 21"	1 1/2"	1 1/2"
		G-12-"N"	45°+ thru 60°	9" x 21"	3"	1 3/4"

(2) For purposes of computing Bearing Seat Elevations, nominal centerline of bearing must be defined as shown. The actual center of bearing pad may vary from this line.

(6) 3" for Inverted-T.

(7) Factors controlling laminated bearing placement if no dowel is present. Place Centerline Pad as near Nominal Centerline Brg as possible between limits shown.

(8) Girder end skew angle is equal to 90° minus the girder angle except at some conflicting girders.

(9) Provide 2" Dia Hole only at locations required. See substructure details for location.

(10) See Elastomeric Bearing Data Table for dimensions.

(11) Maximum and minimum layer thicknesses shown are for elastomer only, on tapered layers.

(12) Locate Permanent Mark here.

(13) BEARING TYPE must be indicated on all pads. For tapered pads, BEARING TYPE must be located on the high side. The Fabricator must include the value of "N" (amount of taper in 1/8" increments) in this mark.
Examples: N=0, (for 0" taper)
N=1, (for 1/8" taper)
N=2, (for 1/4" taper)
(etc.)
Fabricated pad top surface slope must not vary from plan girder slope by more than $\left(\frac{0.0625"}{\text{Length or Dia}}\right)$ IN/IN.

(14) The use of Polyisoprene (natural rubber), for the manufacture of bearing pads, is not permitted.

(15) Substructure dimensions must satisfy the minimums provided to accommodate the elastomeric bearings shown on this standard.

(16) See sheet 3 of 3 for beveled plate use when slopes exceed 5 percent.

(17) If girder end is skewed for a girder conflict at an interior bent and a beveled sole plate is required, use bearing type for abutments at this location. Location of bearing centerline is to be set as for abutments in this case.

HL93 LOADING SHEET 2 OF 3

Texas Department of Transportation
Bridge Division

ELASTOMERIC BEARING AND GIRDER END DETAILS
PRESTR CONCRETE I-GIRDERS

IGEB

FILE: igebstel.dgn	DN: AEE	CK: JMH	DW: JTR	CK: TxDOT
©TxDOT June 2007	DISTRICT	FEDERAL AID PROJECT		SHEET
REVISIONS 12/10: Added Sole Plate Details.	FTW	(SEE TITLE SHEET)		1803
	COUNTY	CONTROL	SECT	JOB	HIGHWAY
	TARRANT	14	16	255	IH 35W

PATH:
LEVELS DISPLAYED

DISCLAIMER:
The use of this standard is governed by the "Texas Engineering Practice Act". No warranty of any kind is made by TxDOT for any purpose whatsoever. TxDOT assumes no responsibility for the conversion of this standard to other formats or for incorrect results or damages resulting from its use.

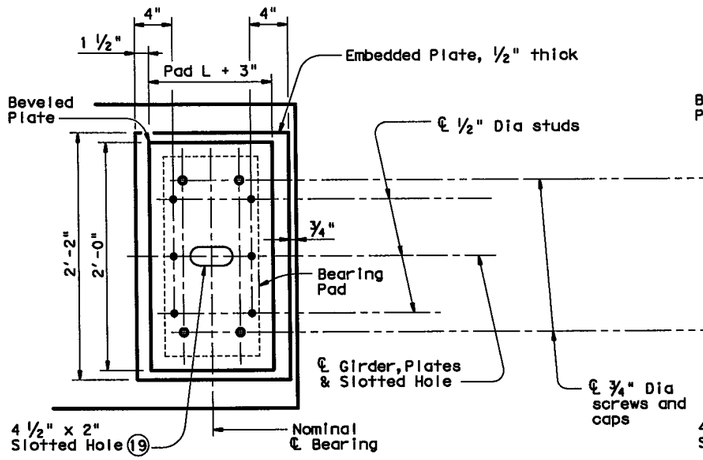

NORMAL GIRDER END
RECTANGULAR BEARING PAD

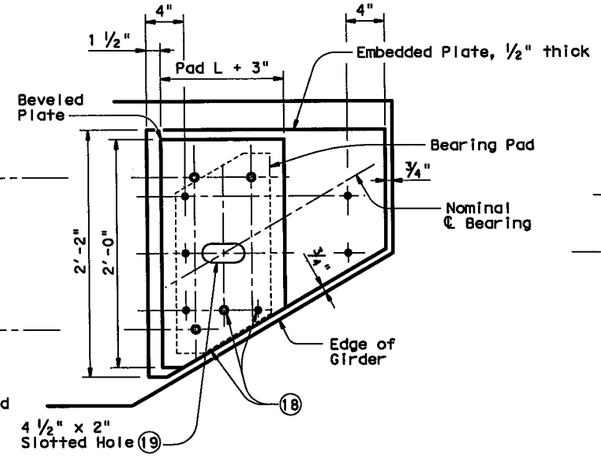

SKEWED GIRDER END
CLIPPED RECTANGULAR BEARING PAD

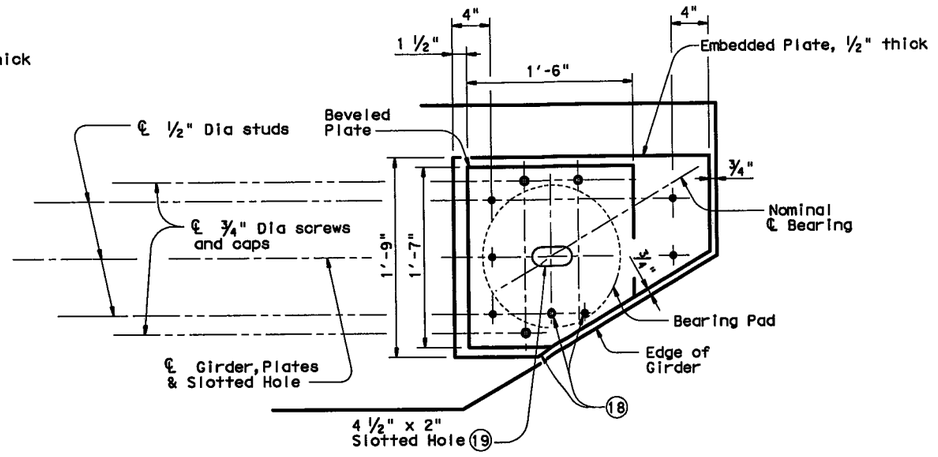

SKEWED GIRDER END
15" DIA BEARING PAD

PLAN VIEW OF SOLE PLATE DETAILS

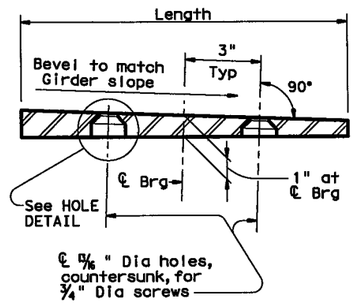

SECTION THRU BEVELED PLATE

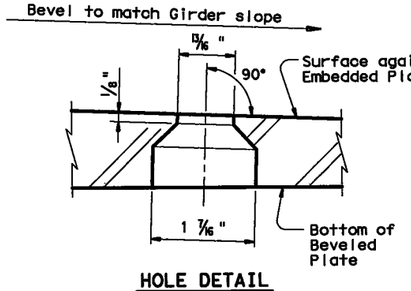

HOLE DETAIL

(18) Cut Beveled and Embedded Plates to match girder end skew. Adjust location of screw and stud as shown when necessary.

(19) Slotted hole is required at doweled girder end locations.

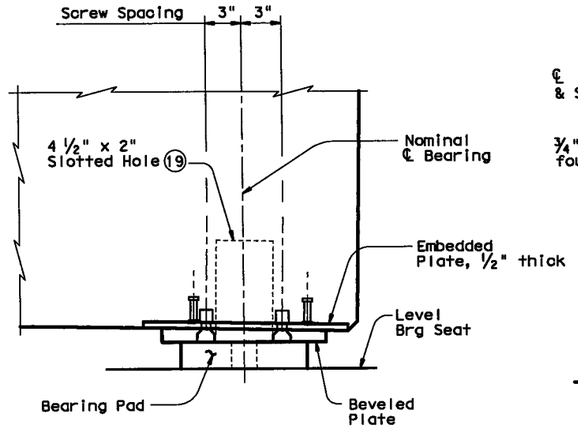

SIDE ELEVATION

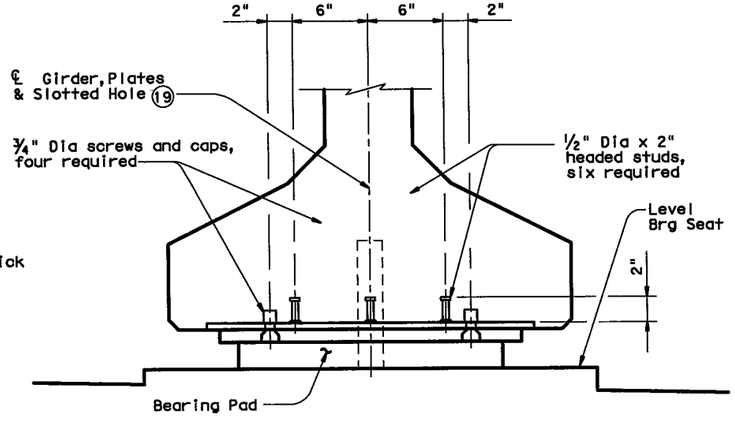

END ELEVATION

GIRDER DETAILS

SOLE PLATE NOTES:

Provide constant thickness elastomeric bearings with beveled and embedded steel sole plates in accordance with these details when the girder slope exceeds 5 percent or if otherwise required in the plans. Provide for all girders in the span.

On the shop drawings, dimension sole plates to the nearest 1/16" based on required thickness at centerline of bearing and slope of girder. Thickness tolerance variation from the approved shop drawings is 1/16"+/-, except variation from a plane parallel to the theoretical top surface can not exceed 1/16" total. Bearing surface tolerances listed in Item 424 apply to embedded and beveled plates.

Steel plate must conform to ASTM A 36, A 572 Gr 50, or A 709 Gr 36 or Gr 50. Hot dip galvanize both the embedded plate and beveled sole plate after fabrication. Seal weld caps to embedded plate before galvanizing.

When determining if relocation of screw holes and studs are necessary for skewed girder ends, minimum clearance from screw or stud centerline to plate edge is 1.25".

Tap threads in the embedded plate only. Drill and tap prior to galvanizing.

¾" Dia screws must be electroplated, socket flat head countersunk cap screws conforming to ASTM F 835. Electroplating must conform to ASTM B 633, SC 2, Type I. Provide screws long enough to maintain a ¾" minimum embedment into the embedded plate and galvanized cap. Provide galvanized steel caps (16 ga Min) with a nominal 1" inside diameter and deep enough to accommodate the screws, but not less than ½" deep or deeper than 1".

Install beveled sole plates prior to shipping girders. Installed screw heads must not protrude below the bottom of the beveled plate.

HL93 LOADING

Texas Department of Transportation
Bridge Division

ELASTOMERIC BEARING AND GIRDER END DETAILS
PRESTR CONCRETE I-GIRDERS

IGEB

FILE: igebstel.dgn	DN: JMH	CK: TxDOT	DW: BWH	CK: JMH		
©TxDOT June 2007	DISTRICT	FEDERAL AID PROJECT			SHEET	
REVISIONS	FTW	(SEE TITLE SHEET)			1804	
12/10: Added Sole Plate Details.	COUNTY		CONTROL	SECT	JOB	HIGHWAY
	TARRANT		14	16	255	IH 35W

PATH:
LEVELS DISPLAYED
1

DISCLAIMER:
The use of this standard is governed by the "Texas Engineering Practice Act". No warranty of any kind is made by TxDOT for any purpose whatsoever. TxDOT assumes no responsibility for the conversion of this standard to other formats or for incorrect results or damages resulting from its use.

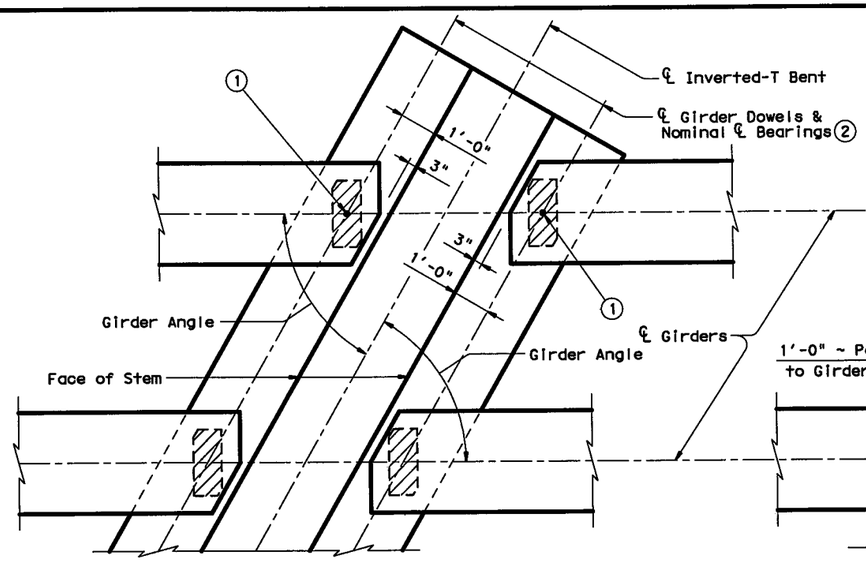

AT INVERTED-T BENT W/SKEW

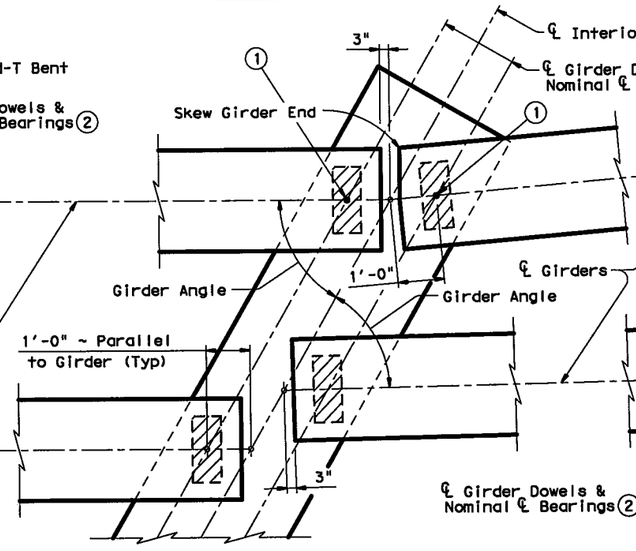

AT CONVENTIONAL INTERIOR BENT W/SKEW

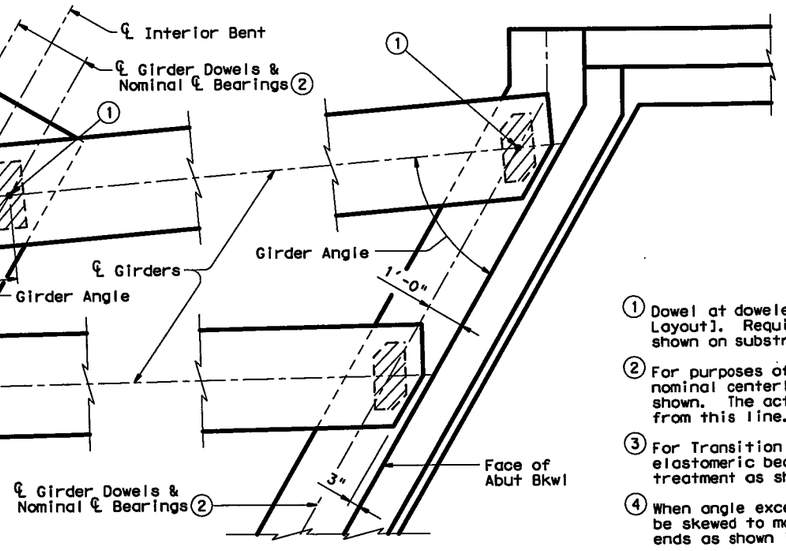

AT ABUTMENT W/SKEW (3)

(1) Dowel at doweled girder end [labeled (D) on Bridge Layout]. Required for outside girder only or as shown on substructure details.

(2) For purposes of computing Bearing Seat Elevations, nominal centerline of bearing must be defined as shown. The actual center of bearing pad may vary from this line.

(3) For Transition Bents with backwall, girder and elastomeric bearings must receive the same treatment as shown for Abutments.

(4) When angle exceeds 0°, one or both girders ends must be skewed to maintain the clearance between girder ends as shown in view.

(5) See Elastomeric Bearing Data Table for Bearing size. Girder end skew angles in Table not applicable for this situation. Table reflects girder conflicts of this type on radial bents only.

GENERAL NOTES:

These details accommodate skew angles up to 60°. Shop drawings for approval are required.

A bearing layout which identifies location and orientation of all bearings must be developed by the bearing fabricator. Permanently mark each bearing in accordance with the bearing layout. A copy of the bearing layout is to be provided to the Engineer.

Cost of furnishing and installing elastomeric bearings, including beveled and embedded steel plates, must be included in unit price bid for "Prestressed Concrete Girders".

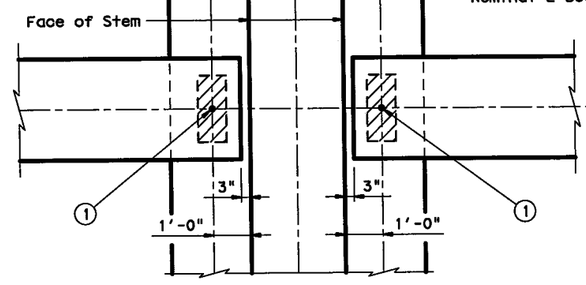

AT INVERTED-T BENT

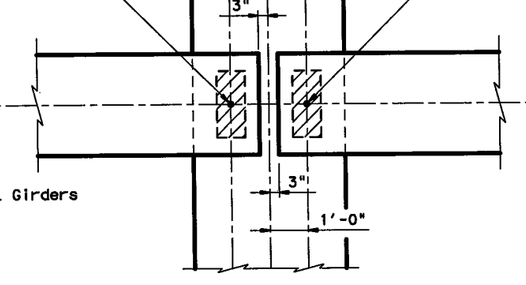

AT CONVENTIONAL INTERIOR BENT

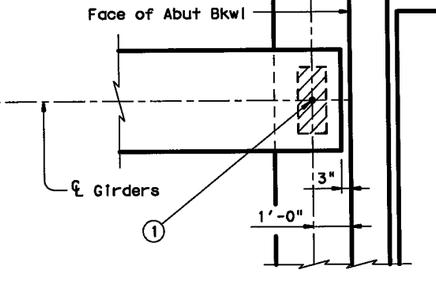

AT ABUTMENT (3)

GIRDER END DETAILS

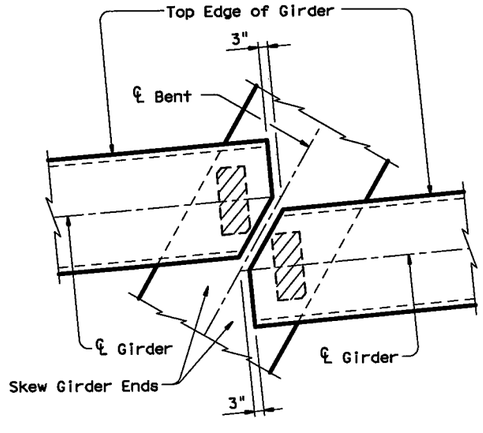

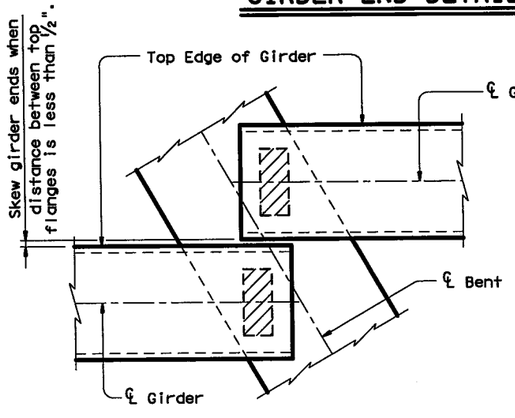

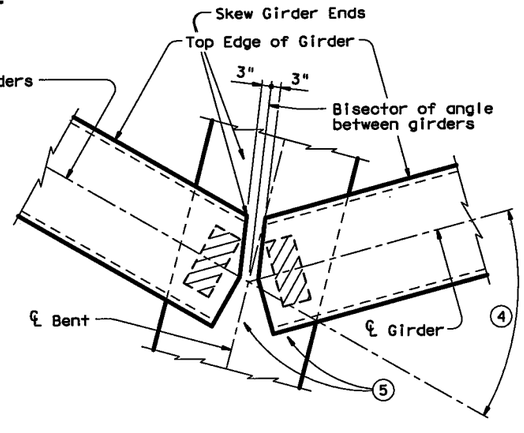

GIRDER CONFLICT DETAILS

⚠ ADDED "MODIFIED BEARING PAD DATA TABLE" ON SHEET 2 OF 2.

TIMOTHY J. ROSS
98465
LICENSED
PROFESSIONAL ENGINEER
STATE OF TEXAS
7/6/12

TBPE REGISTRATION NO. F-1475

HL93 LOADING SHEET 1 OF 3

Texas Department of Transportation
Bridge Division

ELASTOMERIC BEARING AND GIRDER END DETAILS
PRESTR CONCRETE I-GIRDERS

IGEB(MOD)

FILE: igebste1.dgn	DN: AEE	CK: JMH	DW: JTR	CK: TxDOT	
©TxDOT June 2007	DISTRICT	FEDERAL AID PROJECT			SHEET
REVISIONS	FTW	(SEE TITLE SHEET)			1805
12/10: Added Sole Plate Details.	COUNTY		CONTROL	SECT	JOB	HIGHWAY
	TARRANT		14	16	255	IH 35W

PATH:
LEVELS DISPLAYED

DISCLAIMER:
The use of this standard is governed by the "Texas Engineering Practice Act". No warranty of any kind is made by TxDOT for any purpose whatsoever. TxDOT assumes no responsibility for the conversion of this standard to other formats or for incorrect results or damages resulting from its use.

LEVELS DISPLAYED

PATH:

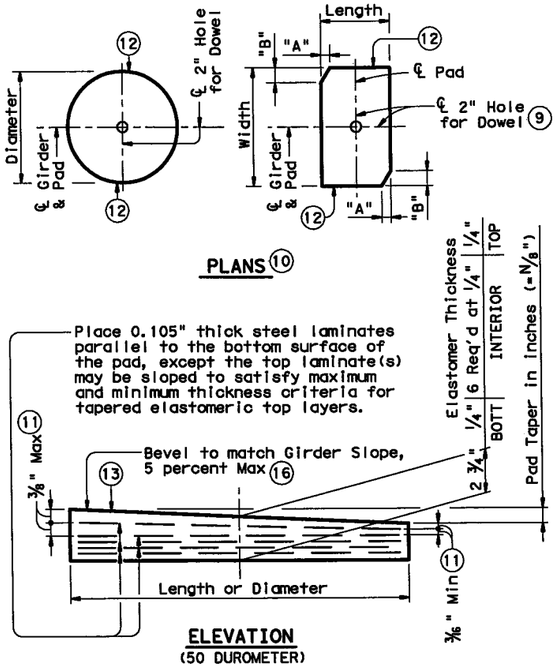

LAMINATED ELASTOMERIC BEARING DETAILS (14)

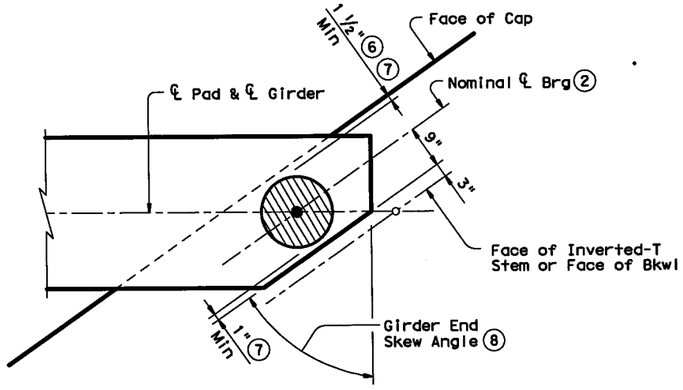

ROUND BEARINGS FOR SKEWED GIRDER ENDS AT FACE OF INVERTED-T STEM OR FACE OF BKWL

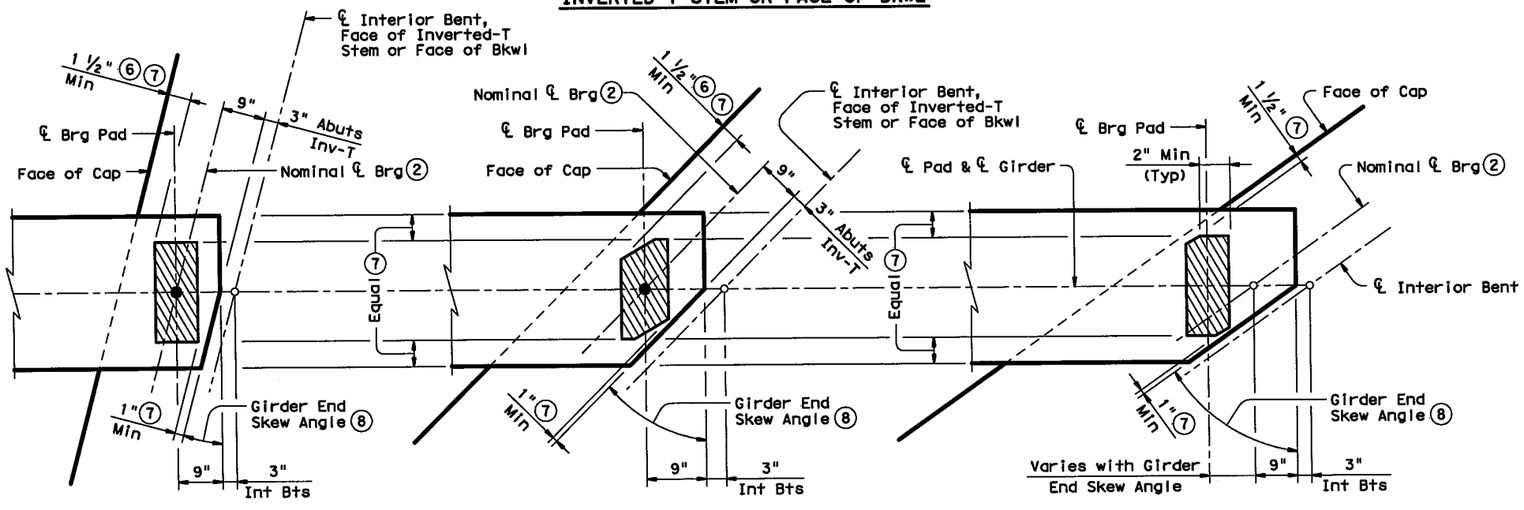

SKEWED GIRDER ENDS AT INT BENTS, FACE OF INVERTED-T STEM OR FACE OF BKWL

SKEWED GIRDER ENDS AT CONVENTIONAL INTERIOR BENTS (17) (No Girder Dowels)

ELASTOMERIC BEARING PLACEMENT DIAGRAMS

TABLE OF MINIMUM SUBSTRUCTURE DIMENSIONS (15)

Girder Type	Abutments: Face of Bkwl to Face of Cap	Int Bents: Overall Cap Width	Inv-T Bents: Corbel Width
Tx28 thru Tx54	1'-9"	3'-6"	1'-10 1/2"
Tx62 & Tx70	2'-0"	4'-0"	2'-1 1/2"

⚠

MODIFIED BEARING PAD DATA TABLE

Bridge	Bent	Bearing Type (13)	Pad Size Lgth x Width	Pad Clip Dimensions "A"	Pad Clip Dimensions "B"
NB IH 35W OVER BIG FOSSIL CK	ABUT 1, BENT 2 (BK), BENT 3 (FWD), ABUT 4	C-1-"N"	7" x 16"	---	---
SB IH 35W OVER BIG FOSSIL CK	ABUT 1, BENT 2 (BK)	C-1-"N"	7" x 16"	---	---
SB FRONTAGE RD OVER BIG FOSSIL CK	ABUT 1, BENT 2 (BK)	IV-2-"N"	7" x 22"	2 1/2"	4 1/2"

ELASTOMERIC BEARING DATA TABLE

Bent Type	Girder Type	Bearing Type (13)	Girder End Skew Angle Range	Pad Size Lgth x Width	Pad Clip Dimensions "A"	Pad Clip Dimensions "B"
ABUTMENTS, INVERTED-T AND TRANSITION BENTS WITH BACKWALLS	Tx28, Tx34, Tx40, Tx46 & Tx54	G-1-"N"	0° thru 21°	8" x 21"	---	---
		G-2-"N"	21°+ thru 30°	8" x 21"	1 1/2"	2 1/2"
		G-3-"N"	30°+ thru 45°	9" x 21"	4 1/2"	4 1/2"
		G-4-"N"	45°+ thru 60°	15" Dia	---	---
	Tx62 & Tx70	G-5-"N"	0° thru 21°	9" x 21"	---	---
		G-6-"N"	21°+ thru 30°	9" x 21"	1 1/2"	2 1/2"
		G-7-"N"	30°+ thru 45°	10" x 21"	4 1/2"	4 1/2"
		G-8-"N"	45°+ thru 60°	10" x 21"	7 1/4"	4 1/4"
CONVENTIONAL INTERIOR BENTS	Tx28, Tx34, Tx40, Tx46 & Tx54	---	---	---	---	---
		---	---	---	---	---
		G-1-"N"	0° thru 60°	8" x 21"	---	---
	Tx62 & Tx70	G-5-"N"	0° thru 60°	9" x 21"	---	---
CONVENTIONAL INTERIOR BENTS WITH SKEWED GIRDER ENDS (GIRDER CONFLICTS) (17)	Tx28, Tx34, Tx40, Tx46 & Tx54	G-1-"N"	0° thru 18°	8" x 21"	---	---
		G-2-"N"	18°+ thru 30°	8" x 21"	1 1/2"	2 1/2"
		G-9-"N"	30°+ thru 45°	8" x 21"	3"	3"
		G-10-"N"	45°+ thru 60°	9" x 21"	6"	3 1/2"
	Tx62 & Tx70	G-5-"N"	0° thru 18°	9" x 21"	---	---
		G-5-"N"	18°+ thru 30°	9" x 21"	---	---
		G-11-"N"	30°+ thru 45°	9" x 21"	1 1/2"	1 1/2"
		G-12-"N"	45°+ thru 60°	9" x 21"	3"	1 3/4"

(2) For purposes of computing Bearing Seat Elevations, nominal centerline of bearing must be defined as shown. The actual center of bearing pad may vary from this line.

(6) 3" for Inverted-T.

(7) Factors controlling laminated bearing placement if no dowel is present. Place Centerline Pad as near Nominal Centerline Brg as possible between limits shown.

(8) Girder end skew angle is equal to 90° minus the girder angle except at some conflicting girders.

(9) Provide 2" Dia Hole only at locations required. See substructure details for location.

(10) See Elastomeric Bearing Data Table for dimensions.

(11) Maximum and minimum layer thicknesses shown are for elastomer only, on tapered layers.

(12) Locate Permanent Mark here.

(13) BEARING TYPE must be indicated on all pads. For tapered pads, BEARING TYPE must be located on the high side. The Fabricator must include the value of "N" (amount of taper in 1/8" increments) in this mark.
Examples: N=0, (for 0" taper)
N=1, (for 1/8" taper)
N=2, (for 1/4" taper)
(etc.)
Fabricated pad top surface slope must not vary from plan girder slope by more than $\left(\frac{0.0625"}{\text{Length or Dia}}\right)$ IN/IN.

(14) The use of Polyisoprene (natural rubber), for the manufacture of bearing pads, is not permitted.

(15) Substructure dimensions must satisfy the minimums provided to accommodate the elastomeric bearings shown on this standard.

(16) See sheet 3 of 3 for beveled plate use when slopes exceed 5 percent.

(17) If girder end is skewed for a girder conflict at an interior bent and a beveled sole plate is required, use bearing type for abutments at this location. Location of bearing centerline is to be set as for abutments in this case.

HL93 LOADING

STATE OF TEXAS
TIMOTHY J. ROSS
98465
LICENSED PROFESSIONAL ENGINEER
7/6/12

TBPE REGISTRATION NO. F-1475

⚠ ADDED "MODIFIED BEARING PAD DATA TABLE."

Texas Department of Transportation
Bridge Division

ELASTOMERIC BEARING AND GIRDER END DETAILS
PRESTR CONCRETE I-GIRDERS

IGEB (MOD)

FILE: igebstel.dgn	DN: AEE	CK: JMH	DW: JTR	CK: TxDOT
©TxDOT June 2007	DISTRICT	FEDERAL AID PROJECT		SHEET
REVISIONS	FTW	(SEE TITLE SHEET)		1806
12/10: Added Sole Plate Details.	COUNTY	CONTROL	SECT	JOB	HIGHWAY
	TARRANT	14	16	255	IH 35W

DISCLAIMER:
The use of this standard is governed by the "Texas Engineering Practice Act". No warranty of any kind is made by TxDOT for any purpose whatsoever. TxDOT assumes no responsibility for the conversion of this standard to other formats or for incorrect results or damages resulting from its use.

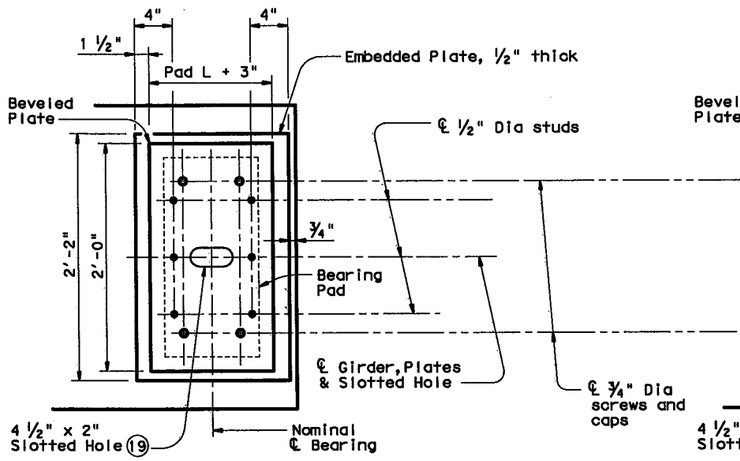

NORMAL GIRDER END
RECTANGULAR BEARING PAD

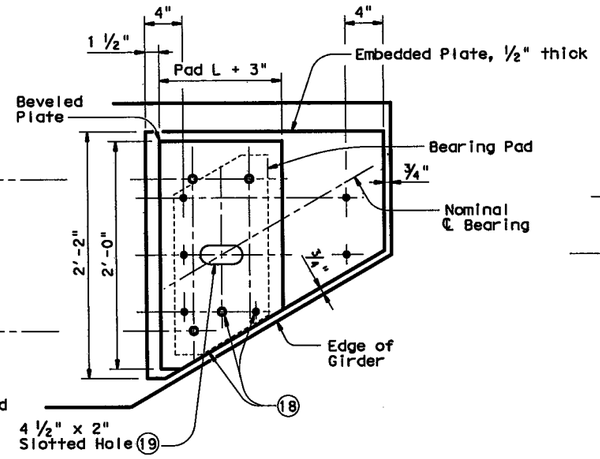

SKEWED GIRDER END
CLIPPED RECTANGULAR BEARING PAD

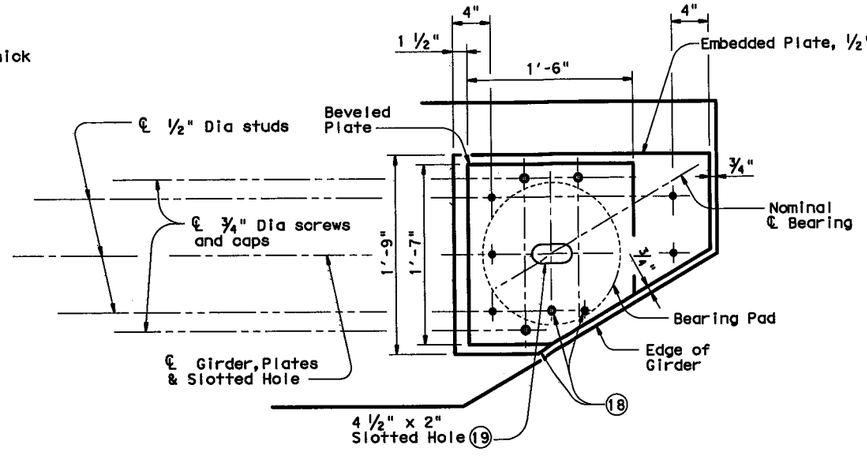

SKEWED GIRDER END
15" DIA BEARING PAD

PLAN VIEW OF SOLE PLATE DETAILS

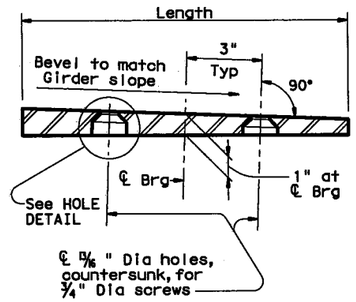

SECTION THRU BEVELED PLATE

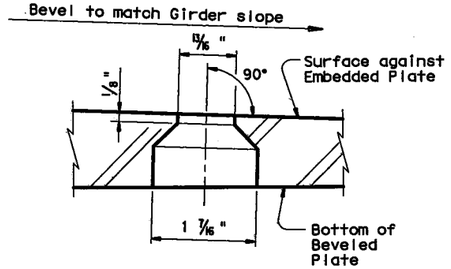

HOLE DETAIL

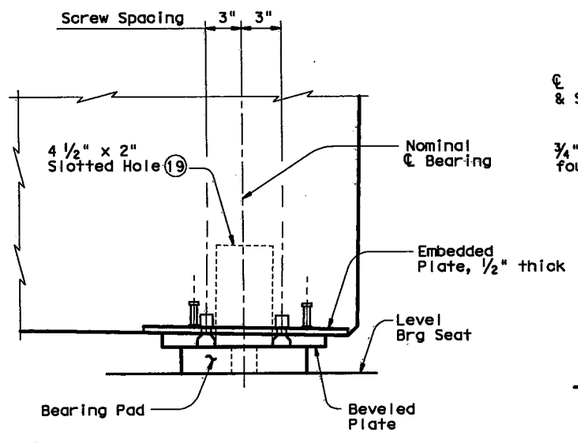

SIDE ELEVATION

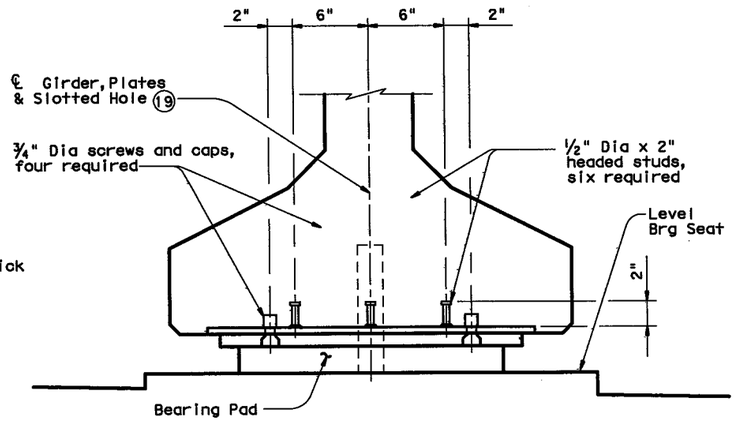

END ELEVATION

GIRDER DETAILS

(18) Cut Beveled and Embedded Plates to match girder end skew. Adjust location of screw and stud as shown when necessary.

(19) Slotted hole is required at doweled girder end locations.

SOLE PLATE NOTES:

Provide constant thickness elastomeric bearings with beveled and embedded steel sole plates in accordance with these details when the girder slope exceeds 5 percent or if otherwise required in the plans. Provide for all girders in the span.

On the shop drawings, dimension sole plates to the nearest 1/16" based on required thickness at centerline of bearing and slope of girder. Thickness tolerance variation from the approved shop drawings is 1/16"+/-, except variation from a plane parallel to the theoretical top surface can not exceed 1/16" total. Bearing surface tolerances listed in Item 424 apply to embedded and beveled plates.

Steel plate must conform to ASTM A 36, A 572 Gr 50, or A 709 Gr 36 or Gr 50. Hot dip galvanize both the embedded plate and beveled sole plate after fabrication. Seal weld caps to embedded plate before galvanizing.

When determining if relocation of screw holes and studs are necessary for skewed girder ends, minimum clearance from screw or stud centerline to plate edge is 1.25".

Tap threads in the embedded plate only. Drill and tap prior to galvanizing.

¾" Dia screws must be electroplated, socket flat head countersunk cap screws conforming to ASTM F 835. Electroplating must conform to ASTM B 633, SC 2, Type I. Provide screws long enough to maintain a ¾" minimum embedment into the embedded plate and galvanized cap. Provide galvanized steel caps (16 ga Min) with a nominal 1" inside diameter and deep enough to accommodate the screws, but not less than ½" deep or deeper than 1".

Install beveled sole plates prior to shipping girders. Installed screw heads must not protrude below the bottom of the beveled plate.

HL93 LOADING

STATE OF TEXAS
TIMOTHY J. ROSS
98465
LICENSED
PROFESSIONAL ENGINEER
7/6/12

TBPE REGISTRATION NO. F-1475

⚠ ADDED "MODIFIED BEARING PAD DATA TABLE" ON SHEET 2 OF 2.

Texas Department of Transportation
Bridge Division

ELASTOMERIC BEARING AND GIRDER END DETAILS
PRESTR CONCRETE I-GIRDERS

IGEB (MOD)

FILE: igebstel.dgn	DN: JMH	CK: TxDOT	DW: BWH	CK: JMH
©TxDOT June 2007	DISTRICT	FEDERAL AID PROJECT		SHEET
REVISIONS	FTW	(SEE TITLE SHEET)		1807
12/10: Added Sole Plate Details.	COUNTY	CONTROL	SECT	JOB	HIGHWAY
	TARRANT	14	16	255	IH 35W

PATH:
LEVELS DISPLAYED

DISCLAIMER:
The use of this standard is governed by the "Texas Engineering Practice Act". No warranty of any kind is made by TxDOT for any purpose whatsoever. TxDOT assumes no responsibility for the conversion of this standard to other formats or for incorrect results or damages resulting from its use.

ACC:

LEVELS DISPLAYED

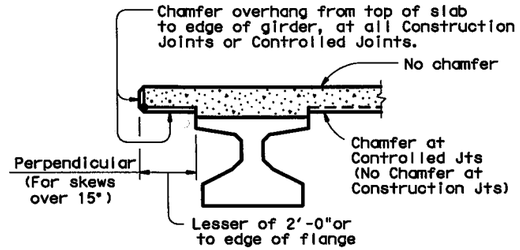

CHAMFER LIMITS DETAIL (1)

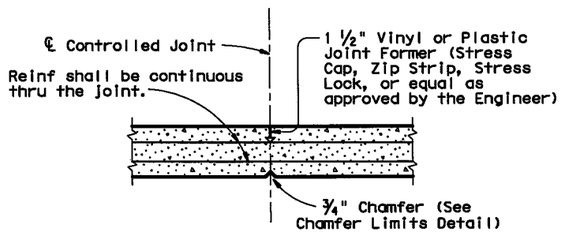

CONTROLLED JOINT DETAIL

(Saw-cutting will not be allowed)

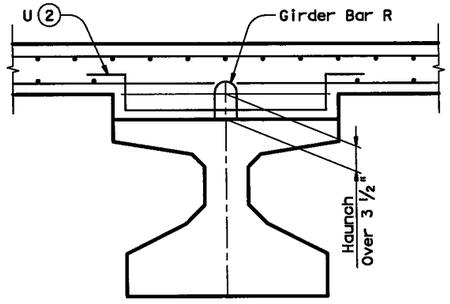

HAUNCH REINFORCING DETAIL

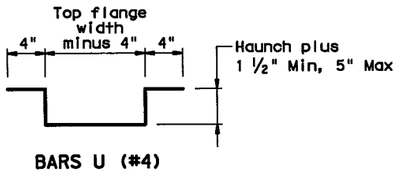

BARS U (#4)

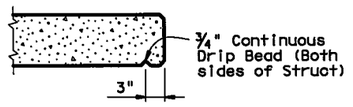

DRIP BEAD DETAIL

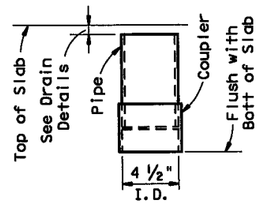

C-I-P DRAIN DETAIL (8)

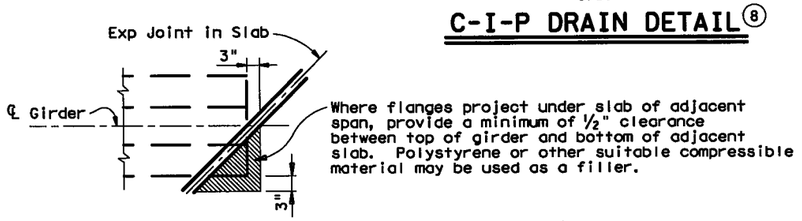

TREATMENT AT GIRDER END FOR SKEWED SPANS

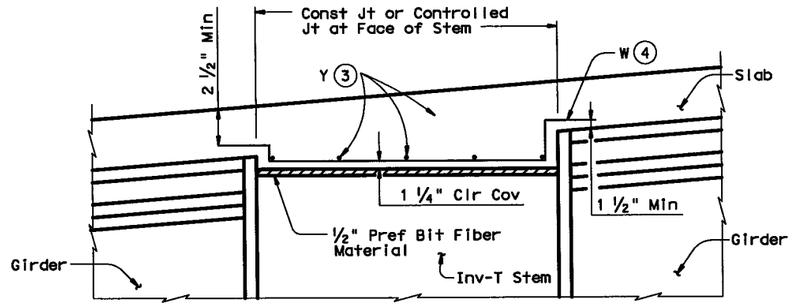

REINFORCEMENT OVER INV-T BENTS

Slab reinforcement not shown for clarity.

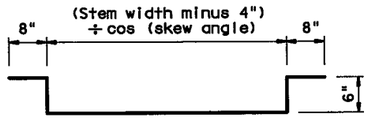

BARS W (#4)

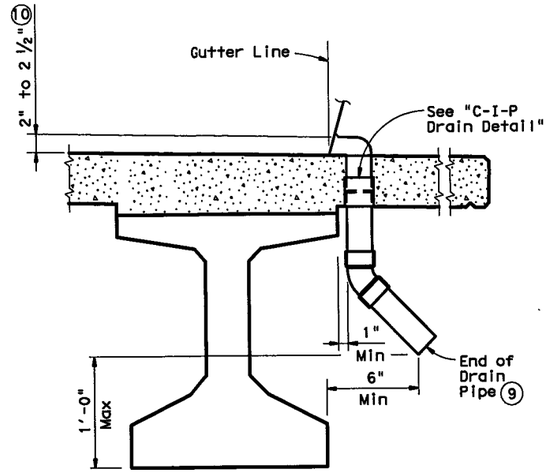

DRAIN DETAIL (11)

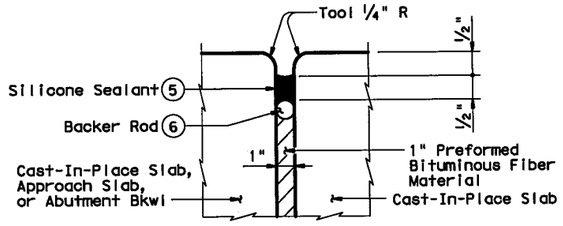

TYPE A JOINT DETAIL (7)

GENERAL NOTES:
Designed in accordance with AASHTO LRFD Specifications.
All items (reinforcing steel, drains, joint formers, etc.) shown on this sheet shall be considered subsidiary to other bid items.

DECK FORMWORK NOTES:
Overhang bracket hangers are limited to a safe working load of 3,600 lbs, applied to and along the axis of a coil rod at 45 degrees from vertical, regardless of higher loads permitted by hanger manufacturers. Do not place a hanger less than 12" from girder end. Space hangers accordingly.

(1) See Span details for type of joint and joint locations.

(2) Space Bars U with Girder Bars R in all areas where measured haunch exceeds 3 ½".

(3) Space Bars Y (#4) at 12" Max. Use 2" end cover. Number of Bars Y must satisfy spacing limit. Place parallel to bent.

(4) Space Bars W at 12" Max (3" from end of cap). Tilt if necessary to maintain cover requirements. Place parallel to longitudinal slab reinforcement.

(5) Class 7 silicone sealant that conforms to DMS-6310. Install when ambient temperature is between 55°F and 85°F and rising. Engineer to determine allowable hours for sealant application.

(6) 1 ¼" backer rod must be compatible with joint sealant. Use of multiple pieces to create a backer rod cross section is not permitted. Top of backer rod must be convex as shown.

(7) The maximum distance between Type A expansion joints is 100'. See Bridge Layout for location of joints. Type A joints will not be paid for directly, but shall be considered subsidiary to Item 420, "Concrete Structures".

(8) Roughen outside of PVC with coarse rasp or equal to ensure bond with cast-in-place concrete.

(9) No water shall be discharged onto girders.

(10) Drain Entrance formed in Rail or Sidewalk.

(11) All drain pipe and fittings to be 4" diameter (Sch 40) PVC. See Item 481 "PVC Pipe for Drains" for pipe, connections and solvent welding. Bend reinforcing steel to clear PVC 1". Drain length and location shall be as directed by the Engineer. No drains shall be permitted over roadways or railways, or within 10'-0" of Bent Caps. Degrease outside of exposed PVC, apply acrylic water base primer, then coat with same surface finishing material as used for outside girder face. Variations of the above designs, as required for the type of rail used and its location on the structure, shall be installed with the approval and direction of the Engineer.

Texas Department of Transportation
Bridge Division

MISCELLANEOUS SLAB DETAILS
PRESTR CONCRETE I-GIRDERS

IGMS

FILE: igmsste1.dgn	DN: TxDOT	CK: TxDOT	DW: JTR		CK: TxDOT	
©TxDOT June 2007	DISTRICT	FEDERAL AID PROJECT				SHEET
REVISIONS	FTW	(SEE TITLE SHEET)				1808
02/09 Deck Formwork Notes	COUNTY		CONTROL	SECT	JOB	HIGHWAY
	TARRANT		14	16	255	IH 35W

DISCLAIMER:
The use of this standard is governed by the "Texas Engineering Practice Act". No warranty of any kind is made by TxDOT for any purpose whatsoever. TxDOT assumes no responsibility for the conversion of this standard to other formats or for incorrect results or damages resulting from its use.

LEVELS DISPLAYED | ACC:

DESIGNED GIRDERS (DEPRESSED STRANDS)

STRUCTURE	SPAN NO.	GIRDER NO.	GIRDER TYPE	PRESTRESSING STRANDS								CONCRETE	
				NON-STD STRAND PATTERN	TOTAL NO.	SIZE (in)	STRGTH fpu (ksi)	"e" @ (in)	"e" END (in)	DEPRESSED NO.	DEPRESSED TO (in)	RELEASE STRGTH ① f'ci (ksi)	MINIMUM 28 DAY COMP STRGTH f'c (ksi)
DC 35N-287W	1	1	Tx54	A	72	½	270	15.67	7.12	22	50.5	5.500	7.600
	1	2	Tx54	A	72	½	270	15.67	7.12	22	50.5	5.500	7.600
	1	3	Tx54	A	72	½	270	15.67	7.12	22	50.5	5.500	7.600
	1	4	Tx54	A	72	½	270	15.67	7.12	22	50.5	5.500	7.600
	1	5	Tx54	A	72	½	270	15.67	7.12	22	50.5	5.500	7.600
	5	1	Tx54		58	½	270	17.77	10.87	10	50.5	5.200	5.900
	5	2	Tx54		58	½	270	17.77	10.87	10	50.5	5.200	5.900
	5	3	Tx54		56	½	270	17.94	10.79	10	50.5	5.000	5.800
	5	4	Tx54		56	½	270	17.94	10.79	10	50.5	5.000	5.800
	5	5	Tx54		56	½	270	17.94	10.79	10	50.5	5.000	5.800
DC MLN-287W	1	1	Tx54	B	70	½	270	16.09	7.52	20	50.5	5.500	7.400
	1	2	Tx54	C	62	½	270	17.39	10.04	12	50.5	5.400	6.200
	1	3	Tx54	C	62	½	270	17.39	10.04	12	50.5	5.400	6.200
	1	4	Tx54	C	62	½	270	17.39	10.04	12	50.5	5.400	6.200
	2	1	Tx54	B	70	½	270	16.09	7.52	20	50.5	5.500	7.600
	2	2	Tx54	C	62	½	270	17.39	10.04	12	50.5	5.400	6.200
	2	3	Tx54	C	62	½	270	17.39	10.04	12	50.5	5.400	6.200
	2	4	Tx54	C	62	½	270	17.39	10.04	12	50.5	5.400	6.200
	6	1	Tx54	D	54	⅝	270	17.38	7.30	16	50.5	5.900	7.400
	6	2	Tx54	D	54	⅝	270	17.38	7.30	16	50.5	5.900	7.300
	6	3	Tx54	D	54	⅝	270	17.38	7.30	16	50.5	5.900	7.200
	6	4	Tx54	D	54	⅝	270	17.38	7.30	16	50.5	6.000	7.200
	7	1	Tx54	D	54	⅝	270	17.38	7.30	16	50.5	5.900	7.300
	7	2	Tx54	D	54	⅝	270	17.38	7.30	16	50.5	5.900	7.300
	7	3	Tx54	D	54	⅝	270	17.38	7.30	16	50.5	5.900	7.200
	7	4	Tx54	D	54	⅝	270	17.38	7.30	16	50.5	6.000	7.200
	8	1	Tx54	D	54	⅝	270	17.38	7.30	16	50.5	5.900	7.500
	8	2	Tx54	D	54	⅝	270	17.38	7.30	16	50.5	5.900	7.500
	8	3	Tx54	D	54	⅝	270	17.38	7.30	16	50.5	5.900	7.900
	8	4	Tx54	D	54	⅝	270	17.38	7.30	16	50.5	5.900	7.900
DC 287E-MLS	1	1	Tx54	E	52	⅝	270	17.78	8.08	14	50.5	5.900	7.800
	1	2	Tx54	F	46	⅝	270	18.31	8.40	12	50.5	5.300	6.700
	1	3	Tx54	F	46	⅝	270	18.31	8.40	12	50.5	5.300	6.700
	1	4	Tx54	F	46	⅝	270	18.31	8.40	12	50.5	5.300	6.700
	1	5	Tx54	F	46	⅝	270	18.31	8.40	12	50.5	5.300	6.700
	2	1	Tx54	E	52	⅝	270	17.78	8.08	14	50.5	5.900	7.800
	2	2	Tx54	F	46	⅝	270	18.31	8.40	12	50.5	5.300	6.700
	2	3	Tx54	F	46	⅝	270	18.31	8.40	12	50.5	5.300	6.700
	2	4	Tx54	F	46	⅝	270	18.31	8.40	12	50.5	5.300	6.700
	2	5	Tx54	F	46	⅝	270	18.31	8.40	12	50.5	5.300	6.700
	3	1	Tx54	E	52	⅝	270	17.78	8.08	14	50.5	5.900	7.800
	3	2	Tx54	F	46	⅝	270	18.31	8.40	12	50.5	5.300	6.700
	3	3	Tx54	F	46	⅝	270	18.31	8.40	12	50.5	5.300	6.700
	3	4	Tx54	F	46	⅝	270	18.31	8.40	12	50.5	5.300	6.700
	3	5	Tx54	F	46	⅝	270	18.31	8.40	12	50.5	5.300	6.700
	5	1	Tx54		50	½	270	18.37	11.97	8	48.5	4.700	5.400
	5	2	Tx54		50	½	270	18.37	11.97	8	48.5	4.700	5.400
	5	3	Tx54		50	½	270	18.37	11.97	8	48.5	4.700	5.400
	5	4	Tx54		50	½	270	18.37	11.97	8	48.5	4.700	5.400
	6	1	Tx54		48	½	270	18.51	11.84	8	48.5	4.500	5.200
	6	2	Tx54		48	½	270	18.51	11.84	8	48.5	4.500	5.200
	6	3	Tx54		46	½	270	18.66	11.70	8	48.5	4.300	5.100
	6	4	Tx54		46	½	270	18.66	11.70	8	48.5	4.300	5.100
	6	5	Tx54		40	½	270	19.11	13.41	6	44.5	4.000	5.000
	7	1	Tx54		52	½	270	18.24	12.08	8	48.5	4.900	5.700
	7	2	Tx54		52	½	270	18.24	12.08	8	48.5	4.900	5.700
	7	3	Tx54		52	½	270	18.24	12.08	8	48.5	4.900	5.700
	7	4	Tx54		52	½	270	18.24	12.08	8	48.5	4.900	5.700
	7	5	Tx54		52	½	270	18.24	12.08	8	48.5	4.900	5.700

OPTIONAL DESIGN

STRUCTURE	DESIGN LOAD COMP STRESS (TOP @) (SERVICE I) fct (ksi)	DESIGN LOAD TENSILE STRESS (BOTT @) (SERVICE III) fcb (ksi)	REQUIRED MINIMUM ULTIMATE MOMENT CAPACITY (STRENGTH I) (ft-kips)	LIVE LOAD DISTRIBUTION FACTOR ② Moment	LIVE LOAD DISTRIBUTION FACTOR ② Shear
DC 35N-287W	4.164	-4.164	8221	0.623	0.814
	4.328	-4.363	8566	0.623	0.814
	4.325	-4.361	8562	0.623	0.814
	4.323	-4.358	8558	0.623	0.814
	4.150	-4.151	8198	0.623	0.814
	3.728	-3.779	7523	0.634	0.814
	3.762	-3.829	7613	0.635	0.814
	3.733	-3.801	7564	0.635	0.814
	3.704	-3.773	7514	0.636	0.814
	3.471	-3.484	7009	0.637	0.814
DC MLN-287W	4.212	-4.305	8654	0.691	0.761
	4.027	-4.043	7899	0.584	0.761
	3.990	-4.008	7839	0.585	0.761
	3.782	-3.739	7361	0.586	0.761
	4.213	-4.311	8672	0.693	0.764
	4.035	-4.055	7929	0.587	0.764
	3.997	-4.019	7862	0.587	0.764
	3.771	-3.725	7343	0.588	0.764
	4.716	-4.679	9010	0.577	0.767
	4.665	-4.652	8987	0.578	0.767
	4.621	-4.609	8910	0.578	0.767
	4.365	-4.283	8335	0.579	0.767
	4.688	-4.655	8975	0.577	0.767
	4.671	-4.656	8992	0.577	0.767
	4.637	-4.624	8937	0.578	0.767
	4.401	-4.322	8403	0.579	0.767
	4.570	-4.521	8752	0.577	0.767
	4.716	-4.695	9056	0.577	0.767
	4.739	-4.714	9081	0.577	0.767
	4.635	-4.571	8819	0.577	0.767
DC 287E-MLS	4.884	-4.669	8846	0.540	0.634
	4.521	-4.301	8042	0.470	0.634
	4.490	-4.274	7997	0.471	0.634
	4.459	-4.244	7945	0.471	0.634
	4.373	-4.108	7683	0.471	0.634
	4.885	-4.669	8846	0.540	0.634
	4.521	-4.301	8042	0.470	0.634
	4.491	-4.274	7997	0.471	0.634
	4.459	-4.244	7945	0.471	0.634
	4.373	-4.109	7683	0.471	0.634
	4.709	-4.507	8557	0.540	0.634
	4.358	-4.153	7788	0.472	0.634
	4.328	-4.126	7743	0.473	0.634
	4.297	-4.097	7692	0.473	0.634
	4.213	-3.966	7443	0.474	0.634
	3.179	-3.264	6675	0.673	0.847
	3.320	-3.460	7013	0.674	0.847
	3.278	-3.420	6939	0.675	0.847
	3.056	-3.143	6453	0.676	0.847
	3.268	-3.383	6862	0.685	0.857
	3.246	-3.372	6848	0.686	0.857
	3.186	-3.318	6757	0.687	0.857
	3.137	-3.274	6681	0.688	0.857
	2.924	-3.007	6214	0.689	0.857
	3.147	-3.354	7043	0.782	0.969
	3.356	-3.591	7439	0.782	0.969
	3.356	-3.591	7439	0.782	0.969
	3.356	-3.591	7439	0.782	0.969
	3.159	-3.362	7053	0.782	0.969

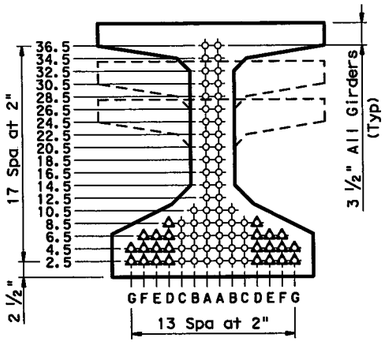

TYPE Tx28, Tx34 & Tx40 ③

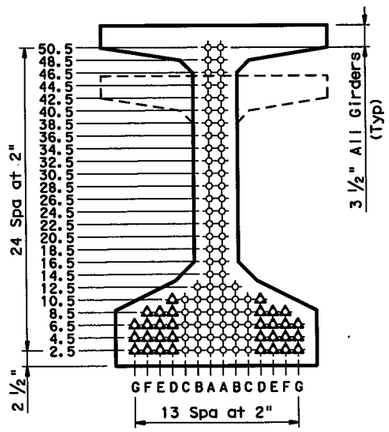

TYPE Tx46 & Tx54 ③

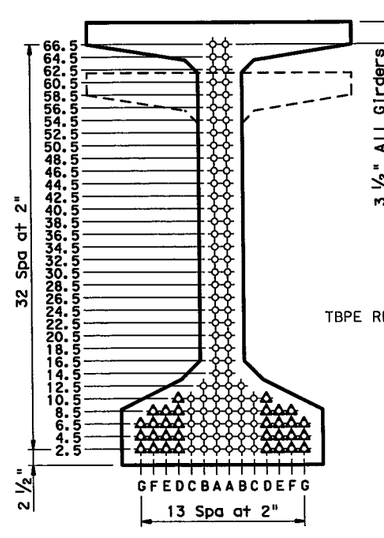

TYPE Tx62 & Tx70 ③

NON-STANDARD STRAND PATTERNS

PATTERN	STRAND ARRANGEMENT AT ℄ OF GIRDER
A	2.5(14), 4.5(14), 6.5(14), 8.5(12), 10.5(6), 12.5(2)
	14.5(2), 16.5(2), 18.5(2), 20.5(2), 22.5(2),
B	2.5(14), 4.5(14), 6.5(14), 8.5(12), 10.5(6), 12.5(2)
	14.5(2), 16.5(2), 18.5(2), 20.5(2)
C	2.5(14), 4.5(14), 6.5(14), 8.5(12), 10.5(6), 12.5(2)
D	2.5(14), 4.5(14), 6.5(14), 8.5(4), 10.5(2), 12.5(2),
	14.5(2), 16.5(2)
E	2.5(14), 4.5(14), 6.5(14), 8.5(4), 10.5(2), 12.5(2),
	14.5(2)
F	2.5(14), 4.5(14), 6.5(12), 8.5(2), 10.5(2), 12.5(2)

GENERAL NOTES:

Designed in accordance with AASHTO LRFD Specifications.

All concrete must be Class H. Provide Class H(HPC) if shown elsewhere in plans. All reinforcing bars must be Grade 60.

When shown on this sheet, the Fabricator has the option of furnishing either the designed depressed strand girder or an approved optional design. All optional design submittals must be signed, sealed and dated by a registered Professional Engineer.

Optional designs for girders 120 feet or longer must have a calculated residual camber equal to or greater than that of the designed girder.

Prestress losses for the designed girders have been calculated for a relative humidity of percent. Optional designs must likewise conform.

For depressed strand designed girders, strands must be located as low as possible on the 2" grid system unless a Non-Standard Strand Pattern is indicated. Fill row "2.5", then row "4.5", then row "6.5", etc., beginning each row in the "A" position and working outward until the required number of strands is reached. All strands in the "A" position must be depressed, maintaining the 2" spacing so that, at the girder ends, the upper two strands are in the position shown in the table.

Strands for the designed girder must be low relaxation strands pretensioned to 75 percent of fpu each.

Seal cracks in girder ends exceeding 0.005" in width as directed by the Engineer. The fabricator is permitted to decrease the spacing of Bars R and S by providing additional bars to help limit crack width provided the decreased spacing results in no less than 1" clear between bars. The fabricator must take an approved corrective action if cracks greater than 0.005" form on a repetitive basis.

① Based on the following allowable stresses (ksi):

Compression = 0.65 f'ci

Tension = $0.24\sqrt{f'ci}$

Optional designs must likewise conform.

② Portion of full HL93.

③ Full-length debonded strands are only permitted in strand positions marked Δ. Double wrap full-length debonded strands in outermost position of each row. Full-length debonding must comply with Item 426.4.F.4.

HL93 LOADING

TBPE REGISTRATION NO. F-1475

STATE OF TEXAS
NESTOR R. RUBIANO
94294
LICENSED
PROFESSIONAL ENGINEER

7/06/2012

Texas Department of Transportation
Bridge Division

PRESTRESSED CONCRETE I-GIRDER DESIGNS (NON-STANDARD SPANS)

IGND

FILE: igndsfe1.dgn	DN: JMH	CK: TxDOT	DW: JTR	CK: TxDOT
©TxDOT June 2007	DISTRICT	FEDERAL AID PROJECT		SHEET
REVISIONS 02/09: General Notes. 10/09: General Notes. 12/10: Rel Strgth & LLDF.	FTW	(SEE TITLE SHEET)		1809
	COUNTY	CONTROL	SECT	JOB	HIGHWAY
	TARRANT	14	16	255	IH 35W

DISCLAIMER:
The use of this standard is governed by the "Texas Engineering Practice Act". No warranty of any kind is made by TxDOT for any purpose whatsoever. TxDOT assumes no responsibility for the conversion of this standard to other formats or for incorrect results or damages resulting from its use.

LEVELS DISPLAYED | ACC:

DESIGNED GIRDERS (DEPRESSED STRANDS)

STRUCTURE	SPAN NO.	GIRDER NO.	GIRDER TYPE	PRESTRESSING STRANDS: NON-STD STRAND PATTERN	TOTAL NO.	SIZE (in)	STRGTH fpu (ksi)	"e" ℄ (in)	"e" END (in)	DEPRESSED NO.	DEPRESSED TO (in)	CONCRETE: RELEASE STRGTH ① f'ci (ksi)	MINIMUM 28 DAY COMP STRGTH f'c (ksi)
BFC NBML	1	1	Tx46		16	½	270	17.35	17.35	4	4.5	4.000	5.000
	1	2	Tx46		16	½	270	17.35	17.35	4	4.5	4.000	5.000
	1	3	Tx46		16	½	270	17.35	17.35	4	4.5	4.000	5.000
	1	4-6	Tx46		16	½	270	17.35	17.35	4	4.5	4.000	5.000
	1	16	Tx46		12	½	270	17.60	17.60	2	2.5	4.000	5.000
	1	17	Tx46		12	½	270	17.60	17.60	2	2.5	4.000	5.000
	2	1	Tx46		42	½	270	15.60	10.75	6	40.5	4.400	5.250
	2	2	Tx46		46	½	270	15.26	9.69	8	40.5	4.600	5.500
	2	3	Tx46		44	½	270	15.42	9.24	8	42.5	4.300	5.500
	2	4-7	Tx46		42	½	270	15.60	10.75	6	40.5	4.400	5.100
	2	17	Tx46		30	½	270	16.40	14.00	6	18.5	4.000	5.000
	2	18	Tx46		36	½	270	15.94	11.94	6	30.5	4.000	5.000
	3	1	Tx46		20	½	270	17.00	16.20	4	8.5	4.000	5.000
	3	2	Tx46		22	½	270	16.88	15.42	4	12.5	4.000	5.000
	3	3	Tx46		22	½	270	16.88	15.42	4	12.5	4.000	5.000
	3	4-6	Tx46		20	½	270	17.00	16.20	4	8.5	4.000	5.000
	3	16	Tx46		14	½	270	17.60	17.60	2	2.5	4.000	5.000
	3	17	Tx46		16	½	270	17.35	17.35	4	4.5	4.000	5.000
BFC SBML	1	1	Tx46		14	½	270	17.60	17.60	2	2.5	4.000	5.000
	1	2	Tx46		14	½	270	17.60	17.60	2	2.5	4.000	5.000
	1	12	Tx46		16	½	270	17.35	17.35	4	4.5	4.000	5.000
	1	13	Tx46		16	½	270	17.35	17.35	4	4.5	4.000	5.000
	1	14	Tx46		16	½	270	17.35	17.35	4	4.5	4.000	5.000
	2	1	Tx46		42	½	270	15.60	10.75	6	40.5	4.400	5.250
	2	2	Tx46		44	½	270	15.42	9.24	8	42.5	4.300	5.500
	2	12	Tx46		48	½	270	15.10	9.77	8	40.5	4.800	5.750
	2	13	Tx46		44	½	270	15.42	9.97	8	38.5	4.500	5.500
	2	14	Tx46		40	½	270	15.70	10.30	6	42.5	4.100	5.000
	3	1	Tx46		18	½	270	17.16	16.71	4	6.5	4.000	5.000
	3	2	Tx46		20	½	270	17.00	16.20	4	8.5	4.000	5.000
	3	12	Tx46		18	½	270	17.16	16.71	4	6.5	4.000	5.000
	3	13	Tx46		18	½	270	17.16	16.71	4	6.5	4.000	5.000
	3	14	Tx46		20	½	270	17.00	16.20	4	8.5	4.000	5.000
BFC NBFR	1	1	Tx40		22	½	270	14.87	13.78	4	10.5	4.000	5.000
	1	2-3	Tx40		24	½	270	14.77	13.43	4	12.5	4.000	5.000
	1	4	Tx40		20	½	270	15.00	14.20	4	8.5	4.000	5.000
	1	5-6	Tx40		20	½	270	15.00	14.20	4	8.5	4.000	5.000
	1	7	Tx40		18	½	270	15.16	14.71	4	6.5	4.000	5.000
	2	1	Tx40		18	½	270	15.16	14.71	4	6.5	4.000	5.000
	2	2-3	Tx40		18	½	270	15.16	14.71	4	6.5	4.000	5.000
	2	4	Tx40		16	½	270	15.35	15.35	4	4.5	4.000	5.000
	2	5-6	Tx40		16	½	270	15.35	15.35	4	4.5	4.000	5.000
	2	7	Tx40		16	½	270	15.35	15.35	4	4.5	4.000	5.000
	3	1	Tx40		46	½	270	13.17	8.30	8	36.5	5.200	6.150
	3	2-3	Tx40		48	½	270	13.02	8.35	8	36.5	5.400	6.250
	3	4	Tx40		38	½	270	13.81	9.08	6	36.5	4.500	5.300
	3	5-6	Tx40		38	½	270	13.81	9.08	6	36.5	4.500	5.300
	3	7	Tx40		36	½	270	13.93	9.27	6	34.5	4.300	5.100
BFC SBFR	1	1	Tx40		12	½	270	15.60	15.60	2	2.5	4.000	5.000
	1	2-3	Tx40		12	½	270	15.60	15.60	2	2.5	4.000	5.000
	1	4	Tx40		12	½	270	15.60	15.60	2	2.5	4.000	5.000
	1	5-6	Tx40		14	½	270	15.60	15.60	2	2.5	4.000	5.000
	1	7	Tx40		12	½	270	15.60	15.60	2	2.5	4.000	5.000
	2	1	Tx40		50	½	270	12.80	7.60	10	36.5	5.400	6.200
	2	2-3	Tx40		52	½	270	12.60	7.60	10	36.5	5.700	6.300
	2	4	Tx40		50	½	270	12.80	7.60	10	36.5	5.400	6.200
	2	5-6	Tx40		58	½	270	11.67	6.15	16	36.5	5.800	6.500
	2	7	Tx40		50	½	270	12.80	7.60	10	36.5	5.400	6.200
	3	1	Tx40		26	½	270	14.68	13.14	4	14.5	4.000	5.000
	3	2	Tx40		28	½	270	14.60	12.89	4	16.5	4.000	5.000
	3	3	Tx40		28	½	270	14.60	12.89	4	16.5	4.000	5.000
	3	4	Tx40		26	½	270	14.68	13.14	4	14.5	4.000	5.000
	3	5	Tx40		28	½	270	14.60	12.89	4	16.5	4.000	5.000
	3	6	Tx40		28	½	270	14.60	12.89	4	16.5	4.000	5.000
	3	7	Tx40		26	½	270	14.68	13.14	4	14.5	4.000	5.000

OPTIONAL DESIGN

STRUCTURE	SPAN NO.	GIRDER NO.	GIRDER TYPE	DESIGN LOAD COMP STRESS (TOP ℄) (SERVICE I) fct (ksi)	DESIGN LOAD TENSILE STRESS (BOTT ℄) (SERVICE III) fcb (ksi)	REQUIRED MINIMUM ULTIMATE MOMENT CAPACITY (STRENGTH I) (ft-kips)	LIVE LOAD DISTRIBUTION FACTOR ② Moment	LIVE LOAD DISTRIBUTION FACTOR ② Shear
BFC NBML	1	1	Tx46	1.229	-1.445	2646	0.843	0.961
	1	2	Tx46	1.292	-1.531	2764	0.842	0.960
	1	3	Tx46	1.291	-1.529	2760	0.841	0.958
	1	4-6	Tx46	1.283	-1.494	2702	0.841	0.958
	1	16	Tx46	1.054	-1.088	1978	0.550	0.640
	1	17	Tx46	1.089	-1.156	2008	0.618	0.644
	2	1	Tx46	3.093	-3.264	5341	0.671	0.885
	2	2	Tx46	3.219	-3.409	5518	0.661	0.873
	2	3	Tx46	3.190	-3.368	5441	0.650	0.859
	2	4-7	Tx46	3.162	-3.270	5280	0.650	0.859
	2	17	Tx46	2.725	-2.637	4079	0.482	0.644
	2	18	Tx46	2.870	-2.898	4726	0.618	0.649
	3	1	Tx46	1.668	-1.909	3404	0.817	0.974
	3	2	Tx46	1.768	-2.029	3552	0.802	0.959
	3	3	Tx46	1.748	-1.997	3489	0.787	0.940
	3	4-6	Tx46	1.736	-1.949	3408	0.787	0.940
	3	16	Tx46	1.433	-1.448	2386	0.527	0.641
	3	17	Tx46	1.492	-1.559	2657	0.618	0.646
BFC SBML	1	1	Tx46	1.172	-1.359	2394	0.700	0.803
	1	2	Tx46	1.190	-1.389	2436	0.700	0.803
	1	12	Tx46	1.253	-1.469	2641	0.808	0.921
	1	13	Tx46	1.270	-1.499	2703	0.829	0.945
	1	14	Tx46	1.242	-1.463	2684	0.853	0.972
	2	1	Tx46	3.042	-3.289	5304	0.612	0.808
	2	2	Tx46	3.112	-3.377	5420	0.612	0.808
	2	12	Tx46	3.295	-3.537	5776	0.705	0.928
	2	13	Tx46	3.180	-3.371	5463	0.661	0.872
	2	14	Tx46	3.044	-3.160	5093	0.619	0.820
	3	1	Tx46	1.587	-1.799	3083	0.670	0.804
	3	2	Tx46	1.616	-1.841	3141	0.670	0.804
	3	12	Tx46	1.576	-1.727	2949	0.662	0.794
	3	13	Tx46	1.616	-1.794	3087	0.697	0.835
	3	14	Tx46	1.626	-1.812	3168	0.735	0.881
BFC NBFR	1	1	Tx40	1.830	-2.332	3150	0.679	0.845
	1	2-3	Tx40	1.892	-2.432	3261	0.679	0.845
	1	4	Tx40	1.789	-2.115	2781	0.650	0.810
	1	5-6	Tx40	1.758	-2.085	2720	0.620	0.775
	1	7	Tx40	1.737	-2.061	2695	0.620	0.775
	2	1	Tx40	1.507	-1.953	2679	0.698	0.846
	2	2-3	Tx40	1.550	-2.024	2758	0.698	0.846
	2	4	Tx40	1.467	-1.766	2365	0.668	0.811
	2	5-6	Tx40	1.442	-1.739	2311	0.638	0.775
	2	7	Tx40	1.422	-1.711	2280	0.638	0.775
	3	1	Tx40	3.084	-3.763	4841	0.632	0.850
	3	2-3	Tx40	3.192	-3.919	5008	0.632	0.850
	3	4	Tx40	3.012	-3.387	4214	0.605	0.815
	3	5-6	Tx40	2.958	-3.346	4137	0.578	0.779
	3	7	Tx40	2.904	-3.283	4073	0.578	0.779
BFC SBFR	1	1	Tx40	1.005	-1.266	1760	0.703	0.817
	1	2-3	Tx40	1.025	-1.296	1793	0.703	0.817
	1	4	Tx40	1.020	-1.272	1763	0.703	0.816
	1	5-6	Tx40	1.045	-1.371	1899	0.703	0.816
	1	7	Tx40	1.024	-1.331	1841	0.703	0.816
	2	1	Tx40	3.462	-3.916	4828	0.594	0.825
	2	2-3	Tx40	3.531	-3.997	4912	0.594	0.825
	2	4	Tx40	3.509	-3.907	4800	0.594	0.825
	2	5-6	Tx40	3.599	-4.268	5250	0.594	0.825
	2	7	Tx40	3.431	-4.029	4997	0.594	0.825
	3	1	Tx40	2.143	-2.592	3443	0.711	0.910
	3	2	Tx40	2.215	-2.693	3536	0.714	0.910
	3	3	Tx40	2.148	-2.605	3420	0.703	0.893
	3	4	Tx40	2.092	-2.493	3272	0.691	0.877
	3	5	Tx40	2.120	-2.675	3506	0.695	0.880
	3	6	Tx40	2.105	-2.661	3492	0.698	0.884
	3	7	Tx40	2.003	-2.519	3338	0.699	0.884

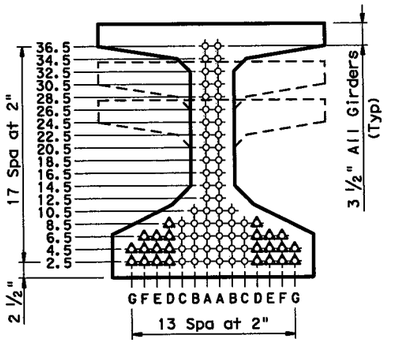

TYPE Tx28, Tx34 & Tx40③

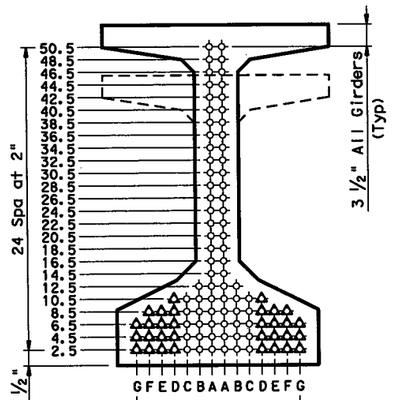

TYPE Tx46 & Tx54③

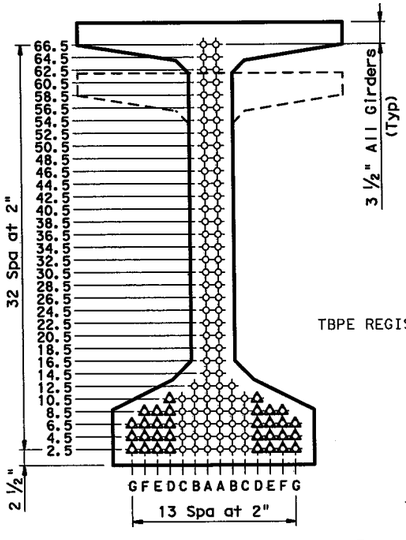

TYPE Tx62 & Tx70③

NON-STANDARD STRAND PATTERNS

PATTERN	STRAND ARRANGEMENT AT ℄ OF GIRDER

GENERAL NOTES:

Designed in accordance with AASHTO LRFD Specifications.

All concrete must be Class H. Provide Class H(HPC) if shown elsewhere in plans. All reinforcing bars must be Grade 60.

When shown on this sheet, the Fabricator has the option of furnishing either the designed depressed strand girder or an approved optional design. All optional design submittals must be signed, sealed and dated by a registered Professional Engineer.

Optional designs for girders 120 feet or longer must have a calculated residual camber equal to or greater than that of the designed girder.

Prestress losses for the designed girders have been calculated for a relative humidity of percent. Optional designs must likewise conform.

For depressed strand designed girders, strands must be located as low as possible on the 2" grid system unless a Non-Standard Strand Pattern is indicated. Fill row "2.5", then row "4.5", then row "6.5", etc., beginning each row in the "A" position and working outward until the required number of strands is reached. All strands in the "A" position must be depressed, maintaining the 2" spacing so that, at the girder ends, the upper two strands are in the position shown in the table.

Strands for the designed girder must be low relaxation strands pretensioned to 75 percent of fpu each.

Seal cracks in girder ends exceeding 0.005" in width as directed by the Engineer. The fabricator is permitted to decrease the spacing of Bars R and S by providing additional bars to help limit crack width provided the decreased spacing results in no less than 1" clear between bars. The fabricator must take an approved corrective action if cracks greater than 0.005" form on a repetitive basis.

① Based on the following allowable stresses (ksi):

Compression = 0.65 f'ci

Tension = $0.24\sqrt{f'ci}$

Optional designs must likewise conform.

② Portion of full HL93.

③ Full-length debonded strands are only permitted in strand positions marked Δ. Double wrap full-length debonded strands in outermost position of each row. Full-length debonding must comply with Item 426.4.F.4.

HL93 LOADING

Texas Department of Transportation
Bridge Division

PRESTRESSED CONCRETE I-GIRDER DESIGNS (NON-STANDARD SPANS)

TBPE REGISTRATION NO. F-1475

STATE OF TEXAS · TIMOTHY J. ROSS · 98465 · LICENSED · PROFESSIONAL ENGINEER
7/6/12

IGND

FILE: igndstel.dgn	DN: JMH	CK: TxDOT	DW: JTR	CK: TxDOT
© TxDOT June 2007	DISTRICT	FEDERAL AID PROJECT		SHEET
REVISIONS 02/09: General Notes. 10/09: General Notes. 12/10: Rel Strgth & LLDF.	FTW	(SEE TITLE SHEET)		1810
	COUNTY	CONTROL	SECT	JOB	HIGHWAY
	TARRANT	14	16	255	IH 35W

DESIGNED GIRDERS (DEPRESSED STRANDS)

STRUCTURE	SPAN NO.	GIRDER NO.	GIRDER TYPE	PRESTRESSING STRANDS: NON-STD STRAND PATTERN	TOTAL NO.	SIZE (in)	STRGTH fpu (ksi)	"e" ℄ (in)	"e" END (in)	DEPRESSED NO.	DEPRESSED TO (in)	CONCRETE: RELEASE STRGTH ① f'ci (ksi)	MINIMUM 28 DAY COMP STRGTH f'c (ksi)
BBNS	1&4	ALL	Tx54		26	1/2	270	20.08	18.24	4	16.5	4.000	5.000
BBNS	2&3	1-3	Tx54		64	1/2	270	17.26	10.13	12	50.5	5.600	6.400
BBNS	2&3	4-6	Tx54		74	1/2	270	15.87	7.76	20	50.5	5.900	7.000
BBSN	1&4	ALL	Tx54		26	1/2	270	20.08	18.24	4	16.5	4.000	5.000
BBSN	2&3	1-3	Tx54		64	1/2	270	17.26	10.13	12	50.5	5.600	6.400
BBSN	2&3	4-6	Tx54		74	1/2	270	15.87	7.76	20	50.5	5.900	7.000

OPTIONAL DESIGN

DESIGN LOAD COMP STRESS (TOP ℄) (SERVICE I) fot (ksi)	DESIGN LOAD TENSILE STRESS (BOTT ℄) (SERVICE III) fob (ksi)	REQUIRED MINIMUM ULTIMATE MOMENT CAPACITY (STRENGTH I) (ft-kips)	LIVE LOAD DISTRIBUTION FACTOR ② Moment	Shear
1.926	-2.200	4789	0.760	0.892
4.311	-4.143	8012	0.463	0.635
4.468	-4.451	8625	0.476	0.635
1.926	-2.200	4789	0.760	0.892
4.311	-4.143	8012	0.463	0.635
4.468	-4.451	8625	0.476	0.635

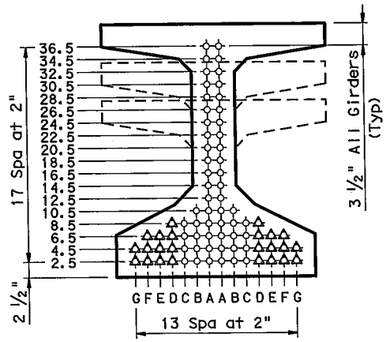

TYPE Tx28, Tx34 & Tx40 ③

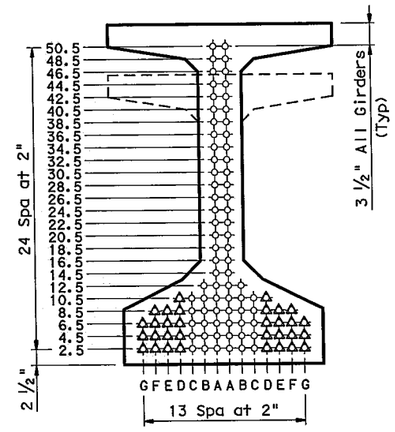

TYPE Tx46 & Tx54 ③

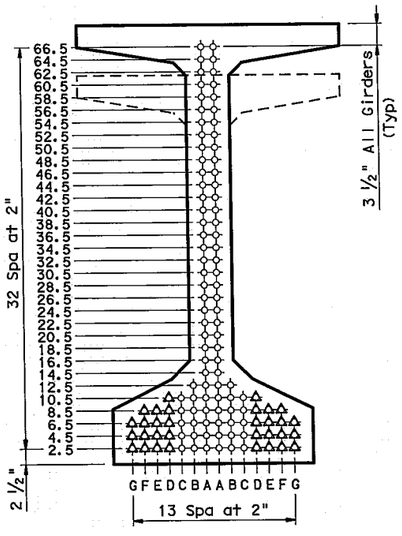

TYPE Tx62 & Tx70 ③

NON-STANDARD STRAND PATTERNS

PATTERN	STRAND ARRANGEMENT AT ℄ OF GIRDER

GENERAL NOTES:

Designed in accordance with AASHTO LRFD Specifications.

All concrete must be Class H. Provide Class H(HPC) if shown elsewhere in plans. All reinforcing bars must be Grade 60.

When shown on this sheet, the Fabricator has the option of furnishing either the designed depressed strand girder or an approved optional design. All optional design submittals must be signed, sealed and dated by a registered Professional Engineer.

Optional designs for girders 120 feet or longer must have a calculated residual camber equal to or greater than that of the designed girder.

Prestress losses for the designed girders have been calculated for a relative humidity of 65 percent. Optional designs must likewise conform.

For depressed strand designed girders, strands must be located as low as possible on the 2" grid system unless a Non-Standard Strand Pattern is indicated. Fill row "2.5", then row "4.5", then row "6.5", etc., beginning each row in the "A" position and working outward until the required number of strands is reached. All strands in the "A" position must be depressed, maintaining the 2" spacing so that, at the girder ends, the upper two strands are in the position shown in the table.

Strands for the designed girder must be low relaxation strands pretensioned to 75 percent of fpu each.

Seal cracks in girder ends exceeding 0.005" in width as directed by the Engineer. The fabricator is permitted to decrease the spacing of Bars R and S by providing additional bars to help limit crack width provided the decreased spacing results in no less than 1" clear between bars. The fabricator must take an approved corrective action if cracks greater than 0.005" form on a repetitive basis.

① Based on the following allowable stresses (ksi):

Compression = 0.65 f'ci

Tension = $0.24\sqrt{f'ci}$

Optional designs must likewise conform.

② Portion of full HL93.

③ Full-length debonded strands are only permitted in strand positions marked Δ. Double wrap full-length debonded strands in outermost position of each row. Full-length debonding must comply with Item 426.4.F.4.

HL93 LOADING

DISCLAIMER:
The use of this standard is governed by the "Texas Engineering Practice Act". No warranty of any kind is made by TxDOT for any purpose whatsoever. TxDOT assumes no responsibility for the conversion of this standard to other formats or for incorrect results or damages resulting from its use.

LEVELS DISPLAYED

ACC:

1

STATE OF TEXAS
THOMAS G. ASHCRAFT
81411
REGISTERED PROFESSIONAL ENGINEER

Thomas G. Ashcraft
7/5/12

Texas Department of Transportation
Bridge Division

PRESTRESSED CONCRETE I-GIRDER DESIGNS (NON-STANDARD SPANS)

IGND

FILE:	ignds1e1.dgn	DN: JMH	CK: TxDOT	DW: JTR	CK: TxDOT
© TxDOT	June 2007	DISTRICT	FEDERAL AID PROJECT		SHEET
REVISIONS		FTW			1811
02/09: General Notes.		COUNTY	CONTROL	SECT	JOB	HIGHWAY
10/09: General Notes.		TARRANT	0014	16	255	IH 35W
12/10: Rel Strgth & LLDF.						

DESIGNED GIRDERS (DEPRESSED STRANDS)

STRUCTURE	SPAN NO.	GIRDER NO.	GIRDER TYPE	PRESTRESSING STRANDS: NON-STD STRAND PATTERN	TOTAL NO.	SIZE (in)	STRGTH fpu (ksi)	"e" ℄ (in)	"e" END (in)	DEPRESSED NO.	DEPRESSED TO (in)	CONCRETE: RELEASE STRGTH ① f'ci (ksi)	MINIMUM 28 DAY COMP STRGTH f'c (ksi)
SB ENTRANCE RAMP TO MANAGED LANES	1	1	Tx54		62	½	270	17.46	11.01	10	50.5	5.600	6.200
	1	2-4	Tx54		56	½	270	17.94	10.79	10	50.5	5.000	5.800
	2	1-4	Tx54		60	½	270	17.61	10.94	10	50.5	5.400	6.200
	3	1-4	Tx54		60	½	270	17.61	10.94	10	50.5	5.400	6.100
	6	1-4	Tx54		60	½	270	17.61	10.94	10	50.5	5.400	6.100
	7	1-4	Tx54		56	½	270	17.94	10.79	10	50.5	5.000	5.800
	8	1-4	Tx54		58	½	270	17.77	10.87	10	50.5	5.200	6.000
NB EXIT RAMP FROM MANAGED LANES	1	1-4	Tx54		62	½	270	17.46	11.01	10	50.5	5.600	6.200
	2	1-4	Tx54		60	½	270	17.61	10.94	10	50.5	5.400	6.100
	3	1-4	Tx54		60	½	270	17.61	10.94	10	50.5	5.400	6.100
	4	1	Tx54		66	½	270	17.07	10.52	12	48.5	5.800	6.400
	4	2-4	Tx54		60	½	270	17.61	10.94	10	50.5	5.400	6.100
	8	1-4	Tx54		60	½	270	17.61	10.94	10	50.5	5.400	6.100
	9	1-4	Tx54		56	½	270	17.94	10.79	10	50.5	5.000	5.800
	10	1-4	Tx54		58	½	270	17.77	10.87	10	50.5	5.200	6.000

OPTIONAL DESIGN

STRUCTURE	SPAN NO.	GIRDER NO.	GIRDER TYPE	DESIGN LOAD COMP STRESS (TOP ℄) (SERVICE I) fot (ksi)	DESIGN LOAD TENSILE STRESS (BOTT ℄) (SERVICE III) fob (ksi)	REQUIRED MINIMUM ULTIMATE MOMENT CAPACITY (STRENGTH I) (ft-kips)	LIVE LOAD DISTRIBUTION FACTOR ② Moment	LIVE LOAD DISTRIBUTION FACTOR ② Shear
SB ENTRANCE RAMP TO MANAGED LANES	1	1	Tx54	3.794	-3.977	8192	0.740	0.800
	1	2-4	Tx54	3.712	-3.797	7556	0.623	0.800
	2	1-4	Tx54	3.929	-3.990	7881	0.593	0.773
	3	1-4	Tx54	3.914	-3.969	7832	0.588	0.767
	6	1-4	Tx54	3.941	-3.975	7804	0.590	0.767
	7	1-4	Tx54	3.709	-3.772	7475	0.593	0.767
	8	1-4	Tx54	3.790	-3.851	7623	0.591	0.767
NB EXIT RAMP FROM MANAGED LANES	1	1-4	Tx54	4.014	-4.047	7938	0.588	0.767
	2	1-4	Tx54	3.918	-3.973	7840	0.588	0.767
	3	1-4	Tx54	3.915	-3.970	7835	0.588	0.767
	4	1	Tx54	4.036	-4.184	8546	0.704	0.767
	4	2-4	Tx54	3.911	-3.966	7828	0.588	0.767
	8	1-4	Tx54	3.941	-3.975	7804	0.590	0.767
	9	1-4	Tx54	3.709	-3.771	7475	0.593	0.767
	10	1-4	Tx54	3.790	-3.851	7623	0.591	0.767

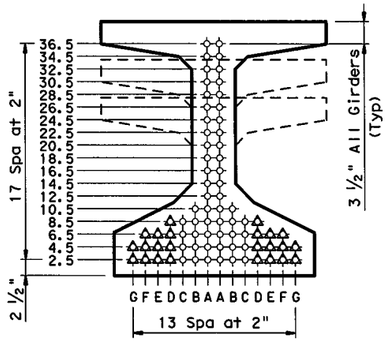

TYPE Tx28, Tx34 & Tx40 ③

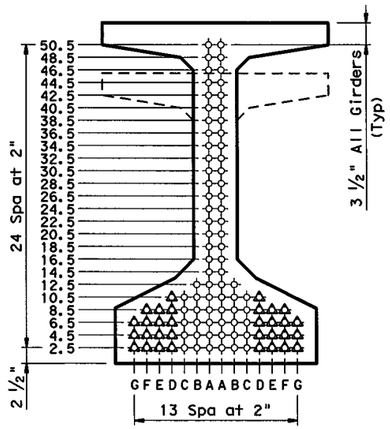

TYPE Tx46 & Tx54 ③

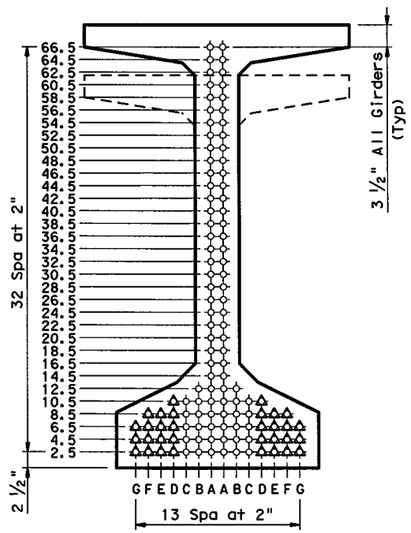

TYPE Tx62 & Tx70 ③

NON-STANDARD STRAND PATTERNS

PATTERN	STRAND ARRANGEMENT AT ℄ OF GIRDER

GENERAL NOTES:

Designed in accordance with AASHTO LRFD Specifications.

All concrete must be Class H. Provide Class H(HPC) if shown elsewhere in plans. All reinforcing bars must be Grade 60.

When shown on this sheet, the Fabricator has the option of furnishing either the designed depressed strand girder or an approved optional design. All optional design submittals must be signed, sealed and dated by a registered Professional Engineer.

Optional designs for girders 120 feet or longer must have a calculated residual camber equal to or greater than that of the designed girder.

Prestress losses for the designed girders have been calculated for a relative humidity of 65 percent. Optional designs must likewise conform.

For depressed strand designed girders, strands must be located as low as possible on the 2" grid system unless a Non-Standard Strand Pattern is indicated. Fill row "2.5", then row "4.5", then row "6.5", etc., beginning each row in the "A" position and working outward until the required number of strands is reached. All strands in the "A" position must be depressed, maintaining the 2" spacing so that, at the girder ends, the upper two strands are in the position shown in the table.

Strands for the designed girder must be low relaxation strands pretensioned to 75 percent of fpu each.

Seal cracks in girder ends exceeding 0.005" in width as directed by the Engineer. The fabricator is permitted to decrease the spacing of Bars R and S by providing additional bars to help limit crack width provided the decreased spacing results in no less than 1" clear between bars. The fabricator must take an approved corrective action if cracks greater than 0.005" form on a repetitive basis.

① Based on the following allowable stresses (ksi):

Compression = 0.65 f'ci

Tension = $0.24\sqrt{f'ci}$

Optional designs must likewise conform.

② Portion of full HL93.

③ Full-length debonded strands are only permitted in strand positions marked Δ. Double wrap full-length debonded strands in outermost position of each row. Full-length debonding must comply with Item 426.4.F.4.

STATE OF TEXAS
CORBETT L. FREEMAN
86913
LICENSED
PROFESSIONAL ENGINEER

HL93 LOADING

DISCLAIMER:
The use of this standard is governed by the "Texas Engineering Practice Act". No warranty of any kind is made by TxDOT for any purpose whatsoever. TxDOT assumes no responsibility for the conversion of this standard to other formats or for incorrect results or damages resulting from its use.

LEVELS DISPLAYED
1 2 3 4 5 6 7 8 9 10 11 12 13 30 41 51 61
7 11 81 92 02 12 22 32 42 52 62 72 82 92 03 13 32
33 43 53 63 73 83 94 04 14 24 34 44 54 64 74 84 8
95 05 15 25 35 45 55 65 75 85 96 06 16 26 36

ACC:

Texas Department of Transportation
Bridge Division

PRESTRESSED CONCRETE I-GIRDER DESIGNS (NON-STANDARD SPANS)

IGND

FILE: igndstel.dgn	DN: JMH	CK: TxDOT	DW: JTR	CK: TxDOT
©TxDOT June 2007	DISTRICT	FEDERAL AID PROJECT		SHEET
REVISIONS 02/09: General Notes. 10/09: General Notes. 12/10: Rel Strgth & LLDF.	FTW			1812
	COUNTY	CONTROL	SECT	JOB	HIGHWAY
	TARRANT	0014	16	255	IH 35W

DESIGNED GIRDERS (DEPRESSED STRANDS)

STRUCTURE	SPAN NO.	GIRDER NO.	GIRDER TYPE	PRESTRESSING STRANDS								CONCRETE	
				NON-STD STRAND PATTERN	TOTAL NO.	SIZE (in)	STRGTH fpu (ksi)	"e" ℄ (in)	"e" END (in)	DEPRESSED NO.	DEPRESSED TO (in)	RELEASE STRGTH ① f'ci (ksi)	MINIMUM 28 DAY COMP STRGTH f'c (ksi)
SB ENTR RAMP TO GP OVER BIG FOSSIL CREEK	1	1-4	Tx40		16	½	270	15.35	15.35	4	4.5	4.000	5.000
	2	1-4	Tx40		48	½	270	13.02	8.35	8	36.5	5.400	6.200
	3	1-4	Tx40		22	½	270	14.87	13.78	4	10.5	4.000	5.000
NB EXIT RAMP FROM GP OVER BIG FOSSIL CREEK	1	1-4	Tx40		38	½	270	13.81	9.08	6	36.5	4.500	5.300
	2	1-4	Tx40		48	½	270	13.02	8.35	8	36.5	5.400	6.100
	3	1-4	Tx40		26	½	270	14.68	13.14	4	14.5	4.000	5.000

OPTIONAL DESIGN

STRUCTURE	SPAN NO.	GIRDER NO.	GIRDER TYPE	DESIGN LOAD COMP STRESS (TOP ℄) (SERVICE I) fct (ksi)	DESIGN LOAD TENSILE STRESS (BOTT ℄) (SERVICE III) fcb (ksi)	REQUIRED MINIMUM ULTIMATE MOMENT CAPACITY (STRENGTH I) (ft-kips)	LIVE LOAD DISTRIBUTION FACTOR ② Moment	LIVE LOAD DISTRIBUTION FACTOR ② Shear
SB ENTR RAMP TO GP OVER BIG FOSSIL CREEK	1	1-4	Tx40	1.416	-1.768	2375	0.665	0.806
	2	1-4	Tx40	3.387	-3.942	4892	0.587	0.812
	3	1-4	Tx40	1.873	-2.295	3017	0.637	0.809
NB EXIT RAMP FROM GP OVER BIG FOSSIL CREEK	1	1-4	Tx40	2.822	-3.316	4170	0.604	0.805
	2	1-4	Tx40	3.326	-3.877	4820	0.589	0.806
	3	1-4	Tx40	2.119	-2.567	3336	0.627	0.804

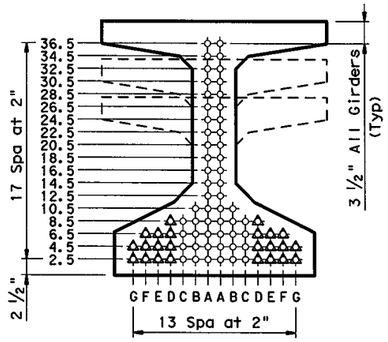

TYPE Tx28, Tx34 & Tx40 ③

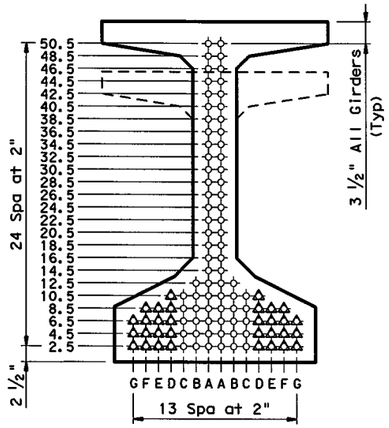

TYPE Tx46 & Tx54 ③

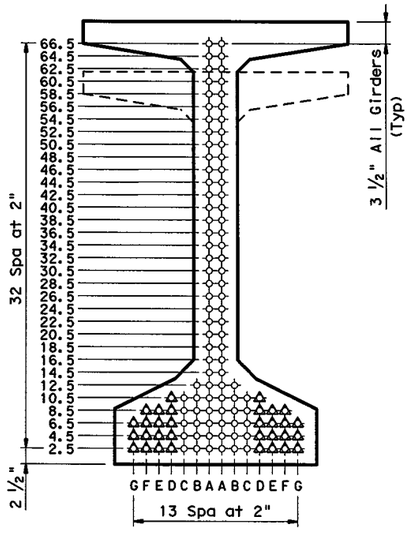

TYPE Tx62 & Tx70 ③

NON-STANDARD STRAND PATTERNS

PATTERN	STRAND ARRANGEMENT AT ℄ OF GIRDER

GENERAL NOTES:

Designed in accordance with AASHTO LRFD Specifications.

All concrete must be Class H. Provide Class H(HPC) if shown elsewhere in plans. All reinforcing bars must be Grade 60.

When shown on this sheet, the Fabricator has the option of furnishing either the designed depressed strand girder or an approved optional design. All optional design submittals must be signed, sealed and dated by a registered Professional Engineer.

Optional designs for girders 120 feet or longer must have a calculated residual camber equal to or greater than that of the designed girder.

Prestress losses for the designed girders have been calculated for a relative humidity of 65 percent. Optional designs must likewise conform.

For depressed strand designed girders, strands must be located as low as possible on the 2" grid system unless a Non-Standard Strand Pattern is indicated. Fill row "2.5", then row "4.5", then row "6.5", etc., beginning each row in the "A" position and working outward until the required number of strands is reached. All strands in the "A" position must be depressed, maintaining the 2" spacing so that, at the girder ends, the upper two strands are in the position shown in the table.

Strands for the designed girder must be low relaxation strands pretensioned to 75 percent of fpu each.

Seal cracks in girder ends exceeding 0.005" in width as directed by the Engineer. The fabricator is permitted to decrease the spacing of Bars R and S by providing additional bars to help limit crack width provided the decreased spacing results in no less than 1" clear between bars. The fabricator must take an approved corrective action if cracks greater than 0.005" form on a repetitive basis.

① Based on the following allowable stresses (ksi):

Compression = 0.65 f'ci

Tension = $0.24\sqrt{f'ci}$

Optional designs must likewise conform.

② Portion of full HL93.

③ Full-length debonded strands are only permitted in strand positions marked Δ. Double wrap full-length debonded strands in outermost position of each row. Full-length debonding must comply with Item 426.4.F.4.

7/11/12

STATE OF TEXAS
CORBETT L. FREEMAN
86913
LICENSED
PROFESSIONAL ENGINEER

HL93 LOADING

Texas Department of Transportation
Bridge Division

PRESTRESSED CONCRETE I-GIRDER DESIGNS (NON-STANDARD SPANS)

IGND

FILE: igndstel.dgn	DN: JMH	CK: TxDOT	DW: JTR	CK: TxDOT
©TxDOT June 2007	DISTRICT	FEDERAL AID PROJECT		SHEET
REVISIONS 02/09: General Notes. 10/09: General Notes. 12/10: Rel Strgth & LLDF.	FTW			1813
	COUNTY	CONTROL	SECT	JOB	HIGHWAY
	TARRANT	0014	16	255	IH 35W

DISCLAIMER:
The use of this standard is governed by the "Texas Engineering Practice Act". No warranty of any kind is made by TxDOT for any purpose whatsoever. TxDOT assumes no responsibility for the conversion of this standard to other formats or for incorrect results or damages resulting from its use.

LEVELS DISPLAYED

1	2	3	4	5	6	7	8	9	10	11	12	13	14	15	16
17	18	19	20	21	22	23	24	25	26	27	28	29	30	31	32
33	34	35	36	37	38	39	40	41	42	43	44	45	46	47	48
49	50	51	52	53	54	55	56	57	58	59	60	61	62	63	

ACC:

DISCLAIMER:
The use of this standard is governed by the "Texas Engineering Practice Act". No warranty of any kind is made by TxDOT for any purpose whatsoever. TxDOT assumes no responsibility for the conversion of this standard to other formats or for incorrect results or damages resulting from its use.

LEVELS DISPLAYED | ACC:

DESIGNED GIRDERS (DEPRESSED STRANDS)

STRUCTURE	SPAN NO.	GIRDER NO.	GIRDER TYPE	PRESTRESSING STRANDS: NON-STD STRAND PATTERN	TOTAL NO.	SIZE (In)	STRGTH fpu (ksi)	"e" @ (In)	"e" END (In)	DEPRESSED: NO.	DEPRESSED: TO (In)	CONCRETE: RELEASE STRGTH ① f'ci (ksi)	CONCRETE: MINIMUM 28 DAY COMP STRGTH f'c (ksi)
WCB NB	1	1	Tx46		26	½	270	16.681	14.835	4	16.5	4.000	5.000
	1	2	Tx46		26	½	270	16.681	14.835	4	16.5	4.000	5.000
	1	3	Tx46		26	½	270	16.681	14.835	4	16.5	4.000	5.000
	1	4	Tx46		26	½	270	16.681	14.835	4	16.5	4.000	5.000
	1	5	Tx46		26	½	270	16.681	14.835	4	16.5	4.000	5.000
	1	6	Tx46		26	½	270	16.681	14.835	4	16.5	4.000	5.000
	1	7	Tx46		26	½	270	16.681	14.835	4	16.5	4.000	5.000
	1	8	Tx46		22	½	270	16.877	15.422	4	12.5	4.000	5.000
WCB NB	2	1	Tx46		60	½	270	14.204	8.870	10	42.5	5.700	6.800
	2	2	Tx46		60	½	270	14.204	8.870	10	42.5	5.700	6.800
	2	3	Tx46		60	½	270	14.204	8.870	10	42.5	5.700	6.800
	2	4	Tx46		56	½	270	14.532	9.532	10	38.5	5.500	6.600
	2	5	Tx46		56	½	270	14.532	9.532	10	38.5	5.500	6.600
	2	6	Tx46		56	½	270	14.532	9.532	10	38.5	5.500	6.600
	2	7	Tx46		56	½	270	14.532	9.532	10	38.5	5.500	6.600
	2	8	Tx46		56	½	270	14.532	9.532	10	38.5	5.500	6.700
	2	9	Tx46		56	½	270	14.532	9.532	10	38.5	5.500	6.600
	2	10	Tx46		56	½	270	14.532	9.532	10	38.5	5.500	6.700
	2	11	Tx46		58	½	270	14.362	8.845	10	42.5	5.500	6.700
	2	12	Tx46		60	½	270	14.204	8.870	10	42.5	5.700	6.900
WCB NB	3	1	Tx46		24	½	270	16.770	15.104	4	14.5	4.000	5.000
	3	2	Tx46		24	½	270	16.770	15.104	4	14.5	4.000	5.000
	3	3	Tx46		24	½	270	16.770	15.104	4	14.5	4.000	5.000
	3	4	Tx46		24	½	270	16.770	15.104	4	14.5	4.000	5.000
	3	5	Tx46		24	½	270	16.770	15.104	4	14.5	4.000	5.000
	3	6	Tx46		24	½	270	16.770	15.104	4	14.5	4.000	5.000
	3	7	Tx46		24	½	270	16.770	15.104	4	14.5	4.000	5.000
	3	8	Tx46		22	½	270	16.877	15.422	4	12.5	4.000	5.000
WCB ML	1,3	1-4	Tx46		24	½	270	16.770	15.104	4	14.5	4.000	5.000
WCB ML	2	1,6	Tx46		52	½	270	14.835	9.912	8	40.5	5.200	6.300
	2	2-5	Tx46		60	½	270	14.204	8.870	10	42.5	5.700	7.600
WCB SB	1	1	Tx46		22	½	270	16.877	15.422	4	12.5	4.000	5.000
	1	2	Tx46		24	½	270	16.770	15.104	4	14.5	4.000	5.000
	1	3	Tx46		24	½	270	16.770	15.104	4	14.5	4.000	5.000
	1	4	Tx46		24	½	270	16.770	15.104	4	14.5	4.000	5.000
	1	5	Tx46		24	½	270	16.770	15.104	4	14.5	4.000	5.000
	1	6	Tx46		24	½	270	16.770	15.104	4	14.5	4.000	5.000
	1	7	Tx46		24	½	270	16.770	15.104	4	14.5	4.000	5.000
WCB SB	2	1	Tx46		58	½	270	14.362	9.535	10	38.5	5.700	6.800
	2	2	Tx46		54	½	270	14.715	9.974	8	40.5	5.400	6.500
	2	3	Tx46		54	½	270	14.715	9.974	8	40.5	5.400	6.500
	2	4	Tx46		54	½	270	14.715	9.974	8	40.5	5.400	6.500
	2	5	Tx46		54	½	270	14.715	9.974	8	40.5	5.400	6.500
	2	6	Tx46		54	½	270	14.715	9.974	8	40.5	5.400	6.500
	2	7	Tx46		54	½	270	14.715	9.974	8	40.5	5.400	6.600
	2	8	Tx46		58	½	270	14.362	9.535	10	38.5	5.700	6.800
	2	9	Tx46		56	½	270	14.532	9.532	10	38.5	5.500	6.600
	2	10	Tx46		62	½	270	14.055	8.894	10	42.5	5.900	7.000
WCB SB	3	1	Tx46		22	½	270	16.877	15.422	4	12.5	4.000	5.000
	3	2	Tx46		24	½	270	16.770	15.104	4	14.5	4.000	5.000
	3	3	Tx46		24	½	270	16.770	15.104	4	14.5	4.000	5.000
	3	4	Tx46		26	½	270	16.681	14.435	4	16.5	4.000	5.000
	3	5	Tx46		26	½	270	16.681	14.435	4	16.5	4.000	5.000
	3	6	Tx46		24	½	270	16.770	15.104	4	14.5	4.000	5.000

OPTIONAL DESIGN

STRUCTURE	SPAN NO.	GIRDER NO.	DESIGN LOAD COMP STRESS (TOP @) (SERVICE I) fot (ksi)	DESIGN LOAD TENSILE STRESS (BOTT @) (SERVICE III) fob (ksi)	REQUIRED MINIMUM ULTIMATE MOMENT CAPACITY (STRENGTH I) (ft-kips)	LIVE LOAD DISTRIBUTION FACTOR ②: Moment	LIVE LOAD DISTRIBUTION FACTOR ②: Shear
WCB NB	1	1	2.100	-2.279	3878.28	0.721	0.876
	1	2	2.170	-2.380	4018.79	0.721	0.876
	1	3	2.167	-2.377	4015.09	0.722	0.877
	1	4	2.144	-2.310	3908.06	0.723	0.878
	1	5	2.141	-2.307	3904.90	0.723	0.878
	1	6	2.138	-2.305	3901.89	0.724	0.879
	1	7	2.134	-2.302	3899.10	0.725	0.880
	1	8	2.014	-2.110	3514.43	0.646	0.787
WCB NB	2	1	4.351	-4.161	6152.98	0.464	0.644
	2	2	4.372	-4.198	6218.23	0.464	0.644
	2	3	4.377	-4.202	6223.34	0.464	0.644
	2	4	4.311	-4.042	5975.67	0.464	0.644
	2	5	4.316	-4.046	5980.51	0.463	0.643
	2	6	4.322	-4.051	5985.58	0.463	0.643
	2	7	4.327	-4.055	5990.64	0.463	0.643
	2	8	4.333	-4.059	5995.82	0.462	0.642
	2	9	4.339	-4.064	6001.21	0.462	0.642
	2	10	4.344	-4.069	6006.59	0.462	0.642
	2	11	4.350	-4.073	6012.09	0.461	0.641
	2	12	4.429	-4.179	6203.57	0.479	0.665
WCB NB	3	1	2.030	-2.166	3653.46	0.678	0.825
	3	2	2.105	-2.274	3806.93	0.678	0.825
	3	3	2.110	-2.278	3811.56	0.677	0.825
	3	4	2.094	-2.217	3712.00	0.676	0.824
	3	5	2.099	-2.221	3716.80	0.675	0.823
	3	6	2.104	-2.225	3721.88	0.674	0.822
	3	7	2.109	-2.229	3727.11	0.673	0.821
	3	8	2.029	-2.096	3455.20	0.615	0.753
WCB ML	1,3	1-4	2.238	-2.221	3515.37	0.586	0.720
WCB ML	2	1,6	4.207	-3.869	5631.52	0.424	0.592
	2	2-5	4.757	-4.257	5958.85	0.408	0.572
WCB SB	1	1	2.063	-2.104	3436.92	0.589	0.727
	1	2	2.124	-2.204	3639.66	0.631	0.775
	1	3	2.121	-2.202	3636.77	0.631	0.776
	1	4	2.118	-2.200	3633.85	0.631	0.776
	1	5	2.140	-2.266	3739.88	0.632	0.776
	1	6	2.137	-2.264	3736.91	0.632	0.777
	1	7	2.089	-2.192	3632.81	0.632	0.777
WCB SB	2	1	4.411	-4.128	6084.98	0.461	0.642
	2	2	4.285	-3.946	5745.88	0.427	0.598
	2	3	4.293	-3.953	5753.30	0.427	0.597
	2	4	4.301	-3.959	5760.86	0.426	0.597
	2	5	4.309	-3.966	5768.68	0.426	0.597
	2	6	4.318	-3.972	5776.51	0.425	0.596
	2	7	4.326	-3.979	5784.47	0.425	0.596
	2	8	4.418	-4.160	6056.08	0.425	0.596
	2	9	4.367	-4.080	5901.27	0.409	0.575
	2	10	4.504	-4.291	6374.39	0.477	0.554
WCB SB	3	1	2.033	-2.102	3469.12	0.618	0.757
	3	2	2.131	-2.257	3775.38	0.678	0.828
	3	3	2.137	-2.262	3782.12	0.677	0.827
	3	4	2.165	-2.334	3896.02	0.676	0.826
	3	5	2.172	-2.340	3903.75	0.674	0.825
	3	6	2.109	-2.244	3768.57	0.674	0.825

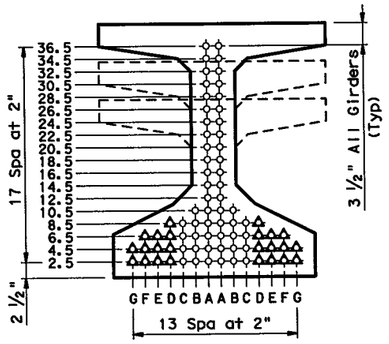

TYPE Tx28, Tx34 & Tx40③

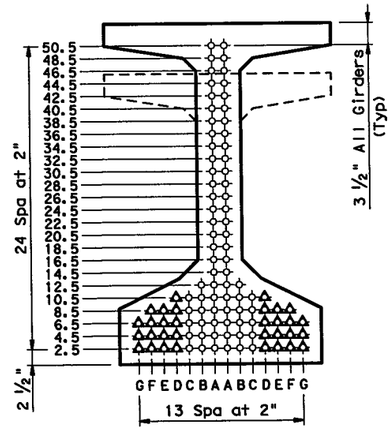

TYPE Tx46 & Tx54③

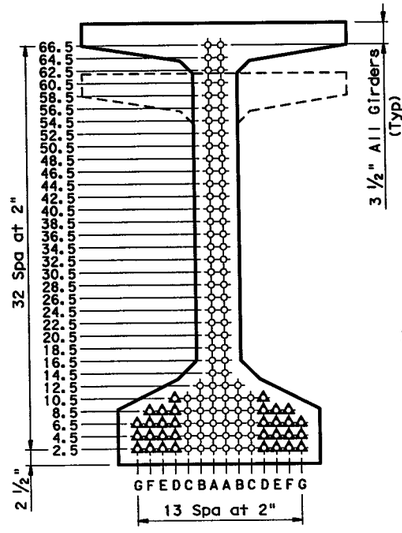

TYPE Tx62 & Tx70③

NON-STANDARD STRAND PATTERNS

PATTERN	STRAND ARRANGEMENT AT ℄ OF GIRDER

GENERAL NOTES:

Designed in accordance with AASHTO LRFD Specifications.

All concrete must be Class H. Provide Class H(HPC) if shown elsewhere in plans. All reinforcing bars must be Grade 60.

When shown on this sheet, the Fabricator has the option of furnishing either the designed depressed strand girder or an approved optional design. All optional design submittals must be signed, sealed and dated by a registered Professional Engineer.

Optional designs for girders 120 feet or longer must have a calculated residual camber equal to or greater than that of the designed girder.

Prestress losses for the designed girders have been calculated for a relative humidity of percent. Optional designs must likewise conform.

For depressed strand designed girders, strands must be located as low as possible on the 2" grid system unless a Non-Standard Strand Pattern is indicated. Fill row "2.5", then row "4.5", then row "6.5", etc., beginning each row in the "A" position and working outward until the required number of strands is reached. All strands in the "A" position must be depressed, maintaining the 2" spacing so that, at the girder ends, the upper two strands are in the position shown in the table.

Strands for the designed girder must be low relaxation strands pretensioned to 75 percent of fpu each.

Seal cracks in girder ends exceeding 0.005" in width as directed by the Engineer. The fabricator is permitted to decrease the spacing of Bars R and S by providing additional bars to help limit crack width provided the decreased spacing results in no less than 1" clear between bars. The fabricator must take an approved corrective action if cracks greater than 0.005" form on a repetitive basis.

① Based on the following allowable stresses (ksi):

Compression = 0.65 f'ci

Tension = $0.24\sqrt{f'ci}$

Optional designs must likewise conform.

② Portion of full HL93.

③ Full-length debonded strands are only permitted in strand positions marked Δ. Double wrap full-length debonded strands in outermost position of each row. Full-length debonding must comply with Item 426.4.F.4.

HL93 LOADING

SHANE W. EBBERT 102017 LICENSED PROFESSIONAL ENGINEER
7/6/12

Texas Department of Transportation
Bridge Division

PRESTRESSED CONCRETE I-GIRDER DESIGNS (NON-STANDARD SPANS)

IGND

FILE: igndstel.dgn	DN: JMH	CK: TxDOT	DW: JTR	CK: TxDOT
©TxDOT June 2007	DISTRICT	FEDERAL AID PROJECT		SHEET
REVISIONS 02/09: General Notes. 10/09: General Notes. 12/10: Rel Strgth & LLDF.	FTW	(SEE TITLE SHEET)		1814
	COUNTY	CONTROL	SECT	JOB	HIGHWAY
	TARRANT	0014	16	255	IH 35W

DISCLAIMER:
The use of this standard is governed by the "Texas Engineering Practice Act". No warranty of any kind is made by TxDOT for any purpose whatsoever. TxDOT assumes no responsibility for the conversion of this standard to other formats or for incorrect results or damages resulting from its use.

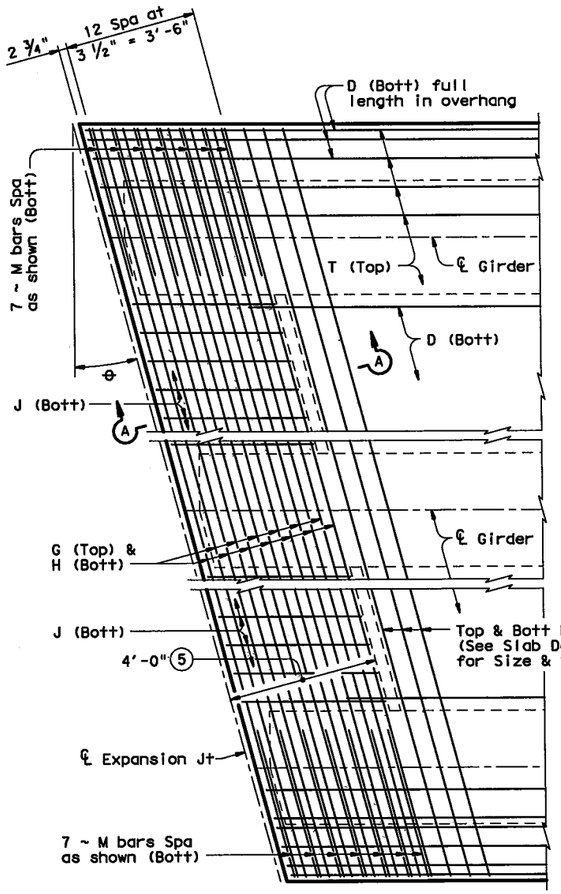

PARTIAL PLAN FOR SLABS WITHOUT BREAKBACK

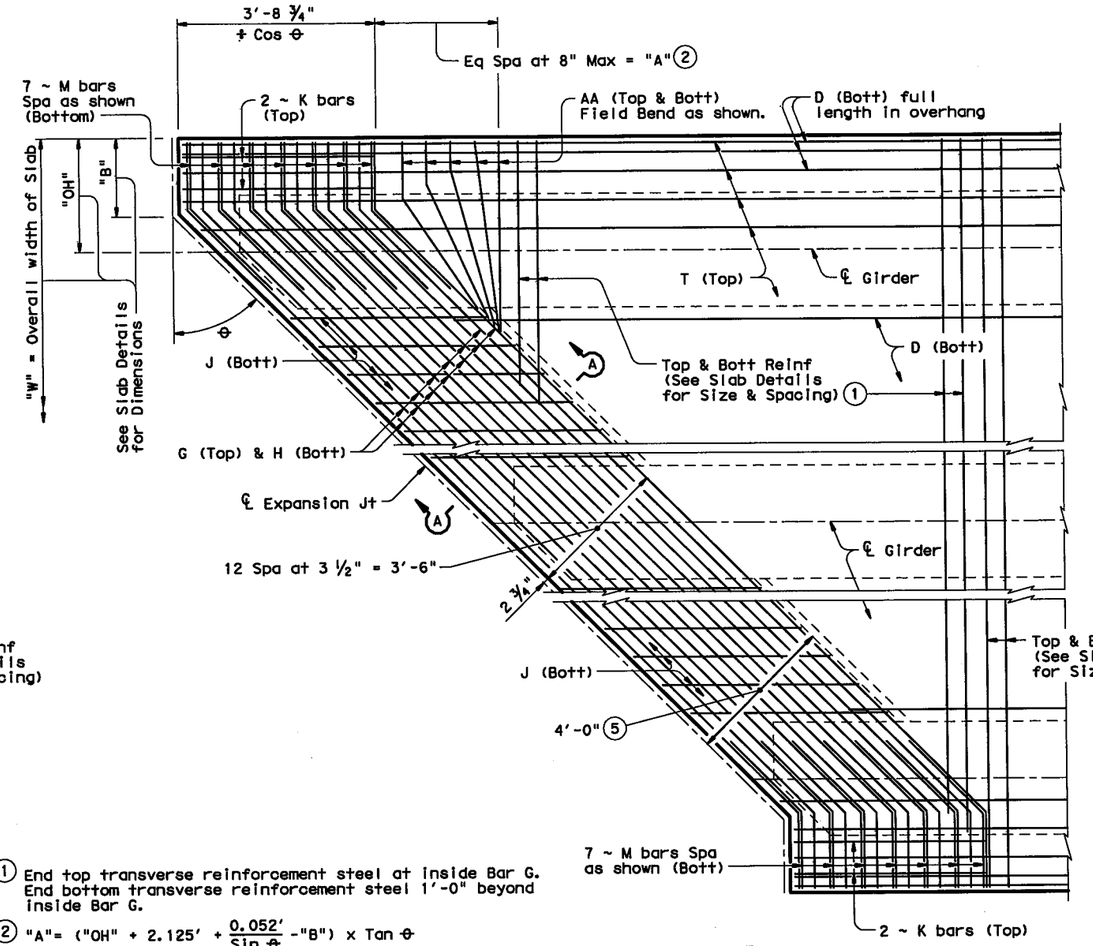

PARTIAL PLAN FOR SLABS WITH BREAKBACK

1. End top transverse reinforcement steel at inside Bar G. End bottom transverse reinforcement steel 1'-0" beyond inside Bar G.
2. "A" = ("OH" + 2.125' + $\frac{0.052'}{\text{Sin } \theta}$ - "B") x Tan θ
3. Clear Cover will be as shown unless otherwise shown on Span Details.
4. Only required on slabs with breakbacks.
5. Thickened Slab End dimensioned perpendicular to Face of Bkwl, Centerline Interior Bent or Face of Inverted-T Stem.

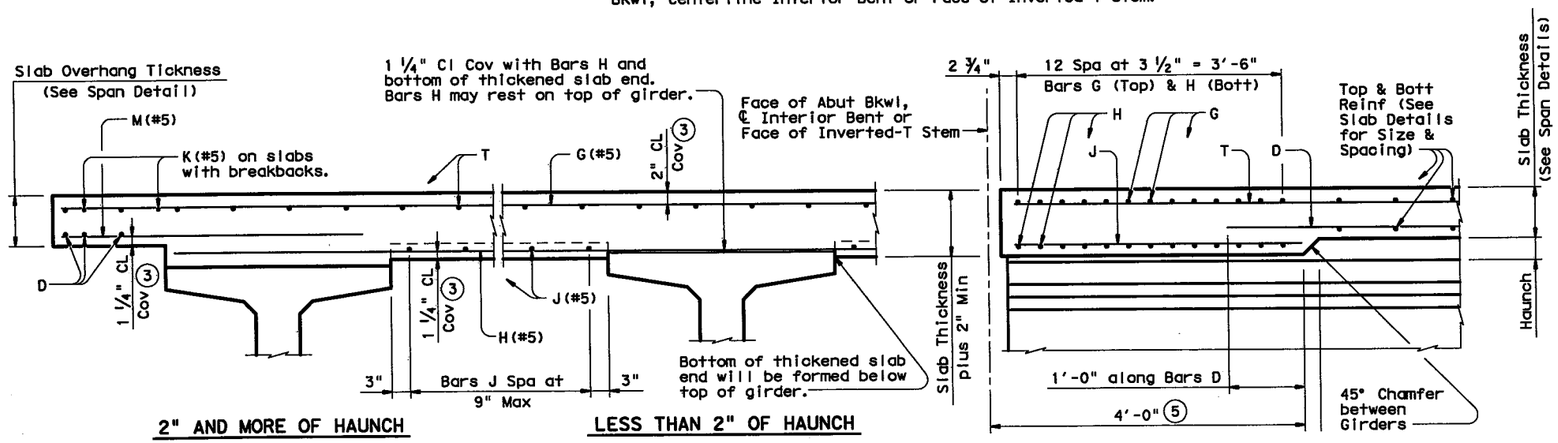

2" AND MORE OF HAUNCH — LESS THAN 2" OF HAUNCH

TYPICAL TRANSVERSE SECTION
(Showing Prestressed Conc I-Girders at ℄ Brg)

SECTION A-A
(Showing with 2" and more of Haunch)

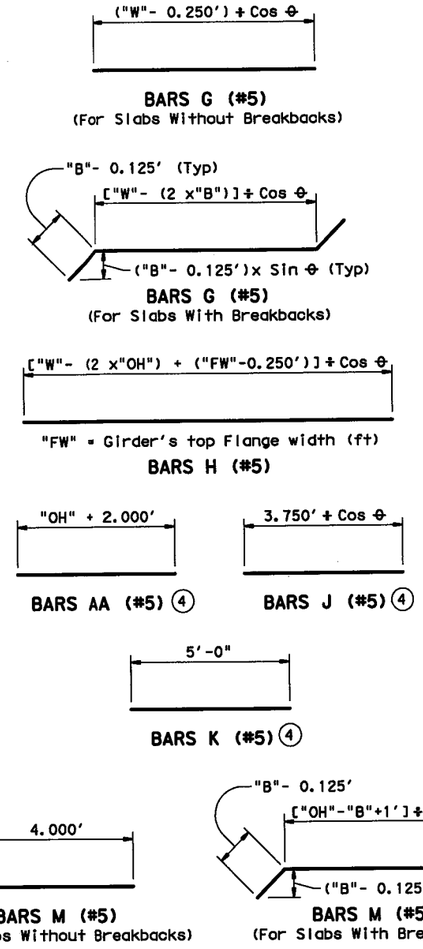

GENERAL NOTES:

Designed according to AASHTO LRFD Specifications.

These details are restricted to Prestressed Concrete I-Girder Spans.

These details are to be used in conjunction with the Span Details and Standard PCP (if prestressed concrete panels are used).

All reinforcing bars must be Grade 60 steel.

If slab reinforcing steel is shown on the Slab Details to be epoxy coated, then Bars AA, G, K, H, J and M must be epoxy coated.

Bar laps, where required, will be as follows:

Uncoated	~ #4 = 1'-5"
	~ #5 = 1'-9"
Epoxy Coated	~ #4 = 2'-1"
	~ #5 = 2'-7"

HL93 LOADING

Texas Department of Transportation
Bridge Division

THICKENED SLAB END DETAILS
PRESTRESSED CONCRETE I-GIRDER SPANS

IGTS

FILE: igtsstel.dgn	DN: TxDOT	CK: TxDOT	DW: JTR	CK: TxDOT			
©TxDOT June 2007	DISTRICT	FEDERAL AID PROJECT					SHEET
REVISIONS	FTW	(SEE TITLE SHEET)					1815
	COUNTY			CONTROL	SECT	JOB	HIGHWAY
	TARRANT			14	16	255	IH 35W

PATH:
LEVELS DISPLAYED
1

DISCLAIMER:
The use of this standard is governed by the "Texas Engineering Practice Act". No warranty of any kind is made by TxDOT for any purpose whatsoever. TxDOT assumes no responsibility for the conversion of this standard to other formats or for incorrect results or damages resulting from its use.

ACC:

LEVELS DISPLAYED

1

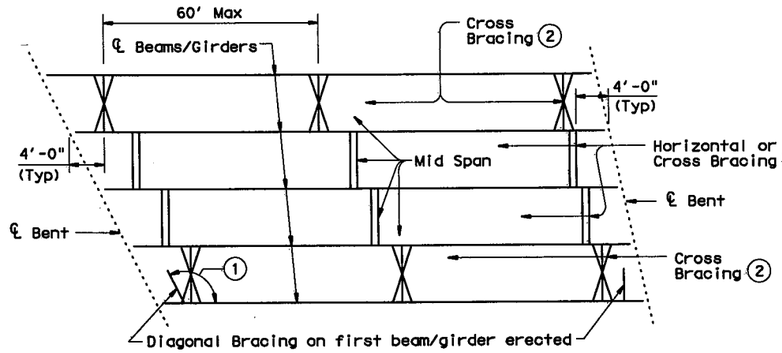

ERECTION BRACING

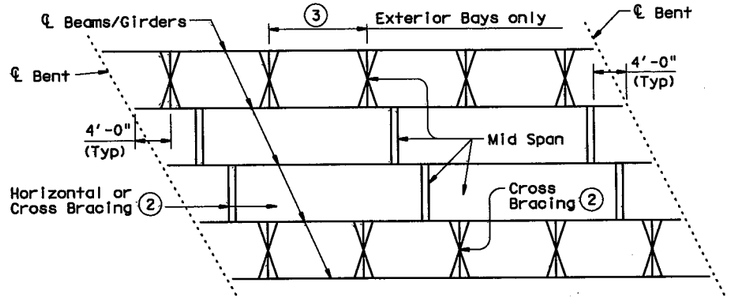

SLAB PLACEMENT BRACING

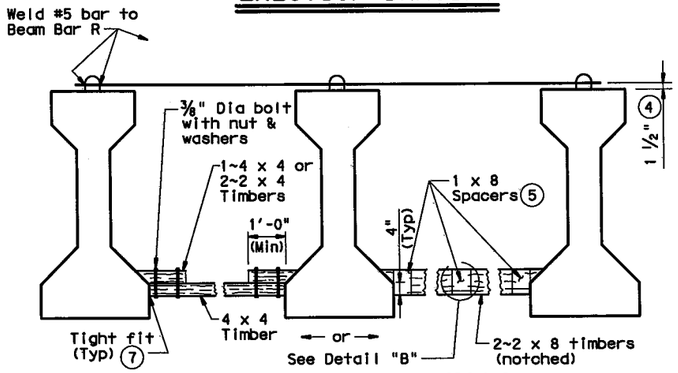

HORIZONTAL BRACING DETAILS (6)

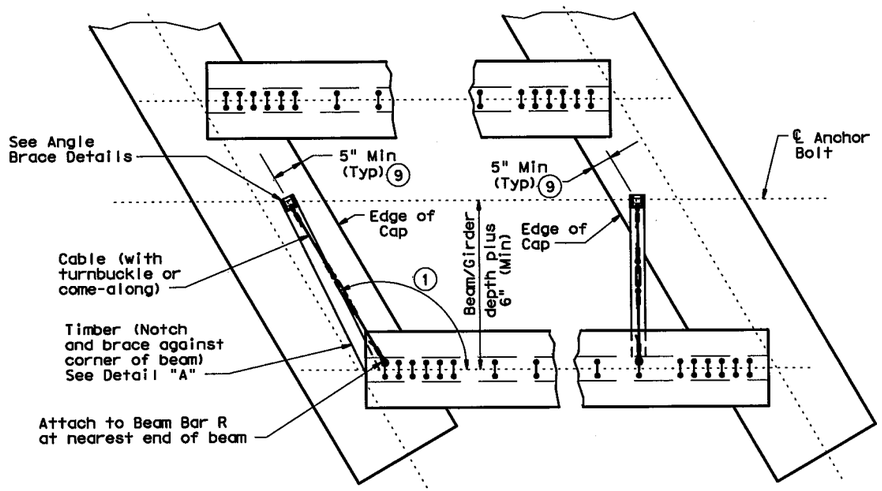

PLAN

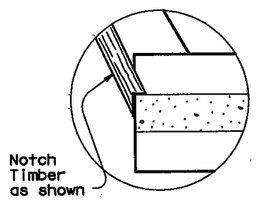

DETAIL "A"

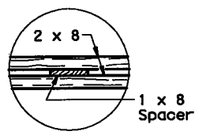

PLAN

DETAIL "B"

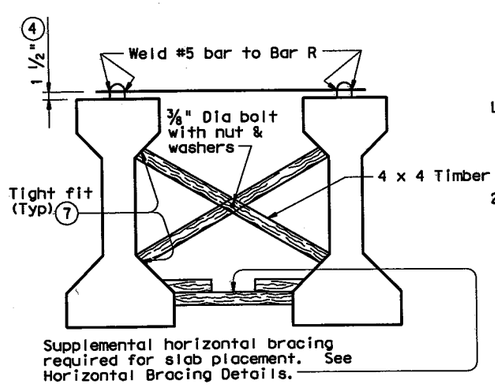

CROSS BRACING DETAIL (6)

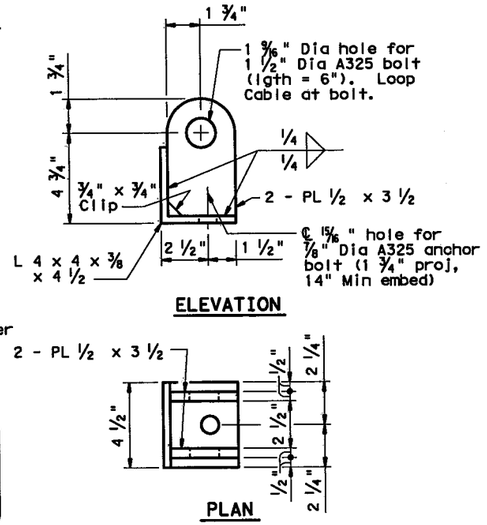

ELEVATION

PLAN

ANGLE BRACE DETAILS

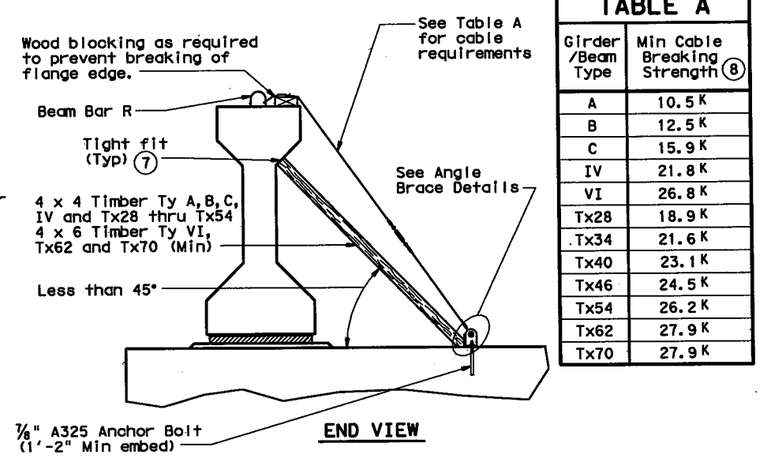

END VIEW

DIAGONAL BRACING DETAILS (6)

(To be used on both ends of the first beam/girder erected in the span.)

TABLE A	
Girder /Beam Type	Min Cable Breaking Strength (8)
A	10.5 K
B	12.5 K
C	15.9 K
IV	21.8 K
VI	26.8 K
Tx28	18.9 K
Tx34	21.6 K
Tx40	23.1 K
Tx46	24.5 K
Tx54	26.2 K
Tx62	27.9 K
Tx70	27.9 K

HAULING & ERECTION:

The Contractor's attention is directed to the possible lateral instability of prestressed concrete beams and girders over 130' long, especially during hauling and erection. The use of the following methods to improve stability is encouraged: Locate lifting devices at the maximum practical distance from beam ends; use external lateral stiffening devices during hauling and erection; lift with vertical lines using two machines; and take care in handling to minimize inertial and impact forces.

ERECTION BRACING:

Erection bracing details shown are considered the minimum for fulfilling the bracing requirements of Item 425.

Required erection bracing must be placed immediately after erection of each beam and remain in place until additional bracing as required for slab placement is in place. This standard is needed in all cases to meet requirements for Slab Placement Bracing.

SLAB PLACEMENT BRACING:

The details for slab placement bracing are considered minimum for fulfilling the requirements of Specification Item 420.

Required slab placement bracing must remain in place until slab concrete has attained a compressive strength of 3000 psi.

GENERAL NOTES:

Bracing details for closely spaced beams and girders (as on ramps or railroad structures) are not included. Details for spans longer than 150' are not provided. The Contractor must submit his proposed bracing details for such conditions to the Engineer for approval prior to erection.

Systems equal to or better than those shown may be used provided details of such systems are submitted to and approved by the Engineer prior to erection.

Use of these systems and/or details does not relieve the Contractor of the responsibility for the adequacy of the bracing and the safety of the structure.

Removal of bracing for short periods of time to align beams and girders is permissible.

All turn-buckles, come-alongs, anchors and other connections must be capable of developing the full strength of the cable shown.

(1) If angle shown exceeds 120 degrees, move diagonal brace to other side of beam/girder and place square to beam/girder. This may prevent exterior beam from being erected first.

(2) Cross bracing must be placed between the first two beams/girders erected, in exterior bays, and in every fourth bay. At the Contractor's option, remaining bays may have either cross-bracing or horizontal bracing.

(3) 15'-0" Max for Type A, B beams and Tx28 and Tx34 girders. 30'-0" Max for all others.

(4) Place and weld #5 bars as shown during erection. If forming deck with prestressed panels, bars can be temporarily removed, one at a time, during panel erection. Re-install bar prior to additional panel erection. Bars can rest on panels and be bent down and welded to Beam Bars R.

(5) Clear distance between spacers must not exceed 3'. Nail together with 16d nails.

(6) Pressure treated landscape timbers can not be used.

(7) Use wedges as necessary to obtain tight fit. Nail wedges to timbers.

(8) All hardware used with cable must be able to develop the minimum breaking strength specified. Use thimbles at all loops in cable. Install cable clamps with saddles bearing against the live end and U-bolts bearing against the dead end.

(9) It is acceptable to tie anchor bolts to cap reinforcement.

Texas Department of Transportation
Bridge Division

MINIMUM ERECTION AND BRACING REQUIREMENTS
PRESTRESSED CONCRETE I-BEAMS AND I-GIRDERS

MEBR(C)

FILE: mebastel.dgn	DN: TxDOT	CK: TxDOT	DW: TxDOT	CK: TxDOT
©TxDOT January 2005	DISTRICT	FEDERAL AID PROJECT		SHEET
REVISIONS	FTW	(SEE TITLE SHEET)		1816
06-2007: Revised "Cross Bracing Detail", Hauling, Erection Note and added I-Girders.	COUNTY	CONTROL	SECT	JOB	HIGHWAY
	TARRANT	14	16	255	IH 35W

DISCLAIMER:
The use of this standard is governed by the "Texas Engineering Practice Act". No warranty of any kind is made by TxDOT for any purpose whatsoever. TxDOT assumes no responsibility for the conversion of this standard to other formats or for incorrect results or damages resulting from its use.

PATH:

LEVELS DISPLAYED

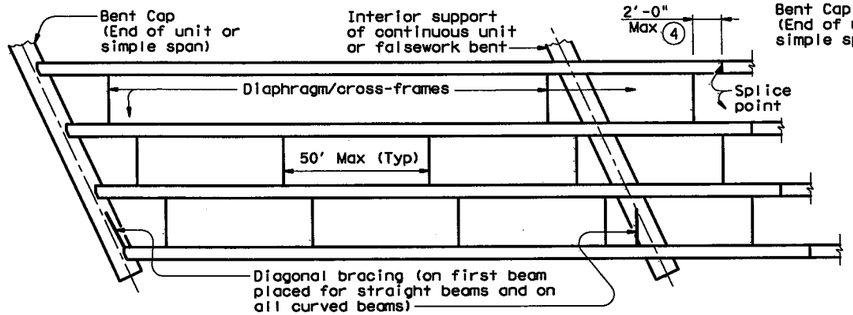

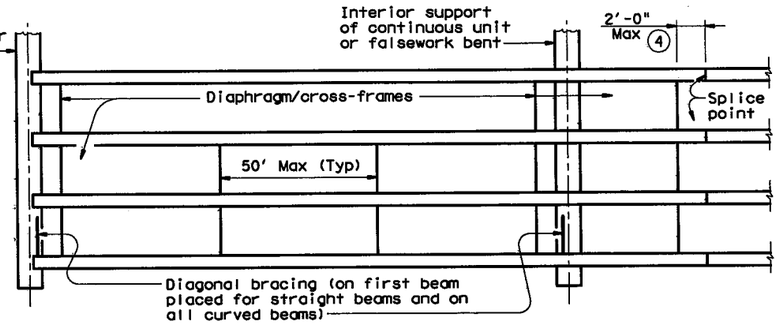

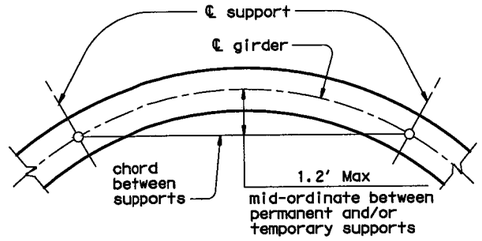

CURVED GIRDER ERECTION SUPPORT DETAIL

TYPICAL BRACING PLANS

SKEWED

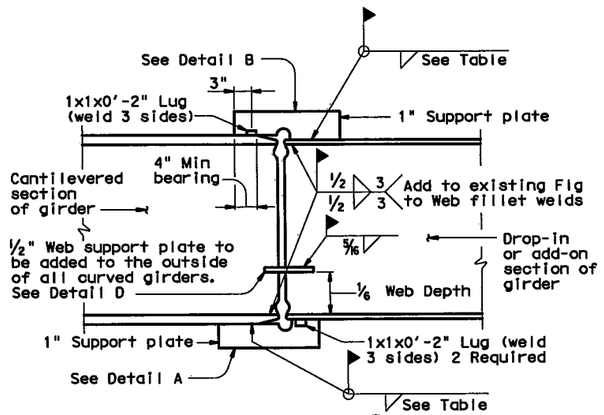

50 TON MAXIMUM (1)

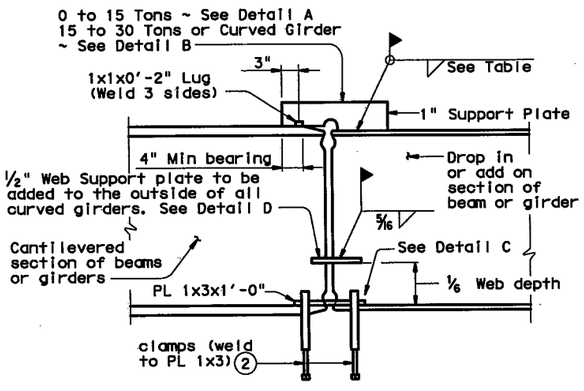

30 TON MAXIMUM (1)

NORMAL

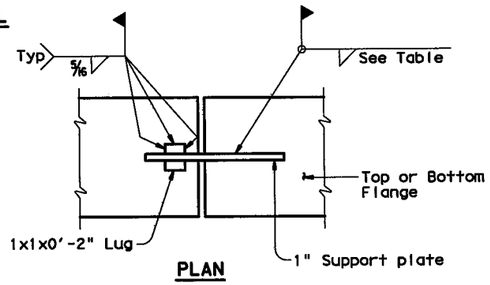

PLAN

DETAIL A

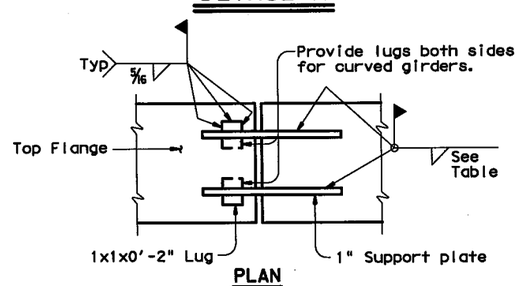

PLAN

DETAIL B

ELEVATION OF TYPICAL WELDED SPLICE SUPPORTS (3)

(1) Weights indicated are total weight of drop-in section. Special design will be required when weight of drop-in section exceeds 50 Tons or supported reaction of add-on section exceeds 25 Tons.

(2) Use extra heavy duty or extra heavy service clamps with a minimum screw diameter of ¾".

(3) All top and bottom flange support plates shall be in place before the beam or girder is erected; web plates and lugs shall be attached immediately after erection. Care shall be exercised in removing the support plates and lugs. Flange and web shall be ground smooth after their removal.

(4) Provide additional timber bracing if permanent diaphragms/cross-frames do not meet requirements shown.

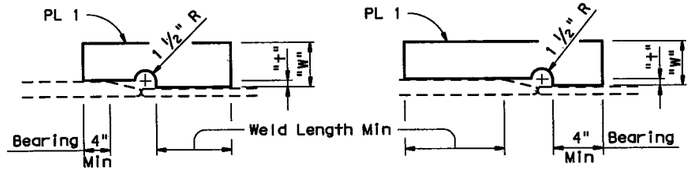

SHOWING PLATE WELDED TO THINNER OR EQUAL FLANGE

SHOWING PLATE WELDED TO THICKER FLANGE

SUPPORT PLATE DETAILS

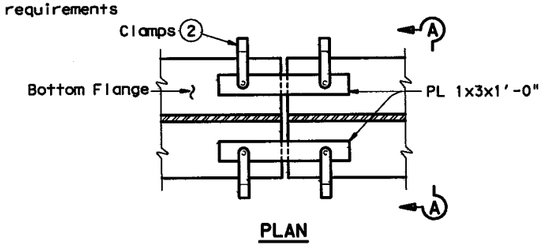

PLAN

DETAIL C

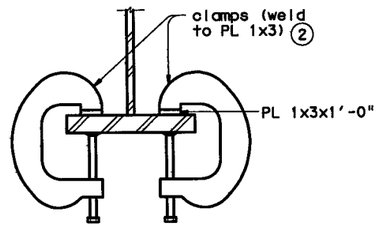

SECTION A-A

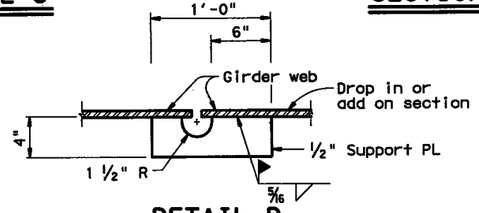

DETAIL D

Web support plates to be used for single line erection of curved girders.

"+" inches	1 PL to 15T or 2 PLs ~ 15T to 30T				3 PLs ~ 30T to 50T				
	"W"	Required Weld Length			"W"	Required Weld Length			
		5/16" Weld	3/8" Weld	7/16" Weld		5/16" Weld	3/8" Weld	7/16" Weld	½" Weld
0 to ½	6"	10"	10"	10"	7"	15"	13"	12"	10"
½ to 1 ½	8"	12"	11"	10"	9 ½"	18"	16"	14"	12"

GENERAL NOTES:

This standard is to be used as a guide in preparing the required erection drawings (see Item 441). The contractor is responsible for the adequacy of bracing and shoring at all times.

Do not use timber sections less than 4 x 4 (nominal) as brace or shoring members. Do not use pressure treated landscape timbers or timbers that are twisted, warped or cracked as brace or shoring members.

All hardware used with cables must be able to develop the cable's ultimate strength, specified on the erection drawings. Use thimbles at all loops in cable. Install cable clamps with saddles bearing on the live end and U-bolt bearing on the dead end. Do not use worn, frayed, kinked, or corroded cable.

On the erection drawings, indicate the following:

1. Assumed loads (dead, live, wind, etc.) used to design the brace and shoring members.
2. Timber species, grade, and moisture content.
3. Grade and size of steel sections used for bracing or shoring members
4. Grade and size of all threaded hardware (bolts, lag screws, concrete anchors, etc.) required for bracing and shoring.
5. Minimum embedment of concrete anchors.
6. Required weld sizes and lengths.
7. Manufacturer's name and model number of manufactured shoring or bracing.

HORIZONTALLY CURVED I-GIRDERS:

Unless shown otherwise on the erection drawings, support girder sections such that the mid-ordinate of the girder does not exceed 1.2' between support points. See "Curved Girder Erection Support Detail". Brace girders at all supports. Do not remove temporary supports until continuous girders are supported by at least three permanent supports, cross-frames or diaphragms are fully installed, and splices are completed.

When using the support plate details shown on this standard, as a minimum, use a support near the center of the girder section until the splice is completed.

Texas Department of Transportation
Bridge Division

MINIMUM ERECTION AND BRACING REQUIREMENTS

STEEL GIRDERS AND BEAMS

MEBR(S)

FILE: mebsstel.dgn	DN: TxDOT	CK: TxDOT	DW: TxDOT	CK: TxDOT
©TxDOT April 2006	DISTRICT	FEDERAL AID PROJECT		SHEET
REVISIONS	FTW	(SEE TITLE SHEET)		1817
	COUNTY	CONTROL	SECT	JOB	HIGHWAY
	TARRANT	14	16	255	IH 35W

DISCLAIMER:
The use of this standard is governed by the "Texas Engineering Practice Act". No warranty of any kind is made by TxDOT for any purpose whatsoever. TxDOT assumes no responsibility for the conversion of this standard to other formats or for incorrect results or for any damages resulting from its use.

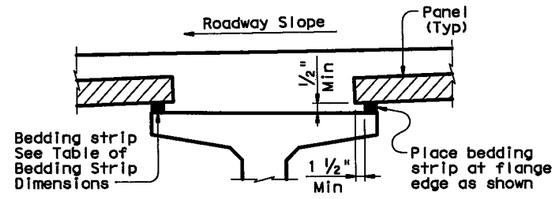

NORMAL GRADING DETAIL (1)

Showing Prestressed Concrete I-Girders.
(Other Beam Types Similar)

TABLE OF BEDDING STRIP DIMENSIONS		
WIDTH	HEIGHT (2)	
	Min	Max
1" (Min)	½"	2"
1 ¼"	½"	2 ½"
1 ½"	½"	3"
1 ¾"	½"	3 ½"
2" (Max)	½"	4"

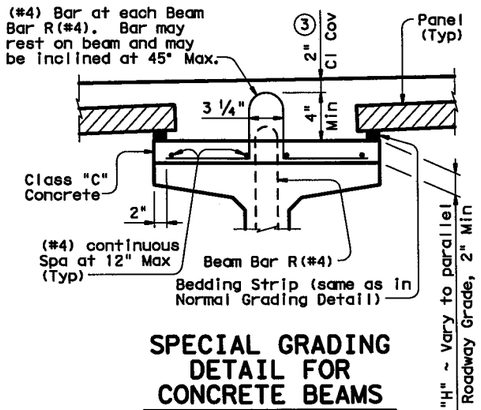

SPECIAL GRADING DETAIL FOR CONCRETE BEAMS

Showing Prestressed Concrete I-Girders.
(Other Beam Types Similar)

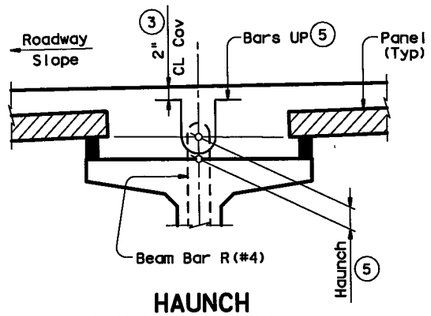

HAUNCH REINFORCING DETAIL

Showing Prestressed Concrete I-Girders.
(Other Beam Types Similar)

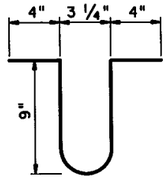

BARS UP (#4) (5)

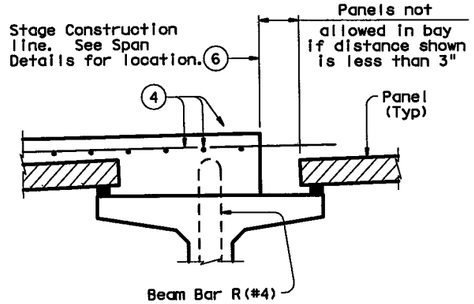

PRESTR CONC I-GIRDERS

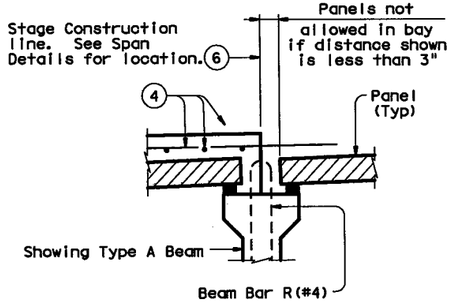

PRESTR CONC I-BEAMS

STAGE CONSTRUCTION LIMITATIONS

(Other Beam Types Similar)

(1) To reduce the quantity of cast-in-place concrete, bedding strip thickness may be increased in ¼" increments. Bedding strips must be comprised of one layer. Bond bedding strips to the beams with an adhesive compatible with bedding strips. Bedding strips over 2.5" high may need to be bonded to panels. The same thickness strip must be used under any one panel edge and the maximum change in thickness between adjacent panels is ¼". Alternatively, bedding strips may be cut to grade. Panels may be supported by an alternate method, using a commercial product, if approved by the Engineer of Bridge Design, Bridge Division.

(2) Height must not exceed twice the width.

(3) Clear cover shall be as indicated unless otherwise shown on Span Details.

(4) See Span Details for top slab reinforcement and clear cover. Longitudinal top slab reinforcement may rest on top of prestressed concrete panels if necessary to maintain clear cover.

(5) Space Bars UP(#4) with Beam Bars R(#4) in all areas where measured haunch exceeds 3" or 3 ½" with Prestressed Concrete I-Girders. Epoxy coating for Bars UP is not required.

(6) Construction Joints cannot be located on top of a panel.

(7) Butt adjacent bedding strips together with adhesive. Cut v-notches, approx ¼" deep, in the top of the bedding strips at 8' o.c..

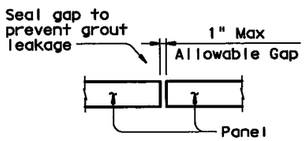

TYPICAL SECTION AT PANEL JOINT

(Panel reinforcing not shown for clarity.)
The gap cannot be considered as a panel fabrication tolerance.

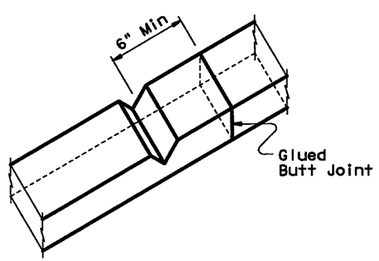

BEDDING STRIP DETAIL (7)

CONSTRUCTION NOTES:

Erected panels must bear uniformly on bedding strips of extruded polystyrene placed along top flange edges.

If additional blocking is needed, special grading details for supporting the panels and extra reinforcing between beam and slab will be considered subsidiary to deck construction.

Bars U, shown on PCP-FAB, may be bent over or cut off if necessary.

Care must be taken to ensure proper cleaning of construction debris and consolidation of concrete mortar under the edges of the panels. Bedding strips must be placed at beam flange edges so that adequate space is provided for the mortar to flow a minimum of 1 ½" under the panels as the slab concrete is placed.

To allow the proper amount of mortar to flow between beam and panel, the minimum vertical opening must be at least ½". Roadway cross-slope reduces the opening available for entry of the mortar. Bedding strips varying in thickness across the beam are therefore required.

All reinforcing steel in the cast-in-place slab must be Grade 60. See Table of Reinforcing Steel for size and spacing of reinforcement.

If the top and bottom layer of reinforcing steel is shown on the Span Details to be epoxy coated, then the D, E, P, & Z bars must be epoxy coated.

For clear span between U-beams less than or equal to 18", see Permissible Slab Forming Detail on Miscellaneous Slab Detail sheets, UBMS.

Bar Laps, where required, must be as follows:

Uncoated	~ #4	1'-5"
	~ #5	1'-9"
Epoxy Coated	~ #4	2'-1"
	~ #5	2'-7"

GENERAL NOTES:

Designed according to AASHTO LRFD Specifications.

Panel placement may follow either Option 1 or Option 2 except Option 1 must be used where the slab is continuous over inverted-T bents or if the skew exceeds 45 degrees.

Use of Prestressed Concrete Panels is not permitted for horizontally curved steel plate or tub girders. See Span Details for other possible restrictions on their use.

These details are to be used in conjunction with the Span Details, PCP-FAB and other applicable Standard sheets.

Any additional reinforcement or concrete required on this standard is to be considered subsidiary to the bid Item "Reinforced Concrete Slab".

HL93 LOADING

Texas Department of Transportation
Bridge Division

PRESTRESSED CONCRETE PANELS OPTIONAL DECK DETAILS

PCP

FILE: pcpstdet.dgn	DN: TxDOT	CK: TxDOT	DW: JTR		CK: JMH	
©TxDOT April 2006	DISTRICT	FEDERAL AID PROJECT				SHEET
REVISIONS	FTW	(SEE TITLE SHEET)				1818
08-07: Added I-Girders & added note to WWR splice detail. 10-10: Added Option 2 & referenced PCP-FAB.	COUNTY		CONTROL	SECT	JOB	HIGHWAY
	TARRANT		14	16	255	IH 35W

PATH:

LEVELS DISPLAYED

DISCLAIMER:
The use of this standard is governed by the "Texas Engineering Practice Act". No warranty of any kind is made by TxDOT for any purpose whatsoever. TxDOT assumes no responsibility for the conversion of this standard to other formats or for incorrect results or damages resulting from its use.

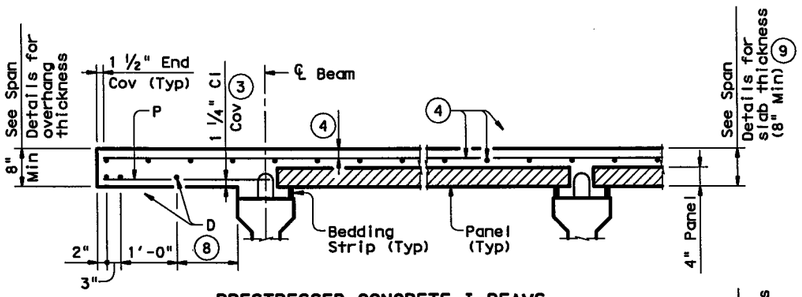

PRESTRESSED CONCRETE I-BEAMS

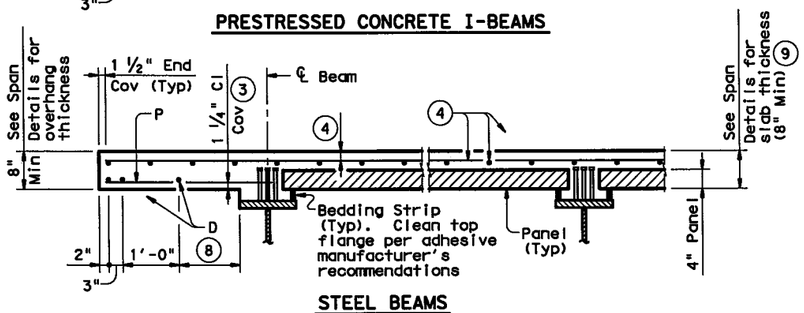

STEEL BEAMS

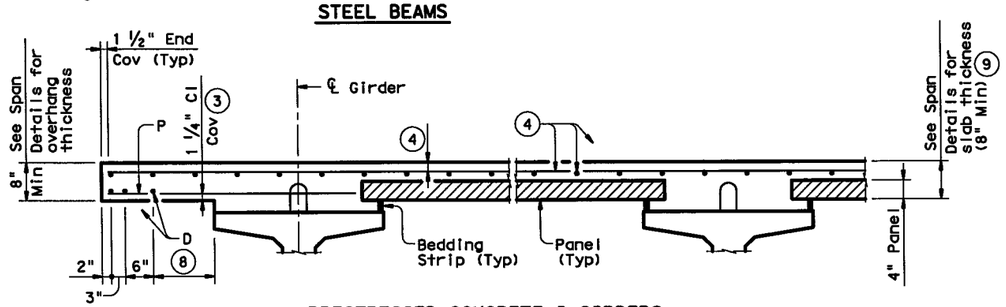

PRESTRESSED CONCRETE I-GIRDERS

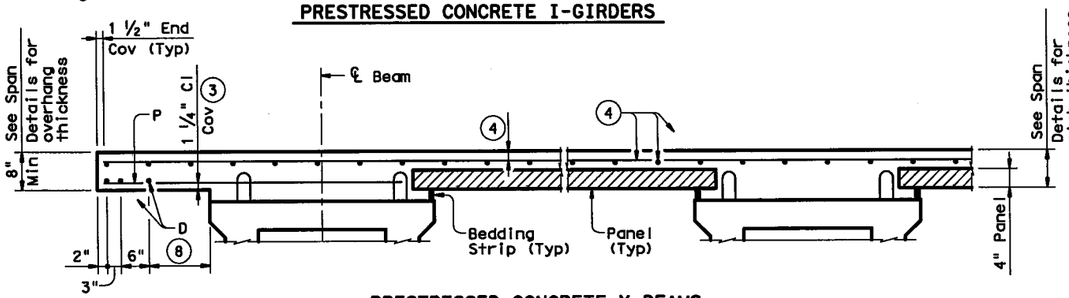

PRESTRESSED CONCRETE X-BEAMS

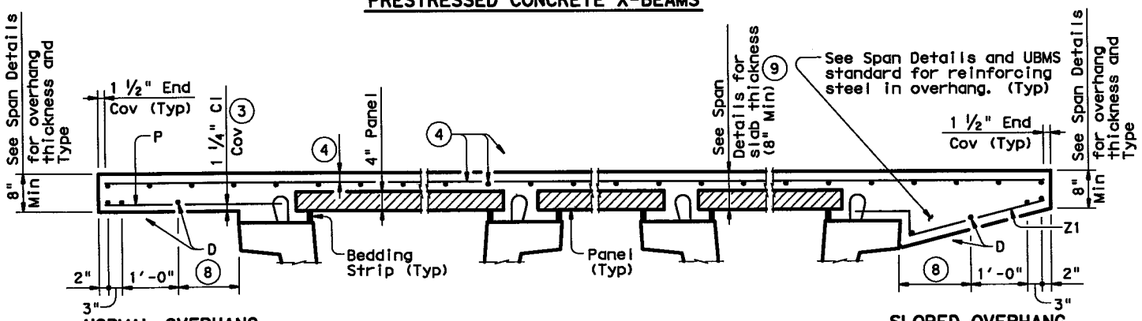

NORMAL OVERHANG WITH PRESTR CONC U-BEAMS

SLOPED OVERHANG WITH PRESTR CONC U-BEAMS

TYPICAL PART TRANSVERSE SECTIONS

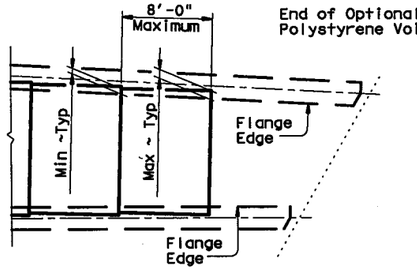

AT FLARED BEAMS OR GIRDERS

See PCP-FAB standard for Min and Max dimensions based on Bm/Girder type.

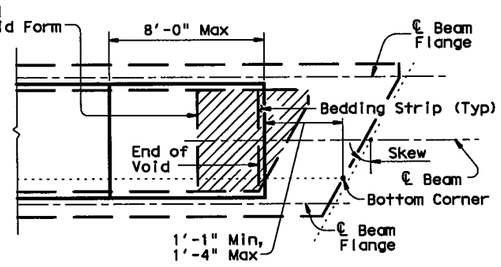

OVER CONC U-BEAMS

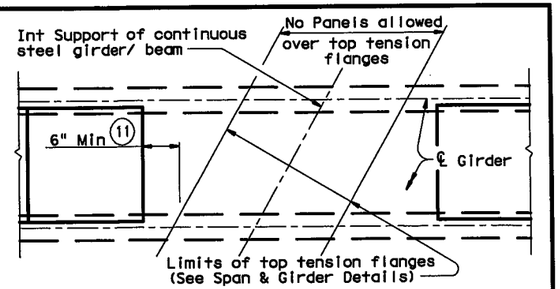

AT INT SUPPORTS OF CONTINUOUS STEEL GIRDERS

PART PLANS OF PANEL PLACEMENT

(3) Clear cover shall be as indicated unless otherwise shown on Span Details.

(4) See Span Details for top slab reinforcement and clear cover. Longitudinal top slab reinforcement may rest on top of prestressed concrete panels if necessary to maintain clear cover.

(7) Butt adjacent bedding strips together with adhesive. Cut v-notches, approx ¼" deep, in the top of the bedding strips at 8' o.c..

(8) Equally space additional bar if more than 1'-3" Max.

(9) The actual thickness constructed may exceed the slab thickness shown on the Span Details but the extra thickness shall be no more than 2" (1" for Prestressed Concrete U-Beams and Steel Beams). Bearing Seat Elevations or finished grade may be adjusted.

(10) Field adjust Bars Z1(#4) to match actual slope of slab overhangs. Width of slab overhang will vary along span with curved slab edges. Adjust Bar Z1(#4) dimensions to maintain proper cover. Bars Z2(#4) are located at Inv-T stems only.

(11) Location of concrete placement sequence boundaries and bolted field splices should be considered by the contractor in determining panel limits.

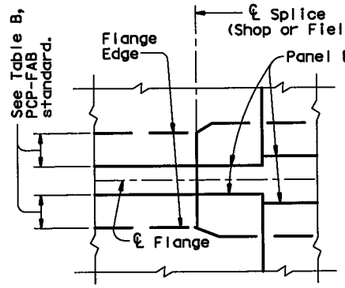

PLAN AT SPLICE

(Showing Steel Bms with flange width transition)

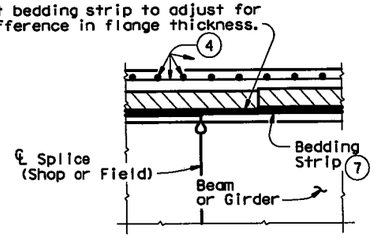

ELEVATION AT SPLICE

(Showing Steel Bms with different flange thickness)

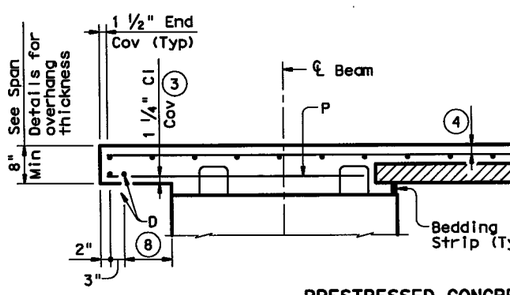

PRESTRESSED CONCRETE SPREAD SLAB BEAMS

Bars P over exterior beams are still required when no overhang is used. In this case, only one Bar D, 2" from slab edge, is required.

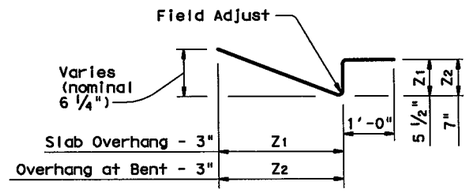

BARS Z (#4) (10)

HL93 LOADING

SHEET 2 OF 4

Texas Department of Transportation
Bridge Division

PRESTRESSED CONCRETE PANELS OPTIONAL DECK DETAILS

PCP

FILE: pcpstdei.dgn	DN: TxDOT	CK: TxDOT	DW: JTR	CK: JMH
©TxDOT April 2006	DISTRICT	FEDERAL AID PROJECT		SHEET
REVISIONS	FTW	(SEE TITLE SHEET)		1819
08-07: Added I-Girders & added note to WWR splice detail. 10-10: Added Option 2 & referenced PCP-FAB.	COUNTY	CONTROL	SECT	JOB	HIGHWAY
	TARRANT	14	16	255	IH 35W

PATH:

LEVELS DISPLAYED
1

DISCLAIMER:
The use of this standard is governed by the "Texas Engineering Practice Act". No warranty of any kind is made by TxDOT for any purpose whatsoever. TxDOT assumes no responsibility for the conversion of this standard to other formats or for incorrect results or damages resulting from its use.

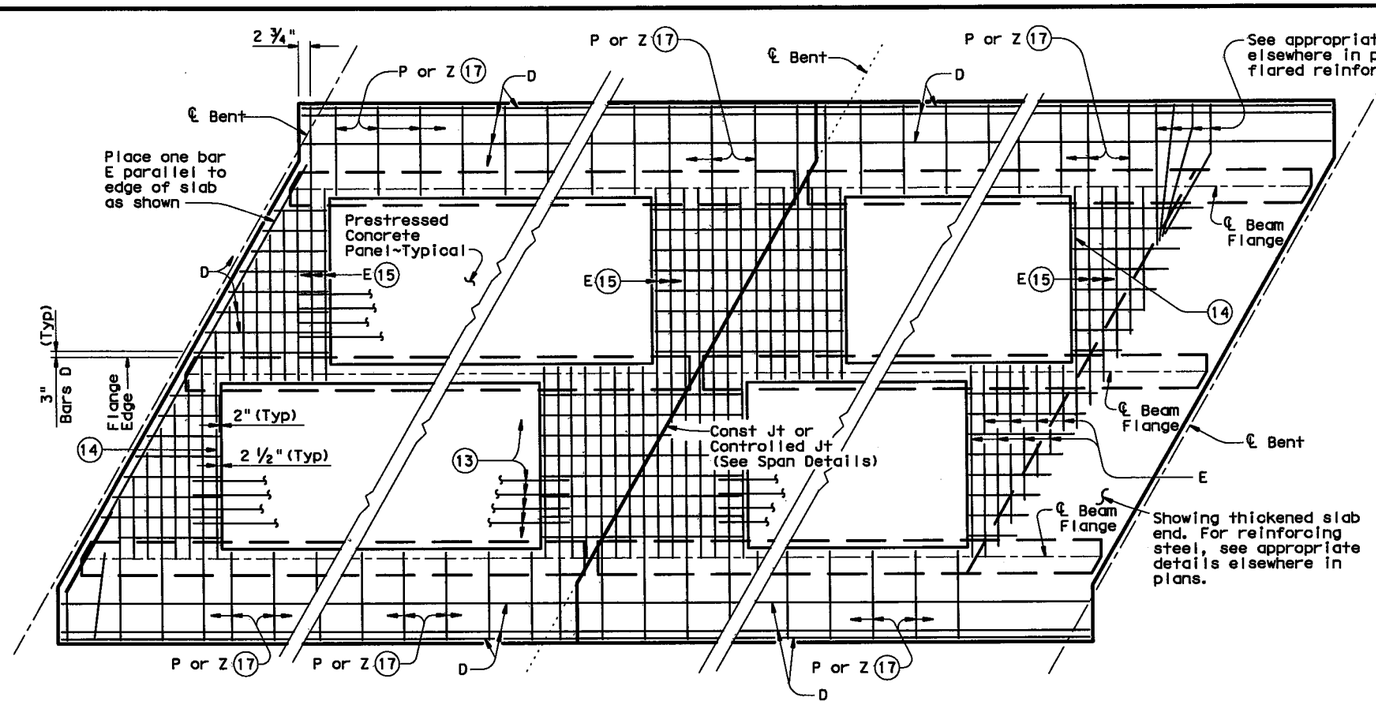

AT ALL SPAN ENDS UNLESS NOTED OTHERWISE

AT INTERIOR BENTS

AT THICKENED END SLABS

OPTION 1 ~ PLAN OF SLABS WITH NORMAL REINFORCEMENT

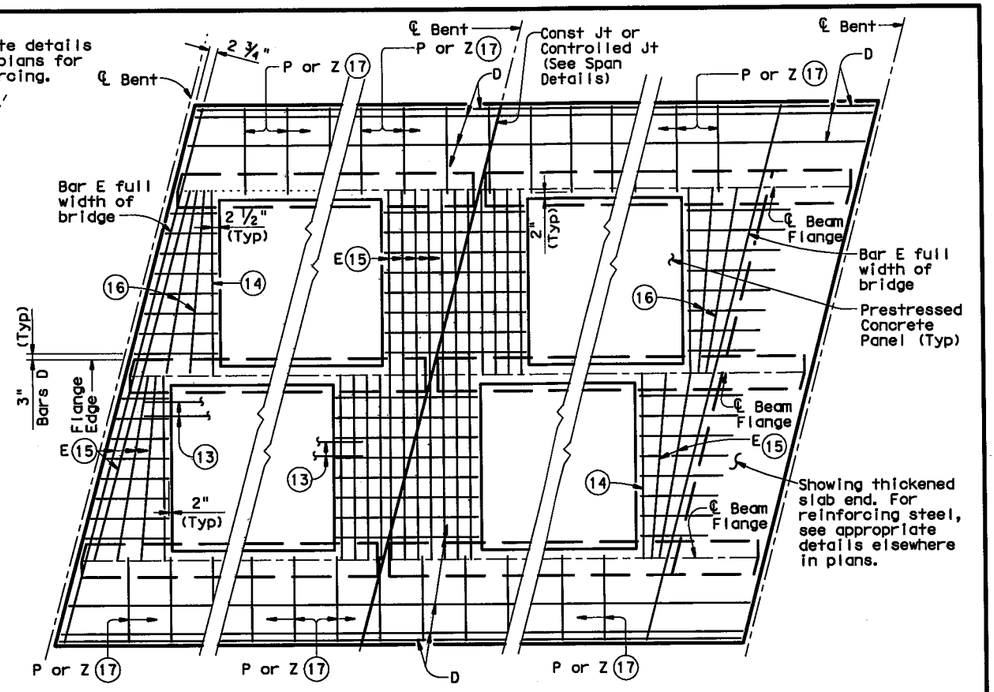

AT ALL SPAN ENDS UNLESS NOTED OTHERWISE

AT INTERIOR BENTS

AT THICKENED END SLABS

OPTION 1 ~ PLAN OF SLABS WITH SKEWED REINFORCEMENT

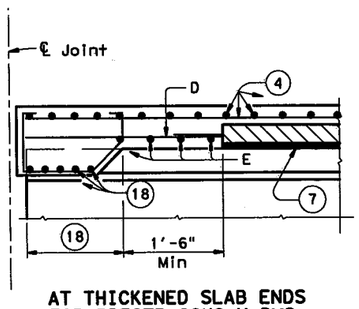

AT THICKENED SLAB ENDS FOR PRESTR CONC U-BMS

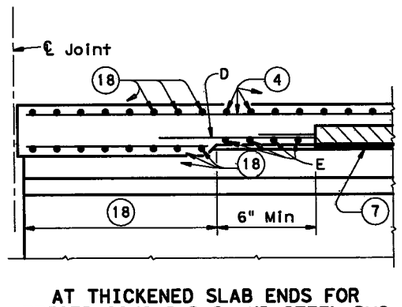

AT THICKENED SLAB ENDS FOR PRESTR CONC I-BMS AND STEEL BMS

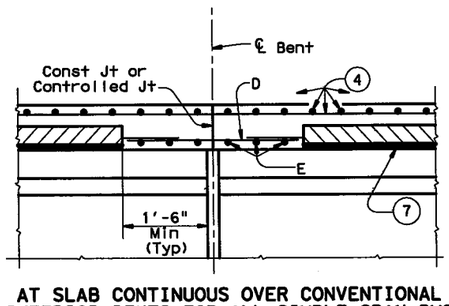

AT SLAB CONTINUOUS OVER CONVENTIONAL INTERIOR BENTS FOR ALL SIMPLE SPAN BMS

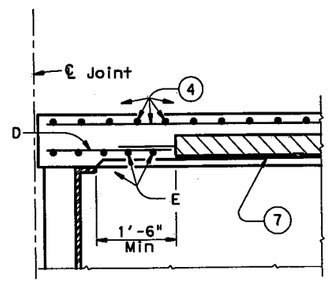

AT CONVENTIONAL END DIAPHRAGMS FOR STEEL BMS

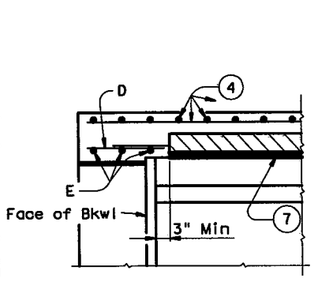

AT SLAB OVER ABUTMENT BACKWALL FOR ALL BMS

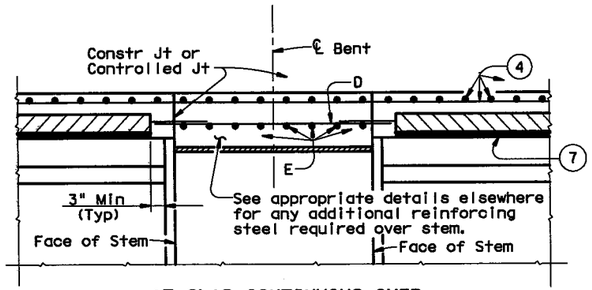

AT SLAB CONTINUOUS OVER INVERTED-T BENTS FOR ALL BMS

OPTION 1 ~ ELEVATIONS AT BEAM ENDS

(4) See Span Details for top slab reinforcement and clear cover. Longitudinal top slab reinforcement may rest on top of prestressed concrete panels if necessary to maintain clear cover.

(7) Butt adjacent bedding strips together with adhesive. Cut v-notches, approx ¼" deep, in the top of the bedding strips at 8' o.c..

(12) Max Spacing as listed unless otherwise shown.

(13) At connection with cast-in-place slab, extend longitudinal panel reinforcement. See PCP-FAB for details.

(14) Maintain one Bar E(#5) parallel to panel ends (Typ).

(15) Bars E(#5) not continuous over beam flanges must overlap beam flange 6" Min.

(16) Add flared Bars E(#5) (Min Spa = 2", Max Spa = 10") as required at panel ends.

(17) Where possible, Bars E(#5) may be extended into overhangs to replace Bars P(#4). Bars Z(#4) are required for sloped overhangs with U-Beams.

(18) See appropriate thickened slab end details for reinforcing and limits of thickened slab end.

TABLE OF REINFORCING STEEL (12)

BAR	SIZE	Max Spa (in.)
D	#5	9
E	#5	6
P	#4	18
UP	#4	~
Z	#4	18

HL93 LOADING

SHEET 3 OF 4

Texas Department of Transportation
Bridge Division

PRESTRESSED CONCRETE PANELS
OPTIONAL DECK DETAILS

PCP

FILE: pcpstdet.dgn	DN: TxDOT	CK: TxDOT	DW: JTR		CK: JMH	
©TxDOT April 2006	DISTRICT	FEDERAL AID PROJECT				SHEET
REVISIONS 08-07: Added I-Girders & added note to WWR splice detail. 10-10: Added Option 2 & referenced PCP-FAB.	FTW	(SEE TITLE SHEET)				1820
	COUNTY		CONTROL	SECT	JOB	HIGHWAY
	TARRANT		14	16	255	IH 35W

PATH:

LEVELS DISPLAYED

DISCLAIMER:
The use of this standard is governed by the "Texas Engineering Practice Act". No warranty of any kind is made by TxDOT for any purpose whatsoever. TxDOT assumes no responsibility for the conversion of this standard to other formats or for incorrect results or damages resulting from its use.

PATH:

LEVELS DISPLAYED

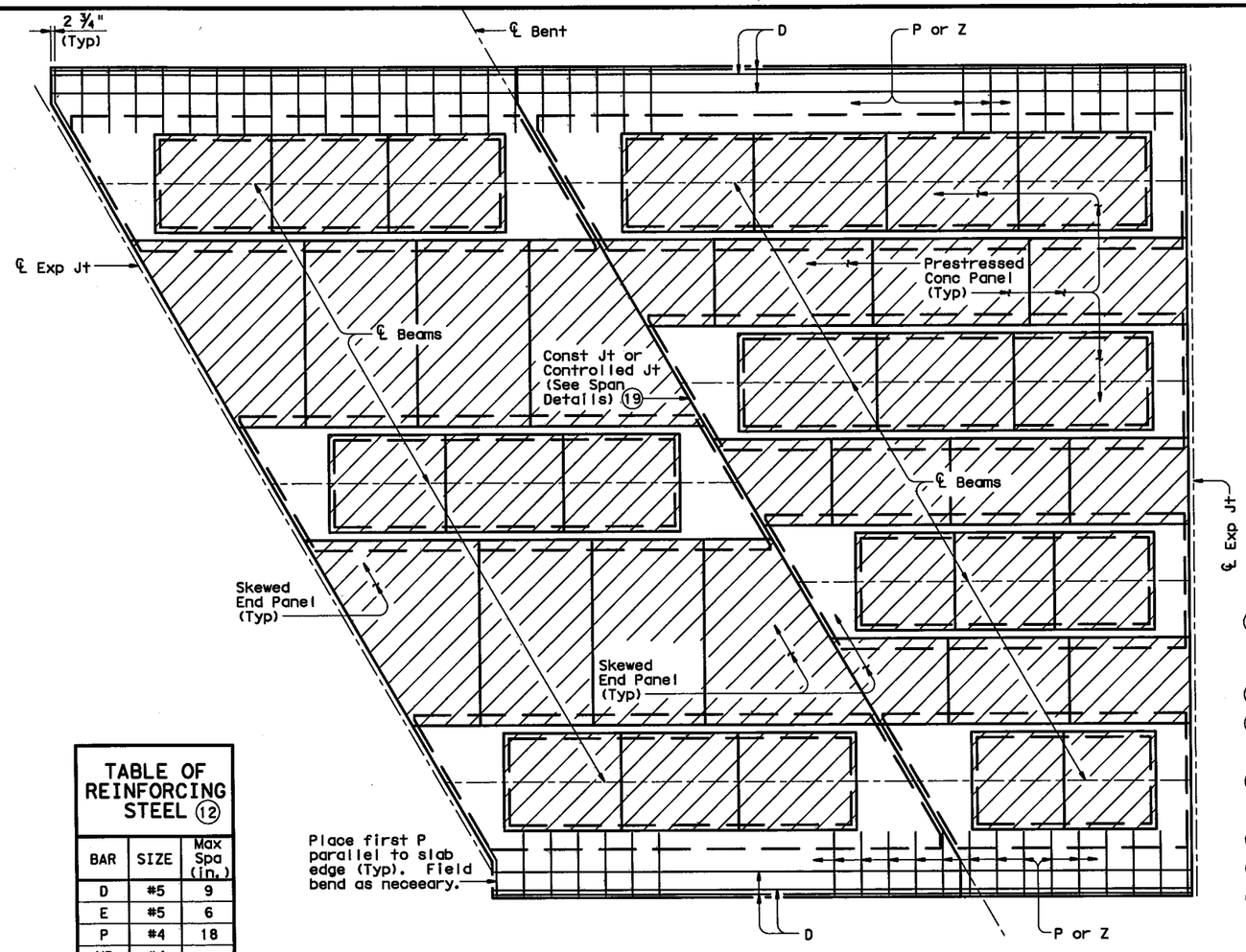

OPTION 2 ~ PLAN OF SLAB

(Showing U-Beams; other beams similar)

TABLE OF REINFORCING STEEL (12)		
BAR	SIZE	Max Spa (in.)
D	#5	9
E	#5	6
P	#4	18
UP	#4	~
Z	#4	18

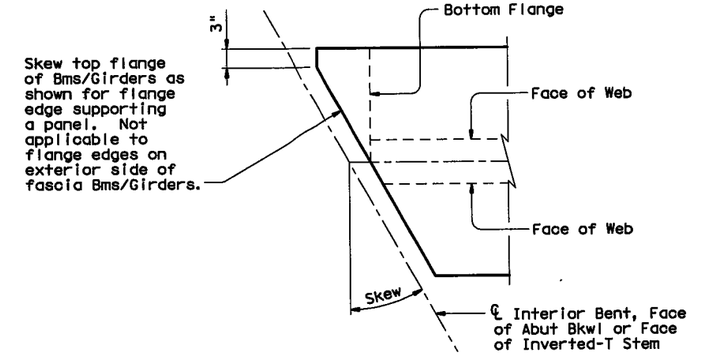

OPTION 2 ~ SHOWING MODIFICATION TO BEAM/GIRDER TOP FLANGE FOR SKEWS OVER 5°

Showing I-Bm/I-Girder, U-Bms and Steel Bms similar.

(4) See Span Details for top slab reinforcement and clear cover. Longitudinal top slab reinforcement may rest on top of prestressed concrete panels if necessary to maintain clear cover.

(12) Max Spacing as listed unless otherwise shown.

(19) Top Plastic Joint Former at Controlled Joints (Stress Cap, Zip Strip, Stress Lock, etc.) is not required with these Details.

(20) End panel may be set up to 2" lower to accommodate expansion joint hardware, provided bedding strip is not less than ½" thick.

(21) 0" Min, ¾" Max, support as necessary.

(22) Place panel within ½" of ¾" thick board.

(28) ¾" thick board, leave in place. Place straight, within ¼" of Centerline of Bent, across bridge width and end board at exterior flange edge of fascia beams/girders. Do not extend into overhang.

(29) Permanent galvanized steel sheet form. Removable formwork is acceptable.

(30) Place end panel within ½" of expansion joint opening. End panel cannot encroach on required expansion joint opening.

(31) Additional (#4) bar 5'-0" in length must be placed under slab bars A and between every slab bars T. Center (#4) bar on Joint.

SPECIAL OPTION 2 CONSTRUCTION NOTES:

Placing panels adjacent to expansion joints and bent centerlines prior to completing interior panel placement is recommended. Saw cutting panels to fit is acceptable when approved by the Engineer. Minimum distance from a saw cut edge to a panel strand is 1 ½".

Do not extend the longitudinal panel reinforcement into the cast-in-place slab.

Top flanges of beams and girders on skewed bridges must be modified as shown on this drawing. The Contractor is responsible for coordinating this modification with the beam fabricator prior to submitting shop drawings for approval.

Bending of anchor studs of expansion joints shown on standards AJ, SEJ-A and SEJ-S(0) is permissible if necessary to clear top of end panels. The Contractor is responsible for coordinating modifications with the joint fabricator. Submit shop drawings for approval when modifications to expansion joint hardware are made. These details are not applicable for bridges with expansion joints as shown on standard SEJ-P.

Bedding strips under skewed end panels must conform to the requirements of Item 425 except their minimum compressive strength must be 60 psi.

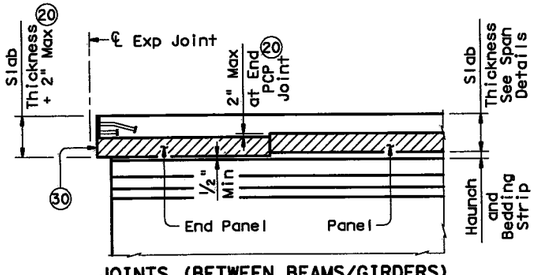

JOINTS (BETWEEN BEAMS/GIRDERS)

For SEJ-A, SEJ-S(0), AJ and Type A Expansion Joints only.

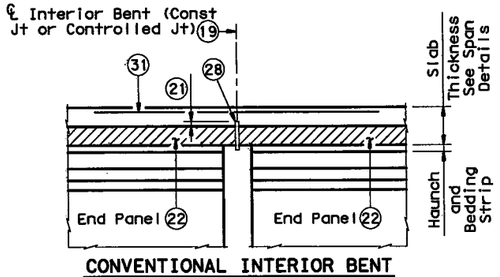

CONVENTIONAL INTERIOR BENT

Panel against Panel between Bms/Girders.

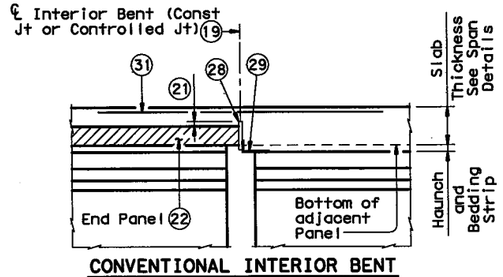

CONVENTIONAL INTERIOR BENT

Panel against Bm/Girder End in Adjacent Span.

OPTION 2 ~ ELEVATIONS AT BEAM ENDS (4)

HL93 LOADING SHEET 4 OF 4

Texas Department of Transportation
Bridge Division

PRESTRESSED CONCRETE PANELS
OPTIONAL DECK DETAILS

PCP

FILE: pcpstdet.dgn	DN: TxDOT	CK: TxDOT	DW: JTR	CK: JMH
©TxDOT April 2006	DISTRICT	FEDERAL AID PROJECT		SHEET
REVISIONS 08-07: Added I-Girders & added note to WWR splice detail. 10-10: Added Option 2 & referenced PCP-FAB.	FTW	(SEE TITLE SHEET)		1821
	COUNTY	CONTROL	SECT	JOB	HIGHWAY
	TARRANT	14	16	255	IH 35W

DISCLAIMER:
The use of this standard is governed by the "Texas Engineering Practice Act". No warranty of any kind is made by TxDOT for any purpose whatsoever. TxDOT assumes no responsibility for the conversion of this standard to other formats or for incorrect results or for damages resulting from its use.

PATH:

LEVELS DISPLAYED

1

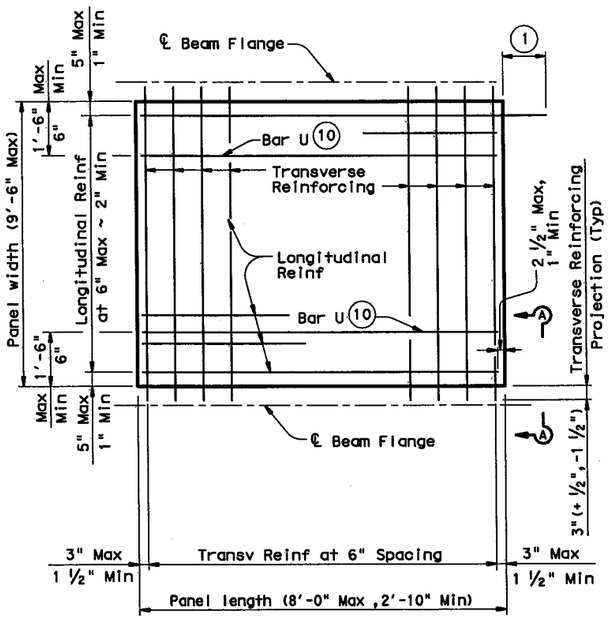

TYPICAL NON-SKEWED PANEL PLAN

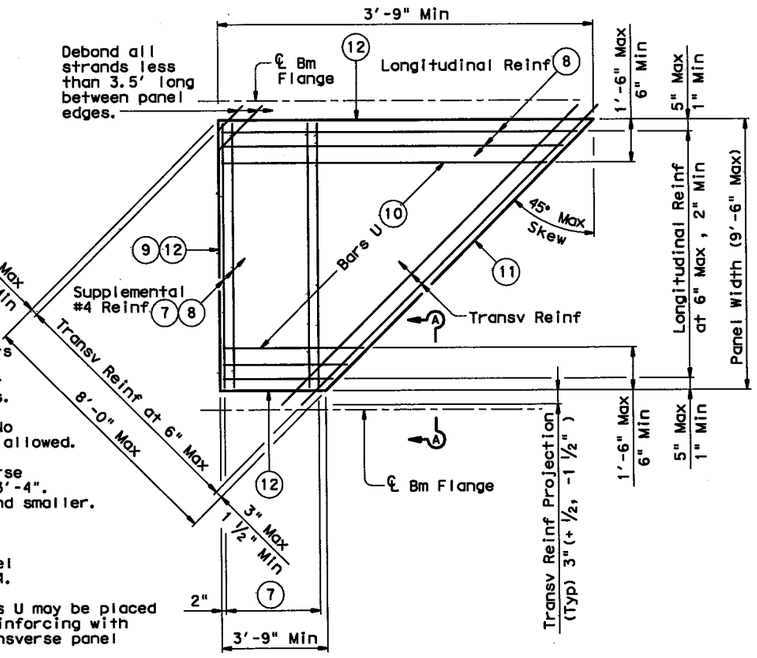

TYPICAL SKEWED END PANEL PLAN

(Only to be used with details shown elsewhere in the plans.)

1. At connection with cast-in-place slab, extend longitudinal panel reinforcement 1'-0" (+2", -0") past panel end. Alternatively, provide (#3) x 2'-0" dowels at 6" Max Spacing and extend dowels 1'-0" past panel end.
2. Four loops required per panel.
3. Four loops required per panel. 3/8" or 1/2" strands may be used.
4. Normal dimensions must be used on spans with parallel beams. Maximum and Minimum dimensions apply only to spans with flared beams.
5. See Normal Grading Detail on PCP standard for lap requirements and bedding strip dimensions. Some laps shown in tables cannot utilize all bedding strip widths.
6. One Splice allowed per panel. No more than two sheets of WWR are allowed.
7. Provide (#4) bars under transverse reinforcing, 10 Spaces at 4" = 3'-4". Omit for 5 degree (1:12) skew and smaller.
8. End Cover 2 1/2" Max, 1" Min.
9. Recess strands on indicated panel edge in accordance with Item 424.
10. At the fabricator's option, Bars U may be placed parallel to transverse panel reinforcing with horizontal legs in plane of transverse panel reinforcing.
11. Use length of indicated panel edge as panel width for purpose of determining type of transverse reinforcing.
12. Timber form work permissible this edge.

TABLE A (4)(5)			
Beam Type	Normal (In.)	Min (In.)	Max (In.)
A	3	2 1/2	3 1/2
B	3	2 1/2	3 1/2
C	4	3	4 1/2
IV	6	4	7 1/2
VI	6 1/2	4 1/2	8 1/2
U40	5 1/2	5 1/2	7
U54	5 1/2	5 1/2	7
Tx28-70	6	4	7 1/2
XB20	4	3	4 1/2
XB28	4	3	4 1/2
XB34	4	3	4 1/2
XB40	4	3	4 1/2
XSB12	4	3	4 1/2
XSB15	4	3	4 1/2

TABLE B (4)(5)			
Top Flange Width	Normal (In.)	Min (In.)	Max (In.)
11" to 12"	2 3/4	2 1/2	2 3/4
Over 12" to 15"	3 1/4	3	3 1/4
Over 15" to 18"	4	3	4 3/4
Over 18"	5	3 1/2	6 1/4

GENERAL NOTES:

All concrete for panels is to be Class H. Use Class H (HPC) concrete for panels if required elsewhere in plans. Release strength f'ci=4000 psi. Minimum 28 day strength f'c=5000 psi.

Remove laitance from top panel surface.

Finish top of panel to a roughness between a No.6 and No.9 concrete surface profile, inclusive, as specified by the International Concrete Repair Institute (ICRI).

Shop drawings for the fabrication of panels will not require the Engineer's approval if fabrication is in accordance with the details shown on this standard.

A panel layout which identifies location of each panel must be developed by the fabricator. Permanently mark each panel in accordance with the panel layout. A copy of the layout is to be provided to the Engineer.

TRANSVERSE PANEL REINFORCEMENT:

For panel widths over 5', use 3/8" or 1/2" Dia (270k) prestressing strands with a tension of 16.1 kips per strand.

For panel widths over 3'-6" up to and including 5', use 3/8" or 1/2" Dia (270k) prestressing strands with a tension of 16.1 kip per strand. Optionally, #4 Grade 60 reinforcing bars may be used in lieu of prestressed strands.

For panel widths up to 3'-6", use #4 Grade 60 reinforcing bars (prestressed strands are not allowed).

Place transverse panel reinforcement at panel centroid and space at 6" Max.

LONGITUDINAL PANEL REINFORCEMENT:

Any of the following options may be used for longitudinal panel reinforcement:

1. (#3) Grade 60 reinforcing steel at 6" Max Spacing. No splices allowed.
2. 3/8" Dia prestressing strands at 4 1/2" Max Spacing (unstressed). No splices allowed.
3. 1/2" Dia prestressing strands at 6" Max Spacing (unstressed). No splices allowed.
4. Deformed Welded Wire Reinforcement (WWR) (ASTM A497) providing 0.22 sq in per foot of panel width. Wires larger than D11 not permitted. Provide transverse wires to ensure proper handling of reinforcing. One splice per panel is allowed. See WWR Splice Detail.

No combination of longitudinal reinforcement options in a panel is allowed.

Place longitudinal panel reinforcement above or below transverse panel reinforcement. Must be placed above transverse panel reinforcement for skewed end panels with supplemental #4 reinforcement.

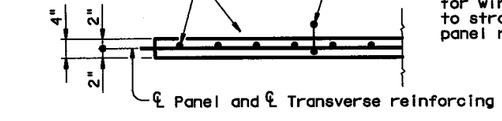

SECTION A-A

(Not Showing supplemental #4 bars for Skewed End Panels.)

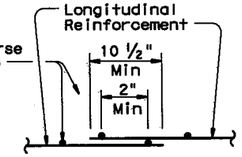

WELDED WIRE REINFORCEMENT (WWR) SPLICE DETAIL (6)

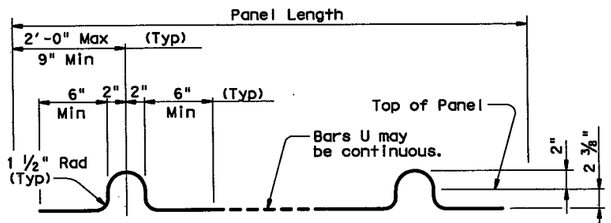

BARS U (#3) (2)

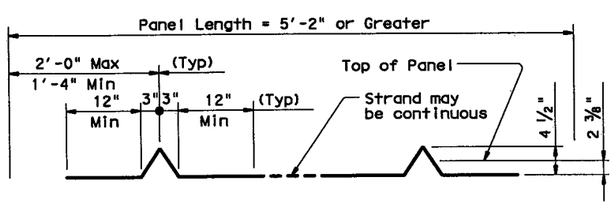

OPTIONAL STRAND FOR BARS U (3)

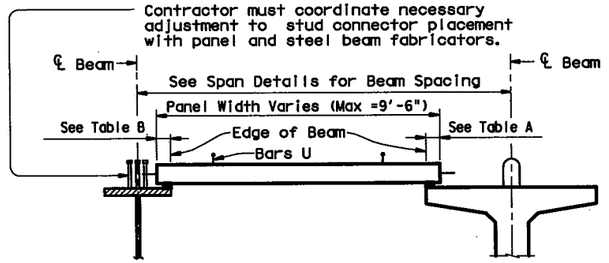

STEEL BEAMS

PRESTRESSED CONCRETE BEAMS OR GIRDERS

Typ unless noted otherwise

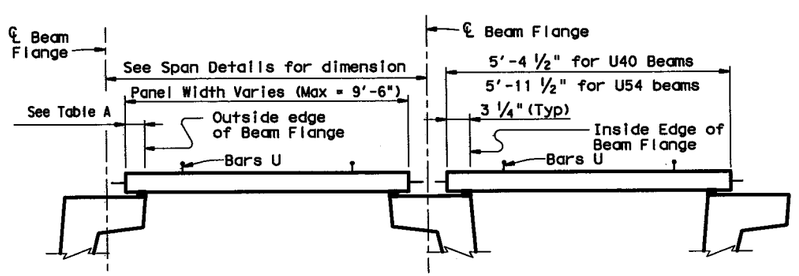

PRESTRESSED CONCRETE U-BEAMS

TYPICAL SECTIONS FOR DETERMINING PANEL WIDTH

HL93 LOADING

Texas Department of Transportation
Bridge Division

PRESTRESSED CONCRETE PANEL FABRICATION DETAILS

PCP-FAB

FILE: pcpstde2.dgn	DN: TxDOT	CK: TxDOT	DW: JTR	CK: JMH
© TxDOT October 2010	DISTRICT	FEDERAL AID PROJECT		SHEET
REVISIONS	FTW	(SEE TITLE SHEET)		1822
	COUNTY	CONTROL	SECT	JOB	HIGHWAY
	TARRANT	14	16	255	IH 35W

DISCLAIMER:
The use of this standard is governed by the "Texas Engineering Practice Act". No warranty of any kind is made by TxDOT for any purpose whatsoever. TxDOT assumes no responsibility for the conversion of this standard to other formats or for incorrect results or damages resulting from its use.

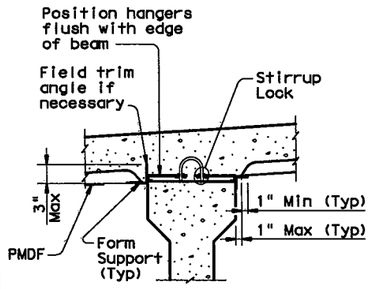

PRESTR CONC I-BEAMS AND I-GIRDERS WITH STIRRUP LOCKS

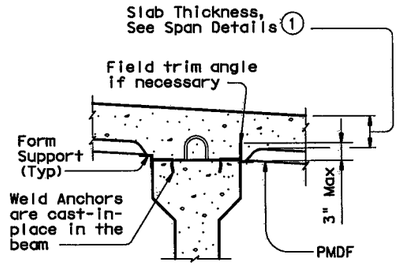

PRESTR CONC I-BEAMS AND I-GIRDERS WITH WELD ANCHORS

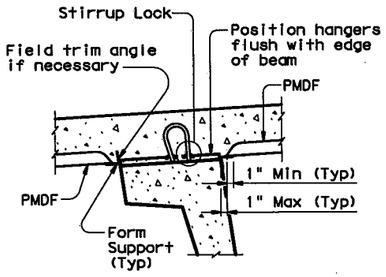

U-BEAMS WITH STIRRUP LOCKS

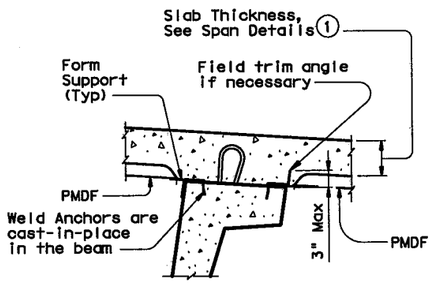

U-BEAMS WITH WELD ANCHORS

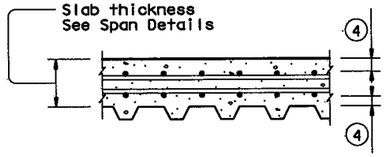

TYP LONGITUDINAL SLAB SECTION

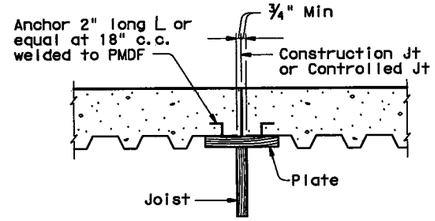

Note: In spans where PMD forms are used, timber forms must be used at construction joints. Adequate provision must be made to support edge of metal form and to provide anchorage of metal form to slab concrete where joined to wood forms.

SECTION THRU CONSTRUCTION JOINT

FOR PRESTR CONC U-BEAM BRIDGES:
Size, spacing, and orientation of bottom mat of slab reinforcement must match the top mat of reinforcing shown on the span details except all bottom mat bars are to be #5.

DESIGN NOTES:

As a minimum, PMDF and support angles must be designed for the dead load of the form, reinforcement and concrete plus 50 psf for construction loads. Flexural stresses due to these design loads must not exceed 75 percent of the yield strength of the steel. Allowable stress for weld metal must be 12,400 psi.

Maximum deflection under the weight of forms, reinforcement and concrete or 120 psf, whichever is greater, shall not exceed the following:

1/180 of the form design span, but not more than 0.50", for design spans of 10' or less.

1/240 of the form design span, but not more than 0.75", for design spans greater than 10'.

The form design span must not be less than the clear distance between beam flanges, measured parallel to the form flutes, minus 2".

CONSTRUCTION NOTES:

Form sheets must not be permitted to rest directly on the top of beam flanges. Form sheets must be securely fastened to form supports and must have a minimum bearing length of one inch at each end. Form supports must be placed in direct contact with beam flanges.

All attachments must be made by permissible welds, screws, bolts, clips or other means shown on the the forming plans. All sheet metal assembly screws must be installed with torque-limiting devices to prevent stripping. Only welds or bolts must be used to support vertical loads.

Welding and welds must be in accordance with the provisions of Item 448, "Structural Field Welding", pertaining to fillet welds. All welds must be made by a qualified welder in accordance with Item 448.

All permanently exposed form metal, where the galvanized coating has been damaged, must be thoroughly cleaned and repaired in accordance with Item 445, "Galvanizing". Minor heat discoloration in areas of welds need not be touched up.

Flutes must line up uniformly across the entire width of the structure where main reinforcing steel is located in the flute.

Construction joints will not be permitted unless shown on the plans. The location of and forming details for any construction joint used must be shown on the forming plans. Forms below a construction joint must be removed after curing of the slab.

A sequence for uniform vibration of concrete must be approved by the Engineer prior to concrete placement. Attention must be given to prevent damage to the forms, yet provide proper vibration to prevent voids or honeycomb in the flutes and at headers and/or construction joints.

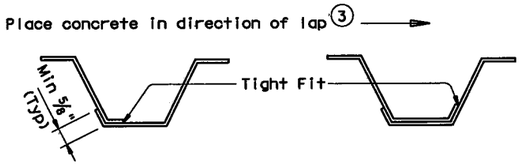

SIDE LAP DETAILS

(1) Slab thickness minus 5/8" if corrugations match reinforcing bars.

(2) Welding of form supports to tension flanges will not be permitted. Other methods of providing wind hold down resistance for PMDF in tension flange zones will be considered. At least one layer of sheet metal must be provided between the flange and the weld joint.

(3) The direction of concrete placement will be such that the upper layer of the form overlap is loaded first.

(4) See Span details for cover requirements.

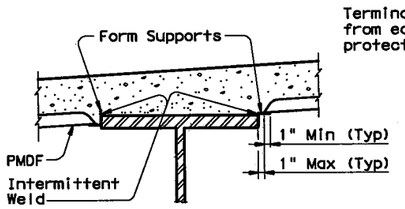

STEEL BEAMS AT COMPRESSION FLANGES

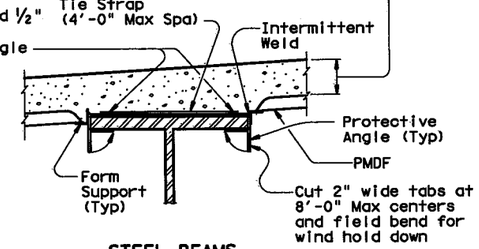

STEEL BEAMS AT TENSION FLANGES (2)

TYPICAL TRANSVERSE SECTIONS

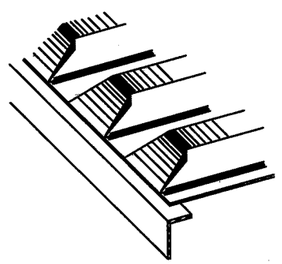

PRECLOSED

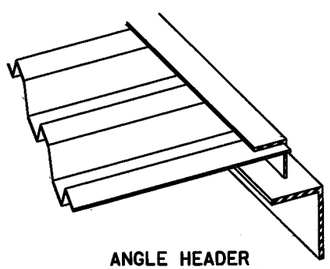

ANGLE HEADER

NOTE: This type is to be used for skewed ends only.

TYPES OF END CLOSURES

GENERAL NOTES:

Steel for Permanent Metal Deck Forms (PMDF) and support angles shall conform to ASTM A653, Structural Steel (SS), with coating designation G165. Steel must have a minimum yield strength of 33 ksi. Minimum thickness of PMDF is 20 gage and that of support angles and protective angles is 12 gage.

Submit two copies of forming plans for PMDF to the Engineer. These plans must show all essential details of proposed form sheets, closures, fasteners, supports, connectors, special conditions and size and location of welds. These plans must clearly show areas of tension flanges for steel beams and provisions for protecting the tension flanges from welding notch effects by inclusion of separating sheet metal or other positive method. These plans must be designed, signed, and sealed by a licensed professional engineer. Department approval of these plans is not required, but the Department reserves the right to require modifications to the plans. The Contractor is responsible for the adequacy of these plans.

The details and notes shown on this standard are to be used as a guide in preparation of the forming plans.

All material, labor, tools and incidentals necessary to form a bridge deck with Permanent Metal Deck Forms is considered subsidiary to Item 422, "Reinforced Concrete Slab".

Texas Department of Transportation
Bridge Division

PERMANENT METAL DECK FORMS

PMDF

FILE: pmdfstel.dgn	DN: TxDOT	CK: TxDOT	DW: TxDOT	CK: TxDOT
©TxDOT April 2006	DISTRICT	FEDERAL AID PROJECT		SHEET
REVISIONS 08-2007: Added I-Girders.	FTW	(SEE TITLE SHEET)		1823
	COUNTY	CONTROL	SECT	JOB	HIGHWAY
	TARRANT	14	16	255	IH 35W

PATH:
LEVELS DISPLAYED
1

DISCLAIMER:
The use of this standard is governed by the "Texas Engineering Practice Act". No warranty of any kind is made by TxDOT for any purpose whatsoever. TxDOT assumes no responsibility for the conversion of this standard to other formats or for incorrect results or damages resulting from its use.

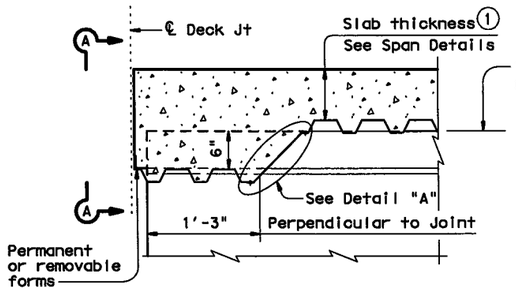

AT THICKENED SLAB END FOR U-BEAMS

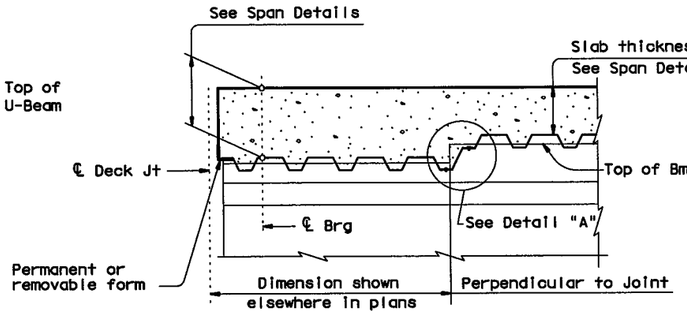

AT THICKENED SLAB END FOR PRESTRESSED I-BEAMS, I-GIRDERS AND STEEL BEAMS

Showing I-Beam block-out.
No block-out for I-Girders or Steel Beams.

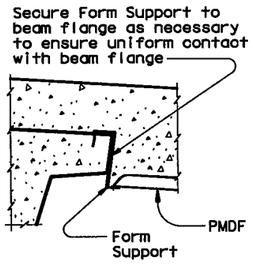

SECTION A-A

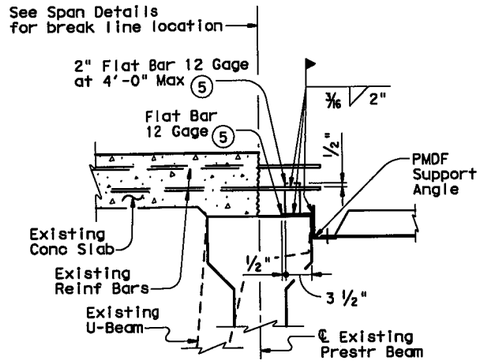

SHOWING PRESTRESSED CONCRETE I-BEAMS, I-GIRDERS AND U-BEAMS

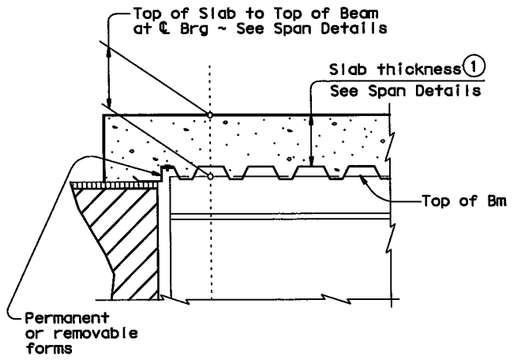

AT SLAB OVER ABUT BKWL OR INV TEE STEM FOR CONC BEAMS WITHOUT THICKENED SLAB END

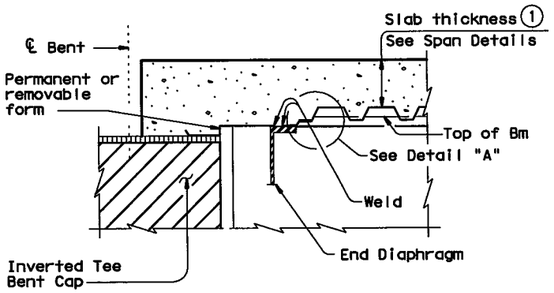

AT SLAB OVER INV TEE STEM FOR STEEL BEAMS WITHOUT THICKENED SLAB END

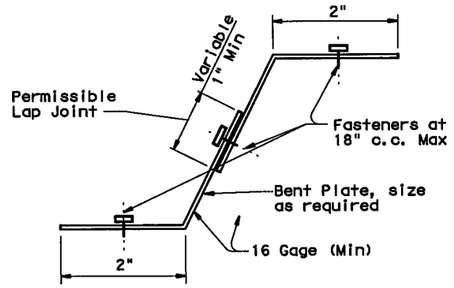

DETAIL "A"

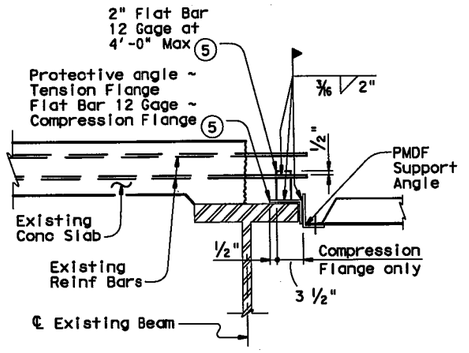

SHOWING STEEL BEAMS

WIDENING DETAILS

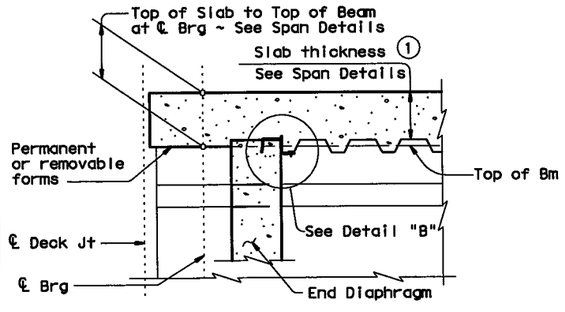

AT CONC END DIAPHRAGM FOR PRESTRESSED I-BEAMS AND STEEL BEAMS

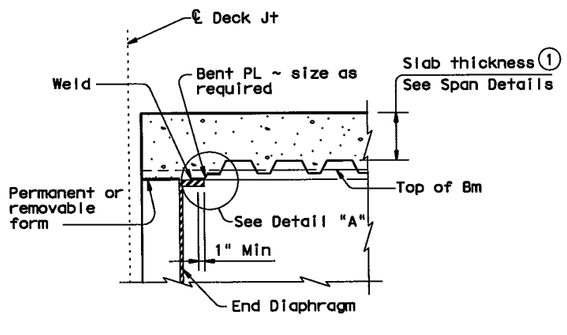

AT END DIAPHRAGM FOR STEEL BEAMS WITHOUT THICKENED SLAB END

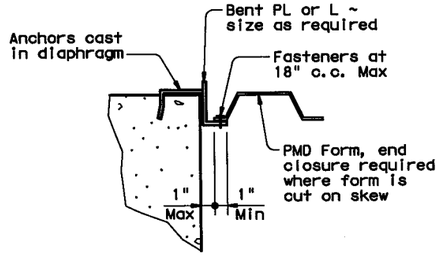

DETAIL "B"

(1) Slab thickness minus 5/8" if corrugations match reinforcing bars

(5) Minimum yield stress of 12 Gage bars shall be 40 ksi

DETAILS AT ENDS OF BEAMS

SHEET 2 OF 2

Texas Department of Transportation
Bridge Division

PERMANENT METAL DECK FORMS

PMDF

FILE: pmdfstel.dgn	DN: TxDOT	CK: TxDOT	DW: TxDOT	CK: TxDOT
©TxDOT April 2006	DISTRICT	FEDERAL AID PROJECT		SHEET
REVISIONS 08-2007: Added I-Girders.	FTW	(SEE TITLE SHEET)		1824
	COUNTY	CONTROL	SECT	JOB	HIGHWAY
	TARRANT	14	16	255	IH 35W

PATH:
LEVELS DISPLAYED
1

DISCLAIMER:
The use of this standard is governed by the "Texas Engineering Practice Act". No warranty of any kind is made by TxDOT for any purpose whatsoever. TxDOT assumes no responsibility for the conversion of this standard to other formats or for incorrect results or damages resulting from its use.

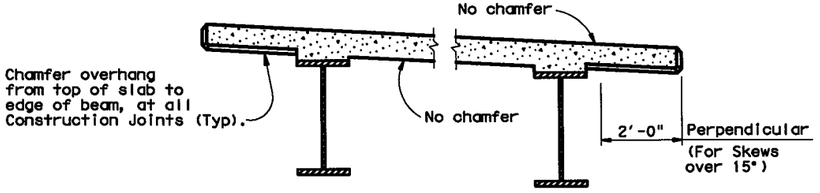

CHAMFER LIMITS DETAILS

Note: See Span Details for Const Jt locations.

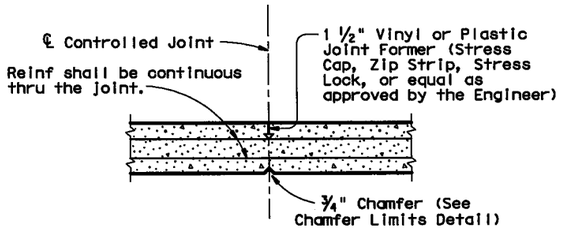

CONTROLLED JOINT DETAIL

(Saw-cutting will not be allowed)

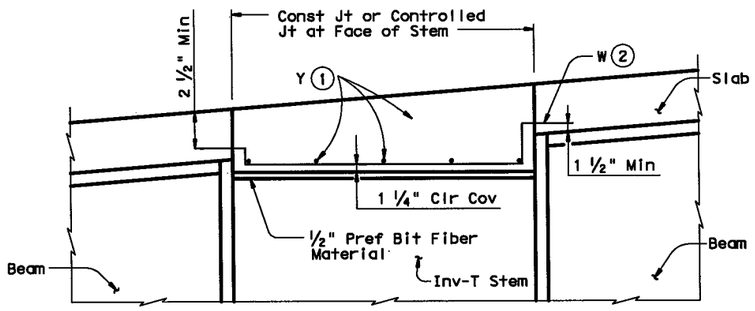

REINFORCEMENT OVER INV-T BENTS

Slab reinforcement not shown for clarity.

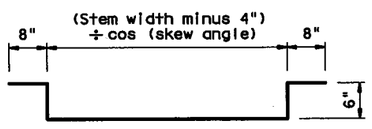

BARS W (#4)

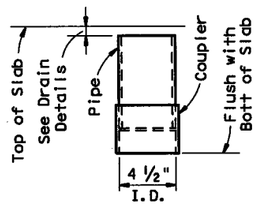

C-I-P DRAIN DETAIL

Note: Roughen outside of PVC with coarse rasp or equal to ensure bond with cast-in-place concrete.

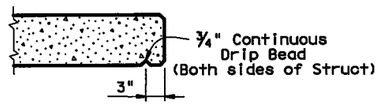

DRIP BEAD DETAIL

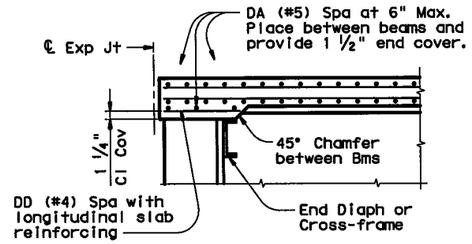

SECTION AT SLAB ENDS

Showing additional required slab reinforcement when Thickened Slab Ends, shown on standard SBTS, are not indicated on the span details.

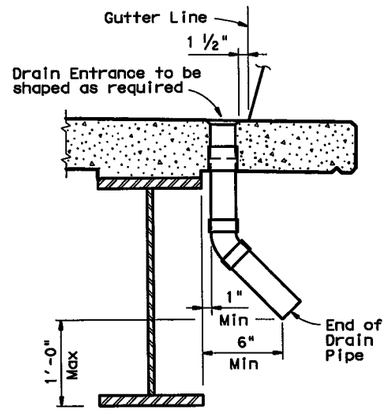

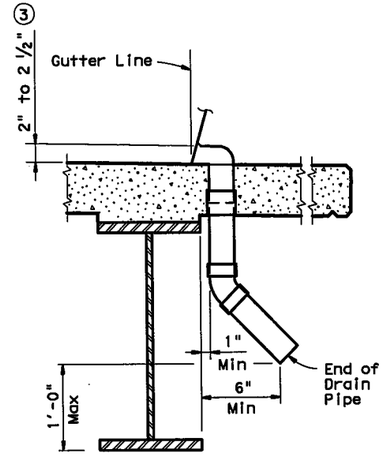

DRAIN DETAILS

Note: All drain pipe and fittings to be 4" diameter (Sch 40) PVC. See Item 481 "PVC Pipe for Drains" for pipe, connections and solvent welding. Bend reinforcing steel to clear PVC 1". Drain length and location shall be as directed by the Engineer. No drains shall be permitted over roadways or railways, or within 10'-0" of Bent Caps. Degrease outside of exposed PVC, apply acrylic water base primer, then coat with same surface finishing material as used for outside girder face. Variations of the above designs, as required for the type of rail used and it's location on the structure, shall be installed with the approval and direction of the Engineer. No water shall be discharged onto girders.

GENERAL NOTES:

Designed in accordance with AASHTO LRFD Specifications.

All items (reinforcing steel, drains, joint formers, etc.) shown on this sheet are to be considered subsidiary to other bid items.

① Space Bars Y (#4) at 12" Max. Use 2" end cover. Number of Bars Y must satisfy spacing limit. Place parallel to bent.

② Space Bars W at 12" Max (3" from end of cap). Tilt if necessary to maintain cover requirements. Place parallel to longitudinal slab reinforcement.

③ Drain Entrance formed in Rail or Sidewalk.

Texas Department of Transportation
Bridge Division

MISCELLANEOUS SLAB DETAILS
STEEL GIRDERS AND BEAMS

SBMS

FILE: sbmstdel.dgn	DN: TxDOT	CK: TxDOT	DW: TxDOT	CK: TxDOT
©TxDOT April 2006	DISTRICT	FEDERAL AID PROJECT		SHEET
REVISIONS	FTW	(SEE TITLE SHEET)		1825
	COUNTY	CONTROL	SECT	JOB	HIGHWAY
	TARRANT	14	16	255	IH 35W

LEVELS DISPLAYED
PATH:

DISCLAIMER:
The use of this standard is governed by the "Texas Engineering Practice Act". No warranty of any kind is made by TxDOT for any purpose whatsoever. TxDOT assumes no responsibility for the conversion of this standard to other formats or for incorrect results or damages resulting from its use.

ACC:

LEVELS DISPLAYED

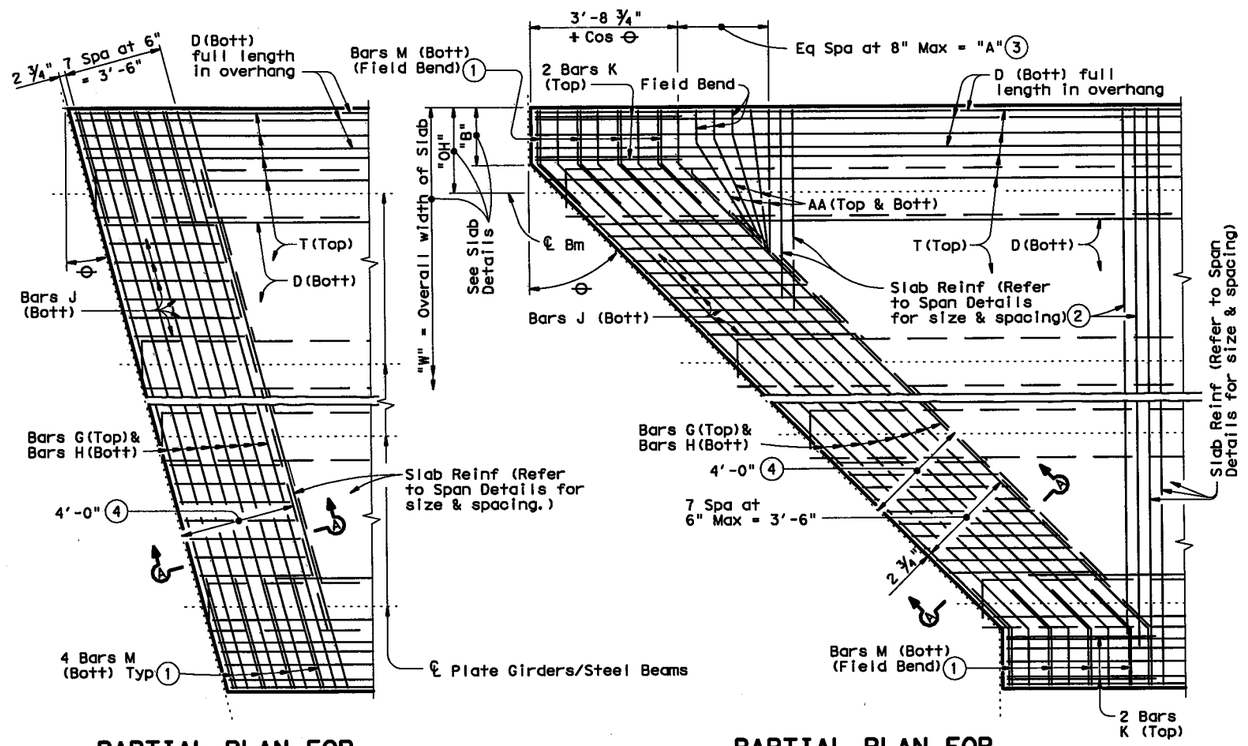

PARTIAL PLAN FOR SLABS WITHOUT BREAKBACK

PARTIAL PLAN FOR SLABS WITH BREAKBACK

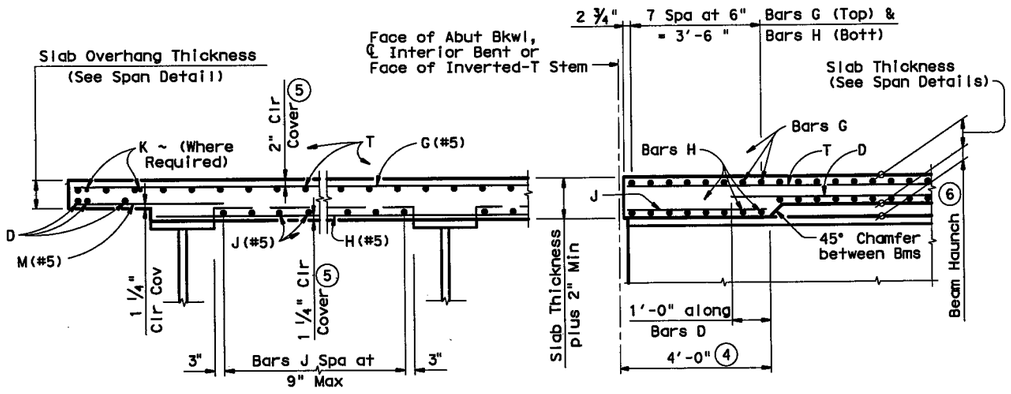

TYPICAL TRANSVERSE SECTION

SECTION A-A

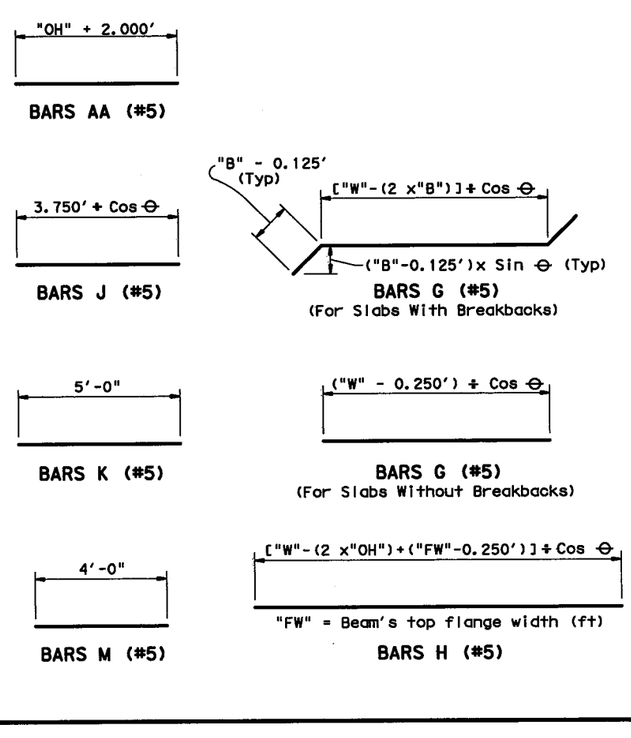

(1) 1' Max Spacing measured along slab edge.

(2) End the top transverse reinforcement steel at inside Bar G. End the bottom transverse reinforcement steel 1'-0" beyond inside Bar G.

(3) "A" = ("OH" + 2.125' + $\frac{0.052'}{\text{Sin} \ominus}$ - "B") x Tan ⊖

(4) Thickened Slab End dimensioned perpendicular to Face of Bkwl, Centerline Interior Bent or Face of Inverted-T Stem.

(5) Clear Cover shall be as indicated unless otherwise shown on Span Details.

(6) Slab haunch must be 2" or greater at Plate Girder/Steel Beam ends to use these details.

GENERAL NOTES:

Designed according to AASHTO LRFD Specifications.

These details are to be used in conjunction with the Span Details and Standard PCP (if prestressed concrete panels are used).

All reinforcing bars shall be Grade 60 steel.

Unless otherwise shown or noted hereon, all Span Details remain unchanged.

If slab reinforcing steel is shown on the Slab Details to be epoxy coated, then Bars AA, G, K, H, J and M shall be epoxy coated.

Bar laps, where required, shall be as follows:

Uncoated ~ #4 = 1'-5"
~ #5 = 1'-9"
Epoxy Coated ~ #4 = 2'-1"
~ #5 = 2'-7"

HL93 LOADING

Texas Department of Transportation
Bridge Division

THICKENED SLAB END DETAILS

STEEL GIRDER AND BEAM SPANS

SBTS

FILE: sbtsstel.dgn	DN: TxDOT	CK: TxDOT	DW: TxDOT	CK: TxDOT
©TxDOT April 2006	DISTRICT	FEDERAL AID PROJECT		SHEET
REVISIONS	FTW	(SEE TITLE SHEET)		1826
	COUNTY	CONTROL	SECT	JOB	HIGHWAY
	TARRANT	14	16	255	IH 35W

DISCLAIMER:
The use of this standard is governed by the "Texas Engineering Practice Act". No warranty of any kind is made by TxDOT for any purpose whatsoever. TxDOT assumes no responsibility for the conversion of this standard to other formats or for incorrect results or damages resulting from its use.

PATH:

LEVELS DISPLAYED

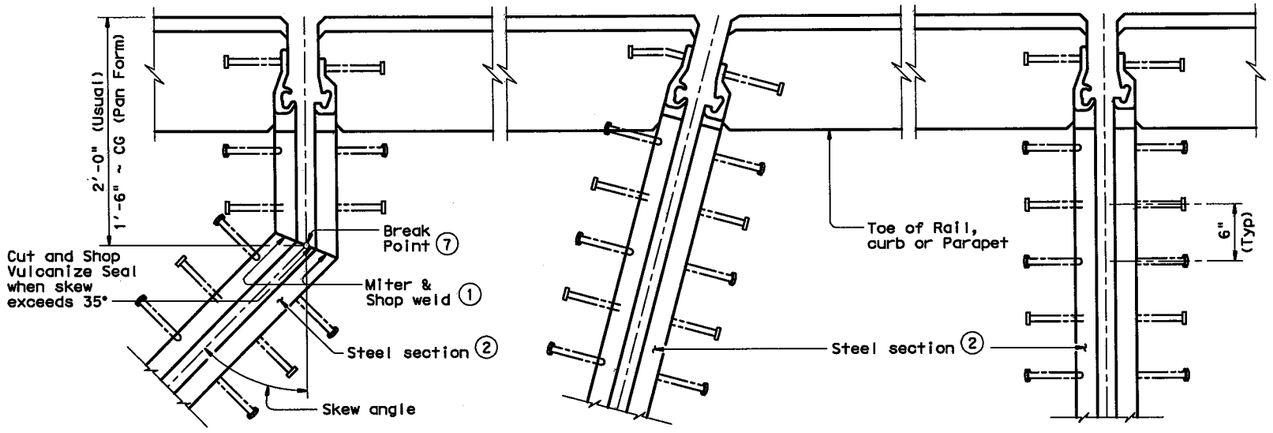

SHOWING SKEWS WITH SLAB BREAKBACKS

SHOWING SKEWS WITHOUT SLAB BREAKBACKS

SHOWING WITHOUT SKEWS AND SLAB BREAKBACKS

PLANS OF END CONDITIONS

Used for Watson Bowman Acme and D.S. Brown joint systems.
Shown with Upturns

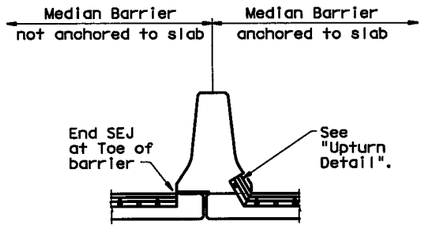

WITH OPEN DECK JOINT BELOW MEDIAN BARRIER

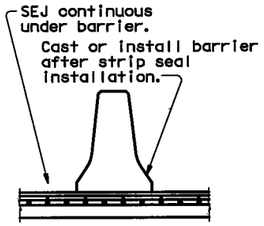

AT MEDIAN BARRIER

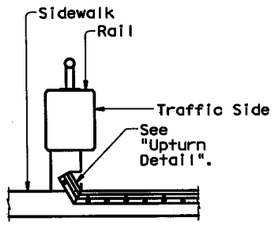

AT SIDEWALK BEHIND BRIDGE RAIL

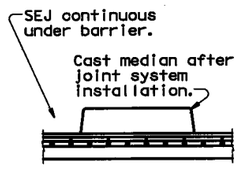

AT RAISED MEDIAN

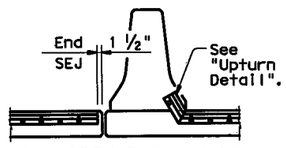

WITH OPEN DECK JOINT ADJACENT TO MEDIAN BARRIER

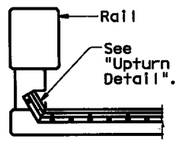

AT CONCRETE BRIDGE RAIL

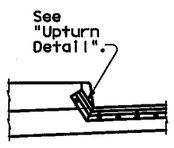

AT SIDEWALK

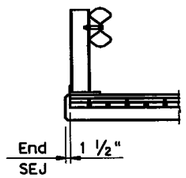

AT STEEL POST BRIDGE RAIL

TYPICAL SECTIONS (5)

Used for Watson Bowman Acme and D.S. Brown joint systems.

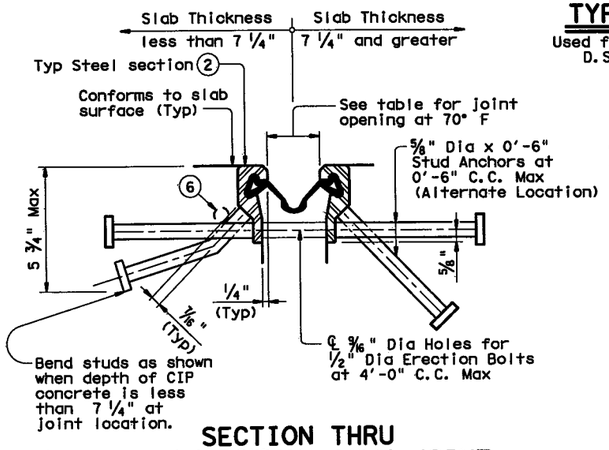

SECTION THRU WATSON BOWMAN ACME JOINT

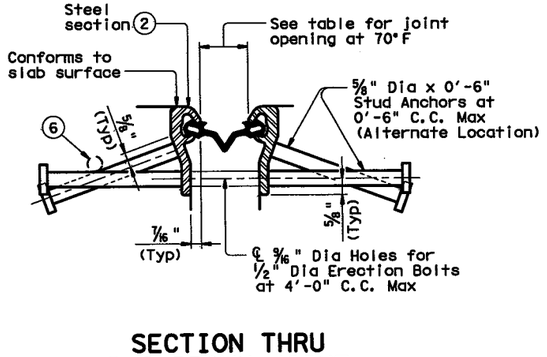

SECTION THRU D S BROWN JOINT

TABLE OF SEALED EXPANSION JOINT INFORMATION

MANUFACTURER	STEEL SECTION	STRIP SEAL			
		4" JOINT		5" JOINT	
		Seal Type	Joint Opening (3)	Seal Type	Joint Opening (3)
D.S. Brown	Type SSCM2	A2R-400	1 ¾"	A2R-XTRA	2"
Watson Bowman Acme	Type R	SE-400	1 ¾"	SE-500	2"
R.J. Watson	As Shown	SF-400	2 ½"	N/A	N/A

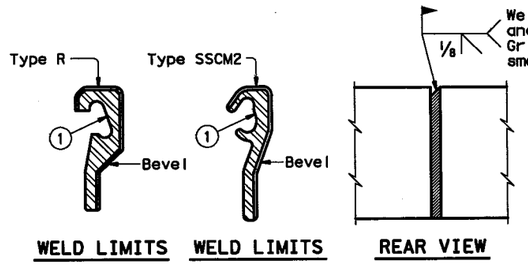

WELD LIMITS WELD LIMITS REAR VIEW

FIELD SPLICE DETAIL

Used for Watson Bowman Acme and D.S. Brown joint systems.

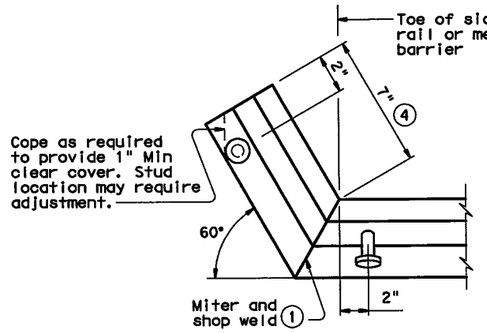

UPTURN DETAIL

Used for Watson Bowman Acme and D. S. Brown joint systems.

(1) Remove all burrs which will be in contact with seal prior to making splice.

(2) Shape of steel section shown is typical. Variations in sections must be approved by the Engineer.

(3) These openings are also the recommended minimum installation openings.

(4) Reduce for sidewalk or parapet heights less than 6".

(5) Other conditions affecting the joint profile should be noted elsewhere.

(6) Transverse bars in conflict with SEJ studs in either the bridge slab or approach slab shall be moved to rest at the junction of the studs.

(7) See Span details for location of break point.

FABRICATION NOTES:

Corresponding sections of Sealed Exp Jts shall be temporarily shop assembled, checked for fit, and match marked for shipment.

Erection holes shall be punched so as to line up when Sealed Exp Jts are in their final position.

Weld studs in accordance with AWS D1.1.

The seal shall be continuous and included in the price bid for Sealed Exp Jt.

Steel sections shall be shipped in convenient lengths of 24'-0" Max and 10'-0" Min unless otherwise necessary for stage construction or widenings. One shop splice will be permitted in each shipping length provided no piece is less than 2'-0" in length and sufficient studs are added to limit the stud to shop or field splice distance to 2" Min and 4" Max.

Shop and field splices shall be made by butt welding with areas in contact with seal to be ground smooth.

Paint portions of steel sections not in contact with concrete with the primer specified for System II paint.

Shop drawings for the fabrication of Sealed Expansion Joints will not require the Engineer's approval if fabrication is in accordance with the details shown on this standard.

An SEJ Layout which identifies location of each steel section shall be developed. Permanently mark each steel section in accordance with the SEJ Layout.

CONSTRUCTION NOTES:

The Contractor shall arrange for securing the Sealed Exp Jt in position, and placing to the proper grade and alignment by welding braces to adjacent reinf steel, to prestressed beam stirrups, or to anchors cast in concrete diaphragms. Cost of temporary bracing is to be included in the price bid for Sealed Exp Jt.

Remove erection bolts and spacers when needed to prevent damage to the joint and slab concrete.

Seal cavity shall be cleaned and prepared for seal installation as per the manufacturer's installation procedures.

GENERAL NOTES:

Sealed Exp Jts shall be provided in the size and at locations shown on plans.

Minimum slab and overhang thickness required for the use of SEJ-A is 6 ½".

Texas Department of Transportation
Bridge Division

SEALED EXPANSION JOINT TYPE A WITHOUT OVERLAY

SEJ-A

FILE: sejastel.dgn	DN: TxDOT	CK: TxDOT	DW: JTR	CK: JMH	
© TxDOT April 2006	DISTRICT	FEDERAL AID PROJECT			SHEET
REVISIONS	FTW	(SEE TITLE SHEET)			1827
12/10: Added R J Watson Joint.	COUNTY		CONTROL	SECT	JOB	HIGHWAY
	TARRANT		14	16	255	IH 35W

DISCLAIMER:
The use of this standard is governed by the "Texas Engineering Practice Act". No warranty of any kind is made by TxDOT for any purpose whatsoever. TxDOT assumes no responsibility for the conversion of this standard to other formats or for incorrect results or damages resulting from its use.

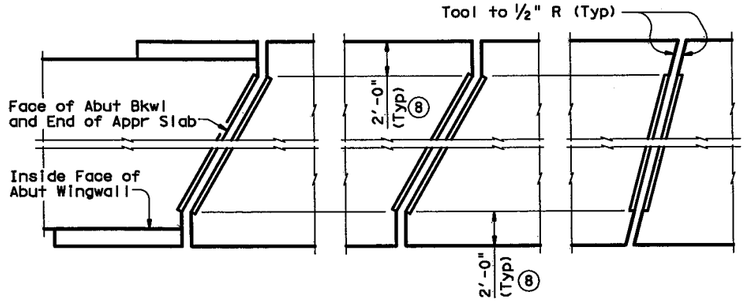

JOINTS AT ABUTMENTS | SKEWS OVER 15° | SKEWS THRU 15°

PLANS OF ARMOR PLATES

Used for R. J. Watson joint systems.

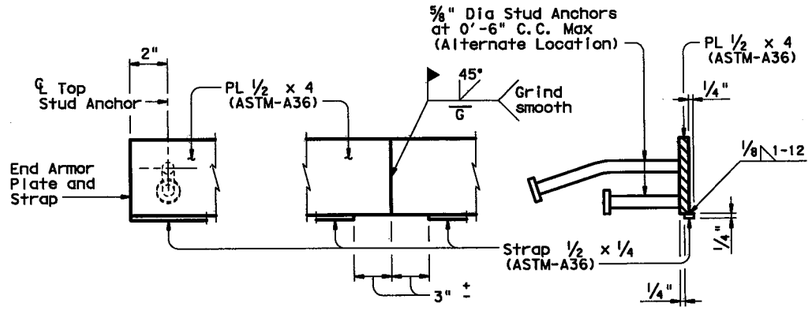

END VIEW | FIELD SPLICE (Studs not shown for clarity) | SECTION

ELEVATION OF ARMOR PLATE

Used for R. J. Watson joint systems.

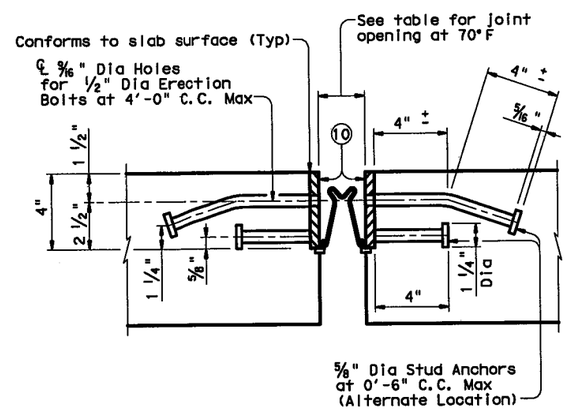

SECTION THRU R J WATSON JOINT

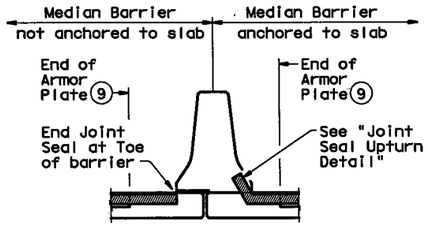

WITH OPEN DECK JOINT BELOW MEDIAN BARRIER

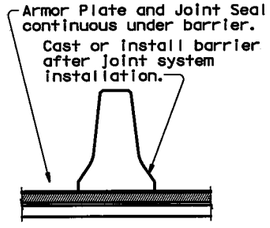

AT MEDIAN BARRIER

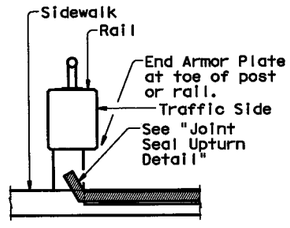

AT SIDEWALK BEHIND BRIDGE RAIL

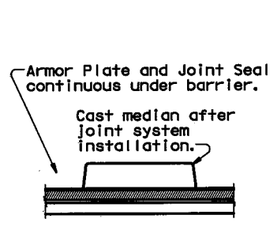

AT RAISED MEDIAN

⑤ Other conditions affecting the joint profile should be noted elsewhere.

⑧ Unless shown otherwise, terminate armor plate at slab break point if break is more than 2' from slab edge.

⑨ See "Plans of Armor Plates".

⑩ Coat with manufacturer's supplied epoxy primer above strap before installing sealant.

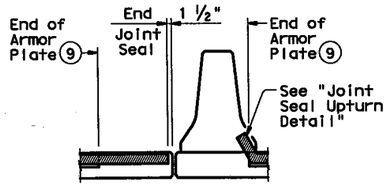

WITH OPEN DECK JOINT ADJACENT TO MEDIAN BARRIER

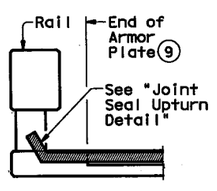

AT CONCRETE BRIDGE RAIL

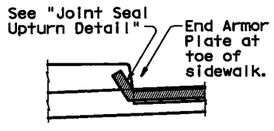

AT SIDEWALK

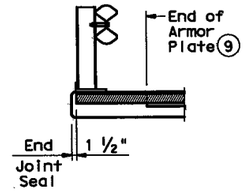

AT STEEL POST BRIDGE RAIL

TYPICAL SECTIONS ⑤

Used for R. J. Watson joint systems.

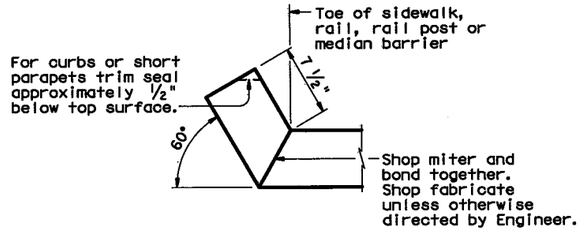

JOINT SEAL UPTURN DETAIL

Used for R. J. Watson joint systems.

CONSTRUCTION NOTE FOR R. J. WATSON JOINT:
Splice and install seal in accordance with the manufacturer's directions and with the adhesive provided by the manufacturer.

LEVELS DISPLAYED | PATH:

SHEET 2 OF 2

Texas Department of Transportation
Bridge Division

SEALED EXPANSION JOINT TYPE A WITHOUT OVERLAY

SEJ-A

FILE: sejastel.dgn	DN: TxDOT	CK: TxDOT	DW: JTR	CK: JMH		
©TxDOT April 2006	DISTRICT	FEDERAL AID PROJECT				SHEET
REVISIONS	FTW	(SEE TITLE SHEET)				1828
12/10: Added R J Watson Joint.	COUNTY		CONTROL	SECT	JOB	HIGHWAY
	TARRANT		14	16	255	IH 35W

DISCLAIMER:
The use of this standard is governed by the "Texas Engineering Practice Act". No warranty of any kind is made by TxDOT for any purpose whatsoever. TxDOT assumes no responsibility for the conversion of this standard to other formats or for incorrect results or damages resulting from its use.

PATH:

LEVELS DISPLAYED

1

(1) Applicable to EE bearings only.

(2) Min DL can be reduced by the ratio of (actual exp length/max exp length).

(3) Locate "Bearing Type" identification here.

(4) Locate permanent mark here.

(5) Min Bearing Seat width, normal to girder, is "S" + 8".

(6) See span details for beam grade (slope) at bearing locations.

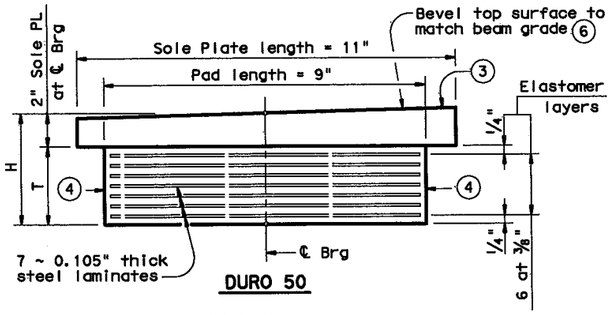

DURO 50

TABLE OF END BEARING DESIGNS

Bearing Type	Neoprene Pad		Sole Plate		H	S	T	Flange Width		Reactions			Max Expansion Length (1)
	Width	Length	Width	Length				Min	Max	(1)(2) Min DL	Max DL	Max Total	
	in	in	in	in	in	in	in	in	in	kip	kip	kip	ft
EE1 or EF1	15	9	25.5	11	5.5	20.0	3.49	10	15	59	115	144	250
EE2 or EF2	18	9	28.5	11	5.5	23.0	3.49	10	18	71	148	185	250
EE3 or EF3	21	9	31.5	11	5.5	26.0	3.49	11	21	83	181	226	250
EE4 or EF4	24	9	34.5	11	5.5	29.0	3.49	14	24	95	215	269	250
EE5 or EF5	27	9	37.5	11	5.5	32.0	3.49	17	27	106	249	312	250
EE6 or EF6	30	9	40.5	11	5.5	35.0	3.49	20	30	118	284	355	250
EE7 or EF7	32	9	42.5	11	5.5	37.0	3.49	22	32	126	307	384	250
EE8 or EF8	34	9	44.5	11	5.5	39.0	3.49	24	34	134	331	414	250
EE9 or EF9	36	9	46.5	11	5.5	41.0	3.49	26	36	142	355	443	250

TYPE EE & EF ELASTOMERIC BEARING DETAIL

Vulcanize Sole Plate to elastomer.

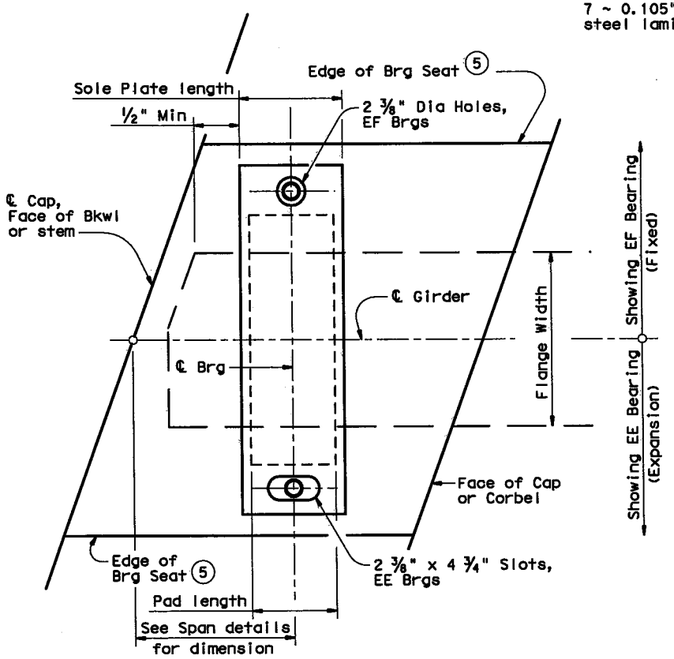

PLAN

Pipe sleeves, washers and nuts not shown for clarity

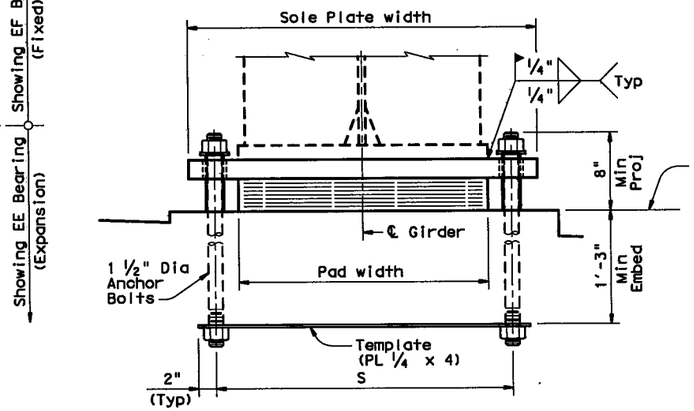

FRONT ELEVATION

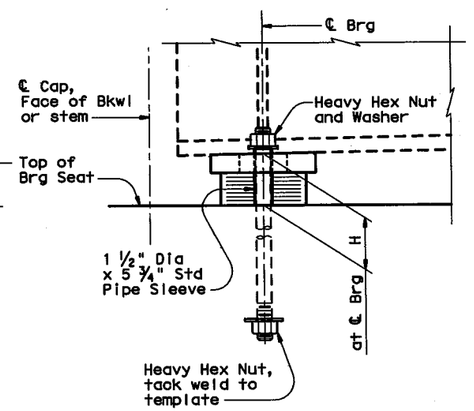

SIDE ELEVATION

END FIXED (EF) AND EXPANSION (EE) BEARINGS

Paid for at unit price bid for "Elastomeric Bearing" as per Item 434.

GENERAL NOTES:

The bearings shown on this standard are intended for use with continuous and simple span rolled beams and plate girders. None of the bearings shown are designed to resist uplift.

See span details for bearing type and location.

The bearing fabricator is required to develop a bearing layout which identifies location and orientation of all bearings. Permanently mark each bearing in accordance with the bearing layout. A copy of the bearing layout is to be provided to the Engineer.

Anchor bolts must conform to ASTM F 1554 Grade 105 or ASTM A 193 Grade B7. Nuts must conform to ASTM A 563 Grade DH, heavy hex. Washers must conform to ASTM F 436. Pipe sleeves must conform to the requirements of ASTM A 53 Grade B or A 501. Hot-dip galvanize all anchor bolts (exposed end plus 6" Min), nuts not embedded in concrete, and pipe sleeves as per Item 445, "Galvanizing".

For painted bridges, steel for sole plates must conform to ASTM A 36 or A 588. For unpainted (weathering) bridges, steel for sole plates must conform to ASTM A 588.

Shop drawings for approval are required. Dimension sole plates to the nearest 1/16" based on required thickness at centerline of bearing and slope of the girder in the finished structure. Thickness tolerance variation from the shop drawings is 1/16" +/-, except the variation from a plane parallel to the theoretical top surface can not exceed 1/16" total.

Install anchor bolt nuts finger-tight or loosely snug.

(7) Form hole with either plastic duct meeting the requirements of Item 426.2.D.1.a(1) or galvanized corrugated metal post-tensioning duct. Do not use PVC or other smooth plastic or steel duct. Do not drill hole.

(8) Fill void with packaged non-metallic non-shrink cementitious grout that is certified by the manufacturer to meet the requirements of ASTM C 1107, free of chlorides, and capable of 4,000 psi compressive strength. Void may also be filled with epoxy grout using Type VIII epoxy. Clean holes before filling.

All bearings on this standard require wood float bearing seat surfaces that are clean and free of all loose material before placement of bearings.

These bearings are not intended for use with bridges over 100 ft wide. The anchor bolts are not designed to restrain temperature-induced lateral movement.

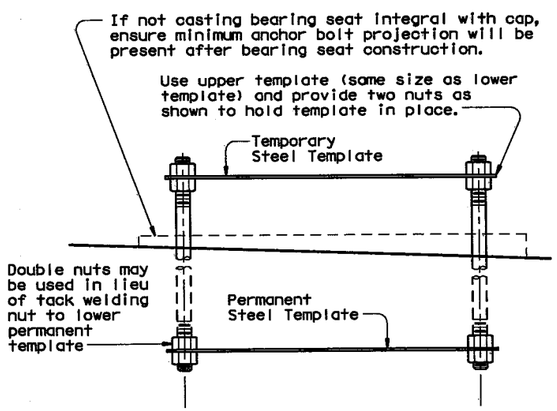

ANCHOR BOLT SETTING DETAIL

Applies to all bearings on this standard. Verify and correct, if necessary, anchor bolt location immediately after concrete placement, before initial set.

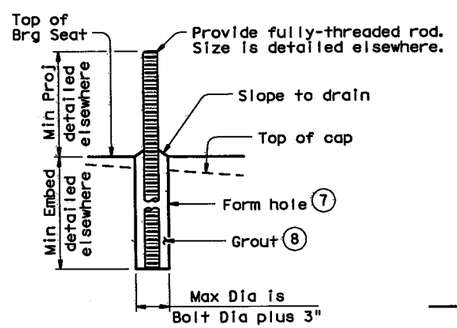

OPTIONAL ANCHOR BOLT SETTING DETAIL

Applies to all bearings on this standard.

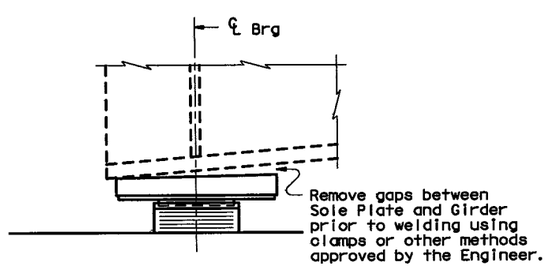

GIRDER TO SOLE PLATE WELD DETAIL

Applies to all end bearings on this standard. Small gaps between girders and sole plates are anticipated under steel dead load only.

SHEET 1 OF 3

Texas Department of Transportation
Bridge Division

ELASTOMERIC BEARING DETAILS
STEEL GIRDERS AND BEAMS

SGEB

FILE: sgebstel.dgn	DN: TxDOT	CK: TxDOT	DW: TxDOT	CK: TxDOT
©TxDOT April 2006	DISTRICT	FEDERAL AID PROJECT		SHEET
REVISIONS	FTW	(SEE TITLE SHEET)		1829
	COUNTY	CONTROL	SECT	JOB	HIGHWAY
	TARRANT	14	16	255	IH 35W

DISCLAIMER:
The use of this standard is governed by the "Texas Engineering Practice Act". No warranty of any kind is made by TxDOT for any purpose whatsoever. TxDOT assumes no responsibility for the conversion of this standard to other formats or for incorrect results or damages resulting from its use.

(2) Min DL can be reduced by the ratio of (actual exp length/max exp length).

(3) Locate "Bearing Type" identification here.

(4) Locate permanent mark here.

(5) Min Bearing Seat width, normal to girder, is "S" + 8".

(6) See span details for beam grade (slope) at bearing locations.

(9) Applicable to E bearings only.

TABLE OF INTERIOR BEARING DESIGNS

Bearing Type	Neoprene Pad		Sole Plate		H	S	T	Flange Width		Reactions			Max Expansion Length(9)
	Width	Length	Width	Length				Min	Max	(9)(2) Min DL	Max DL	Max Total	
	in	in	in	in	in	in	in	in	in	kip	kip	kip	ft
E1 or F1	15	10	27.0	12	5.1	20.5	3.09	10	15	66	180	225	206
E2 or F2	18	10	30.0	12	5.1	23.5	3.09	10	18	79	216	270	206
E3 or F3	21	10	33.0	12	5.1	26.5	3.09	11	21	92	252	315	206
E4 or F4	24	14	38.5	16	6.4	30.5	4.45	12	24	147	403	504	321
E5 or F5	27	14	41.5	16	6.4	33.5	4.45	15	27	165	454	567	321
E6 or F6	30	14	44.5	16	6.4	36.5	4.45	18	30	184	504	630	321
E7 or F7	32	16	48.0	18	6.9	39.0	4.93	19	32	224	614	768	355
E8 or F8	34	16	50.0	18	6.9	41.0	4.93	21	34	238	653	816	355
E9 or F9	36	16	52.0	18	6.9	43.0	4.93	23	36	252	691	864	355

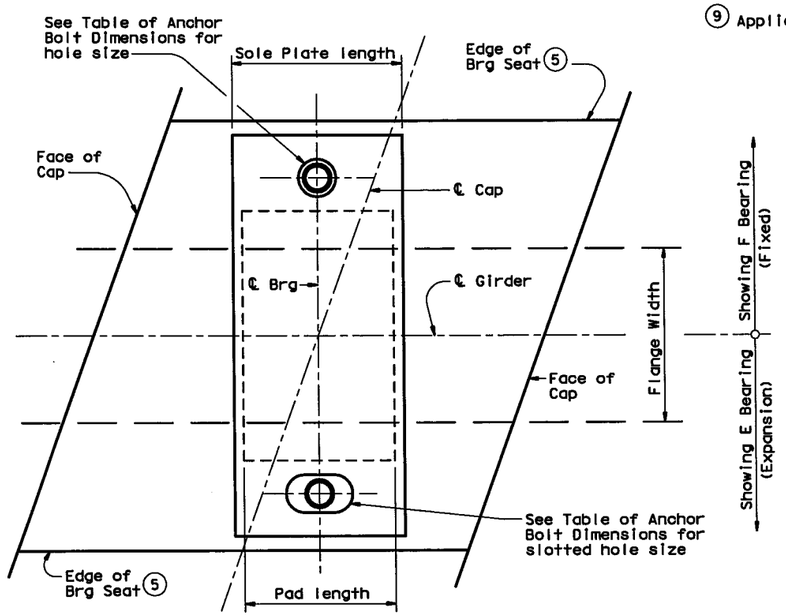

PLAN

Pipe sleeves, washers and nuts not shown for clarity

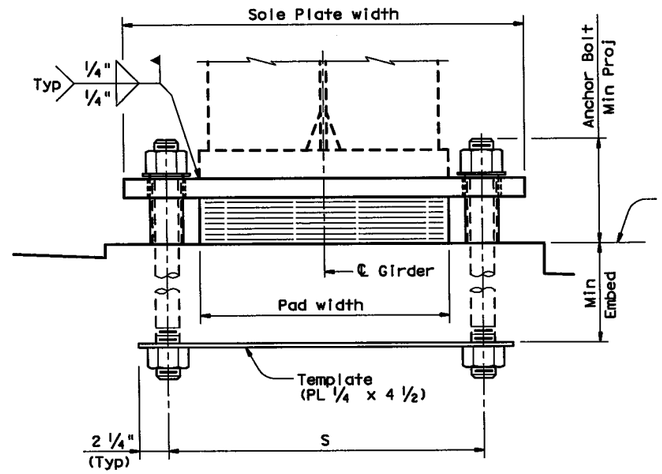

FRONT ELEVATION

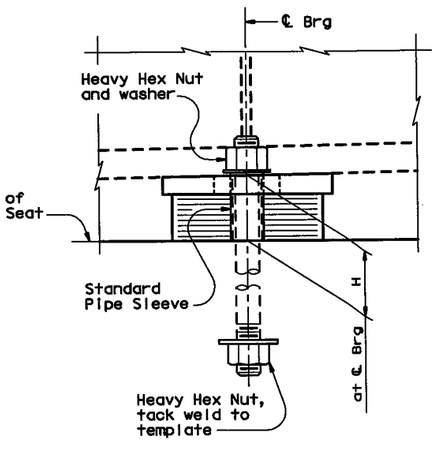

SIDE ELEVATION

INTERIOR FIXED (F) AND EXPANSION (E) BEARINGS

Paid for at unit price bid for "Elastomeric Bearing" as per Item 434.

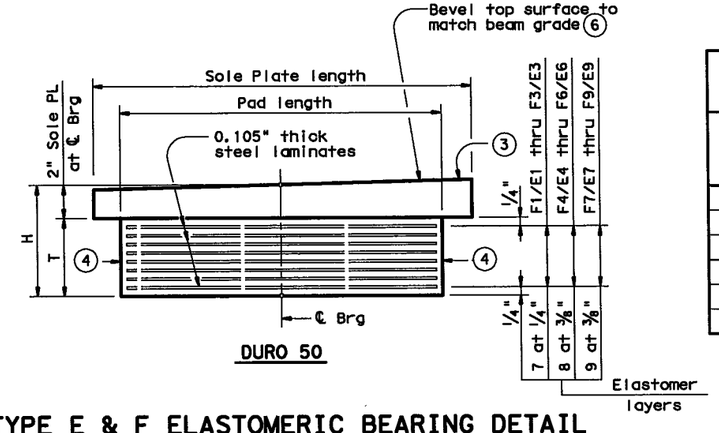

DURO 50

TYPE E & F ELASTOMERIC BEARING DETAIL

Vulcanize Sole Plate to elastomer

TABLE OF ANCHOR BOLT DIMENSIONS FOR TYPE E AND F BEARINGS

Bearing Type	Anchor Bolt Dia	Pipe Sleeve Size (Dia x Length)	Sole Plate Hole Size	Anchor Bolt	
				Embed	Proj
F1 thru F3	1 3/4"	2" x 5 3/8"	2 3/4" Dia	1'- 6"	8"
F4 thru F6	2 1/4"	2 1/2" x 6 5/8"	3 1/4" Dia	2'- 0"	9 1/2"
F7 thru F9	2 1/2"	3" x 7 1/4"	3 7/8" Dia	2'- 1"	10 1/2"
E1 thru E3	1 3/4"	2" x 5 3/8"	2 3/4" x 4 1/2"	1'- 6"	8"
E4 thru E6	2 1/4"	2 1/2" x 6 5/8"	3 1/4" x 6 1/4"	2'- 0"	9 1/2"
E7 thru E9	2 1/2"	3" x 7 1/4"	3 7/8" x 7"	2'- 1"	10 1/2"

Texas Department of Transportation
Bridge Division

ELASTOMERIC BEARING DETAILS
STEEL GIRDERS AND BEAMS

SGEB

FILE: sgebstel.dgn	DN: TxDOT	CK: TxDOT	DW: TxDOT	CK: TxDOT
© TxDOT April 2006	DISTRICT	FEDERAL AID PROJECT		SHEET
REVISIONS	FTW	(SEE TITLE SHEET)		1830
	COUNTY	CONTROL	SECT	JOB	HIGHWAY
	TARRANT	14	16	255	IH 35W

PATH:
LEVELS DISPLAYED

DISCLAIMER:
The use of this standard is governed by the "Texas Engineering Practice Act". No warranty of any purpose whatsoever. TxDOT assumes no responsibility for the conversion of this standard to other formats or for incorrect results or damages resulting from its use.

PATH:

LEVELS DISPLAYED

1

(3) Locate "Bearing Type" identification here.

(4) Locate permanent mark here.

(5) Min Bearing Seat width, normal to girder, is "S" + 8".

(6) See span details for beam grade (slope) at bearing locations.

(10) Bond PTFE to ½" plate with an approved adhesive.

(11) Steel for ½" plate must conform to ASTM A 36. Vulcanize plate to elastomer. Paint plate (in the shop) with System II in accordance with Item 446. No paint is permitted in recess or on PTFE.

TABLE OF END SLIDING BEARING DESIGNS

Bearing Type	Neoprene Pad		Sole Plate		H	S	T	Flange Width		Reactions		Max Expansion Length
	Width	Length	Width	Length				Min	Max	Max DL	Max Total	
	in	in	in	in	in	in	in	in	in	kip	kip	ft
ES1	15	9	25.5	17	5.5	20.0	2.65	10	15	108	203	500
ES2	18	9	28.5	17	5.5	23.0	2.65	10	18	130	243	500
ES3	21	9	31.5	17	5.5	26.0	2.65	11	21	151	284	500
ES4	24	9	34.5	17	5.5	29.0	2.65	14	24	173	324	500
ES5	27	9	37.5	17	5.5	32.0	2.65	17	27	194	365	500
ES6	30	9	40.5	17	5.5	35.0	2.65	20	30	216	405	500
ES7	32	9	42.5	17	5.5	37.0	2.65	22	32	230	432	500
ES8	34	9	44.5	17	5.5	39.0	2.65	24	34	245	459	500
ES9	36	9	46.5	17	5.5	41.0	2.65	26	36	259	486	500

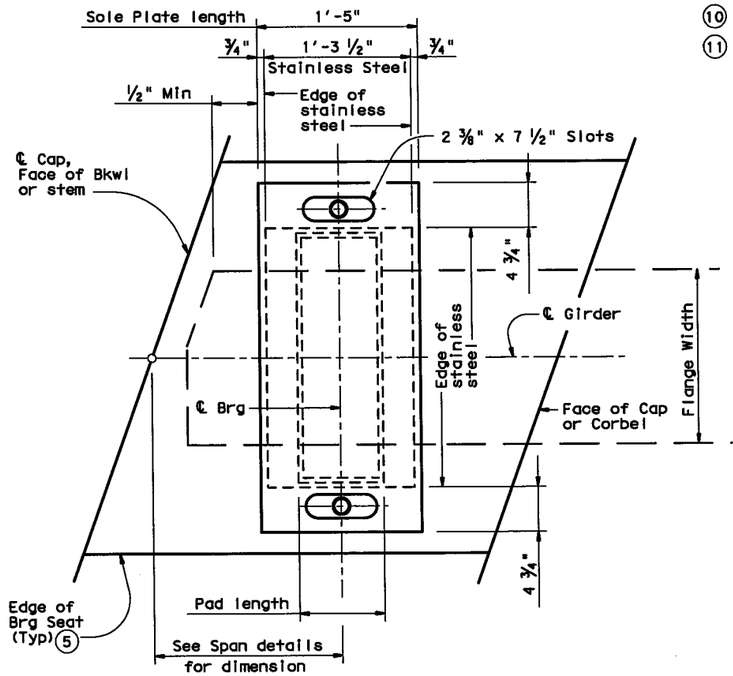

PLAN

Pipe sleeves, washers and nuts not shown for clarity

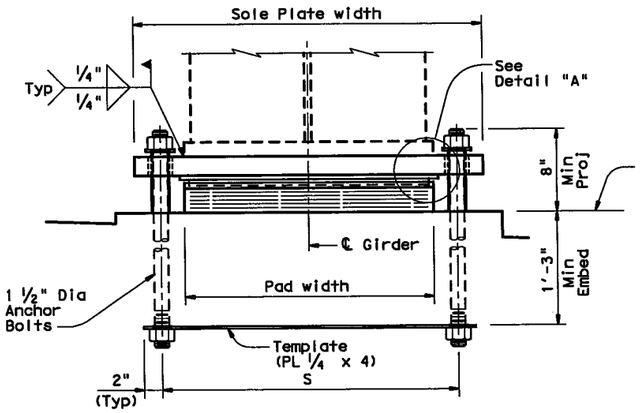

FRONT ELEVATION

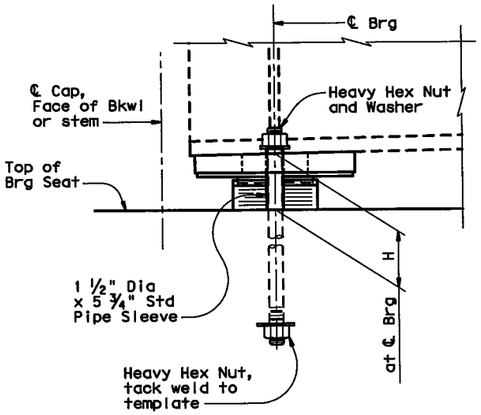

SIDE ELEVATION

END SLIDING (ES) EXPANSION BEARINGS

Paid for at unit price bid for "Sliding Elastomeric Bearing" as per Item 434.

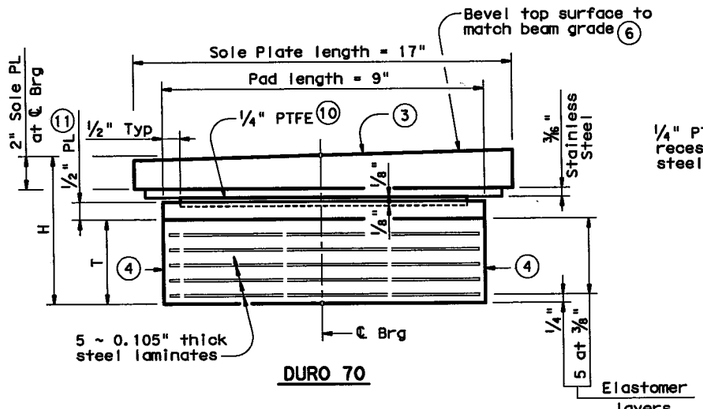

DURO 70

TYPE ES ELASTOMERIC BEARING DETAIL

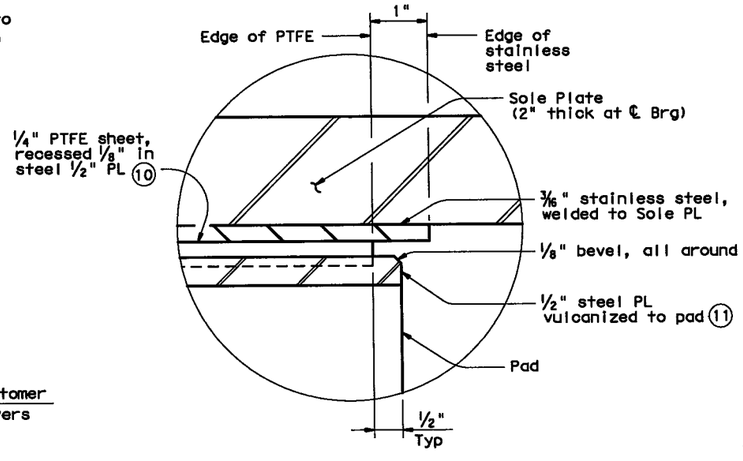

DETAIL "A"

SHEET 3 OF 3

Texas Department of Transportation
Bridge Division

ELASTOMERIC BEARING DETAILS
STEEL GIRDERS AND BEAMS

SGEB

FILE: sgebstel.dgn	DN: TxDOT	CK: TxDOT	DW: TxDOT	CK: TxDOT
©TxDOT April 2006	DISTRICT	FEDERAL AID PROJECT		SHEET
REVISIONS	FTW	(SEE TITLE SHEET)		1831
	COUNTY	CONTROL	SECT	JOB	HIGHWAY
	TARRANT	14	16	255	IH 35W

DISCLAIMER:
The use of this standard is governed by the "Texas Engineering Practice Act". No warranty of any kind is made by TxDOT for any purpose whatsoever. TxDOT assumes no responsibility for the conversion of this standard to other formats or for incorrect results or damages resulting from its use.

PATH:

LEVELS DISPLAYED

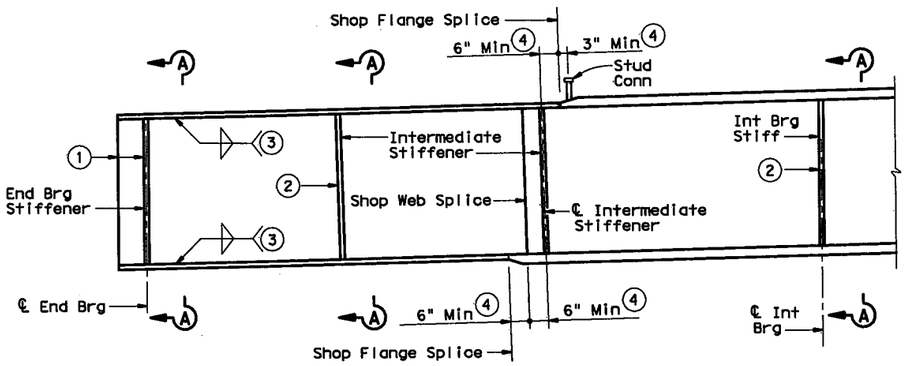

TYPICAL GIRDER ELEVATION

See Item 448 "Structural Field Welding" for welded field splice details.

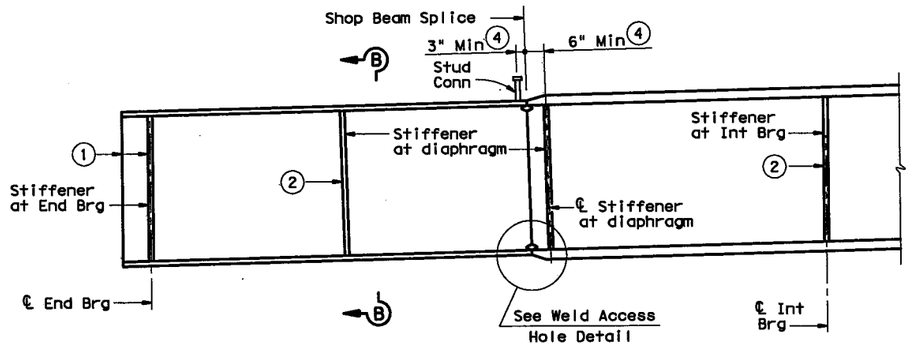

TYPICAL BEAM ELEVATION

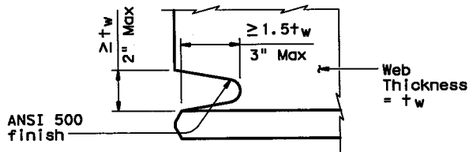

WELD ACCESS HOLE DETAIL (9)

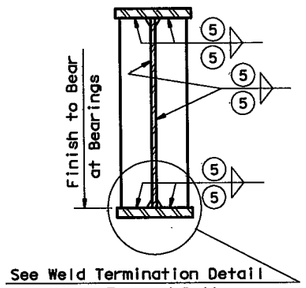

SECTION A-A

(Bearing Stiffeners)

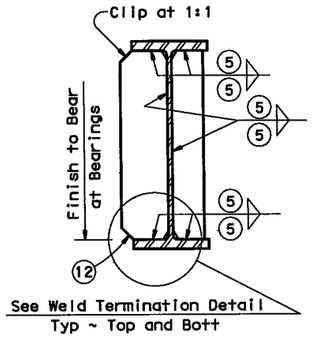

SECTION B-B

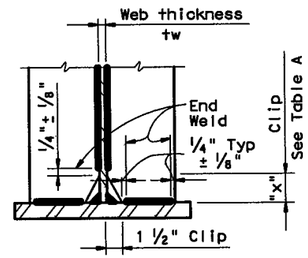

WELD TERMINATION DETAIL

TABLE A	
Web Thickness tw	"X" (6)
5/16" to 3/8"	1 1/2"
Over 3/8" to 5/8"	2 1/2"
Over 5/8" to 1"	4"

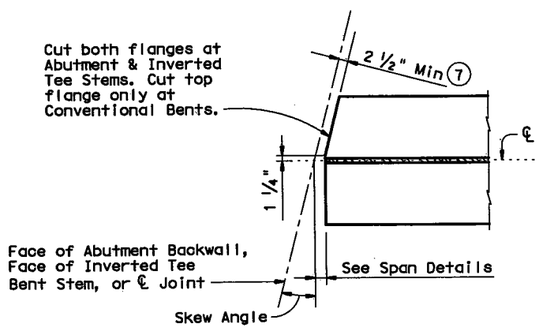

SKEWED GIRDER END DETAIL (11)

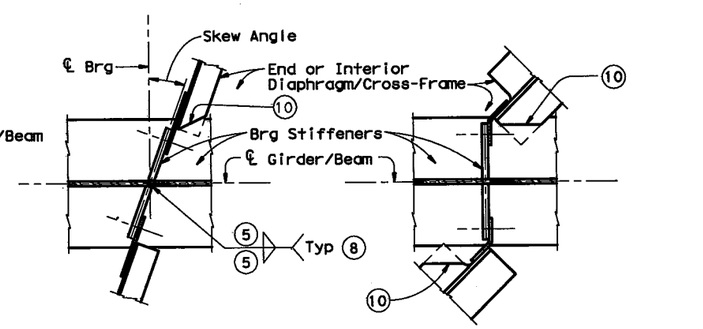

SKEW ANGLE = 0° THRU 20°

SKEW ANGLE = OVER 20° THRU 45°

BEARING STIFFENER DETAILS

(Showing Diaphragm/Cross-Frame connections)

(1) Detail girder ends and End Brg Stiffeners to be plumb after all dead load deflection has occurred.

(2) Intermediate stiffeners and Interior Bearing Stiffeners may be built perpendicular to girder flanges or plumb at the fabricator's option.

(3) See span details for weld size.

(4) Shop flange and web splices and stud connectors may be moved (6" Max), if required, to obtain clearances shown.

(5) Unless shown otherwise on the span details, use minimum size specified in AWS D1.5.

(6) The fabricator may use an "X" value different from what is shown provided that the following is satisfied:
$4t_w \leq$ "X" $\leq 6t_w$.

(7) Unless shown otherwise on span details.

(8) Increase weld size by amount of gap if gap exceeds 1/16". Maximum gap permitted is 5/16".

(9) For rolled beam shop splices only.

(10) Clip flanges of W- and C-shape diaphragm/cross-frame members at 45°. Required only for skewed connections and at flanges making an acute angle with main girder web.

(11) This detail does not handle conflicting beams.

(12) Clip at 1:1 or as required to clear bearing anchor bolt, allowing anchor bolt nut installation.

HL93 LOADING

Texas Department of Transportation
Bridge Division

MISCELLANEOUS DETAILS
STEEL GIRDERS AND BEAMS

SGMD

FILE: spgdstel.dgn	DN: TxDOT	CK: TxDOT	DW: TxDOT	CK: TxDOT
©TxDOT April 2006	DISTRICT	FEDERAL AID PROJECT		SHEET
REVISIONS	FTW	(SEE TITLE SHEET)		1832
	COUNTY	CONTROL	SECT	JOB	HIGHWAY
	TARRANT	14	16	255	IH 35W

DISCLAIMER:
The use of this standard is governed by the "Texas Engineering Practice Act". No warranty of any kind is made by TxDOT for any purpose whatsoever. TxDOT assumes no responsibility for the conversion of this standard to other formats or for incorrect results or damages resulting from its use.

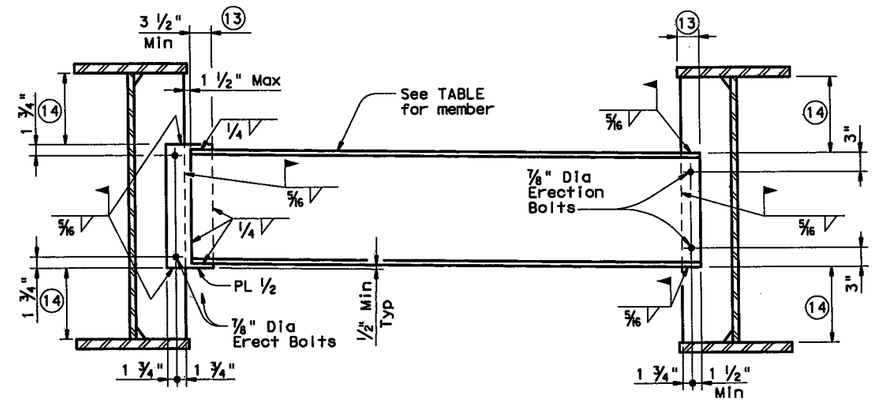

AT END BEARINGS WITH SKEW OVER 20°

AT INTERIOR LOCATIONS AND END BEARINGS WITH SKEW UP TO 20°

TYPE D1 THRU D5 DIAPHRAGMS

For straight Rolled Beams and for straight Plate Girders with web depths less than 52". For all locations, including end bearings when Thickened Slab Ends, shown on standard SBTS, are used. Minimum stiffener width is 7" for use with these diaphragms.

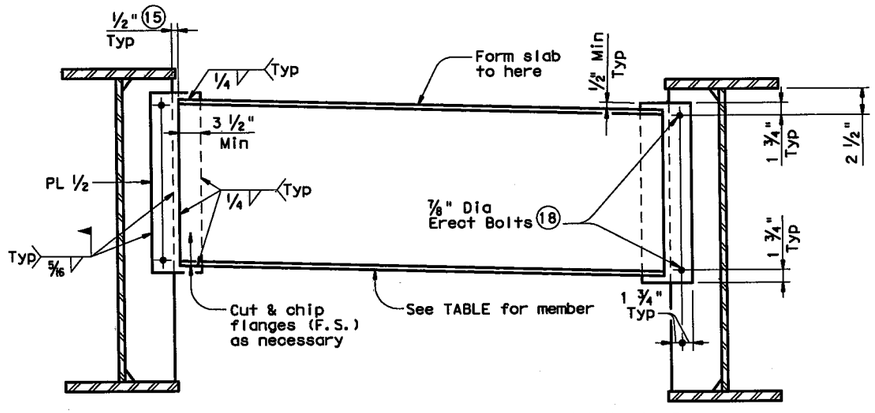

TYPE ED1 THRU ED4 END DIAPHRAGMS

For straight Rolled Beams and for straight Plate Girders with web depths less than 52". Not for use with Thickened Slab Ends, shown on standard SBTS. Minimum stiffener width is 7" for use with these diaphragms.

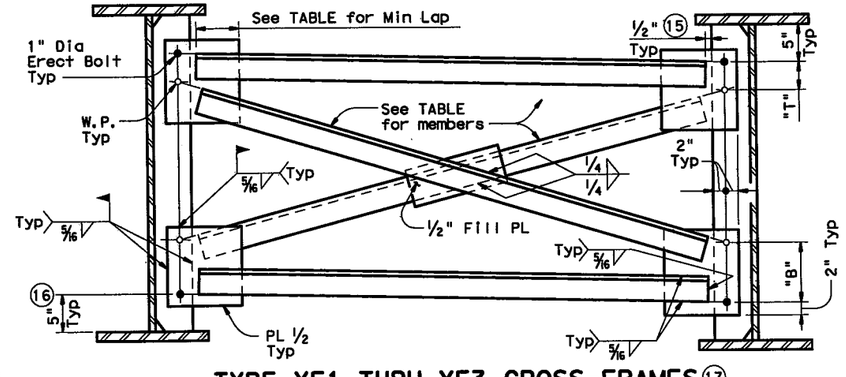

TYPE XF1 THRU XF3 CROSS-FRAMES 17

For Plate Girders with web depths of 52" to 96". For all locations, including end bearings when Thickened Slab Ends, shown on standard SBTS are used. Minimum stiffener width is 8" for use with these cross-frames.

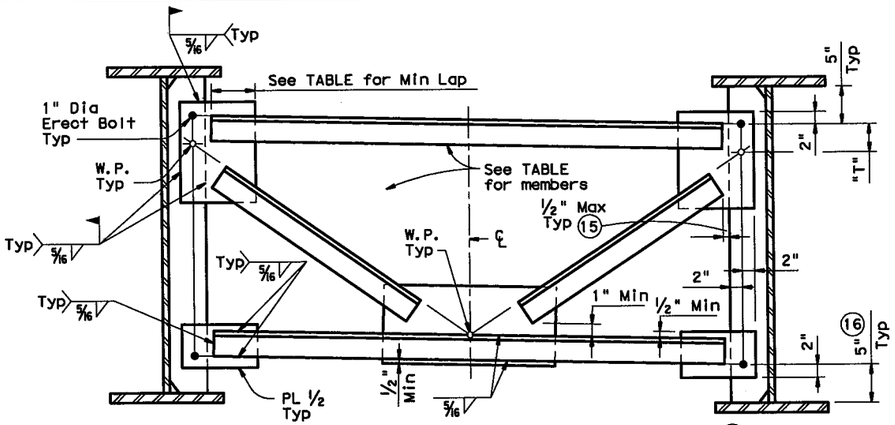

TYPE KF1 THRU KF3 CROSS-FRAMES 17

For Plate Girders with web depths of 52" to 96". For all locations, including end bearings when Thickened Slab Ends, shown on standard SBTS are used. Minimum stiffener width is 8" for use with these cross-frames.

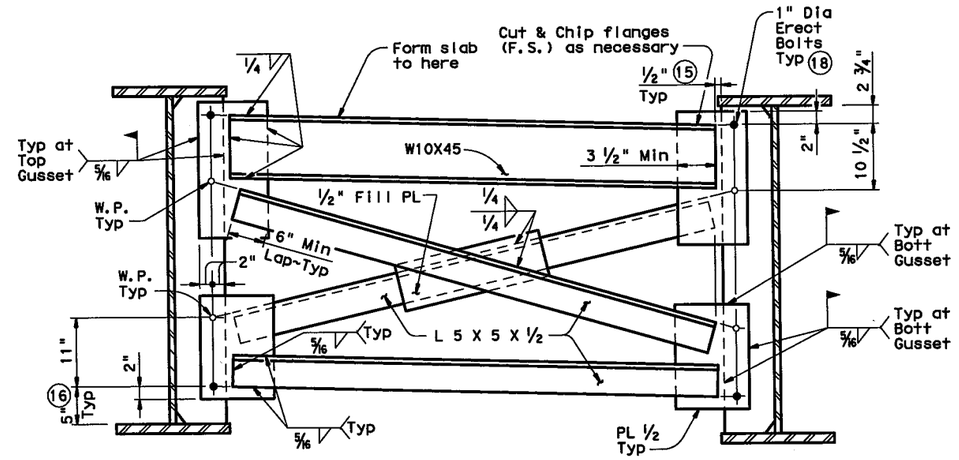

TYPE EF END CROSS-FRAME 17

For Plate Girders with web depths of 52" to 96". Not for use with Thickened Slab Ends, shown on standard SBTS. Minimum stiffener width is 8" for use with this cross-frame.

ANGLE CLIP DETAIL 17

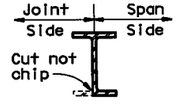

BEAM CUT DETAIL

At end diaphragms and end cross-frames, treat wide flange sections as shown between gusset plates.

(13) For wide flange diaphragm members, cut and chip F.S. of diaphragm as required to clear stiffener/gusset plate.

(14) Center Diaphragm between flanges (+/- 1/2").

(15) Increase as required when gusset plates are bent (end bearing locations with skew over 20°).

(16) At bearings, increase dimension (up to 1"), if necessary, to allow for bearing anchor bolt nut installation.

(17) Clip outstanding leg of all cross-frame angles at 45°; typical each end.

(18) Fully tighten top erection bolts in accordance with Item 447, "Structural Bolting" or seal weld top edge of gusset plate to stiffener to prevent moisture between gusset plate and stiffener.

TYPE D DIAPHRAGM TABLE

Type	Beam Size/ Web Depth, D	Diaphragm Member
D1	W21 & W24	C12 x 20.7
D2	W27 & W30	C15 x 33.9
D3	W33 & W36	MC18 x 42.7
D4	W40	W21 x 44
D5	40" ≤ D < 52"	W27 x 84

TYPE ED DIAPHRAGM TABLE

Type	Beam Size/ Web Depth, D	Diaphragm Member
ED1	W21	W10 x 45
ED2	W24 & W27	W16 x 36
ED3	W30 to W40	W21 x 44
ED4	40" ≤ D < 52"	W27 x 84

TYPE XF AND KF CROSS-FRAME TABLE

Type	Cross-Frame Members	Min Lap at Gussets	"B"	"T"
XF1	L 4 x 4 x 3/8	5"	9"	4 1/2"
XF2	L 5 x 5 x 1/2	6"	11"	5 1/2"
XF3	L 6 x 6 x 9/16	7"	13"	6 1/2"
KF1	L 4 x 4 x 3/8	5"	----	4 1/2"
KF2	L 5 x 5 x 1/2	6"	----	5 1/2"
KF3	L 6 x 6 x 9/16	7"	----	6 1/2"

HL93 LOADING

Texas Department of Transportation
Bridge Division

MISCELLANEOUS DETAILS
STEEL GIRDERS AND BEAMS

SGMD

FILE: spgdstel.dgn	DN: TxDOT	CK: TxDOT	DW: TxDOT	CK: TxDOT
© TxDOT April 2006	DISTRICT	FEDERAL AID PROJECT		SHEET
REVISIONS	FTW	(SEE TITLE SHEET)		1833
	COUNTY	CONTROL	SECT	JOB	HIGHWAY
	TARRANT	14	16	255	IH 35W

LEVELS DISPLAYED
PATH:
1

DISCLAIMER:
The use of this standard is governed by the "Texas Engineering Practice Act". No warranty of any kind is made by TxDOT for any purpose whatsoever. TxDOT assumes no responsibility for the conversion of this standard to other formats or for incorrect results or damages resulting from its use.

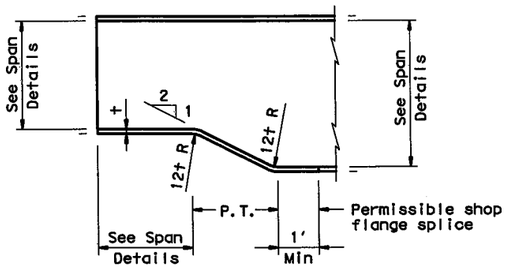

TYPE 1

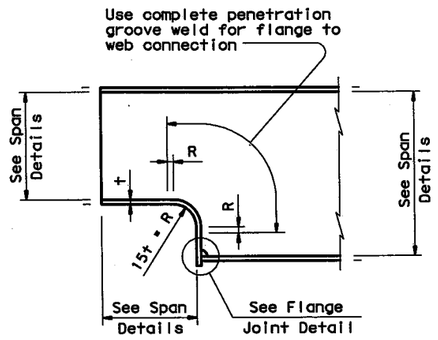

TYPE 2

DAPPED GIRDER END DETAILS

(Plate Girders Only)

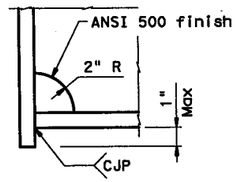

FLANGE JOINT DETAIL

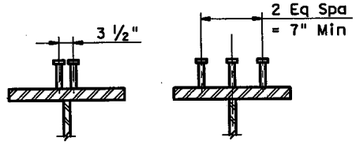

OPTION 1 OPTION 2

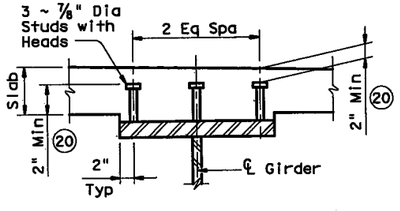

STUD CONNECTOR DETAILS (21)

Weld studs to the flange in accordance with AWS D1.5.

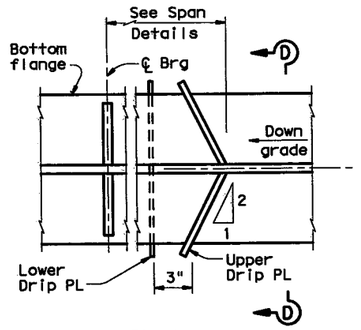

PLAN

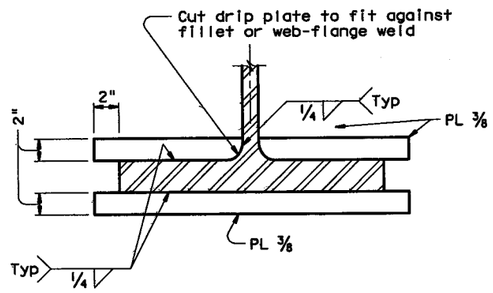

SECTION D-D

DRIP PLATE DETAILS (19)

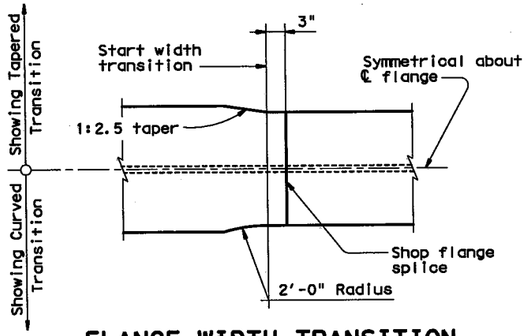

FLANGE WIDTH TRANSITION

See Item 441 "Steel Structures" for requirements regarding straight and curved tapers.

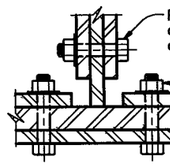

BOLTED SPLICE DETAIL

See Item 447, "Structural Bolting", for washer requirements.

(19) Drip plates (A 709 Gr 50W) are required for all girders in structures to remain unpainted.

(20) The Fabricator is required to provide studs meeting the restrictions shown. Studs must be at least 5" in height.

(21) If Prestressed Concrete Panels are used (straight girders only), use stud spacing shown in either Option 1 or 2. Min allowable clear between studs and panels is 5/8". If Option 1 is used, decrease spacing between rows by 1/3. If this reduced spacing is less than 4", Option 2 must be used. The Contractor is responsible for coordinating necessary adjustment to stud connector placement with panel and steel fabricators.

GENERAL NOTES:

Designed according to AASHTO LRFD Specifications.

These details are intended for use with W21 thru W40 rolled beam spans and I-shaped welded plate girders with a maximum web depth of 96". These details accommodate a maximum c-c beam or girder spacing of 10' (measured perpendicular to girders) and a maximum skew angle of 45 degrees. These details are intended for both straight and curved girders unless noted otherwise.

Shop beam, flange, and web splices must be made with complete penetration groove welds.

See span details for location of tension flanges, diaphragm location and type, cross-frame location and type, stiffener location and sizes, and stud connector spacing.

Unless noted otherwise on the span details, all steel for diaphragms, cross-frames, stiffeners, and gusset plates must meet the requirements of ASTM A 709 Gr 50, Gr 50W, or Gr 50S. If the structure is to remain unpainted, A 709 Gr 50W steel is required.

Erection bolts must meet the requirements of ASTM A 325 or A 490. Unless noted otherwise, erection bolts need not be tightened further than snug tight. Erection bolts are to remain in the finished structure. Use oversize holes and two washers for all erection bolts.

HL93 LOADING SHEET 3 OF 3

Texas Department of Transportation
Bridge Division

MISCELLANEOUS DETAILS
STEEL GIRDERS AND BEAMS

SGMD

FILE: spgdstel.dgn	DN: TxDOT	CK: TxDOT	DW: TxDOT	CK: TxDOT			
©TxDOT April 2006	DISTRICT	FEDERAL AID PROJECT					SHEET
REVISIONS	FTW	(SEE TITLE SHEET)					1834
	COUNTY			CONTROL	SECT	JOB	HIGHWAY
	TARRANT			14	16	255	IH 35W

PATH:
LEVELS DISPLAYED
1

DISCLAIMER:
The use of this standard is governed by the "Texas Engineering Practice Act". No warranty of any kind is made by TxDOT for any purpose whatsoever. TxDOT assumes no responsibility for the conversion of this standard to other formats or for incorrect results or damages resulting from its use.

DATE:
FILE:

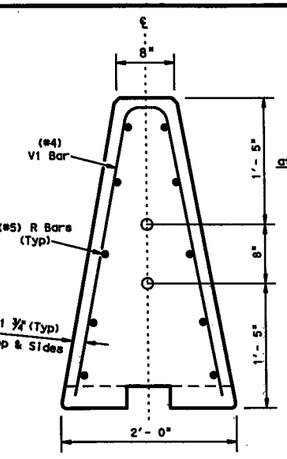

End View
Precast Barrier

Pipe locations for Joint Type X connection

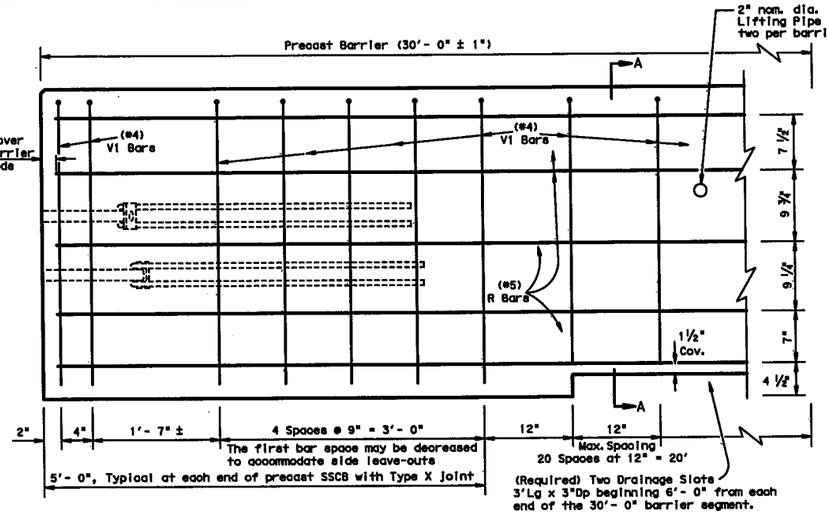

Reinforcement for Precast (SSCB)
Single Slope Concrete Barrier (Type 1)

Showing reinforcement for Joint Connection (Type X)

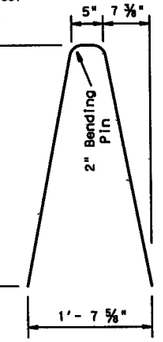

V1 Bar
#4 Rebar

Note:
V1 Bars above the drainage slots may bent to accomadate 1 ½" clear cover as directed by the Engineer.

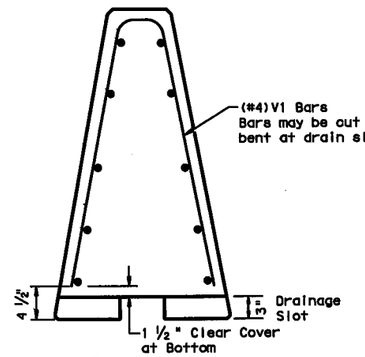

Section A-A
Steel Placement at (Required) Drainage Slots

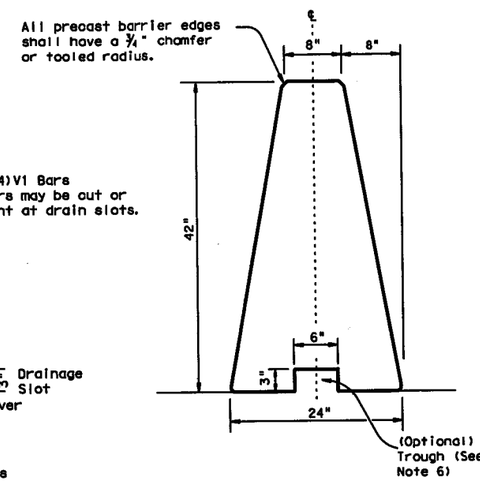

Single Slope Concrete Traffic Barrier

Precast SSCB barrier may be connected to cast-in-place SSBC. The joint connection "Types" may be used in the cast-in-place barrier, to match the precast barrier connection.

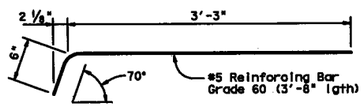

DEFORMED BAR ANCHOR DETAILS

Two (2) Bars required per assembly.
Eight (8) required per Joint.

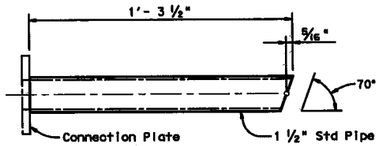

UPPER CONNECTION PIPE DETAILS

One (1) Steel Pipe required per Upper Assembly.
Two (2) required per Joint.

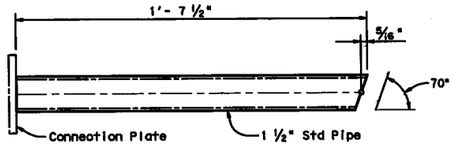

LOWER CONNECTION PIPE DETAILS

One (1) Steel Pipe required per Lower Assembly.
Two (2) required per Joint.

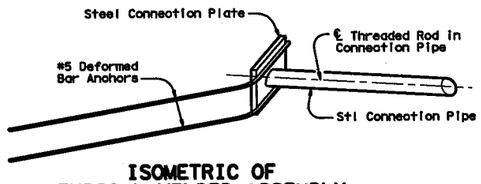

ISOMETRIC OF TYPICAL WELDED ASSEMBLY

Four (4) [2 Upper & 2 Lower] Assemblies required per Joint.

General Notes

1. Concrete shall be Class H with a minimum compressive strength of 3,600 psi.
2. Where used, rebar reinforcement shall be Grade 60 and conform to ASTM A615.
3. Precast barrier length shall be 30 ft. unless otherwise specified on the plans.
4. All precast barrier edges shall have a ¾" chamfer or a tooled radius.
5. All concrete, reinforcement, joint connection systems, grout etc. as shown, are considered as part of the barrier payment.
6. Conduit trough when required shall be shown elsewhere on the plans, or as directed by the Engineer.
7. Regardless of the method of handling, barrier lifting points shall be approx. 7.5 feet from the ends of the barrier. Lifting devices and attachments to barrier sections shall be approved by the Engineer.
8. Surface finishing and grouting (where required) shall be two parts sand one part cement with enough water to make the mixture plastic. Grouting shall be done in a manner that will assure a smooth surface. Surface finishing shall be considered subsidiary to the various bid items.
9. All steel assemblies shall be galvanized after fabrication in accordance with Item 445, "Galvanizing."

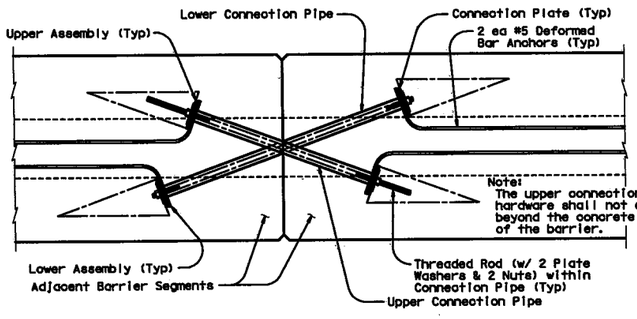

TYPE X JOINT INSTALLATION DETAIL

Barrier reinforcing and Type X Joint Leave-Out dimensions not shown for clarity.

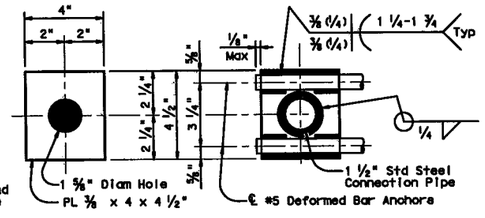

PLATE DIMENSIONS | WELDING DETAILS

CONNECTION PLATE DETAILS

One (1) Plate required per assembly.
Four (4) required per Joint. All steel fittings for Joint Type X shall be galvanized after fabrication in accordance with Item 445.

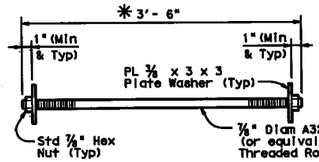

✱ The connection hardware shall not extend beyond the concrete face of the barrier. Hex head bolts may be provided. The proper length of all hardware should be verified.

CONNECTION BOLT OR THREADED ROD DETAIL

Two (2) Threaded Rods (Or Equivalent Hex Hd. Bolts) (w/ Two (2) PL ⅜ x 3 x 3 Plate Washers & Two (2) Std Hex Nuts) required per Joint.

Weight of one precast 30 ft. (SSCB) segment = Approx. 10.5 Tons or 717 lbs per ft.

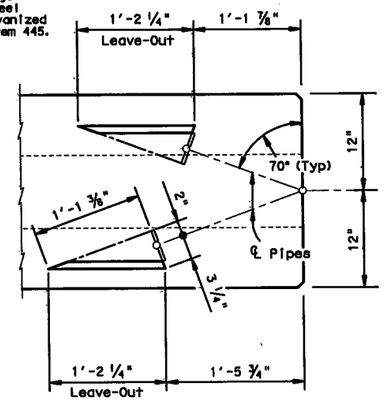

BARRIER PLAN AT JOINT

Welded Wire Reinforcement (WWR) Option for Bars R and V1

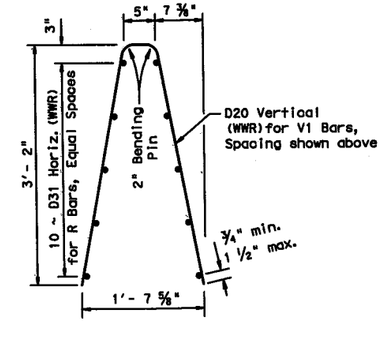

(WWR) General Notes

1. Deformed Welded Wire Reinforcement (WWR) shall conform to ASTM A497.
2. Welded wire cage may be cut or bent to accommodate the Type X joint connection and drainage slots, as directed by the Engineer.
3. All reinforcement shall comply with Item 440, "Reinforcing Steel."
4. Combinations of reinforcing steel and WWR will be permitted, as directed by the Engineer. The dimension from the end of the barrier section to the first wire shall not exceed 3".

SHEET 1 OF 2

Texas Department of Transportation
Design Division Standard

SINGLE SLOPE CONCRETE BARRIER

PRECAST BARRIER (TYPE 1)

SSCB(2)-10

FILE: sscb210.dgn	DN: TxDOT	CK: AM	DW: BD	CK:
©TxDOT December 2010	CONT	SECT	JOB	HIGHWAY
REVISIONS	0014	16	255	IH 35W
	DIST	COUNTY		SHEET NO.
	FTW	TARRANT		1835

DISCLAIMER:
The use of this standard is governed by the "Texas Engineering Practice Act". No warranty of any kind is made by TxDOT for any purpose whatsoever. TxDOT assumes no responsibility for the conversion of this standard to other formats or for incorrect results or damages resulting from its use.

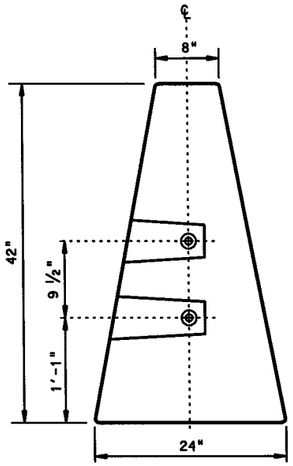

END VIEW
"QUICK-BOLT" POCKET LOCATIONS

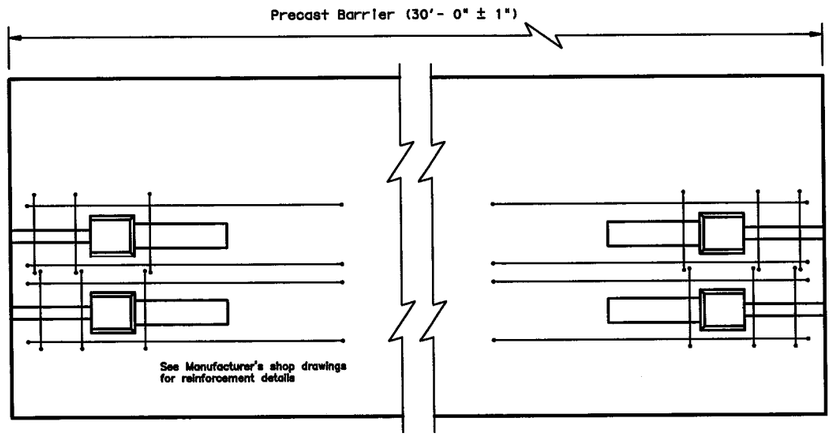

ELEVATION VIEW
"QUICK-BOLT" (SSCB)
See Manufacturer's shop drawing for additional details

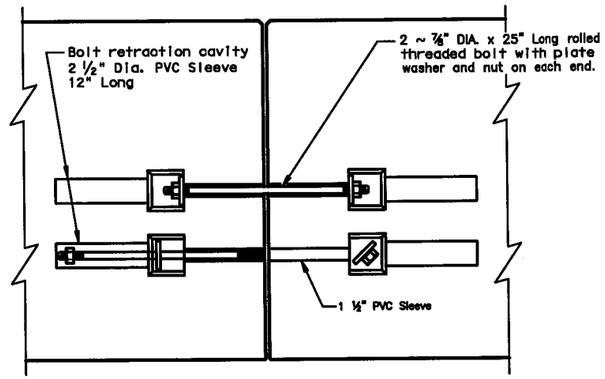

ELEVATION VIEW SHOWING JOINT CONNECTION
"QUICK-BOLT"

Joint Connection (Type Q)

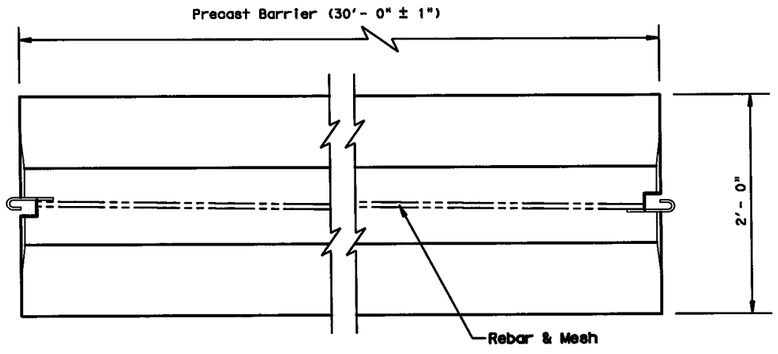

TOP VIEW
PRECAST (SSCB) WITH J-J HOOKS
See Manufacturer's shop drawing for additional details

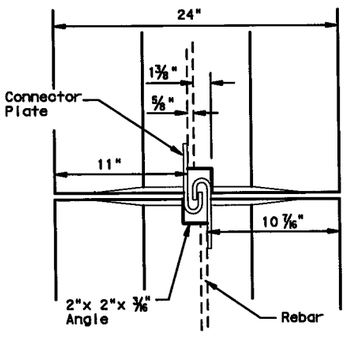

VIEW FROM ABOVE
J-J HOOK CONNECTION

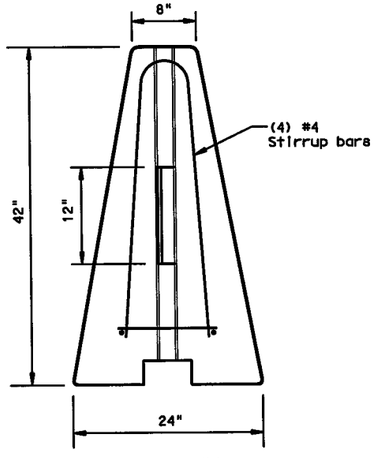

END VIEW

Proprietary Joint Connections (SSCB)

Two proprietary joint connections are acceptable as alternates to the (Type X) connection shown, here on. These joint connections types are:

J-J Hooks by Easi-Set Industries, (800)547-4045
Quick-Bolt by Bexar Concrete, (210)497-3773

If one of these connection systems are exclusively specified in the plans, prior approval for sole source use must be obtained. Details of the connection components and barrier reinforcement for these systems, will be shown on the manufacturer's shop drawing(s) furnished to the Engineer.

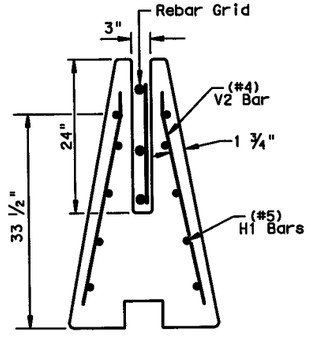

SECTION A-A
Showing (Type R) Rebar Grid

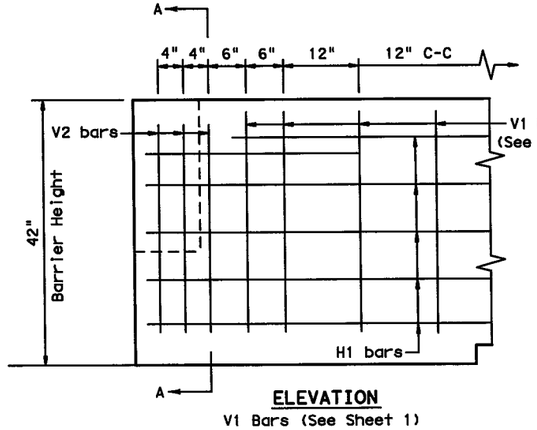

ELEVATION
V1 Bars (See Sheet 1)

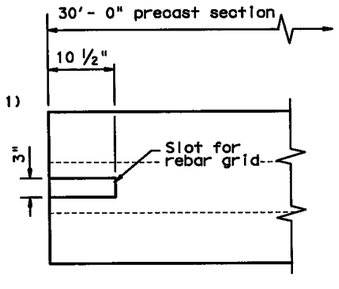

TOP VIEW
JOINT CONNECTION
Typical at both ends of barrier segment

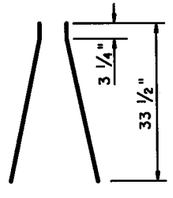

(#4) V2 BARS
6 ~ two piece bars per barrier segment

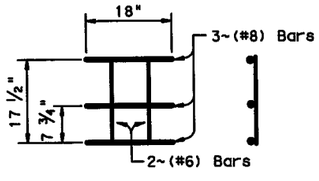

WELDED REBAR GRID

Joint Connection (Type R)

SHEET 2 OF 2

Texas Department of Transportation
Design Division Standard

SINGLE SLOPE CONCRETE BARRIER

PRECAST BARRIER
(TYPE 1)

SSCB(2)-10

FILE: sscb210.dgn	DN: TxDOT	CK: AM	DW: BD	CK:
©TxDOT December 2010	CONT	SECT	JOB	HIGHWAY
REVISIONS	0014	16	255	IH 35W
	DIST	COUNTY		SHEET NO.
	FTW	TARRANT		1836

DATE:
FILE:

DISCLAIMER:
The use of this standard is governed by the "Texas Engineering Practice Act". No warranty of any kind is made by TxDOT for any purpose whatsoever. TxDOT assumes no responsibility for the conversion of this standard to other formats or for incorrect results or damages resulting from its use.

PATH:

LEVELS DISPLAYED

1

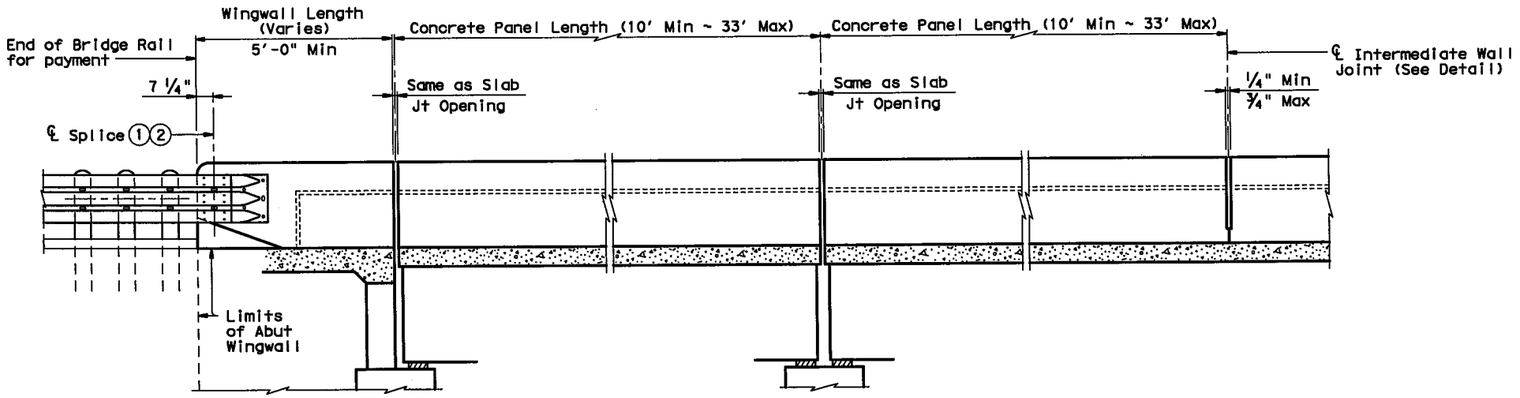

AT ABUTMENT BENTS
Showing TL-3 Transition

AT SLAB EXP JOINTS
ROADWAY ELEVATION OF RAIL

AT INTERMEDIATE WALL JOINTS

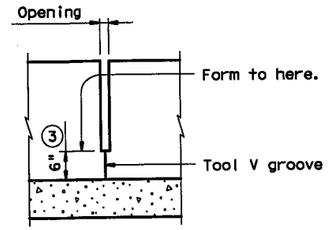

INTERMEDIATE WALL JOINT DETAIL

Provide at all interior bents without slab expansion joints. Space equally in between at 33' Max, 10' Min.

℄ 4 ~ 7/8" Dia A325 Bolts with two 1 3/4" O.D. washers. Place washer under each head and nut. The 4 Terminal Connection Bolts must be tightened in a well distributed pattern so to prevent damage or distortion of the W-Beam Connection and the MBGF Transition. Bolts must be cut off after installation so as to extend no more than 3/4" beyond nut. End of cut-off bolt must be painted with Zinc-rich paint. 2

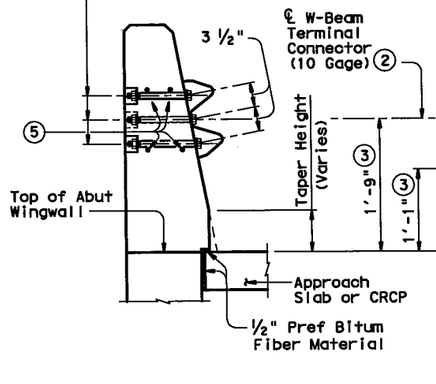

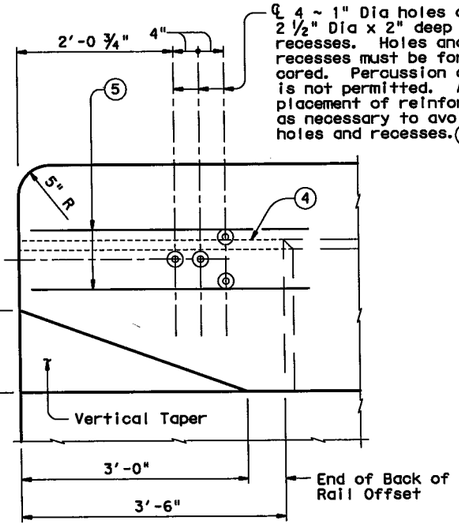

℄ 4 ~ 1" Dia holes and 2 1/2" Dia x 2" deep recesses. Holes and recesses must be formed or cored. Percussion drilling is not permitted. Adjust placement of reinforcing steel as necessary to avoid bolt holes and recesses. 6

SECTION ELEVATION

TL-2 TERMINAL CONNECTION DETAILS

℄ 5 ~ 7/8" Dia A325 Bolts with two 1 3/4" O.D. washers. Place washer under each head and nut. The 5 Terminal Connection Bolts must be tightened in a well distributed pattern so to prevent damage or distortion of the Thrie-Beam Connection and the MBGF Transition. Bolts must be cut off after installation so as to extend no more than 3/4" beyond nut. End of cut-off bolt must be painted with Zinc-rich paint. 2

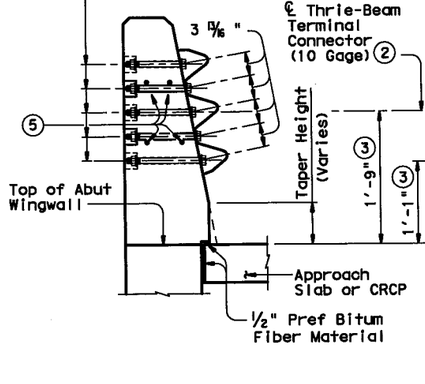

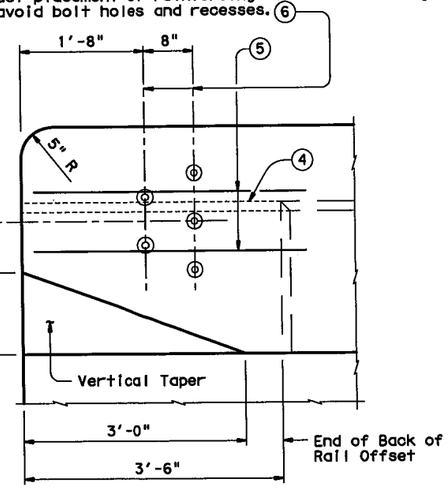

℄ 5 ~ 1" Dia holes and 2 1/2" Dia x 2" deep recesses. Holes and recesses must be formed or cored. Percussion drilling is not permitted. Adjust placement of reinforcing steel as necessary to avoid bolt holes and recesses. 6

SECTION ELEVATION

TL-3 TERMINAL CONNECTION DETAILS

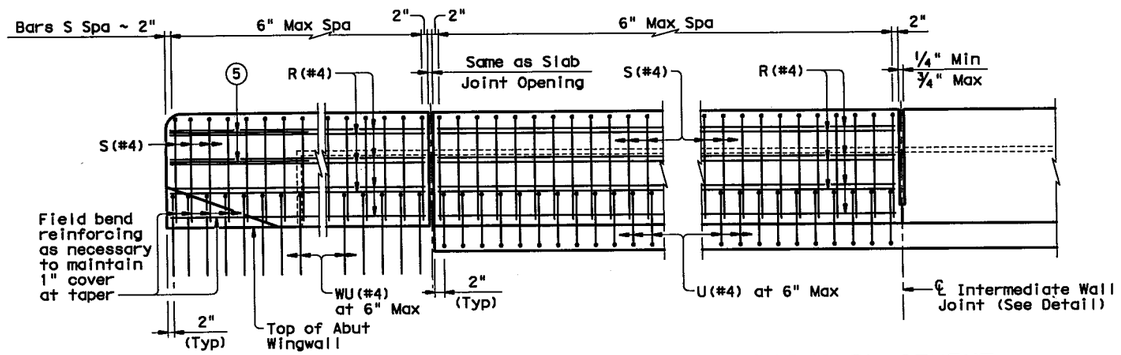

ELEVATION SHOWING TYPICAL REINFORCING PLACEMENT

1. Metal Beam Guard Fence Transitions must be attached to the bridge rail and extended along the embankment unless otherwise shown in the plans.
2. Terminal Connectors and associated hardware are to be paid for under the Item "Metal Beam Guard Fence".
3. Increase 2" for structures with Overlay.
4. Back of rail offset may, with Engineer's approval be continued to the end of the railing.
5. 4 additional Bars R(#4) 3'-8" in length must be placed inside Bars S(#4) and centered 2'-0" from end of rail when Terminal Connections are required.
6. Bolt recesses are only required when pedestrian sidewalks are adjacent to back of rail.

SHEET 1 OF 2

Texas Department of Transportation
Bridge Division

TRAFFIC RAIL SINGLE SLOPE

TYPE SSTR

FILE: rlstd014.dgn	DN: TxDOT	CK: TxDOT	DW: JTR	CK: TxDOT
©TxDOT April 2009	DISTRICT	FEDERAL AID PROJECT		SHEET
REVISIONS	FTW	(SEE TITLE SHEET)		1837
05-11: Gen Notes; Wall Joint Note.	COUNTY	CONTROL	SECT	JOB	HIGHWAY
	TARRANT	14	16	255	IH 35W

DISCLAIMER:
The use of this standard is governed by the "Texas Engineering Practice Act". No warranty of any kind is made by TxDOT for any purpose whatsoever. TxDOT assumes no responsibility for the conversion of this standard to other formats or for incorrect results or damages resulting from its use.

PATH:

LEVELS DISPLAYED

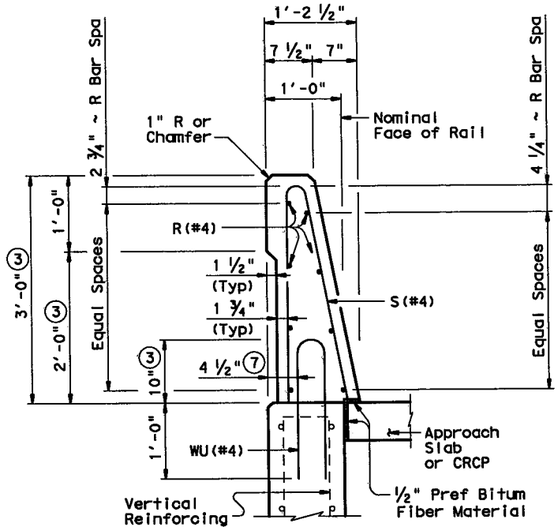

ON ABUTMENT WINGWALLS OR CIP RETAINING WALLS

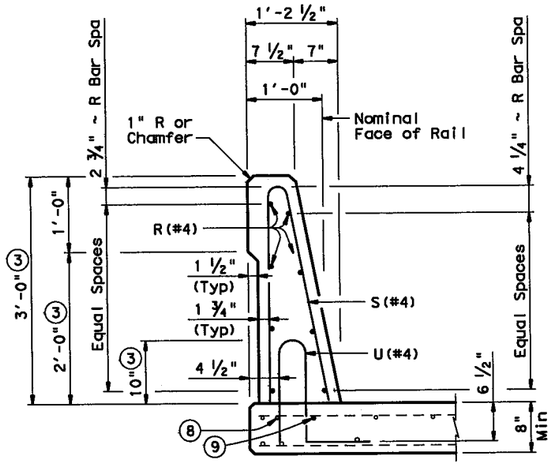

ON BRIDGE SLAB

SECTIONS THRU RAIL

(3) Increase 2" for structures with Overlay.

(7) 5 ½" when vertical reinforcing has closer clear cover over horizontal reinforcing in abutment wingwalls or retaining walls on traffic side of wall.

(8) As an aid in supporting reinforcement, additional longitudinal bars may be used in the slab with the approval of the Engineer. Such bars must be furnished at the Contractors expense.

(9) Top longitudinal slab bar may be adjusted laterally 3" plus or minus to tie reinforcing.

(10) No longitudinal wires may be within upper bend.

(11) Bend or cut as required to clear drain slots.

(12) Space U(#4) bars at 4" Max when end region of panel length is less than 6'-0" to side slot drain. Space U(#4) bars at 6" Max when end region of panel length is 6'-0" and greator to side slot drain.

CONSTRUCTION NOTES:

This railing may be constructed with slip-forms when approved by the Engineer, with equipment approved by the Engineer. Sensor control for both line and grade must be provided. Tack welding to provide bracing for slip-form operations is acceptable. Welding can be performed at a minimum spacing of 3 ft between the cage and the anchorage. It is permissible to weld to U, WU and S bars at any location on the cage. If increased bracing is needed, additional anchorage devices must be added and welding must be performed in the upper two thirds of the cage.

The back of railing must be vertical unless otherwise shown in the plans or approved by the Engineer.

MATERIAL NOTES:

All steel components except reinforcing must be galvanized unless otherwise shown in plans.

Use Class "C" concrete. Use Class "C" (HPC) if required elsewhere.

All reinforcing steel must be grade 60.

Epoxy coat all rail reinforcement if slab bars are epoxy coated.

Deformed welded wire reinforcement (WWR) may be used as an option to conventional reinforcement and must be made in accordance with ASTM A497 (Deformed Wire). Combinations of Reinforcing Steel and WWR or configurations of WWR other than shown will be permitted when the conditions in the table are satisfied.

GENERAL NOTES:

This rail has been successfully evaluated by full-scale crash test to meet MASH TL-4 criteria. This rail can be used for design speeds of 50 mph and greater when a TL-3 rated guard fence transition is used. When a TL-2 rated guard fence transition is used, this rail can only be used for design speeds of 45 mph and less.

This railing cannot be used on bridges with expansion joints providing more than 5" movement.

Rail anchorage details shown on this standard may require modification for select structure types. See appropriate details elsewhere in plans for these modifications.

Shop drawings will not be required for this rail.

Average weight of railing with no overlay is 376 plf.

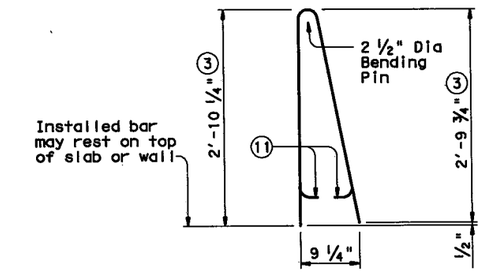

BARS S (#4)

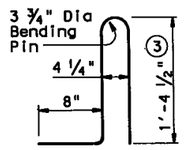

BARS U (#4)

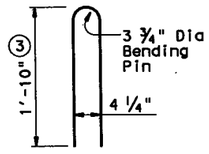

BARS WU (#4)

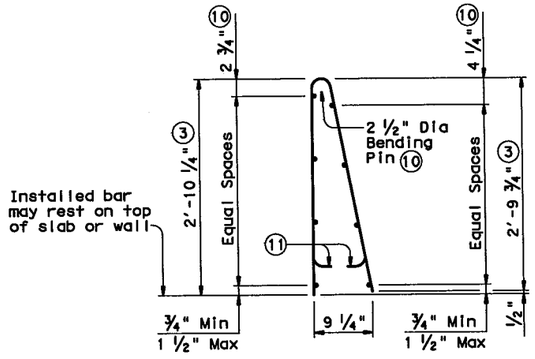

OPTIONAL WELDED WIRE REINFORCEMENT (WWR)

DESCRIPTION	LONGITUDINAL WIRES	VERTICAL WIRES
Minimum (Cumulative Total) Wire Area	1.067 Sq In.	0.267 Sq In. per Ft
	No. of Wires	Spacing
Minimum	8	4"
Maximum	10	8"
Maximum Wire Size Differential	The smaller wire must have an area of 40% or more of the larger wire.	

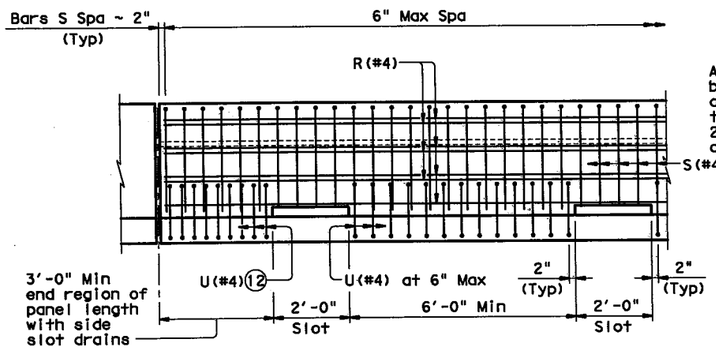

OPTIONAL SIDE SLOT DRAIN DETAIL

Note: Side Slot Drains may be used where shown elsewhere on the plans or as directed by the Engineer. Drains should not be placed over railroad tracks, lower roadways, or sidewalks. When this rail is used as a separator between a roadway surface and a sidewalk surface, side drain slots will not be permitted.

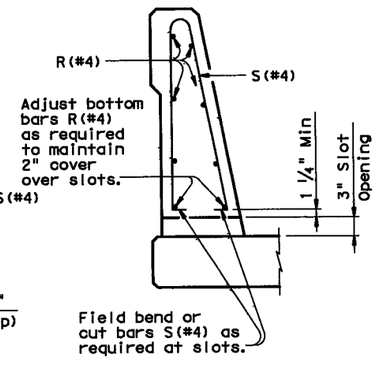

SECTION THRU OPTIONAL SIDE SLOT DRAIN

SHEET 2 OF 2

Texas Department of Transportation
Bridge Division

TRAFFIC RAIL SINGLE SLOPE

TYPE SSTR

FILE: rlstd014.dgn	DN: TxDOT	CK: TxDOT	DW: JTR	CK: TxDOT		
©TxDOT April 2009	DISTRICT	FEDERAL AID PROJECT				SHEET
REVISIONS	FTW	(SEE TITLE SHEET)				1838
05-11: Gen Notes; Wall Joint Note.	COUNTY		CONTROL	SECT	JOB	HIGHWAY
	TARRANT		14	16	255	IH 35W

DISCLAIMER:
The use of this standard is governed by the "Texas Engineering Practice Act". No warranty of any kind is made by TxDOT for any purpose whatsoever. TxDOT assumes no responsibility for the conversion of this standard to other formats or for incorrect results or damages resulting from its use.

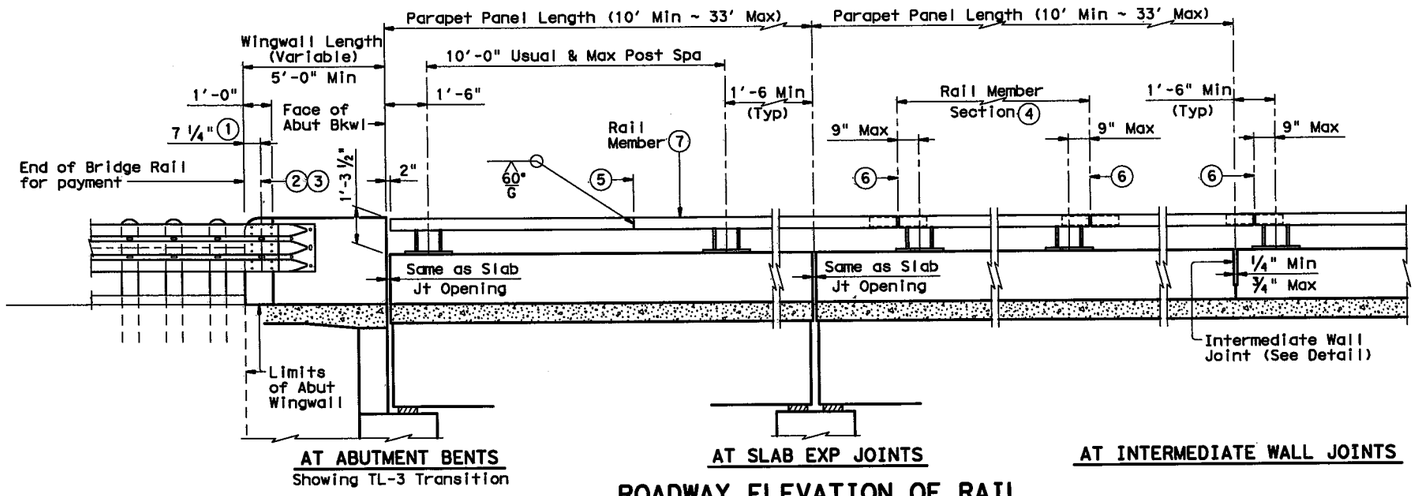

ROADWAY ELEVATION OF RAIL

(Rail Member showing Elliptical Tube Option, Rectangular Tube Option similar).

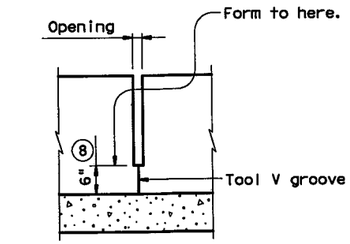

INTERMEDIATE WALL JOINT DETAIL

Provide at all interior bents without slab expansion joints. Space equally in between at 33' Max, 10' Min. Location independent of rail member splices.

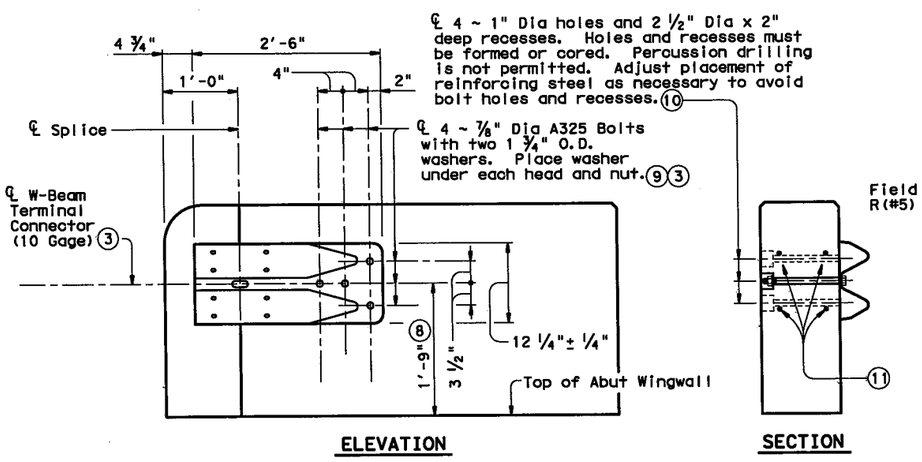

TL-2 TERMINAL CONNECTION DETAILS

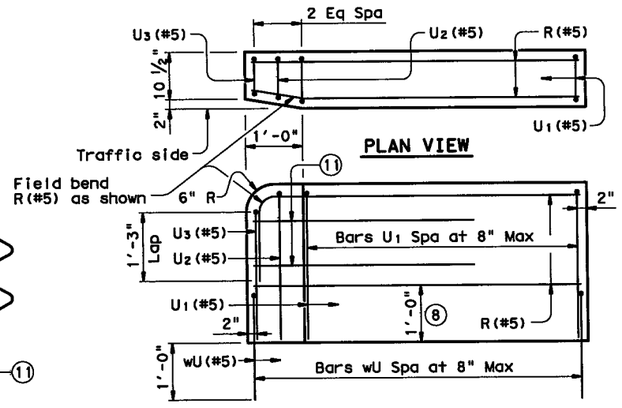

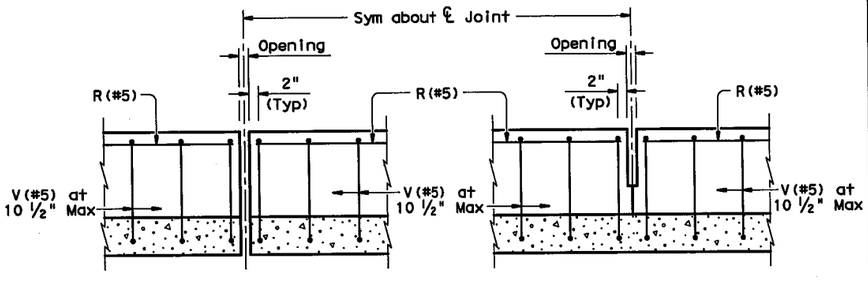

ELEVATION SHOWING TYPICAL REINFORCING PLACEMENT

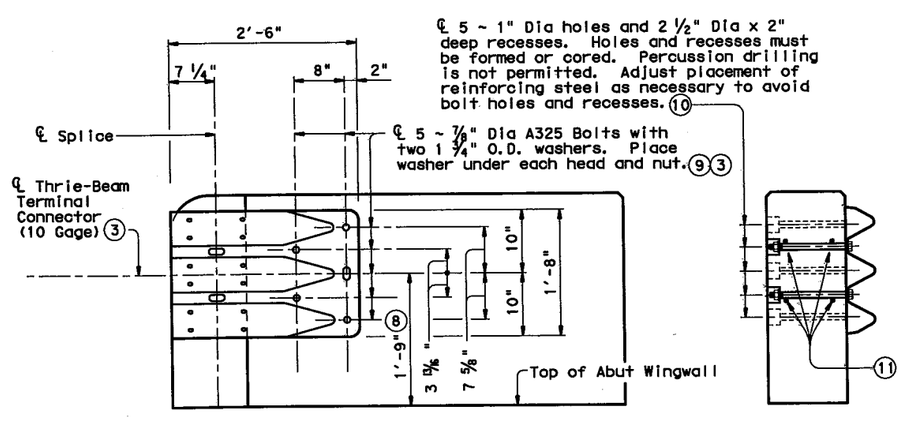

TL-3 TERMINAL CONNECTION DETAILS

(1) Showing TL-3 Splice location, TL-2 Splice location is 1'-0".

(2) ℄ Splice ~ Metal Beam Guard Fence Transitions must be attached to the bridge rail and extended along the embankment unless otherwise shown in the plans.

(3) Terminal Connectors and associated hardware are to be paid for under the Item "Metal Beam Guard Fence".

(4) Rail member sections must have at least two posts but not more than four.

(5) One shop splice per rail member section is permitted with minimum 85 percent penetration. The weld may be square groove or single vee groove. Grind smooth.

(6) ℄ Exp Jt or Splice Jt as required.

(7) Unless directed otherwise by the Engineer, the fabricator may use the rectangular tube in lieu of the elliptical tube for the rail member.

(8) Increase 2" for structures with overlay.

(9) Bolts must be of sufficient length to extend 1/2" to 3/4" beyond nut.

(10) Bolt recesses are only required when pedestrian sidewalks are adjacent to back of rail.

(11) 4 additional Bars R(#5) 3'-8" in length must be placed inside Bars U(#5) and centered 2'-0" from end of rail when Terminal Connections are required. Field bend as needed.

ACC:
LEVELS DISPLAYED

SHEET 1 OF 3

Texas Department of Transportation
Bridge Division

TRAFFIC RAIL

TYPE T401

FILE: rlstd006.dgn	DN: TxDOT	CK: TxDOT	DW: JTR	CK: JMH
©TxDOT April 2009	DISTRICT	FEDERAL AID PROJECT		SHEET
REVISIONS	FTW	(SEE TITLE SHEET)		1839
05-11: Notes and Wall Joint Note.	COUNTY	CONTROL	SECT	JOB	HIGHWAY
	TARRANT	14	16	255	IH 35W

DISCLAIMER:
The use of this standard is governed by the "Texas Engineering Practice Act". No warranty of any kind is made by TxDOT for any purpose whatsoever. TxDOT assumes no responsibility for the conversion of this standard to other formats or for incorrect results or damages resulting from its use.

ACC:

LEVELS DISPLAYED

1

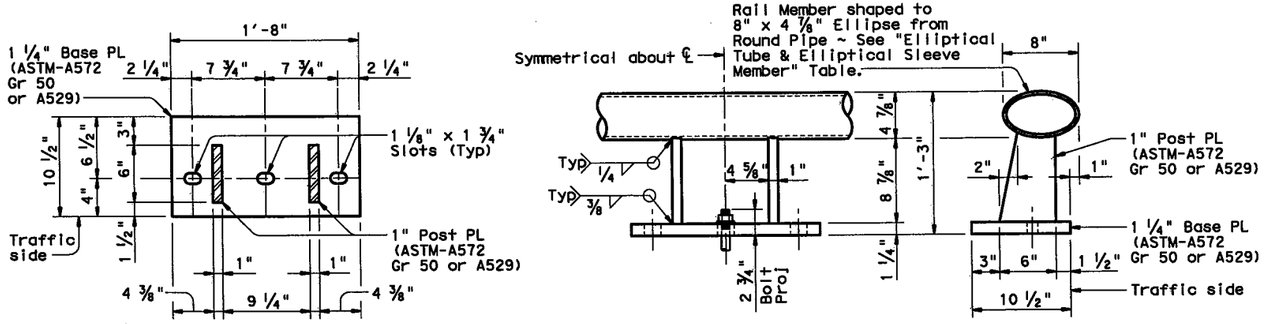

SECTION THRU POST | ELEVATION | SECTION THRU RAIL

ELLIPTICAL TUBE WITH RAIL POST & ANCHORAGE DETAILS

(Showing Elliptical Tube Option)

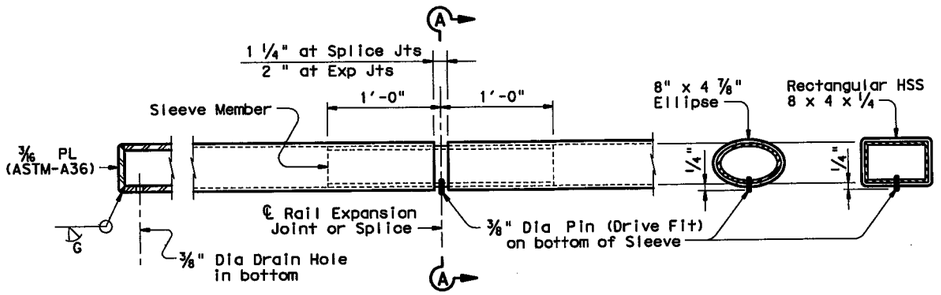

AT RAIL ENDS | AT SPLICE OR EXP JTS | SECTION A-A (Showing Ellipse Tube Option) | SECTION A-A (Showing Rectangular Tube Option)

TUBE FABRICATION DETAILS ⑦

ELLIPTICAL TUBE & ELLIPTICAL SLEEVE MEMBER		
8" x 4 7/8" Ellipse	Elliptical Sleeve Member	
Material	Material	Thickness
6" Dia Std Pipe ASTM-A53 E or S Gr B)	ASTM-A53 Gr B	0.353"
	A36 or A500 Gr B	0.339"
	API-5LX52	0.224"
6 5/8" O.D. Pipe x 0.188" API-5LX52	ASTM-A53 Gr B	0.339"
	A36 or A500 Gr B	0.325"
	API-5LX52	0.188"

Notes: Other sections of equal or greater strength are acceptable for elliptical sleeves. The major and minor diameters of the rail member may vary +/- 0.1875" from plan dimension. However, the difference between the outside diameters of the elliptical sleeve and the inside diameters of the rail member must not exceed 0.25 inches.

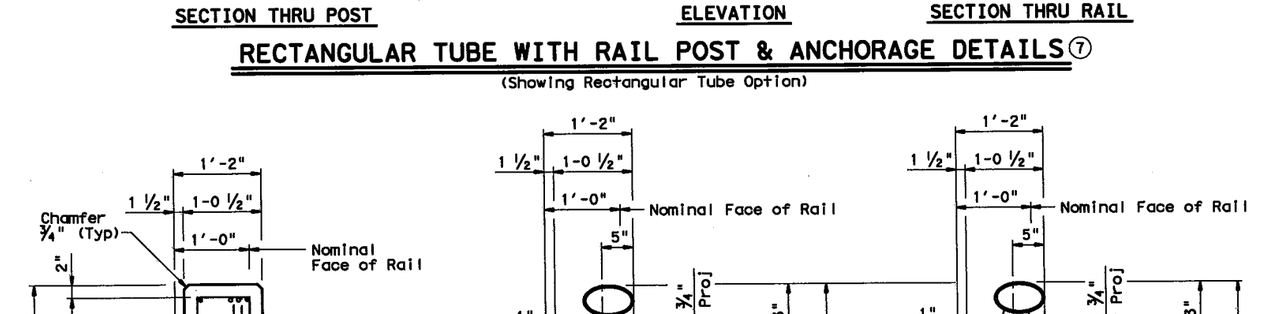

SECTION THRU POST | ELEVATION | SECTION THRU RAIL

RECTANGULAR TUBE WITH RAIL POST & ANCHORAGE DETAILS ⑦

(Showing Rectangular Tube Option)

⑦ Unless directed otherwise by the Engineer, the fabricator may use the rectangular tube in lieu of the elliptical tube for the rail member.

⑧ Increase 2" for structures with overlay.

⑫ 5 1/2" when vertical reinforcing has closer clear cover over horizontal reinforcing in abutment wingwalls or retaining walls on traffic side of wall.

⑬ See "Material Notes" for anchor bolt information.

⑭ Top longitudinal slab bar may be adjusted laterally 3" plus or minus to tie reinforcing.

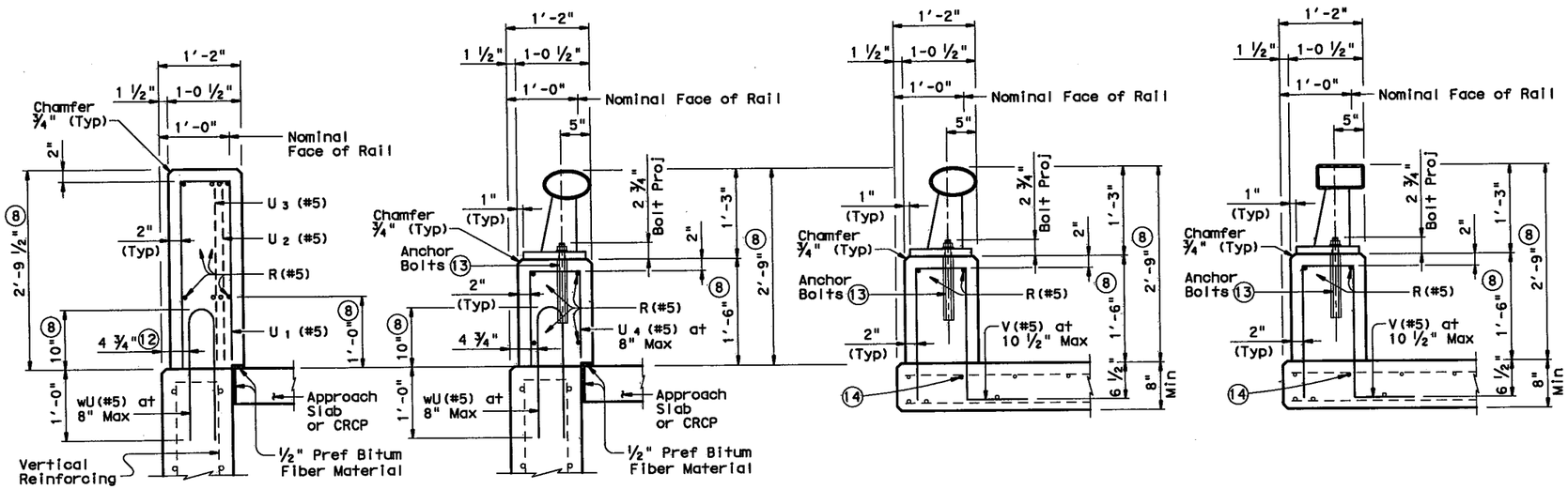

ON ABUTMENT WINGWALLS OR CIP RETAINING WALLS | ON CIP RETAINING WALLS (Showing Elliptical Tube Option) | ON BRIDGE SLAB (Showing Elliptical Tube Option) | ON BRIDGE SLAB (Showing Rectangular Tube Option)

SECTIONS THRU RAIL ⑦

SHEET 2 OF 3

Texas Department of Transportation
Bridge Division

TRAFFIC RAIL

TYPE T401

FILE: ristd006.dgn	DN: TxDOT	CK: TxDOT	DW: JTR	CK: JMH	
©TxDOT April 2009	DISTRICT	FEDERAL AID PROJECT			SHEET
REVISIONS	FTW	(SEE TITLE SHEET)			1840
05-11: Notes and Wall Joint Note.	COUNTY		CONTROL	SECT	JOB	HIGHWAY
	TARRANT		14	16	255	IH 35W

DISCLAIMER:
The use of this standard is governed by the "Texas Engineering Practice Act". No warranty of any kind is made by TxDOT for any purpose whatsoever. TxDOT assumes no responsibility for the conversion of this standard to other formats or for incorrect results or damages resulting from its use.

ACC:

LEVELS DISPLAYED

1

(8) Increase 2" for structures with overlay.

(13) See "Material Notes" for anchor bolt information.

(15) Slots are not allowed in areas where there is a joint in the concrete parapet between rail post.

(16) Length shown for 6 ½" Min bar embedment with no overlay. Adjust as required.

(17) Shop drawings for approval required for tubular steel sections.

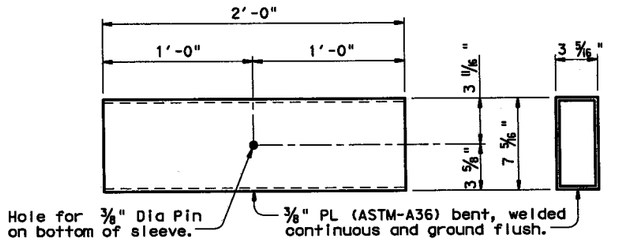

PLAN END VIEW

RECTANGULAR TUBE SLEEVE MEMBER DETAIL

(See Tube Fabrication Detail)

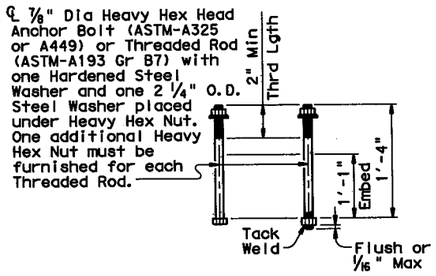

CAST-IN-PLACE (13) ANCHOR BOLT OPTIONS

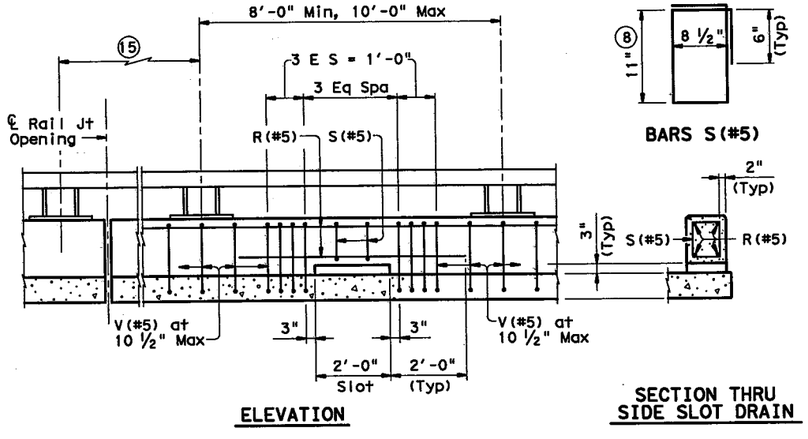

ELEVATION SECTION THRU SIDE SLOT DRAIN

OPTIONAL SIDE SLOT DRAIN DETAILS

Note: Side Slot Drains must be centered between rail posts within the limits shown. Side Slot Drains may be used where shown elsewhere on the plans or as directed by the Engineer. Drains should not be placed over railroad tracks, lower roadways, or sidewalks. When this rail is used as a separator between a roadway surface and a sidewalk surface, side drain slots will not be permitted.

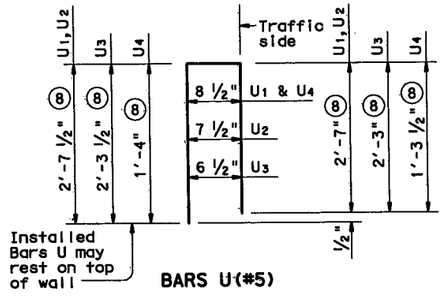

BARS U(#5)

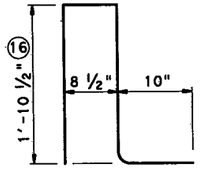

BARS V(#5)

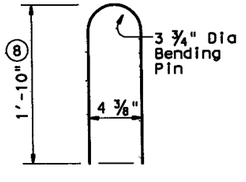

BARS wU(#5)

RAIL DATA FOR HORIZONTAL CURVES

	RADIUS TO FACE OF RAIL	MAX CHORD LENGTH	CONSTRUCT OR FABRICATE
Rail Members	Over 2800'	29'-0"	Straight rail sections
	Over 1400' thru 2800'	14'-6"	To required radius (17) or to chords shown (17)
	Over 700' thru 1400'	7'-3"	
	Thru 700'	Zero	To required radius (17)

CONSTRUCTION NOTES:

This rail may be slip-formed if approved by the Engineer when epoxy adhesive anchor bolts are used.

Cap all open ends of tubular steel sections.

At the contractor's option anchor bolts may be cast with the parapet (See Cast-in-Place Anchor Bolt Options).

Slip-forming parapet is not allowed if anchor bolts are cast with parapet wall.

Rail parapet must be plumb unless otherwise approved by the Engineer. Steel posts must be square to the top of parapet. Use epoxy mortar under post base plates if gaps larger than 1/16" exist.

Rail member sections must have at least two posts but not more than four.

Round or chamfer all exposed edges of steel components 1/16" by grinding prior to galvanizing.

MATERIAL NOTES:

Galvanize all steel components except reinforcing steel.

Anchor bolts must be 7/8" Dia ASTM A193 Grade B7 fully threaded rods with heavy hex nuts, one hardened washer and one (2 1/4" OD) washer each. Embed threaded rods into parapet wall with a Type III Class C epoxy anchorage system. Minimum embedment depth is 8". Anchorage system chosen must be able to achieve an ultimate tensile resistance of 34 kips per bolt. The Contractor must provide evidence to the Engineer that this can be achieved. Evidence of adequate tensile resistance can be based on the manufacturer's published values of ultimate tensile strength (anchor spacing and edge distance must be accounted for). Anchor installation, including hole size, drilling, and clean-out, must be in accordance with the manufacturer's instructions.

Optional cast-in-place anchor bolts must be 7/8" Dia ASTM A325 or A449 bolts (or A193 Gr B7 threaded rods with one tack welded heavy hex nut each) with one heavy hex nut and one hardened steel washer plus one 2 1/4" O.D. steel washer at each bolt. Nuts must conform to A563 requirements.

Use Class "C" concrete. Use Class "C" (HPC) if required elsewhere. Chamfer all exposed corners.

Reinforcing steel must be Grade 60.

Epoxy coat all rail reinforcement if slab bars are epoxy coated.

GENERAL NOTES:

This rail has been evaluated to be of equal strength to the T4 (A) railing, which has been crash tested to meet NCHRP Report 350 TL-3 criteria. This rail can be used for design speeds of 50 mph and greater when a TL-3 rated guard fence transition is used. When a TL-2 rated guard fence transition is used, this rail can only be used for design speeds of 45 mph and less.

This railing cannot be used on bridges with expansion joints providing more than 5" movement.

Rail anchorage details shown on this standard may require modification for select structure types. See appropriate details elsewhere in plans for these modifications.

Erection drawings showing panel lengths, rail post spacing, and anchor bolt setting must be submitted to the Engineer for approval.

Average weight of railing with no overlay: 263 plf total
234 plf (Conc)
29 plf (Steel).

SHEET 3 OF 3

Texas Department of Transportation
Bridge Division

TRAFFIC RAIL

TYPE T401

FILE: ristd006.dgn	DN: TxDOT	CK: TxDOT	DW: JTR	CK: JMH			
©TxDOT April 2009	DISTRICT	FEDERAL AID PROJECT					SHEET
REVISIONS	FTW	(SEE TITLE SHEET)					1841
05-11: Notes and Wall Joint Note.	COUNTY			CONTROL	SECT	JOB	HIGHWAY
	TARRANT			14	16	255	IH 35W